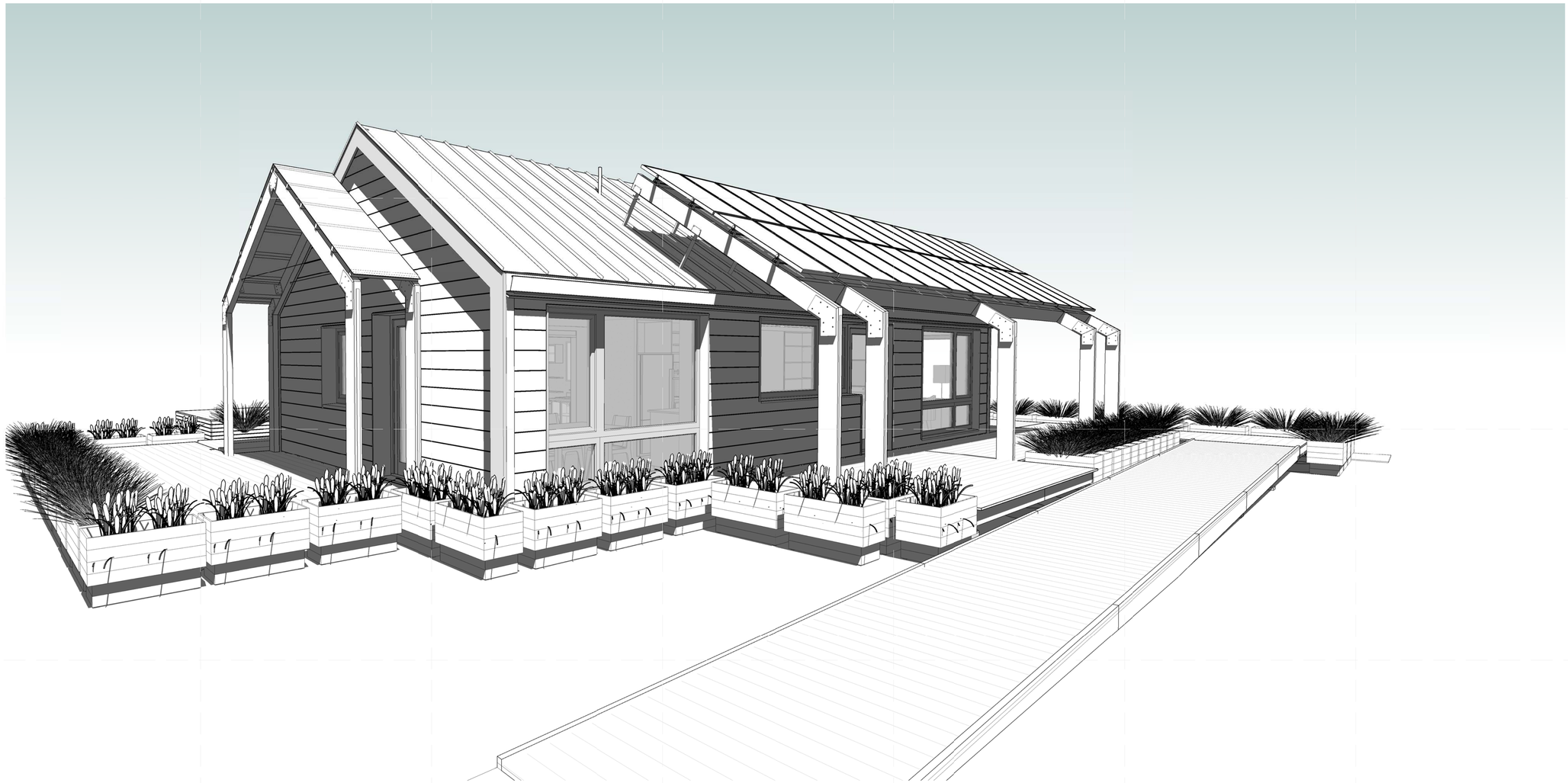

TEAM MASSACHUSETTS

SOLAR DECATHLON

CONSTRUCTION DOCUMENTS

TEAM NAME:	TEAM MASSACHUSETTS
ADDRESS:	MASSART 621 HUNTINGTON AVE. BOSTON MA 02115
CONTACT:	SPENCER CULHANE 602.677.6388 SPENCER.CULHANE@4DHOME.US WWW.4DHOME.US

CONSULTANTS

EPOCH HOMES

PASSIVE HOUSE INSTITUTE US

SLADEN FEINSTEIN INTEGRATED LIGHTING

LEMESSURIER CONSULTANTS, STRUCTURAL ENGINEERS

CLIENT

U.S. DEPARTMENT OF ENERGY

SOLAR DECATHLON 2011

WWW.SOLARDECATHLON.GOV

MARK	DATE	DESCRIPTION

LOT NUMBER:	NA
DRAWN BY:	SC_FL_EC
CHECKED BY:	PH
COPYRIGHT:	NONE: PROJECT IS PUBLIC DOMAIN

SHEET TITLE

COVER PAGE

G-001

8/12/2011 8:51:15 PM

SYMBOL LEGEND

MARK	DESCRIPTION
ROOM NAME 150 SF	AREA TAG
1 A101 SIM	CALL OUT TAG
101	DOOR TAG
0	STRUCTURAL GRID TAG
12 21 31.A2	REFERENCE KEYNOTE TAG
NAME ELEVATION	ELEVATION MARKER
	NORTH ARROW
ROOM NAME 101	ROOM TAG
A4 A101	SECTION TAG
1 Ref 1 Ref 1 Ref 1 Ref A101	INTERIOR ELEVATION TAG
1 A101	EXTERIOR ELEVATION TAG
	SPOT ELEVATION
1L	WALL TAG
1T	WINDOW TAG
7	SHEET KEYNOTE TAG
0 2' 4' 8'	GRAPHIC SCALE
1 View Name 1/8" = 1'-0"	VIEW TITLE

SHEET INDEX

A-533	WINDOW SILLS
A-535	Unnamed
F-713	FIRE PROTECTION NOTES AND SYMBOLS
O-105	DRY DOCK AVE. SITE OPERATIONS
O-106	DRY DOCK AVE. FOUNDATION SITE PLAN
X-801	HEXNER SITE PLAN
X-802	ARCHITECTURAL PLANS
Z-712	Unnamed
O-001	OPERATIONS SYMBOLS AND NOTES
G-001	COVER PAGE
G-002	GENERAL NOTES AND SYMBOLS
G-101	FINISHED SQUARE FOOTAGE COMPLIANCE PLAN
G-102	EGRESS PLAN
G-103	ADA TOUR ROUTE COMPLIANCE PLAN
G-201	SOLAR ENVELOPE COMPLIANCE ELEVATIONS
G-202	SOLAR ENVELOPE COPMLIANCE ELEVATIONS
G-601	SHADING DIAGRAMS
G-901	GENERAL PROJECT RENDERINGS
G-902	GENERAL PROJECT RENDERINGS
C-001	CIVIL NOTES AND SYMBOLS
C-501	VILLAGE LOCATION
C-502	LOT CONDITION ADJUSTMENT DETAILS
L-001	LANDSCAPE NOTES AND SYMBOLS
L-101	DECK AND RAMP PLAN
L-102	VEGETATION PLAN
S-001	STRUCTURAL NOTES AND SYMBOLS
S-101	FOUNDATION PLAN
S-102	FIRST FLOOR FRAMING PLAN
S-103	ROOF FRAMING PLAN
S-104	DECK FRAMING PLAN
S-201	FRAMING ELEVATIONS
S-202	MODULE BRACING
S-203	MODULE BRACING
S-301	FRAMING SECTIONS
S-302	ROOF MODULE DETAILS
S-502	TRUSS
S-601	REINFORCING AND FRAMING SCHEDULES
S-602	COLUMNN AND BEAM SCHEDULES
S-701	TYPICAL DETAILS
S-702	TYPICAL FRAMING DETAILS
S-703	TYPICAL DETAILS
S-704	TYPICAL FOOTING DETAILS
S-705	WEST MODULE CONNECTION DETAILS
S-706	EAST MODULE CONNECTION DEATILS
S-707	SOUTH TRELLIS
S-708	WEST TRELLIS
S-901	FRAMING ISOMETRICS
A-001	ARCHITECTURAL SYMBOLS AND NOTES
A-101	SITE PLAN
A-102	FIRST FLOOR PLAN
A-103	ROOF PLAN
A-104	FIRST FLOOR REFLECTED CEILING PLAN
A-201	SITE ELEVATIONS
A-202	SITE ELEVATIONS
A-211	ELEVATIONS
A-212	ELEVATIONS
A-301	TRANSVERSE BUILDING SECTION
A-302	LONGITUDINAL BUILDING SECTION
A-311	WALL SECTIONS
A-312	WALL SECTIONS
A-601	SCHEDULES
A-602	WINDOW SCHEDULE
A-604	SIDING DESIGN
A-801	MOVEABLE COMPONENT DIAGRAM
I-001	INTERIOR SYMBOLS AND NOTES
I-101	INTERIOR DESIGN PLAN
I-103	INTERIOR DESIGN REFLECTED CEILING PLAN
I-201	INTERIOR DESIGN ELEVATION
I-202	INTERIOR DESIGN ELEVATIONS
I-203	INTERIOR DESIGN ELEVATIONS
I-204	INTERIOR DESIGN ELEVATIONS
I-401	LARGE-SCALE KITCHEN DESIGN DRAWINGS
I-402	BATHROOM DETAILS
I-404	CENTRAL WALL
I-405	INTERIOR PERSPECTIVES
I-601	INTERIOR DESIGN SCHEDULES
F-101	FIRE DETECTION AND ALARM
F-102	FIRE SUPPRESSION
P-001	PLUMBING SYMBOLS AND NOTES
P-101	PLUMBING DISTRIBUTION PLAN
P-501	WATER TANK ENCLOSURE DETAILS
P-701	SOLAR THERMAL
P-901	PLUMBING ISOMETRIC
P-902	SCHEDULES
M-001	MECHANICAL SYMBOLS AND NOTES
M-101	HVAC EQUIPMENT AND DISTRIBUTION PLAN
M-201	MECHANICAL ELEVATIONS
M-601	SCHEDULES
M-602	HVAC DIAGRAMS
E-001	ELECTRICAL SYMBOLS AND NOTES
E-101	ELECTRICAL DISTRIBUTION PLAN
E-102	PV WIRING PLAN
E-103	LIGHTING PLAN
E-201	ELECTRICAL ELEVATIONS
E-202	ELECTRICAL ELEVATIONS
E-203	ELECTRICAL ELEVATIONS
E-204	ELECTRICAL ELEVATIONS
E-601	ONE-LINE DIAGRAM
E-602	THREE-LINE DIAGRAM
E-603	SCHEDULES
Z-702	TRUSS PLATE SHOP DRAWINGS
Z-703	TRUSS SHOP DRAWINGS
Z-704	TRUSS CUTLIST
Z-705	DECK FOOTING SHOP DRAWINGS
Z-708	TRELLIS PLATE SHOP DRAWINGS
Z-709	STEEL PLATE FOOTINGS
Z-710	STEEL PLATE FOOTINGS
O-101	

TEAM OFFICERS

PROJECT MANAGER:
SPENCER CULHANE

PROJECT ARCHITECT:
FRANCISCO LUNA

INTERIOR ARCHITECT:
EVON CALABRESE

CONSTRUCTION MANAGER:
PATRICK DALEY

PROJECT ENGINEER:
WALTER THOMAS

PRIMARY STUDENT CONTACT:
SPENCER CULHANE

HEALTH AND SAFETY OFFICER:
LEILA GONZALEZ

PUBLIC RELATIONS:
CHELSEA KELLEY

PRINCIPAL INVESTIGATOR:
PATRICIA SEITZ

CONSULTANTS

FABRICATOR:
EPOCH HOMES

HVAC:
MARC ROSEMBAUM

STRUCTURAL PRODUCTS:
NORDIC ENGINEERED WOOD

STRUCTURAL:
LEMESSURIER CONSULTANTS INC.

ENERGY ANALYSIS:
PASSIVE HOUSE INSTITUTE US

LIGHTING DESIGN:
SLADEN FEINSTEIN INTEGRATED LIGHTING

ABBREVIATIONS

A	AMPS
DN	DOWN
FFL	FINISH FLOOR LEVEL
GFCI	GROUND FAULT CIRCUIT INTERRUPTER
MECH	MECHANICAL
PSF	POUNDS PER SQUARE FOOT
PV	PHOTO-VOLTAIC
SQFT	SQUARE FEET
T&G	TONGUE AND GROOVE
T.O.	TOP OF
TYP	TYPICAL
UL	UNDERWRITERS LABORATORIES
V	VOLTS
W	WATTS
WIN	WINDOW

GENERAL SECTION NOTES

1. THE DOCUMENTS INCLUDED IN DRAWING INDEX ARE NOT INTENDED TO BE CONSIDERED IN ISOLATION OF ONE ANOTHER. ALL PARTIES/ENTITIES UTILIZING THESE DOCUMENTS FOR QUANTITY SURVEY AND/OR CONSTRUCTION MUST CONSULT THE GENERAL NOTES AND INFORMATION LOCATED ON THIS SHEET AND ALL "G SERIES SHEETS" (GENERAL INFORMATION AND DATA) FOR INFORMATION AND CONDITIONS GOVERNING WORK DESCRIBED IN DOCUMENTS LISTED IN THE DRAWING INDEX BEFORE ADVANCING WITH CONSTRUCTION. USE COMPLETE SETS OF THE CONSTRUCTION DOCUMENTS IN QUANTIFYING AND CONSTRUCTION. NEITHER THE OWNER NOR ARCHITECT ASSUMES RESPONSIBILITIES FOR ERRORS, OMISSIONS OR MISINTERPRETATIONS RESULTING FROM THE USE OF INCOMPLETE SETS OF CONSTRUCTION DOCUMENTS.
2. ALL CONSTRUCTION, MATERIALS, INSTALLATIONS, AND ENERGY CONSERVATION SHALL CONFORM TO THE 2011 SOLAR DECATHLON BUILDING CODE, 2009 INTERNATIONAL RESIDENTIAL CODE, MASSACHUSETTS RESIDENTIAL CODE.
3. DO NOT SCALE. USE ONLY DIMENSIONS CALLED OUT, NOT SCALED DIMENSIONS. CONSULT ARCHITECT WHEN NO DIMENSION IS PROVIDED.
4. REPORT ANY OMISSIONS OR CONFLICTS WITHIN THE DRAWINGS, NOTES, OR DETAILS TO THE ARCHITECT BEFORE PROCEEDING WITH WORK.
5. GRID LINES ARE ORTHOGONAL ON N-S AND E-W AXIS ON BUILDING SITE.
6. PLAN CUT LINE IS TAKEN 4'-0" ABOVE THE FINISHED FLOOR UNLESS NOTED OTHERWISE.
7. ALL ABBREVIATIONS USED ARE REFERENCED FROM THE CONSTRUCTION SPECIFICATION INSTITUTE'S UNIFORM DRAWING SYSTEM TERMS AND ABBREVIATIONS MODULE PUBLISHED IN THE U.S. NATIONAL CAD STANDARD VERSION 4.
8. SUBCONTRACTORS SHALL REVIEW ALL SHEETS AND NOTES OF CONSTRUCTION DOCUMENT TO ENSURE COMPLETE UNDERSTANDING OF THE PROJECT.
9. NOTES ON DRAWINGS PERTAIN TO ALL SIMILAR CONDITIONS WHETHER REPEATED OR NOT. DETAILS NOT SHOWN ARE SIMILAR IN CHARACTER TO THOSE SHOWN.
10. ALL GLAZING SUBJECT TO HUMAN IMPACT MUST BE SAFETY GLAZING, REFER TO IRC SECTION 308.
11. ALL PIPING, DUCTS, ETC., THAT PENETRATE FLOOR SLABS SHALL BE INSTALLED IN A MANNER THAT WILL PRESERVE THE INDICATED FIRE-RESISTIVE AND STRUCTURAL INTEGRITY ON THE DRAWINGS.
12. ALL RATINGS ARE TO COMPLY WITH UNDERWRITERS LABORATORIES (UL) TEST RATINGS.
13. WHERE DISCREPANCIES EXIST BETWEEN THE DRAWINGS OF THE VARIOUS TRADES, CONSULT THE ARCHITECT PRIOR TO PROCEEDING WITH WORK.
14. PAINT CONTAINING LEAD MAY NOT BE USED ON THIS PROJECT.
15. ASBESTOS CONTAINING MATERIALS MAY NOT BE USED ON THIS PROJECT.
16. FOR ALL ABBREVIATIONS, REFER TO THE US NATIONAL CAD STANDARDS VERSION 4.

GENERAL
SOLAR DECATHLON
DESIGN
DEVELOPMENT

TEAM NAME: TEAM MASSACHUSETTS
ADDRESS: MASSART 621 HUNTINGTON AVE. BOSTON MA 02115
CONTACT: SPENCER CULHANE 602.677.6388 SPENCER.CULHANE@4DHOME.US WWW.4DHOME.US

CONSULTANTS
EPOCH HOMES
PASSIVE HOUSE INSTITUTE US
SLADEN FEINSTEIN INTEGRATED LIGHTING
LEMESSURIER CONSULTANTS, STRUCTURAL ENGINEERS

CLIENT
U.S. DEPARTMENT OF ENERGY
SOLAR DECATHLON 2011
WWW.SOLARDECATHLON.GOV

MARK	DATE	DESCRIPTION

LOT NUMBER: NA
DRAWN BY: EC
CHECKED BY: PH
COPYRIGHT: NONE: PROJECT IS PUBLIC DOMAIN

SHEET TITLE
GENERAL NOTES AND SYMBOLS

G-002

8/12/2011 8:51:17 PM

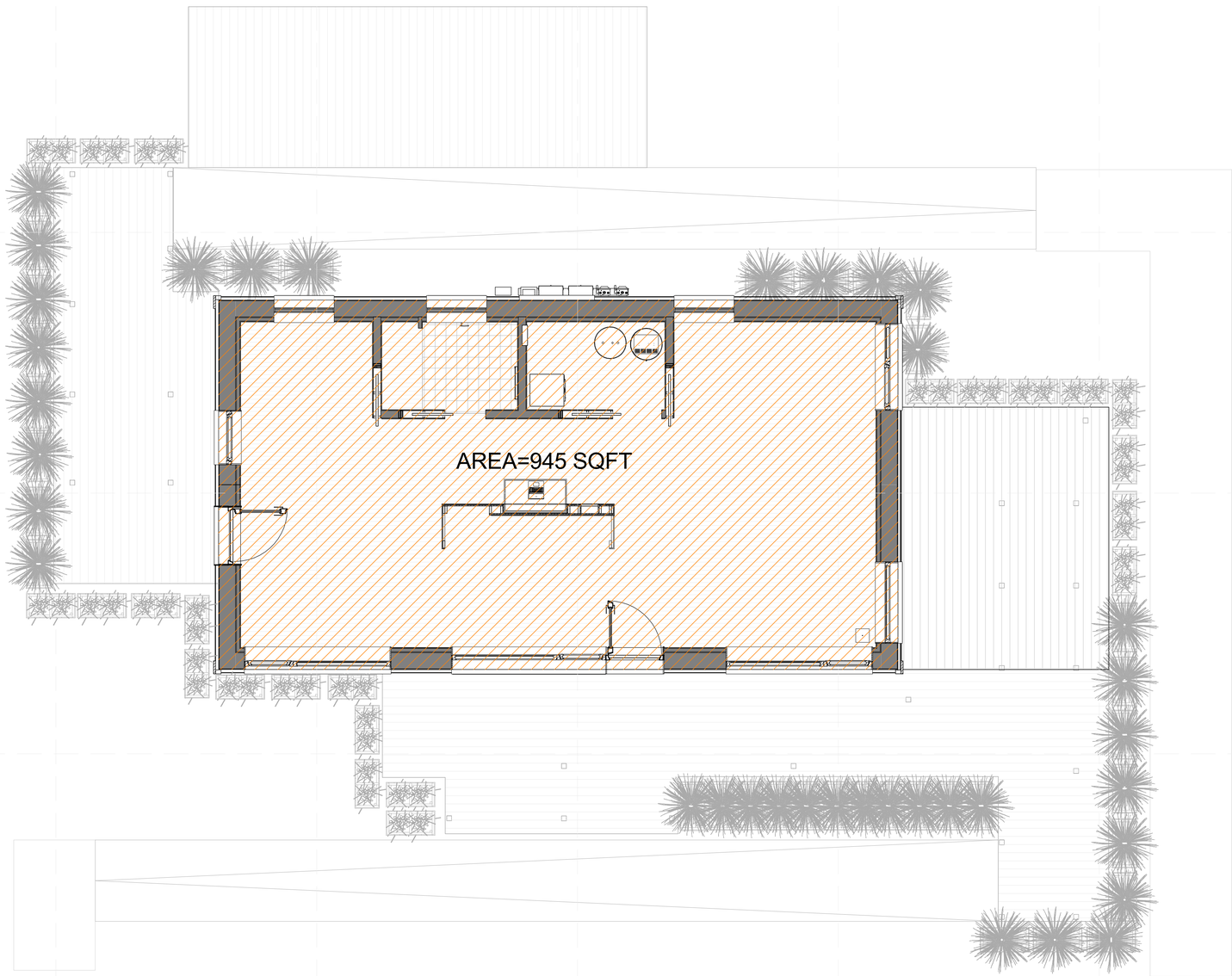

A1 ARCHITECTURAL FOOTPRINT
1/4" = 1'-0"

0 2' 4' 8'

GENERAL SHEET NOTES

1. THE FINISHED AREA OF THE HOUSE HAS BEEN CALCULATED IN ACCORDANCE WITH THE AMERICAN NATIONAL STANDARD FOR SINGLE-FAMILY RESIDENTIAL BUILDINGS Z765-2003.
2. FINISHED SQUARE FOOTAGE CALCULATIONS FOR THIS HOUSE WERE MADE BASED ON PLAN DIMENSIONS ONLY AND MAY VARY FROM THE FINISHED SQUARE FOOTAGE OF THE HOUSE AS BUILT.
3. ALL MEASUREMENTS ARE ROUNDED TO THE NEAREST WHOLE SQUARE FOOT IN ACCORDANCE WITH ANSI Z765-2003.
4. TOTAL AREA OF HOME CALCULATED ACCORDING TO ANSI Z765-2003 IS 945 SQUARE FEET WHICH IS COMPLIANT WITH RULE 6-2: FINISHED SQUARE FOOTAGE. THE AREA IS BETWEEN 600 SQUARE FEET AND 1000 SQUARE FEET.

REFERENCE KEYNOTES

SHEET KEYNOTES

4D HOME

TEAM NAME: TEAM MASSACHUSETTS
ADDRESS: MASSART 621 HUNTINGTON AVE. BOSTON MA 02115
CONTACT: SPENCER CULHANE 602.677.6388 SPENCER.CULHANE@4DHOME.US WWW.4DHOME.US

CONSULTANTS

EPOCH HOMES

PASSIVE HOUSE INSTITUTE US

SLADEN FEINSTEIN INTEGRATED LIGHTING

LEMESSURIER CONSULTANTS, STRUCTURAL ENGINEERS

CLIENT

U.S. DEPARTMENT OF ENERGY

SOLAR DECATHLON 2011

WWW.SOLARDECATHLON.GOV

U.S. DEPARTMENT OF ENERGY SOLAR DECATHLON

MARK	DATE	DESCRIPTION

LOT NUMBER: NA

DRAWN BY: EC_SC

CHECKED BY: PH

COPYRIGHT: NONE: PROJECT IS PUBLIC DOMAIN

SHEET TITLE

FINISHED SQUARE FOOTAGE COMPLIANCE PLAN

G-101

8/12/2011 8:51:54 PM

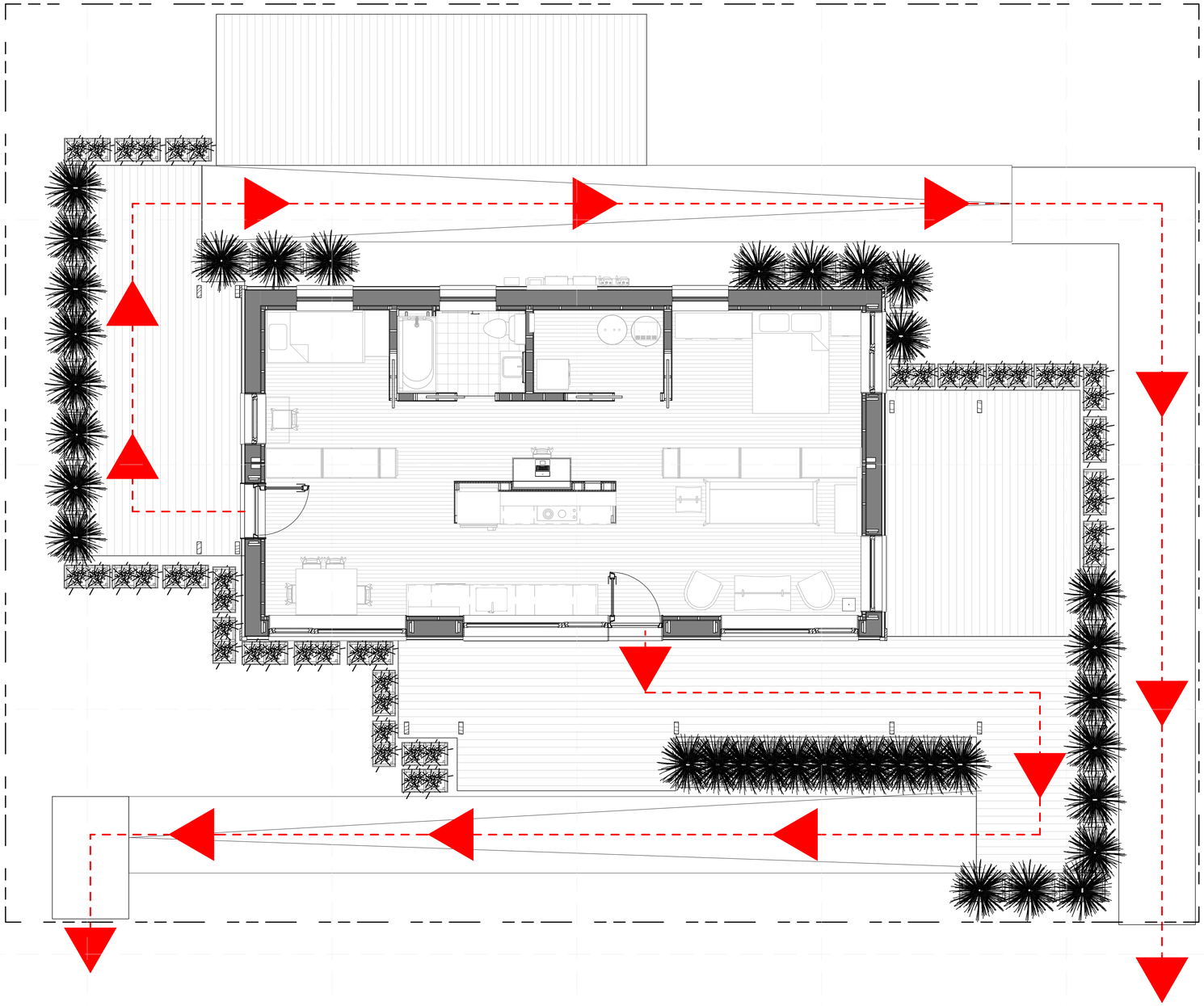

A1 EMERGENCY EGRESS PLAN
1/4" = 1'-0"

0 2' 4' 8'

GENERAL SHEET NOTES

1. ALL COOIDORS/ PASSAGEWAYS MEET NSI 117.1 AND THE MASSACHUSETTS ACCESSIBILITY CODE BEFORE CONSTRUCTION, CONTRACTOR TO VERIFY CONFORMANCE WITH LOCAL CODE REQUIREMENTS.
2. ALL SURFACES HAVE A MAXIMUM SLOPE OF 1:20, NO RAILING IS REQUIRED.
3. FINISHED FLOOR HEIGHT SHALL BE LESS THAN 30"ABOVE GRADE, NO RAILING IS REQUIRED.
4. VERTICAL CHANGES IN LEVEL OF A 1/4" OR LESS WILL HAVE A MAXIMUM SLOPE OF 2:1.
5. VERTICAL CHANGES IN LEVEL OF A 1/2" WILL HAVE A MAXIMUM SLOPE OF 1:12.
6. MAXIMUM SPACING BETWEEN DECKING MEMBERS SHALL BE 1/2".

REFERENCE KEYNOTES

SHEET KEYNOTES

NATIONAL MALL TOUR LEGEND

MARK	DESCRIPTION
F	FIRE EXTINGUISHER LOCATION
	MOVEMENT DIRECTION
	PRIMARY MOVEMENT PATH
	ADA TURN AROUND
	MAJOR STOPPING POINTS

4D HOME

TEAM NAME: TEAM MASSACHUSETTS
ADDRESS: MASSART 621 HUNTINGTON AVE. BOSTON MA 02115
CONTACT: SPENCER CULHANE 602.677.6388 SPENCER.CULHANE@4DHOME.US WWW.4DHOME.US

CONSULTANTS

EPOCH HOMES

PASSIVE HOUSE INSTITUTE US

SLADEN FEINSTEIN INTEGRATED LIGHTING

LEMESSURIER CONSULTANTS, STRUCTURAL ENGINEERS

CLIENT

U.S. DEPARTMENT OF ENERGY
SOLAR DECATHLON 2011
WWW.SOLARDECATHLON.GOV

U.S. DEPARTMENT OF ENERGY SOLAR DECATHLON

MARK	DATE	DESCRIPTION

LOT NUMBER: NA
DRAWN BY: EC_SC
CHECKED BY: PH
COPYRIGHT: NONE: PROJECT IS PUBLIC DOMAIN

SHEET TITLE

EGRESS PLAN

G-102

8/12/2011 8:52:35 PM

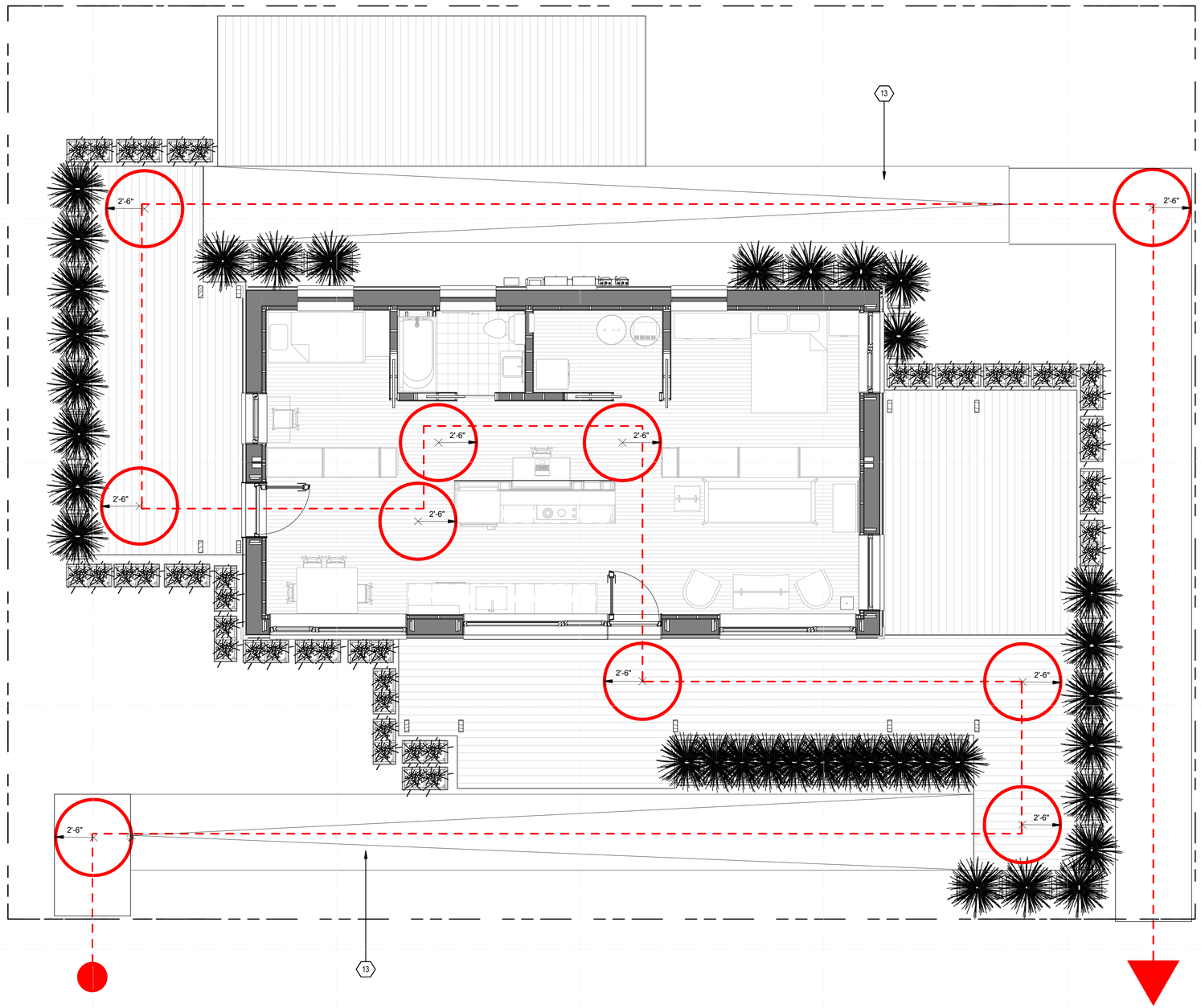

A1 ACCESSIBILITY / HOUSE TOUR PLAN
1/4" = 1'-0"

0 2' 4' 8'

GENERAL SHEET NOTES

1. THE MAXIMUM SLOPE OF ALL RAMPS ON THE SITE SHALL BE 1:12.
2. HOUSE TOUR PLAN PROVIDED FOR COMPETITION PURPOSES ONLY AND HAS NO IMPACT ON CONSTRUCTION REQUIREMENTS OR SEQUENCING.
3. ALL SIGNAGE SHALL BE IN CONFORMANCE WITH THE SOLAR DECATHLON BUILDING CODE 2011 AND THE NATIONAL PARK SERVICE RULES. ALL SIGNAGE SHALL MEET ACCESSIBILITY GUIDELINES.
4. TOLIET SHALL SECURED SHUT FOR THE DURATION OF THE COMPETITION.
5. ALL COORIDORS / PASSAGEWAYS MEET ALONG TOUR ROUTE MEET ANSI 117.1 AND THE MASSACHUSETTS ACCESSIBILIY CODE. BEFORE CONSTRUCTION, CONTRACTOR TO VERIFY CONFORMANCE WITH LOCAL CODE REQUIREMENTS GIVEN FINAL FUNCTION OF BUILDING.
6. THE BATHROOM WILL BE OPEN FOR VIEWING DURING THE COMPETITION BUT WILL NOT BE OCCUPIED BY THE PUBLIC.
7. UNLESS OTHERWISE NOTED, ALL SURFACES WILL HAVE A MAXIMUM SLOPE OF 1:20.
8. MAXIMUM SPACING BETWEEN DECKING MEMBERS SHALL BE 1/2".

REFERENCE KEYNOTES

SHEET KEYNOTES

13 TERMINAL BOX

NATIONAL MALL TOUR LEGEND

MARK	DESCRIPTION
F	FIRE EXTINGUISHER LOCATION
◀	MOVEMENT DIRECTION
- - -	PRIMARY MOVEMENT PATH
▬	ADA TURN AROUND
●	MAJOR STOPPING POINTS

4D HOME

TEAM NAME: TEAM MASSACHUSETTS
ADDRESS: MASSART 621 HUNTINGTON AVE BOSTON MA 02115
CONTACT: SPENCER CULHANE 602.677.6388 SPENCER.CULHANE@4DHOME.US WWW.4DHOME.US

CONSULTANTS

EPOCH HOMES
PASSIVE HOUSE INSTITUTE US
SLADEN FEINSTEIN INTEGRATED LIGHTING
LEMESSURIER CONSULTANTS, STRUCTURAL ENGINEERS

CLIENT

U.S. DEPARTMENT OF ENERGY
SOLAR DECATHLON 2011
WWW.SOLARDECATHLON.GOV

U.S. DEPARTMENT OF ENERGY SOLAR DECATHLON

MARK	DATE	DESCRIPTION

LOT NUMBER: NA
DRAWN BY: EC_SC
CHECKED BY: PH
COPYRIGHT: NONE: PROJECT IS PUBLIC DOMAIN

SHEET TITLE

ADA TOUR ROUTE COMPLIANCE PLAN

G-103

8/12/2011 8:53:19 PM

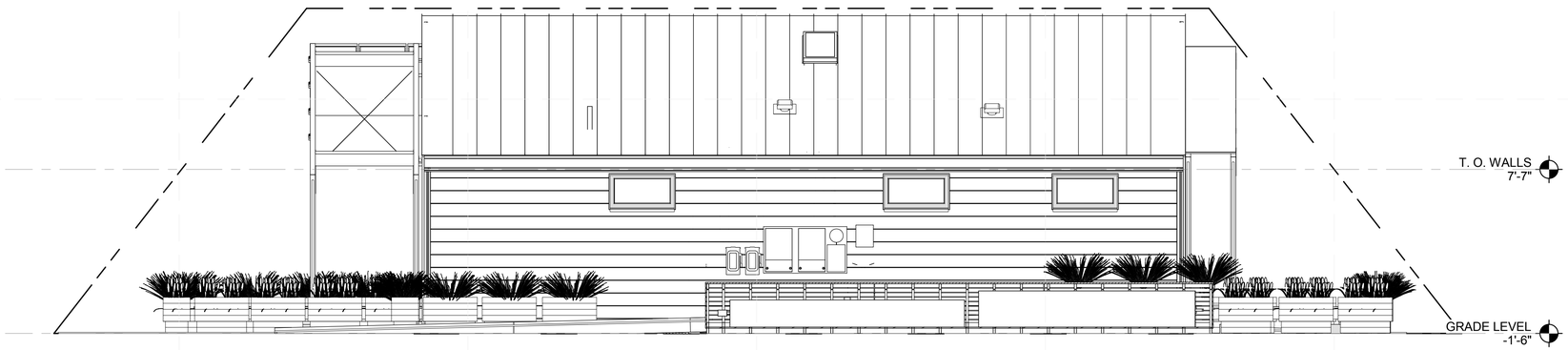

C1 SOLAR ENVELOPE - NORTH
1/4" = 1'-0"

0 2' 4' 8'

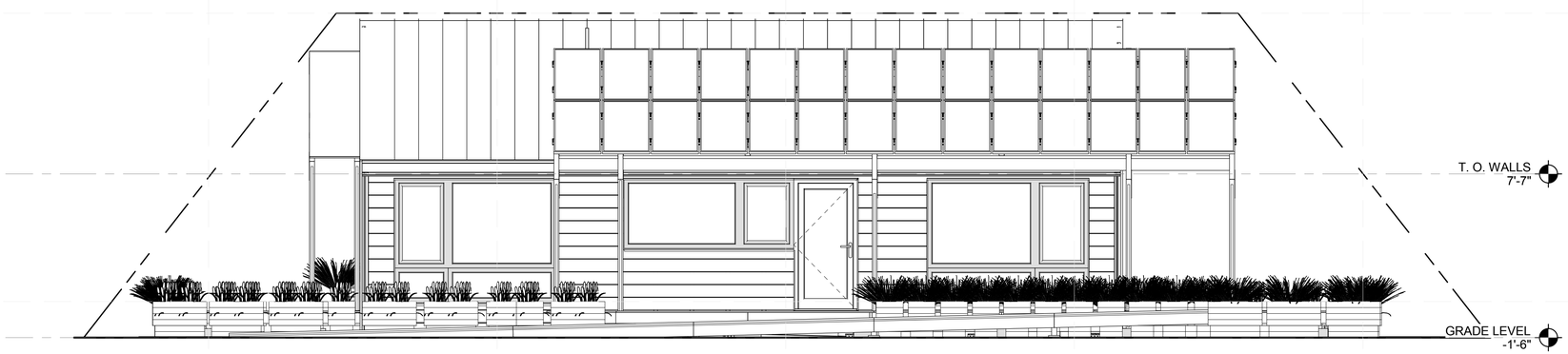

A1 SOLAR ENVELOPE - SOUTH
1/4" = 1'-0"

0 2' 4' 8'

GENERAL SHEET NOTES

1. WALL AND PARTITION DIMENSIONS SHOWN ON DRAWINGS ARE NOMINAL DIMENSIONS.
2. USE OF SPECIFICATION SECTION NUMBERS WITHIN KEYNOTES OR ELSEWHERE ON THE DRAWINGS IS MADE SOLELY FOR CONVENIENCE IN COORDINATION AND WITHOUT LIMITATION.
3. THE CONTRACTOR IS RESPONSIBLE FOR PROVIDING THE WORK IN ACCORDANCE TO THE CONTRACT DOCUMENTS IN THE ENTIRETY.
4. FOR ROOM FINISH SCHEDULE SEE I-SERIES DRAWINGS
5. FOR DOOR AND FRAME INFORMATION, SEE A-5 SERIES.
6. FOR WINDOW AND FRAME TYPES, SEE ELEVATIONS AND A-5 SERIES.
7. THE HOUSE AND ALL ASSOCIATED EOMPONENTS HAVE BEEN DESIGNED TO FIT WITHIN THE DEFINED SOLAR ENVELOPE IF ELEMENTS ARE EXPECTED TO EXCEED SHOWN DIMENSIONS OF SOLAR ENVELOPE, CONTRACTOR TO CONTACT ARCHTIECT PRIOR TO PROCEEDING WITH WORK.

REFERENCE KEYNOTES

SHEET KEYNOTES

4D HOME

TEAM NAME: TEAM MASSACHUSETTS

ADDRESS: MASSART
621 HUNTINGTON AVE.
BOSTON MA 02115

CONTACT: SPENCER CULHANE 602.677.6388
SPENCER.CULHANE@4DHOME.US
WWW.4DHOME.US

CONSULTANTS

EPOCH HOMES

PASSIVE HOUSE INSTITUTE US

SLADEN FEINSTEIN INTEGRATED LIGHTING

LEMESSURIER CONSULTANTS, STRUCTURAL ENGINEERS

CLIENT

U.S. DEPARTMENT OF ENERGY

SOLAR DECATHLON 2011

WWW.SOLARDECATHLON.GOV

U.S. DEPARTMENT OF ENERGY SOLAR DECATHLON

MARK	DATE	DESCRIPTION

LOT NUMBER:	NA
DRAWN BY:	SC
CHECKED BY:	PH
COPYRIGHT:	NONE: PROJECT IS PUBLIC DOMAIN

SHEET TITLE

SOLAR ENVELOPE COMPLIANCE ELEVATIONS

G-201

8/12/2011 8:54:07 PM

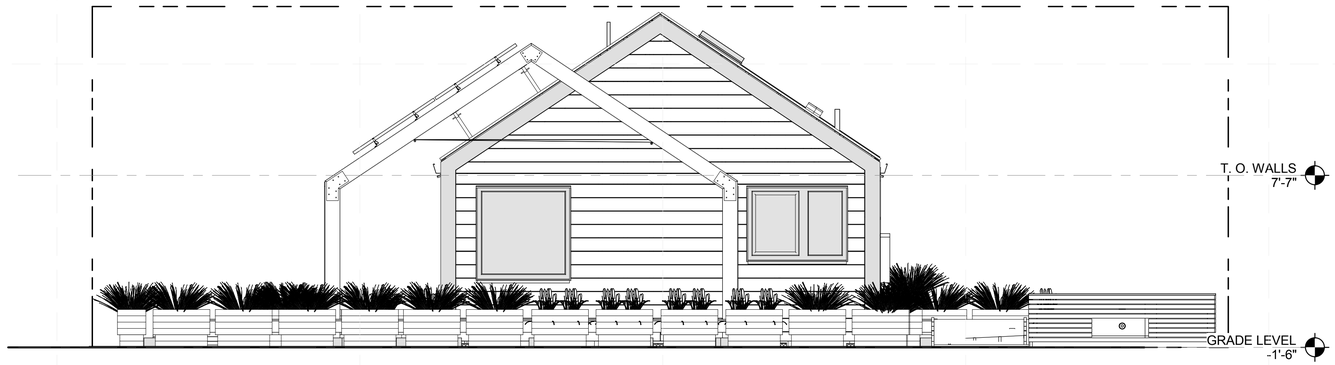

C1 SOLAR ENVELOPE - EAST
1/4" = 1'-0"

0 2' 4' 8'

A1 SOLAR ENVELOPE - WEST
1/4" = 1'-0"

0 2' 4' 8'

GENERAL SHEET NOTES

1. MAXIMUM PRESSURE ON SOIL TO BE LESS THAN 1500 PSF
2. OWNER SHALL REPAIT AND / OR REPLACE PRE EXISTING VEGETATION AFTER REMOVAL OF HOUSE.
3. SITE TO BE MARKED AND SHALL REMAIN ADA COMPLIANT AT ALL TIMES ONCE COMPLETE.
4. THE HOUSE AND ALL ASSOCIATED EOMPONENTS HAVE BEEN DESIGNED TO FIT WITHIN THE DEFINED SOLAR ENVELOPE IF ELEMENTS ARE EXPECTED TO EXCEED SHOWN DIMENSIONS OF SOLAR ENVELOPE, CONTRACTOR TO CONTACT ARCHTIECT PRIOR TO PROCEEDING WITH WORK.

REFERENCE KEYNOTES

SHEET KEYNOTES

4D HOME

TEAM NAME: TEAM MASSACHUSETTS
ADDRESS: MASSART 621 HUNTINGTON AVE. BOSTON MA 02115
CONTACT: SPENCER CULHANE 602.677.6388 SPENCER.CULHANE@4DHOME.US WWW.4DHOME.US

CONSULTANTS

EPOCH HOMES
PASSIVE HOUSE INSTITUTE US
SLADEN FEINSTEIN INTEGRATED LIGHTING
LEMESSURIER CONSULTANTS, STRUCTURAL ENGINEERS

CLIENT

U.S. DEPARTMENT OF ENERGY
SOLAR DECATHLON 2011
WWW.SOLARDECATHLON.GOV

U.S. DEPARTMENT OF ENERGY SOLAR DECATHLON

MARK	DATE	DESCRIPTION

LOT NUMBER:	NA
DRAWN BY:	SC
CHECKED BY:	PH
COPYRIGHT:	NONE: PROJECT IS PUBLIC DOMAIN

SHEET TITLE

SOLAR ENVELOPE COPMLIANCE ELEVATIONS

G-202

8/12/2011 8:54:45 PM

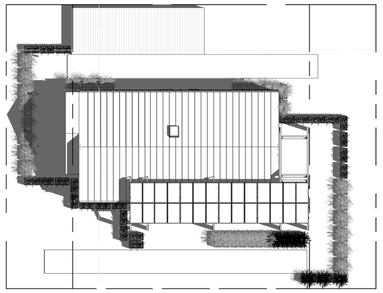

D1 SUMMER SOLSTICE - 9AM
1/16" = 1'-0"
0 8' 16' 32'

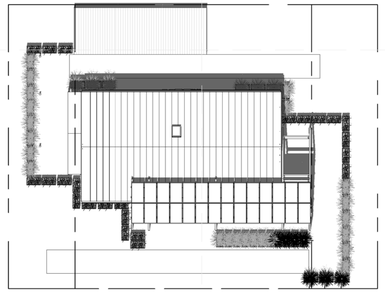

D3 SUMMER SOLSTICE - 12PM
1/16" = 1'-0"
0 8' 16' 32'

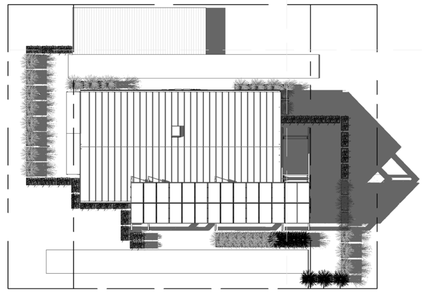

D5 SUMMER SOLSTICE - 4PM
1/16" = 1'-0"
0 8' 16' 32'

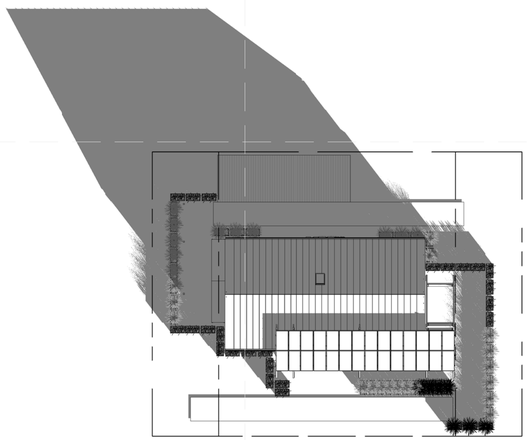

A1 WINTER SOLSTICE - 9AM
1/16" = 1'-0"
0 8' 16' 32'

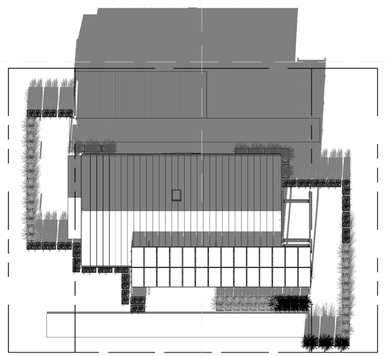

A3 WINTER SOLSTICE - 12PM
1/16" = 1'-0"
0 8' 16' 32'

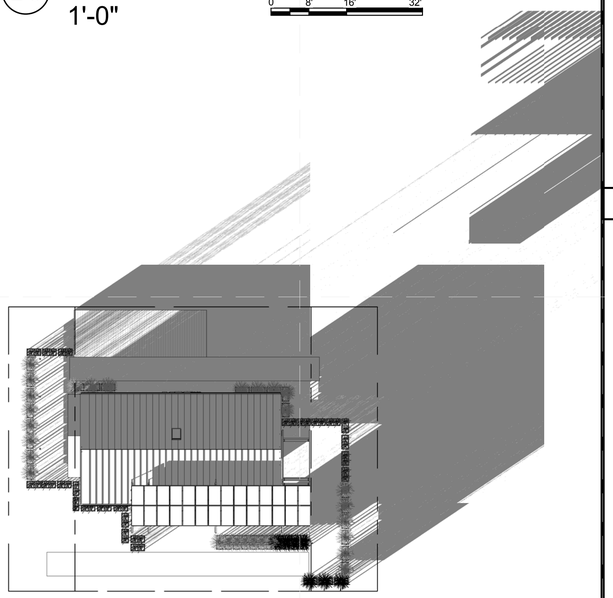

A5 WINTER SOLSTICE - 4PM
1/16" = 1'-0"
0 8' 16' 32'

GENERAL SHEET NOTES

1. DRAWINGS ON THIS PAGE DEMONSTRATE COMPLIANCE WITH RULE 9-1.

REFERENCE KEYNOTES

SHEET KEYNOTES

4D HOME

TEAM NAME:	TEAM MASSACHUSETTS
ADDRESS:	MASSART 621 HUNTINGTON AVE. BOSTON MA 02115
CONTACT:	SPENCER CULHANE 602.677.6388 SPENCER.CULHANE@4DHOME.US WWW.4DHOME.US

CONSULTANTS

EPOCH HOMES

PASSIVE HOUSE INSTITUTE US

SLADEN FEINSTEIN INTEGRATED LIGHTING

LEMESSURIER CONSULTANTS, STRUCTURAL ENGINEERS

CLIENT

U.S. DEPARTMENT OF ENERGY

SOLAR DECATHLON 2011

WWW.SOLARDECATHLON.GOV

U.S. DEPARTMENT OF ENERGY SOLAR DECATHLON

MARK	DATE	DESCRIPTION

LOT NUMBER:	NA
DRAWN BY:	SC
CHECKED BY:	PH
COPYRIGHT:	NONE: PROJECT IS PUBLIC DOMAIN

SHEET TITLE

SHADING DIAGRAMS

G-601

8/12/2011 8:55:35 PM

C 1 SOUTH WEST PROJECT RENDERING
NOT TO SCALE

A 1 EAST PROJECT RENDERING
NOT TO SCALE

8/12/2011 8:55:37 PM

4D HOME

TEAM NAME:	TEAM MASSACHUSETTS
ADDRESS:	MASSART 621 HUNTINGTON AVE. BOSTON MA 02115
CONTACT:	SPENCER CULHANE 602.677.6388 SPENCER.CULHANE@4DHOME.US WWW.4DHOME.US

CONSULTANTS

EPOCH HOMES

PASSIVE HOUSE INSTITUTE US

SLADEN FEINSTEIN INTEGRATED LIGHTING

LEMESSURIER CONSULTANTS, STRUCTURAL ENGINEERS

CLIENT

U.S. DEPARTMENT OF ENERGY

SOLAR DECATHLON 2011

WWW.SOLARDECATHLON.GOV

U.S. DEPARTMENT OF ENERGY SOLAR DECATHLON

MARK	DATE	DESCRIPTION

LOT NUMBER:	NA
DRAWN BY:	FL
CHECKED BY:	PH
COPYRIGHT:	NONE: PROJECT IS PUBLIC DOMAIN

SHEET TITLE

GENERAL PROJECT RENDERINGS

G-901

A EAST PROJECT RENDERING
NOT TO SCALE

TEAM NAME:	TEAM MASSACHUSETTS
ADDRESS:	MASSART 621 HUNTINGTON AVE. BOSTON MA 02115
CONTACT:	SPENCER CULHANE 602.677.6388 SPENCER.CULHANE@4DHOME.US WWW.4DHOME.US

CONSULTANTS

EPOCH HOMES

PASSIVE HOUSE INSTITUTE US

SLADEN FEINSTEIN INTEGRATED LIGHTING

LEMESSURIER CONSULTANTS, STRUCTURAL ENGINEERS

CLIENT

U.S. DEPARTMENT OF ENERGY

SOLAR DECATHLON 2011

WWW.SOLARDECATHLON.GOV

MARK	DATE	DESCRIPTION

LOT NUMBER:	NA
DRAWN BY:	FL
CHECKED BY:	PH
COPYRIGHT:	NONE: PROJECT IS PUBLIC DOMAIN

SHEET TITLE

GENERAL PROJECT RENDERINGS

G-902

8/12/2011 8:55:39 PM

GENERAL HAZARDOUS MATERIALS NOTES

GENERAL SHEET NOTES

REFERENCE KEYNOTES

SHEET KEYNOTES

HAZARD
SOLAR DECATHLON
CONSTRUCTION DOCUMENTS

TEAM NAME: TEAM MASSACHUSETTS

ADDRESS: MASSART
621 HUNTINGTON AVE.
BOSTON MA 02115

CONTACT: SPENCER CULHANE 602.677.6388
SPENCER.CULHANE@4DHOME.US
WWW.4DHOME.US

CONSULTANTS

EPOCH HOMES

PASSIVE HOUSE INSTITUTE US

SLADEN FEINSTEIN INTEGRATED LIGHTING

LEMESSURIER CONSULTANTS, STRUCTURAL ENGINEERS

CLIENT

U.S. DEPARTMENT OF ENERGY

SOLAR DECATHLON 2011

WWW.SOLARDECATHLON.GOV

MARK	DATE	DESCRIPTION

LOT NUMBER: NA

DRAWN BY: AUTHOR

CHECKED BY: CHECKER

COPYRIGHT: NONE: PROJECT IS PUBLIC DOMAIN

SHEET TITLE

HAZARDOUS MATERIALS NOTES AND SYMBOLS

H-001

8/12/2011 8:55:42 PM

8/12/2011 8:55:44 PM

TEAM NAME:	TEAM MASSACHUSETTS
ADDRESS:	MASSART 621 HUNTINGTON AVE. BOSTON MA 02115
CONTACT:	SPENCER CULHANE 602.677.6388 SPENCER.CULHANE@4DHOME.US WWW.4DHOME.US

CONSULTANTS

EPOCH HOMES

PASSIVE HOUSE INSTITUTE US

SLADEN FEINSTEIN INTEGRATED LIGHTING

LEMESSURIER CONSULTANTS, STRUCTURAL ENGINEERS

CLIENT

U.S. DEPARTMENT OF ENERGY

SOLAR DECATHLON 2011

WWW.SOLARDECATHLON.GOV

MARK	DATE	DESCRIPTION

LOT NUMBER:	NA
DRAWN BY:	AUTHOR
CHECKED BY:	CHECKER
COPYRIGHT:	NONE: PROJECT IS PUBLIC DOMAIN

SHEET TITLE

LIQUID LOCATION AND SPILL CONTAINMENT PLAN

H-101

TEAM NAME:	TEAM MASSACHUSETTS
ADDRESS:	MASSART 621 HUNTINGTON AVE. BOSTON MA 02115
CONTACT:	SPENCER CULHANE 602.677.6388 SPENCER.CULHANE@4DHOME.US WWW.4DHOME.US

CONSULTANTS

EPOCH HOMES

PASSIVE HOUSE INSTITUTE US

SLADEN FEINSTEIN INTEGRATED LIGHTING

LEMESSURIER CONSULTANTS, STRUCTURAL ENGINEERS

CLIENT

U.S. DEPARTMENT OF ENERGY

SOLAR DECATHLON 2011

WWW.SOLARDECATHLON.GOV

MARK	DATE	DESCRIPTION

LOT NUMBER:	NA
DRAWN BY:	AUTHOR
CHECKED BY:	CHECKER
COPYRIGHT:	NONE: PROJECT IS PUBLIC DOMAIN

SHEET TITLE

SPILL CONTAINMENT DETAILS

H-501

8/12/2011 8:55:46 PM

TEAM NAME:	TEAM MASSACHUSETTS
ADDRESS:	MASSART 621 HUNTINGTON AVE. BOSTON MA 02115
CONTACT:	SPENCER CULHANE 602.677.6388 SPENCER.CULHANE@4DHOME.US WWW.4DHOME.US

CONSULTANTS

EPOCH HOMES

PASSIVE HOUSE INSTITUTE US

SLADEN FEINSTEIN INTEGRATED LIGHTING

LEMESSURIER CONSULTANTS, STRUCTURAL ENGINEERS

CLIENT

U.S. DEPARTMENT OF ENERGY

SOLAR DECATHLON 2011

WWW.SOLARDECATHLON.GOV

MARK	DATE	DESCRIPTION

LOT NUMBER:	NA
DRAWN BY:	AUTHOR
CHECKED BY:	CHECKER
COPYRIGHT:	NONE: PROJECT IS PUBLIC DOMAIN

SHEET TITLE

SCHEDULE OF LIQUID CONTAINMENT DEVICES

H-601

8/12/2011 8:55:47 PM

SURVEY DRAWINGS

SOLAR DECATHLON

CONSTRUCTION DOCUMENTS

8/12/2011 9:08:34 PM

PROJECT LOGO

TEAM NAME:	TEAM MASSACHUSETTS
ADDRESS:	MASSART 621 HUNTINGTON AVE. BOSTON MA 02115
CONTACT:	SPENCER CULHANE 602.677.6388 SPENCER.CULHANE@4DHOME.US WWW.4DHOME.US

CONSULTANTS

FANTASTIC ARCHITECTURE

AMAZING ENGINEERS

PERFECT LANDSCAPING

SAFETY FIRST CODE CONSULTANTS

CLIENT

U.S. DEPARTMENT OF ENERGY

SOLAR DECATHLON 2011

WWW.SOLARDECATHLON.GOV

U.S. DEPARTMENT OF ENERGY SOLAR DECATHLON

MARK	DATE	DESCRIPTION

LOT NUMBER:	NA
DRAWN BY:	AUTHOR
CHECKED BY:	CHECKER
COPYRIGHT:	NONE: PROJECT IS PUBLIC DOMAIN

SHEET TITLE

SURVEY DRAWINGS (DELETE IF NOT USED)

V-001

GENERAL CIVIL NOTES

1. VERIFY AND MARK ALL LOCATIONS OF ALL CIVIL UTILITIES (WATER, SEWER, GAS, ELECTRICAL ETC.), ABOVE AND BELOW GROUND LEVEL, BEFORE BEGINNING ANY WORK OR GROUND BREAKING.
2. MARK / PAINT / STAKE ALL BUILDING LOCATIONS, FENCES, WALLS, FOUNDATIONS ETC.
3. ALL WALLS, FOUNDATIONS, FENCES, DECKS, ETC. ARE TO BE APPROPRIATELY PARALLEL OR PERPENDICULAR TO BUILDING PLANE, UNLESS OTHERWISE SPECIFIED.
4. IMMEDIATELY NOTIFY ARCHITECT OF ANY DISCREPANCIES BETWEEN DRAWINGS AND EXISTING SITE CONDITIONS BEFORE PROCEEDING WITH WORK.
5. REFER TO ARCHITECTURAL PLANS FOR GRID LAYOUT AND LOCATION.

CIVIL
SOLAR DECATHLON
CONSTRUCTION DOCUMENTS

TEAM NAME: TEAM MASSACHUSETTS

ADDRESS: MASSART
621 HUNTINGTON AVE.
BOSTON MA 02115

CONTACT: SPENCER CULHANE 602.677.6388
SPENCER.CULHANE@4DHOME.US
WWW.4DHOME.US

CONSULTANTS

EPOCH HOMES

PASSIVE HOUSE INSTITUTE US

SLADEN FEINSTEIN INTEGRATED LIGHTING

LEMESSURIER CONSULTANTS, STRUCTURAL ENGINEERS

CLIENT

U.S. DEPARTMENT OF ENERGY

SOLAR DECATHLON 2011

WWW.SOLARDECATHLON.GOV

MARK	DATE	DESCRIPTION

LOT NUMBER:	NA
DRAWN BY:	SC_FL_EC
CHECKED BY:	PH
COPYRIGHT:	NONE: PROJECT IS PUBLIC DOMAIN

SHEET TITLE

CIVIL NOTES AND SYMBOLS

C-001

8/12/2011 8:47:24 PM

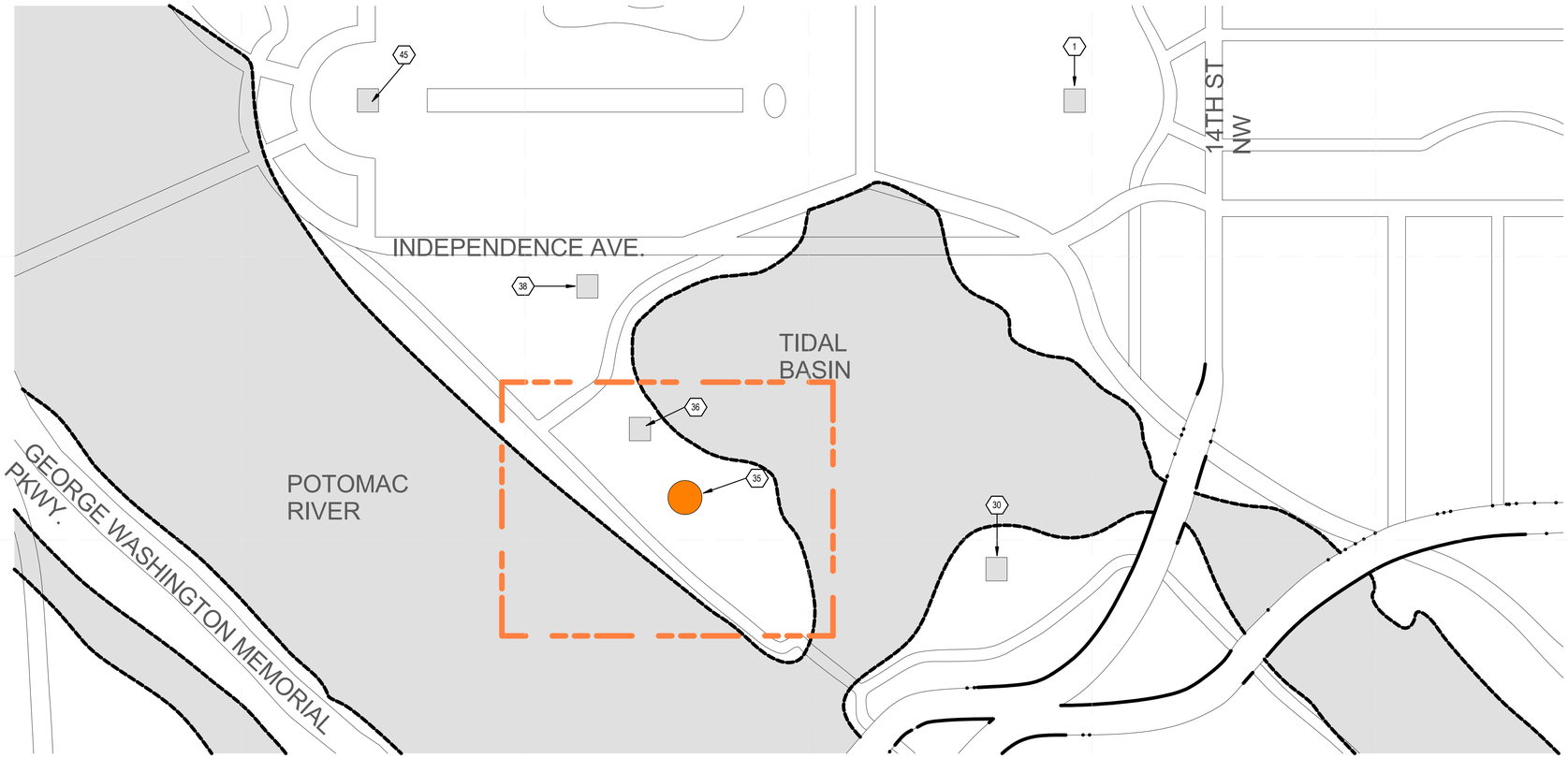

C 1 NATIONAL MALL LOCATION MAP

NOT TO SCALE

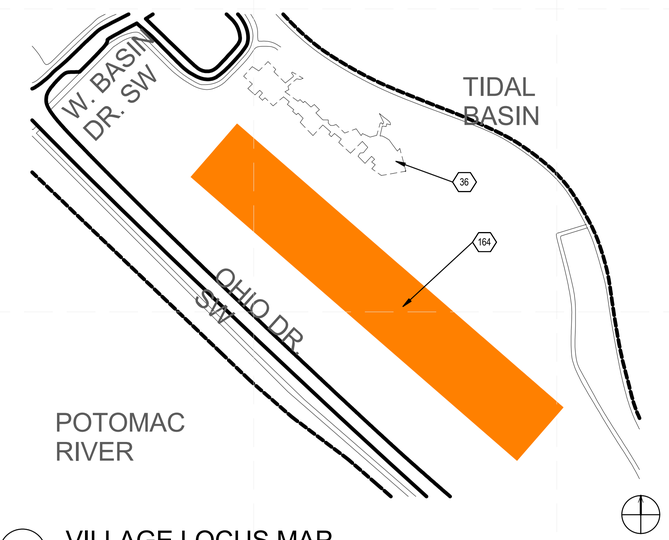

A4 VILLAGE LOCUS MAP

NOT TO SCALE

GENERAL SHEET NOTES

1. SITE INFORMATION SHOWN FOR INFORMATIONAL PURPOSES ONLY AND IS SUBJECT TO CHANGE.
2. ORGANIZERS TO PROVIDE LIMITS OF LOT AND SCCESS TO THE NATIONAL MALL PRIOR TO CONSTRUCTION. HOUSE TO BE LOCATED IN RELATION TO THE SOLAR ENVELOPE EXTENTS ESTABLICHED BY THE ORGANIZERS.

REFERENCE KEYNOTES

SHEET KEYNOTES

1	WASHINTON MONUMENT
30	JEFFERSON MEMORIAL
35	U.S. DEPARTMENT OF ENERGY SOLAR DECATHLON 2011, NATIONAL MALL
36	FRANKLIN DELANO ROOSEVELT MEMORIAL
38	MARTIN LUTHER KING JR. MEMORIAL
45	LINCOLN MEMORIAL
164	APPROXIMATE VILLAGE LOCATION

TEAM NAME: TEAM MASSACHUSETTS

ADDRESS: MASSART 621 HUNTINGTON AVE. BOSTON MA 02115

CONTACT: SPENCER CULHANE 602.677.6388 SPENCER.CULHANE@4DHOME.US WWW.4DHOME.US

CONSULTANTS

EPOCH HOMES

PASSIVE HOUSE INSTITUTE US

SLADEN FEINSTEIN INTEGRATED LIGHTING

LEMESSURIER CONSULTANTS, STRUCTURAL ENGINEERS

CLIENT

U.S. DEPARTMENT OF ENERGY

SOLAR DECATHLON 2011

WWW.SOLARDECATHLON.GOV

MARK	DATE	DESCRIPTION

LOT NUMBER:	NA
DRAWN BY:	SC
CHECKED BY:	PH
COPYRIGHT:	NONE: PROJECT IS PUBLIC DOMAIN

SHEET TITLE

VILLAGE LOCATION

C-501

8/12/2011 8:47:47 PM

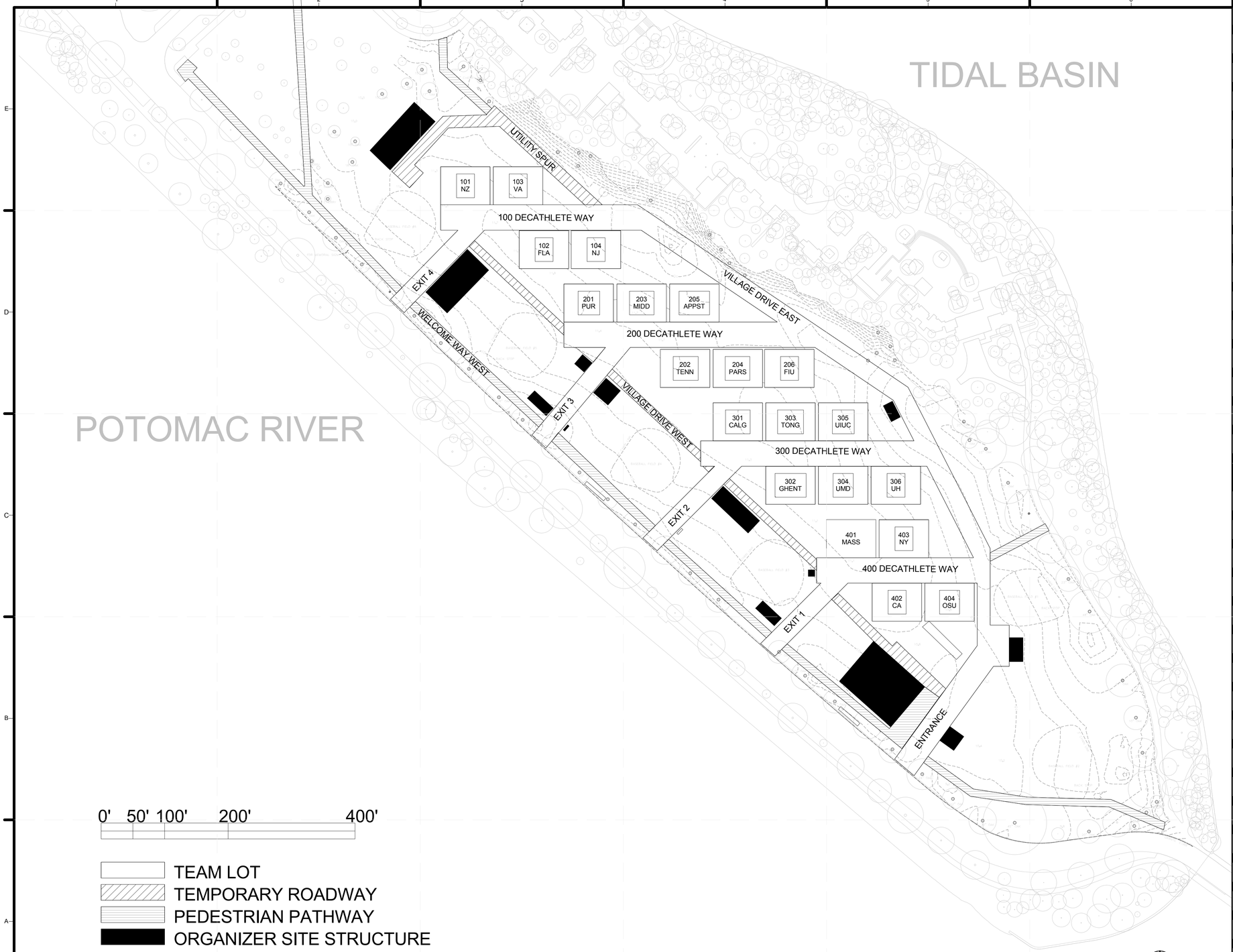

A5 DECATHLETE VILLAGE MAP
1" = 80'-0"

8/12/2011 8:48:05 PM

GENERAL SHEET NOTES

REFERENCE KEYNOTES

SHEET KEYNOTES

4D HOME

TEAM NAME:	TEAM MASSACHUSETTS
ADDRESS:	MASSART 621 HUNTINGTON AVE BOSTON MA 02115
CONTACT:	SPENCER CULHANE 602.677.6388 SPENCER.CULHANE@4DHOME.US WWW.4DHOME.US

CONSULTANTS

EPOCH HOMES

PASSIVE HOUSE INSTITUTE US

SLADEN FEINSTEIN INTEGRATED LIGHTING

LEMESSURIER CONSULTANTS, STRUCTURAL ENGINEERS

CLIENT

U.S. DEPARTMENT OF ENERGY

SOLAR DECATHLON 2011

WWW.SOLARDECATHLON.GOV

U.S. DEPARTMENT OF ENERGY SOLAR DECATHLON

MARK	DATE	DESCRIPTION

LOT NUMBER:	NA
DRAWN BY:	SC
CHECKED BY:	PH
COPYRIGHT:	NONE: PROJECT IS PUBLIC DOMAIN

SHEET TITLE

LOT CONDITION ADJUSTMENT DETAILS

C-502

GENERAL LANDSCAPING NOTES

1. REFER TO DESIGN DRAWINGS, DETAILS, SPECIFICATIONS, AND STANDARDS.
2. DO NOT SCALE OR REPLICATE/REINTERPRET DRAWINGS. IN CASE OF QUESTION, CONSULT ARCHITECT.
3. COORDINATE LANDSCAPING WITH ACCESS RAMP/PORCH DESIGN, MATERIALS, AND LOCATIONS.
4. REFER TO SOLAR DECATHLON BUILDING CODE FOR CONSTRAINTS ON LANDSCAPING MATERIALS AND METHODS.
5. ALL PLANTS SHOULD BE ALIVE, HEALTHY, NON INVASIVE, AND NON INTRUSIVE TO THE ACCESS ROUTES
6. COORDINATE WITH CIVIL ENGINEER AND DRAWINGS TO LOCATE AND MARK ALL UTILITY LINES AND CIVIL WORKS BEFORE BEGINNING WORK.
7. ALL MATERIALS ARE TO BE ADA FRIENDLY, FREE OF ANY SHARP/HAZARDOUS ELEMENTS, AND OF CERTIFIED QUALITY INSPECTION.
8. ALL LANDSCAPING MATERIALS AND COMPONENTS MUST NOT INTERFERE WITH, IMPEDE, DAMAGE, OR ADVERSELY EFFECT THE FUNCTION OR QUALITY OF ANY OTHER ARCHITECTURAL, MECHANICAL, ELECTRICAL, PLUMBING, ACCESS, OR UTILITY ELEMENTS.
9. DETAILS NOT SHOWN ARE SIMILAR IN CHARACTER AND DESIGN TO THOSE DETAILED.
10. DISSIMILAR METALS ARE TO BE ISOLATED FROM EACH OTHER WITH A PROPER MATERIAL TO PREVENT CHEMICAL REACTION/BREAKDOWN.
11. WHERE DISCREPANCIES EXIST BETWEEN DRAWINGS AND CONSTRUCTION TRADE PRACTICES, CONSULT ARCHITECT BEFORE PROCEEDING WITH WORK.

GENERAL SHEET NOTES

REFERENCE KEYNOTES

SHEET KEYNOTES

LANDSCAPE
SOLAR DECATHLON
CONSTRUCTION DOCUMENTS

TEAM NAME: TEAM MASSACHUSETTS

ADDRESS: MASSART 621 HUNTINGTON AVE. BOSTON MA 02115

CONTACT: SPENCER CULHANE 602.677.6388 SPENCER.CULHANE@4DHOME.US WWW.4DHOME.US

CONSULTANTS

EPOCH HOMES

PASSIVE HOUSE INSTITUTE US

SLADEN FEINSTEIN INTEGRATED LIGHTING

LEMESSURIER CONSULTANTS, STRUCTURAL ENGINEERS

CLIENT

U.S. DEPARTMENT OF ENERGY

SOLAR DECATHLON 2011

WWW.SOLARDECATHLON.GOV

MARK	DATE	DESCRIPTION

LOT NUMBER: NA

DRAWN BY: SC_FL_EC

CHECKED BY: PH

COPYRIGHT: NONE: PROJECT IS PUBLIC DOMAIN

SHEET TITLE

LANDSCAPE NOTES AND SYMBOLS

L-001

8/12/2011 8:57:49 PM

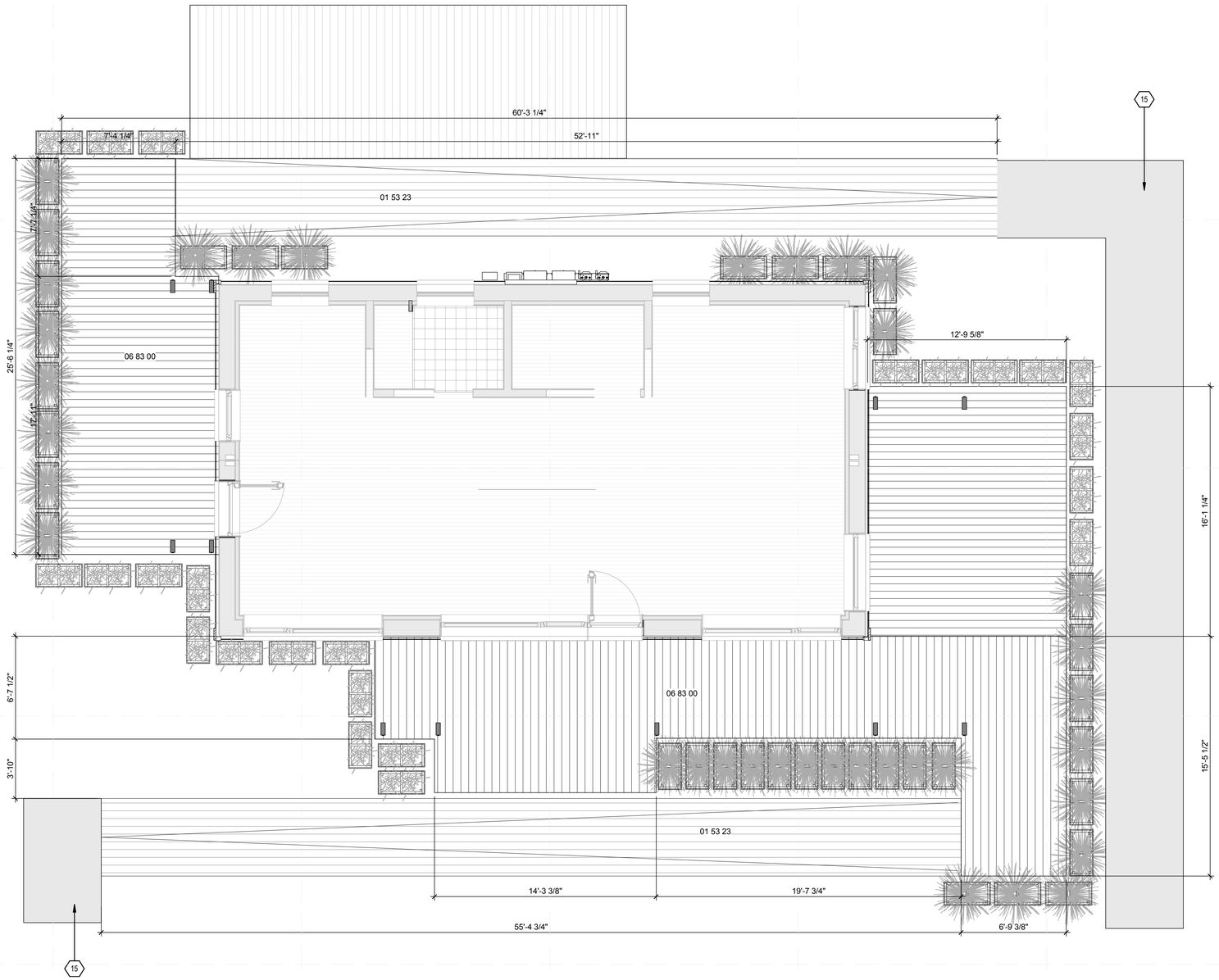

A1 LANDSCAPE PLAN
1/4" = 1'-0"

0 2' 4' 8'

GENERAL SHEET NOTES

1. ALL CONSTRUCTION SHALL CONFORM TO THE DEPARTMENT OF ENERGY SOLAR DECATHLON 2011 BUILDING CODE, THE MOST CURRENT IRC CODE, AS WELL AS THE MASSACHUSETTS STATE BUILDING CODE.
2. CONTRACTOR SHALL BE RESPONSIBLE FOR FINE GRADING AND POSITIVE SURFACE DRAINAGE IN ALL LANDSCAPE AREAS.
3. CONTRACTOR SHALL REMOVE FROM THE SITE AND LEGALLY DISPOSE OF ALL DEBRIS AND UNSUITABLE MATERIAL FROM CONTRUCTION.
4. CONTRACTOR SHALL OBTAIN ALL REQUIRED PERMITS FROM THE RESPONSIBLE JURISDICITIONS PRIOR TO CONSTRUCTION.

REFERENCE KEYNOTES

01 53 23	TEMPORARY RAMPS
06 83 00	COMPOSITE DECKING

SHEET KEYNOTES

15	5'-0" WIDE WALKWAY PROVIDED BY ORGANIZERS

4D HOME

TEAM NAME: TEAM MASSACHUSETTS
ADDRESS: MASSART 621 HUNTINGTON AVE. BOSTON MA 02115
CONTACT: SPENCER CULHANE 602.677.6388 SPENCER.CULHANE@4DHOME.US WWW.4DHOME.US

CONSULTANTS

EPOCH HOMES

PASSIVE HOUSE INSTITUTE US

SLADEN FEINSTEIN INTEGRATED LIGHTING

LEMESSURIER CONSULTANTS, STRUCTURAL ENGINEERS

CLIENT

U.S. DEPARTMENT OF ENERGY

SOLAR DECATHLON 2011

WWW.SOLARDECATHLON.GOV

U.S. DEPARTMENT OF ENERGY SOLAR DECATHLON

MARK	DATE	DESCRIPTION

LOT NUMBER:	NA
DRAWN BY:	SC
CHECKED BY:	PH
COPYRIGHT:	NONE: PROJECT IS PUBLIC DOMAIN

SHEET TITLE

DECK AND RAMP PLAN

L-101

8/12/2011 8:58:27 PM

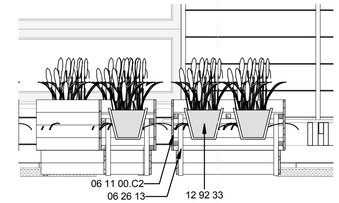

E5 PLANTER BOX DETAIL SECTON
1/2" = 1'-0"

0 1' 2' 4'

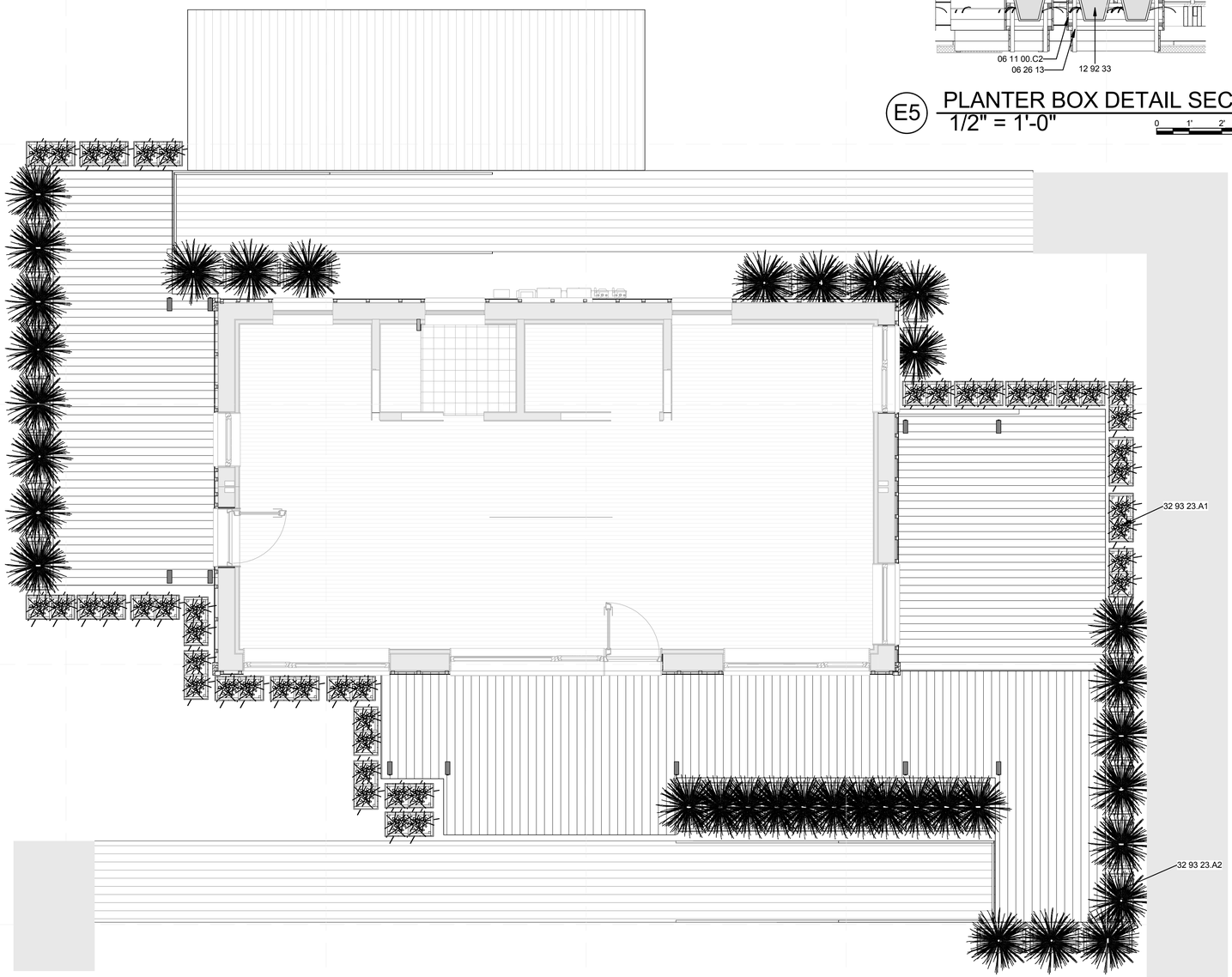

A1 VEGETATION PLAN
1/4" = 1'-0"

0 2' 4' 8'

GENERAL SHEET NOTES

REFERENCE KEYNOTES

06 11 00.C2	2x2
06 26 13	PROFILE BOARD PANELING
12 92 33	INTERIOR PLANTERS
32 93 23.A1	FEATHER REED GRASS
32 93 23.A2	LITTLE BLUE STEM

SHEET KEYNOTES

4D HOME

TEAM NAME:	TEAM MASSACHUSETTS
ADDRESS:	MASSART 621 HUNTINGTON AVE. BOSTON MA 02115
CONTACT:	SPENCER CULHANE 602.677.6388 SPENCER.CULHANE@4DHOME.US WWW.4DHOME.US

CONSULTANTS

EPOCH HOMES

PASSIVE HOUSE INSTITUTE US

SLADEN FEINSTEIN INTEGRATED LIGHTING

LEMESSURIER CONSULTANTS, STRUCTURAL ENGINEERS

CLIENT

U.S. DEPARTMENT OF ENERGY

SOLAR DECATHLON 2011

WWW.SOLARDECATHLON.GOV

U.S. DEPARTMENT OF ENERGY SOLAR DECATHLON

MARK	DATE	DESCRIPTION

LOT NUMBER:	NA
DRAWN BY:	WL
CHECKED BY:	PH
COPYRIGHT:	NONE: PROJECT IS PUBLIC DOMAIN

SHEET TITLE

VEGETATION PLAN

L-102

8/12/2011 8:59:15 PM

GENERAL STRUCTURAL NOTES & SPECIFICATIONS

NARRATIVE

N1- THE UNUSUAL STRESSES OF SHIPPING AND CRANING THE 4D HOME HAVE BECOME DOMINATE FACTORS IN THE DESIGN OF OUR HOUSE'S STRUCTURAL SYSTEM. THE HOUSE WILL BE DIVIDED INTO FOUR MODULES, EACH STRUCTURALLY INDEPENDENT AND DESIGNED TO WITHSTAND THE RIGORS OF SHIPPING AND CRANING.

TWO CENTRAL TRUSSES IN THE ROOF STRUCTURE HAVE BEEN DESIGNED TO ACCOMMODATE THE DYNAMIC SHIPPING AND CRANING STRESSES ON THE MODULES DURING THEIR TRANSPORTATION AND ASSEMBLY. THE OPEN SIDES WILL BE TEMPORARILY BRACED DURING DELIVERY AND CRANING. THESE HORIZONTAL STRESSES OF BRAKING AND ACCELERATION WHILE ON THE TRUCKS AS WELL AS THE LIFTING AND RACKING STRESSES OF CRANING AND THE EVENTUAL LIVE AND DEAD LOADS OF FINAL ASSEMBLY HAVE ALL BEEN ADDRESSED.

THE USE OF THESE TRUSSES IN THE ROOF HAS ALLOWED US TO DISPERSE LOADS EVENLY THROUGHOUT THE BUILDING, AND BECAUSE WE ARE USING THEM IN COMBINATION WITH SHEATHED NI JOIST CONSTRUCTION IN THE WALLS, FLOOR AND ROOF, WE HAVE BEEN ABLE TO ENHANCE THE THERMAL EFFICIENCY OF OUR DESIGN BY MINIMIZING THE COSTLY EFFECTS OF THERMAL BRIDGING. WE HAVE ALSO MANAGED TO KEEP THE CENTRAL TRUSSES IN OUR DESIGN THIN ENOUGH TO REMAIN ELEGANT AND MAINTAIN A FEELING OF OPENNESS WHICH WILL BE ENHANCED BY A LARGE SKYLIGHT AND GABLE ROOF.

THIS EFFICIENT, ROBUST CONSTRUCTION HAS ALLOWED US TO ADDRESS THE RIGOROUS STRUCTURAL STRESSES PLACED ON OUR DESIGN WHILE MEETING PASSIVE HOUSE INSULATION AND ENERGY USE STANDARDS IN THE CREATION OF A PLEASANT, STRUCTURALLY SOUND AND COMFORTABLE HOME.

GENERAL

G1- ALL TYPICAL DETAILS AND NOTES SHOWN ON DRAWINGS SHALL APPLY UNLESS NOTED OTHERWISE. TYPICAL DETAILS MAY NOT NECESSARILY BE INDICATED ON THE PLANS BUT SHALL STILL APPLY AS SHOWN OR DESCRIBED IN THE DETAILS. WHERE TYPICAL DETAILS ARE NOTED ON THE DRAWING, THE SPECIFIED TYPICAL DETAIL SHALL BE USED. WHERE NO DETAIL IS NOTED, IT SHALL BE THE CONTRACTOR'S RESPONSIBILITY TO CHOOSE THE APPROPRIATE TYPICAL DETAIL FROM THOSE PROVIDED. THE CONTRACTOR SHALL SUBMIT ALL PROPOSED ALTERNATE TYPICAL DETAILS TO THOSE PROVIDED WITH RELATED CALCULATIONS TO THE ENGINEER FOR APPROVAL PRIOR TO SHOP DRAWING PRODUCTION AND FIELD USE.

BUILDING CODE

B1- ALL CONSTRUCTION SHALL BE IN ACCORDANCE WITH THE BUILDING CODE. THE PUBLICATIONS LISTED BELOW ARE THE GOVERNING CODES AND STANDARDS AND ARE REFERENCED BY THEIR BASIC DESIGNATION. THE MORE SEVERE CRITERIA SHALL GOVERN.

INTERNATIONAL BUILDING CODE (IBC), 2008 EDITION
MASSACHUSETTS BUILDING CODE (MBC), 2008 EDITION
SOLAR DECATHLON BUILDING CODE (SDBC), LATEST EDITION
AMERICAN SOCIETY FOR TEST MATERIALS (ASTM INTERNATIONAL)

U.S. Department of Energy
Date 6/30/2011

DESIGN LOADS

Structural Design Loads

Submitted By:

LeMessurier Consultants
675 Massachusetts Avenue, Cambridge, MA 02139
Tel: (617)868-1200 Fax: (617)661-7520

Structural Design Loads – In accordance with ASCE 7-05; Minimum Design Loads for Buildings and Other Structures

1. **Dead Loads**
   a. **Weight of Permanent Building Components.....As Required**
2. **Live Loads**
   a. **First Floor.....100psf**
3. **Snow Loads**
   a. **Ground Snow Load.....65psf**
   b. **Flat Roof Snow Load, P_f.....50psf**
   c. **Sloped Roof Snow Load, P_s.....50psf**
   d. **Snow Exposure Factor, C_e.....1.0**
   e. **Roof Slope Factor, C_s.....1.0**
   f. **Snow Load Importance Factor, I.....1.0**
   g. **Thermal Factor, C_t.....1.1**
4. **Wind Loads**
   a. **Basic Wind Speed (Boston, MA).....105mph**
   b. **Importance Factor, I.....1.0**
   c. **Surface Roughness Category.....B**
   d. **Exposure Category.....B**
   e. **Analysis Method.....Method 1 (Simplified Method)**
   f. **Main Wind Force-Resisting System Design Pressures**
      i. **Wall Corner.....19.6psf**
      ii. **Wall Field.....15.7psf**
      iii. **Roof Corner.....13.5psf**
      iv. **Roof Field.....10.8psf**
   g. **Components and Cladding Pressures (based on effective wind area of 20sf)**
      i. **Interior Roof Zone.....(+)17.6psf/(-)18.8psf**
      ii. **Roof End/Ridge Zone.....(+)17.6psf/(-)22.2psf**
      iii. **Roof Corner and Ridge End Zone.....(+)17.6psf/(-)22.2psf**
      iv. **Wall Interior Zone.....(+)18.9psf/(-)20.6psf**
      v. **Wall End Zone.....(+)18.9psf/(-)24.8psf**

LeM File No.: 31079

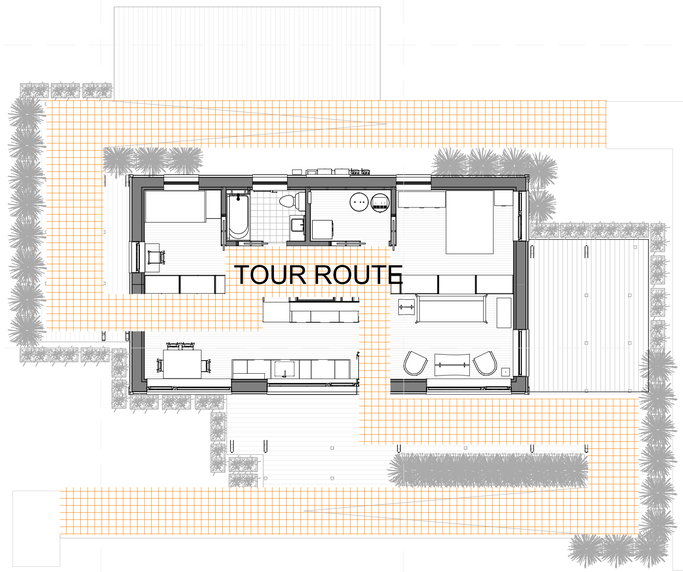

1 TOUR ROUTE FOOTPRINT
1/8" = 1'-0"

STRUCTURAL
SOLAR DECATHLON
CONSTRUCTION DOCUMENTS

GENERAL STRUCTURAL NOTES

1. THE DOCUMENTS INCLUDED IN DRAWING INDEX ARE NOT INTENDED TO BE CONSIDERED IN ISOLATION OF ONE ANOTHER. ALL PARTIES/ENTITIES UTILIZING THESE DOCUMENTS FOR QUANTITY SURVEY AND/OR CONSTRUCTION MUST CONSULT THE GENERAL NOTES AND INFORMATION LOCATED ON THIS SHEET AND ALL "G SERIES SHEETS" (GENERAL INFORMATION AND DATA) FOR INFORMATION AND CONDITIONS GOVERNING WORK DESCRIBED IN DOCUMENTS LISTED IN THE DRAWING INDEX BEFORE ADVANCING WITH CONSTRUCTION. USE COMPLETE SETS OF THE CONSTRUCTION DOCUMENTS IN QUANTIFYING AND CONSTRUCTION. NEITHER THE OWNER NOR ARCHITECT ASSUMES RESPONSIBILITIES FOR ERRORS, OMISSIONS OR MISINTERPRETATIONS RESULTING FROM THE USE OF INCOMPLETE SETS OF CONSTRUCTION DOCUMENTS.
2. CONSTRUCTION, MATERIALS, AND INSTALLATIONS CONFORM TO THE 2011 SOLAR DECATHLON BUILDING CODE AND CONFORM WITH ALL APPLICABLE MUNICIPAL, STATE AND FEDERAL REGULATIONS HAVING JURISDICTION INCLUDING ACCESSIBILITY STANDARDS.
3. DO NOT SCALE. USE ONLY DIMENSIONS CALLED OUT, NOT SCALED DIMENSIONS. CONSULT ARCHITECT WHEN NO DIMENSION IS PROVIDED.
4. REPORT ANY OMISSIONS OR CONFLICTS WITHIN THE DRAWINGS, NOTES, OR DETAILS TO THE ARCHITECT BEFORE PROCEEDING WITH WORK.
5. GRID LINES ARE ORTHOGONAL ON N-S AND E-W AXIS ON BUILDING SITE.
6. PLAN CUT LINE IS TAKEN 4'-0" ABOVE THE FINISHED FLOOR UNLESS NOTED OTHERWISE.
7. ALL ABBREVIATIONS USED ARE REFERENCED FROM THE CONSTRUCTION SPECIFICATION INSTITUTE'S UNIFORM DRAWING SYSTEM TERMS AND ABBREVIATIONS MODULE PUBLISHED IN THE U.S. NATIONAL CAD STANDARD VERSION 4.
8. SUBCONTRACTORS SHALL REVIEW ALL SHEETS AND NOTES FOR INFORMATION PERTINENT TO THEIR WORK WHICH MAY OCCUR IN OTHER PORTIONS OF THE CONTRACT DOCUMENTS.
9. NOTES ON DRAWINGS PERTAIN TO ALL SIMILAR CONDITIONS WHETHER REPEATED OR NOT. DETAILS NOT SHOWN ARE SIMILAR IN CHARACTER TO THOSE SHOWN.
10. THE OWNER WILL NOT ACCEPT REQUESTS FOR EXTRA WORK CONDITIONS WHICH CAN BE REASONABLY ASCERTAINED FROM THE DRAWINGS AND SPECIFICATIONS.
11. NO MATERIALS CONTAINING ASBESTOS MAY BE USED ON THIS PROJECT.
12. REFER TO THE US NATIONAL CAD STANDARD VERSION 4 FOR ALL ABBREVIATIONS. UNLESS OTHERWISE SHOWN OR NOTED, GENERAL NOTES AND TYPICAL DETAILS PERTAIN TO ALL STRUCTURAL FEATURES
13. UNLESS SPECIFICALLY DETAILED ON THE STRUCTURAL DRAWINGS, NO OPENINGS, POCKETS, ETC. ARE TO BE PLACED IN STRUCTURAL MEMBERS. WHEN WORK REQUIRE OPENINGS, POCKETS, ETC. IN STRUCTURAL MEMBERS NOT SHOWN ON STRUCTURAL DRAWINGS NOTIFY THE STRUCTURAL ENGINEER.
14. THE CONTRACTOR MUST APPROVE ALL MANUFACTURED MATERIALS PRIOR TO THEIR USE. ALL REQUIREMENTS OF MATERIAL SHALL BE FOLLOWED.
15. COORDINATING THE WORK OF ALL TRADES WILL BE DONE BY THE CONTRACTOR AS WELL AS VERIFICATIONS OF ALL DIMENSIONS AND HOLES AND OPENINGS REQUIRED IN STRUCTURAL MEMBERS. REPORT ALL DISCREPANCIES TO THE ARCHITECT, THESE MUST BE RESOLVED BEFORE PROCEEDING WITH WORK.
16. THE CONTRACT DOCUMENTS PRESENT THE FINISHED STRUCTURE, NOT THE METHOD OF CONSTRUCTION. THE NECESSARY MEASURES TO PROTECT LIFE AND PROPERTY DURING CONSTRUCTION SHALL BE PROVIDED BY CONTRACTOR, INCLUDING BUT NOT LIMITED TO, BRACING AND SHORING FOR LOADS DUE TO CONSTRUCTION EQUIPMENT AND MATERIALS. THE STRUCTURAL ENGINEER IS NOT RESPONSIBLE TO INSPECT THESE ASPECTS ON SITE VISITS.
17. ALL SAFETY PRECAUTIONS AND THE METHODS, TECHNIQUES, SEQUENCES OR PROCEDURES ARE THE RESPONSIBILITY FOR THE CONTRACTOR NOT THE STRUCTURAL ENGINEER.
18. SPREAD CONSTRUCTION MATERIALS OUT IF PLACED ON FRAMED FLOORS AND ROOFS. DO NOT EXCEED THE DESIGN LIVE LOAD PER SQUARE FOOT WITHOUT PROVIDING ADEQUATE SHORING.
19. FOLLOW MANUFACTURER'S RECOMMENDATIONS FOR ALL STRUCTURAL PRODUCTS USED ON PROJECT UNLESS OTHERWISE NOTED.
20. SUBMIT CONTRACTOR INITIATED CHANGES IN WRITING TO THE ARCHITECT AND STRUCTURAL ENGINEER FOR APPROVAL PRIOR TO FABRICATION OR CONSTRUCTION.
21. ALL LUMBER USED ON PROJECT SHALL HAVE A STRUCTURAL GRADING OR MILL STAMP FROM LUMBER SUPPLIER.

TEAM NAME: TEAM MASSACHUSETTS
ADDRESS: MASSART 621 HUNTINGTON AVE. BOSTON MA 02115
CONTACT: SPENCER CULHANE 602.677.6388 SPENCER.CULHANE@4DHOME.US WWW.4DHOME.US

CONSULTANTS
EPOCH HOMES
PASSIVE HOUSE INSTITUTE US
SLADEN FEINSTEIN INTEGRATED LIGHTING
LEMESSURIER CONSULTANTS, STRUCTURAL ENGINEERS

CLIENT
U.S. DEPARTMENT OF ENERGY
SOLAR DECATHLON 2011
WWW.SOLARDECATHLON.GOV

MARK	DATE	DESCRIPTION

LOT NUMBER:	NA
DRAWN BY:	SC_FL_EC_AD
CHECKED BY:	LC
COPYRIGHT:	NONE: PROJECT IS PUBLIC DOMAIN

SHEET TITLE
STRUCTURAL NOTES AND SYMBOLS

S-001

8/12/2011 9:04:42 PM

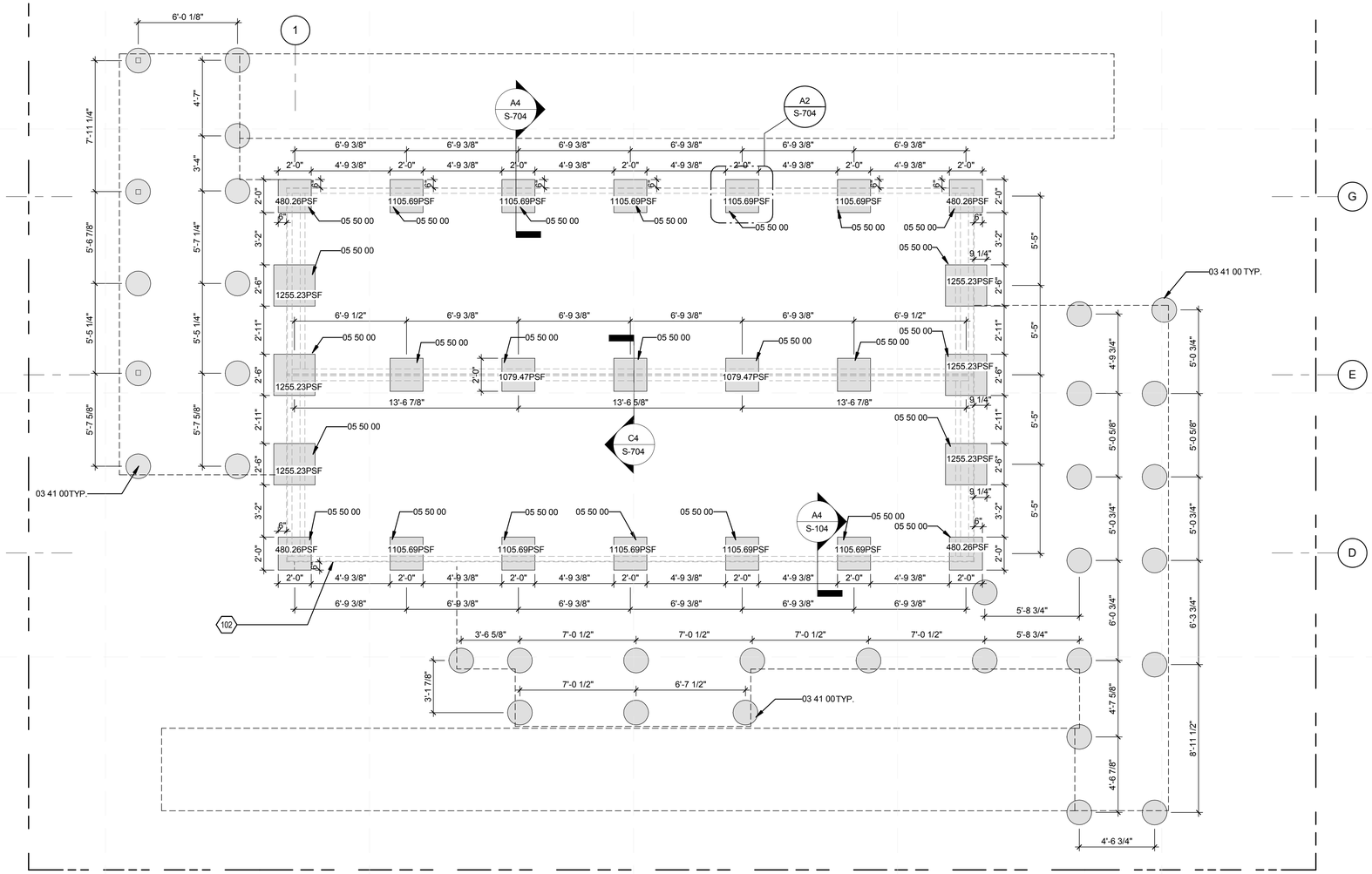

A1 STRUCTURAL FOOTING PLAN
1/4" = 1'-0"

0 2' 4' 8'

8/12/2011 9:04:56 PM

GENERAL SHEET NOTES

1. NO STRUCTURAL ELEMENTS SHALL PENETRATE THE GROUND.
2. LOCATION OF NORTHWEST SITE CORNER DICTATES LOCATION OF BUILDING.

REFERENCE KEYNOTES

03 41 00	PRECAST STRUCTURAL CONCRETE
05 50 00	METAL FABRICATIONS

SHEET KEYNOTES

102	HOUSE PERIMETER

4D HOME

TEAM NAME: TEAM MASSACHUSETTS
ADDRESS: MASSART 621 HUNTINGTON AVE. BOSTON MA 02115
CONTACT: SPENCER CULHANE 602.677.6388 SPENCER.CULHANE@4DHOME.US WWW.4DHOME.US

CONSULTANTS

EPOCH HOMES
PASSIVE HOUSE INSTITUTE US
SLADEN FEINSTEIN INTEGRATED LIGHTING
LEMESSURIER CONSULTANTS, STRUCTURAL ENGINEERS

CLIENT

U.S. DEPARTMENT OF ENERGY
SOLAR DECATHLON 2011
WWW.SOLARDECATHLON.GOV

U.S. DEPARTMENT OF ENERGY SOLAR DECATHLON

MARK	DATE	DESCRIPTION

LOT NUMBER:	NA
DRAWN BY:	SC_FL_AD
CHECKED BY:	LC
COPYRIGHT:	NONE: PROJECT IS PUBLIC DOMAIN

SHEET TITLE

FOUNDATION PLAN

S-101

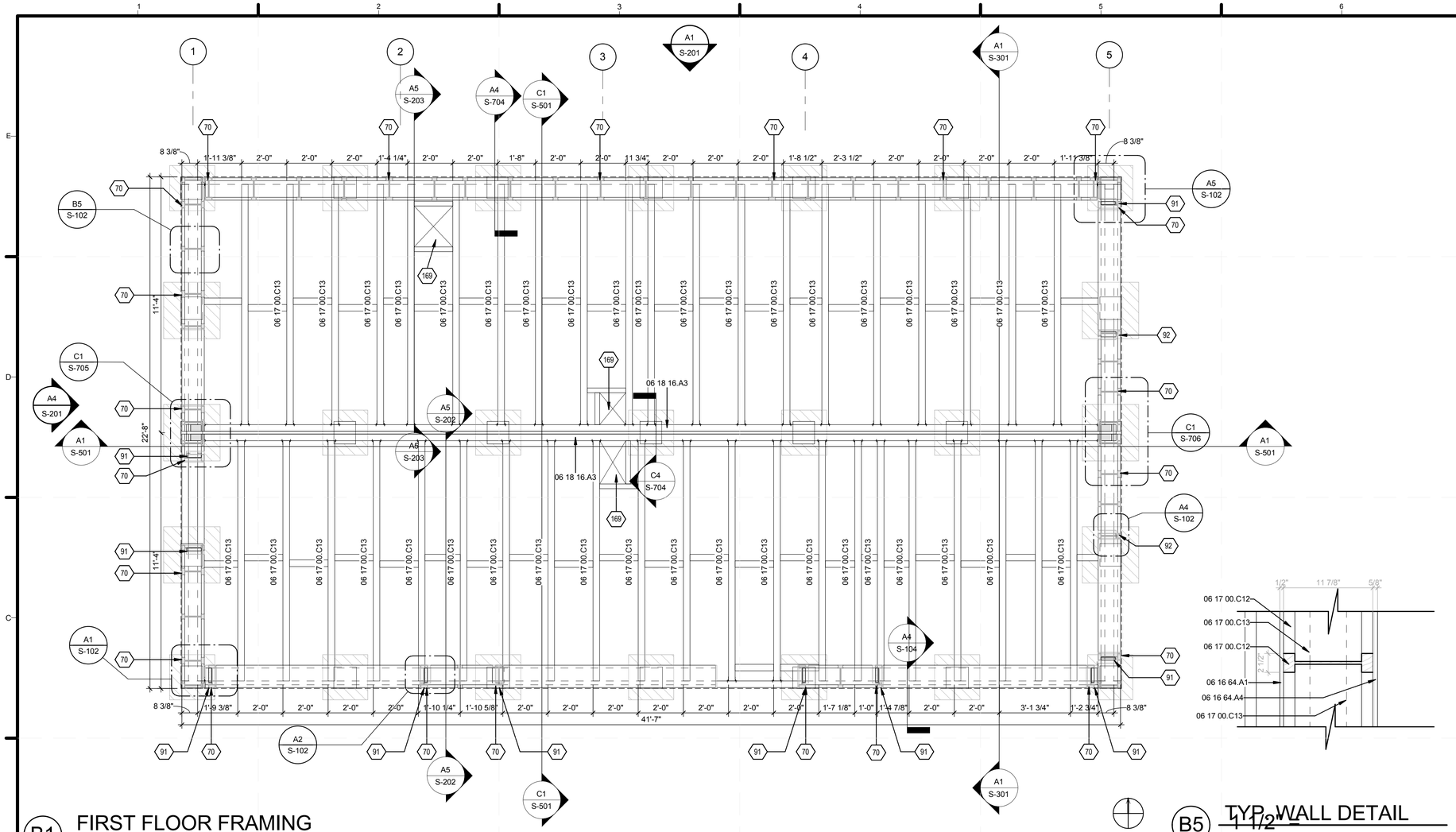

B1 FIRST FLOOR FRAMING
3/8" = 1'-0"

B5 TYP. WALL DETAIL
1 1/2" = 1'-0"

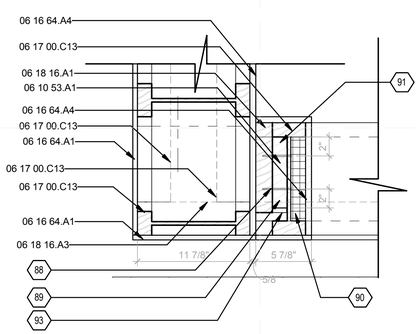

A1 TYP. CORNER FRAMING
1 1/2" = 1'-0"

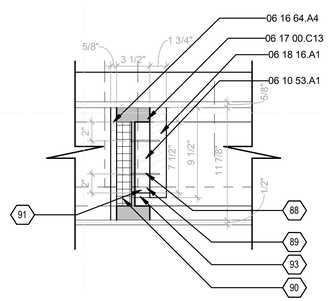

A2 TYP. BUILT UP COLUMN DETAIL
1 1/2" = 1'-0"

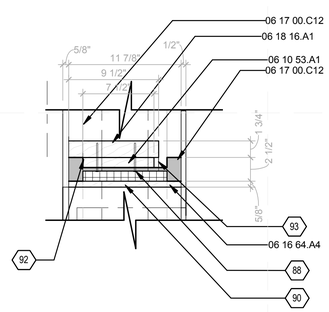

A4 TYP. BUILT UP COLUMN
1 1/2" = 1'-0"

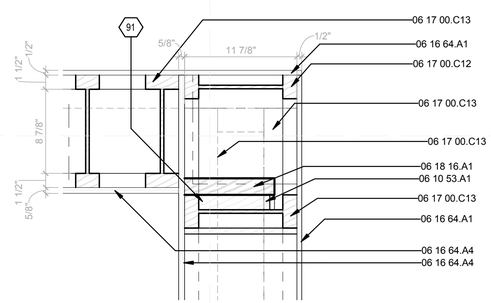

A5 TYP. CORNER FRAMING DETAIL
1 1/2" = 1'-0"

GENERAL SHEET NOTES

1. WALL STUDS ARE 2 1/2" X 11' 7/8" I JOITS UNLESS OTHERWISE NOTED

REFERENCE KEYNOTES

06 10 53.A1	WEB STIFFENER
06 16 64.A1	1/2" HUBERT ZIP SHEATHING
06 16 64.A4	5/8" ADVANTECH SHEATHING
06 17 00.C12	2 1/2" X 11 7/8" NORDIC I JOIST
06 17 00.C13	3 1/2" X 11 7/8" NORDIC I JOIST
06 18 16.A1	1 3/4" X 9 1/2" NORDIC LAM COLUMN
06 18 16.A3	3 1/2" X 11 7/8" NORDIC LAM BEAM

SHEET KEYNOTES

70	3 1/2" x 11-7/8" NORDIC JOIST COLUMN
88	ATTACH I-JOIST TO COLUMN WITH CONSTRUCTION ADHESIVE AND 2 ROWS OF 10d NAILS AT 6" O.C.
89	2x8 WEB FILLER
90	1 1/2" RIGID INSULATION FILLER
91	TYP. BUILT UP COLUMN W/ 3 1/2" X 11 7/8" NORDIC I-JOIST
92	TYP. BUILT UP COLUMN W/ 2 1/2" X 11 7/8" NORDIC I-JOIST
93	WEB FILLER UNDERNEATH COLUMN
169	FLOOR ACCESS

4D HOME

TEAM NAME: TEAM MASSACHUSETTS
ADDRESS: MASSART 621 HUNTINGTON AVE. BOSTON MA 02115
CONTACT: SPENCER CULHANE 602.677.6388 SPENCER.CULHANE@4DHOME.US WWW.4DHOME.US

CONSULTANTS

EPOCH HOMES

PASSIVE HOUSE INSTITUTE US

SLADEN FEINSTEIN INTEGRATED LIGHTING

LEMESSURIER CONSULTANTS, STRUCTURAL ENGINEERS

CLIENT

U.S. DEPARTMENT OF ENERGY

SOLAR DECATHLON 2011

WWW.SOLARDECATHLON.GOV

U.S. DEPARTMENT OF ENERGY SOLAR DECATHLON

MARK	DATE	DESCRIPTION

LOT NUMBER:	NA
DRAWN BY:	SC_FL
CHECKED BY:	LC
COPYRIGHT:	NONE: PROJECT IS PUBLIC DOMAIN

SHEET TITLE

FIRST FLOOR FRAMING PLAN

S-102

8/12/2011 9:05:05 PM

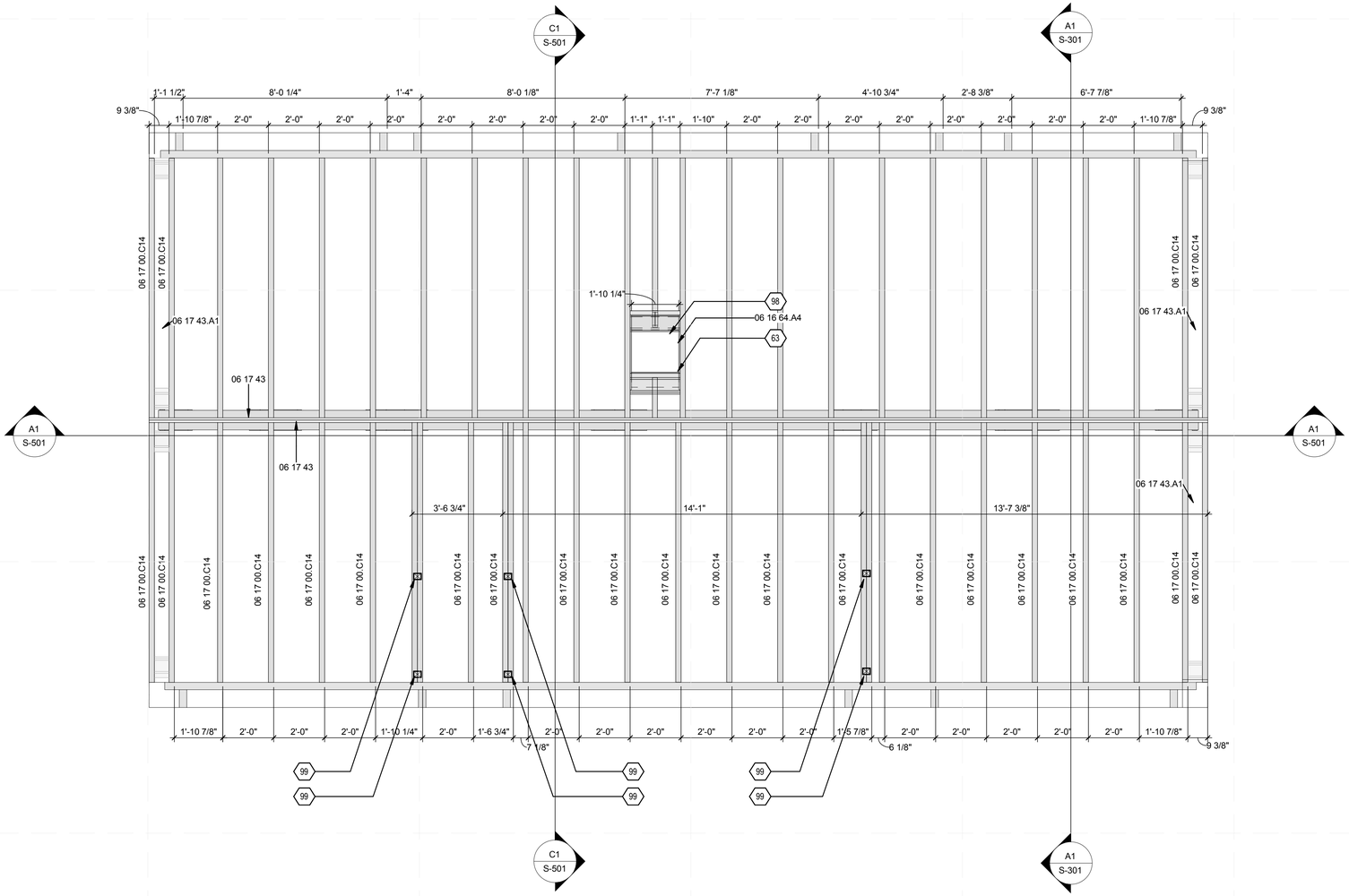

A1 ROOF FRAMING
3/8" = 1'-0"

0 2' 4' 6'

GENERAL SHEET NOTES

REFERENCE KEYNOTES

06 16 64.A4	5/8" ADVANTECH SHEATHING
06 17 00.C14	2 1/2" X 14" NORDIC I JOIST
06 17 43	RIM BOARDS
06 17 43.A1	1 1/8" X 11 7/8" ADVANTECH RIM BOARD

SHEET KEYNOTES

63	1/2" ROUGH OPENING CLEARANCE AROUND FRAME
98	ROTO FRANK SKY LIGHT 21.3" X 30.7"
99	TRELLIS ANCHOR POINT

4D HOME

TEAM NAME:	TEAM MASSACHUSETTS
ADDRESS:	MASSART 621 HUNTINGTON AVE BOSTON MA 02115
CONTACT:	SPENCER CULHANE 602.677.6388 SPENCER.CULHANE@4DHOME.US WWW.4DHOME.US

CONSULTANTS

EPOCH HOMES

PASSIVE HOUSE INSTITUTE US

SLADEN FEINSTEIN INTEGRATED LIGHTING

LEMESSURIER CONSULTANTS, STRUCTURAL ENGINEERS

CLIENT

U.S. DEPARTMENT OF ENERGY

SOLAR DECATHLON 2011

WWW.SOLARDECATHLON.GOV

U.S. DEPARTMENT OF ENERGY SOLAR DECATHLON

MARK	DATE	DESCRIPTION

LOT NUMBER:	NA
DRAWN BY:	SC_FL
CHECKED BY:	PH
COPYRIGHT:	NONE: PROJECT IS PUBLIC DOMAIN

SHEET TITLE

ROOF FRAMING PLAN

S-103

8/12/2011 9:05:09 PM

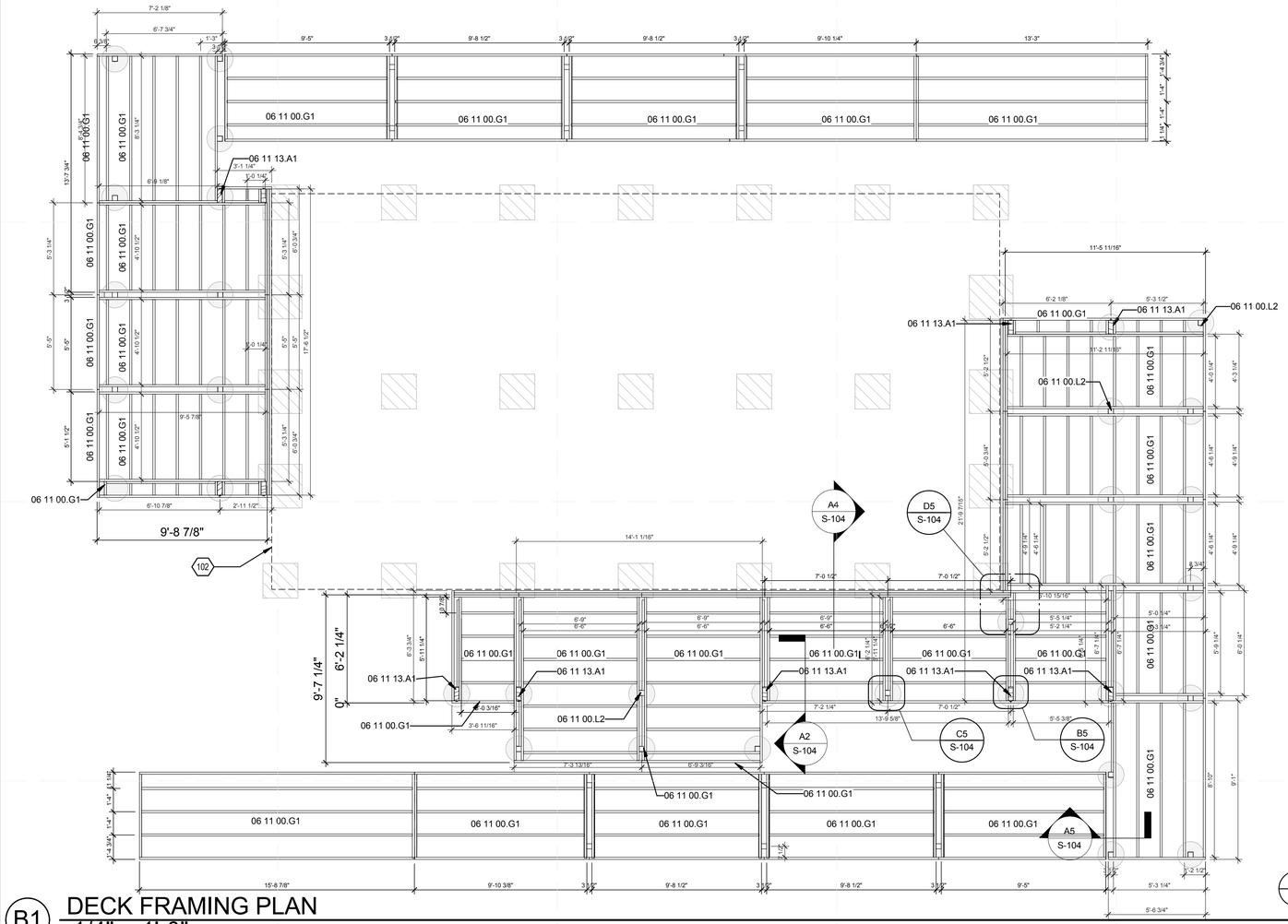

B1 DECK FRAMING PLAN
1/4" = 1'-0"

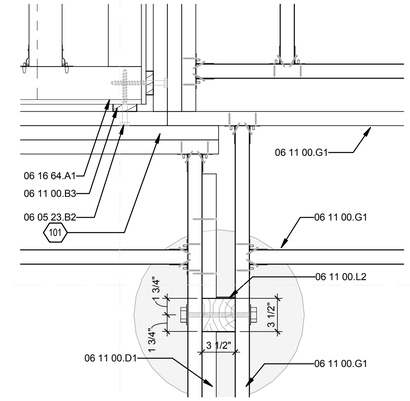

D5 DECK FRAMING DETAIL
1 1/2" = 1'-0"

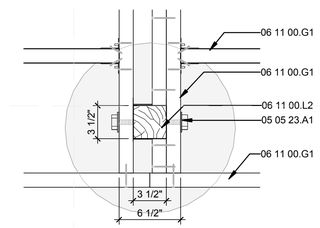

C5 DECK FRAMING PLAN DETAIL
1 1/2" = 1'-0"

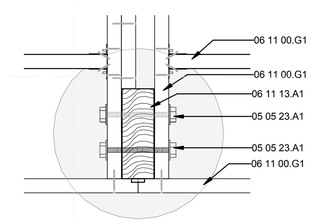

B5 FRAMING TRELLIS CONNECTION
1 1/2" = 1'-0"

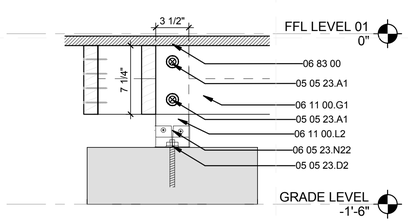

A1 DECK FRAMING POST DETAIL
1 1/2" = 1'-0"

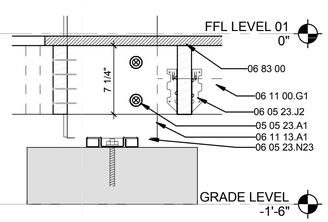

A2 DECK FRAMING TRELLIS CONNECTION
1 1/2" = 1'-0"

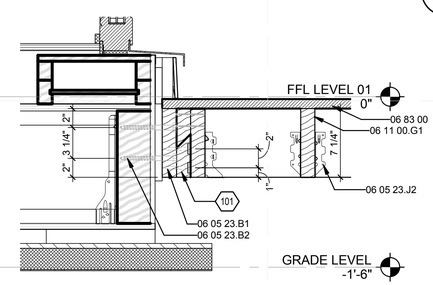

A4 DECKING CONNECTION TO HOUSE
1 1/2" = 1'-0"

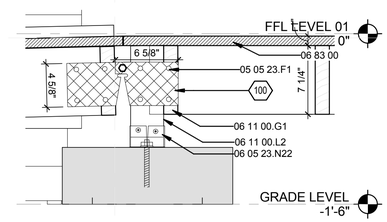

A5 RAMP HINGE DETAIL
1 1/2" = 1'-0"

GENERAL SHEET NOTES

REFERENCE KEYNOTES

05 05 23.A1	1/2" A307 BOLT
05 05 23.D2	1/2" ANCHOR BOLT
05 05 23.F1	3/8" CARRIAGE BOLT
06 05 23.B1	3/8" LAG SCREW
06 05 23.B2	1/2" LAG SCREW
06 05 23.J2	U26
06 05 23.N22	SIMPSON PB44
06 05 23.N23	SIMPSON STRONG TIE ABA 46Z
06 11 00.B3	1X3
06 11 00.D1	2X4
06 11 00.G1	2X8
06 11 00.L2	4X4 POST
06 11 13.A1	4X10 ENGINEERED WOOD
06 16 64.A1	1/2" HUBERT ZIP SHEATHING
06 83 00	COMPOSITE DECKING

SHEET KEYNOTES

100	RAMP HINGE 1/4" PLATE
101	FRENCH CLEAT
102	HOUSE PERIMETER

4D HOME

TEAM NAME: TEAM MASSACHUSETTS
ADDRESS: MASSART 621 HUNTINGTON AVE. BOSTON MA 02115
CONTACT: SPENCER CULHANE 602.677.6388 SPENCER.CULHANE@4DHOME.US WWW.4DHOME.US

CONSULTANTS

EPOCH HOMES

PASSIVE HOUSE INSTITUTE US

SLADEN FEINSTEIN INTEGRATED LIGHTING

LEMESSURIER CONSULTANTS, STRUCTURAL ENGINEERS

CLIENT

U.S. DEPARTMENT OF ENERGY
SOLAR DECATHLON 2011
WWW.SOLARDECATHLON.GOV

U.S. DEPARTMENT OF ENERGY SOLAR DECATHLON

MARK	DATE	DESCRIPTION

LOT NUMBER:	NA
DRAWN BY:	SC_FL_AD
CHECKED BY:	LC
COPYRIGHT:	NONE: PROJECT IS PUBLIC DOMAIN

SHEET TITLE

DECK FRAMING PLAN

S-104

8/12/2011 9:05:18 PM

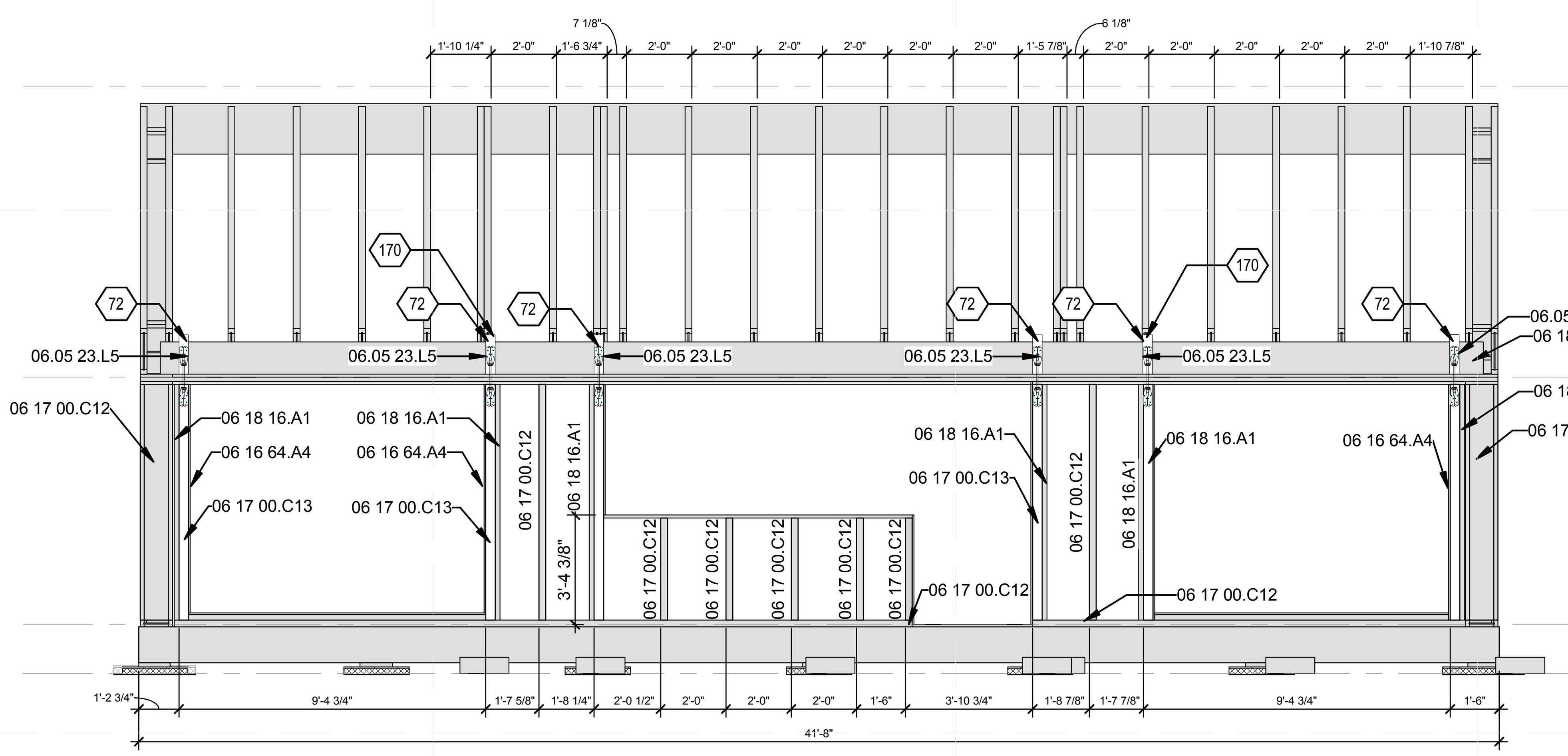

C1 FRAMING ELEVATION OF SOUTH WALL
1/4" = 1'-0"

0 2' 4' 8'

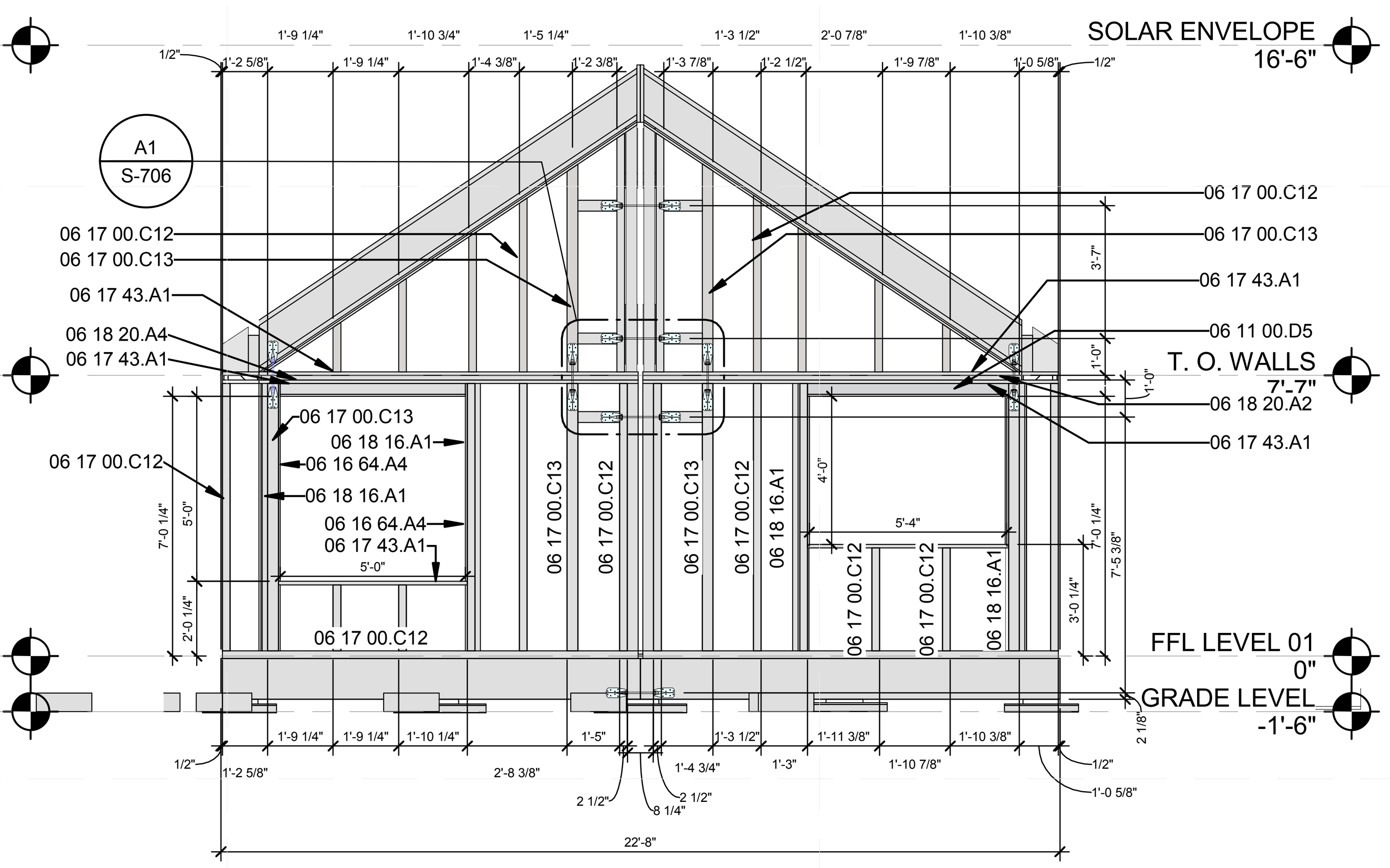

C4 FRAMING ELEVATION OF EAST WALL
1/4" = 1'-0"

0 2' 4' 8'

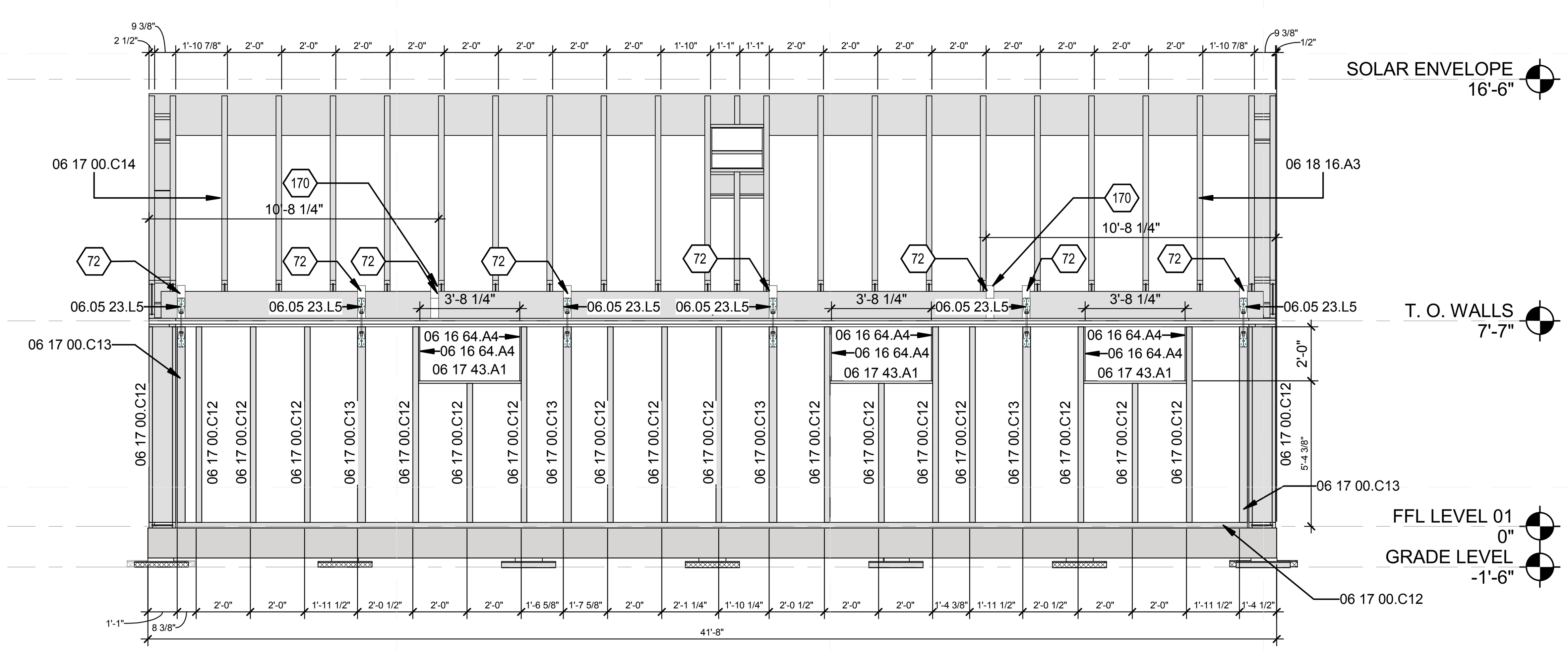

A1 FRAMING ELEVATION OF NORTH WALL
1/4" = 1'-0"

0 2' 4' 8'

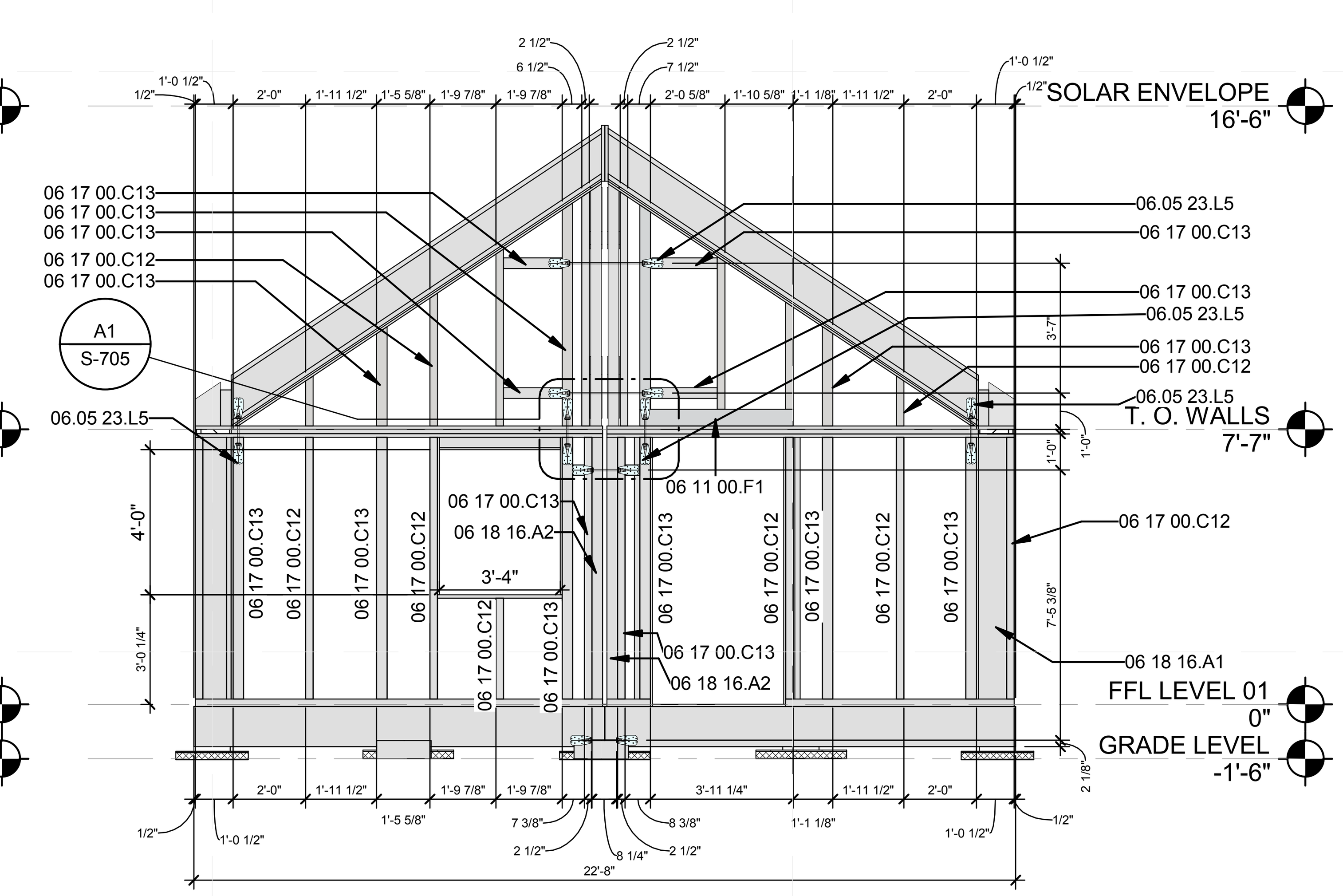

A4 FRAMING ELEVATION OF WEST WALL
1/4" = 1'-0"

0 2' 4' 8'

GENERAL SHEET NOTES

REFERENCE KEYNOTES

06 11 00.D5	2X4 FRAMING @ 16" O.C.
06 11 00.F1	2X6
06 16 64.A4	5/8" ADVANTECH SHEATHING
06 17 00.C12	2 1/2" X 11 7/8" NORDIC I JOIST
06 17 00.C13	3 1/2" X 11 7/8" NORDIC I JOIST
06 17 00.C14	2 1/2" X 14" NORDIC I JOIST
06 17 43.A1	1 1/8" X 11 7/8" ADVANTECH RIM BOARD
06 18 16.A1	1 3/4" X 9 1/2" NORDIC LAM COLUMN
06 18 16.A2	3 1/2" X 7 1/4" NORDIC LAM COLUMN
06 18 16.A3	3 1/2" X 11 7/8" NORDIC LAM BEAM
06 18 20.A2	2 X10 NORDIC ENVIRO LAM
06 18 20.A4	2x6 NORDIC ENVIRO LAM
06.05 23.L5	SIMPSON DTT2Z

SHEET KEYNOTES

72	NORDIC LAM BLOCKING
170	PICK POINT

4D HOME

TEAM NAME: TEAM MASSACHUSETTS

ADDRESS: MASSART 621 HUNTINGTON AVE. BOSTON MA 02115

CONTACT: SPENCER CULHANE 602.677.6388 SPENCER.CULHANE@4DHOME.US WWW.4DHOME.US

CONSULTANTS

EPOCH HOMES

PASSIVE HOUSE INSTITUTE US

SLADEN FEINSTEIN INTEGRATED LIGHTING

LEMESSURIER CONSULTANTS, STRUCTURAL ENGINEERS

CLIENT

U.S. DEPARTMENT OF ENERGY

SOLAR DECATHLON 2011

WWW.SOLARDECATHLON.GOV

U.S. DEPARTMENT OF ENERGY SOLAR DECATHLON

MARK	DATE	DESCRIPTION

LOT NUMBER: NA

DRAWN BY: SC_FL

CHECKED BY: LC

COPYRIGHT: NONE: PROJECT IS PUBLIC DOMAIN

SHEET TITLE

FRAMING ELEVATIONS

S-201

8/12/2011 9:05:28 PM

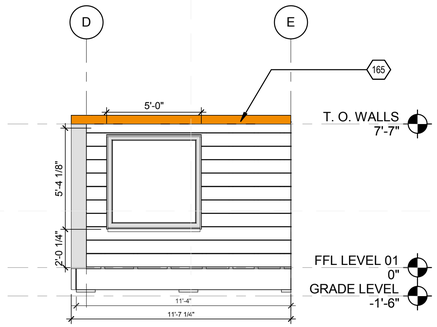

D1 MODULE A EAST ELEVATION
1/4" = 1'-0"

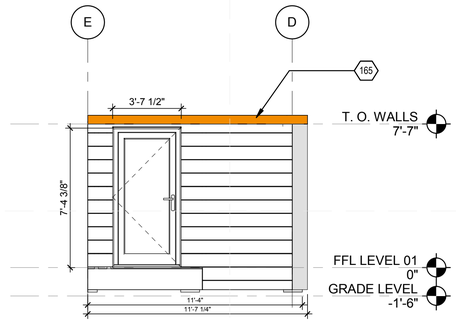

D3 MODULE A WEST ELEVATION
1/4" = 1'-0"

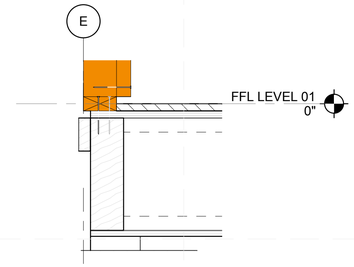

D5 MODULE A BRACING DETAIL A
1 1/2" = 1'-0"

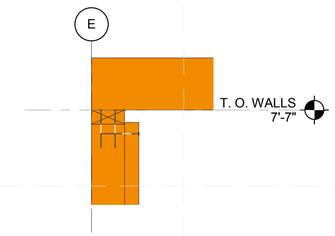

C5 MODULE A BRACING DETAIL B
1 1/2" = 1'-0"

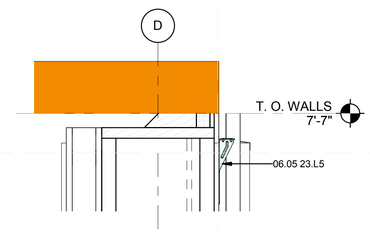

B5 MODULE A BRACING DETAIL C
1 1/2" = 1'-0"

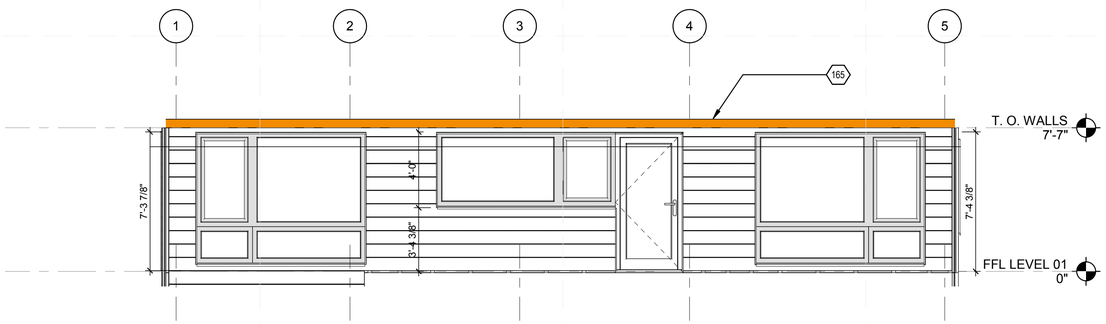

B1 MODULE A SOUTH ELEVATION
1/4" = 1'-0"

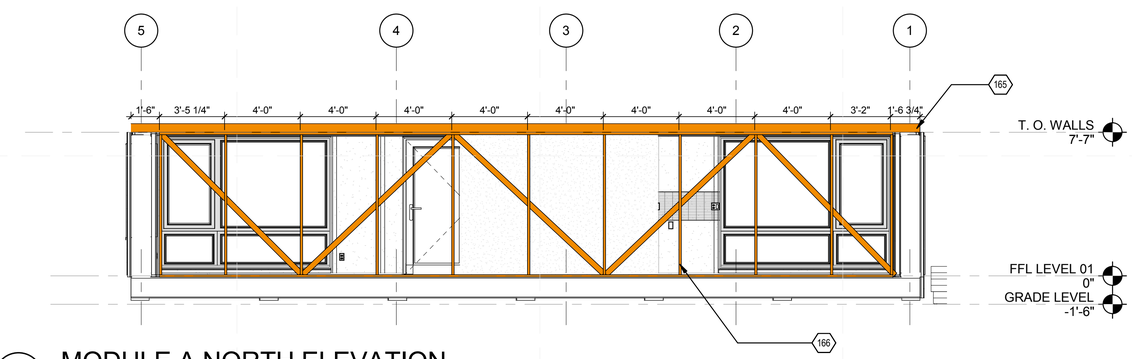

A1 MODULE A NORTH ELEVATION
1/4" = 1'-0"

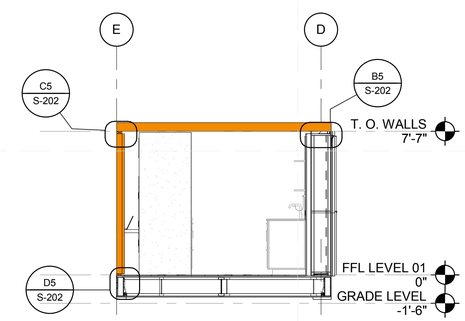

A5 LATERAL BRACING MODULE A
1/4" = 1'-0"

GENERAL SHEET NOTES

REFERENCE KEYNOTES

06.05 23.L5 SIMPSON DTT2Z

SHEET KEYNOTES

165 2X6 24" O.C. TEMPORARY BRACING
166 2X4 TEMPORARY BRACING

TEAM NAME: TEAM MASSACHUSETTS
ADDRESS: MASSART 621 HUNTINGTON AVE. BOSTON MA 02115
CONTACT: SPENCER CULHANE 602.677.6388 SPENCER.CULHANE@4DHOME.US WWW.4DHOME.US

CONSULTANTS

EPOCH HOMES
PASSIVE HOUSE INSTITUTE US
SLADEN FEINSTEIN INTEGRATED LIGHTING
LEMESSURIER CONSULTANTS, STRUCTURAL ENGINEERS

CLIENT

U.S. DEPARTMENT OF ENERGY
SOLAR DECATHLON 2011
WWW.SOLARDECATHLON.GOV

MARK	DATE	DESCRIPTION

LOT NUMBER:	NA
DRAWN BY:	FL
CHECKED BY:	LC
COPYRIGHT:	NONE: PROJECT IS PUBLIC DOMAIN

SHEET TITLE

MODULE BRACING

S-202

8/12/2011 9:05:41 PM

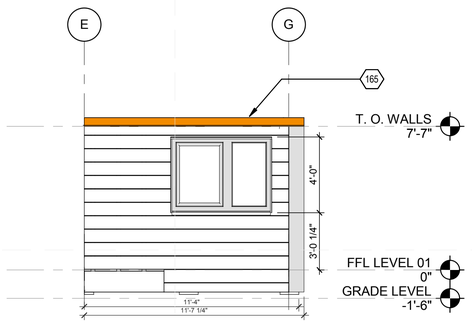

D1 MODULE B EAST ELEVETION
1/4" = 1'-0"

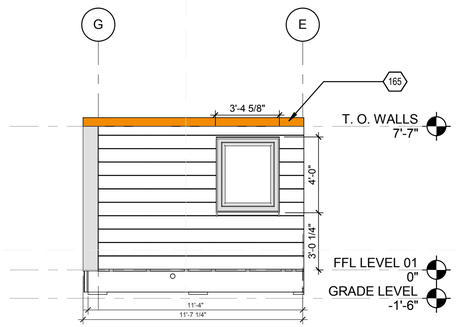

D4 MODULE B WEST ELEVATION
1/4" = 1'-0"

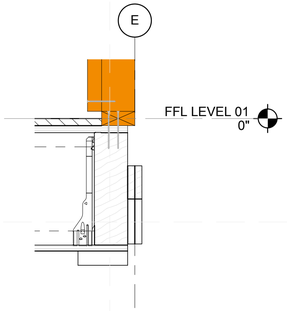

D5 MODULE B BRACING DETAIL A
1 1/2" = 1'-0"

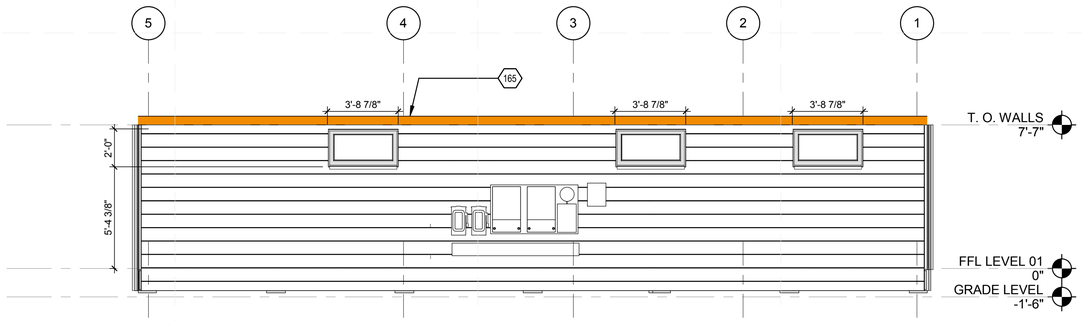

B1 MODULE B NORTH ELEVATION
1/4" = 1'-0"

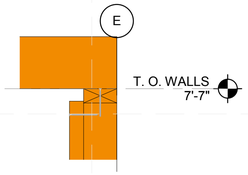

C5 MODULE B BRACING DETAIL B
1 1/2" = 1'-0"

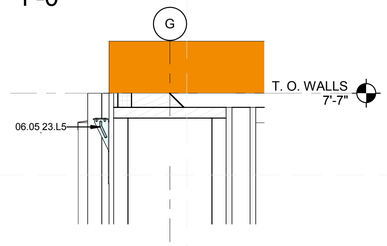

B5 MODULE B BRACING DETAIL C
1 1/2" = 1'-0"

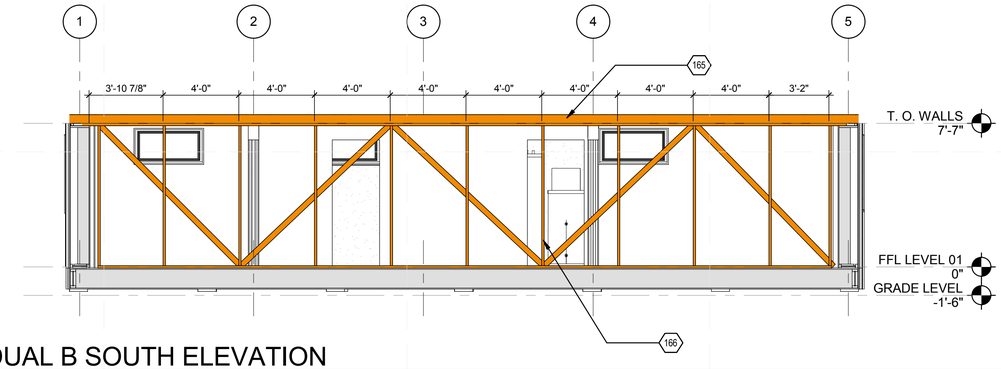

A1 MODUAL B SOUTH ELEVATION
1/4" = 1'-0"

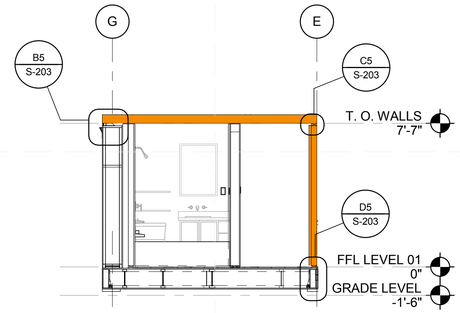

A5 LATERAL BRACING MODULE B
1/4" = 1'-0"

GENERAL SHEET NOTES

REFERENCE KEYNOTES

06.05.23.L5 SIMPSON DTT2Z

SHEET KEYNOTES

165 2X6 24" O.C. TEMPORARY BRACING
166 2X4 TEMPORARY BRACING

4D HOME

TEAM NAME: TEAM MASSACHUSETTS
ADDRESS: MASSART 621 HUNTINGTON AVE. BOSTON MA 02115
CONTACT: SPENCER CULHANE 602.677.6388 SPENCER.CULHANE@4DHOME.US WWW.4DHOME.US

CONSULTANTS

EPOCH HOMES
PASSIVE HOUSE INSTITUTE US
SLADEN FEINSTEIN INTEGRATED LIGHTING
LEMESSURIER CONSULTANTS, STRUCTURAL ENGINEERS

CLIENT

U.S. DEPARTMENT OF ENERGY
SOLAR DECATHLON 2011
WWW.SOLARDECATHLON.GOV

U.S. DEPARTMENT OF ENERGY SOLAR DECATHLON

MARK	DATE	DESCRIPTION

LOT NUMBER:	NA
DRAWN BY:	FL
CHECKED BY:	LC
COPYRIGHT:	NONE: PROJECT IS PUBLIC DOMAIN

SHEET TITLE

MODULE BRACING

S-203

8/12/2011 9:05:52 PM

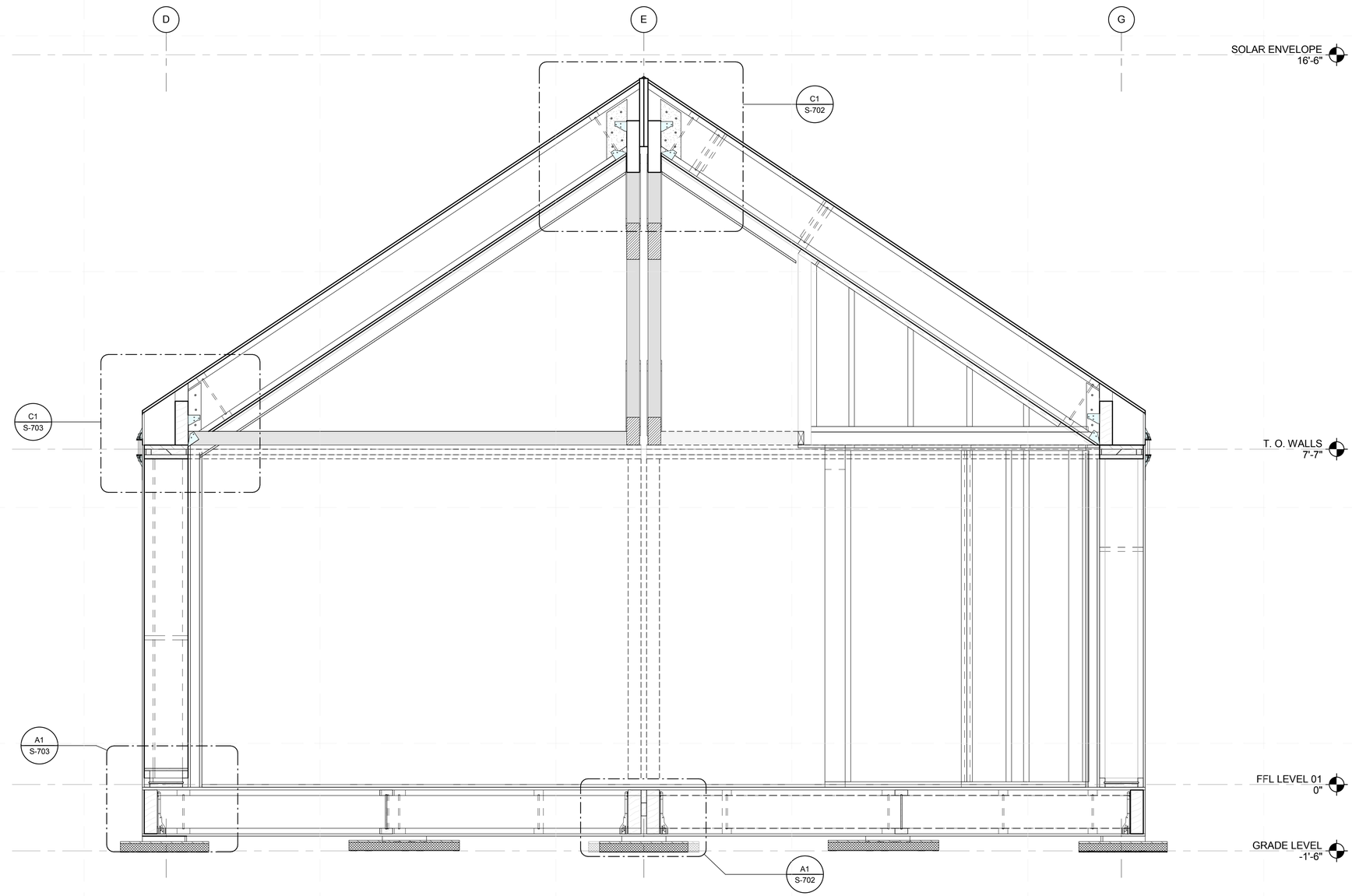

A1 STRUCTURAL TRANSVERSE SECTION
3/4" = 1'-0"

0 2' 4' 6'

8/12/2011 9:06:01 PM

TEAM NAME:	TEAM MASSACHUSETTS
ADDRESS:	MASSART 621 HUNTINGTON AVE. BOSTON MA 02115
CONTACT:	SPENCER CULHANE 602.677.6388 SPENCER.CULHANE@4DHOME.US WWW.4DHOME.US

CONSULTANTS

EPOCH HOMES

PASSIVE HOUSE INSTITUTE US

SLADEN FEINSTEIN INTEGRATED LIGHTING

LEMESSURIER CONSULTANTS, STRUCTURAL ENGINEERS

CLIENT

U.S. DEPARTMENT OF ENERGY

SOLAR DECATHLON 2011

WWW.SOLARDECATHLON.GOV

MARK	DATE	DESCRIPTION

LOT NUMBER:	NA
DRAWN BY:	SC_FL
CHECKED BY:	LC
COPYRIGHT:	NONE: PROJECT IS PUBLIC DOMAIN

SHEET TITLE

FRAMING SECTIONS

S-301

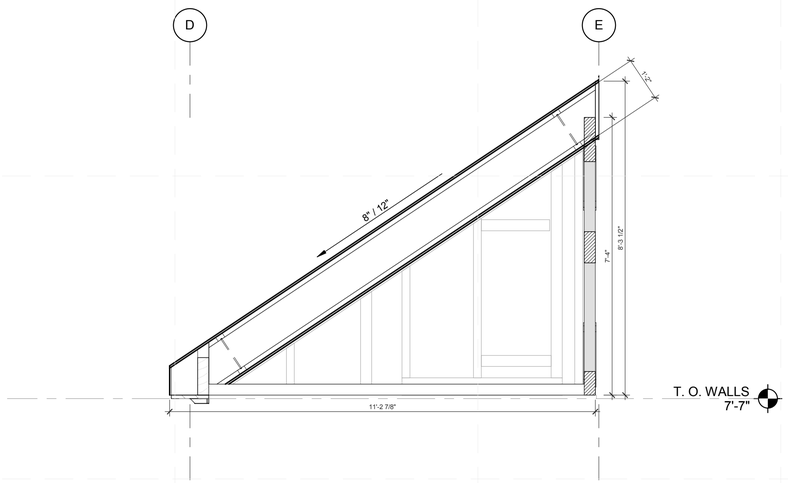

C1 MODULE A SECTION
1/2" = 1'-0"

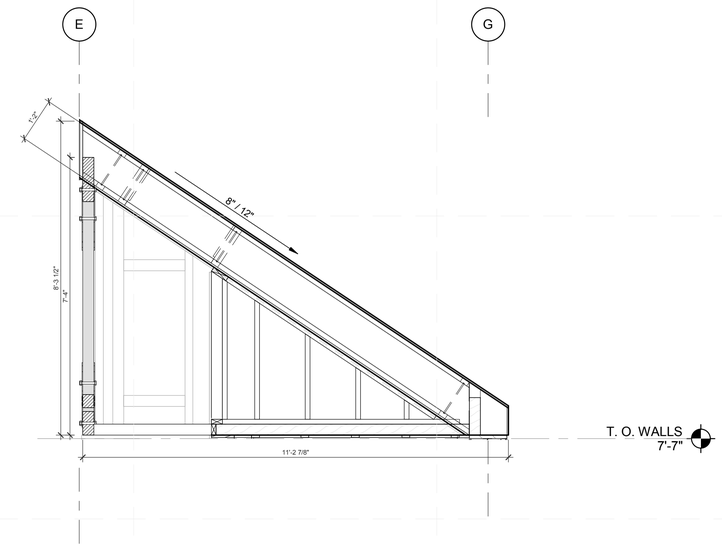

C4 MODULE B SECTION
1/2" = 1'-0"

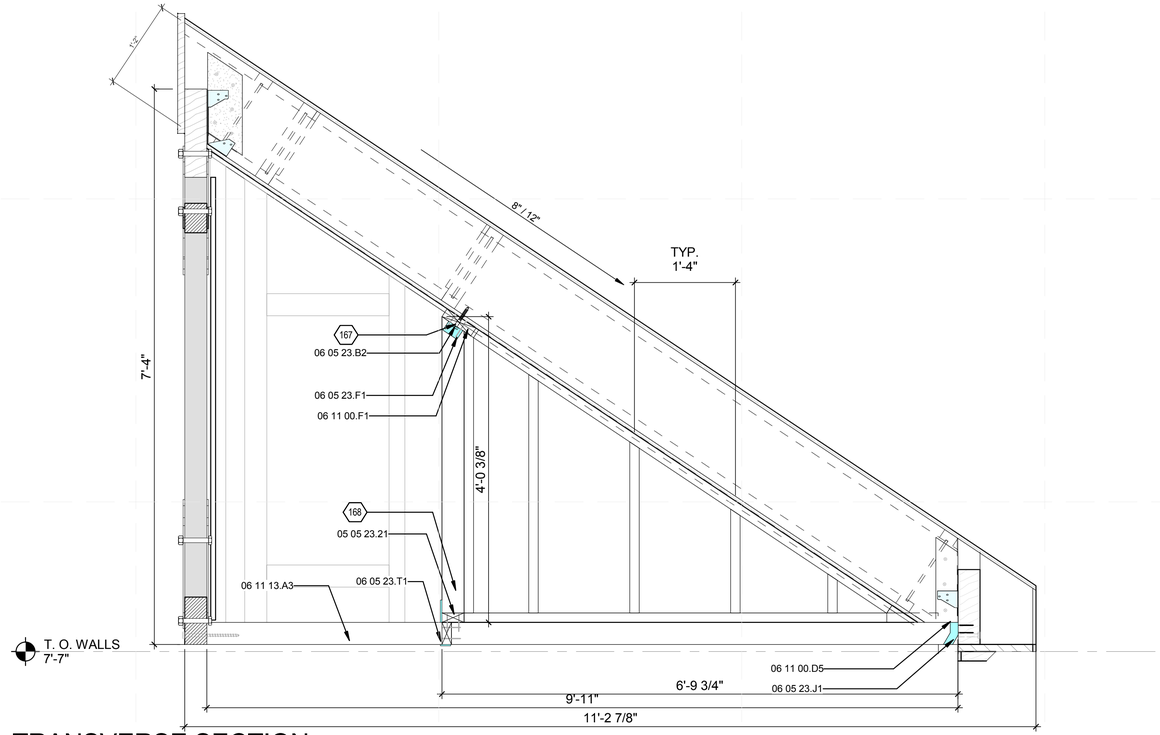

A2 TRANSVERSE SECTION
1" = 1'-0"

GENERAL SHEET NOTES

REFERENCE KEYNOTES

05 05 23.21	2X4 PLATE
06 05 23.B2	1/2" LAG SCREW
06 05 23.F1	A34
06 05 23.J1	U24
06 05 23.T1	COIL STRAP
06 11 00.D5	2X4 FRAMING @ 16" O.C.
06 11 00.F1	2X6
06 11 13.A3	ENGINEERED WOOD COLLAR TIE

SHEET KEYNOTES

167	24" O.C.
168	2X4 24" O.C. OFFSET FROM LAG SCREWS

4D HOME

TEAM NAME: TEAM MASSACHUSETTS
ADDRESS: MASSART 621 HUNTINGTON AVE. BOSTON MA 02115
CONTACT: SPENCER CULHANE 602.677.6388 SPENCER.CULHANE@4DHOME.US WWW.4DHOME.US

CONSULTANTS

EPOCH HOMES

PASSIVE HOUSE INSTITUTE US

SLADEN FEINSTEIN INTEGRATED LIGHTING

LEMESSURIER CONSULTANTS, STRUCTURAL ENGINEERS

CLIENT

U.S. DEPARTMENT OF ENERGY

SOLAR DECATHLON 2011

WWW.SOLARDECATHLON.GOV

U.S. DEPARTMENT OF ENERGY SOLAR DECATHLON

MARK	DATE	DESCRIPTION

LOT NUMBER:	NA
DRAWN BY:	FL
CHECKED BY:	LC
COPYRIGHT:	NONE: PROJECT IS PUBLIC DOMAIN

SHEET TITLE

ROOF MODULE DETAILS

S-302

8/12/2011 9:06:10 PM

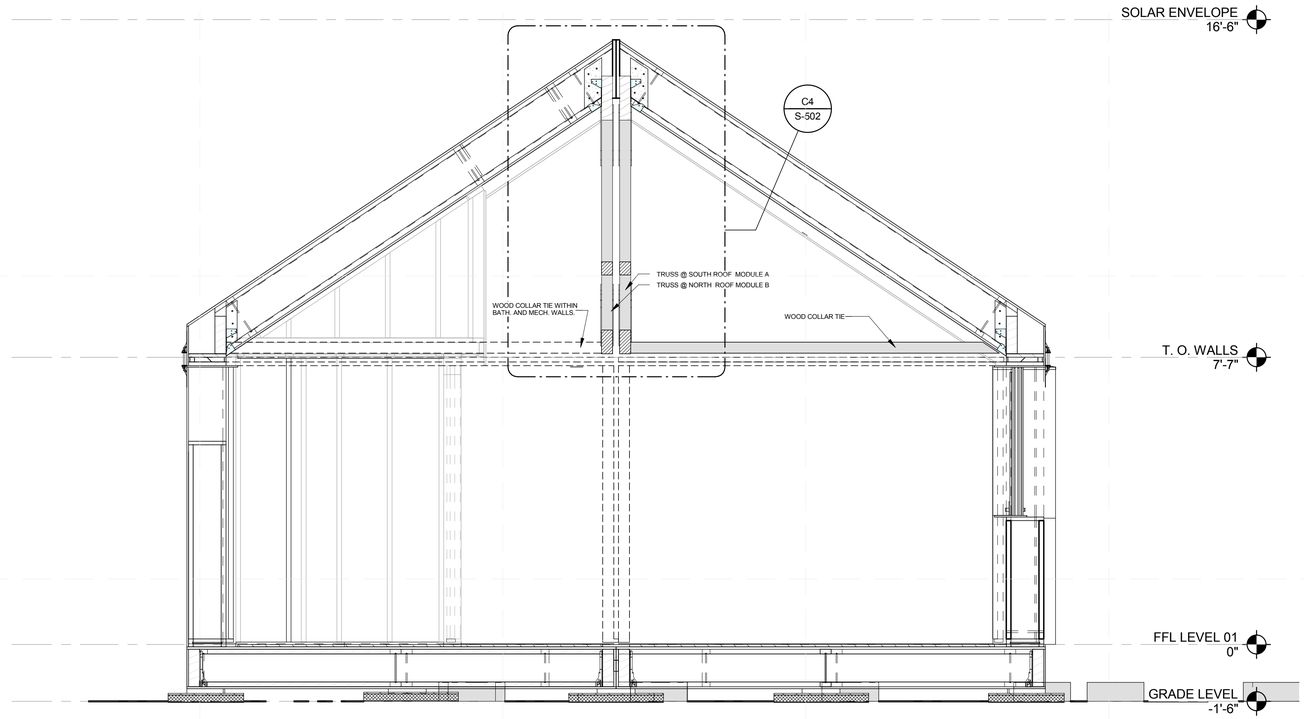

C1 TRANSVERSE SECTION
1/2" = 1'-0"

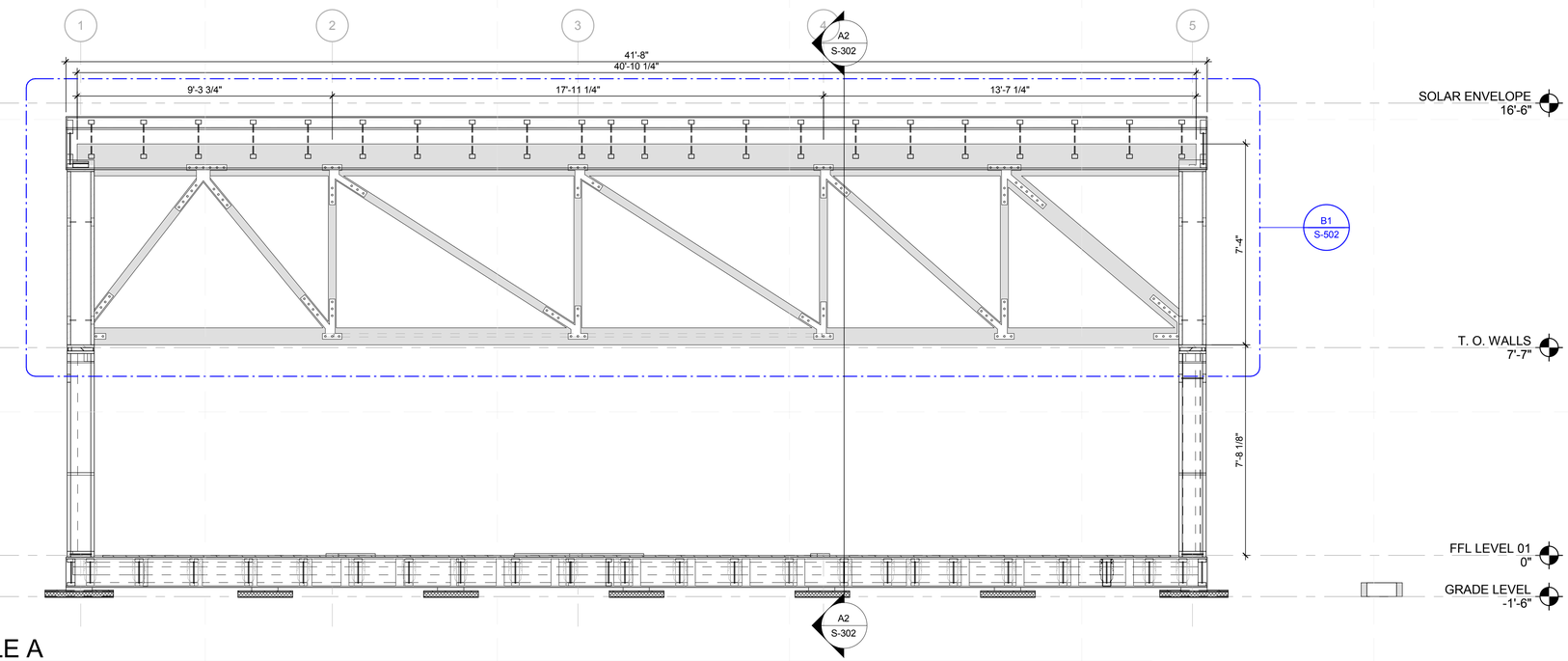

A1 TRUSS AT MODULE A
3/8" = 1'-0"

8/12/2011 9:06:21 PM

TEAM NAME:	TEAM MASSACHUSETTS
ADDRESS:	MASSART 621 HUNTINGTON AVE. BOSTON MA 02115
CONTACT:	SPENCER CULHANE 602.677.6388 SPENCER.CULHANE@4DHOME.US WWW.4DHOME.US

CONSULTANTS

EPOCH HOMES

PASSIVE HOUSE INSTITUTE US

SLADEN FEINSTEIN INTEGRATED LIGHTING

LEMESSURIER CONSULTANTS, STRUCTURAL ENGINEERS

CLIENT

U.S. DEPARTMENT OF ENERGY

SOLAR DECATHLON 2011

WWW.SOLARDECATHLON.GOV

U.S. DEPARTMENT OF ENERGY SOLAR DECATHLON

MARK	DATE	DESCRIPTION

LOT NUMBER:	NA
DRAWN BY:	FL
CHECKED BY:	LC
COPYRIGHT:	NONE: PROJECT IS PUBLIC DOMAIN

SHEET TITLE

TRUSS

S-501

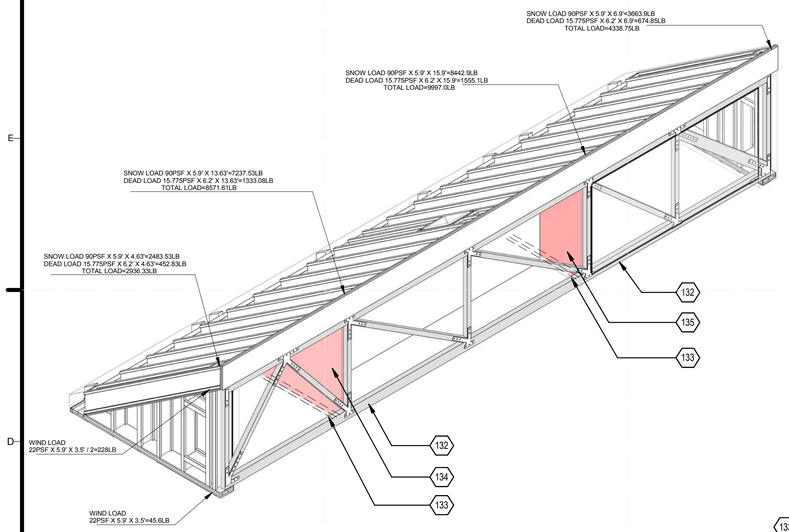

C1 ROOF MODULE B TRUSS ISOMETRIC

NOT TO SCALE

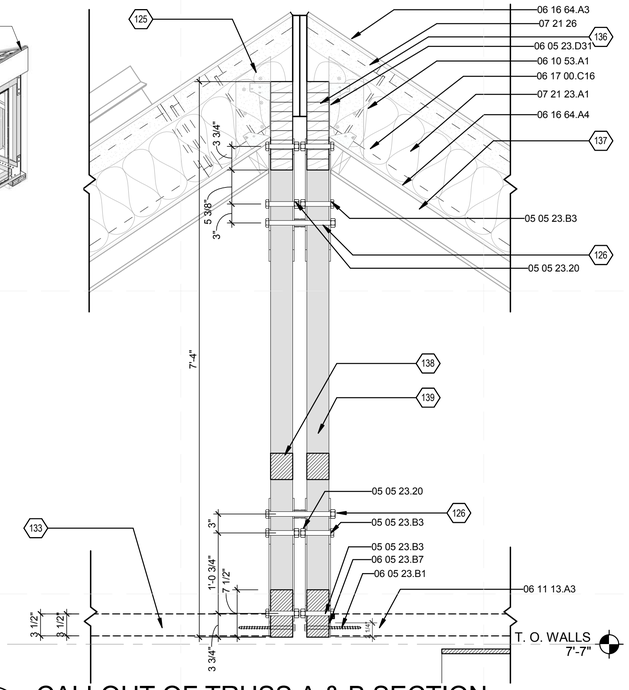

C4 CALLOUT OF TRUSS A & B SECTION

1" = 1'-0"

0 1/2' 1' 2'

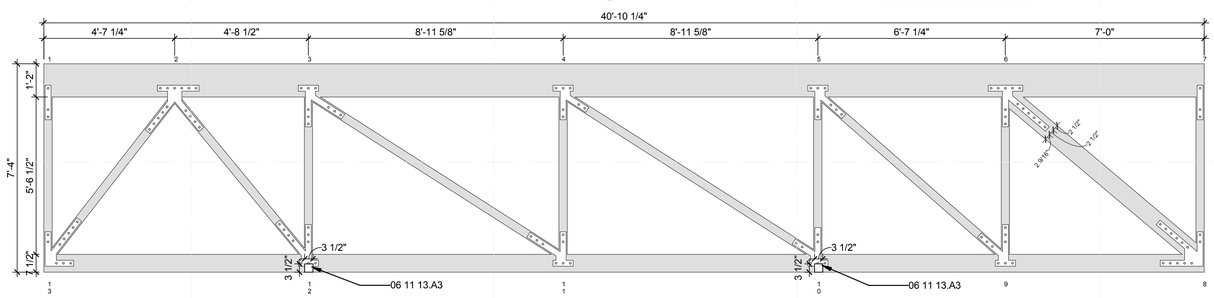

B1 TRUSS AT ROOF MODULE A ELEVATION

3/8" = 1'-0"

0 2' 4' 6'

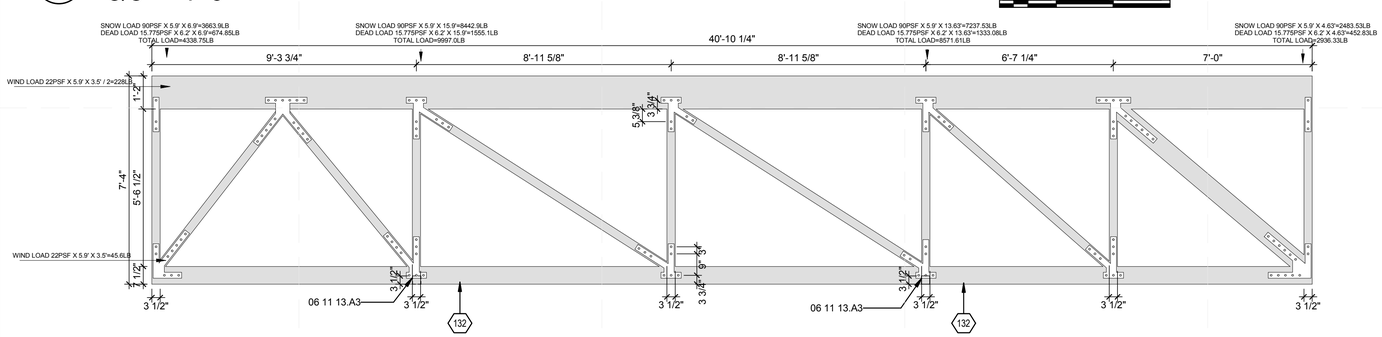

A1 TRUSS AT ROOF MODULE B ELEVATION

3/8" = 1'-0"

0 2' 4' 6'

LOADING (PSF)	SPACING 5-5-11
TCLL 90.0	BOLT INCREASE 1.15
TCDL 25.0	LUMBER INCREASE 1.15
BCLL 0.0	REP STRESS INCR. NO
BCDL 10.0	CODE IRC2009

CSI		DEFL	in	(loc)	l/defl	l/d
TC	0.48	VERT(LL)	-0.29	10-11	>999	240
BC	0.97	VERT(TL)	-0.53	10-11	>915	180
WB	1.00	HORZ(TL)	0.16	8	n/a	n/a
(MATRIX)						

LUMBER
TOP CHORD NORDIC 24F 3.5" X 14"
BOT CHORD NORDIC 24F 3.5" X 7.5"
WEBS NORDIC 24F 3.5" X 3.5" EXCEPT
6-8: 2X4 NORDIC 24F 3.5" X 7.5"

BRACING
TOP CHORD 2-0-0 OC PU~INS (6-0-0 MAX.), EXCEPT END VERTICALS
BOT CHORD BRACES AT JOINTS 10 AND 12
ATTACH 4X4 LATERAL BRACE WITH (2)
3/8" X 9" LAG SCREWS THROUGH TRUSS
BOTTOM CHORD AND INTO END GRAIN OF 4X4 BRACE.

REACTIONS (lb/size) *13=13877/0-7-4* (min. 0-2-7), *8=1387710-7-4* (min. 0-2-7)
MAX UPLIFT 13=-1862(lC 3), 8=-1862(lC 3)

FORCES (l b) • **Maximum Compression/Maximum Tension**
TOP CHORD ***1-13***=*-1147/196,* ***1-2***=*-68/4,* ***2-3***=*-15435/2060,* ***3-4***=*-21869/2936,* ***4-5***=*-19458/2611 ,* ***5-6***=*-12814/1718,* ***6-7***=*-5 1/5 ,* ***7-8***=*-1671/291*
BOT CHORD ***12-13***=*-1195/8703,* ***11-12***=*-2060/15435,* ***10-11***=*-2936/21869,* ***9-10***=*-2611 /19458,* ***8-9***=*-1718/12814*
WEBS ***2-13***=*-15182/2095,* ***3-12***=*8674/1349,* ***3-11***=*-1079n924,* ***5-10***=*-106/2157,* ***6-8***=*-17522/2352,* ***4-10***=*-2969/400,* ***6-9***=*-751 /6854, 5-9=-9286/1248,* ***2-12***=*-1466/11416,* ***4-11***=*-4185/783*

PLATES ARE *1/4"* THICK ASTM A 36 STEEL
BOLTS ARE *3/4"* FULL DIAMETER WITH A
BENDING YIELD STRENGTH OF 45,000 PSI

GENERAL SHEET NOTES

1. 1) 3/4" BOLTS (ASTM A-307) SHALL BE PLACED IN MAXIMUM 13/16" AND MINIMUM 29/32" DIAMETER HOLES. HOLES SHALL BE ACCURATELY ALIGNED IN MAIN MEMBERS AND SIDE PLATES. BOLTS SHALL NOT BE FORCIBLY DRIVEN; ALL BOLTS SHALL HAVE A FULL NUT WITH FULL THREAD CONTA CT. DO NOT OVER TIGHTEN BOLTS. TIGHTEN BOLTS TO SNUG FIT PLUS QUATER TURN MAXIMUM.
2. THIS TRUSS HAS BEEN CHECKED FOR UNIFORM ROOF LIVE LOAD ONLY, EXCEPT AS NOTED.
3. WIND: ASCE 7-05; 120MPH; TCDL=6.0PSF; BCDL=6.0PSF; H=25FT; CAT. II; EXP C; ENCLOSED; MWFRS (LOW-RISE); LUMBER DOL=1 .60 PLATE GRIP DOL=1 .60
4. PROVIDE MECHANICAL CONNECTION (BY OTHERS) OF TRUSS TO BEARING PLATE CAPABLE OF WITHSTANDING 1862 IB UPLIFT AT JOINT 13 AND 1862 IB UPLIFT AT JOINT 8.
5. THIS TRUSS IS DESIGNED IN ACCORDANCE WITH THE 2009 INTERNATIONAL BUILDING CODE.
6. 3/4" BOLTS SHALL BE SPACED AT 3" C/C IN A ROW. END DISTANCE SHALL BE 5.25" FROM CENTER LINE OF LAST BOLT TO END OF MEMBER; 1/4" PLATE SHALL BE A MINIMUM OF 2.5" WIDE. PLATE END SHALL BE 1.25" FROM CENTER LINE OF LAST BOLT. CENTER LINE OF BOLTS IN THE TOP CHORD AND BOTTOM CHORD SHALL BE 3.75 UP FROM THE BOTTOM EDGE OF THE TOP AND BOTTOM CHORDS. CENTER LINE OF BOLTS IN ALL WEBS AND END VERTICALS SHALL BE 1.875" FROM THE EDGE OF THE MEMBER. [illegible]

REFERENCE KEYNOTES

05 05 23.20	STEEL SLEEVE
05 05 23.B3	3/4" A325 BOLT
06 05 23.B1	3/8" LAG SCREW
06 05 23.B7	3.25" X 2.375" 1/4" SPACER
06 05 23.D31	SIMPSON LSSUH310 HANGER
06 10 53.A1	WEB STIFFENER
06 11 13.A3	ENGINEERED WOOD COLLAR TIE
06 11 13.A4	NORDIC LAM BEAM 3 1/2" X 11 7/8"
06 16 64.A3	5/8" HUBERT ZIP SHEATHING
06 16 64.A4	5/8" ADVANTECH SHEATHING
06 17 00.C16	14" NORDIC NI-40X I JOIST
06 17 00.C17	11 7/8" NORDIC NI-40X I JOIST
06 17 00.C18	WALL PLATE 11 7/8" NORDIC NI-40X I JOIST
06 17 00.C19	11 7/8" NORDIC NI-80 I JOIST
06 17 43	RIM BOARDS
06 17 43.A2	RIM BOARD 11/8" X 11 7/8"
06 18 20.A5	NORDIC ENVIRO WALL KEYWAY
07 21 23.A1	BLOWN-IN FIBERGLASS INSULATION
07 21 26	SEALED INSULATION

SHEET KEYNOTES

125	2X6 BEVELED CUT BEARING STIFFENER REQUIRED EACH SIDE
126	FIELD CONNECTION 3/8" BOLTS
129	SOLE PLATE WEB FILLER
132	PICK POINT 10'-2" FROM CARRYING 1/4 OF ROOF SECTION LOAD, SECTION LOAD 9530/4=2382.5 ONLY DURING CRANING
133	ENGINEERED WOOD COLLAR TIE WITHIN BATH. AND MECH. WALLS
134	CHILD'S BED/BATHROOM PARTITION WALL
135	MASTER BEDROOM/ MECH. ROOM PARTITION WALL
136	PRE-ENGINEERED "GIRDER" TRUSS
137	2X4 CEILING FRAMING AT 24" O.C. WITH 1/2 GYPSUM
138	TRUSS AT NORTH ROOF MODULE
139	TRUSS AT SOUTH ROOF MODULE
140	NORDIC I JOIST NI-80 11 7/8" FOR FASTENING DTT2Z HOLD DOWNS
141	NORDIC LAM COLUMN 3 1/2" X 7 1/2" FASTENED TO NI-40X JOIST COLUMN
142	TRUSS
143	NORDIC I JOIST NI-80 11 7/8" BLOCKING FOR FASTENING DTT2Z HOLD DOWNS

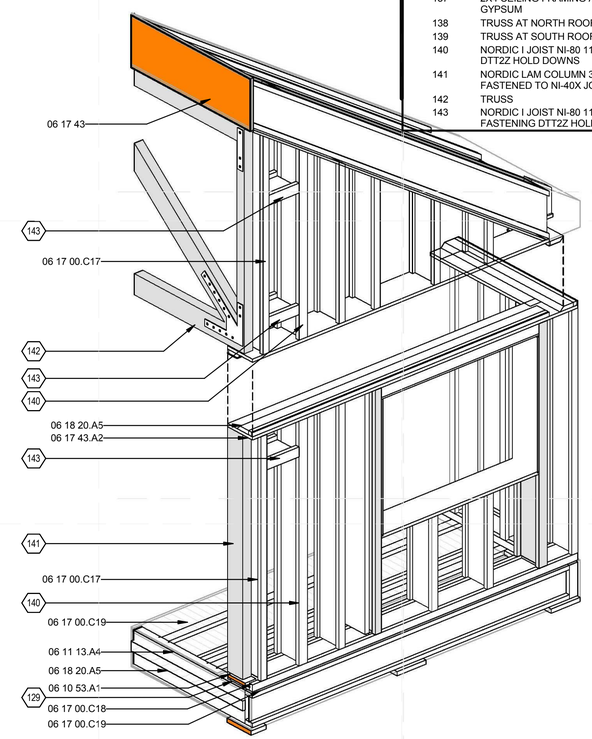

A5 EAST MODULE WALLTRUSS ISOMETRIC 2

NOT TO SCALE

4D HOME

TEAM NAME:	TEAM MASSACHUSETTS
ADDRESS:	MASSART 621 HUNTINGTON AVE. BOSTON MA 02115
CONTACT:	SPENCER CULHANE 602.677.6388 SPENCER.CULHANE@4DHOME.US WWW.4DHOME.US

CONSULTANTS

EPOCH HOMES

PASSIVE HOUSE INSTITUTE US

SLADEN FEINSTEIN INTEGRATED LIGHTING

LEMESSURIER CONSULTANTS, STRUCTURAL ENGINEERS

CLIENT

U.S. DEPARTMENT OF ENERGY

SOLAR DECATHLON 2011

WWW.SOLARDECATHLON.GOV

U.S. DEPARTMENT OF ENERGY SOLAR DECATHLON

MARK	DATE	DESCRIPTION

LOT NUMBER:	NA
DRAWN BY:	FL
CHECKED BY:	LC
COPYRIGHT:	NONE: PROJECT IS PUBLIC DOMAIN

SHEET TITLE

TRUSS

S-502

8/12/2011 9:06:41 PM

STRUCTURAL FRAMING SCHEDULE

Keynote	Length	Model	OmniClass Number	Type	Count
05 16 00			23.25.30.11.14.14	1/4 DIAMETER STEEL CABLE"	14
06 11 00.B3			23.25.30.11.14.14	1X3	99
	6'-10 1/2"		23.25.30.11.14.14	1x4 decking	1
68			23.25.30.11.14.14	2x2	12
			23.25.30.11.14.14	2x3	89
			23.25.30.11.14.14	2x3 2	4
06 11 00.D5			23.25.30.11.14.14	2x4	105
06 11 00.F1			23.25.30.11.14.14	2x6	3
			23.25.30.11.14.14	2x6 FLAT	15
06 11 00.G1			23.25.30.11.14.14	2x8	288
	4'-9"		23.25.30.11.14.14	2x8 FLAT	6
			23.25.30.11.14.14	2x8 modify	2
			23.25.30.11.14.14	2x10	20
06 18 20.A2			23.25.30.11.14.14	2x10	6
			23.25.30.11.14.14	3 X 1	89
06 18 16.A3			23.25.30.11.14.14	3-1/2"X11 7/8"	6
06 18 16.A5			23.25.30.11.14.14	3-3/8"x9-1/2" 2	27
06 17 43.A1			23.25.30.11.14.14	3/4x11 7/8 plate	3
06 17 43.A1	12'-4 1/2"		23.25.30.11.14.14	3/4x11 7/8 plate	1
			23.25.30.11.14.14	Advantec 5/8" Sheathing	3
	2'-11 1/2"		23.25.30.11.14.14	Advantec 5/8" Sheathing 14"	2
06 16 64.A4			23.25.30.11.14.14	ADVANTEC SHEATHING 5/8"	4
06 17 43.A1			23.25.30.11.14.14	HUBER Advantec Rim Board 1-1/8" x 11-7/8"	19
06 17 43	41'-5 3/4"		23.25.30.11.14.14	HUBER Advantec RIM Board dim Roof Ridge	2
06 11 00.I1			23.25.30.11.14.14	HUBER ADVANTECH RIM BOARD 11 7/8"	25
	3'-2"		23.25.30.21.17.11	NORDIC 2 1/2 "x14"	1
06 18 20.A4			23.25.30.11.14.14	NORDIC ENVIROWALL 2X6	6
06 17 00.C14			23.25.30.21.17.11	NORDIC NI-40x 14" Rafter	52
06 17 00.C3			23.25.30.21.17.11	NORDIC NI-40x 14" skylight frame	10
			23.25.30.21.17.11	NORDIC NI-40x-11 7/8"-BLOCKING	6
06 17 00.C12			23.25.30.21.17.11	NORDIC NI-40x-11 7/8"- SOLE PLATE	9
06 17 00.C13			23.25.30.21.17.11	NORDIC NI-80-11 7/8"-FLOOR JOIST	104
06 17 13			23.25.30.11.14.14	Nordic RIMAT wall 8 7/8"	9
			23.25.30.11.14.14	WEB_STIFFENER	16

GENERAL SHEET NOTES

REFERENCE KEYNOTES

SHEET KEYNOTES

TEAM NAME: TEAM MASSACHUSETTS

ADDRESS: MASSART 621 HUNTINGTON AVE. BOSTON MA 02115

CONTACT: SPENCER CULHANE 202.677.6388 SPENCER.CULHANE@4DHOME.US WWW.4DHOME.US

CONSULTANTS

EPOCH HOMES

PASSIVE HOUSE INSTITUTE US

SLADEN FEINSTEIN INTEGRATED LIGHTING

LEMESSURIER CONSULTANTS, STRUCTURAL ENGINEERS

CLIENT

U.S. DEPARTMENT OF ENERGY

SOLAR DECATHLON 2011

WWW.SOLARDECATHLON.GOV

MARK	DATE	DESCRIPTION

LOT NUMBER: NA

DRAWN BY: AUTHOR

CHECKED BY: CHECKER

COPYRIGHT: NONE: PROJECT IS PUBLIC DOMAIN

SHEET TITLE

REINFORCING AND FRAMING SCHEDULES

S-601

8/12/2011 9:06:46 PM

STRUCTURAL COLUMN SCHEDULE

Length	OmniClass Number	Type	Description	Keynote	Count
3'-3 1/4"	23.25.30.11.14.11	2x3		06 11 00.L2	4
3'-3 5/8"	23.25.30.11.14.11	2x3		06 11 00.L2	1
3'-4 1/4"	23.25.30.11.14.11	2x3		06 11 00.L2	1
5'-3 1/4"	23.25.30.11.14.11	2x3		06 11 00.L2	4
7'-5 1/4"	23.25.30.11.14.11	2x3		06 11 00.L2	52
9 7/8"	23.25.30.11.14.11	2x4		06 11 00.L2	2
1'-5 7/8"	23.25.30.11.14.11	2x4		06 11 00.L2	2
2'-3 7/8"	23.25.30.11.14.11	2x4		06 11 00.L2	2
3'-3 7/8"	23.25.30.11.14.11	2x4		06 11 00.L2	2
3'-11 7/8"	23.25.30.11.14.11	2x4		06 11 00.L2	2
7'-5 1/4"	23.25.30.11.14.11	2x4		06 11 00.L2	4
7'-0 3/4"	23.25.30.11.14.11	2x6		06 11 00.L2	4
7'-5 7/8"	23.25.30.11.14.11	2x6		06 11 00.L2	22
1'-0 1/4"	23.25.30.11.14.11	3 3/8" X 9 1/2"		06 11 13.A1	1
8'-4"	23.25.30.11.14.11	3 3/8" X 9 1/2"		06 11 13.A1	7
8'-6"	23.25.30.11.14.11	3 3/8" X 9 1/2"		06 11 13.A1	2
9'-3 3/4"	23.25.30.11.14.11	3 3/8" X 9 1/2"		06 11 13.A1	1
9'-6"	23.25.30.11.14.11	3 3/8" X 9 1/2"		06 11 13.A1	1
9 1/2"	23.25.30.11.14.11	4x4		06 11 00.L2	1
10 1/2"	23.25.30.11.14.11	4x4		06 11 00.L2	4
10 3/4"	23.25.30.11.14.11	4x4		06 11 00.L2	2
1'-0"	23.25.30.11.14.11	4x4		06 11 00.L2	3
1'-0 1/2"	23.25.30.11.14.11	4x4		06 11 00.L2	1
1'-2"	23.25.30.11.14.11	4x4		06 11 00.L2	8
1'-2 1/2"	23.25.30.11.14.11	4x4		06 11 00.L2	6
1'-3"	23.25.30.11.14.11	4x4		06 11 00.L2	12
7'-2 5/8"	23.25.30.11.14.11	4x8		06 18 16.A2	4
2'-0"	23.25.30.11.14.11	HUBER ADVANTECH SHEATHING 5/8" x 11 7/8"		06 16 64.A4	6
3'-4 3/8"	23.25.30.11.14.11	HUBER ADVANTECH SHEATHING 5/8" x 11 7/8"		06 16 64.A4	1
4'-0"	23.25.30.11.14.11	HUBER ADVANTECH SHEATHING 5/8" x 11 7/8"		06 16 64.A4	2
4'-0 1/2"	23.25.30.11.14.11	HUBER ADVANTECH SHEATHING 5/8" x 11 7/8"		06 16 64.A4	1
4'-4 1/8"	23.25.30.11.14.11	HUBER ADVANTECH SHEATHING 5/8" x 11 7/8"		06 16 64.A4	2
5'-4 1/8"	23.25.30.11.14.11	HUBER ADVANTECH SHEATHING 5/8" x 11 7/8"		06 16 64.A4	2
7'-0"	23.25.30.11.14.11	HUBER ADVANTECH SHEATHING 5/8" x 11 7/8"		06 16 64.A4	2
7'-2 5/8"	23.25.30.11.14.11	HUBER ADVANTECH SHEATHING 5/8" x 11 7/8"		06 16 64.A4	2
7'-4 3/8"	23.25.30.11.14.11	HUBER ADVANTECH SHEATHING 5/8" x 11 7/8"		06 16 64.A4	1
7'-5 1/8"	23.25.30.11.14.11	HUBER ADVANTECH SHEATHING 5/8" x 11 7/8"		06 16 64.A4	1
7'-5 1/2"	23.25.30.11.14.11	HUBER ADVANTECH SHEATHING 5/8" x 11 7/8"		06 16 64.A4	1
1'-9 7/8"	23.25.30.11.14.11	NORDIC NI-40x-11 7/8"-WALL STUD ROOF MODULE		06 17 00.C12	4

STRUCTURAL COLUMN SCHEDULE

Length	OmniClass Number	Type	Description	Keynote	Count
2'-9 7/8"	23.25.30.11.14.11	NORDIC NI-40x-11 7/8"-WALL STUD ROOF MODULE		06 17 00.C12	1
3'-4 3/8"	23.25.30.11.14.11	NORDIC NI-40x-11 7/8"-WALL STUD ROOF MODULE		06 17 00.C12	1
3'-9 7/8"	23.25.30.11.14.11	NORDIC NI-40x-11 7/8"-WALL STUD ROOF MODULE		06 17 00.C12	2
4'-9 7/8"	23.25.30.11.14.11	NORDIC NI-40x-11 7/8"-WALL STUD ROOF MODULE		06 17 00.C12	2
5'-4 3/8"	23.25.30.11.14.11	NORDIC NI-40x-11 7/8"-WALL STUD ROOF MODULE		06 17 00.C12	1
5'-9 7/8"	23.25.30.11.14.11	NORDIC NI-40x-11 7/8"-WALL STUD ROOF MODULE		06 17 00.C12	2
6'-9 7/8"	23.25.30.11.14.11	NORDIC NI-40x-11 7/8"-WALL STUD ROOF MODULE		06 17 00.C12	1
6'-10 3/8"	23.25.30.11.14.11	NORDIC NI-40x-11 7/8"-WALL STUD ROOF MODULE		06 17 00.C12	1
7'-3 7/8"	23.25.30.11.14.11	NORDIC NI-40x-11 7/8"-WALL STUD ROOF MODULE		06 17 00.C12	3
8'-9 7/8"	23.25.30.11.14.11	NORDIC NI-40x-11 7/8"-WALL STUD ROOF MODULE		06 17 00.C12	1
2'-9 7/8"	23.25.30.11.14.11	NORDIC NI-80-11 7/8"-WALL STUD ROOF MODULE 2		06 17 00.C13	1
3'-9 7/8"	23.25.30.11.14.11	NORDIC NI-80-11 7/8"-WALL STUD ROOF MODULE 2		06 17 00.C13	1
5'-9 7/8"	23.25.30.11.14.11	NORDIC NI-80-11 7/8"-WALL STUD ROOF MODULE 2		06 17 00.C13	1
7'-3 7/8"	23.25.30.11.14.11	NORDIC NI-80-11 7/8"-WALL STUD ROOF MODULE 2		06 17 00.C13	2
8'-4 3/8"	23.25.30.11.14.11	NORDIC NI-80-11 7/8"-WALL STUD ROOF MODULE 2		06 17 00.C13	1
7'-2 5/8"	23.25.30.11.14.11	NRDIC EnviroLAM Column 1 3/4" x 9 1/2"		06 18 16.A1	12
7'-2 5/8"	23.25.30.11.14.11	Web_stiffener		06 10 53.A1	10
7'-2 5/8"	23.25.30.11.14.11	Web_stiffener 2		06 10 53.A1	2

STRUCTURAL COLUMN SCHEDULE

Length	OmniClass Number	Type	Description	Keynote	Count

GENERAL SHEET NOTES

REFERENCE KEYNOTES

SHEET KEYNOTES

TEAM NAME: TEAM MASSACHUSETTS
ADDRESS: MASSART 621 HUNTINGTON AVE. BOSTON MA 02115
CONTACT: SPENCER CULHANE 602.677.6388 SPENCER.CULHANE@4DHOME.US WWW.4DHOME.US

CONSULTANTS

EPOCH HOMES

PASSIVE HOUSE INSTITUTE US

SLADEN FEINSTEIN INTEGRATED LIGHTING

LEMESSURIER CONSULTANTS, STRUCTURAL ENGINEERS

CLIENT

U.S. DEPARTMENT OF ENERGY

SOLAR DECATHLON 2011

WWW.SOLARDECATHLON.GOV

MARK	DATE	DESCRIPTION

LOT NUMBER: NA

DRAWN BY: AUTHOR

CHECKED BY: LC

COPYRIGHT: NONE: PROJECT IS PUBLIC DOMAIN

SHEET TITLE

COLUMNN AND BEAM SCHEDULES

S-602

8/12/2011 9:06:51 PM

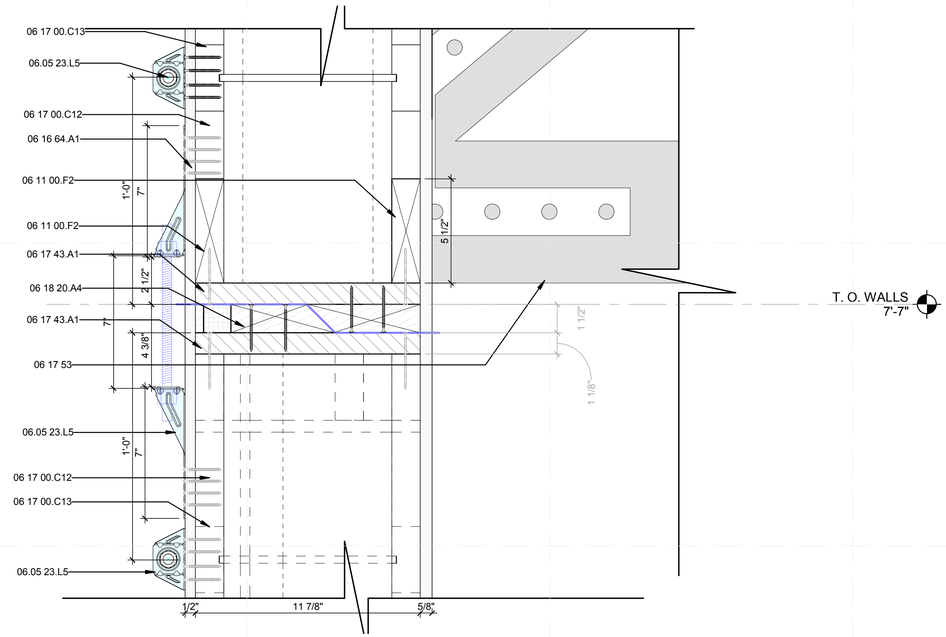

C1 TYP. ROOF MODULE CONNECTION T.O. WALL
3" = 1'-0"

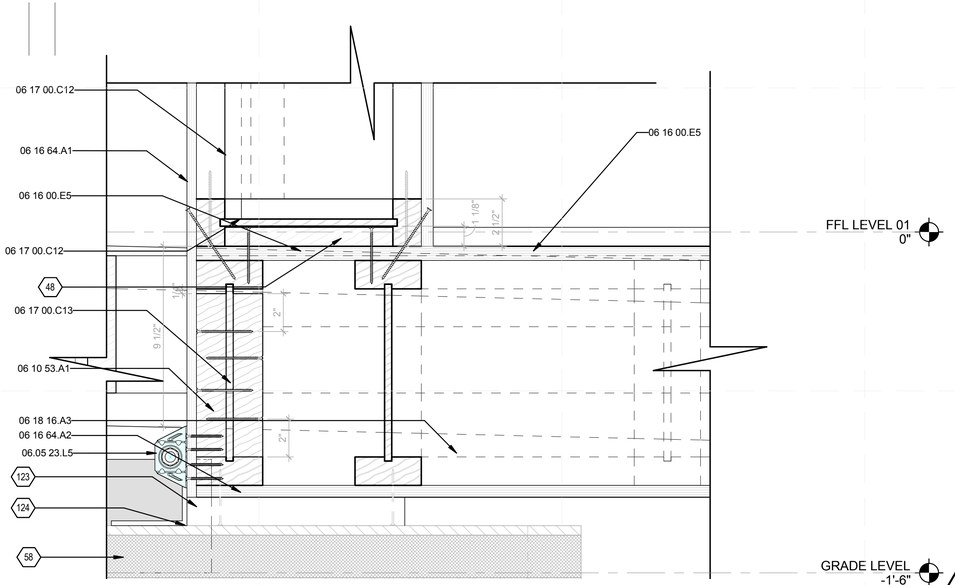

A1 TYP. FLOOR TO WALL AT GABLE ENDS DETAIL
3" = 1'-0"

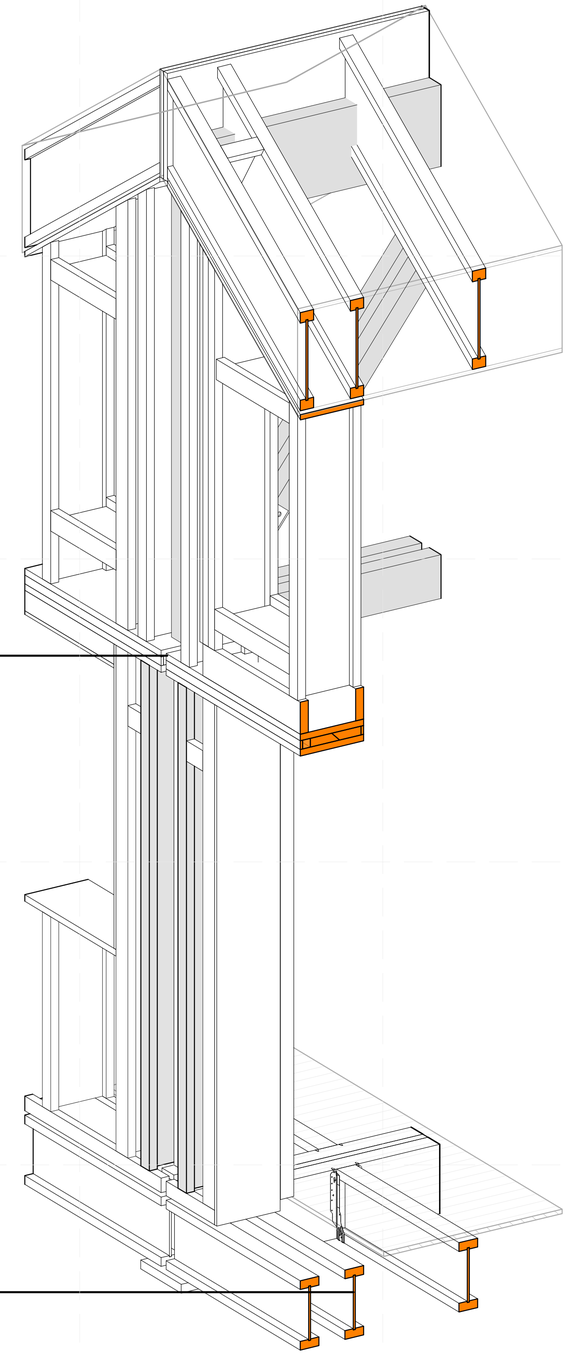

A4 TRUSS CONNECTION ISOMETRIC
NOT TO SCALE

GENERAL SHEET NOTES

REFERENCE KEYNOTES

06 10 53.A1	WEB STIFFENER
06 11 00.F2	2X6 FRAMING
06 16 00.E5	3/4" ADVANTECH T&G DECKING
06 16 64.A1	1/2" HUBERT ZIP SHEATHING
06 16 64.A2	1/2" ADVANTECH SHEATHING
06 17 00.C12	2 1/2" X 11 7/8" NORDIC I JOIST
06 17 00.C13	3 1/2" X 11 7/8" NORDIC I JOIST
06 17 43.A1	1 1/8" X 11 7/8" ADVANTECH RIM BOARD
06 17 53	SHOP-FABRICATED WOOD TRUSSES
06 18 16.A3	3 1/2" X 11 7/8" NORDIC LAM BEAM
06 18 20.A4	2x6 NORDIC ENVIRO LAM
06.05 23.L5	SIMPSON DTT2Z

SHEET KEYNOTES

48	SOLE PLATE
58	28"X28"X2" FOAMGLASS INSULATION FOR VIRTICAL ADJUSTMENT, CUT AS REQUIRED, UP TO 18" VIRTICAL CHANGE PERMITTED
123	11 1/2 X 12" PT WOOD BASE FASTENED TO UNDERSIDE OF FLOOR DECK
124	STEEL PLATE FASTENED TO PERIMETER OF FLOOR DECK'S WITH STEEL ANGLE

TEAM NAME: TEAM MASSACHUSETTS
ADDRESS: MASSART 621 HUNTINGTON AVE. BOSTON MA 02115
CONTACT: SPENCER CULHANE 602.677.6388 SPENCER.CULHANE@4DHOME.US WWW.4DHOME.US

CONSULTANTS

EPOCH HOMES

PASSIVE HOUSE INSTITUTE US

SLADEN FEINSTEIN INTEGRATED LIGHTING

LEMESSURIER CONSULTANTS, STRUCTURAL ENGINEERS

CLIENT

U.S. DEPARTMENT OF ENERGY

SOLAR DECATHLON 2011

WWW.SOLARDECATHLON.GOV

MARK	DATE	DESCRIPTION

LOT NUMBER:	NA
DRAWN BY:	SC_FL
CHECKED BY:	LC
COPYRIGHT:	NONE: PROJECT IS PUBLIC DOMAIN

SHEET TITLE

TYPICAL DETAILS

S-701

8/12/2011 9:06:58 PM

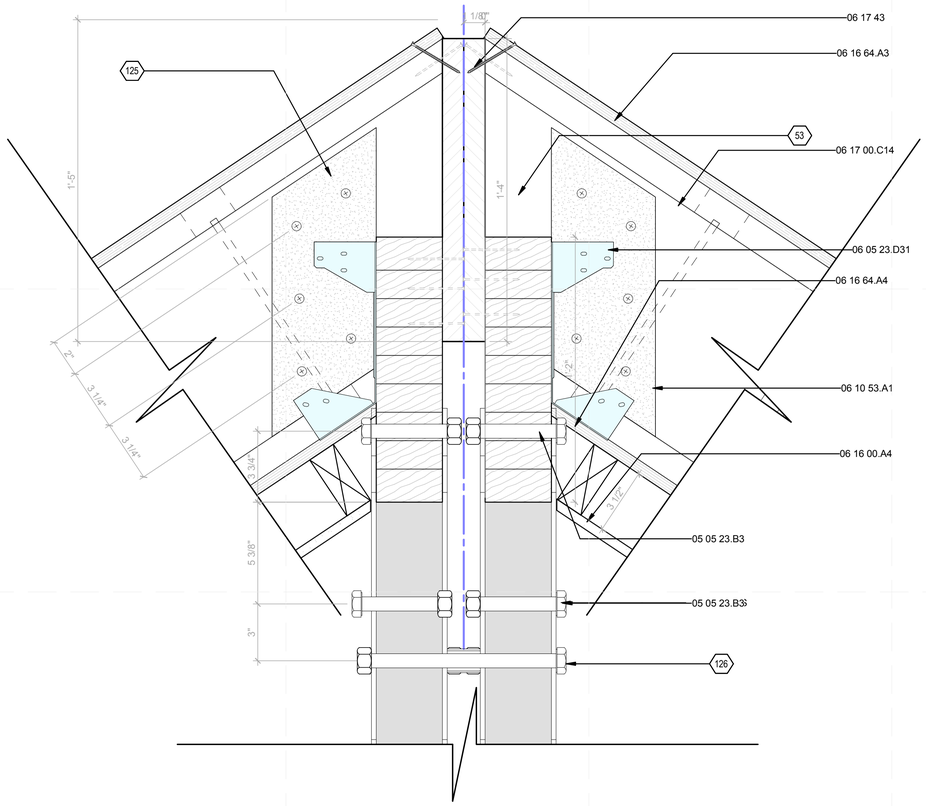

C1 TYPICAL RIDGE DETAIL
3" = 1'-0"

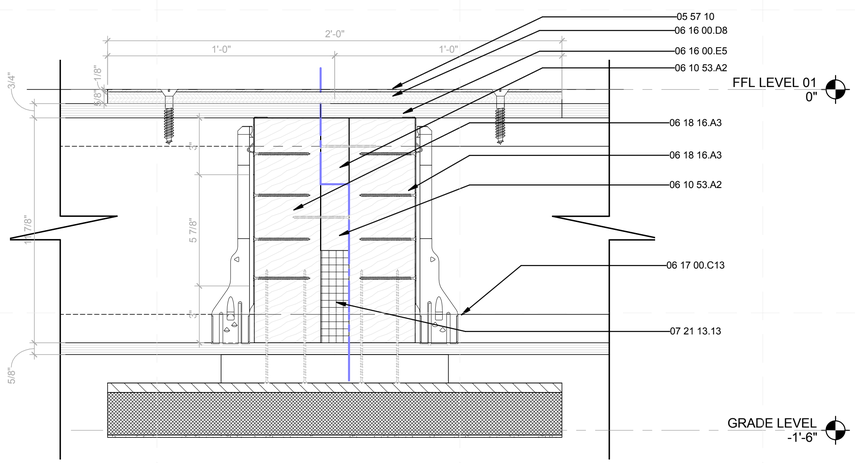

A1 TYPICAL MODULE FLOOR CONNECTION
3" = 1'-0"

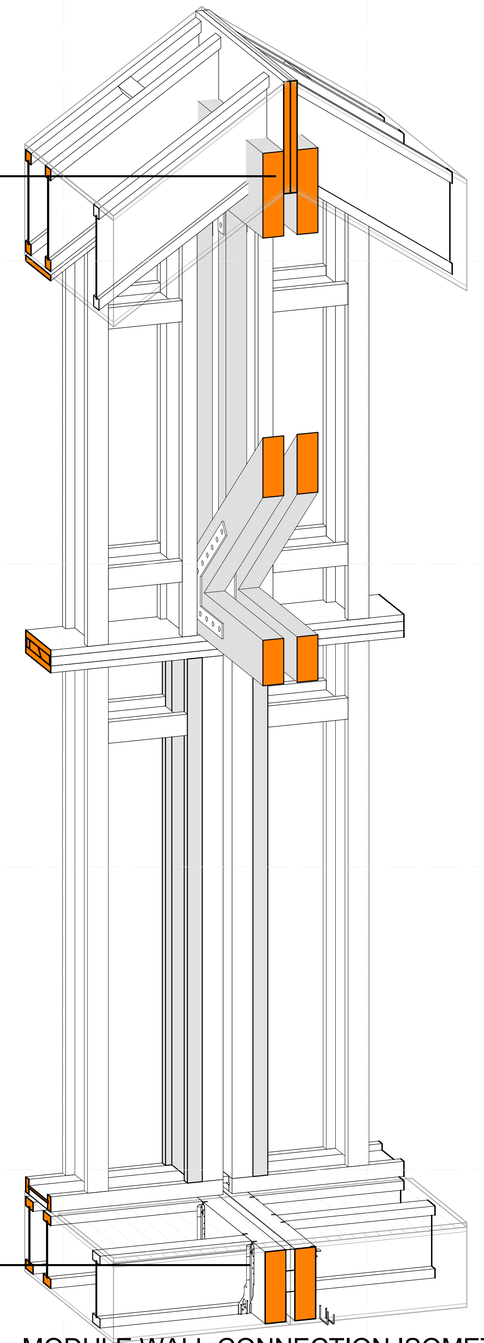

A4 MODULE WALL CONNECTION ISOMETRIC
NOT TO SCALE

GENERAL SHEET NOTES

REFERENCE KEYNOTES

05 05 23.B3	3/4" A325 BOLT
05 57 10	1/8" ALUMINUM SHEET METAL
06 05 23.D30	SIMPSON IUS JOIST HANGER
06 05 23.D31	SIMPSON LSSUH310 HANGER
06 10 53.A1	WEB STIFFENER
06 10 53.A2	2X4 KEYWAY
06 16 00.A4	5/8" GYPSUM SHEATHING
06 16 00.D8	5/8" PLYWOOD
06 16 00.E5	3/4" ADVANTECH T&G DECKING
06 16 64.A3	5/8" HUBERT ZIP SHEATHING
06 16 64.A4	5/8" ADVANTECH SHEATHING
06 17 00.C13	3 1/2" X 11 7/8" NORDIC I JOIST
06 17 00.C14	2 1/2" X 14" NORDIC I JOIST
06 17 43	RIM BOARDS
06 18 16.A3	3 1/2" X 11 7/8" NORDIC LAM BEAM
07 21 13.13	FOAM BOARD INSULATION

SHEET KEYNOTES

53	CAVITY FOR THERMAL BREAK AND INSULATION
125	2X6 BEVELED CUT BEARING STIFFENER REQUIRED EACH SIDE
126	FIELD CONNECTION 3/8" BOLTS

TEAM NAME: TEAM MASSACHUSETTS
ADDRESS: MASSART 621 HUNTINGTON AVE. BOSTON MA 02115
CONTACT: SPENCER CULHANE 602.677.6388 SPENCER.CULHANE@4DHOME.US WWW.4DHOME.US

CONSULTANTS

EPOCH HOMES

PASSIVE HOUSE INSTITUTE US

SLADEN FEINSTEIN INTEGRATED LIGHTING

LEMESSURIER CONSULTANTS, STRUCTURAL ENGINEERS

CLIENT

U.S. DEPARTMENT OF ENERGY

SOLAR DECATHLON 2011

WWW.SOLARDECATHLON.GOV

MARK	DATE	DESCRIPTION

LOT NUMBER:	NA
DRAWN BY:	SC_FL
CHECKED BY:	LC
COPYRIGHT:	NONE: PROJECT IS PUBLIC DOMAIN

SHEET TITLE

TYPICAL FRAMING DETAILS

S-702

8/12/2011 9:07:15 PM

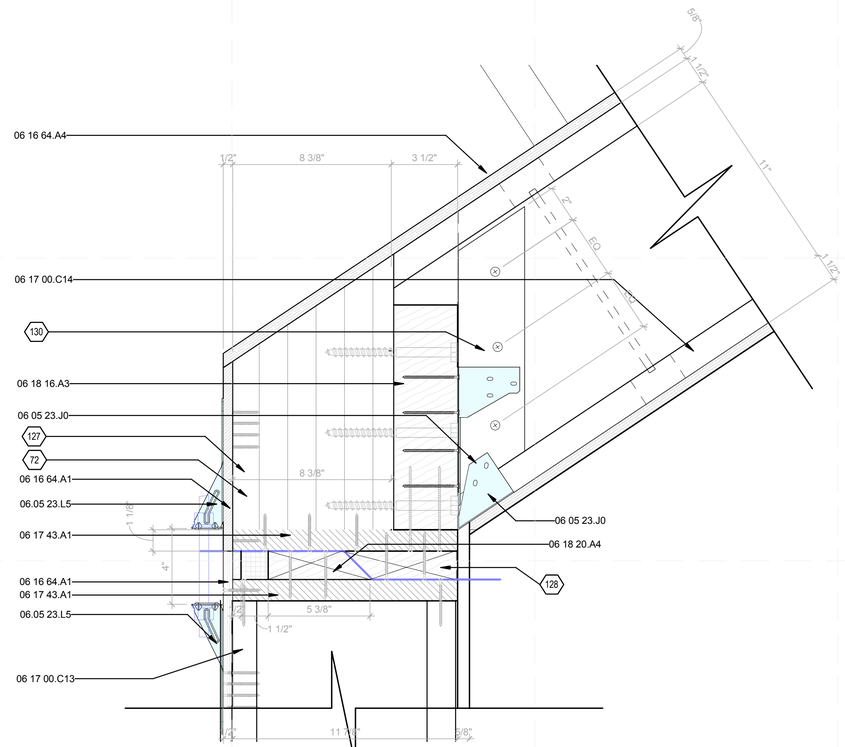

C1 TYPICAL HEADER CONNECTION DETAIL
3" = 1'-0"

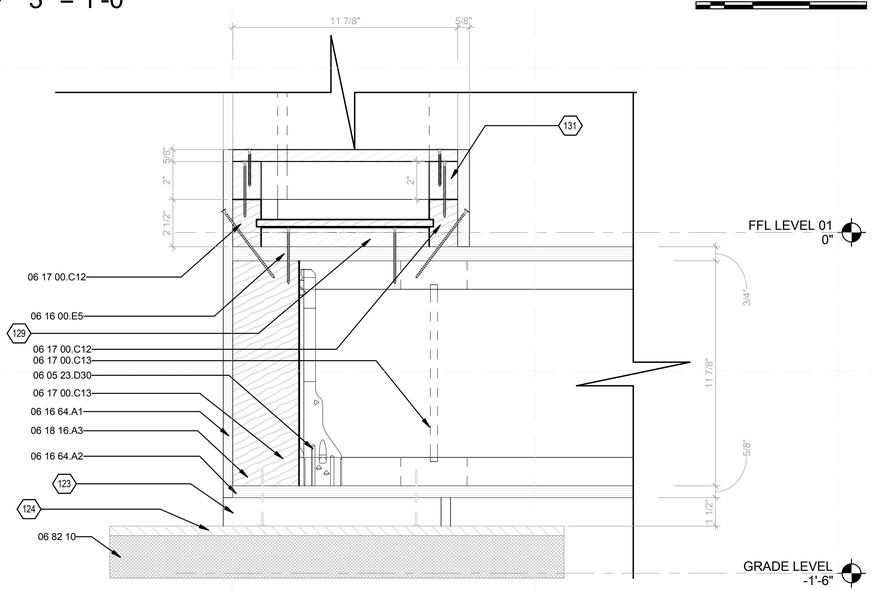

A1 TYP. ROUGH WINDOW SILL AT FLOOR PLATE
3" = 1'-0"

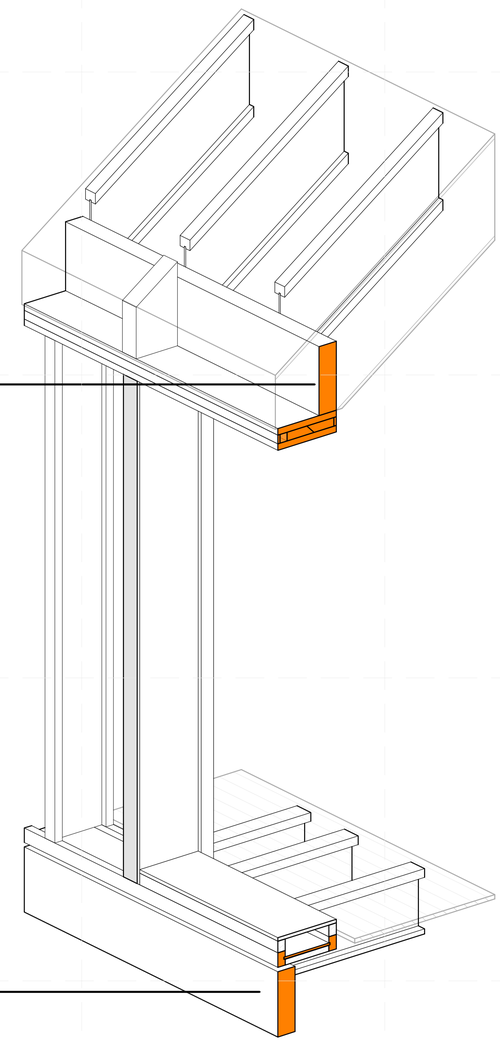

A4 HEADER AND SILL ISOMETRIC
NOT TO SCALE

GENERAL SHEET NOTES

REFERENCE KEYNOTES

06 05 23.D30	SIMPSON IUS JOIST HANGER
06 05 23.J0	HANGERS
06 16 00.E5	3/4" ADVANTECH T&G DECKING
06 16 64.A1	1/2" HUBERT ZIP SHEATHING
06 16 64.A2	1/2" ADVANTECH SHEATHING
06 16 64.A4	5/8" ADVANTECH SHEATHING
06 17 00.C12	2 1/2" X 11 7/8" NORDIC I JOIST
06 17 00.C13	3 1/2" X 11 7/8" NORDIC I JOIST
06 17 00.C14	2 1/2" X 14" NORDIC I JOIST
06 17 43.A1	1 1/8" X 11 7/8" ADVANTECH RIM BOARD
06 18 16.A3	3 1/2" X 11 7/8" NORDIC LAM BEAM
06 18 20.A4	2x6 NORDIC ENVIRO LAM
06 82 10	FOAM GLASS
06.05 23.L5	SIMPSON DTT2Z

SHEET KEYNOTES

72	NORDIC LAM BLOCKING
123	11 1/2 X 12" PT WOOD BASE FASTENED TO UNDERSIDE OF FLOOR DECK
124	STEEL PLATE FASTENED TO PERIMETER OF FLOOR DECK'S WITH STEEL ANGLE
127	3 1/2" X 9 1/2" NORDIC LAM BLOCKING TRIMMED TO 8 3/8"
128	KEYWAY BLOCKING
129	SOLE PLATE WEB FILLER
130	2X4 BEVELED BEARING STIFFENER REQUIRED EACH SIDE
131	2X3 TRIMMED DOWN TO 2"

TEAM NAME: TEAM MASSACHUSETTS
ADDRESS: MASSART 621 HUNTINGTON AVE. BOSTON MA 02115
CONTACT: SPENCER CULHANE 602.677.6388 SPENCER.CULHANE@4DHOME.US WWW.4DHOME.US

CONSULTANTS

EPOCH HOMES

PASSIVE HOUSE INSTITUTE US

SLADEN FEINSTEIN INTEGRATED LIGHTING

LEMESSURIER CONSULTANTS, STRUCTURAL ENGINEERS

CLIENT

U.S. DEPARTMENT OF ENERGY

SOLAR DECATHLON 2011

WWW.SOLARDECATHLON.GOV

MARK	DATE	DESCRIPTION

LOT NUMBER:	NA
DRAWN BY:	SC_FL
CHECKED BY:	LC
COPYRIGHT:	NONE: PROJECT IS PUBLIC DOMAIN

SHEET TITLE

TYPICAL DETAILS

S-703

8/12/2011 9:07:25 PM

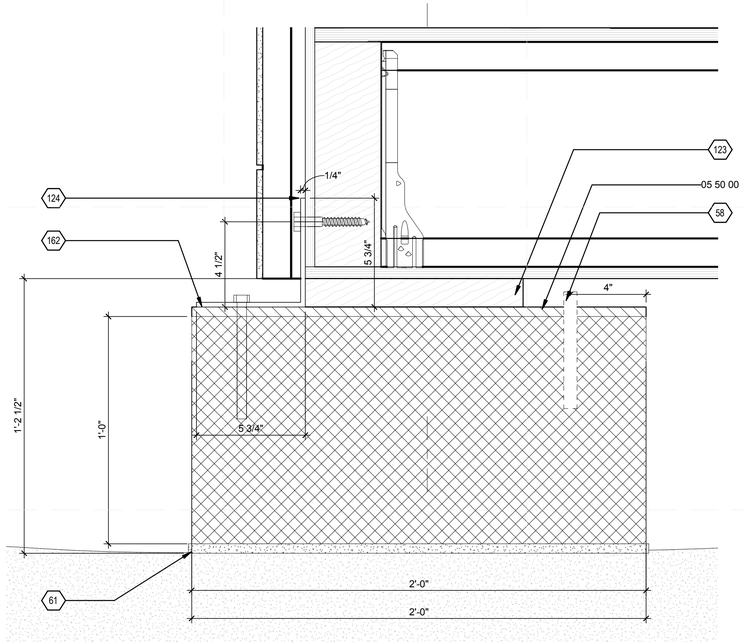

C1 FOUNDATION FOOTING SEACTION
3" = 1'-0"

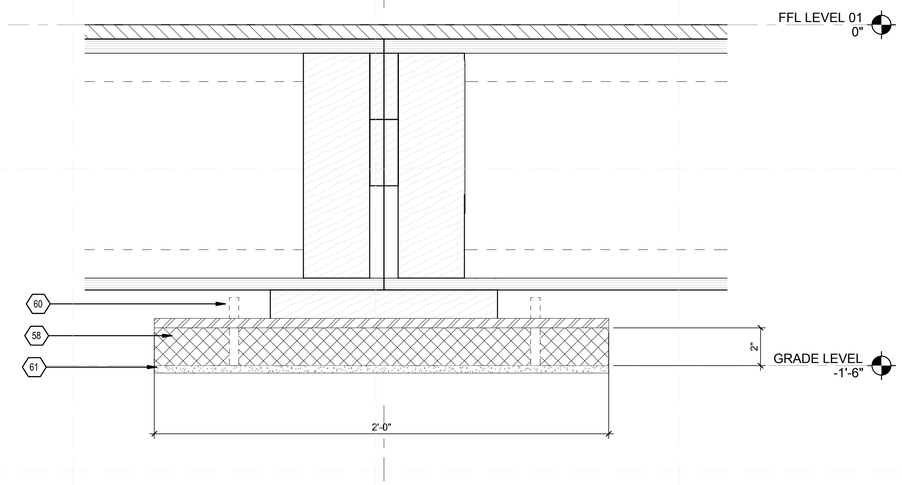

C4 FOUNDATION FOOTING STEEL SHIMS
3" = 1'-0"

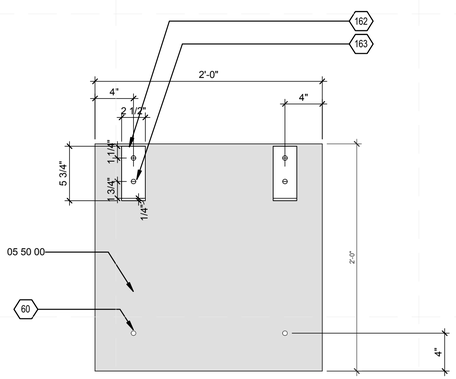

A2 FOUNDATION FOOTING
1 1/2" = 1'-0"

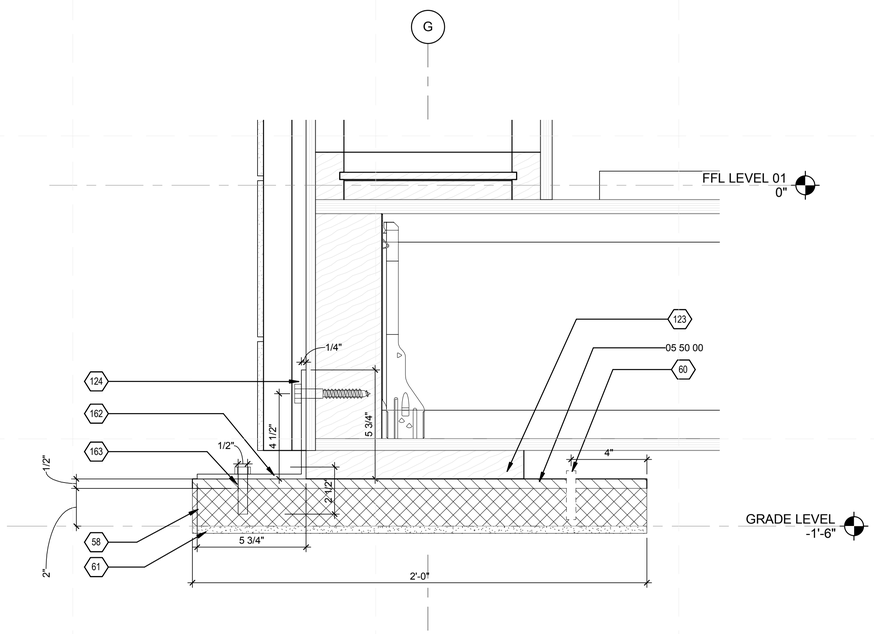

A4 FOUNDATION FOOTING STEEL PLATE
3" = 1'-0"

GENERAL SHEET NOTES

1. FOAMGLAS INSULATION, STRENGTH IN C, F'=90PSI BENDING STRENGTH, S=70PSI
3. THE METAL FABRICATION, ASTM514 STEEL F'=20,000PSF YEILD STRESS=42KSI

REFERENCE KEYNOTES

05 50 00	METAL FABRICATIONS

SHEET KEYNOTES

58	28"X28"X2" FOAMGLASS INSULATION FOR VIRTICAL ADJUSTMENT, CUT AS REQUIRED, UP TO 18" VIRTICAL CHANGE PERMITTED
60	FOOTING PIN
61	LEVELING SAND. ALL MATERIAL SHALL BE RESTRAINED AT ALL TIME BY LANDSCAPE FABRIC, WHOSE EDGES SHALL BE FOLDED OVER THE FILL AND REMAIN BENEATH THE FOOTING.
123	11 1/2 X 12" PT WOOD BASE FASTENED TO UNDERSIDE OF FLOOR DECK
124	STEEL PLATE FASTENED TO PERIMETER OF FLOOR DECK'S WITH STEEL ANGLE
162	HL53PC W 5 3/4"X5 3/4" L 2 1/2" ANGLE FASTENED TO STEEL PLATE WITH 1/2" BOLTS
163	PLATE HOLES DRILLED AND TAPPED FOR 1/2" BOLTS

4D HOME

TEAM NAME: TEAM MASSACHUSETTS
ADDRESS: MASSART 621 HUNTINGTON AVE. BOSTON MA 02115
CONTACT: SPENCER CULHANE 602.677.6388 SPENCER.CULHANE@4DHOME.US WWW.4DHOME.US

CONSULTANTS

EPOCH HOMES
PASSIVE HOUSE INSTITUTE US
SLADEN FEINSTEIN INTEGRATED LIGHTING
LEMESSURIER CONSULTANTS, STRUCTURAL ENGINEERS

CLIENT

U.S. DEPARTMENT OF ENERGY
SOLAR DECATHLON 2011
WWW.SOLARDECATHLON.GOV

U.S. DEPARTMENT OF ENERGY SOLAR DECATHLON

MARK	DATE	DESCRIPTION

LOT NUMBER:	NA
DRAWN BY:	FL
CHECKED BY:	LC
COPYRIGHT:	NONE: PROJECT IS PUBLIC DOMAIN

SHEET TITLE

TYPICAL FOOTING DETAILS

S-704

8/12/2011 9:07:32 PM

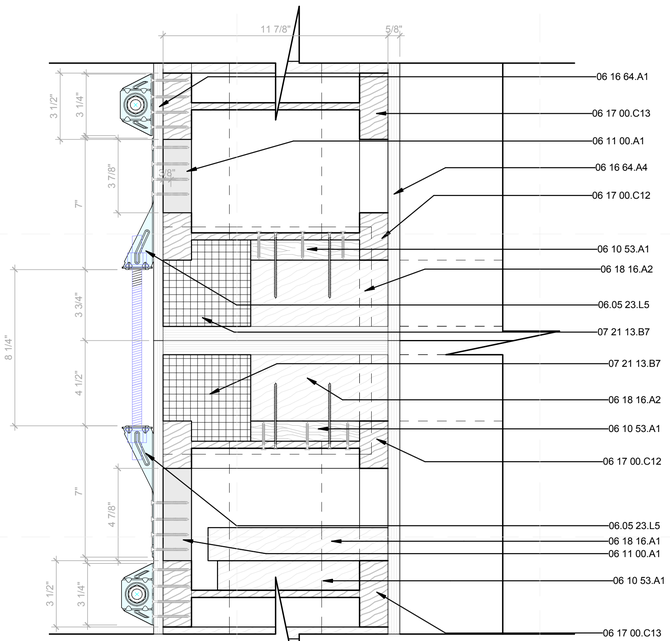

C1 PLAN DETAIL WEST GABLE MODULE CONNECTION
3" = 1'-0"

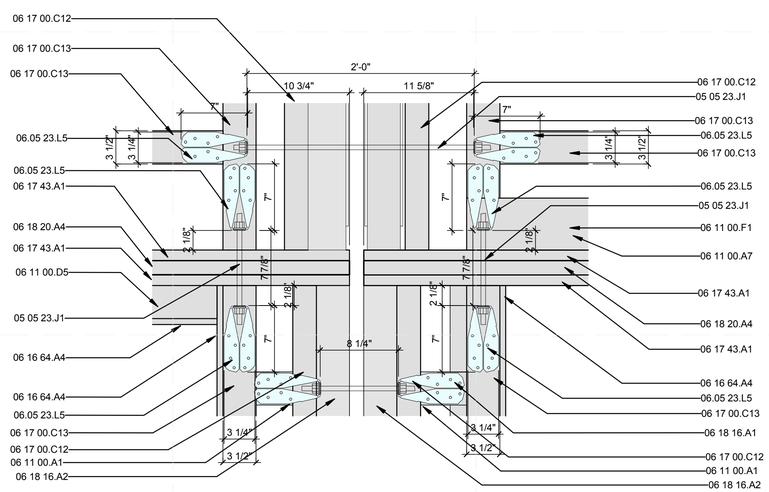

A1 CALLOUT OF FRAMING ELEVATION OF WEST WALL
1 1/2" = 1'-0"

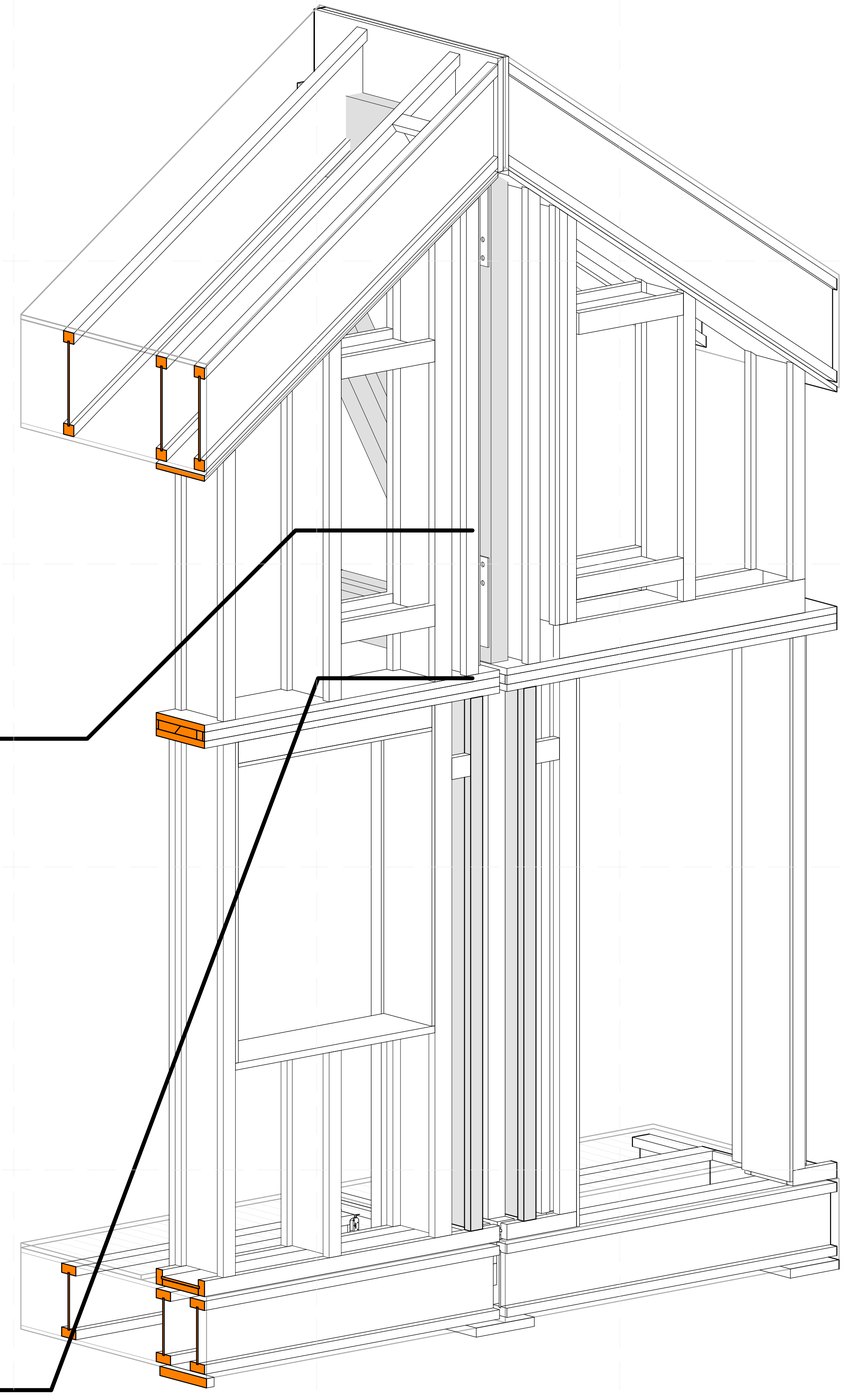

A4 WEST MODULE WALL CONNECTION ISOMETRIC
NOT TO SCALE

GENERAL SHEET NOTES

REFERENCE KEYNOTES

05 05 23.J1	1/2" THREADED ROD BOLT
06 10 53.A1	WEB STIFFENER
06 11 00.A1	BLOCKING
06 11 00.A7	HEADER
06 11 00.D5	2X4 FRAMING @ 16" O.C.
06 11 00.F1	2X6
06 16 64.A1	1/2" HUBERT ZIP SHEATHING
06 16 64.A4	5/8" ADVANTECH SHEATHING
06 17 00.C12	2 1/2" X 11 7/8" NORDIC I JOIST
06 17 00.C13	3 1/2" X 11 7/8" NORDIC I JOIST
06 17 43.A1	1 1/8" X 11 7/8" ADVANTECH RIM BOARD
06 18 16.A1	1 3/4" X 9 1/2" NORDIC LAM COLUMN
06 18 16.A2	3 1/2" X 7 1/4" NORDIC LAM COLUMN
06 18 20.A4	2x6 NORDIC ENVIRO LAM
06.05 23.L5	SIMPSON DTT2Z
07 21 13.B7	4" RIGID INSULATION

SHEET KEYNOTES

TEAM NAME: TEAM MASSACHUSETTS
ADDRESS: MASSART 621 HUNTINGTON AVE. BOSTON MA 02115
CONTACT: SPENCER CULHANE 602.677.6388 SPENCER.CULHANE@4DHOME.US WWW.4DHOME.US

CONSULTANTS

EPOCH HOMES

PASSIVE HOUSE INSTITUTE US

SLADEN FEINSTEIN INTEGRATED LIGHTING

LEMESSURIER CONSULTANTS, STRUCTURAL ENGINEERS

CLIENT

U.S. DEPARTMENT OF ENERGY

SOLAR DECATHLON 2011

WWW.SOLARDECATHLON.GOV

MARK	DATE	DESCRIPTION

LOT NUMBER:	NA
DRAWN BY:	FL
CHECKED BY:	LC
COPYRIGHT:	NONE: PROJECT IS PUBLIC DOMAIN

SHEET TITLE

WEST MODULE CONNECTION DETAILS

S-705

8/12/2011 9:07:39 PM

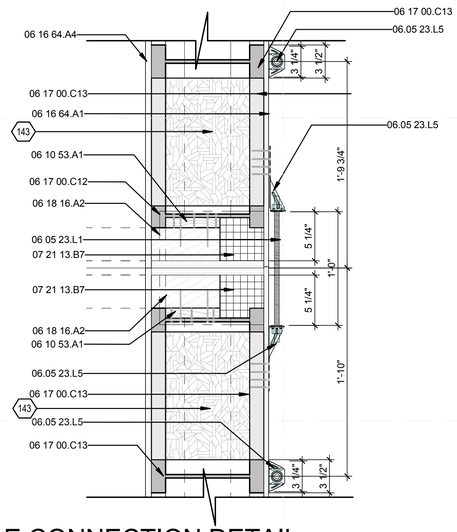

C1 EAST WALL MODULE CONNECTION DETAIL
1 1/2" = 1'-0"

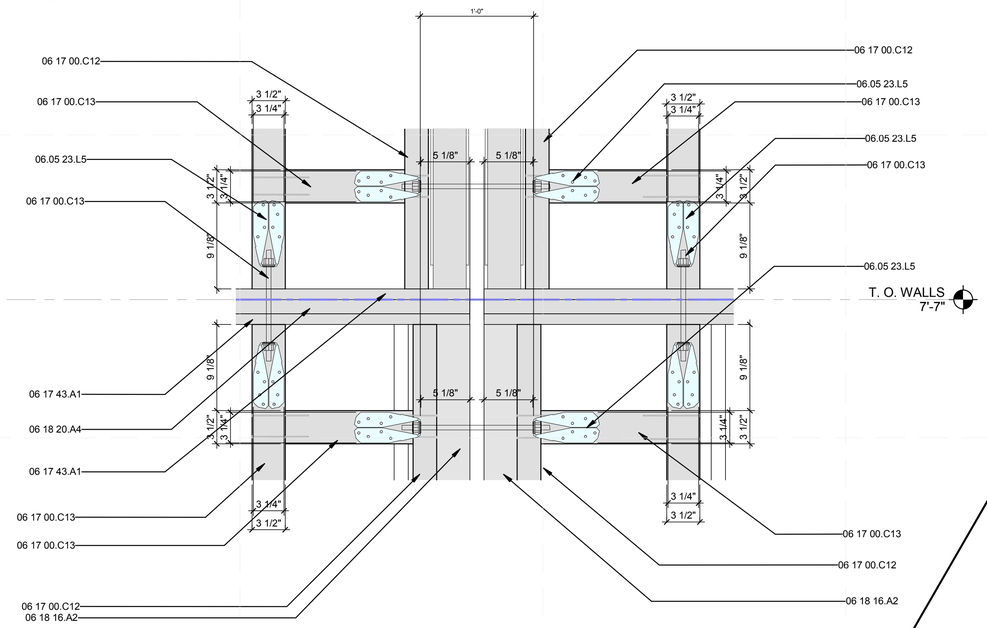

A1 Callout of FRAMING ELEVATION OF EAST WALL
1 1/2" = 1'-0"

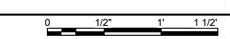

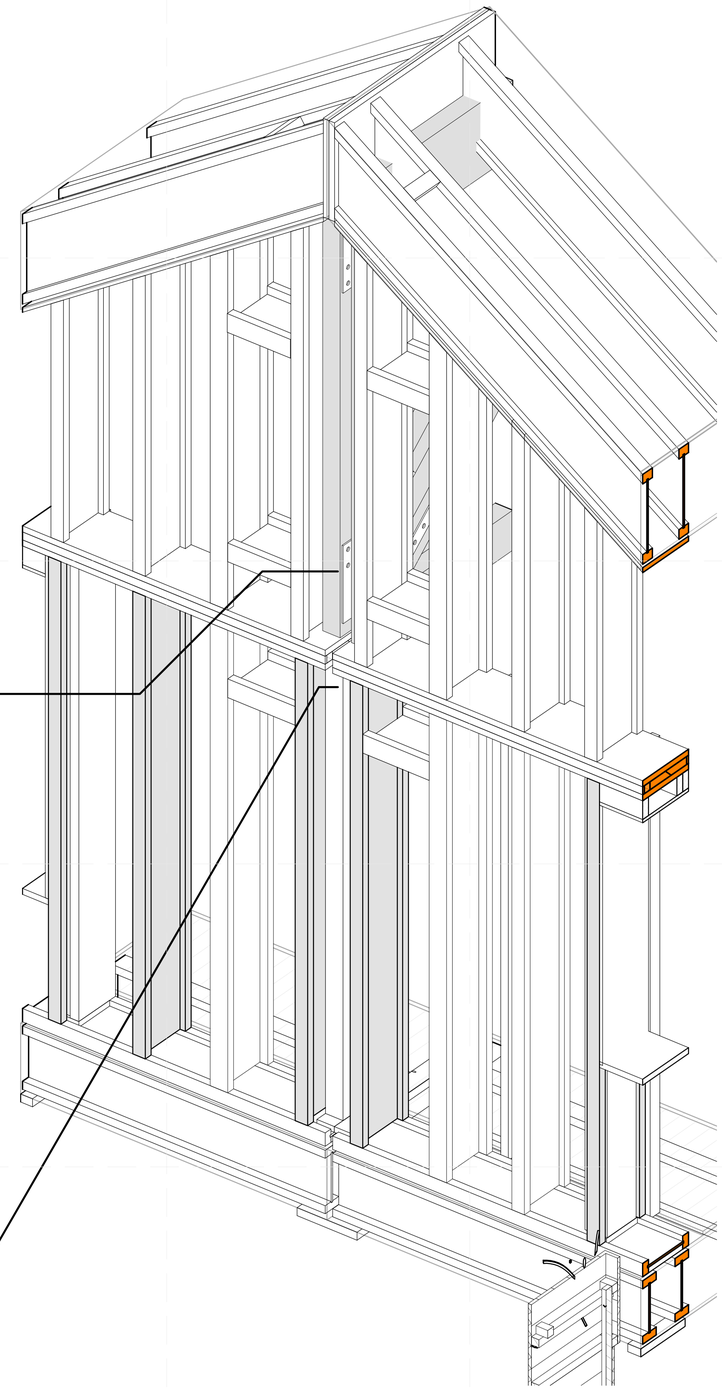

A4 EAST MODULE WALL CONNECTION ISOMETRIC

NOT TO SCALE

GENERAL SHEET NOTES

REFERENCE KEYNOTES

06 05 23.L1	HD2A
06 10 53.A1	WEB STIFFENER
06 16 64.A1	1/2" HUBERT ZIP SHEATHING
06 16 64.A4	5/8" ADVANTECH SHEATHING
06 17 00.C12	2 1/2" X 11 7/8" NORDIC I JOIST
06 17 00.C13	3 1/2" X 11 7/8" NORDIC I JOIST
06 17 43.A1	1 1/8" X 11 7/8" ADVANTECH RIM BOARD
06 18 16.A2	3 1/2" X 7 1/4" NORDIC LAM COLUMN
06 18 20.A4	2x6 NORDIC ENVIRO LAM
06.05 23.L5	SIMPSON DTT2Z
07 21 13.B7	4" RIGID INSULATION

SHEET KEYNOTES

143	NORDIC I JOIST NI-80 11 7/8" BLOCKING FOR FASTENING DTT2Z HOLD DOWNS

TEAM NAME: TEAM MASSACHUSETTS

ADDRESS: MASSART 621 HUNTINGTON AVE. BOSTON MA 02115

CONTACT: SPENCER CULHANE 602.677.6388 SPENCER.CULHANE@4DHOME.US WWW.4DHOME.US

CONSULTANTS

EPOCH HOMES

PASSIVE HOUSE INSTITUTE US

SLADEN FEINSTEIN INTEGRATED LIGHTING

LEMESSURIER CONSULTANTS, STRUCTURAL ENGINEERS

CLIENT

U.S. DEPARTMENT OF ENERGY

SOLAR DECATHLON 2011

WWW.SOLARDECATHLON.GOV

MARK	DATE	DESCRIPTION

LOT NUMBER:	NA
DRAWN BY:	FL
CHECKED BY:	LC
COPYRIGHT:	NONE: PROJECT IS PUBLIC DOMAIN

SHEET TITLE

EAST MODULE CONNECTION DEATILS

S-706

8/12/2011 9:07:47 PM

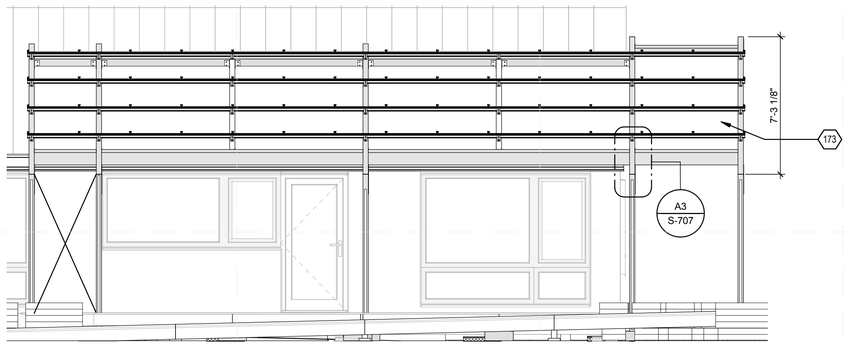

D1 SOUTH TRELLIS SOUTH ELEVATION
1/4" = 1'-0"

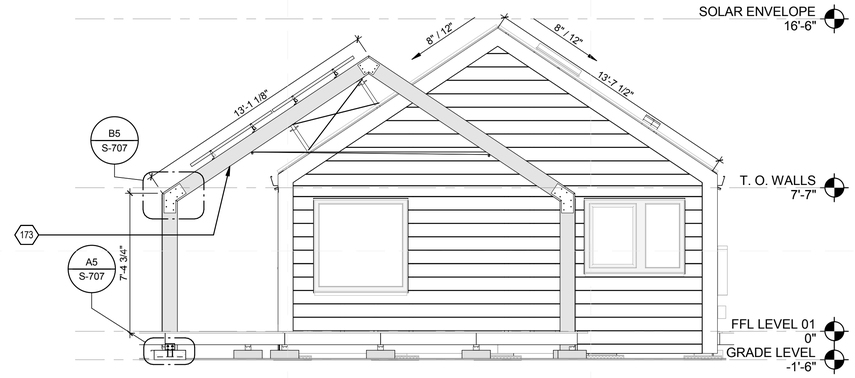

D4 SOUTH TRELLIS EAST ELEVATION
1/4" = 1'-0"

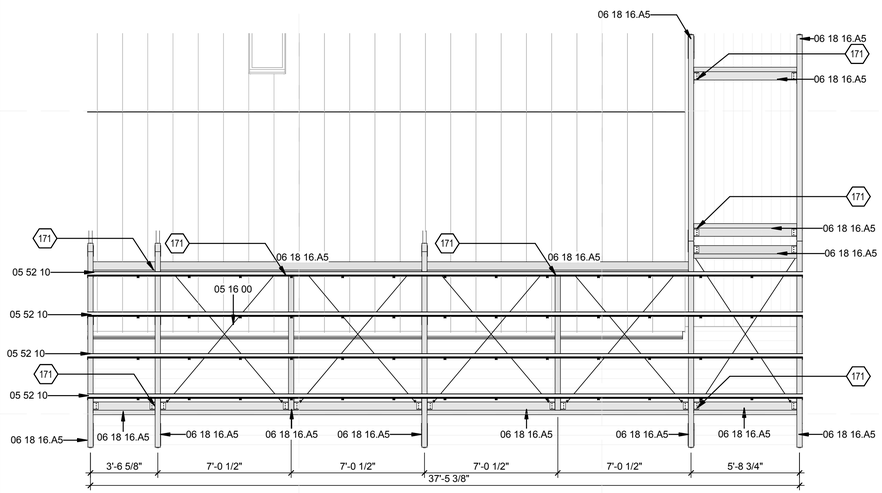

B1 SOUTH TRELLIS ROOF PLAN
1/4" = 1'-0"

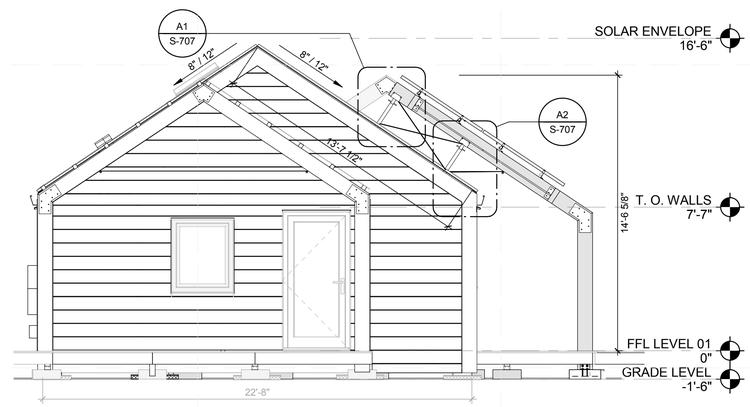

C4 SOUTH TRELLIES WEST ELEVATION
1/4" = 1'-0"

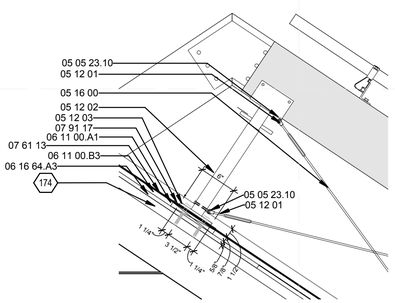

A1 TRELLIS CONNECTION DETAIL
1" = 1'-0"

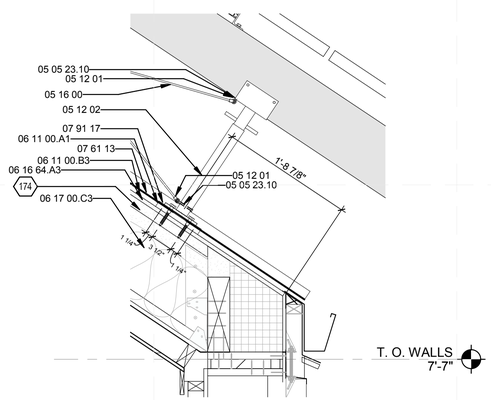

A2 TRELLIS CONNECTION DETAIL 2
1" = 1'-0"

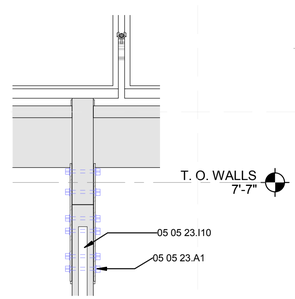

A3 COLUMN CONNECTION
1" = 1'-0"

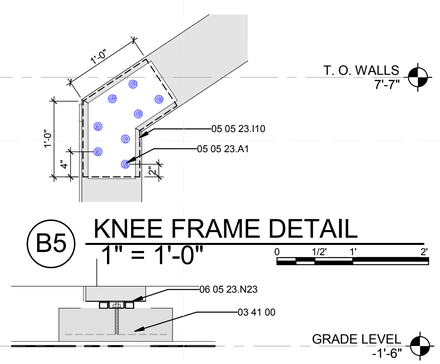

B5 KNEE FRAME DETAIL
1" = 1'-0"

A5 FOUNDATION DETAIL
1" = 1'-0"

GENERAL SHEET NOTES

REFERENCE KEYNOTES

03 41 00	PRECAST STRUCTURAL CONCRETE
05 05 23.10	EYE BOLT
05 05 23.A1	1/2" A307 BOLT
05 05 23.I10	1/4" STEEL PLATE
05 12 01	TOGGLE FORK TURNBUCKLE
05 12 02	19"-12" ELLIS STEEL SHORE
05 12 03	6"X6" ELLIS STEEL SHORE PLATE
05 16 00	STRUCTURAL CABLING
05 52 10	XRS RAIL
06 05 23.N23	SIMPSON STRONG TIE ABA 46Z
06 11 00.A1	BLOCKING
06 11 00.B3	1X3
06 16 64.A3	5/8" HUBERT ZIP SHEATHING
06 17 00.C3	14" WOOD I JOIST
06 18 16.A5	4X10 NORDIC LAM BEAM
07 61 13	STANDING SEAM SHEET METAL ROOFING
07 91 17	EPDM RUBBER GASKET

SHEET KEYNOTES

171	SIMPSON HL37 ANGLE REQUIRED EACH SIDE
173	PVC COVER UNDERNEATH
174	1 1/2" X 2 1/2" JOIST TOP CORD

TEAM NAME: TEAM MASSACHUSETTS
ADDRESS: MASSART 621 HUNTINGTON AVE. BOSTON MA 02115
CONTACT: SPENCER CULHANE 602.677.6388 SPENCER.CULHANE@4DHOME.US WWW.4DHOME.US

CONSULTANTS

EPOCH HOMES

PASSIVE HOUSE INSTITUTE US

SLADEN FEINSTEIN INTEGRATED LIGHTING

LEMESSURIER CONSULTANTS, STRUCTURAL ENGINEERS

CLIENT

U.S. DEPARTMENT OF ENERGY

SOLAR DECATHLON 2011

WWW.SOLARDECATHLON.GOV

MARK	DATE	DESCRIPTION

LOT NUMBER:	NA
DRAWN BY:	SC-FL
CHECKED BY:	LC
COPYRIGHT:	NONE: PROJECT IS PUBLIC DOMAIN

SHEET TITLE

SOUTH TRELLIS

S-707

8/12/2011 9:08:02 PM

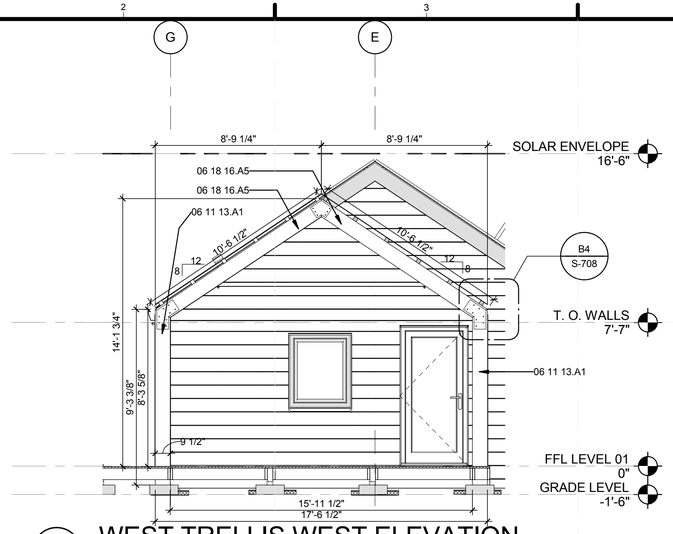

D1 WEST TRELLIS WEST ELEVATION
1/4" = 1'-0"

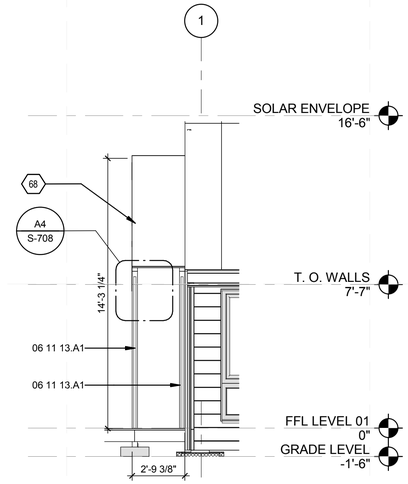

D3 WEST TRELLIS SOUTH ELEVATION
1/4" = 1'-0"

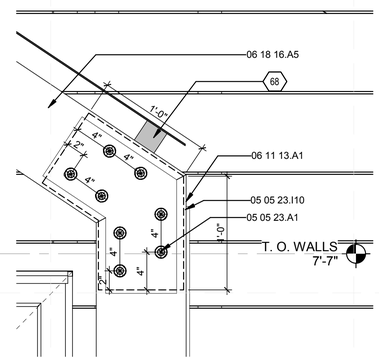

B4 WEST TRELLIS KNEE FRAME DETAIL
1 1/2" = 1'-0"

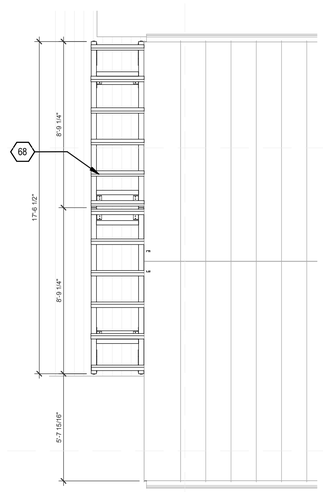

A2 WEST TRELLIS ROOF PLAN
1/4" = 1'-0"

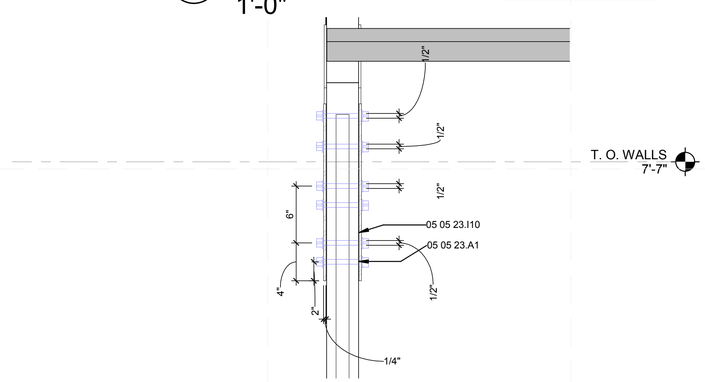

A4 WEST TRELLIS COLUMN CONNECTION
1 1/2" = 1'-0"

GENERAL SHEET NOTES

REFERENCE KEYNOTES

05 05 23.A1	1/2" A307 BOLT
05 05 23.I10	1/4" STEEL PLATE
06 11 13.A1	4X10 ENGINEERED WOOD
06 18 16.A5	4X10 NORDIC LAM BEAM

SHEET KEYNOTES

68	3X3

4D HOME

TEAM NAME:	TEAM MASSACHUSETTS
ADDRESS:	MASSART 621 HUNTINGTON AVE. BOSTON MA 02115
CONTACT:	SPENCER CULHANE 602.677.6388 SPENCER.CULHANE@4DHOME.US WWW.4DHOME.US

CONSULTANTS

EPOCH HOMES

PASSIVE HOUSE INSTITUTE US

SLADEN FEINSTEIN INTEGRATED LIGHTING

LEMESSURIER CONSULTANTS, STRUCTURAL ENGINEERS

CLIENT

U.S. DEPARTMENT OF ENERGY

SOLAR DECATHLON 2011

WWW.SOLARDECATHLON.GOV

U.S. DEPARTMENT OF ENERGY SOLAR DECATHLON

MARK	DATE	DESCRIPTION

LOT NUMBER:	NA
DRAWN BY:	FL
CHECKED BY:	LC
COPYRIGHT:	NONE: PROJECT IS PUBLIC DOMAIN

SHEET TITLE

WEST TRELLIS

S-708

8/12/2011 9:08:09 PM

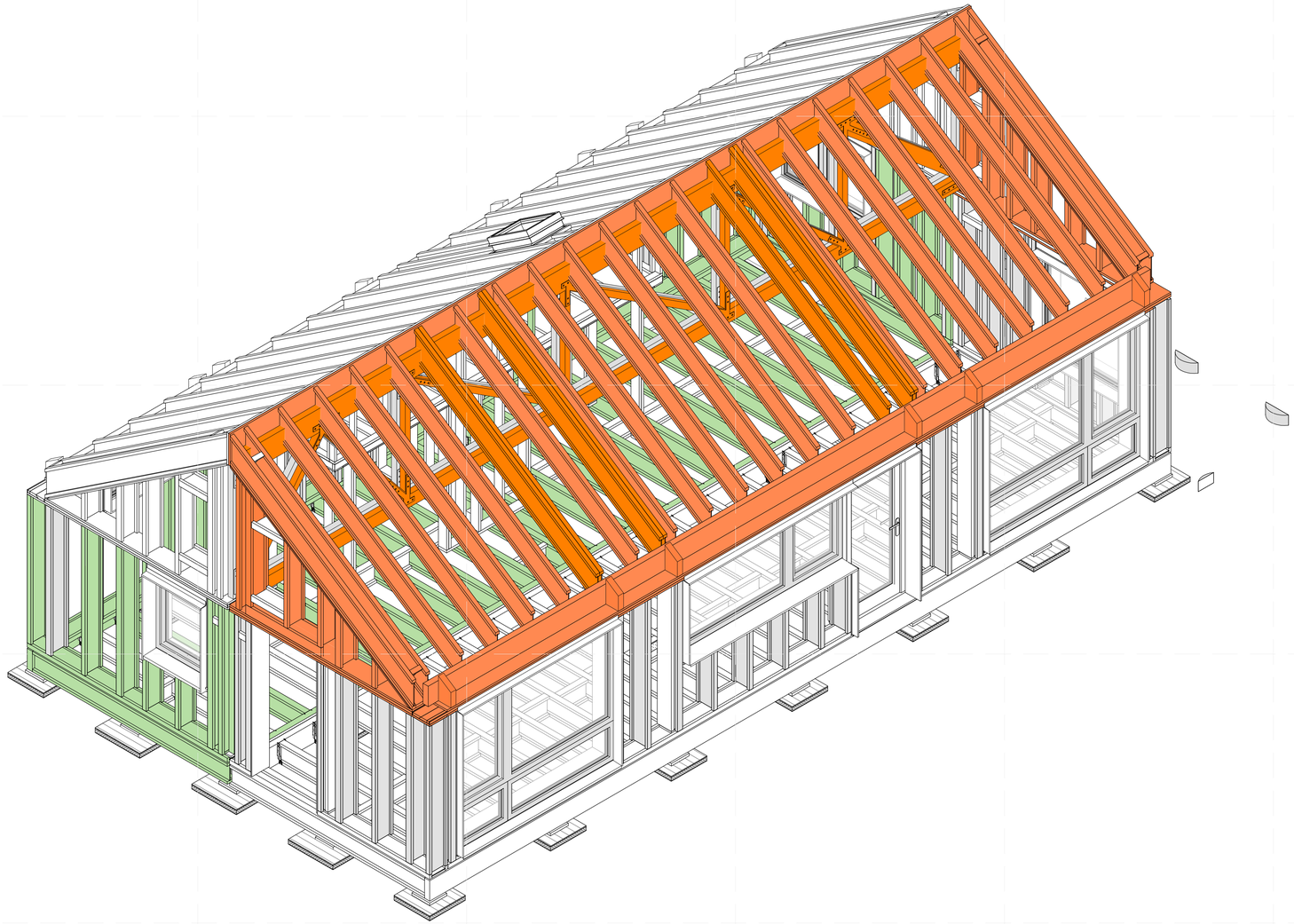

A1 FRAMING ISOMETRIC NTS

NOT TO SCALE

8/12/2011 9:08:30 PM

TEAM NAME:	TEAM MASSACHUSETTS
ADDRESS:	MASSART 621 HUNTINGTON AVE. BOSTON MA 02115
CONTACT:	SPENCER CULHANE 602.677.6388 SPENCER.CULHANE@4DHOME.US WWW.4DHOME.US

CONSULTANTS

EPOCH HOMES

PASSIVE HOUSE INSTITUTE US

SLADEN FEINSTEIN INTEGRATED LIGHTING

LEMESSURIER CONSULTANTS, STRUCTURAL ENGINEERS

CLIENT

U.S. DEPARTMENT OF ENERGY

SOLAR DECATHLON 2011

WWW.SOLARDECATHLON.GOV

MARK	DATE	DESCRIPTION

LOT NUMBER:	NA
DRAWN BY:	SC_FL
CHECKED BY:	LC
COPYRIGHT:	NONE: PROJECT IS PUBLIC DOMAIN

SHEET TITLE

FRAMING ISOMETRICS

S-901

THE 4-D HOME IS A HOME THAT LIVES IN TIME. IT IS DESIGNED TO ACCOMMODATE THE EVER CHANGING NEEDS OF A NEW ENGLAND FAMILY OF THREE THROUGHOUT THEIR LIVES: LONG TERM EVOLVING USERS AND CLIMATE (ADAPTABILITY) AND DAILY WEATHER AND USER NEEDS (FLEXIBILITY).

THE DESIGN IS BASED ON THE NEW ENGLAND VERNACULAR, FUSED WITH THE MODERN AGE. ADAPTABILITY IN NEW ENGLAND IS KEY. THE HOUSE EMPLOYS *PASSIVE HOUSE* BUILDING METHODS ENABLING IT TO ADAPT TO THE VARYING NEW ENGLAND CLIMATE, WITHOUT INCREASING ENERGY LOADS.

THE PV SUPPORTING TRELLIS, STEPPING OUT FROM THE BUILDING SUGGEST NEW ENGLAND FARMHOUSE GROWTH PATTERNS, ANTICIPATING THE CHANGING SIZE OF FAMILIES AND USES OVER TIME. FORMAL ELEMENTS SUCH AS THE GABLE AND EXPOSED TIMBERS RECALL A TRADITIONAL BUILDING STYLE. MODERN ELEMENTS SUCH AS THE PHOTO VOLTAIC ARRAYS AND OTHER TECHNOLOGIES HAVE BEEN ASSIMILATED SMOOTHLY INTO THE DESIGN.

A FLEXIBLE INTERIOR LAYOUT RESULTED FROM AN IN-DEPTH STUDY OF JOHN HABRAKEN'S *OPEN BUILDING* CONCEPT, ARTICULATED IN HIS BOOK *SUPPORTS: AN ALTERNATIVE TO MASS HOUSING* AS WELL AS STEVEN KENDALL'S *RESIDENTIAL OPEN BUILDING*. THE 4-D HOME EXPLORES THIS CONCEPT IN A DESIGN THAT ALLOWS FOR DRAMATICALLY RECONFIGURED SPACES. DIVIDING WALLS SET ON MOVABLE TRACKS ALLOW THE HOUSE TO EASILY TRANSFORM FROM A TWO BEDROOM HOUSE TO ONE LARGE STUDIO FOR A SMALLER NUMBER OF OCCUPANTS, OR TO SIMPLY ACCOMMODATE A LARGE GROUP OR EXTENDED FAMILY GATHERING IN A MATTER OF MINUTES.

ARCHITECTURE
SOLAR DECATHLON
CONSTRUCTION DOCUMENTS

GENERAL ARCHITECTURAL NOTES

1. REFER TO DESIGN DRAWINGS, DETAILS, SPECIFICATIONS, AND STANDARDS.
2. DO NOT SCALE OR REPLICATE/REINTERPRET DRAWINGS. IN CASE OF QUESTION, CONSULT ARCHITECT.
3. FIRE RATING ON WALL INDICATES ENTIRE LENGTH OF WALL IS TO BE RATED.
4. ALL PIPING, DUCTS, ELECTRICAL CONDUITS, ETC. THAT PENETRATE THE BUILDING ENVELOPE ARE TO BE INSULATED SO AS TO MAINTAIN INDICATED FIRE RATING AND STRUCTURAL INTEGRITY.
5. ALL RATINGS ARE TO COMPLY WITH UNDERWRITERS LABORATORIES TEST RATINGS (UL RATING).
6. UNLESS OTHERWISE NOTED, ALL DIMENSIONS ARE TO CENTER LINE OF OBJECT.
7. PROVIDE PROPERLY INSTALLED INSULATION WITH VAPOR BARRIER BETWEEN ALL EXTERIOR ENVELOPE AND INTERIOR CONDITIONED SPACES, WHETHER SPECIFIED OR NOT.
8. ALL JOINTS, BREAKS, AND PENETRATIONS OF THERMAL/VAPOR BARRIER ARE TO BE SUPPLEMENTED WITH ADHESIVE/SEALANT TO MAINTAIN CONTINUOUS THERMAL/VAPOR BARRIER.
9. DETAILS NOT SHOWN ARE SIMILAR IN CHARACTER AND DESIGN TO THOSE DETAILED.
10. DISSIMILAR METALS ARE TO BE ISOLATED FROM EACH OTHER WITH A PROPER MATERIAL TO PREVENT CHEMICAL REACTION/BREAKDOWN.
11. ALL SILLS, WINDOW HEADS, DOOR HEADS, AND SIMILAR SHELF ANGLES ARE TO HAVE FLASHING TO THE EXTERIOR OF WALL, WHETHER DRAWN OR NOT.
12. ALL GLAZING IS TO BE CERTIFIED SAFETY GLASS, WITH CERTIFICATION THAT EACH PRODUCT CONFORMS TO APPLICABLE CONSUMER SAFETY PRODUCT STANDARDS.
13. WHERE DISCREPANCIES EXIST BETWEEN DRAWINGS AND CONSTRUCTION TRADE PRACTICES, CONSULT ARCHITECT BEFORE PROCEEDING WITH WORK.
14. ALL REFUSE AND DEBRIS SHALL BE REMOVED FROM THE SITE AND LEGALLY DISPOSED OF BY THE CONTRACTOR.

TEAM NAME: TEAM MASSACHUSETTS

ADDRESS: MASSART 621 HUNTINGTON AVE. BOSTON MA 02115

CONTACT: SPENCER CULHANE 602.677.6388 SPENCER.CULHANE@4DHOME.US WWW.4DHOME.US

CONSULTANTS

EPOCH HOMES

PASSIVE HOUSE INSTITUTE US

SLADEN FEINSTEIN INTEGRATED LIGHTING

LEMESSURIER CONSULTANTS, STRUCTURAL ENGINEERS

CLIENT

U.S. DEPARTMENT OF ENERGY

SOLAR DECATHLON 2011

WWW.SOLARDECATHLON.GOV

MARK	DATE	DESCRIPTION

LOT NUMBER:	NA
DRAWN BY:	SC_FL_EC
CHECKED BY:	PH
COPYRIGHT:	NONE: PROJECT IS PUBLIC DOMAIN

SHEET TITLE

ARCHITECTURAL SYMBOLS AND NOTES

A-001

8/12/2011 8:38:37 PM

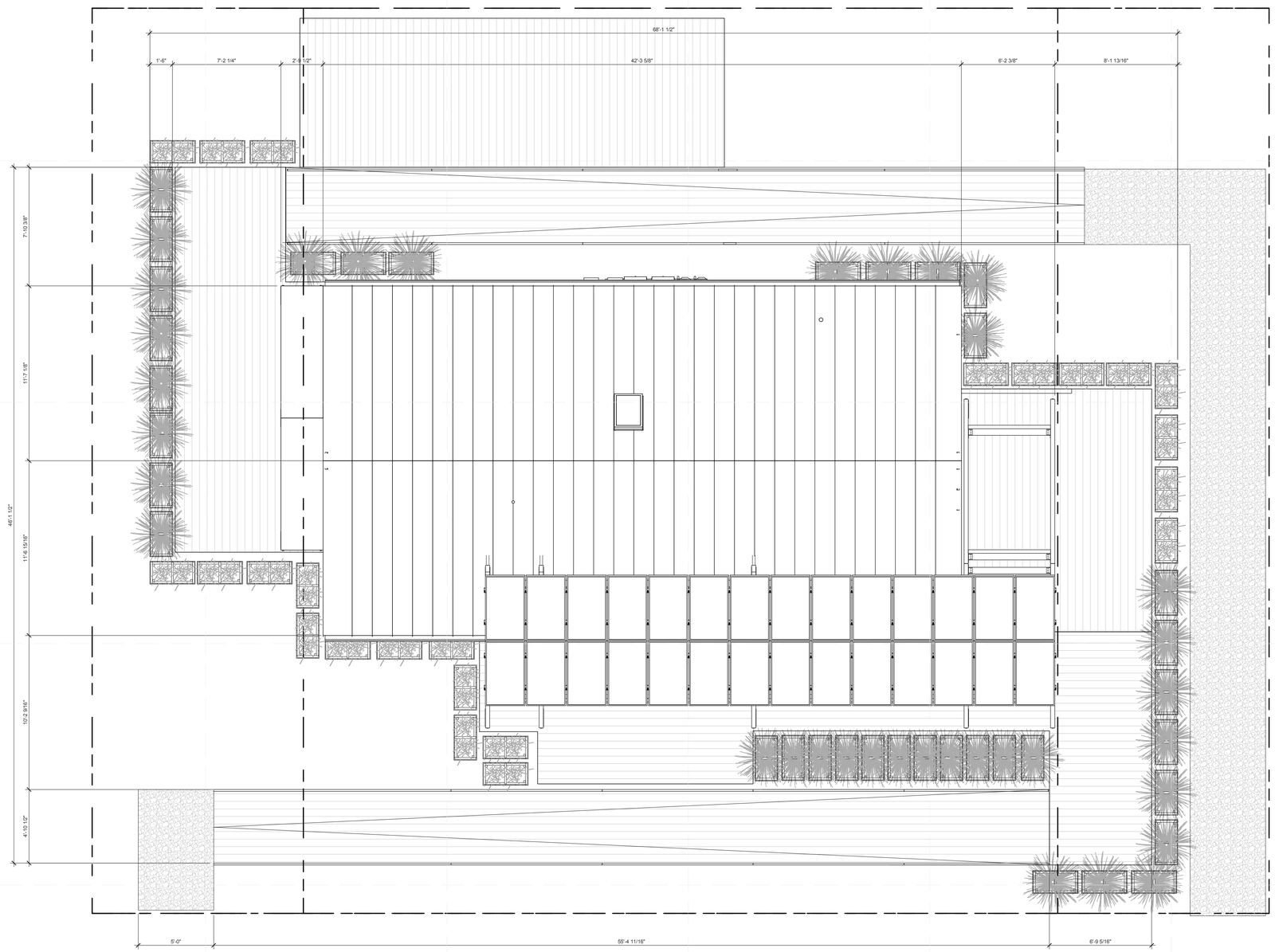

A1 SITE PLAN
1/4" = 1'-0"

0 2' 4' 8'

8/12/2011 8:39:17 PM

GENERAL SHEET NOTES

1. ALL COMPETITION WATER TANKS TO BE ELEVATED A MINIMUM OF 3-1/2" ABOVE GRADE.
2. ALL BUILDING ELEMENTS TO RESIDE WTIHIN COMPETITION DEFINED SOLAR ENVELOPE.
3. ALL FOUNDATION AND AUXILIARY ELEMENTS RESIDING ON GRADE SHALL NOT EXCEED THE MAXIMUM ALLOWABLE SOIL LOAD OF 1500 PSF.
4. ALL CONSTRUCTION ACTIVITY AND EQUIPMENT USE TO CONFORM TO RULE 4 OF SOLAR DECATHLON 2011 RULES.
5. SITE TO REMAIN ADA COMPLIANT AT ALL TIMES.
6. FOR CALCULATIONS REGARDING SOIL SURFACE IMPACT ON THE MALL, SEE PROJECT MANUAL.

REFERENCE KEYNOTES

SHEET KEYNOTES

4D HOME

TEAM NAME: TEAM MASSACHUSETTS

ADDRESS: MASSART
621 HUNTINGTON AVE.
BOSTON MA 02115

CONTAC: SPENCER CULHANE 602.677.6388
SPENCER.CULHANE@4DHOME.US
WWW.4DHOME.US

CONSULTANTS

EPOCH HOMES

PASSIVE HOUSE INSTITUTE US

SLADEN FEINSTEIN INTEGRATED LIGHTING

LEMESSURIER CONSULTANTS, STRUCTURAL ENGINEERS

CLIENT

U.S. DEPARTMENT OF ENERGY

SOLAR DECATHLON 2011

WWW.SOLARDECATHLON.GOV

U.S. DEPARTMENT OF ENERGY SOLAR DECATHLON

MARK	DATE	DESCRIPTION

LOT NUMBER: NA

DRAWN BY: SC_FL_EC

CHECKED BY: PH

COPYRIGHT: NONE: PROJECT IS PUBLIC DOMAIN

SHEET TITLE

SITE PLAN

A-101

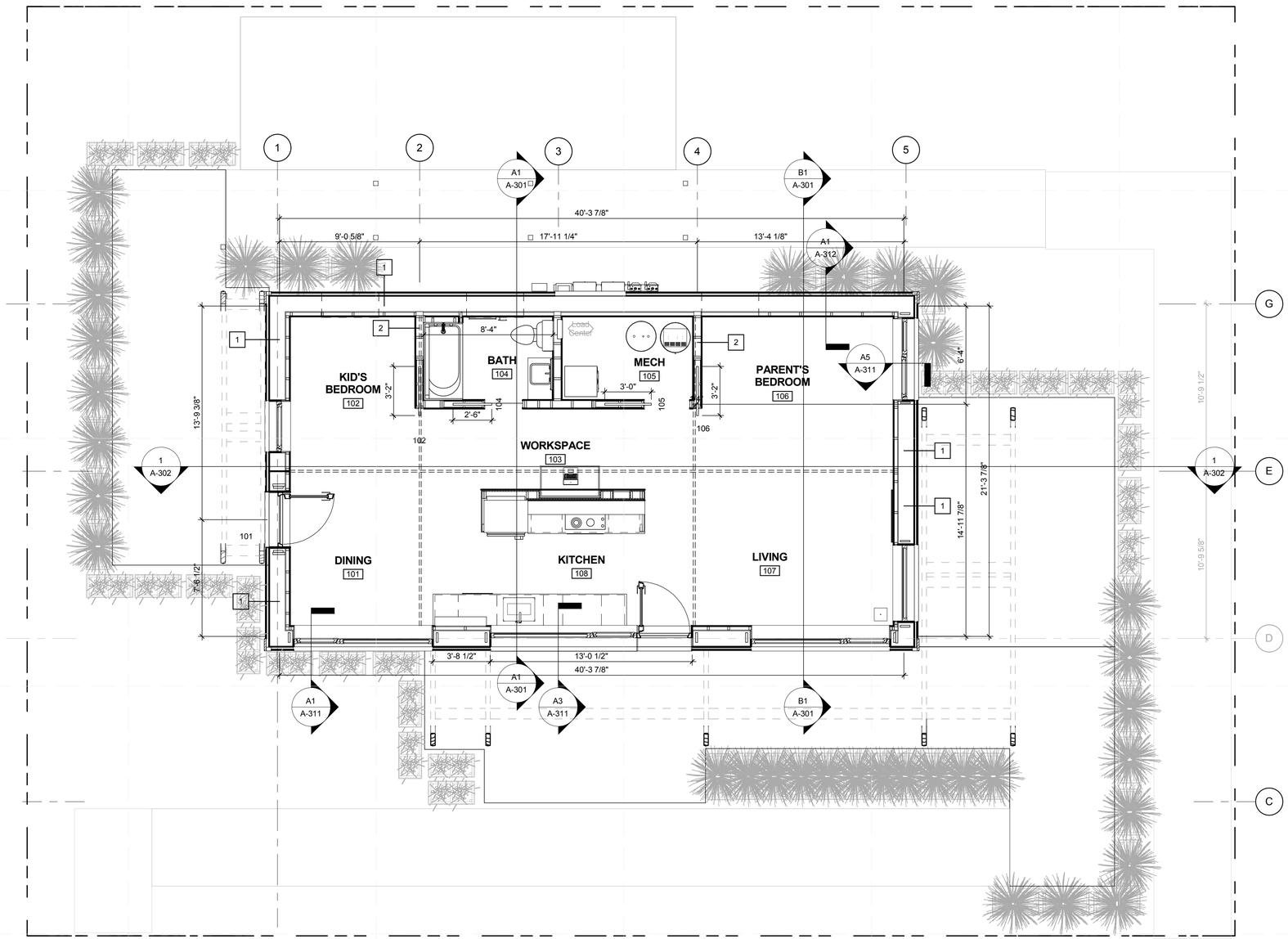

A1 FLOOR PLAN
1/4" = 1'-0"

0 2' 4' 8'

8/12/2011 8:40:01 PM

GENERAL SHEET NOTES

1. FOR DIMENSIONS OF WALL TYPE 5 REFER TO INTERIOR DESIGN PLAN ON PAGE I-101
2. WINDOWS ARE DIMENSIONS TO CENTERLINE OF ROUGH OPENING.
3. MAXIMUM ALLOWABLE SOIL BEARING PRESSURE TO BE < 1500PSF.
4. REFER TO CIVIL DRAWINGS FOR SITE PREPARATION, INITIAL HOME PLACEMENT, ELEVATIONS AND WALKWAY DIMENSIONS.
5. SITE TO REMAIN ADA COMPLIANT AT ALL TIMES.
6. FOR CALCULATIONS REGADRING SOIL SURFACE IMPACT ON THE MALL, SEE PROJECT MANUAL.
7. DETAILS NOT SHOWN ARE SIMILAR IN CHARACTER TO THOSE SHOWN.
8. WHETHER SPECIFICALLY SHOWN OR NOT, PROVIDE INSULATION WITH VAPOR BARRIER BETWEEN ALL EXTERIOR AND INTERIOR HEATED SPACES TO MAINTAIN DESIGN U VALUES.
9. ALL RATINGS ARE COMPLIANT WITH UNDERWRITERS LABORATORIES (UL) TEST RATINGS.
10. FIRE RATING INDICATED ON A WALL SHALL MEAN THE ENTIRE LENGTH OF THE WALL IS TO BE FRIE RATED.
11. ALL FEUSE AND DEBRIS SHALL BE REMOVED FROM THE DITE AND LEGALLY DISPOSED OF BY THE CONTRACTOR.
12. DIMENSIONS FOR AREAS DRAWN AT A LARGER SCALE ARE SHOWN ON ENLARGED SCALE PLANS.
13. THE USE OF SPECIFICATION SECTION NUMBERS WITHIN KEYNOTES OR ELSEWHERE ON THE DRAWINGS IS MADE SOLEY FOR CONVENIENCE IN COORDINATION AND WITHOUT LIMITATION. THE CONTRACTOR IS RESPONSIBLE FOR PROVIDING THE WORK IN ACCORDANCE TO THE CONTRACT DOCUMENTS IN THE ENTIRETY.

REFERENCE KEYNOTES

SHEET KEYNOTES

4D HOME

TEAM NAME:	TEAM MASSACHUSETTS
ADDRESS:	MASSART 621 HUNTINGTON AVE. BOSTON MA 02115
CONTACT:	SPENCER CULHANE 602.677.6388 SPENCER.CULHANE@4DHOME.US WWW.4DHOME.US

CONSULTANTS

EPOCH HOMES

PASSIVE HOUSE INSTITUTE US

SLADEN FEINSTEIN INTEGRATED LIGHTING

LEMESSURIER CONSULTANTS, STRUCTURAL ENGINEERS

CLIENT

U.S. DEPARTMENT OF ENERGY

SOLAR DECATHLON 2011

WWW.SOLARDECATHLON.GOV

U.S. DEPARTMENT OF ENERGY SOLAR DECATHLON

MARK	DATE	DESCRIPTION

LOT NUMBER:	NA
DRAWN BY:	SC_FL_EC
CHECKED BY:	PH
COPYRIGHT:	NONE: PROJECT IS PUBLIC DOMAIN

SHEET TITLE

FIRST FLOOR PLAN

A-102

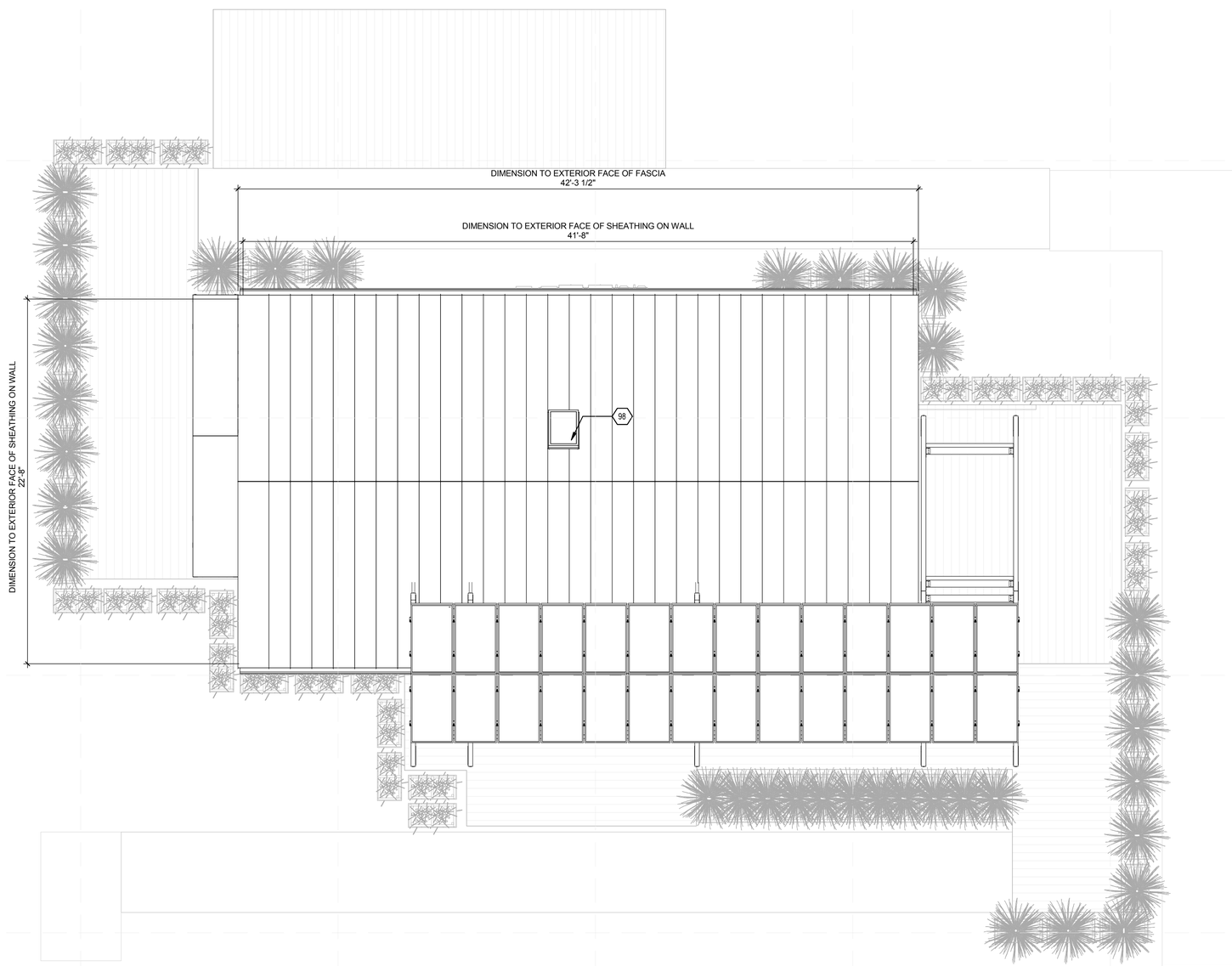

A1 ROOF PLAN
1/4" = 1'-0"

0 2' 4' 8'

8/12/2011 8:40:42 PM

GENERAL SHEET NOTES

1. ANY ELEVATED MAINTENANCE OR CONSTRUCTION WORK REQUIRES THE USE OF PERSONAL FALL ARREST SYSTEMS EQUIPMENT. USE OF NEAREST CONNECTION POINTS PROVIDED ON ROOF AND OUTLINED IN THE DRAWING SET ARE REQUIRED WITH THESE SYSTEMS PER SOLAR DECATHLON RULES
2. ROOF CONSTRUCTION TO BE UL TESTED CONSTRUCTION. REFER TO SPECIFICATIONS FOR TYPE
3. SLOPE OF ROOF SHOWN IS APPROXIMATE. REFER TO STRUCTURAL DRAWINGS FOR EXACT CONSTRUCTION TOLERANCES AND ANGLES.

REFERENCE KEYNOTES

SHEET KEYNOTES

98	ROTO FRANK SKY LIGHT 21.3" X 30.7"

4D HOME

TEAM NAME: TEAM MASSACHUSETTS

ADDRESS: MASSART 621 HUNTINGTON AVE. BOSTON MA 02115

CONTACT: SPENCER CULHANE 602.677.6388 SPENCER.CULHANE@4DHOME.US WWW.4DHOME.US

CONSULTANTS

EPOCH HOMES

PASSIVE HOUSE INSTITUTE US

SLADEN FEINSTEIN INTEGRATED LIGHTING

LEMESSURIER CONSULTANTS, STRUCTURAL ENGINEERS

CLIENT

U.S. DEPARTMENT OF ENERGY

SOLAR DECATHLON 2011

WWW.SOLARDECATHLON.GOV

U.S. DEPARTMENT OF ENERGY SOLAR DECATHLON

MARK	DATE	DESCRIPTION

LOT NUMBER:	NA
DRAWN BY:	SC_FL
CHECKED BY:	PH
COPYRIGHT:	NONE: PROJECT IS PUBLIC DOMAIN

SHEET TITLE

ROOF PLAN

A-103

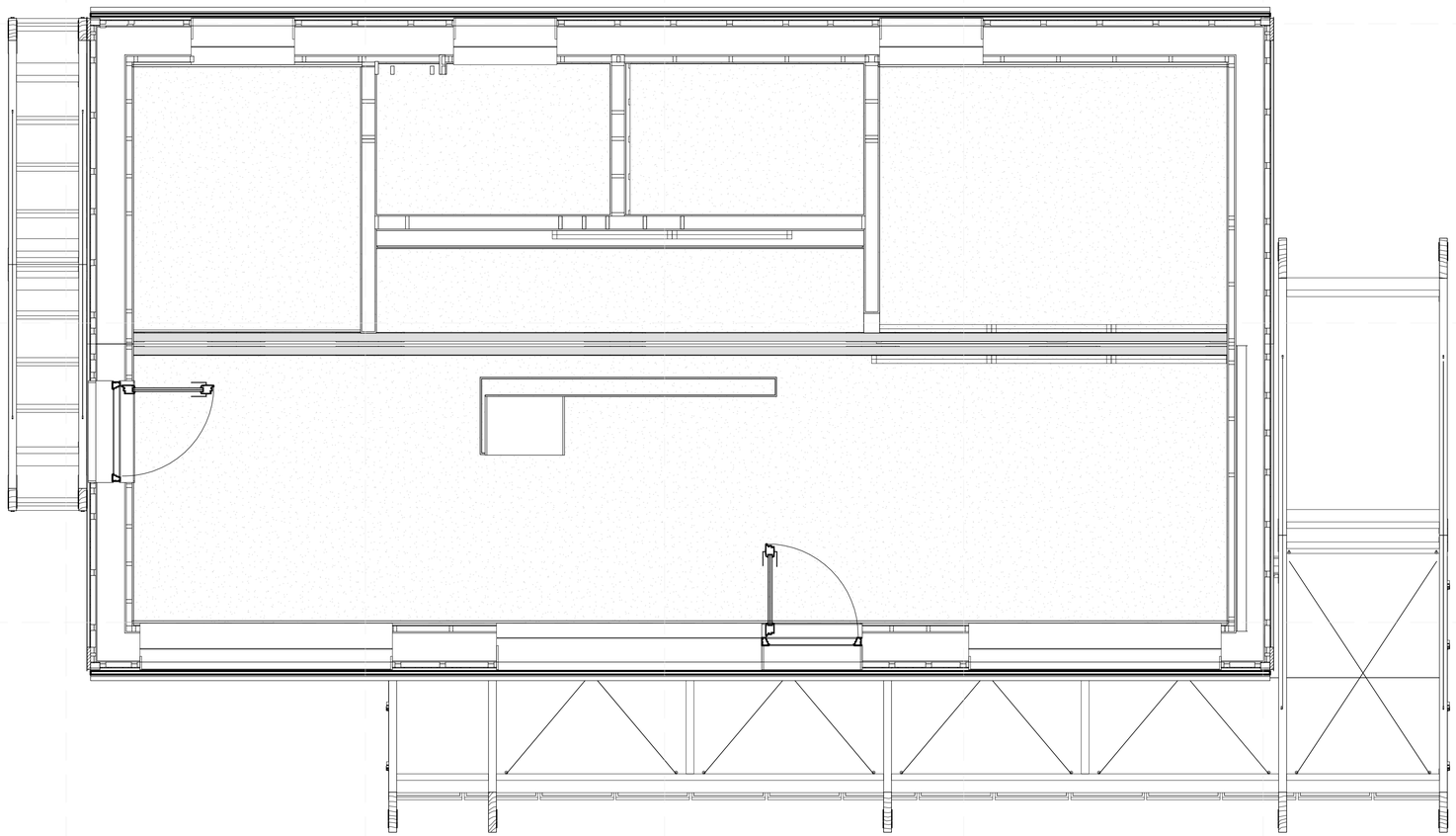

A1 FFL LEVEL 01
3/8" = 1'-0"

0 2' 4' 6'

GENERAL SHEET NOTES

1. REFLECTED CEILING PLAN SHOWN FOR COORDINATION PURPOSES.
2. ALL ELEMENTS TO BE CENTERED WITHIN THE OVERALL SPACE BASED ON CONSTRUCTION AS BUILT.
3. IF CONFLICT BETWEEN DIAGRAMMED CEILING GRID AND ACTUAL CONSTRUCTION ELEMENTS OCCURS, CONTACT ARCHITECT PRIOR TO INSTALLATION.

REFERENCE KEYNOTES

SHEET KEYNOTES

TEAM NAME: TEAM MASSACHUSETTS
ADDRESS: MASSART 621 HUNTINGTON AVE. BOSTON MA 02115
CONTACT: SPENCER CULHANE 602.677.6388 SPENCER.CULHANE@4DHOME.US WWW.4DHOME.US

CONSULTANTS

EPOCH HOMES
PASSIVE HOUSE INSTITUTE US
SLADEN FEINSTEIN INTEGRATED LIGHTING
LEMESSURIER CONSULTANTS, STRUCTURAL ENGINEERS

CLIENT

U.S. DEPARTMENT OF ENERGY
SOLAR DECATHLON 2011
WWW.SOLARDECATHLON.GOV

MARK	DATE	DESCRIPTION

LOT NUMBER:	NA
DRAWN BY:	SC_FL_EC
CHECKED BY:	PH
COPYRIGHT:	NONE: PROJECT IS PUBLIC DOMAIN

SHEET TITLE

FIRST FLOOR REFLECTED CEILING PLAN

A-104

8/12/2011 8:40:52 PM

C1 EAST SITE ELEVATION
1/4" = 1'-0"

0 2' 4' 8'

A1 WEST SITE ELEVATION
1/4" = 1'-0"

0 2' 4' 8'

GENERAL SHEET NOTES

1. FOR PLACEMENT OF ARCHITECTURAL ELEMENTS, REFER TO FLOORPLANES.
2. ALL HEIGHTS RELATIVE TO THE FINISHED FLOOR LEVEL. THE DISTANCE ABOVE GRADE MAY VARY DEPENDING ON SITE CONDITIONS.
3. ALL EXPOSED WOOD TO BE TREATED PER SPECIFICATION.
4. DO NOT SCALE DRAWINGS. USE DIMENSIONED NUMBERS AND FIELD NUMBERS ONLY.

REFERENCE KEYNOTES

SHEET KEYNOTES

4D HOME

TEAM NAME:	TEAM MASSACHUSETTS
ADDRESS:	MASSART 621 HUNTINGTON AVE. BOSTON MA 02115
CONTACT:	SPENCER CULHANE 602.677.6388 SPENCER.CULHANE@4DHOME.US WWW.4DHOME.US

CONSULTANTS

EPOCH HOMES

PASSIVE HOUSE INSTITUTE US

SLADEN FEINSTEIN INTEGRATED LIGHTING

LEMESSURIER CONSULTANTS, STRUCTURAL ENGINEERS

CLIENT

U.S. DEPARTMENT OF ENERGY

SOLAR DECATHLON 2011

WWW.SOLARDECATHLON.GOV

U.S. DEPARTMENT OF ENERGY SOLAR DECATHLON

MARK	DATE	DESCRIPTION

LOT NUMBER:	NA
DRAWN BY:	SC_FL
CHECKED BY:	PH
COPYRIGHT:	NONE: PROJECT IS PUBLIC DOMAIN

SHEET TITLE

SITE ELEVATIONS

A-201

8/12/2011 8:41:32 PM

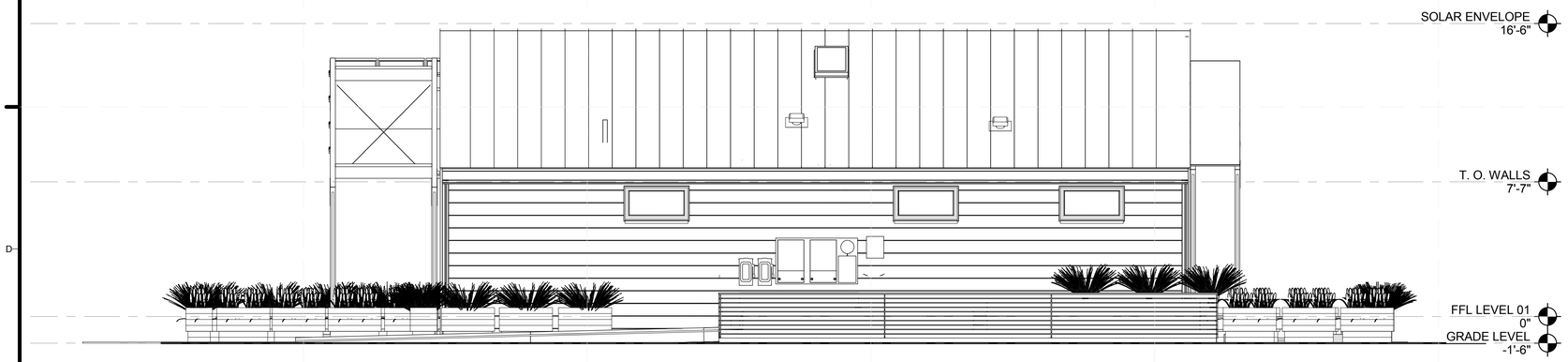

C1 NORTH SITE ELEVATION
1/4" = 1'-0"

0 2' 4' 8'

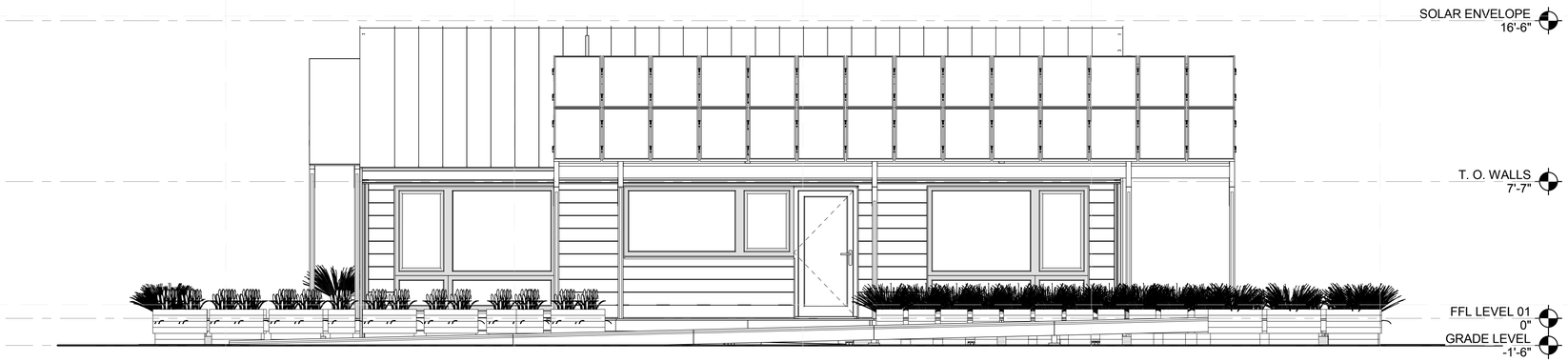

A1 SOUTH SITE ELEVATION
1/4" = 1'-0"

0 2' 4' 8'

GENERAL SHEET NOTES

1. FOR PLACEMENT OF ARCHITECTURAL ELEMENTS, REFER TO FLOORPLANES.
2. ALL HEIGHTS RELATIVE TO THE FINISHED FLOOR LEVEL. THE DISTANCE ABOVE GRADE MAY VARY DEPENDING ON SITE CONDITIONS.
3. ALL EXPOSED WOOD TO BE TREATED PER SPECIFICATION.
4. DO NOT SCALE DRAWINGS. USE DIMENSIONED NUMBERS AND FIELD NUMBERS ONLY.

REFERENCE KEYNOTES

SHEET KEYNOTES

4D HOME

TEAM NAME: TEAM MASSACHUSETTS
ADDRESS: MASSART 621 HUNTINGTON AVE. BOSTON MA 02115
CONTACT: SPENCER CULHANE 602.677.6388 SPENCER.CULHANE@4DHOME.US WWW.4DHOME.US

CONSULTANTS

EPOCH HOMES
PASSIVE HOUSE INSTITUTE US
SLADEN FEINSTEIN INTEGRATED LIGHTING
LEMESSURIER CONSULTANTS, STRUCTURAL ENGINEERS

CLIENT

U.S. DEPARTMENT OF ENERGY
SOLAR DECATHLON 2011
WWW.SOLARDECATHLON.GOV

U.S. DEPARTMENT OF ENERGY SOLAR DECATHLON

MARK	DATE	DESCRIPTION

LOT NUMBER:	NA
DRAWN BY:	SC_FL
CHECKED BY:	PH
COPYRIGHT:	NONE: PROJECT IS PUBLIC DOMAIN

SHEET TITLE

SITE ELEVATIONS

A-202

8/12/2011 8:42:14 PM

C1 BUILDING EAST ELEVATION
1/4" = 1'-0"

0 2' 4' 8'

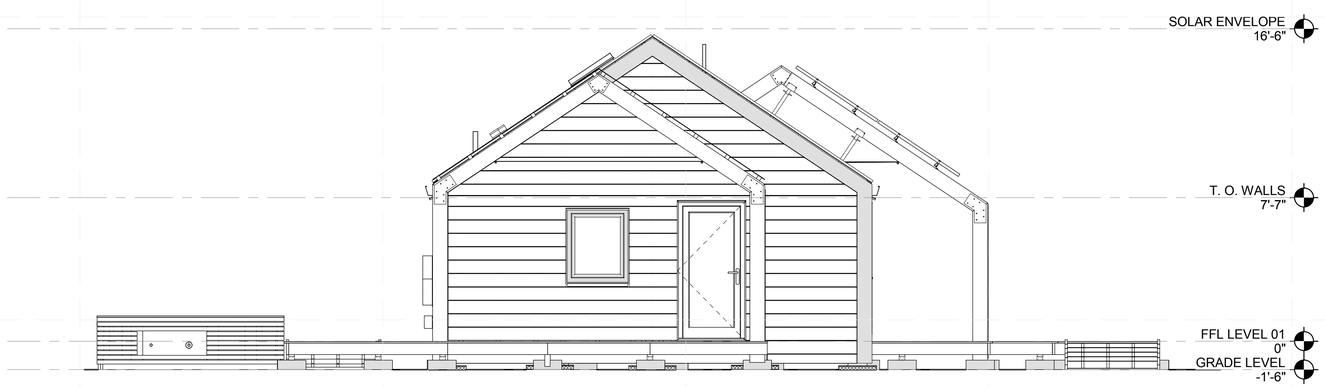

A1 BUILDING WEST ELEVATION
1/4" = 1'-0"

0 2' 4' 8'

GENERAL SHEET NOTES

1. FOR PLACEMENT OF ARCHITECTURAL ELEMENTS, REFER TO FLOORPLANES.
2. ALL HEIGHTS RELATIVE TO THE FINISHED FLOOR LEVEL. THE DISTANCE ABOVE GRADE MAY VARY DEPENDING ON SITE CONDITIONS.
3. ALL EXPOSED WOOD TO BE TREATED PER SPECIFICATION.
4. DO NOT SCALE DRAWINGS. USE DIMENSIONED NUMBERS AND FIELD NUMBERS ONLY.
5. MAXIMUM ELEVATION DIFFERENCE BETWEEN HIGHEST GRADE POINT ON SITE AND TOP OF ROOF TO BE 18'-0". IF A POTENTIAL VIOLATION OF THIS REQUIREMENT EXISTS, CONTACT ARCHITECT PRIOR TO CONSTRUCTION.
6. DASHED LINES INDICATE SITE ELEMENTS. REFER TO L-SERIES DRAWINGS FOR DETAILS.
7. COORDINATE ALL ROOF PENETRATIONS WITH MECHANICAL AND ELECTRICAL CONTRACTORS.
8. LOCATIONS OF ELEMENTS SHOWN IN ELEVATION ARE FOR COORDINATION PURPOSES ONLY. REFER TO DETAILS AND PLANS FOR DIMENSIONAL REQUIREMENTS.

REFERENCE KEYNOTES

SHEET KEYNOTES

4D HOME

TEAM NAME: TEAM MASSACHUSETTS
ADDRESS: MASSART 621 HUNTINGTON AVE. BOSTON MA 02115
CONTACT: SPENCER CULHANE 602.677.6388 SPENCER.CULHANE@4DHOME.US WWW.4DHOME.US

CONSULTANTS

EPOCH HOMES

PASSIVE HOUSE INSTITUTE US

SLADEN FEINSTEIN INTEGRATED LIGHTING

LEMESSURIER CONSULTANTS, STRUCTURAL ENGINEERS

CLIENT

U.S. DEPARTMENT OF ENERGY

SOLAR DECATHLON 2011

WWW.SOLARDECATHLON.GOV

U.S. DEPARTMENT OF ENERGY SOLAR DECATHLON

MARK	DATE	DESCRIPTION

LOT NUMBER:	NA
DRAWN BY:	SC_FL
CHECKED BY:	PH
COPYRIGHT:	NONE: PROJECT IS PUBLIC DOMAIN

SHEET TITLE

ELEVATIONS

A-211

8/12/2011 8:42:26 PM

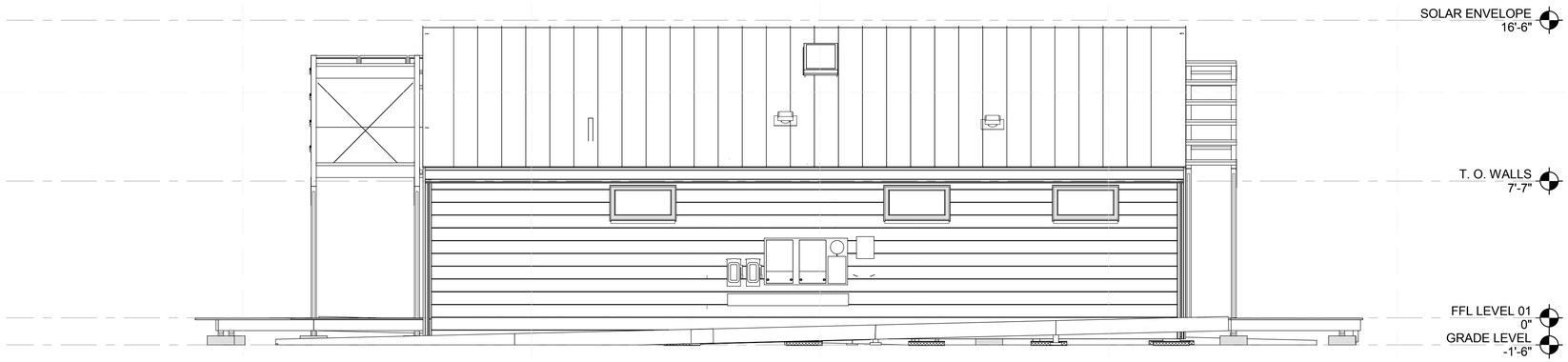

C1 BUILDING NORTH ELEVATION
1/4" = 1'-0"

0 2' 4' 8'

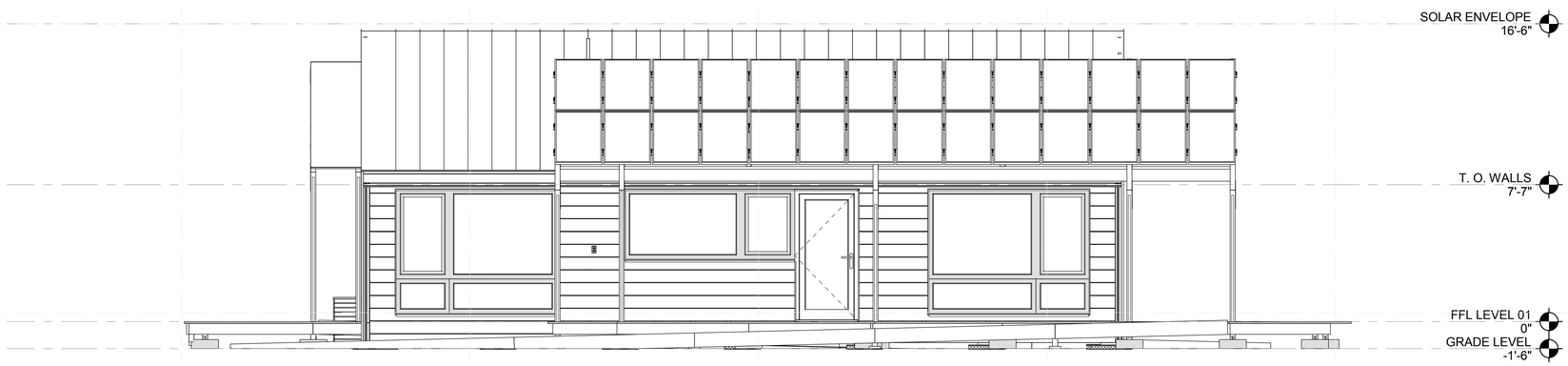

A1 BUILDING SOUTH ELEVATION
1/4" = 1'-0"

0 2' 4' 8'

GENERAL SHEET NOTES

1. FOR PLACEMENT OF ARCHITECTURAL ELEMENTS, REFER TO FLOORPLANES.
2. ALL HEIGHTS RELATIVE TO THE FINISHED FLOOR LEVEL. THE DISTANCE ABOVE GRADE MAY VARY DEPENDING ON SITE CONDITIONS.
3. ALL EXPOSED WOOD TO BE TREATED PER SPECIFICATION.
4. DO NOT SCALE DRAWINGS. USE DIMENSIONED NUMBERS AND FIELD NUMBERS ONLY.
5. MAXIMUM ELEVATION DIFFERENCE BETWEEN HIGHEST GRADE POINT ON SITE AND TOP OF ROOF TO BE 18'-0". IF A POTENTIAL VIOLATION OF THIS REQUIREMENT EXISTS, CONTACT ARCHITECT PRIOR TO CONSTRUCTION.
6. DASHED LINES INDICATE SITE ELEMENTS. REFER TO L-SERIES DRAWINGS FOR DETAILS.
7. COORDINATE ALL ROOF PENETRATIONS WITH MECHANICAL AND ELECTRICAL CONTRACTORS.
8. LOCATIONS OF ELEMENTS SHOWN IN ELEVATION ARE FOR COORDINATION PURPOSES ONLY. REFER TO DETAILS AND PLANS FOR DIMENSIONAL REQUIREMENTS.

REFERENCE KEYNOTES

SHEET KEYNOTES

TEAM NAME: TEAM MASSACHUSETTS
ADDRESS: MASSART 621 HUNTINGTON AVE. BOSTON MA 02115
CONTACT: SPENCER CULHANE 602.677.6388 SPENCER.CULHANE@4DHOME.US WWW.4DHOME.US

CONSULTANTS

EPOCH HOMES

PASSIVE HOUSE INSTITUTE US

SLADEN FEINSTEIN INTEGRATED LIGHTING

LEMESSURIER CONSULTANTS, STRUCTURAL ENGINEERS

CLIENT

U.S. DEPARTMENT OF ENERGY

SOLAR DECATHLON 2011

WWW.SOLARDECATHLON.GOV

MARK	DATE	DESCRIPTION

LOT NUMBER:	NA
DRAWN BY:	SC_FL
CHECKED BY:	PH
COPYRIGHT:	NONE: PROJECT IS PUBLIC DOMAIN

SHEET TITLE

ELEVATIONS

A-212

8/12/2011 8:42:36 PM

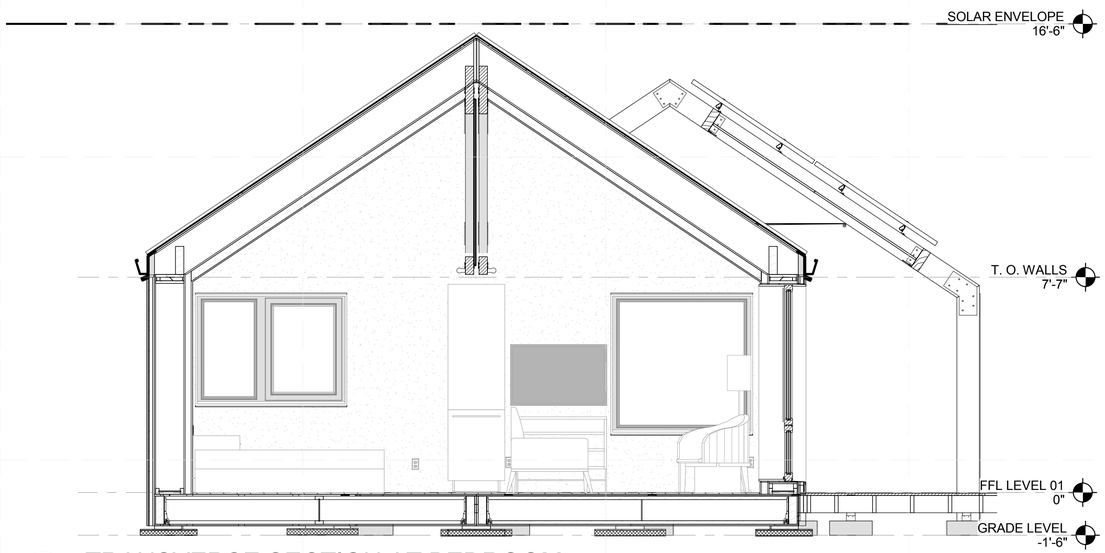

B1 TRANSVERSE SECTION AT BEDROOM
3/8" = 1'-0"

0 2' 4' 6'

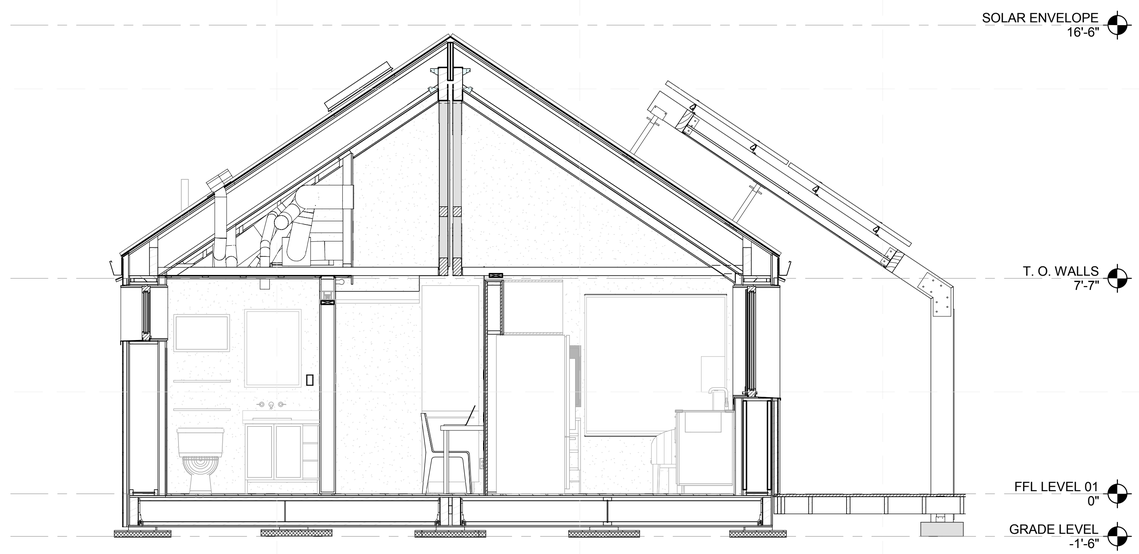

A1 TRANSVERSE SECTION
3/8" = 1'-0"

0 2' 4' 6'

GENERAL SHEET NOTES

REFERENCE KEYNOTES

SHEET KEYNOTES

4D HOME

TEAM NAME: TEAM MASSACHUSETTS
ADDRESS: MASSART 621 HUNTINGTON AVE. BOSTON MA 02115
CONTACT: SPENCER CULHANE 602.677.6388 SPENCER.CULHANE@4DHOME.US WWW.4DHOME.US

CONSULTANTS

EPOCH HOMES
PASSIVE HOUSE INSTITUTE US
SLADEN FEINSTEIN INTEGRATED LIGHTING
LEMESSURIER CONSULTANTS, STRUCTURAL ENGINEERS

CLIENT

U.S. DEPARTMENT OF ENERGY
SOLAR DECATHLON 2011
WWW.SOLARDECATHLON.GOV

U.S. DEPARTMENT OF ENERGY SOLAR DECATHLON

MARK	DATE	DESCRIPTION

LOT NUMBER:	NA
DRAWN BY:	SC_FL_EC
CHECKED BY:	PH
COPYRIGHT:	NONE: PROJECT IS PUBLIC DOMAIN

SHEET TITLE

TRANSVERSE BUILDING SECTION

A-301

8/12/2011 8:42:48 PM

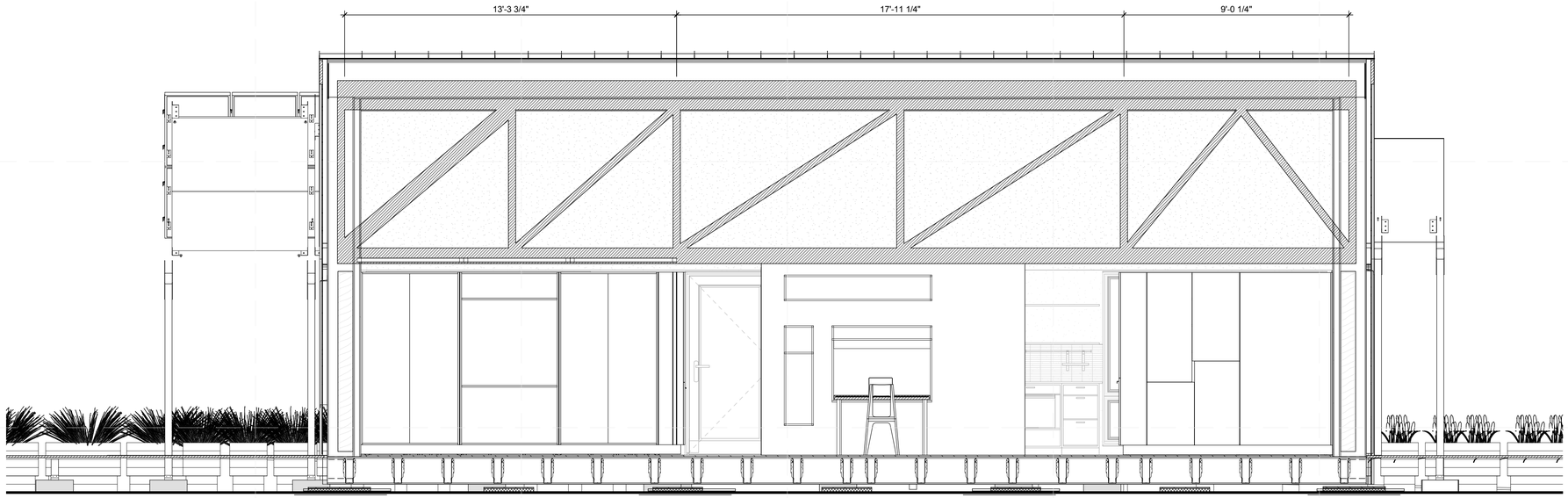

1 LONGITUDINAL SECTION
3/8" = 1'-0"

0 2' 4' 6'

GENERAL SHEET NOTES

REFERENCE KEYNOTES

SHEET KEYNOTES

4D HOME

TEAM NAME: TEAM MASSACHUSETTS

ADDRESS: MASSART
621 HUNTINGTON AVE.
BOSTON MA 02115

CONTACT: SPENCER CULHANE 602.677.6388
SPENCER.CULHANE@4DHOME.US
WWW.4DHOME.US

CONSULTANTS

EPOCH HOMES

PASSIVE HOUSE INSTITUTE US

SLADEN FEINSTEIN INTEGRATED LIGHTING

LEMESSURIER CONSULTANTS, STRUCTURAL ENGINEERS

CLIENT

U.S. DEPARTMENT OF ENERGY

SOLAR DECATHLON 2011

WWW.SOLARDECATHLON.GOV

U.S. DEPARTMENT OF ENERGY SOLAR DECATHLON

MARK	DATE	DESCRIPTION

LOT NUMBER:	NA
DRAWN BY:	SC_FL_EC
CHECKED BY:	Checker
COPYRIGHT:	NONE: PROJECT IS PUBLIC DOMAIN

SHEET TITLE

LONGITUDINAL BUILDING SECTION

A-302

8/12/2011 8:43:10 PM

8/12/2011 8:43:12 PM

A-533	WINDOW SILLS
A-535	Unnamed
F-713	FIRE PROTECTION NOTES AND SYMBOLS
O-105	DRY DOCK AVE. SITE OPERATIONS
O-106	DRY DOCK AVE. FOUNDATION SITE PLAN
X-801	HEXNER SITE PLAN
X-802	ARCHITECTURAL PLANS
Z-712	Unnamed
O-001	OPERATIONS SYMBOLS AND NOTES
G-001	COVER PAGE
G-002	GENERAL NOTES AND SYMBOLS
G-101	FINISHED SQUARE FOOTAGE COMPLIANCE PLAN
G-102	EGRESS PLAN
G-103	ADA TOUR ROUTE COMPLIANCE PLAN
G-201	SOLAR ENVELOPE COMPLIANCE ELEVATIONS
G-202	SOLAR ENVELOPE COPMLIANCE ELEVATIONS
G-601	SHADING DIAGRAMS
G-901	GENERAL PROJECT RENDERINGS
G-902	GENERAL PROJECT RENDERINGS
C-001	CIVIL NOTES AND SYMBOLS
C-501	VILLAGE LOCATION
C-502	LOT CONDITION ADJUSTMENT DETAILS
L-001	LANDSCAPE NOTES AND SYMBOLS
L-101	DECK AND RAMP PLAN
L-102	VEGETATION PLAN
S-001	STRUCTURAL NOTES AND SYMBOLS
S-101	FOUNDATION PLAN
S-102	FIRST FLOOR FRAMING PLAN
S-103	ROOF FRAMING PLAN
S-104	DECK FRAMING PLAN
S-201	FRAMING ELEVATIONS
S-202	MODULE BRACING
S-203	MODULE BRACING
S-301	FRAMING SECTIONS
S-302	ROOF MODULE DETAILS
S-502	TRUSS
S-601	REINFORCING AND FRAMING SCHEDULES
S-602	COLUMNN AND BEAM SCHEDULES
S-701	TYPICAL DETAILS
S-702	TYPICAL FRAMING DETAILS
S-703	TYPICAL DETAILS
S-704	TYPICAL FOOTING DETAILS
S-705	WEST MODULE CONNECTION DETAILS
S-706	EAST MODULE CONNECTION DEATILS
S-707	SOUTH TRELLIS
S-708	WEST TRELLIS
S-901	FRAMING ISOMETRICS
A-001	ARCHITECTURAL SYMBOLS AND NOTES
A-101	SITE PLAN
A-102	FIRST FLOOR PLAN
A-103	ROOF PLAN
A-104	FIRST FLOOR REFLECTED CEILING PLAN
A-201	SITE ELEVATIONS
A-202	SITE ELEVATIONS
A-211	ELEVATIONS
A-212	ELEVATIONS

A-301	TRANSVERSE BUILDING SECTION
A-302	LONGITUDINAL BUILDING SECTION
A-311	WALL SECTIONS
A-312	WALL SECTIONS
A-601	SCHEDULES
A-602	WINDOW SCHEDULE
A-604	SIDING DESIGN
A-801	MOVEABLE COMPONENT DIAGRAM
I-001	INTERIOR SYMBOLS AND NOTES
I-101	INTERIOR DESIGN PLAN
I-103	INTERIOR DESIGN REFLECTED CEILING PLAN
I-201	INTERIOR DESIGN ELEVATION
I-202	INTERIOR DESIGN ELEVATIONS
I-203	INTERIOR DESIGN ELEVATIONS
I-204	INTERIOR DESIGN ELEVATIONS
I-401	LARGE-SCALE KITCHEN DESIGN DRAWINGS
I-402	BATHROOM DETAILS
I-404	CENTRAL WALL
I-405	INTERIOR PERSPECTIVES
I-601	INTERIOR DESIGN SCHEDULES
F-101	FIRE DETECTION AND ALARM
F-102	FIRE SUPPRESSION
P-001	PLUMBING SYMBOLS AND NOTES
P-101	PLUMBING DISTRIBUTION PLAN
P-501	WATER TANK ENCLOSURE DETAILS
P-701	SOLAR THERMAL
P-901	PLUMBING ISOMETRIC
P-902	SCHEDULES
M-001	MECHANICAL SYMBOLS AND NOTES
M-101	HVAC EQUIPMENT AND DISTRIBUTION PLAN
M-201	MECHANICAL ELEVATIONS
M-601	SCHEDULES
M-602	HVAC DIAGRAMS
E-001	ELECTRICAL SYMBOLS AND NOTES
E-101	ELECTRICAL DISTRIBUTION PLAN
E-102	PV WIRING PLAN
E-103	LIGHTING PLAN
E-201	ELECTRICAL ELEVATIONS
E-202	ELECTRICAL ELEVATIONS
E-203	ELECTRICAL ELEVATIONS
E-204	ELECTRICAL ELEVATIONS
E-601	ONE-LINE DIAGRAM
E-602	THREE-LINE DIAGRAM
E-603	SCHEDULES
Z-702	TRUSS PLATE SHOP DRAWINGS
Z-703	TRUSS SHOP DRAWINGS
Z-704	TRUSS CUTLIST
Z-705	DECK FOOTING SHOP DRAWINGS
Z-708	TRELLIS PLATE SHOP DRAWINGS
Z-709	STEEL PLATE FOOTINGS
Z-710	STEEL PLATE FOOTINGS
O-101	

TEAM NAME: TEAM MASSACHUSETTS
ADDRESS: MASSART
621 HUNTINGTON AVE
BOSTON MA 02115
CONTACT: SPENCER CULHANE 602 877 6388
SPENCER.CULHANE@AD-HOME.US
ISSUE DATE: WWW.AD-HOME.US

U.S. DEPARTMENT OF ENERGY
SOLAR DECATHLON 2011
WWW.SOLARDECATHLON.GOV

LOT NUMBER: NA
DRAWN BY: Author
CHECKED BY: Checker

COPYRIGHT: NONE. PROJECT IS PUBLIC DOMAIN

CD SHEET REFERENCE

A-303

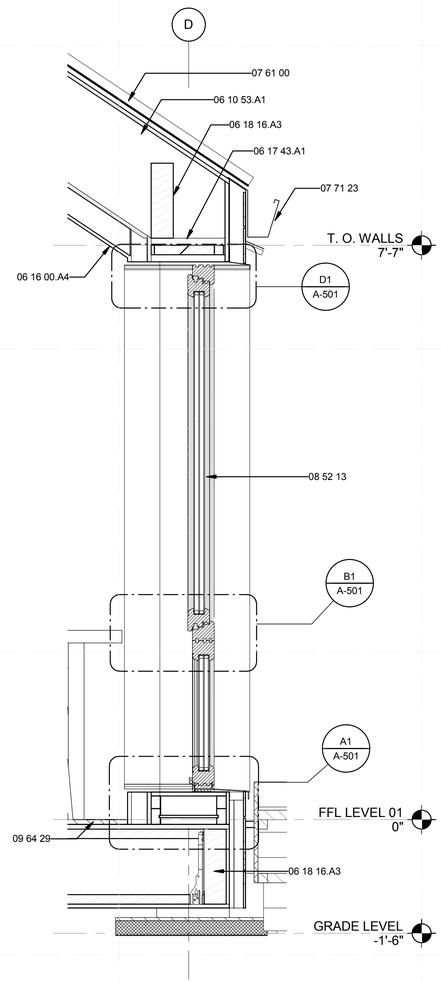

A1 WALL SECTION AT DINNING ROOM WIN.
1" = 1'-0"

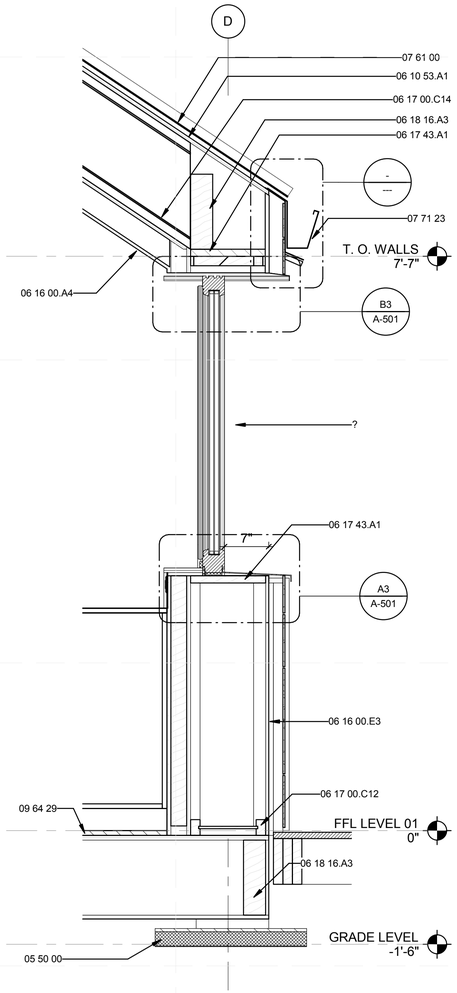

A3 WALL SECTION AT KITCHEN WIN.
1" = 1'-0"

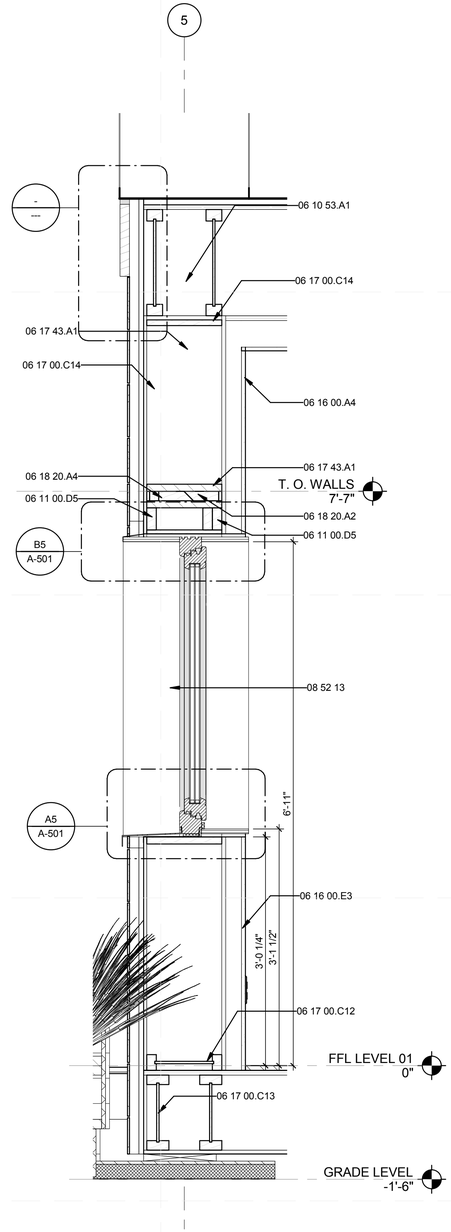

A5 WALL SECTION AT MASTER BEDROOM
1" = 1'-0"

GENERAL SHEET NOTES

REFERENCE KEYNOTES

05 50 00	METAL FABRICATIONS
06 10 53.A1	WEB STIFFENER
06 11 00.D5	2X4 FRAMING @ 16" O.C.
06 16 00.A4	5/8" GYPSUM SHEATHING
06 16 00.E3	5/8" T&G STRAND BOARD DECKING
06 17 00.C12	2 1/2" X 11 7/8" NORDIC I JOIST
06 17 00.C13	3 1/2" X 11 7/8" NORDIC I JOIST
06 17 00.C14	2 1/2" X 14" NORDIC I JOIST
06 17 43.A1	1 1/8" X 11 7/8" ADVANTECH RIM BOARD
06 18 16.A3	3 1/2" X 11 7/8" NORDIC LAM BEAM
06 18 20.A2	2 X10 NORDIC ENVIRO LAM
06 18 20.A4	2x6 NORDIC ENVIRO LAM
07 61 00	SHEET METAL ROOFING
07 71 23	MANUFACTURED GUTTERS AND DOWNSPOUTS
08 52 13	METAL-CLAD WOOD WINDOWS
09 64 29	WOOD STRIP AND PLANK FLOORING

SHEET KEYNOTES

4D HOME

TEAM NAME: TEAM MASSACHUSETTS
ADDRESS: MASSART 621 HUNTINGTON AVE. BOSTON MA 02115
CONTACT: SPENCER CULHANE 602.677.6388 SPENCER.CULHANE@4DHOME.US WWW.4DHOME.US

CONSULTANTS

EPOCH HOMES

PASSIVE HOUSE INSTITUTE US

SLADEN FEINSTEIN INTEGRATED LIGHTING

LEMESSURIER CONSULTANTS, STRUCTURAL ENGINEERS

CLIENT

U.S. DEPARTMENT OF ENERGY

SOLAR DECATHLON 2011

WWW.SOLARDECATHLON.GOV

U.S. DEPARTMENT OF ENERGY SOLAR DECATHLON

MARK	DATE	DESCRIPTION

LOT NUMBER:	NA
DRAWN BY:	FL
CHECKED BY:	PH
COPYRIGHT:	NONE: PROJECT IS PUBLIC DOMAIN

SHEET TITLE

WALL SECTIONS

A-311

8/12/2011 8:43:20 PM

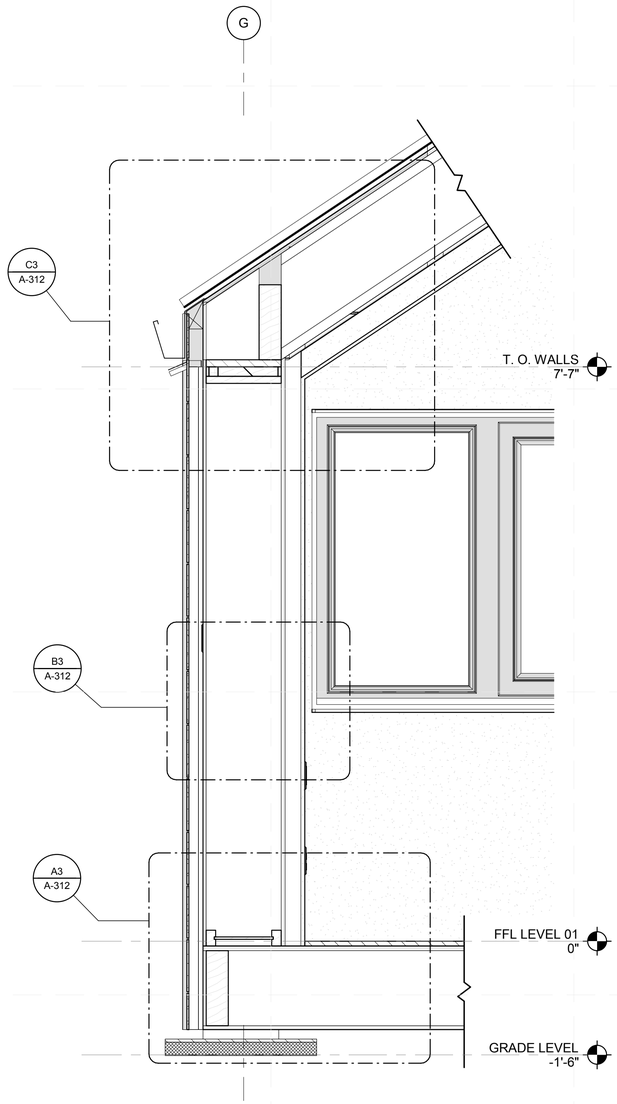

A1 TRANSVERSE SECTION
1" = 1'-0"

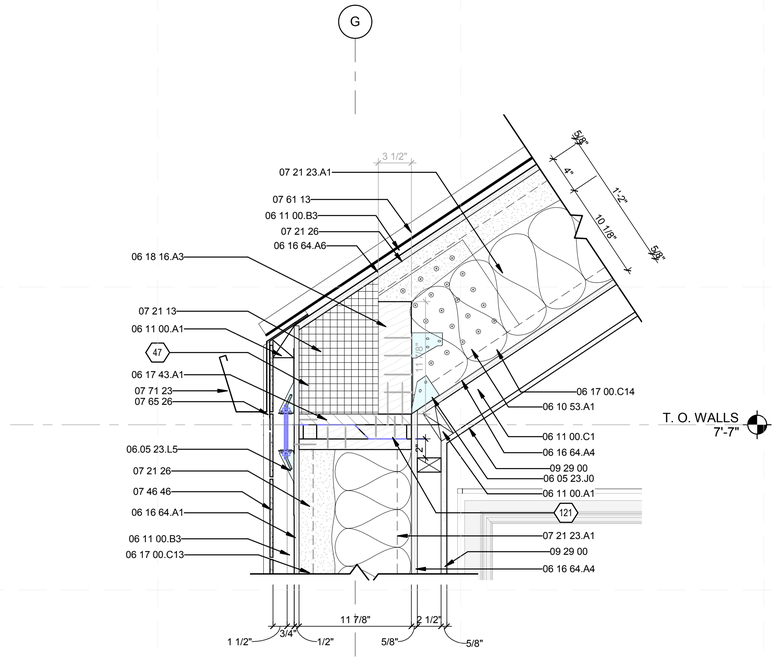

C3 TYP. ROOF TO WALL DETAIL
1 1/2" = 1'-0"

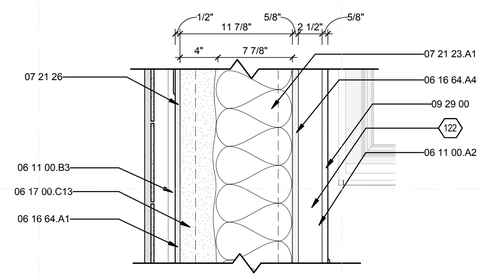

B3 TYP. WALL DETAIL
1 1/2" = 1'-0"

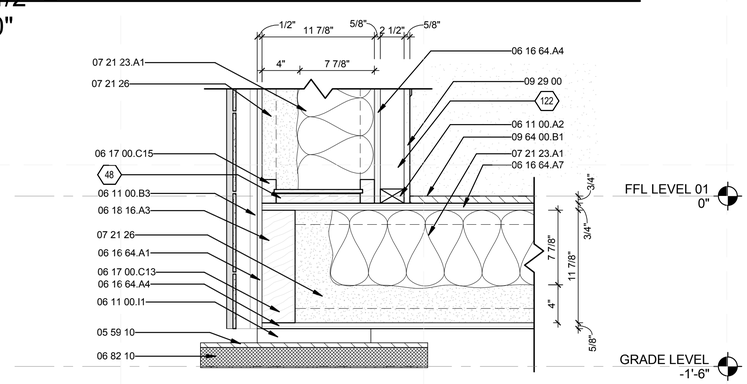

A3 TYP. WALL TO FLOOR DETAIL
1 1/2" = 1'-0"

GENERAL SHEET NOTES

REFERENCE KEYNOTES

05 59 10	1/2" STEEL PLATE FOOTING
06 05 23.J0	HANGERS
06 10 53.A1	WEB STIFFENER
06 11 00.A1	BLOCKING
06 11 00.A2	2X3 BLOCKING
06 11 00.B3	1X3
06 11 00.C1	2X3
06 11 00.I1	2X12
06 16 64.A1	1/2" HUBERT ZIP SHEATHING
06 16 64.A4	5/8" ADVANTECH SHEATHING
06 16 64.A6	5/8" ZIP T&G SHEATHING
06 16 64.A7	3/4" ADVANTECH SUB-FLOOR
06 17 00.C13	3 1/2" X 11 7/8" NORDIC I JOIST
06 17 00.C14	2 1/2" X 14" NORDIC I JOIST
06 17 00.C15	11 7/8" NORDIC JOIST KEY PLATE
06 17 43.A1	1 1/8" X 11 7/8" ADVANTECH RIM BOARD
06 18 16.A3	3 1/2" X 11 7/8" NORDIC LAM BEAM
06 82 10	FOAM GLASS
06.05 23.L5	SIMPSON DTT2Z
07 21 13	BOARD INSULATION
07 21 23.A1	BLOWN IN FIBERGLASS INSULATION
07 21 26	SPRAYED INSULATION
07 46 46	MINERAL-FIBER CEMENT SIDING
07 61 13	STANDING SEAM SHEET METAL ROOFING
07 65 26	SELF-ADHERING SHEET FLASHING
07 71 23	MANUFACTURED GUTTERS AND DOWNSPOUTS
09 29 00	GYPSUM BOARD
09 64 00.B1	3/8" HARDWOOD FLOORING

SHEET KEYNOTES

47	WOOD BLOCKING WHERE NEEDED FOR PICK POINTS AND HOLD DOWN
48	SOLE PLATE
121	MARRIAGE LINE
122	2X3 FURRING STRIP CHASE WALL

4D HOME

TEAM NAME: TEAM MASSACHUSETTS
ADDRESS: MASSART 621 HUNTINGTON AVE. BOSTON MA 02115
CONTACT: SPENCER CULHANE 602.677.6388 SPENCER.CULHANE@4DHOME.US WWW.4DHOME.US

CONSULTANTS

EPOCH HOMES

PASSIVE HOUSE INSTITUTE US

SLADEN FEINSTEIN INTEGRATED LIGHTING

LEMESSURIER CONSULTANTS, STRUCTURAL ENGINEERS

CLIENT

U.S. DEPARTMENT OF ENERGY

SOLAR DECATHLON 2011

WWW.SOLARDECATHLON.GOV

U.S. DEPARTMENT OF ENERGY SOLAR DECATHLON

MARK	DATE	DESCRIPTION

LOT NUMBER:	NA
DRAWN BY:	FL
CHECKED BY:	PH
COPYRIGHT:	NONE: PROJECT IS PUBLIC DOMAIN

SHEET TITLE

WALL SECTIONS

A-312

8/12/2011 8:43:27 PM

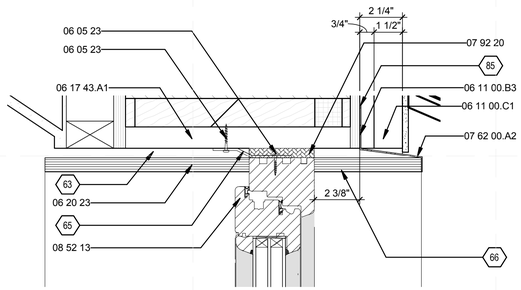

D1 TYP. TILT & TURN UPPER FRAME DETAIL
3" = 1'-0"

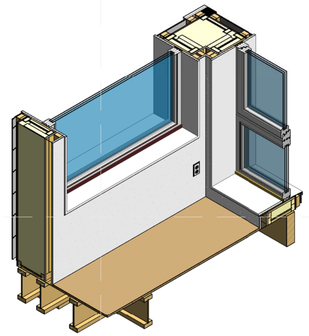

D3 CORNER WINDOWS AXON
NOT TO SCALE

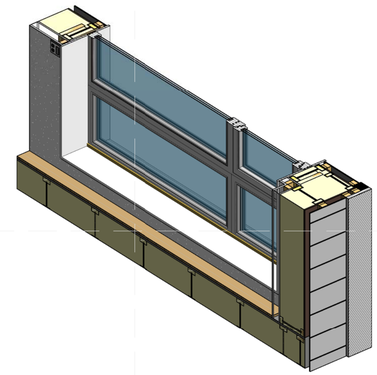

D5 DINNING/LIVING ROOM WINDOW AXON
NOT TO SCALE

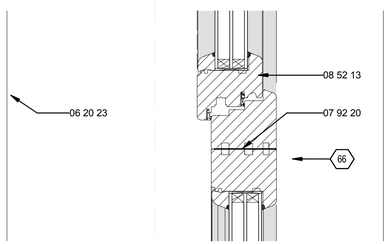

B1 TYP. COMBINED WINDOW CONNECTION
3" = 1'-0"

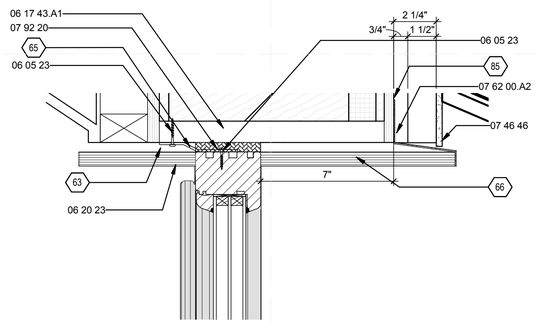

B3 TYP. COMBINED WINDOW FIXED UPPER DETAIL
3" = 1'-0"

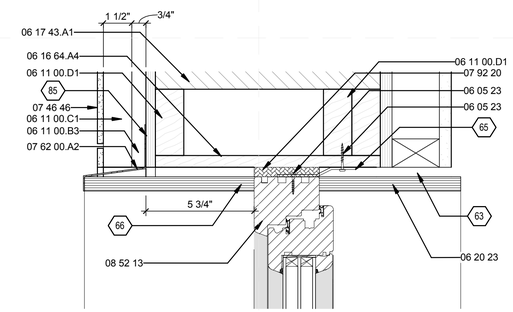

B5 TYP. TILT & TURN TOP FRAME DETAIL
3" = 1'-0"

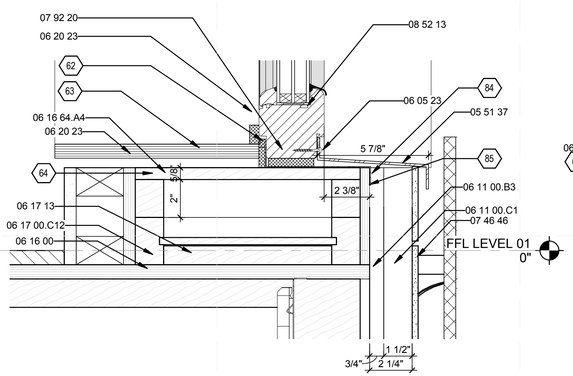

A1 TYP. COMBINED WINDOW FIXED FRAME AT FLOOR
3" = 1'-0"

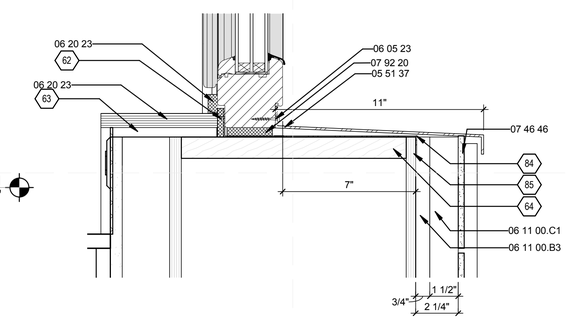

A3 TYP. COMBINED WINDOW FIXED LOWER FRAME
3" = 1'-0"

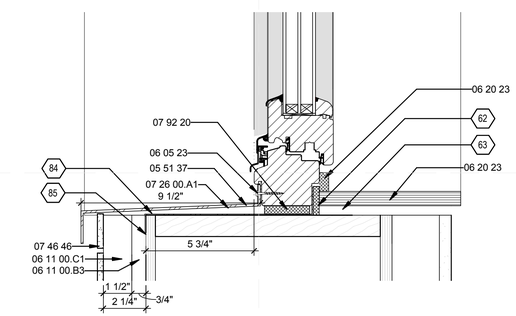

A5 TYP. TILT & TURN LOWER FRAME DETAIL
3" = 1'-0"

GENERAL SHEET NOTES

REFERENCE KEYNOTES

05 51 37	ALUMINUM SILL
06 05 23	WOOD, PLASTIC, AND COMPOSITE FASTENINGS
06 11 00.B3	1X3
06 11 00.C1	2X3
06 11 00.D1	2X4
06 16 00	SHEATHING
06 16 64.A4	5/8" ADVANTECH SHEATHING
06 17 00.C12	2 1/2" X 11 7/8" NORDIC I JOIST
06 17 13	LAMINATED VENEER LUMBER
06 17 43.A1	1 1/8" X 11 7/8" ADVANTECH RIM BOARD
06 20 23	INTERIOR FINISH CARPENTRY
07 26 00.A1	MOISTURE BARRIER
07 46 46	MINERAL-FIBER CEMENT SIDING
07 62 00.A2	ALUMINUM FLASHING
07 92 20	EXPANDING FOAM TAPE
08 52 13	METAL-CLAD WOOD WINDOWS

SHEET KEYNOTES

62	RIGID FOAM INSULATION FLUSH WITH FRAME
63	1/2" ROUGH OPENING CLEARANCE AROUND FRAME
64	ROUGH WINDOW SILL
65	SIMPSON FLAT PLATE W/20" SPACING
66	FIELD INSTALLED EXTERIOR WOOD EXTENSION
84	WINDOW SILL WATEPROOFING MEMBRAIN
85	WEATHR RESISTANT BARRIER

TEAM NAME: TEAM MASSACHUSETTS
ADDRESS: MASSART 621 HUNTINGTON AVE. BOSTON MA 02115
CONTACT: SPENCER CULHANE 602.677.6388 SPENCER.CULHANE@4DHOME.US WWW.4DHOME.US

CONSULTANTS

EPOCH HOMES

PASSIVE HOUSE INSTITUTE US

SLADEN FEINSTEIN INTEGRATED LIGHTING

LEMESSURIER CONSULTANTS, STRUCTURAL ENGINEERS

CLIENT

U.S. DEPARTMENT OF ENERGY

SOLAR DECATHLON 2011

WWW.SOLARDECATHLON.GOV

MARK	DATE	DESCRIPTION

LOT NUMBER:	NA
DRAWN BY:	FL
CHECKED BY:	PH
COPYRIGHT:	NONE: PROJECT IS PUBLIC DOMAIN

SHEET TITLE

WINDOW DETAILS

A-501

8/12/2011 8:43:43 PM

TEAM NAME:	TEAM MASSACHUSETTS
ADDRESS:	MASSART 621 HUNTINGTON AVE. BOSTON MA 02115
CONTACT:	SPENCER CULHANE 602.677.6388 SPENCER.CULHANE@4DHOME.US WWW.4DHOME.US

CONSULTANTS

EPOCH HOMES

PASSIVE HOUSE INSTITUTE US

SLADEN FEINSTEIN INTEGRATED LIGHTING

LEMESSURIER CONSULTANTS, STRUCTURAL ENGINEERS

CLIENT

U.S. DEPARTMENT OF ENERGY

SOLAR DECATHLON 2011

WWW.SOLARDECATHLON.GOV

MARK	DATE	DESCRIPTION

LOT NUMBER:	NA
DRAWN BY:	Author
CHECKED BY:	Checker
COPYRIGHT:	NONE: PROJECT IS PUBLIC DOMAIN

SHEET TITLE

ROOF DETAILS

A-532

8/12/2011 8:43:45 PM

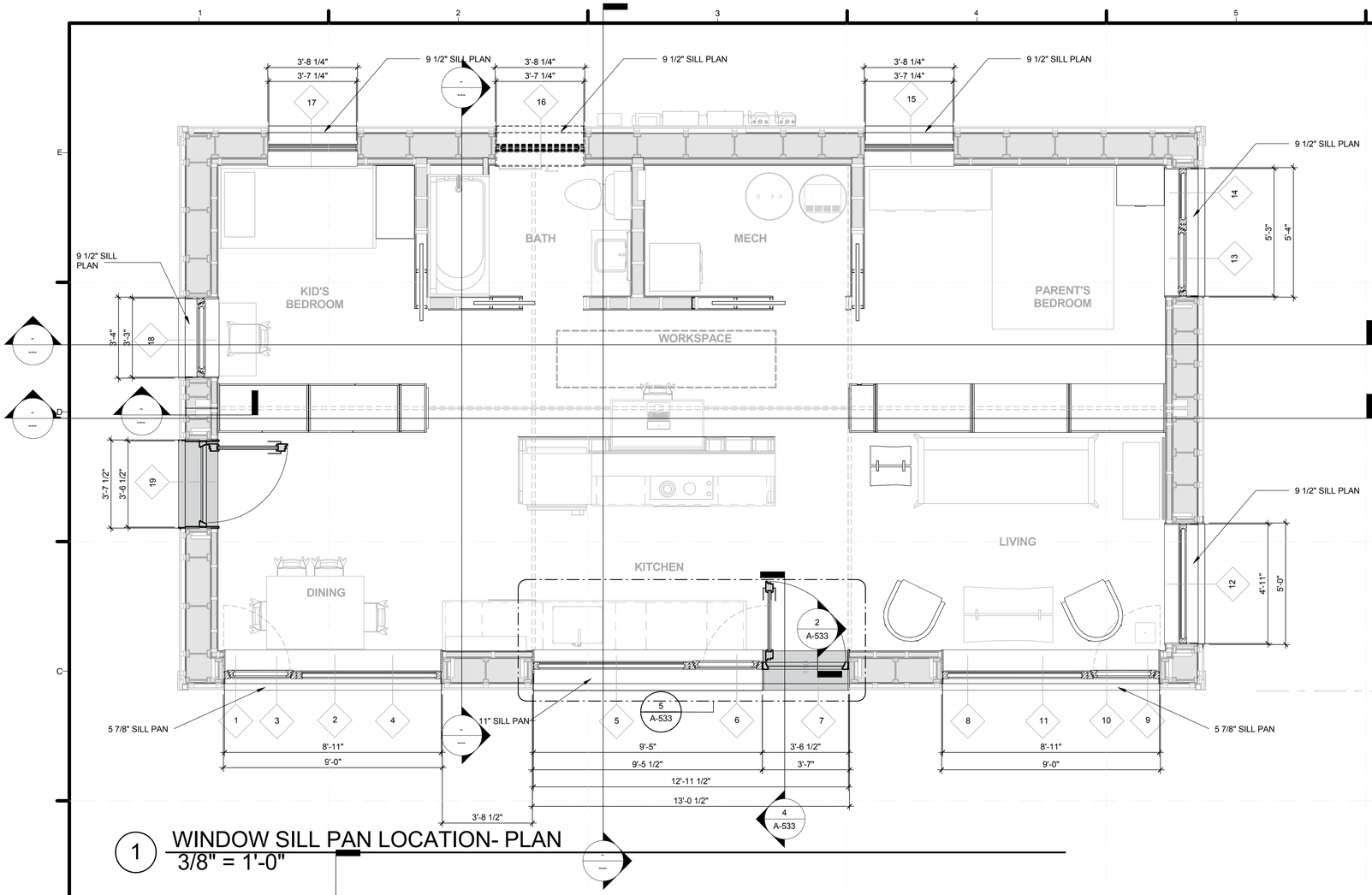

1 WINDOW SILL PAN LOCATION- PLAN
3/8" = 1'-0"

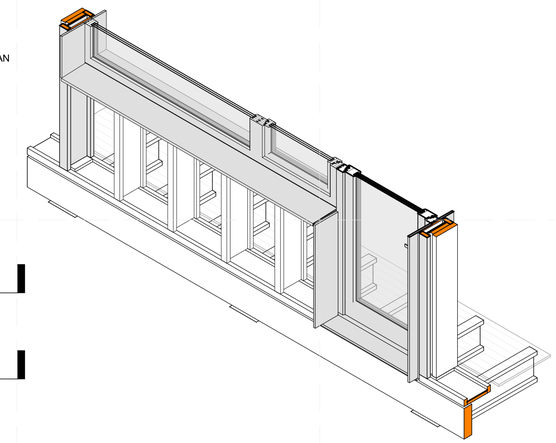

3 SOUTH WINDOW AND DOOR AXON

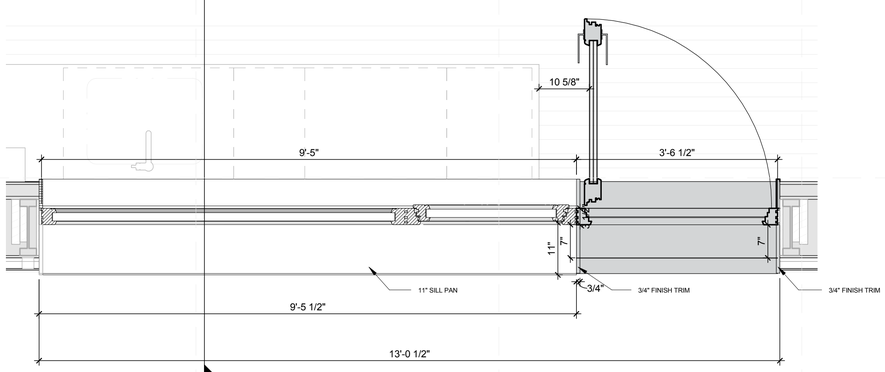

5 WINDOW AND DOOR SILL PAN LOCATION- PLAN
3/4" = 1'-0"

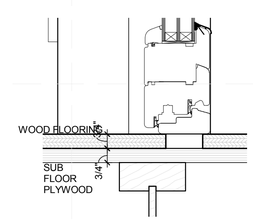

2 DOOR THRESHOLD DETAIL
3" = 1'-0"

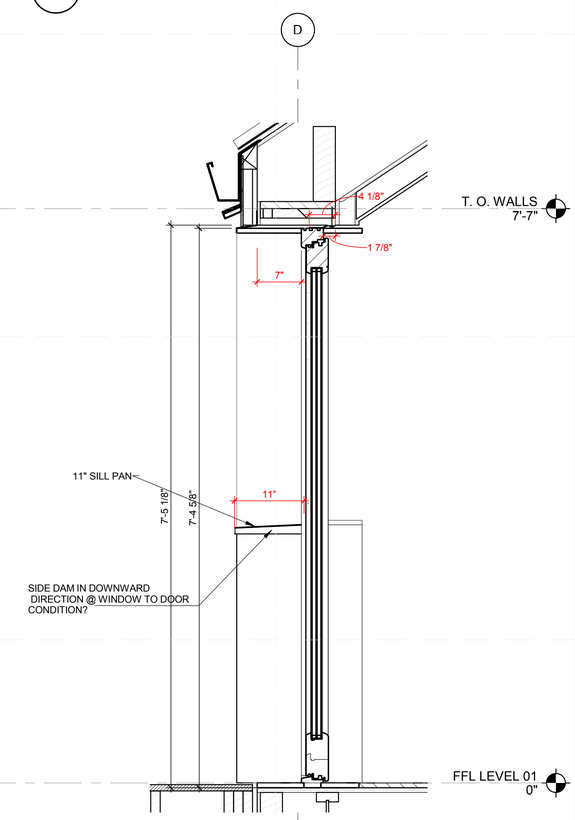

4 SOUTH DOOR SECTION
1" = 1'-0"

4D HOME

TEAM NAME:	TEAM MASSACHUSETTS
ADDRESS:	MASSART 621 HUNTINGTON AVE. BOSTON MA 02115
CONTACT:	SPENCER CULHANE 602.677.6388 SPENCER.CULHANE@4DHOME.US WWW.4DHOME.US

CONSULTANTS

EPOCH HOMES

PASSIVE HOUSE INSTITUTE US

SLADEN FEINSTEIN INTEGRATED LIGHTING

LEMESSURIER CONSULTANTS, STRUCTURAL ENGINEERS

CLIENT

U.S. DEPARTMENT OF ENERGY

SOLAR DECATHLON 2011

WWW.SOLARDECATHLON.GOV

U.S. DEPARTMENT OF ENERGY SOLAR DECATHLON

MARK	DATE	DESCRIPTION

LOT NUMBER:	NA
DRAWN BY:	Author
CHECKED BY:	Checker
COPYRIGHT:	NONE: PROJECT IS PUBLIC DOMAIN

SHEET TITLE

WINDOW SILLS

A-533

8/12/2011 8:43:55 PM

1 {3D - spencer_culhane}

8/12/2011 8:43:58 PM

TEAM NAME:	TEAM MASSACHUSETTS
ADDRESS:	MASSART 621 HUNTINGTON AVE. BOSTON MA 02115
CONTACT:	SPENCER CULHANE 602.677.6388 SPENCER.CULHANE@4DHOME.US WWW.4DHOME.US

CONSULTANTS

EPOCH HOMES

PASSIVE HOUSE INSTITUTE US

SLADEN FEINSTEIN INTEGRATED LIGHTING

LEMESSURIER CONSULTANTS, STRUCTURAL ENGINEERS

CLIENT

U.S. DEPARTMENT OF ENERGY

SOLAR DECATHLON 2011

WWW.SOLARDECATHLON.GOV

MARK	DATE	DESCRIPTION

LOT NUMBER:	NA
DRAWN BY:	Author
CHECKED BY:	Checker
COPYRIGHT:	NONE: PROJECT IS PUBLIC DOMAIN

SHEET TITLE

Unnamed

A-534

1 3D View 18

8/12/2011 8:44:41 PM

TEAM NAME:	TEAM MASSACHUSETTS
ADDRESS:	MASSART 621 HUNTINGTON AVE. BOSTON MA 02115
CONTACT:	SPENCER CULHANE 602.677.6388 SPENCER.CULHANE@4DHOME.US WWW.4DHOME.US

CONSULTANTS

EPOCH HOMES

PASSIVE HOUSE INSTITUTE US

SLADEN FEINSTEIN INTEGRATED LIGHTING

LEMESSURIER CONSULTANTS, STRUCTURAL ENGINEERS

CLIENT

U.S. DEPARTMENT OF ENERGY

SOLAR DECATHLON 2011

WWW.SOLARDECATHLON.GOV

MARK	DATE	DESCRIPTION

LOT NUMBER:	NA
DRAWN BY:	Author
CHECKED BY:	Checker
COPYRIGHT:	NONE: PROJECT IS PUBLIC DOMAIN

SHEET TITLE

Unnamed

A-535

DOOR SCHEDULE

MARK	DR TYPE	DR SIZE	DESCRIPTION	MANUFACTURER	MODEL	FRAME TYPE	FINISH			Count
							DOOR	FRAME	COMPONENTS	
101	95	EAS DOOR_West	WEST EXTERIOR DOOR	EUROPEAN ARCHITECTURAL SUPPLY	MAKROWIN 88G2	SWING	SAFETY GLASS	MAHOGANHY		1
102	96	36" x 80" A	SOLID CORE DOOR	JELD WEN	463620	POCKET	PAINTED	WOOD	JOHNSON POCKET DOOR HARDWARE	1
104	100	30" x 80" A	SOLID CORE DOOR	JELD WEN	605077	POCKET	PAINTED	WOOD	JOHNSON POCKET DOOR HARDWARE	1
105	101	36" x 80" MECH				POCKET	PAINTED	WOOD	JOHNSON POCKET DOOR HARDWARE	1
106	96	36" x 80" A	SOLID CORE DOOR	JELD WEN	463620	POCKET	PAINTED	WOOD	JOHNSON POCKET DOOR HARDWARE	1
110	94	EAS DOOR	SOUTH EXTERIOR DOOR	EUROPEAN ARCHITECTURAL SUPPLY	MAKROWIN 88G2	SWING	SAFETY GLASS	MAHOGANHY		1

ROOM FINISH SCHEDULE

ROOM NO	ROOM NAME	FINISH				Area	COMMENTS
		FLOOR	BASE	WALL	CEILING		
101	DINING	HARD WOOD	TRIM BOARD	GYPSUM	GYPSUM	122 SF	
102	KID'S BEDROOM	HARD WOOD	TRIM BOARD	GYPSUM	GYPSUM	81 SF	
103	WORKSPACE	HARD WOOD	TRIM BOARD	GYPSUM	GYPSUM	102 SF	
104	BATH	STONE TILE	TRIM BOARD	MOLD RESISTANT GYPSUM	MOLD RESISTANCE GYPSUM	45 SF	
105	MECH	HARD WOOD	TRIM BOARD	GYPSUM	GYPSUM	46 SF	
106	PARENT'S BEDROOM	HARD WOOD	TRIM BOARD	GYPSUM	GYPSUM	124 SF	
107	LIVING	HARD WOOD	TRIM BOARD	GYPSUM	GYPSUM	146 SF	
108	KITCHEN	HARD WOOD	N/A	GYPSUM	GYPSUM	84 SF	GLASS TILE BACKSPLASH

GENERAL SHEET NOTES

REFERENCE KEYNOTES

SHEET KEYNOTES

4D HOME

TEAM NAME: TEAM MASSACHUSETTS

ADDRESS: MASSART
621 HUNTINGTON AVE
BOSTON MA 02115

CONTACT: SPENCER CULHANE 602.677.6388
SPENCER.CULHANE@4DHOME.US
WWW.4DHOME.US

CONSULTANTS

EPOCH HOMES

PASSIVE HOUSE INSTITUTE US

SLADEN FEINSTEIN INTEGRATED LIGHTING

LEMESSURIER CONSULTANTS, STRUCTURAL ENGINEERS

CLIENT

U.S. DEPARTMENT OF ENERGY

SOLAR DECATHLON 2011

WWW.SOLARDECATHLON.GOV

U.S. DEPARTMENT OF ENERGY SOLAR DECATHLON

MARK	DATE	DESCRIPTION

LOT NUMBER: NA

DRAWN BY: SC_FL_EC

CHECKED BY: PH

COPYRIGHT: NONE: PROJECT IS PUBLIC DOMAIN

SHEET TITLE

SCHEDULES

A-601

8/12/2011 8:44:49 PM

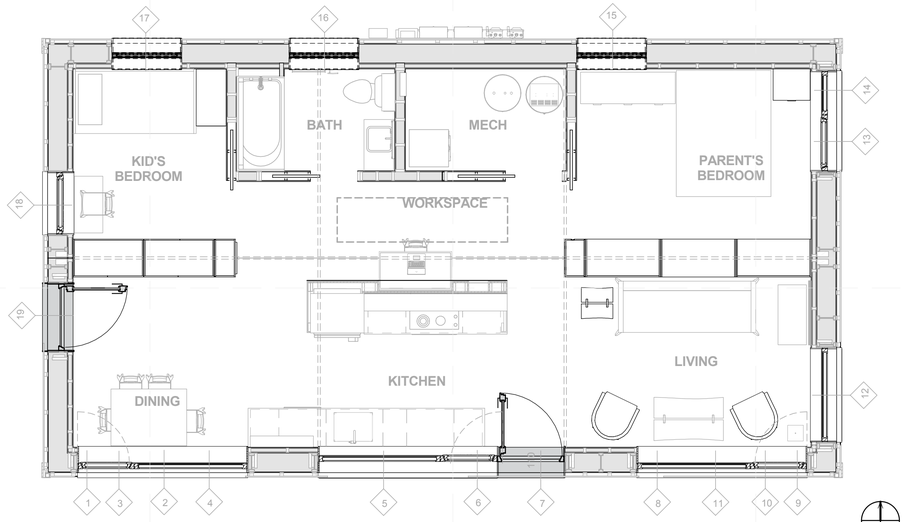

D1 WINDOWS- PLAN
1/4" = 1'-0"

0 2' 4' 8'

KEY NOTE	DESCRIPTION	QUANTITY	OPERATION	ROUGH OPENING WIDTH	ROUGH OPENING HEIGHT	WINDOW UNIT WIDTH	WINDOW UNIT HEIGHT	ORIENTATION	GLAZING SQFT.	SAFTEY GLAZING	TYPE	EXTERNAL BLINDS
1.00	DINING A	1.00	TILT-TURN	_	_	2'-11"	4'-11"	S	9.67	N	MAKROWIN 88G2	Y
2.00	DINING B	1.00	FIXED	_	_	5'-11"	4'-11"	S	25.43	N	MAKROWIN 88G2	Y
3.00	DINING C	1.00	FIXED	_	_	2'-11"	1'-11"	S	3.85	Y	MAKROWIN 88G2	Y
4.00	DINING D	1.00	FIXED	_	_	5'-11"	1'-11"	S	8.53	Y	MAKROWIN 88G2	Y
5.00	KITCHEN A	1.00	FIXED	_	_	6'-11"	3'-11"	S	22.03	N	MAKROWIN 88G2	Y
6.00	KITCHEN B	1.00	TILT-TURN	_	_	2'-11"	3'-11"	S	7.20	Y	MAKROWIN 88G2	Y
7.00	KITCHEN DOOR	1.00	TILT-TURN	3'-7"	3'-7"	3'-6 1/2"	7'-4 5/8"	S	20.62	Y	MAKROWIN 88G2	N
8.00	LIVING A	1.00	FIXED	_	_	5'-11"	4'-11"	S	25.43	N	MAKROWIN 88G2	Y
9.00	LIVING B	1.00	TILT-TURN	_	_	2'-11"	4'-11"	S	9.67	N	MAKROWIN 88G2	Y
10.00	LVING C	1.00	FIXED	_	_	2'-11"	1'-11"	S	3.85	N	MAKROWIN 88G2	Y
11.00	LIVING D	1.00	FIXED	_	_	5'-11"	1'-11"	S	8.53	N	MAKROWIN 88G2	Y
12.00	LIVING	1.00	FIXED	5'-0"	5'-0"	4'-11"	4'-11"	E	20.44	N	MAKROWIN 88G2	Y
13.00	BED 1 A	1.00	TILT-TURN	_	_	3'-3"	4'-11"	E	13.13	N	MAKROWIN 88G2	Y
14.00	BED 1 B	1.00	FIXED	_	_	1'-11"	4'-11"	E	5.29	N	MAKROWIN 88G2	Y
15.00	BED 1	1.00	FIXED	3'-9 1/4"	2'-0"	3'-8 1/4"	1'-11"	N	4.84	N	MAKROWIN 88G2	N
16.00	BATH	1.00	TILT-TURN	3'-9 1/4"	2'-0"	3'-8 1/4"	1'-11"	N	4.84	Y	MAKROWIN 88G2	N
17.00	BED 2	1.00	FIXED	3'-9 1/4"	2'-0"	3'-8 1/4"	1'-11"	N	4.84	N	MAKROWIN 88G2	N
18.00	BED 2	1.00	TILT-TURN	3'-4"	4'-0"	3'-3"	3'-11"	W	8.13	N	MAKROWIN 88G2	Y
19.00	DINING DOOR	1.00	TILT-TURN	3'-7"	7'-5 1/8"	3'-6 1/2"	7'-4 5/8"	W	20.62	Y	MAKROWIN 88G2	N
20.00	SKYLIGHT	1.00	TILT-TURN	1'-10 1/4"	2'-7 3/4"			N (ROOF)	4.52	N	ROTO-FRANK	N
(1-2-3-4)	DINING	1.00	TILT-TURN/FIXED	9'-0"	7'-0"	8'-11"	6'-11"	S	47.48	(SEE ABOVE)	MAKROWIN 88G2	Y
(8-9-10-11)	LIVING	1.00	TILT-TURN/FIXED	9'-0"	7'-0"	8'-11"	6'-11"	S	47.48	(SEE ABOVE)	MAKROWIN 88G2	Y
(5-6)	KITCHEN	1.00	TILT-TURN/FIXED	10'-0"	4'-0"	9'-5"	3'-11"	S	29.23	(SEE ABOVE)	MAKROWIN 88G2	Y
(13-14)	BED 1	1.00	TILT-TURN/FIXED	5'-4"	5'-0"	5'-3"	4'-11"	E	18.42	(SEE ABOVE)	MAKROWIN 88G2	Y

20
4.06Glazing Sqft.

B1 NORTH WINDOWS
1/4" = 1'-0"

0 2' 4' 8'

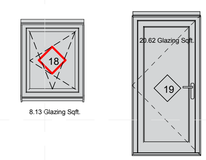

B5 WEST WINDOWS
1/4" = 1'-0"

0 2' 4' 8'

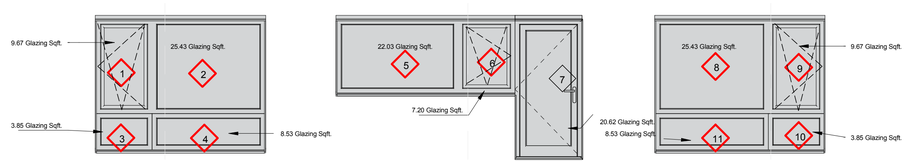

A1 SOUTH WINDOWS
1/4" = 1'-0"

0 2' 4' 8'

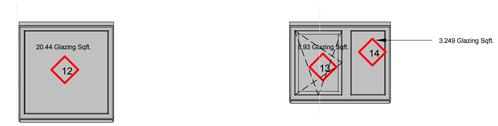

A5 EAST WINDOWS
1/4" = 1'-0"

0 2' 4' 8'

8/12/2011 8:45:00 PM

4D HOME

TEAM NAME:	TEAM MASSACHUSETTS
ADDRESS:	MASSART 621 HUNTINGTON AVE. BOSTON MA 02115
CONTACT:	SPENCER CULHANE 602.677.6388 SPENCER.CULHANE@4DHOME.US WWW.4DHOME.US

CONSULTANTS

EPOCH HOMES

PASSIVE HOUSE INSTITUTE US

SLADEN FEINSTEIN INTEGRATED LIGHTING

LEMESSURIER CONSULTANTS, STRUCTURAL ENGINEERS

CLIENT

U.S. DEPARTMENT OF ENERGY

SOLAR DECATHLON 2011

WWW.SOLARDECATHLON.GOV

U.S. DEPARTMENT OF ENERGY SOLAR DECATHLON

MARK	DATE	DESCRIPTION

LOT NUMBER:	NA
DRAWN BY:	SC_FL
CHECKED BY:	PH
COPYRIGHT:	NONE: PROJECT IS PUBLIC DOMAIN

SHEET TITLE

WINDOW SCHEDULE

A-602

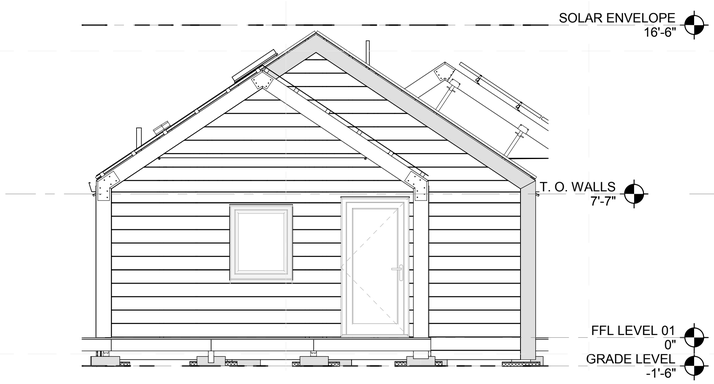

C1 ELEVATION WEST SIDING
1/4" = 1'-0"

0 2' 4' 8'

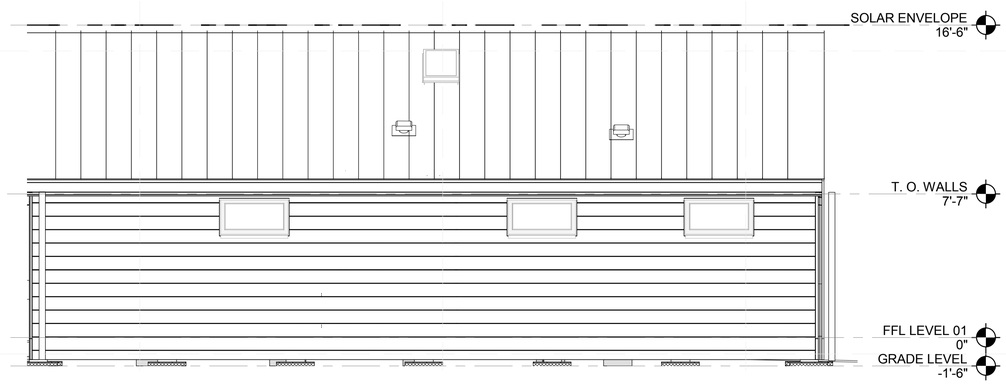

C3 ELEVATION NORTH SIDING
1/4" = 1'-0"

0 2' 4' 8'

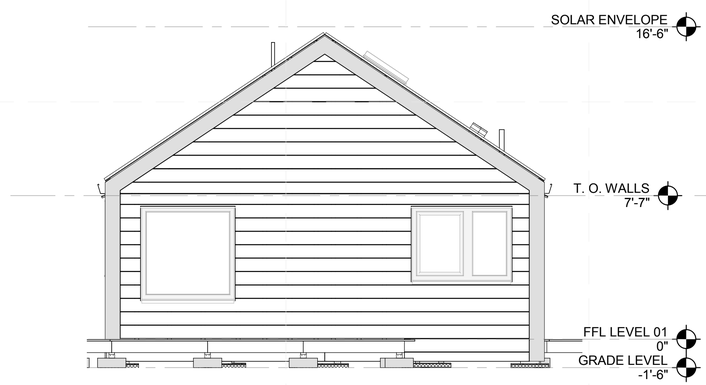

A1 ELEVATION EAST SIDING
1/4" = 1'-0"

0 2' 4' 8'

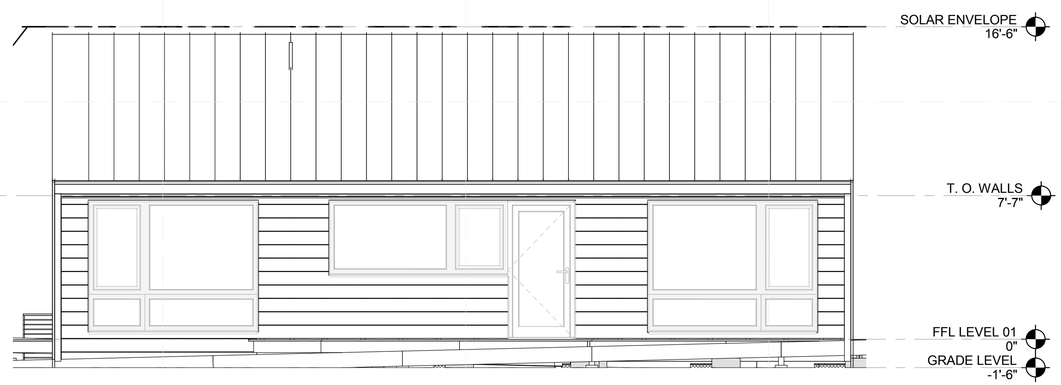

A3 ELEVATION SOUTH SIDING
1/4" = 1'-0"

0 2' 4' 8'

GENERAL SHEET NOTES

REFERENCE KEYNOTES

SHEET KEYNOTES

4D HOME

TEAM NAME: TEAM MASSACHUSETTS
ADDRESS: MASSART 621 HUNTINGTON AVE. BOSTON MA 02115
CONTACT: SPENCER CULHANE 602.677.6388 SPENCER.CULHANE@4DHOME.US WWW.4DHOME.US

CONSULTANTS

EPOCH HOMES
PASSIVE HOUSE INSTITUTE US
SLADEN FEINSTEIN INTEGRATED LIGHTING
LEMESSURIER CONSULTANTS, STRUCTURAL ENGINEERS

CLIENT

U.S. DEPARTMENT OF ENERGY
SOLAR DECATHLON 2011
WWW.SOLARDECATHLON.GOV

U.S. DEPARTMENT OF ENERGY SOLAR DECATHLON

MARK	DATE	DESCRIPTION

LOT NUMBER:	NA
DRAWN BY:	FL
CHECKED BY:	PH
COPYRIGHT:	NONE: PROJECT IS PUBLIC DOMAIN

SHEET TITLE

SIDING DESIGN

A-604

8/12/2011 8:45:13 PM

TEAM NAME:	TEAM MASSACHUSETTS
ADDRESS:	MASSART 621 HUNTINGTON AVE. BOSTON MA 02115
CONTACT:	SPENCER CULHANE 602.677.6388 SPENCER.CULHANE@4DHOME.US WWW.4DHOME.US

CONSULTANTS

EPOCH HOMES

PASSIVE HOUSE INSTITUTE US

SLADEN FEINSTEIN INTEGRATED LIGHTING

LEMESSURIER CONSULTANTS, STRUCTURAL ENGINEERS

CLIENT

U.S. DEPARTMENT OF ENERGY

SOLAR DECATHLON 2011

WWW.SOLARDECATHLON.GOV

MARK	DATE	DESCRIPTION

LOT NUMBER:	NA
DRAWN BY:	Author
CHECKED BY:	Checker
COPYRIGHT:	NONE: PROJECT IS PUBLIC DOMAIN

SHEET TITLE

FOOTING SHOP DRAWINGS

A-605

8/12/2011 8:45:15 PM

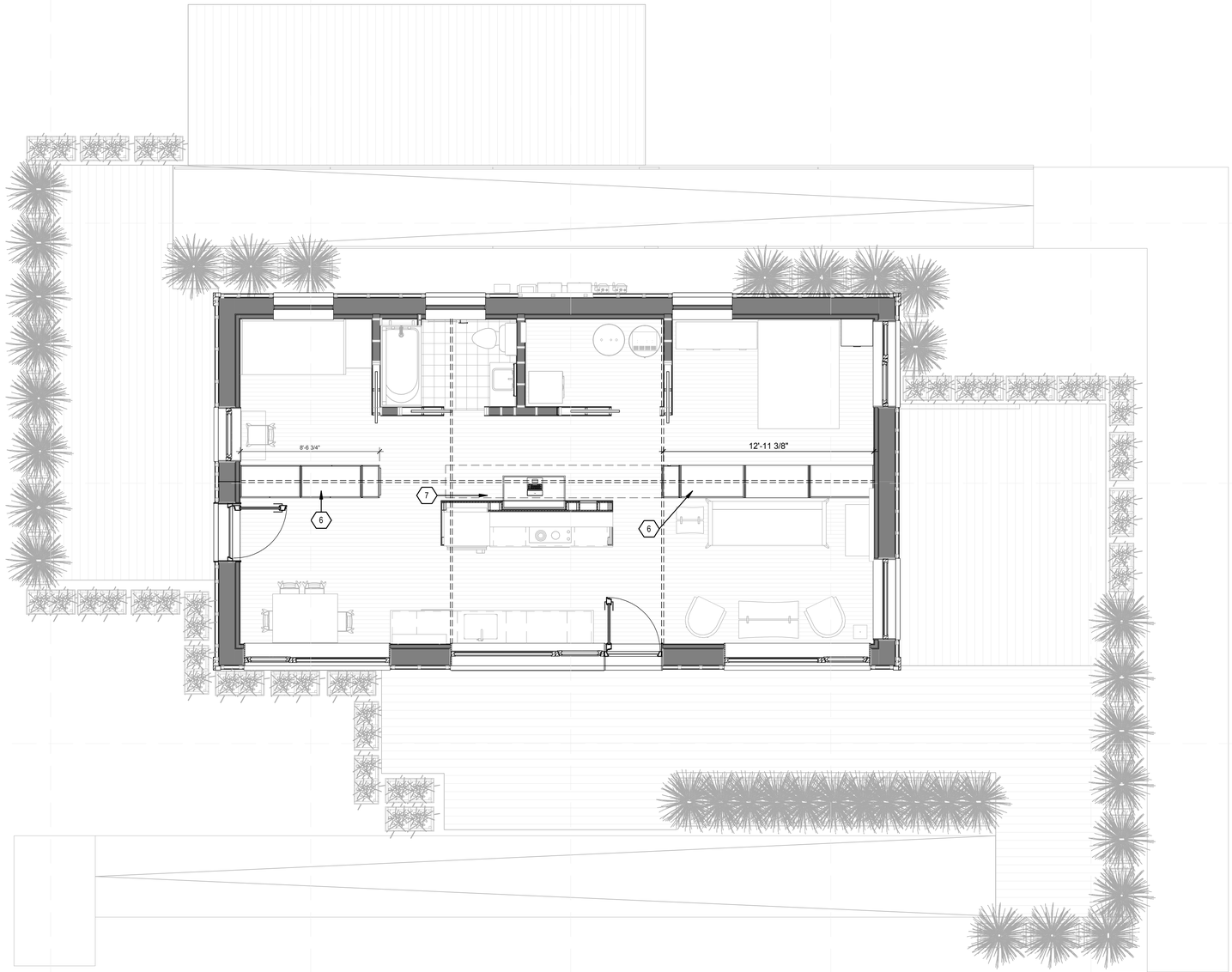

A1 MOVABLE WALL DIAGRAM
1/4" = 1'-0"

0 2' 4' 8'

GENERAL SHEET NOTES

REFERENCE KEYNOTES

SHEET KEYNOTES

6	MOVABLE WALL IN PRIMARY POSITION
7	MOVABLE WALL IN OPEN POSITION

4D HOME

TEAM NAME:	TEAM MASSACHUSETTS
ADDRESS:	MASSART 621 HUNTINGTON AVE. BOSTON MA 02115
CONTACT:	SPENCER CULHANE 602.677.6388 SPENCER.CULHANE@4DHOME.US WWW.4DHOME.US

CONSULTANTS

EPOCH HOMES

PASSIVE HOUSE INSTITUTE US

SLADEN FEINSTEIN INTEGRATED LIGHTING

LEMESSURIER CONSULTANTS, STRUCTURAL ENGINEERS

CLIENT

U.S. DEPARTMENT OF ENERGY

SOLAR DECATHLON 2011

WWW.SOLARDECATHLON.GOV

U.S. DEPARTMENT OF ENERGY SOLAR DECATHLON

MARK	DATE	DESCRIPTION

LOT NUMBER:	NA
DRAWN BY:	EC
CHECKED BY:	PH
COPYRIGHT:	NONE: PROJECT IS PUBLIC DOMAIN

SHEET TITLE

MOVEABLE COMPONENT DIAGRAM

A-801

8/12/2011 8:45:52 PM

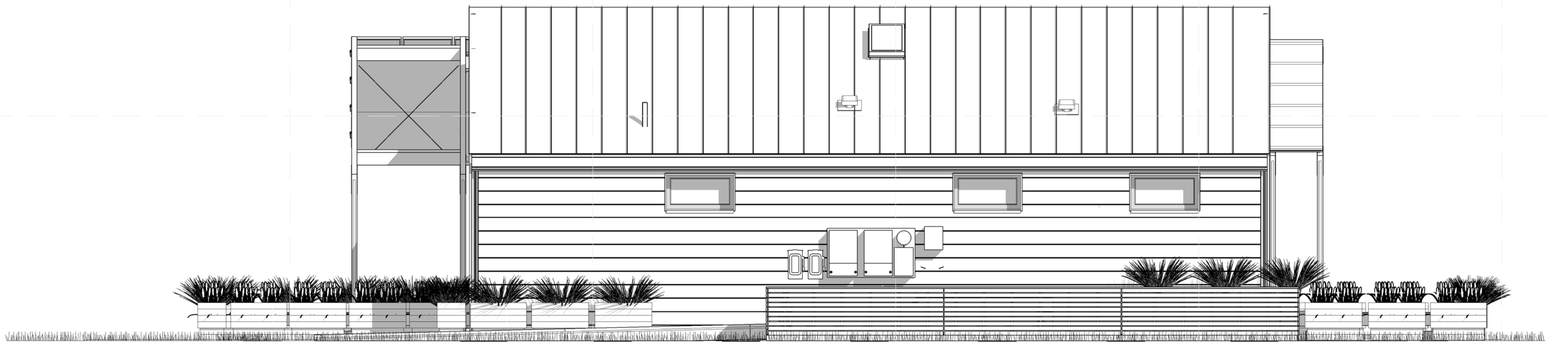

1 NORTH ELEVATION
1/4" = 1'-0"

0 2' 4' 8'

2 EAST ELEVATION
1/4" = 1'-0"

0 2' 4' 8'

TEAM NAME:	TEAM MASSACHUSETTS
ADDRESS:	MASSART 621 HUNTINGTON AVE BOSTON MA 02115
CONTACT:	SPENCER CULHANE 602.677.6388 SPENCER.CULHANE@4DHOME.US WWW.4DHOME.US

CONSULTANTS

EPOCH HOMES

PASSIVE HOUSE INSTITUTE US

SLADEN FEINSTEIN INTEGRATED LIGHTING

LEMESSURIER CONSULTANTS, STRUCTURAL ENGINEERS

CLIENT

U.S. DEPARTMENT OF ENERGY

SOLAR DECATHLON 2011

WWW.SOLARDECATHLON.GOV

MARK	DATE	DESCRIPTION

LOT NUMBER:	NA
DRAWN BY:	SC_FL_EC
CHECKED BY:	PH
COPYRIGHT:	NONE: PROJECT IS PUBLIC DOMAIN

SHEET TITLE

PRESENTATION ELEVATIONS

A-911

8/12/2011 8:46:33 PM

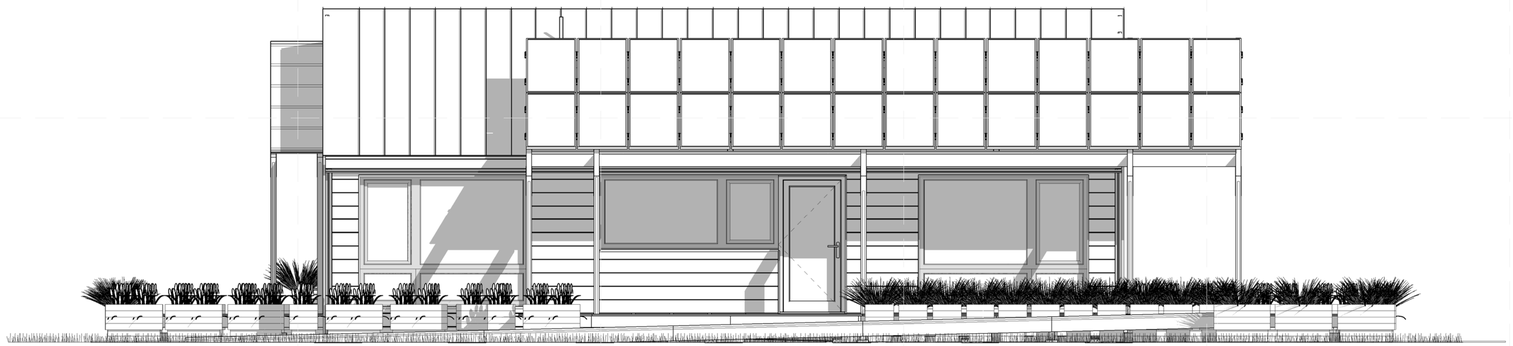

1 SOUTH ELEVATION
1/4" = 1'-0"

0 2' 4' 8'

2 WEST ELEVATION
1/4" = 1'-0"

0 2' 4' 8'

TEAM NAME:	TEAM MASSACHUSETTS
ADDRESS:	MASSART 621 HUNTINGTON AVE BOSTON MA 02115
CONTACT:	SPENCER CULHANE 602.677.6388 SPENCER.CULHANE@4DHOME.US WWW.4DHOME.US

CONSULTANTS

EPOCH HOMES

PASSIVE HOUSE INSTITUTE US

SLADEN FEINSTEIN INTEGRATED LIGHTING

LEMESSURIER CONSULTANTS, STRUCTURAL ENGINEERS

CLIENT

U.S. DEPARTMENT OF ENERGY

SOLAR DECATHLON 2011

WWW.SOLARDECATHLON.GOV

MARK	DATE	DESCRIPTION

LOT NUMBER:	NA
DRAWN BY:	EC
CHECKED BY:	Checker
COPYRIGHT:	NONE: PROJECT IS PUBLIC DOMAIN

SHEET TITLE

PRESENTATION ELEVATIONS

A-912

8/12/2011 8:47:08 PM

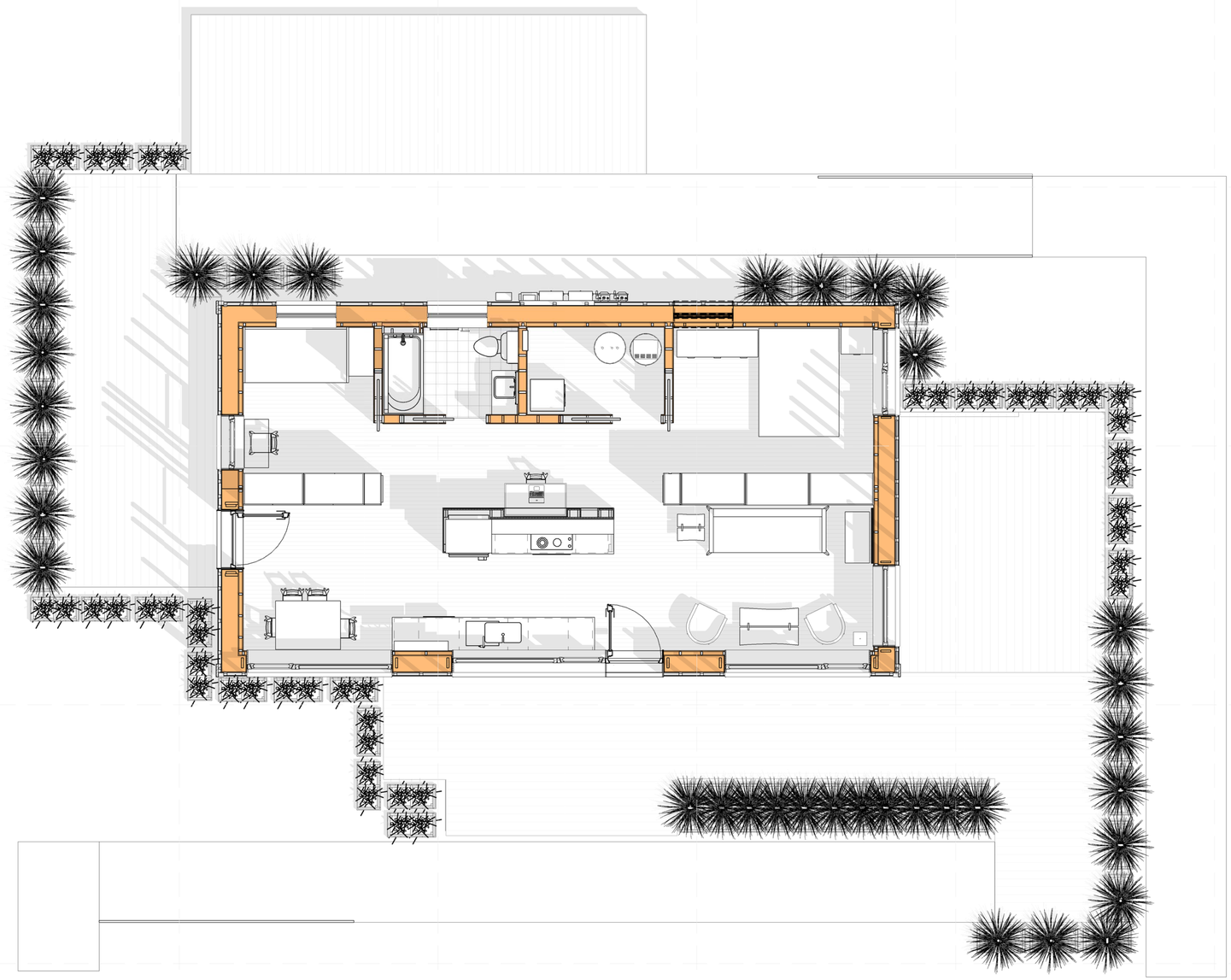

1 FLOOR PLAN
1/4" = 1'-0"

0 2' 4' 8'

8/12/2011 8:47:23 PM

4D HOME

TEAM NAME:	TEAM MASSACHUSETTS
ADDRESS:	MASSART 621 HUNTINGTON AVE BOSTON MA 02115
CONTACT:	SPENCER CULHANE 602.677.6388 SPENCER.CULHANE@4DHOME.US WWW.4DHOME.US

CONSULTANTS

EPOCH HOMES

PASSIVE HOUSE INSTITUTE US

SLADEN FEINSTEIN INTEGRATED LIGHTING

LEMESSURIER CONSULTANTS, STRUCTURAL ENGINEERS

CLIENT

U.S. DEPARTMENT OF ENERGY

SOLAR DECATHLON 2011

WWW.SOLARDECATHLON.GOV

U.S. DEPARTMENT OF ENERGY SOLAR DECATHLON

MARK	DATE	DESCRIPTION

LOT NUMBER:	NA
DRAWN BY:	EC
CHECKED BY:	Checker
COPYRIGHT:	NONE: PROJECT IS PUBLIC DOMAIN

SHEET TITLE

PRESENTATION FLOOR PLAN

A-913

THE PRIMARY MATERIALS USED IN THE HOUSE ARE WOOD, ALONG WITH METAL DETAILING IN THE HARDWARE. THESE MATERIALS REMAIN AFFORDABLE, ADEQUATE FOR THE REGIONAL WEATHER, AND PROPERLY ADDRESS THE NEW ENGLAND STYLE.

SINCE THE SQUARE FOOTAGE OF THE HOUSE IS LIMITED, STORAGE WALLS ARE DESIGNED INSTEAD OF TYPICAL PARTITION WALLS, REDUCING POTENTIAL CLUTTER WHILE PROVIDING ESSENTIAL STORAGE. THE FURNITURE IS LIGHT WEIGHT AND EASILY RECONFIGURABLE TO PROVIDE ADDITIONAL ADAPTABILITY. THE OPEN FLOOR PLAN FLEXIBILITY ALSO ALLOWS THE USER TO OPEN UP THE SPACE DURING SPECIAL OCCASIONS, SUCH AS HOLIDAYS AND OTHER SOCIAL GATHERINGS.

THE EXTERIOR OF THE HOUSE TIES INTO THE INTERIOR DESIGN AS WELL. TRUSSES, WHICH MATCH THE EXTERIOR TRELLIS, NOT ONLY SERVE AS A STRUCTURAL COMPONENT, BUT SUPPORTS THE ACRYLIC PANELS THAT ENCLOSE THE BEDROOMS AND PROVIDE THE TRACKS FOR THE DYNAMIC WALLS. THE TRANSLUCENCY OF THE ACRYLIC PARTITION OPENS UP THE SPACE BY ALLOWING LIGHT TO PASS THROUGH AND PROVIDING A VIEW OF THE GABLED ROOF.

THE WHOLE SYSTEM OF THE INTERIOR DESIGN OF THE 4D HOME, INCLUDING THE FLOOR PLAN, FURNITURE, AND THE STRUCTURAL COMPONENTS, ARE INTRICATELY INTERWOVE TO MAXIMIZE THE USE SPACE. THE INTERIOR EXTRACTS KEY ELEMENTS OF THE DESIGN OF THE 4D HOME, CREATING A HOUSE THAT WILL LIVE AND GROW WITH THE FAMILY.

INTERIOR
SOLAR DECATHLON
CONSTRUCTION DOCUMENTS

GENERAL INTERIOR NOTES

1. REFER TO DESIGN DRAWINGS, DETAILS, SPECIFICATIONS, AND STANDARDS.
2. DO NOT SCALE OR REPLICATE/REINTERPRET DRAWINGS. IN CASE OF QUESTION, CONSULT ARCHITECT.
3. APPLY ALL MATERIALS AND FINISHES ACCORDING TO DESIGN SPECIFICATIONS AND MANUFACTURER'S GUIDELINES
4. ALL EXPOSED PIPING, DUCTS, ELECTRICAL CONDUITS, ETC. ARE TO BE PAINTED/ FINISHED ACCORDING TO DESIGN SPECIFICATIONS WITHOUT COMPROMISING THE QUALITY OR FUNCTION OF THE UTILITY OR ITS INSULATING/ISOLATING ELEMENTS.
5. ALL RATINGS ARE TO COMPLY WITH UNDERWRITERS LABORATORIES TEST RATINGS (UL RATING).
6. UNLESS OTHERWISE NOTED, ALL DIMENSIONS ARE TO FINISHED FACE OF OBJECT.
7. ALL INTERIOR FIXTURES AND DECORATIONS ARE NOT TO PENETRATE BEYOND CHASEWALL, OR INTERIOR SIDE OF INSULATION/VAPOR BARRIER UNLESS OTHERWISE SPECIFIED.
8. DETAILS NOT SHOWN ARE SIMILAR IN CHARACTER AND DESIGN TO THOSE DETAILED.
9. DISSIMILAR METALS ARE TO BE ISOLATED FROM EACH OTHER WITH A PROPER MATERIAL TO PREVENT CHEMICAL REACTION/BREAKDOWN.
10. COORDINATE ALL CABINETRY/FURNITURE/FINISHER WITH MECHANICAL, ELECTRICAL, AND PLUMBING WORK.
11. ALL GLAZING IS TO BE CERTIFIED SAFETY GLASS, WITH CERTIFICATION THAT EACH PRODUCT CONFORMS TO APPLICABLE CONSUMER SAFETY PRODUCT STANDARDS.
12. WHERE DISCREPANCIES EXIST BETWEEN DRAWINGS AND CONSTRUCTION TRADE PRACTICES, CONSULT ARCHITECT BEFORE PROCEEDING WITH WORK.
13. UNLESS OTHERWISE NOTED, SHELVING IS DIMENSIONS FROM TOP FACE.

TEAM NAME: TEAM MASSACHUSETTS

ADDRESS: MASSART
621 HUNTINGTON AVE.
BOSTON MA 02115

CONTACT: SPENCER CULHANE 602.677.6388
SPENCER.CULHANE@4DHOME.US
WWW.4DHOME.US

CONSULTANTS

EPOCH HOMES

PASSIVE HOUSE INSTITUTE US

SLADEN FEINSTEIN INTEGRATED LIGHTING

LEMESSURIER CONSULTANTS, STRUCTURAL ENGINEERS

CLIENT

U.S. DEPARTMENT OF ENERGY

SOLAR DECATHLON 2011

WWW.SOLARDECATHLON.GOV

MARK	DATE	DESCRIPTION

LOT NUMBER:	NA
DRAWN BY:	SC_FL_EC
CHECKED BY:	PH
COPYRIGHT:	NONE: PROJECT IS PUBLIC DOMAIN

SHEET TITLE

INTERIOR SYMBOLS AND NOTES

I-001

8/12/2011 8:55:49 PM

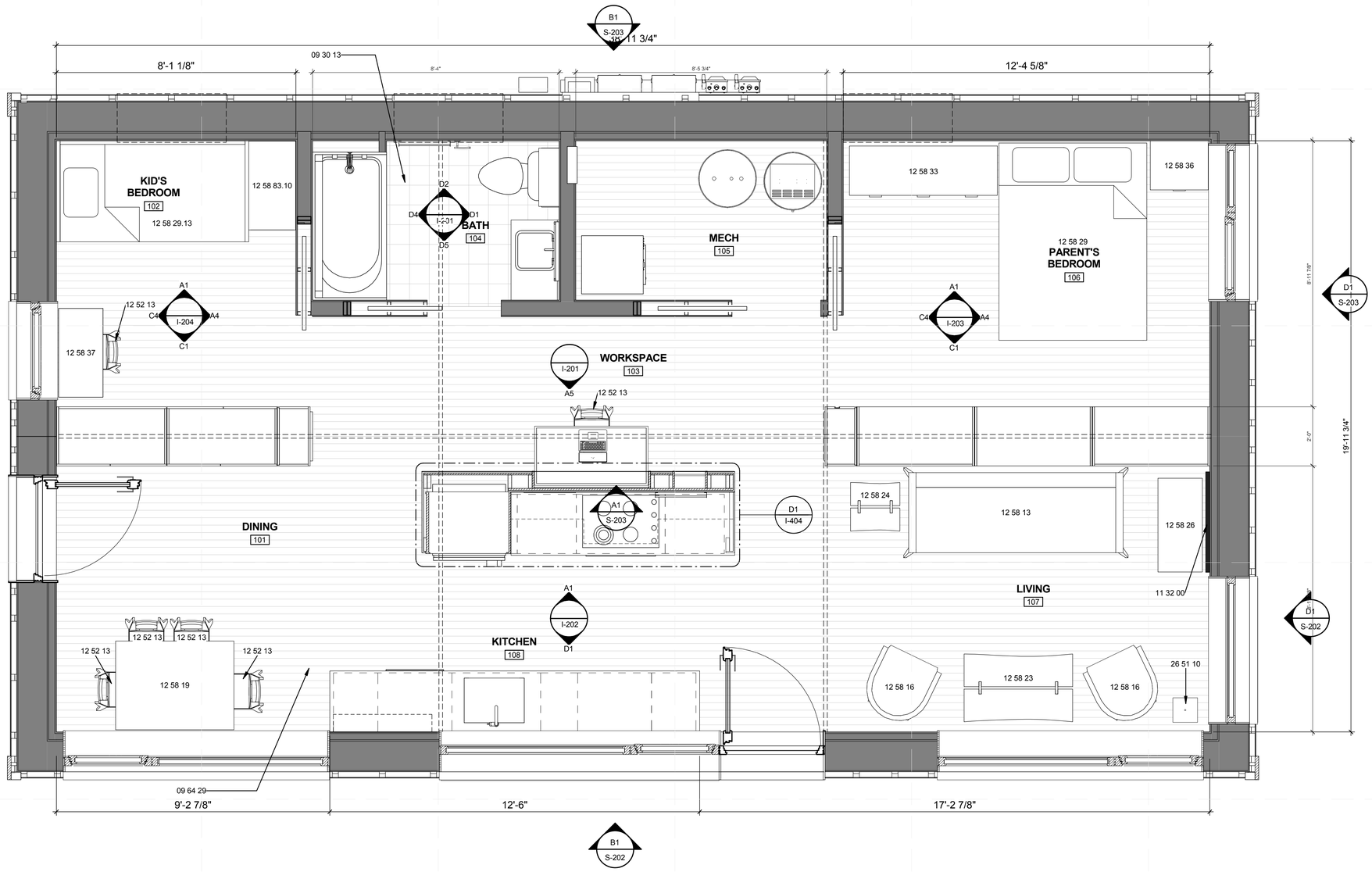

A1 INTERIOR DESIGN PLAN
1/2" = 1'-0"

0 1' 2' 4'

GENERAL SHEET NOTES

1. UNLESS OTHERWISE NOTED, PARTITIONS ARE DIMENSIONED FROM THE FINISHED FACE.
2. ALL MILLWORK DIMENSIONS TO BE SITE VERIFIED BY SUBCONTRACTOR
3. VERIFY ALL DIMENSIONS IN FIELD PRIOR TO FABRICATION AND INSTALLATION

REFERENCE KEYNOTES

09 30 13	CERAMIC TILING
09 64 29	WOOD STRIP AND PLANK FLOORING
11 32 00	TELEVISION
12 52 13	CHAIRS
12 58 13	COUCHES AND LOVESEATS
12 58 16	RESIDENTIAL CHAIRS
12 58 19	DINING TABLES AND CHAIRS
12 58 23	COFFEE TABLES
12 58 24	SIDE TABLE
12 58 26	ENTERTAINMENT CENTERS
12 58 29	BEDS
12 58 29.13	DAYBEDS
12 58 33	DRESSERS
12 58 36	NIGHTSTANDS
12 58 37	DESK
12 58 83.10	CUSTOM BUILT PULLOUT CLOSET
26 51 10	FLOOR LAMP

SHEET KEYNOTES

4D HOME

TEAM NAME:	TEAM MASSACHUSETTS
ADDRESS:	MASSART 621 HUNTINGTON AVE. BOSTON MA 02115
CONTACT:	SPENCER CULHANE 602.677.6388 SPENCER.CULHANE@4DHOME.US WWW.4DHOME.US

CONSULTANTS

EPOCH HOMES

PASSIVE HOUSE INSTITUTE US

SLADEN FEINSTEIN INTEGRATED LIGHTING

LEMESSURIER CONSULTANTS, STRUCTURAL ENGINEERS

CLIENT

U.S. DEPARTMENT OF ENERGY
SOLAR DECATHLON 2011
WWW.SOLARDECATHLON.GOV

U.S. DEPARTMENT OF ENERGY SOLAR DECATHLON

MARK	DATE	DESCRIPTION

LOT NUMBER:	NA
DRAWN BY:	EC
CHECKED BY:	PH
COPYRIGHT:	NONE: PROJECT IS PUBLIC DOMAIN

SHEET TITLE

INTERIOR DESIGN PLAN

I-101

8/12/2011 8:55:56 PM

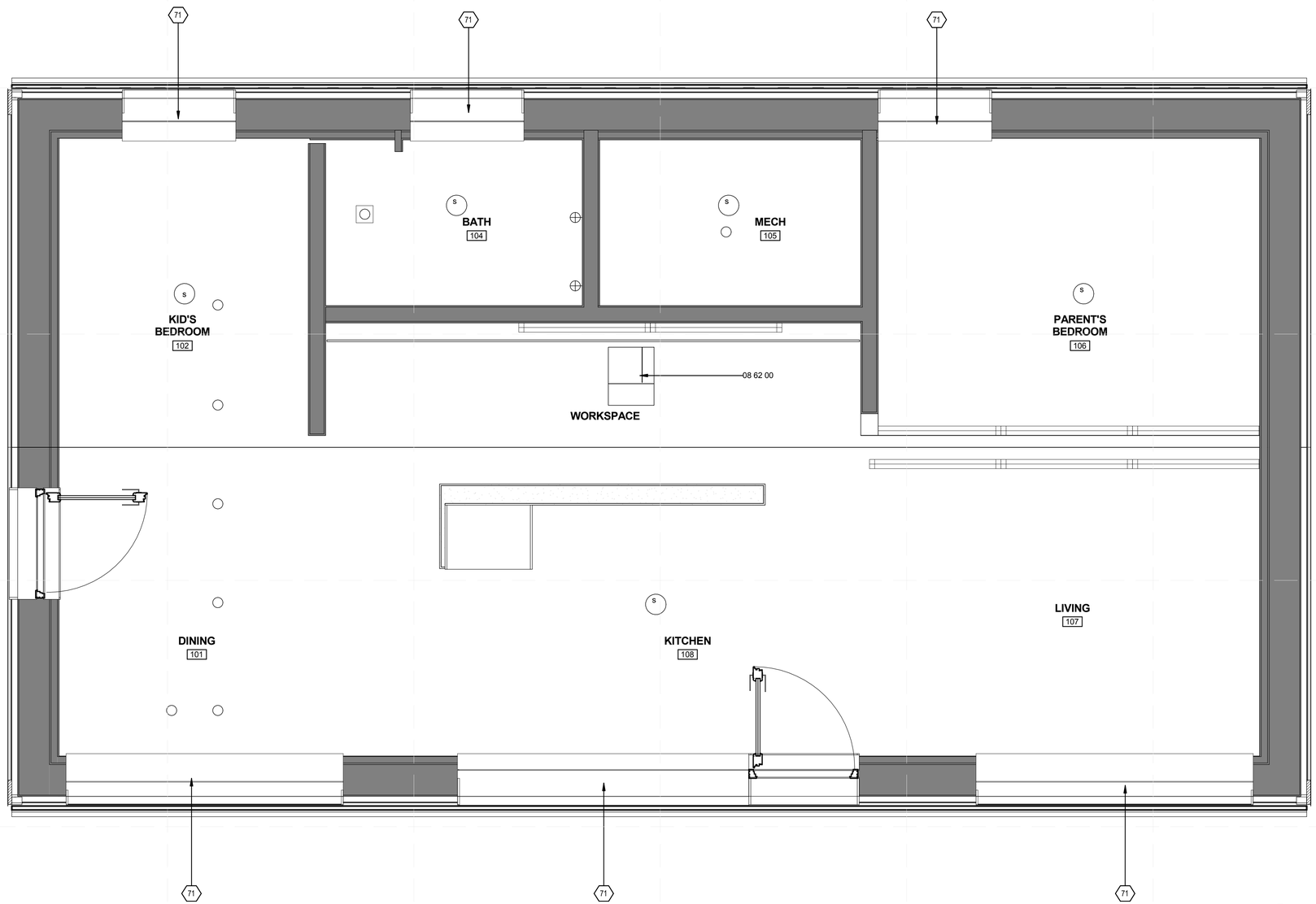

A1 REFLECTED CEILING PLAN
1/2" = 1'-0"

0 1' 2' 4'

GENERAL SHEET NOTES

1. THE CEILING FINISH SHALL BE 5/8" GYPSUM BOARD WITH TWO COATS OF PAINT.

REFERENCE KEYNOTES

08 62 00	UNIT SKYLIGHTS

SHEET KEYNOTES

71	UPPER WINDOW SILL

4D HOME

TEAM NAME: TEAM MASSACHUSETTS
ADDRESS: MASSART 621 HUNTINGTON AVE. BOSTON MA 02115
CONTACT: SPENCER CULHANE 602.677.6388 SPENCER.CULHANE@4DHOME.US WWW.4DHOME.US

CONSULTANTS

EPOCH HOMES
PASSIVE HOUSE INSTITUTE US
SLADEN FEINSTEIN INTEGRATED LIGHTING
LEMESSURIER CONSULTANTS, STRUCTURAL ENGINEERS

CLIENT

U.S. DEPARTMENT OF ENERGY
SOLAR DECATHLON 2011
WWW.SOLARDECATHLON.GOV

U.S. DEPARTMENT OF ENERGY SOLAR DECATHLON

MARK	DATE	DESCRIPTION

LOT NUMBER:	NA
DRAWN BY:	EC
CHECKED BY:	PH
COPYRIGHT:	NONE: PROJECT IS PUBLIC DOMAIN

SHEET TITLE

INTERIOR DESIGN REFLECTED CEILING PLAN

I-103

8/12/2011 8:56:02 PM

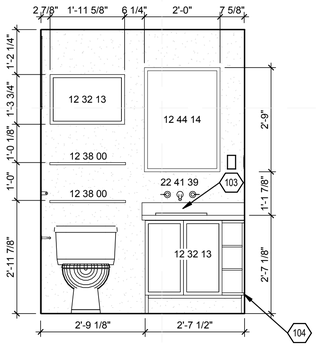

D1 EAST INTERIOR ELEVATION BATHROOM
1/2" = 1'-0"

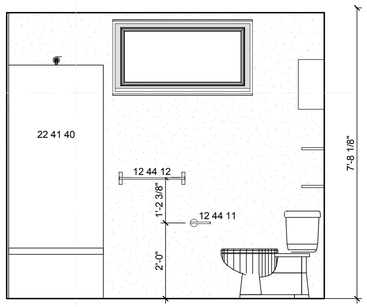

D2 NORTH INTERIOR ELEVATION BATHROOM
1/2" = 1'-0"

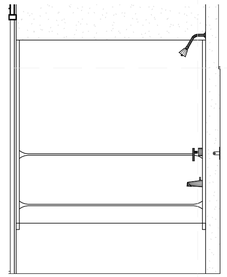

D4 WEST INTERIOR ELEVATION BATHROOM
1/2" = 1'-0"

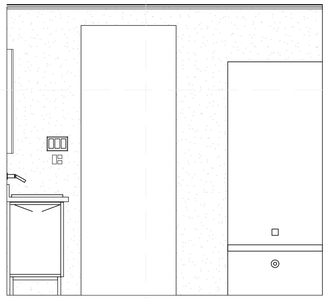

D5 SOUTH INTERIOR ELEVATION BATHROOM
1/2" = 1'-0"

A1 NORTH INTERIOR ELEVATION WORK SPACE
1/2" = 1'-0"

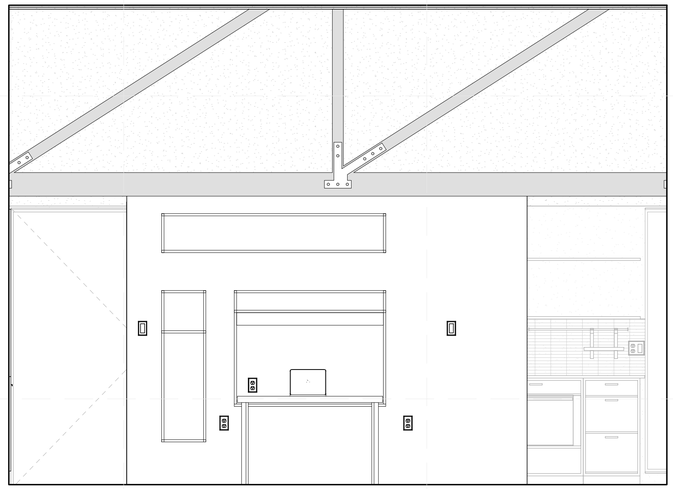

A5 SOUTH INTERIOR ELEVATION WORK SPACE
1/2" = 1'-0"

GENERAL SHEET NOTES

REFERENCE KEYNOTES

12 32 13	MANUFACTURED WOOD-VENEER-FACED CASEWORK
12 38 00	OPEN SHELVING
12 44 11	TOILET PAPER HOLDER
12 44 12	TOWEL BAR
12 44 14	MIRROR
22 41 39	RESIDENTIAL FAUCETS, SUPPLIES AND TRIM
22 41 40	TUB/SHOWER FIXTURE

SHEET KEYNOTES

103	ALIGN CENTER LINE OF SINK AND FAUCET WITH CENTER LINE OF CABINET DOORS
104	ALIGN CABINET WITH FINISH FACE OF WALL

TEAM NAME: TEAM MASSACHUSETTS
ADDRESS: MASSART 621 HUNTINGTON AVE. BOSTON MA 02115
CONTACT: SPENCER CULHANE 602.677.6388 SPENCER.CULHANE@4DHOME.US WWW.4DHOME.US

CONSULTANTS

EPOCH HOMES

PASSIVE HOUSE INSTITUTE US

SLADEN FEINSTEIN INTEGRATED LIGHTING

LEMESSURIER CONSULTANTS, STRUCTURAL ENGINEERS

CLIENT

U.S. DEPARTMENT OF ENERGY

SOLAR DECATHLON 2011

WWW.SOLARDECATHLON.GOV

MARK	DATE	DESCRIPTION

LOT NUMBER:	NA
DRAWN BY:	EC
CHECKED BY:	PH
COPYRIGHT:	NONE: PROJECT IS PUBLIC DOMAIN

SHEET TITLE

INTERIOR DESIGN ELEVATION

I-201

8/12/2011 8:56:12 PM

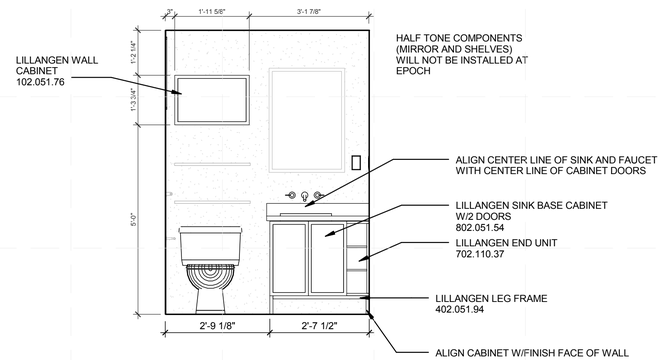

D1 EAST INTERIOR ELEVATION BATHROOM SK
1/2" = 1'-0"

8/12/2011 8:56:14 PM

TEAM NAME:
TEAM MASSACHUSETTS
ADDRESS:
MASSART
621 HUNTINGTON AVE.
BOSTON MA 02115
CONTACT:
SPENCER CULHANE 602.677.6388
SPENCER.CULHANE@4DHOME.US
ISSUE DATE: WWW.4DHOME.US

U.S. DEPARTMENT OF ENERGY
SOLAR DECATHLON 2011
WWW.SOLARDECATHLON.GOV

LOT NUMBER: NA
DRAWN BY: Author
CHECKED BY: Checker
COPYRIGHT: NONE: PROJECT IS PUBLIC DOMAIN

CD SHEET REFERENCE

I-201 SK

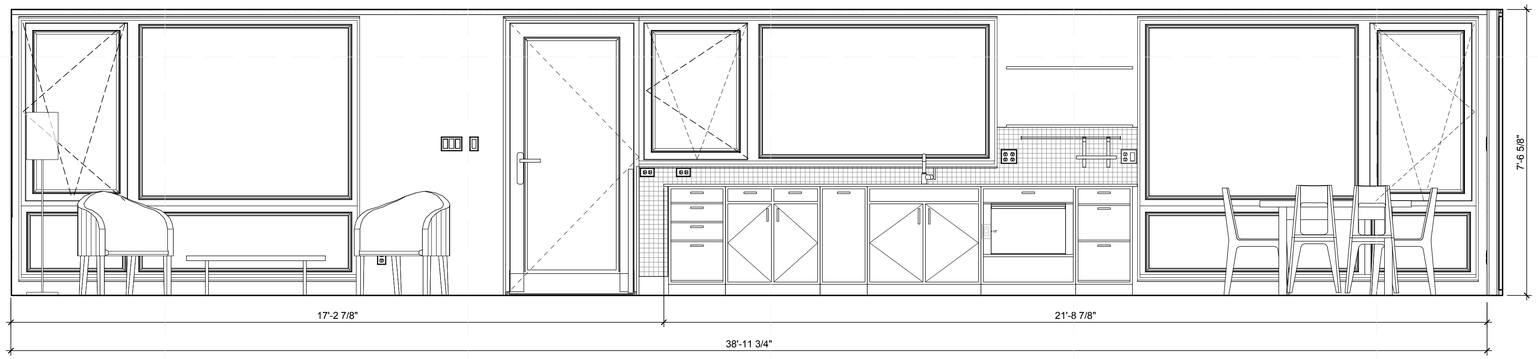

D1 SOUTH INTERIOR ELEVATION LIVING / KITHCEN / DINING
1/2" = 1'-0"

0 1' 2' 4'

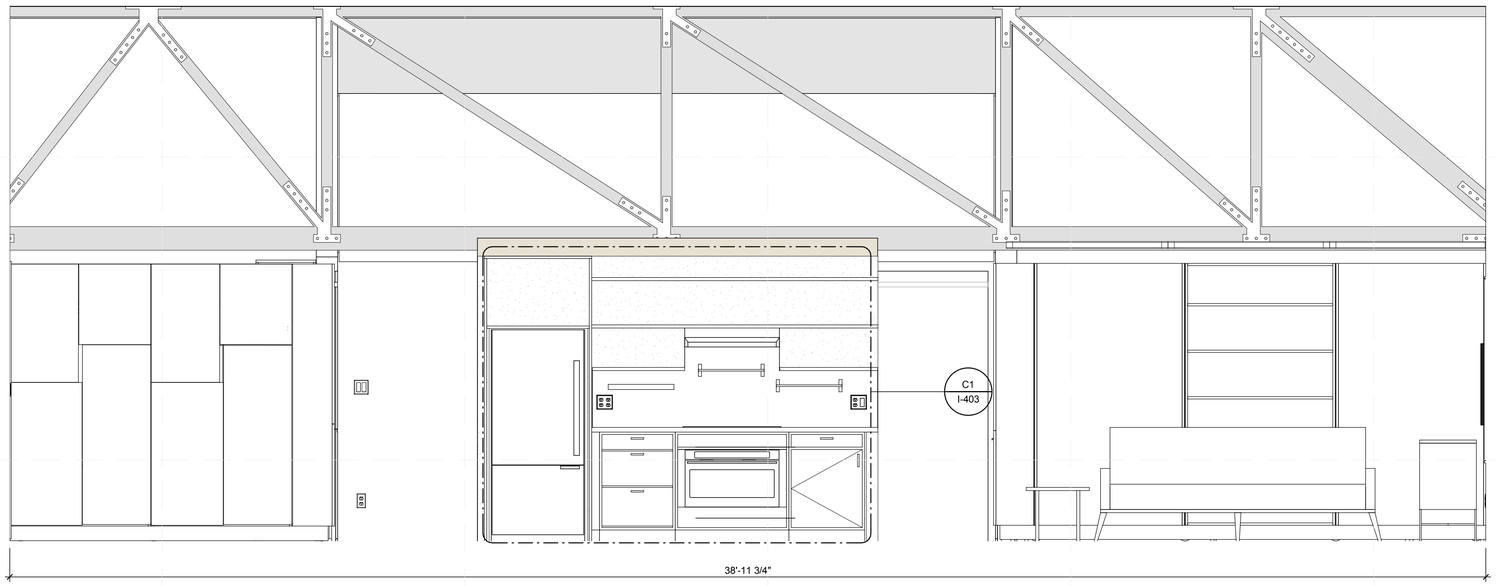

A1 NORTH INTERIOR ELEVATION DINING / KITCHEN / LIVING
1/2" = 1'-0"

0 1' 2' 4'

8/12/2011 8:56:24 PM

GENERAL SHEET NOTES

REFERENCE KEYNOTES

SHEET KEYNOTES

4D HOME

TEAM NAME:	TEAM MASSACHUSETTS
ADDRESS:	MASSART 621 HUNTINGTON AVE. BOSTON MA 02115
CONTACT:	SPENCER CULHANE 602.677.6388 SPENCER.CULHANE@4DHOME.US WWW.4DHOME.US

CONSULTANTS

EPOCH HOMES

PASSIVE HOUSE INSTITUTE US

SLADEN FEINSTEIN INTEGRATED LIGHTING

LEMESSURIER CONSULTANTS, STRUCTURAL ENGINEERS

CLIENT

U.S. DEPARTMENT OF ENERGY

SOLAR DECATHLON 2011

WWW.SOLARDECATHLON.GOV

U.S. DEPARTMENT OF ENERGY SOLAR DECATHLON

MARK	DATE	DESCRIPTION

LOT NUMBER:	NA
DRAWN BY:	EC
CHECKED BY:	PH
COPYRIGHT:	NONE: PROJECT IS PUBLIC DOMAIN

SHEET TITLE

INTERIOR DESIGN ELEVATIONS

I-202

PRODUCED BY AN AUTODESK STUDENT PRODUCT
PRODUCED BY AN AUTODESK STUDENT PRODUCT
PRODUCED BY AN AUTODESK STUDENT PRODUCT
PRODUCED BY AN AUTODESK STUDENT PRODUCT

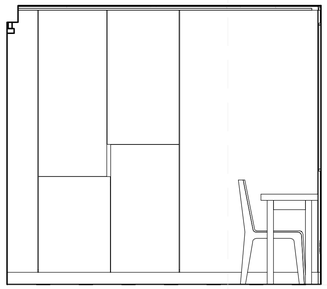

C1 SOUTH INTERIOR ELEVATION KID'S BEDROOM
1/2" = 1'-0"

0 1' 2' 4'

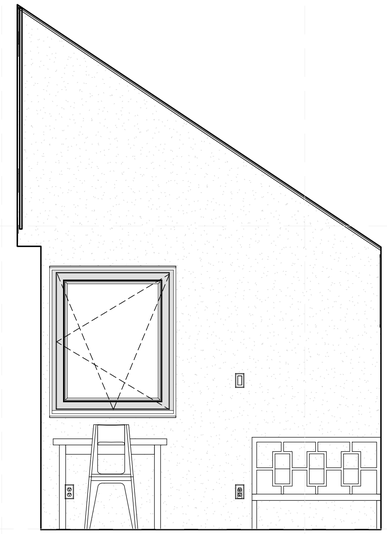

C4 WEST INTERIOR ELEVATION KID'S BEDROOM
1/2" = 1'-0"

0 1' 2' 4'

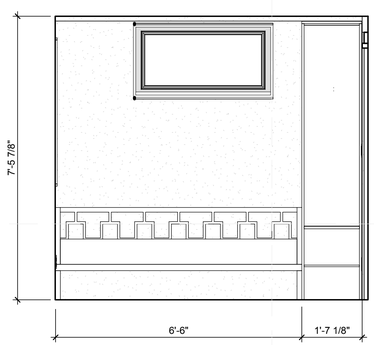

A1 NORTH INTERIOR ELEVATION KID'S BEDROOM
1/2" = 1'-0"

0 1' 2' 4'

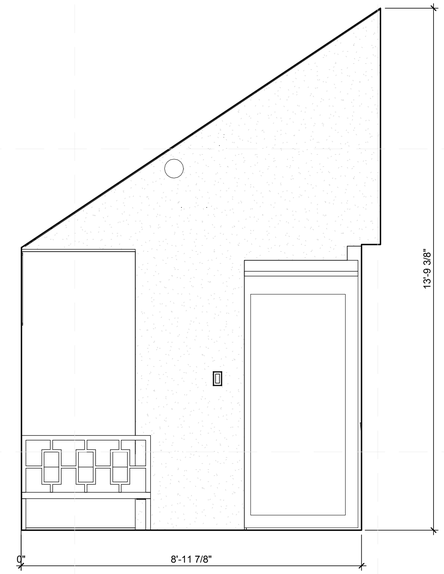

A4 EAST INTERIOR ELEVATION KID'S BEDROOM
1/2" = 1'-0"

0 1' 2' 4'

GENERAL SHEET NOTES

REFERENCE KEYNOTES

SHEET KEYNOTES

4D HOME

TEAM NAME:	TEAM MASSACHUSETTS
ADDRESS:	MASSART 621 HUNTINGTON AVE. BOSTON MA 02115
CONTACT:	SPENCER CULHANE 602.677.6388 SPENCER.CULHANE@4DHOME.US WWW.4DHOME.US

CONSULTANTS

EPOCH HOMES

PASSIVE HOUSE INSTITUTE US

SLADEN FEINSTEIN INTEGRATED LIGHTING

LEMESSURIER CONSULTANTS, STRUCTURAL ENGINEERS

CLIENT

U.S. DEPARTMENT OF ENERGY

SOLAR DECATHLON 2011

WWW.SOLARDECATHLON.GOV

U.S. DEPARTMENT OF ENERGY SOLAR DECATHLON

MARK	DATE	DESCRIPTION

LOT NUMBER:	NA
DRAWN BY:	EC
CHECKED BY:	PH
COPYRIGHT:	NONE: PROJECT IS PUBLIC DOMAIN

SHEET TITLE

INTERIOR DESIGN ELEVATIONS

I-204

8/12/2011 8:56:42 PM

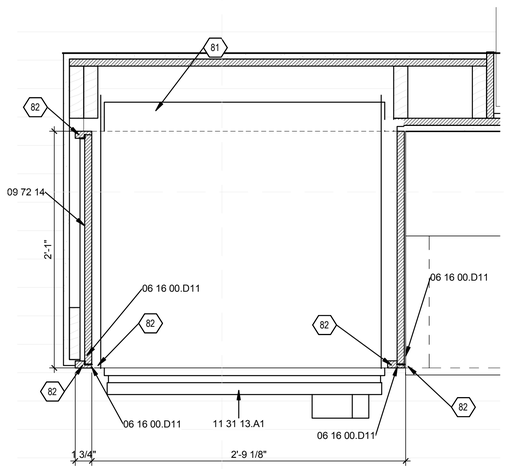

C1 CALL-OUT OF INTERIOR KITCHEN PLAN
1 1/2" = 1'-0"

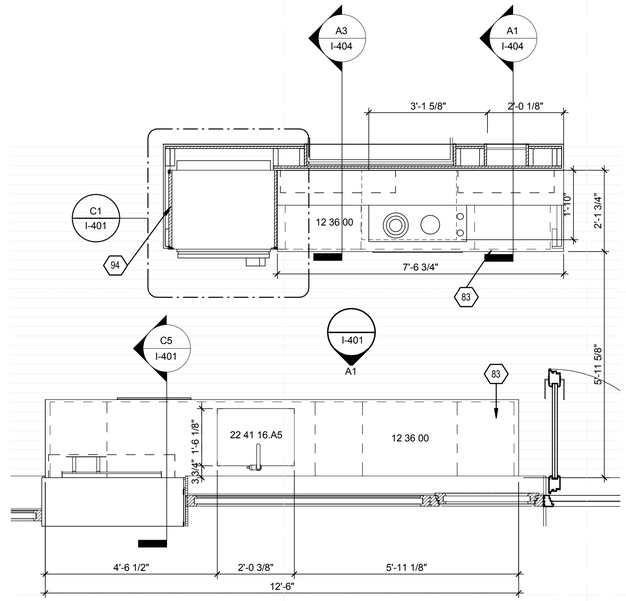

C3 INTERIOR KITCHEN PLAN
1/2" = 1'-0"

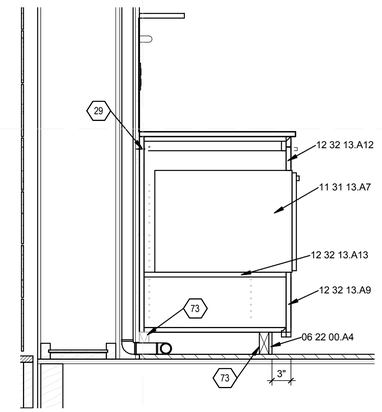

C5 CABINET DETAIL
1" = 1'-0"

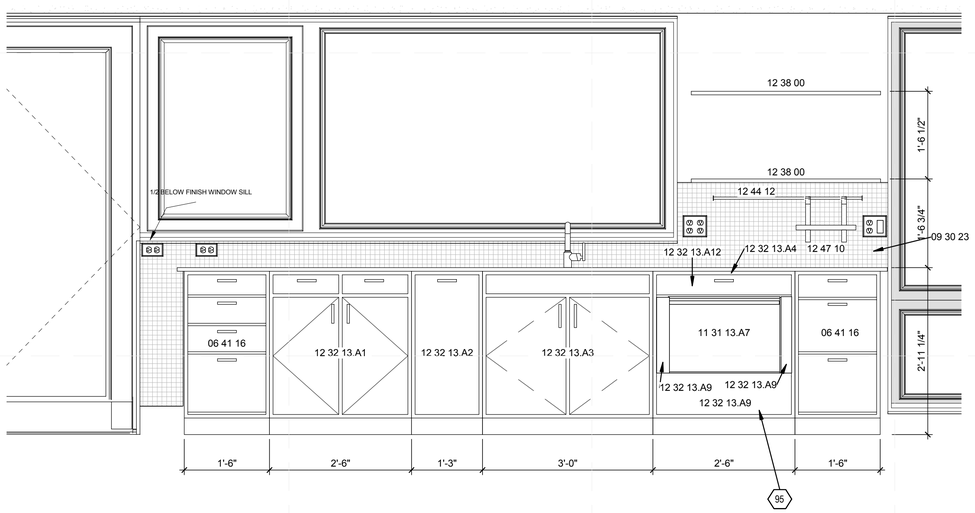

A1 SOUTH INTERIOR ELEVATION KITHCEN
3/4" = 1'-0"

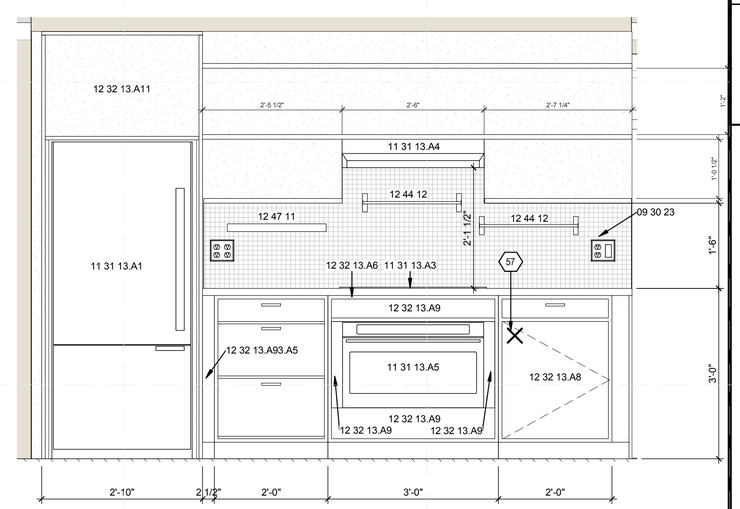

A4 NORTH INTERIOR ELEVATION KITCHEN
3/4" = 1'-0"

GENERAL SHEET NOTES

1. UNLESS OTHERWISE STATED, CABINETS ARE FROM IKEA.
2. WHEN CUTTING FILLER PIECES, WRAP TAPE AROUND CUT LINE TO PREVENT PAINT FROM CHIPPING.
3. COUNTERTOP OVERHANGS 3/4"
4. PLUMBING AND RECEPTACLE LOCATIONS ARE SUBJECT TO CHANGE BASED ON PRODUCT SPECIFICATIONS.
5. CABINET SUPPORT/TOEKICK IS CUSTOM MADE FROM STOCK 2X4 AND FACED WITH PRE-PAINTED TRIM, COLOR IS TBD
6. CUT AND INSTALL FILLER PANELS SO CUT EDGE IS NOT EXPOSED.
7. INSTALL SHELVES FOR APPLIANCES BEFORE INSTALLING FILLER PANELS.
8. UPPER SHELVING IS STILL BEING DESIGNED AND WILL BE INSTALLED BY STUDENTS IN BOSTON.

REFERENCE KEYNOTES

06 16 00.D11	3/4" PLYWOOD
06 22 00.A4	1X4 WOOD TRIM
06 41 16	PLASTIC-LAMINATE-CLAD ARCHITECTURAL CABINETS
09 30 23	GLASS MOSAIC TILING
09 72 14	MAGNETIC CHALK BOARD
11 31 13.A1	REFRIGERATOR
11 31 13.A3	RANGE
11 31 13.A4	EXHAUST HOOD
11 31 13.A5	OVEN
11 31 13.A7	DISHWASHER
12 32 13.A1	TWO DOOR, TWO DRAWER 30" CABINET
12 32 13.A2	SINGLE DRAWER 15" CABINET
12 32 13.A3	TWO DOOR UNDER-SINK 36" CABINET
12 32 13.A4	30" CABINET FRAME WITH DRAWERS
12 32 13.A5	THREE DRAWER 24"
12 32 13.A6	36" CABINET FRAME
12 32 13.A8	SINGLE DOOR, SINGLE DRAWER 24"
12 32 13.A9	FILLER PANEL CUT TO SIZE
12 32 13.A11	CUSTOM MADE REFRIGERATOR ENCLOSURE
12 32 13.A12	3" DEEP DRAWER
12 32 13.A13	SHELF
12 36 00	COUNTERTOPS
12 38 00	OPEN SHELVING
12 44 12	TOWEL BAR
12 47 10	PAPER TOWEL HOLDER
12 47 11	MAGNETIC KNIFE HOLDER
22 41 16.A5	UNDER COUNTER SINK

SHEET KEYNOTES

29	SECURELY FASTEN BASE CABINET TO WALL
57	ORGANIZER PROVIDED DATALOGGER
73	2X4 USED AS CABINET SUPPORT
81	REFRIGERATOR RECESSED INTO WALL
82	EDGE TAPE EXPOSED EDGES
83	COUNTERTOP OVERHANGS CABINETS 3/4"
94	CUSTOM ELEMENT FABRICATED BY MASSART
95	CUSTOM IKEA CABINET

TEAM NAME: TEAM MASSACHUSETTS
ADDRESS: MASSART 621 HUNTINGTON AVE. BOSTON MA 02115
CONTACT: SPENCER CULHANE 602.677.6388 SPENCER.CULHANE@4DHOME.US WWW.4DHOME.US

CONSULTANTS

EPOCH HOMES

PASSIVE HOUSE INSTITUTE US

SLADEN FEINSTEIN INTEGRATED LIGHTING

LEMESSURIER CONSULTANTS, STRUCTURAL ENGINEERS

CLIENT

U.S. DEPARTMENT OF ENERGY

SOLAR DECATHLON 2011

WWW.SOLARDECATHLON.GOV

MARK	DATE	DESCRIPTION

LOT NUMBER:	NA
DRAWN BY:	EC
CHECKED BY:	PH
COPYRIGHT:	NONE: PROJECT IS PUBLIC DOMAIN

SHEET TITLE

LARGE-SCALE KITCHEN DESIGN DRAWINGS

I-401

8/12/2011 8:56:51 PM

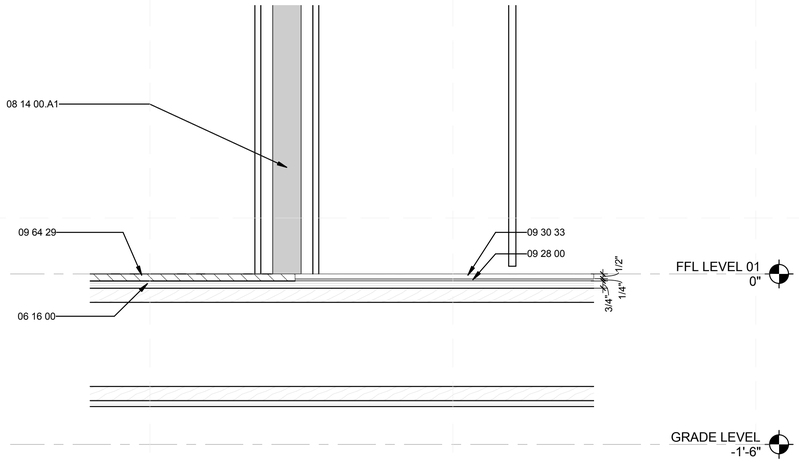

C1 BATHROOM FLOOR DETAIL
1 1/2" = 1'-0"

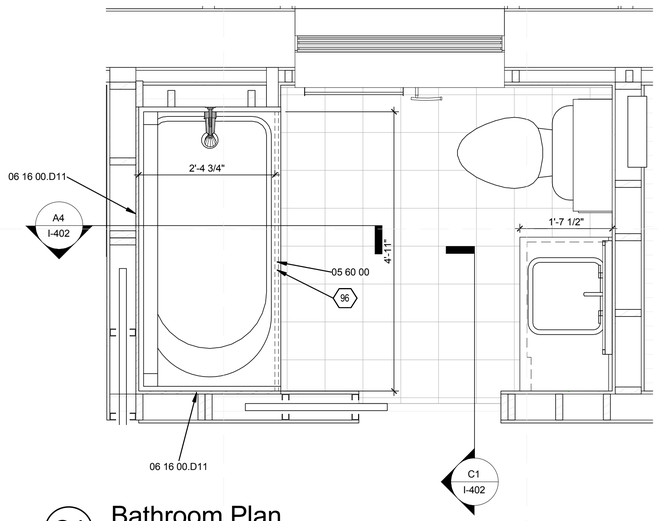

C4 Bathroom Plan
3/4" = 1'-0"

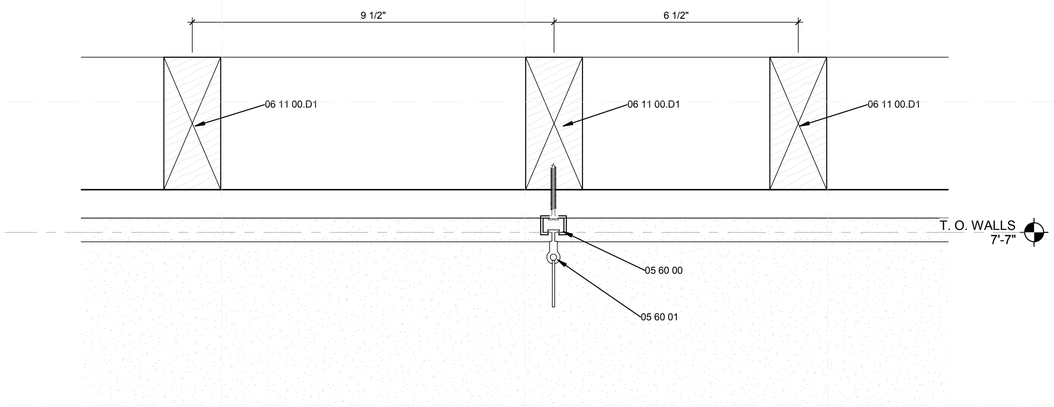

A1 RECESSED TRACK DETAIL
6" = 1'-0"

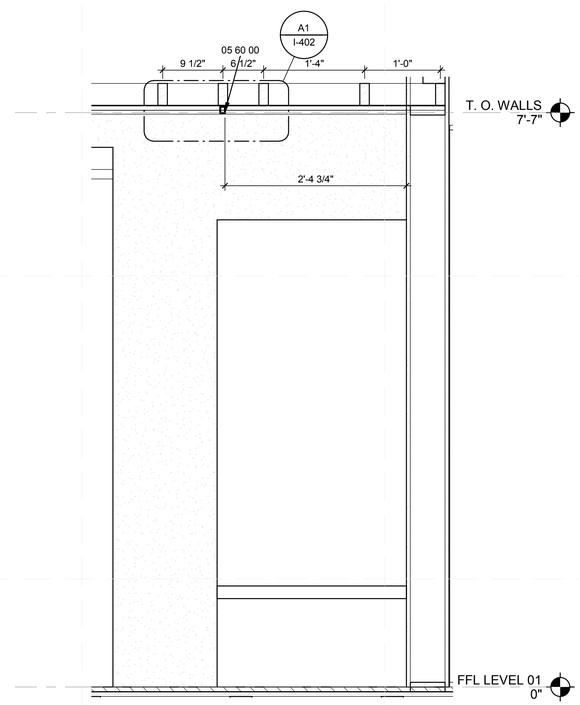

A4 BATHROOM SECTION
1" = 1'-0"

GENERAL SHEET NOTES

1. JOIST IN DRAWINGS A1 AND A4 ARE MEASURED FROM CENTER LINE.

REFERENCE KEYNOTES

05 60 00	ALUMINUM RECESSED CURTAIN TRACK
05 60 01	BUTTON CARRIER
06 11 00.D1	2X4
06 16 00	SHEATHING
06 16 00.D11	3/4" PLYWOOD
08 14 00.A1	1 3/8" SOLID CORE DOOR
09 28 00	BACKING BOARDS AND UNDERLAYMENTS
09 30 33	STONE TILING
09 64 29	WOOD STRIP AND PLANK FLOORING

SHEET KEYNOTES

96	CUT TO SIZE

4D HOME

TEAM NAME: TEAM MASSACHUSETTS
ADDRESS: MASSART 621 HUNTINGTON AVE. BOSTON MA 02115
CONTACT: SPENCER CULHANE 602.677.6388 SPENCER.CULHANE@4DHOME.US WWW.4DHOME.US

CONSULTANTS

EPOCH HOMES
PASSIVE HOUSE INSTITUTE US
SLADEN FEINSTEIN INTEGRATED LIGHTING
LEMESSURIER CONSULTANTS, STRUCTURAL ENGINEERS

CLIENT
U.S. DEPARTMENT OF ENERGY
SOLAR DECATHLON 2011
WWW.SOLARDECATHLON.GOV

U.S. DEPARTMENT OF ENERGY SOLAR DECATHLON

MARK	DATE	DESCRIPTION

LOT NUMBER: NA
DRAWN BY: EC
CHECKED BY: Checker
COPYRIGHT: NONE: PROJECT IS PUBLIC DOMAIN

SHEET TITLE
BATHROOM DETAILS

I-402

8/12/2011 8:56:57 PM

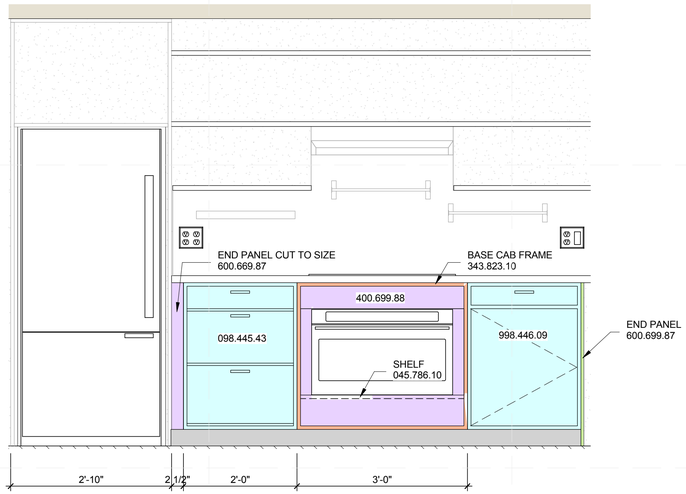

USE *PERFEKT ABSTRAKT COVER FOR HIGH CABINET* 400.699.88 (24 5/8" X 79 1/2" X 1/2") AS FILLER PANELS FOR OVEN CABINET

C1 NORTH IKEA CABINET INSTALL
3/4" = 1'-0"

IKEA									
DESCRIPTION	**MODEL NAME**	**MODEL #**	**COLOR**	**FRAME COLOR**	**WIDTH**	**DEPTH**	**HEIGHT**	**PRICE**	**#**
Oven Shelf	Rationell Shelf	045.786.10	Melamin white	N/A	34 3/8"	23 7/8"	3/4"	$20.00	1
Sink Cabinet	Base cab for DOMSJO 2 bowl sink	098.266.76	Abstrakt high gloss white	white	35 7/8"	24 1/8"	30 3/8"	$221.00	1
Cabinet, 4 Drawer	Base cabinet with 4 drawers 18"	098.268.60	Abstrakt high gloss white	white	17 7/8"	24 7/8"	30 3/8"	$259.96	1
Cabinet	Akurum Base cabinet with 4 drawers 18"	098.268.60	Abstrakt high gloss white	white	17 7/8"	24 7/8"	30 3/8"	$259.96	1
Cabinet, 3 Drawer	Akurum Base cabinet with 3 drawers 24"	098.445.43	Abstrakt high gloss white	white	23 7/8"	24 1/8"	30 3/8"	$321.97	1
Dishwasher Cab Drawer Upper	Rationell Fully-extending drawer	101.070.72	N/A	Silver	28"	20 7/8"	3 1/8"	$30.00	1
Cabinet, 3 Drawer	Akurum Base cabinet with 3 drawers 18"	198.268.45	Abstrakt high gloss white	white	18"	24 7/8"	30 3/8"	$227.97	1
Dishwasher Shelf	Rationell	245.785.10	Melamin white	N/A	28 3/8"	23 7/8"	3/4"	$16.00	1
Oven Cabinet	Base Cabinet Frame 36"	343.823.10	N/A	white	35 7/8"	24 1/8"	30 3/8"	$45.00	1
Filler Panel	Perfekt Abstrakt	400.699.88	Abstrakt high gloss white	N/A	24 5/8"	1/2"	79 1/2"	$95.00	2
Dishwasher Cabinet	Base cabinet frame 30"	543.822.10	N/A	white	29 7/8"	24 1/8"	30 3/8"	$41.00	1
Dishwaser Cab Drawer Front	Abstrakt	600.699.68	High Gloss White	N/A	29 7/8"	3/4"	6 1/4"	$60.00	1
End Cover Panel	Perfekt Abstrakt	600.699.87	high gloss white	N/A	24 5/8"	1/2"	30 3/8"	$38.00	4
Cabinet for Trash	Base cabinet with pull-out storage 15"	898.234.24	Abstrakt high gloss white	white	15"	24"	34 5/8"	$225.97	1
Cabinet 2 Door, 2 Drawer	Base cab/shelf/2 drawer/ 2 doors 30"	898.268.37	Abstrakt high gloss white	white	29 7/8"	24 3/4"	30 3/8"	$355.98	1
Cabinet, 1 Door, 1 Drawer	Akurum Base Cab w shelf/drawer/door 24"	998.446.09	Abstrakt high gloss white	white	23 7/8"	24 3/4"	30 3/8"	$234.99	1

GENERAL SHEET NOTES

1. CABINETS DRAWN ARE SYMBOLIC REPRESENTATIONS OF ACTUAL CABINETS. OVER ALL DIMENSION AND TYPE ARE CORRECT. APPEARANCE, DOOR/DRAWER SIZES ARE NOT.
2. INSTALL ALL CABINETRY ACCORDING TO IKEA ASSEMBLY INSTRUCTIONS.
3. CENTER APPLIANCES ON SHELF SO THAT FILLER PIECES ARE SYMMETRICAL ALONG THE VERTICAL AXIS.
4. CUT FILLER PANELS BASED ON PHYSICAL DIMENSIONS.
5. WHEN CUTTING FILLER PANELS, WRAP CUT-LINE WITH PAINTERS TAPE BEFORE MAKING CUT TO PREVENT HIGH GLOSS PAINT FROM CHIPPING.
6. INSTALL FILLER PANELS SO RAW EDGE IS NOT EXPOSED.

REFERENCE KEYNOTES

SHEET KEYNOTES

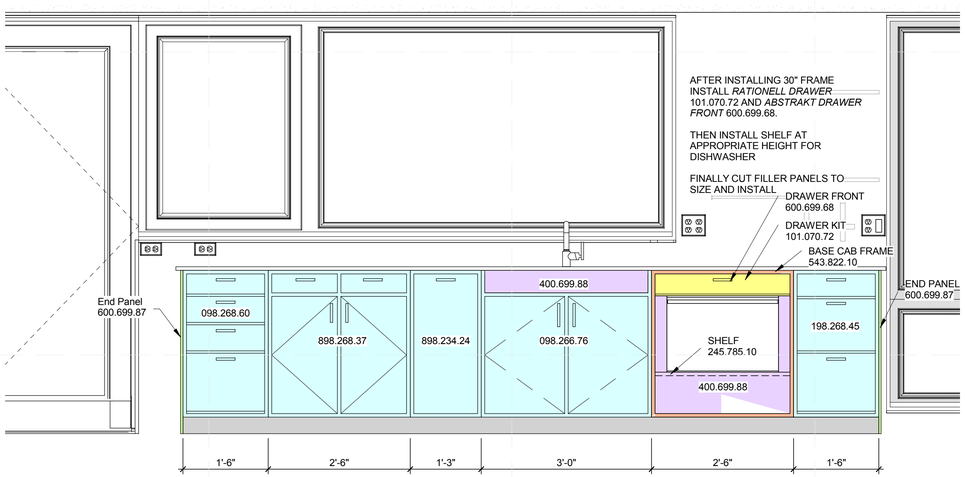

USE *PERFEKT ABSTRAKT COVER FOR HIGH CABINET* 400.699.88 (24 5/8" X 79 1/2" X 1/2") AS FILLER PANELS FOR SINK CABINET AND DISHWASHER CABINET

A1 SOUTH IKEA CABINET INSTALL
3/4" = 1'-0"

	STANDARD IKEA CABINET
	IKEA FILLER PANEL CUT TO SIZE
	TOE KICK (CUSTOM MADE BY EPOCH)
	IKEA DRAWER
	IKEA CABINET FRAME
	IKEA BASE CABINET END PANEL
XXX.XXX.XX	IKEA MODEL NUMBER
- - - - - - - - - - - -	HIDDEN FEATURE (INDICATES SHELF)

4D HOME

TEAM NAME: TEAM MASSACHUSETTS
ADDRESS: MASSART 621 HUNTINGTON AVE. BOSTON MA 02115
CONTACT: SPENCER CULHANE 602.877.6388 SPENCER.CULHANE@4DHOME.US WWW.4DHOME.US

CONSULTANTS

EPOCH HOMES
PASSIVE HOUSE INSTITUTE US
SLADEN FEINSTEIN INTEGRATED LIGHTING
LEMESSURIER CONSULTANTS, STRUCTURAL ENGINEERS

CLIENT
U.S. DEPARTMENT OF ENERGY
SOLAR DECATHLON 2011
WWW.SOLARDECATHLON.GOV

U.S. DEPARTMENT OF ENERGY SOLAR DECATHLON

MARK	DATE	DESCRIPTION

LOT NUMBER: NA
DRAWN BY: EC
CHECKED BY: Checker
COPYRIGHT: NONE: PROJECT IS PUBLIC DOMAIN

SHEET TITLE
IKEA CABINET INSTALL

I-403

8/12/2011 8:57:04 PM

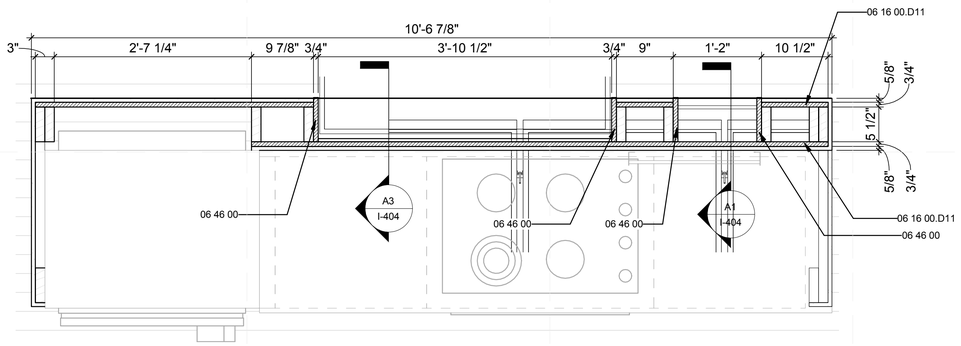

D1 CENTRAL WALL PLAN
1" = 1'-0"

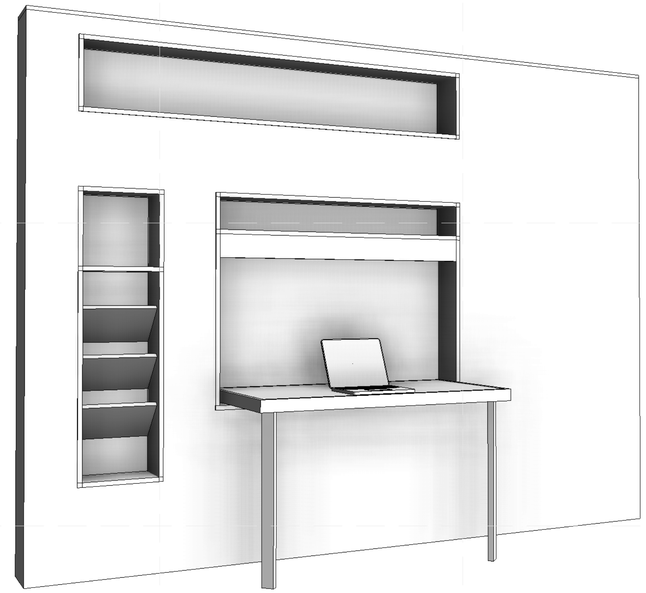

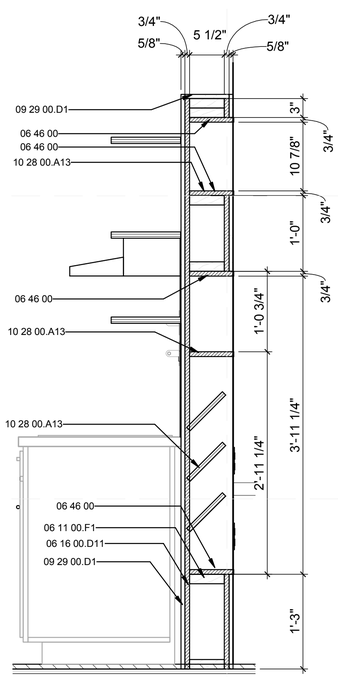

A1 CENTRAL WALL SECTION AT SHELVES
1" = 1'-0"

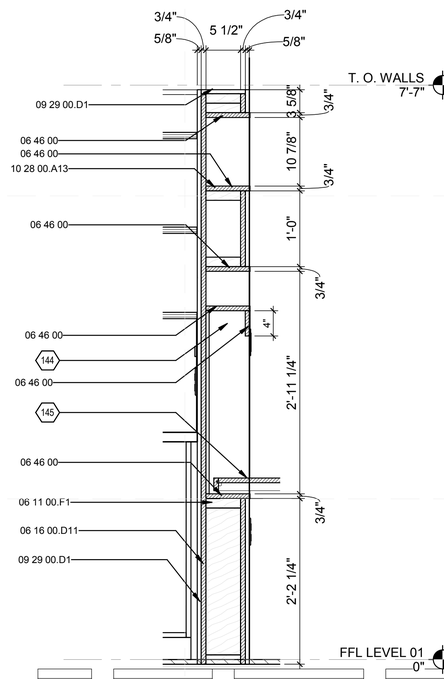

A3 CENTRAL WALL SECTION AT DESK
1" = 1'-0"

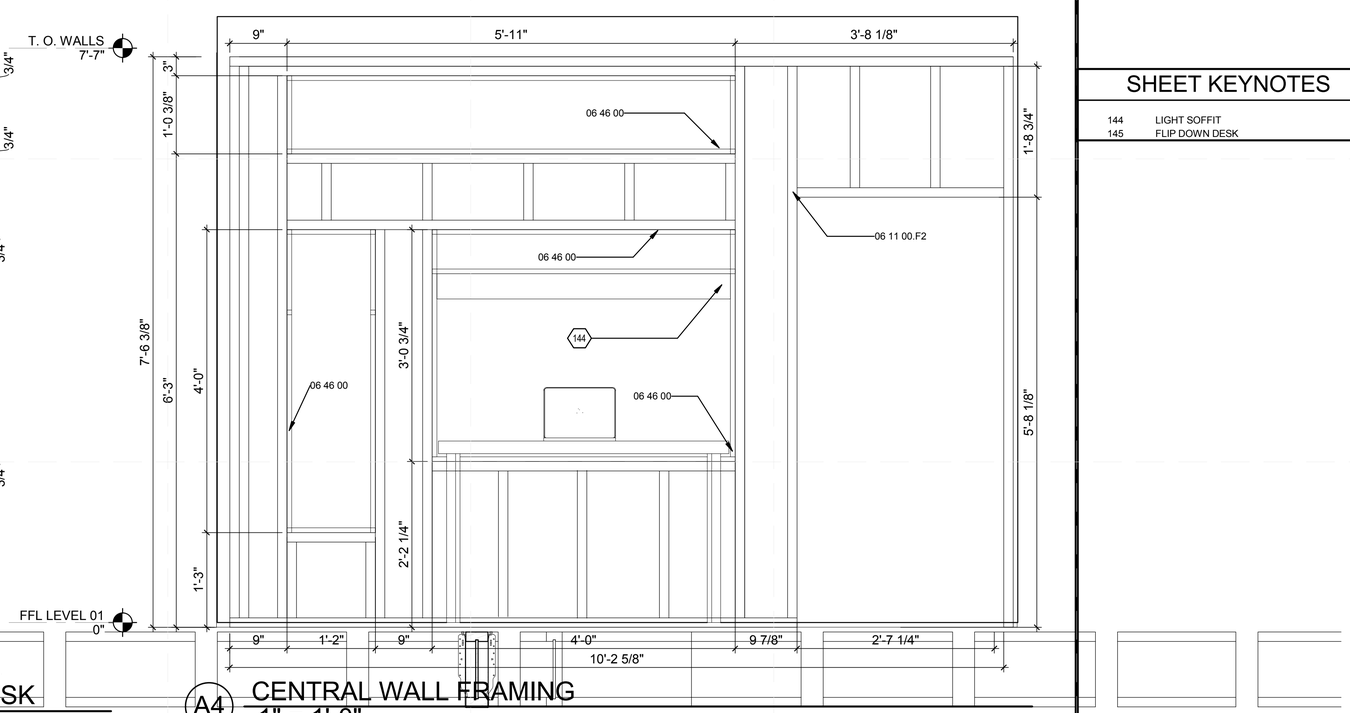

A4 CENTRAL WALL FRAMING
1" = 1'-0"

GENERAL SHEET NOTES

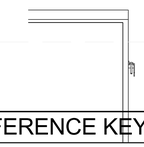

REFERENCE KEYNOTES

06 11 00.F1	2X6
06 11 00.F2	2X6 FRAMING
06 16 00.D11	3/4" PLYWOOD
06 46 00	WOOD TRIM
09 29 00.D1	5/8" GYPSUM WALLBOARD
10 28 00.A13	SHELF

SHEET KEYNOTES

144	LIGHT SOFFIT
145	FLIP DOWN DESK

4D HOME

TEAM NAME:	TEAM MASSACHUSETTS
ADDRESS:	MASSART 621 HUNTINGTON AVE BOSTON MA 02115
CONTACT:	SPENCER CULHANE 602.677.6388 SPENCER.CULHANE@4DHOME.US WWW.4DHOME.US

CONSULTANTS

EPOCH HOMES

PASSIVE HOUSE INSTITUTE US

SLADEN FEINSTEIN INTEGRATED LIGHTING

LEMESSURIER CONSULTANTS, STRUCTURAL ENGINEERS

CLIENT

U.S. DEPARTMENT OF ENERGY

SOLAR DECATHLON 2011

WWW.SOLARDECATHLON.GOV

U.S. DEPARTMENT OF ENERGY SOLAR DECATHLON

MARK	DATE	DESCRIPTION

LOT NUMBER:	NA
DRAWN BY:	FL
CHECKED BY:	Checker
COPYRIGHT:	NONE: PROJECT IS PUBLIC DOMAIN

SHEET TITLE

CENTRAL WALL

I-404

8/12/2011 8:57:11 PM

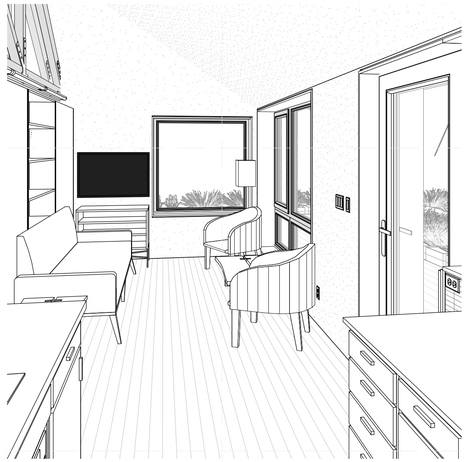

C1 LIVING ROOM PERSPECTIVE

NOT TO SCALE

C3 DINING PERSPECTIVE

NOT TO SCALE

C5 LONGITUDNAL PERSPECTIVE

NOT TO SCALE

A1 WORKSPACE PERSPECTIVE

NOT TO SCALE

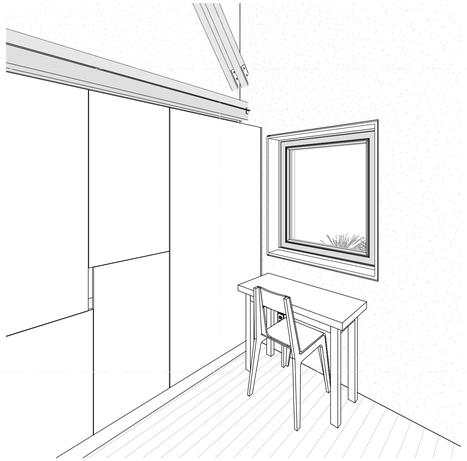

A3 KID'S BEDROOM PERSPECTIVE

NOT TO SCALE

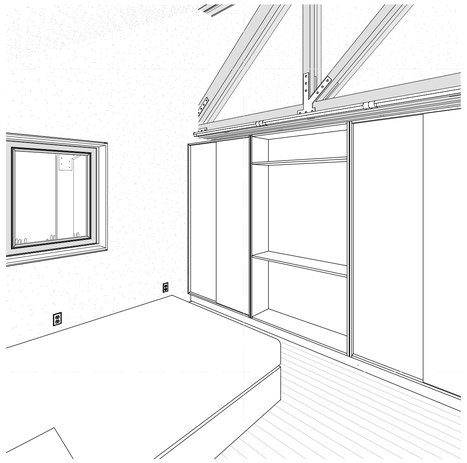

A5 PARENT'S BEDROOM PERSPECTIVE

NOT TO SCALE

GENERAL SHEET NOTES

REFERENCE KEYNOTES

SHEET KEYNOTES

TEAM NAME: TEAM MASSACHUSETTS

ADDRESS: MASSART 621 HUNTINGTON AVE. BOSTON MA 02115

CONTACT: SPENCER CULHANE 602.677.6388 SPENCER.CULHANE@4DHOME.US WWW.4DHOME.US

CONSULTANTS

EPOCH HOMES

PASSIVE HOUSE INSTITUTE US

SLADEN FEINSTEIN INTEGRATED LIGHTING

LEMESSURIER CONSULTANTS, STRUCTURAL ENGINEERS

CLIENT

U.S. DEPARTMENT OF ENERGY

SOLAR DECATHLON 2011

WWW.SOLARDECATHLON.GOV

MARK	DATE	DESCRIPTION

LOT NUMBER: NA

DRAWN BY: EC

CHECKED BY: Checker

COPYRIGHT: NONE: PROJECT IS PUBLIC DOMAIN

SHEET TITLE

INTERIOR PERSPECTIVES

I-405

8/12/2011 8:57:40 PM

CASEWORK SCHEDULE

Manufacturer	Model	Description	Finish	Width	Depth	Height	Count
							3
CAESARSTONE	2003	BATHROOM COUNTER	CONCRETE		1'-7 1/2"	3'-0"	1
CAESARSTONE	2003	KITCHEN COUNTER	CONCRETE	2'-1"		3'-0"	2
IKEA	098.266.76	SINK CABINET	ABSTRAKT HIGH GLOSS WHITE	3'-0"	2'-0"	2'-10 1/2"	1
IKEA	098.268.60	4 DRAWER	ABSTRAKT HIGH GLOSS WHITE	1'-6"	2'-0"	2'-10 1/2"	1
IKEA	098.445.43	3 DRAWER	ABSTRAKT HIGH GLOSS WHITE	2'-0"	2'-0"	2'-10 1/2"	1
IKEA	198.268.45	3 DRAWER	ABSTRAKT HIGH GLOSS WHITE	1'-6"	2'-0"	2'-10 1/2"	1
IKEA	343.823.10	OVEN CABINET	ABSTRAKT HIGH GLOSS WHITE	3'-0"	2'-0"	2'-10 1/2"	1
IKEA	400.699.88	FILLER PANEL	ABSTRAKT HIGH GLOSS WHITE	2 1/2"	2'-0"	2'-10 1/2"	1
IKEA	543.822.10	DISHWASHER CABINET	ABSTRAKT HIGH GLOSS WHITE	2'-6"	2'-0"	2'-10 1/2"	1
IKEA	898.234.24	CABINET FOR TRASH	ABSTRAKT HIGH GLOSS WHITE	1'-3"	2'-0"	2'-10 1/2"	1
IKEA	898.268.37	2 DOOR, 2 DRAWER	ABSTRAKT HIGH GLOSS WHITE	2'-6"	2'-0"	2'-10 1/2"	1
IKEA	998.446.09	SINGLE DOOR, SINGLE DRAWER	ALUMINUM , FROSTED GLASS	2'-0"	2'-0"	2'-10 1/2"	1
IKEA	GRUNDTAL	OPEN SHELF	GLASS	6'-0"	7 1/8"	3'-0"	2
IKEA	LILLANGEN	BATHROOM VANITY	ALUMINUM, WHITE	2'-7 1/2"	1'-4 1/8"	3'-0"	1
MASSART	N/A	OPEN SHELF	BIRCH PLYWOOD				4
MASSART	N/A	REFRIGERATOR ENCLOSURE	BIRCH PLYWOOD	2'-10"	2'-1"	3'-0"	1

FURNITURE SCHEDULE

Description	Manufacturer	Count
ARM CHAIR	WEST ELM	2
BEDSIDE TABLE	WEST ELM	1
CHAIR	MASSART	6
COFFEE TABLE	WEST ELM	1
DESK		1
DINING TABLE	MASSART	1
DRESSER	WEST ELM	1
MASTER BED	BEDWORKS	1
MEDIA CONSOLE		1
SIDE TABLE	WEST ELM	1
SOFA	WEST ELM	1
STORAGE WALL	MASSART	2
TWIN BED	WEST ELM	1
WARDROBE	MASSART	1

GENERAL SHEET NOTES

REFERENCE KEYNOTES

SHEET KEYNOTES

4D HOME

TEAM NAME: TEAM MASSACHUSETTS

ADDRESS: MASSART
621 HUNTINGTON AVE.
BOSTON MA 02115

CONTACT: SPENCER CULHANE 602.677.6388
SPENCER.CULHANE@4DHOME.US
WWW.4DHOME.US

CONSULTANTS

EPOCH HOMES

PASSIVE HOUSE INSTITUTE US

SLADEN FEINSTEIN INTEGRATED LIGHTING

LEMESSURIER CONSULTANTS, STRUCTURAL ENGINEERS

CLIENT

U.S. DEPARTMENT OF ENERGY

SOLAR DECATHLON 2011

WWW.SOLARDECATHLON.GOV

U.S. DEPARTMENT OF ENERGY SOLAR DECATHLON

MARK	DATE	DESCRIPTION

LOT NUMBER: NA

DRAWN BY: EC

CHECKED BY: PH

COPYRIGHT: NONE: PROJECT IS PUBLIC DOMAIN

SHEET TITLE

INTERIOR DESIGN SCHEDULES

I-601

8/12/2011 8:57:46 PM

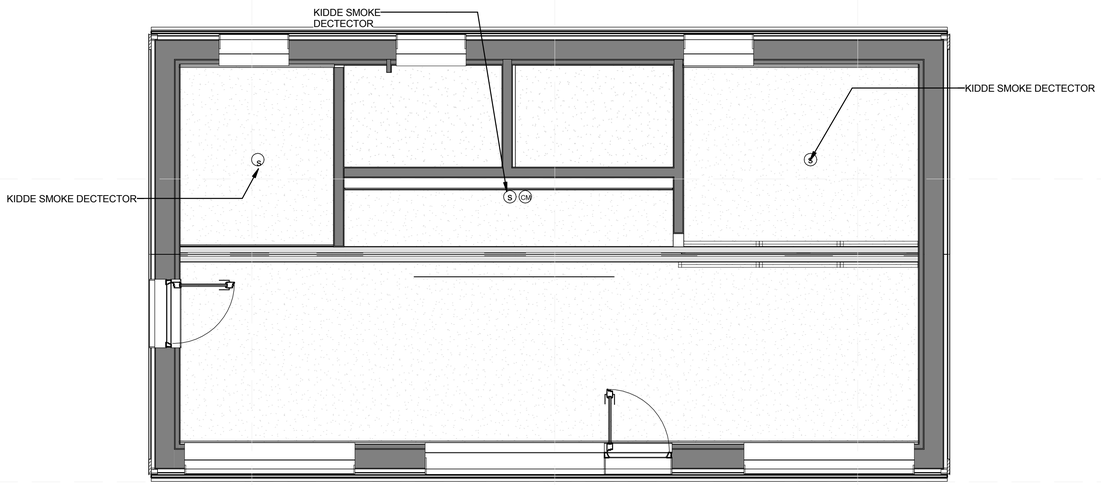

A1 FIRE DETECTION AND ALARM PLAN
1/4" = 1'-0"

0 2' 4' 8'

GENERAL SHEET NOTES

1. SMOKE DECTECTORS HARDWIRED, CONNECTED TOGETHER. NEEDS BOTH 120V AC AND 9V DC BATTERY
2.

REFERENCE KEYNOTES

SHEET KEYNOTES

TEAM NAME: TEAM MASSACHUSETTS
ADDRESS: MASSART 621 HUNTINGTON AVE. BOSTON MA 02115
CONTACT: SPENCER CULHANE 602.677.6388 SPENCER.CULHANE@4DHOME.US WWW.4DHOME.US

CONSULTANTS

EPOCH HOMES
PASSIVE HOUSE INSTITUTE US
SLADEN FEINSTEIN INTEGRATED LIGHTING
LEMESSURIER CONSULTANTS, STRUCTURAL ENGINEERS

CLIENT

U.S. DEPARTMENT OF ENERGY
SOLAR DECATHLON 2011
WWW.SOLARDECATHLON.GOV

MARK	DATE	DESCRIPTION

LOT NUMBER: NA
DRAWN BY: EC
CHECKED BY: PH
COPYRIGHT: NONE: PROJECT IS PUBLIC DOMAIN

SHEET TITLE

FIRE DETECTION AND ALARM

F-101

8/12/2011 8:50:02 PM

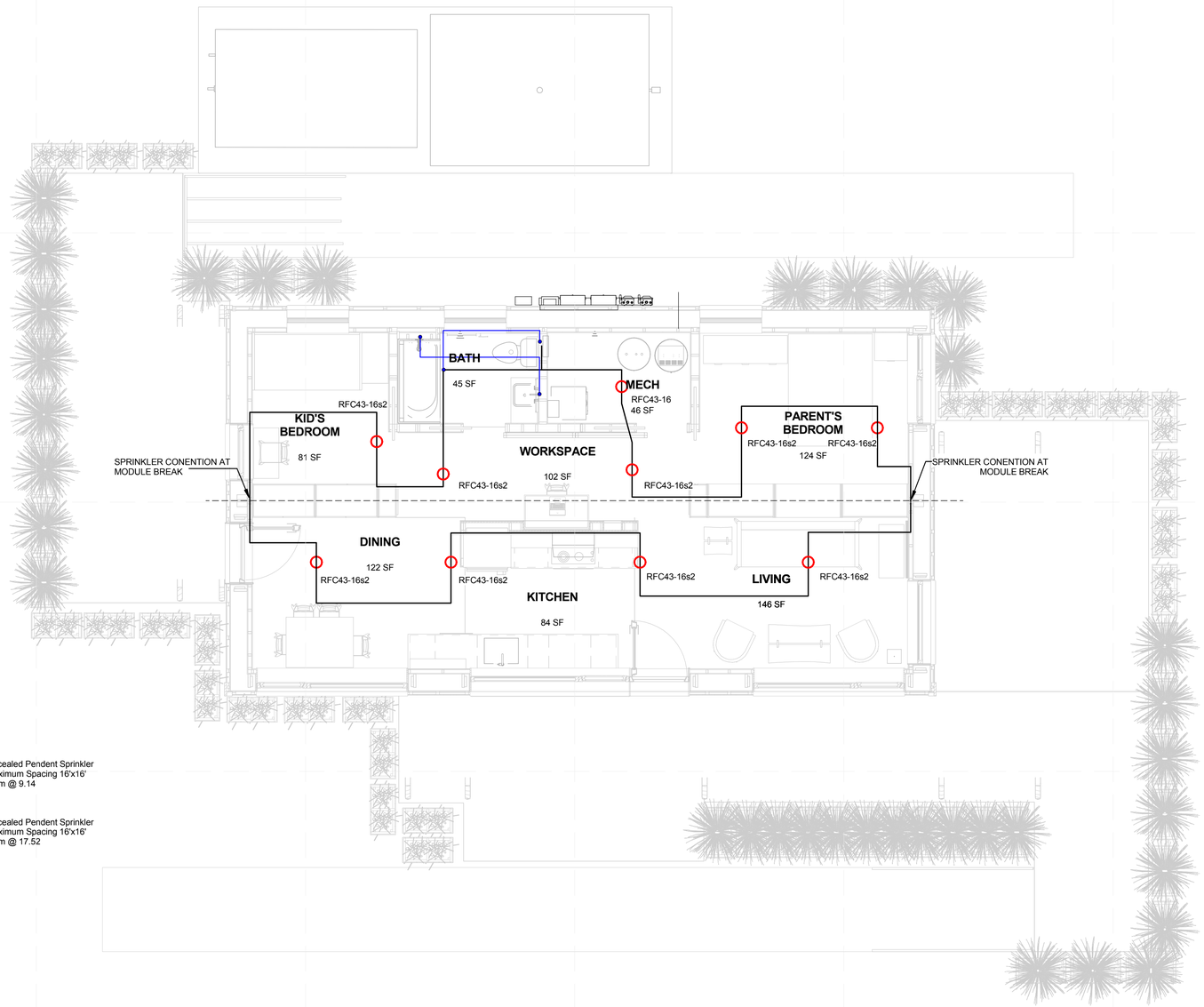

RFC43-16
RELIABLE Model RFC43 Concealed Pendent Sprinkler
K=4.3, 165Fo, 3/8" Orifice, Maximum Spacing 16'x16'
Sprinkler head demand: 13 gpm @ 9.14

RFC43-16s2
RELIABLE Model RFC43 Concealed Pendent Sprinkler
K=4.3, 165Fo, 3/8" Orifice, Maximum Spacing 16'x16'
Sprinkler head demand: 18 gpm @ 17.52

A1 SPRINKLER PLAN
1/4" = 1'-0"

0 2' 4' 8'

GENERAL SHEET NOTES

1. SPRINKLER LINES RUN THROUGH CHASE IN CEILING.

REFERENCE KEYNOTES

SHEET KEYNOTES

4D HOME

TEAM NAME:	TEAM MASSACHUSETTS
ADDRESS:	MASSART 621 HUNTINGTON AVE. BOSTON MA 02115
CONTACT:	SPENCER CULHANE 602.677.6388 SPENCER.CULHANE@4DHOME.US WWW.4DHOME.US

CONSULTANTS

EPOCH HOMES
PASSIVE HOUSE INSTITUTE US
SLADEN FEINSTEIN INTEGRATED LIGHTING
LEMESSURIER CONSULTANTS, STRUCTURAL ENGINEERS

CLIENT

U.S. DEPARTMENT OF ENERGY
SOLAR DECATHLON 2011
WWW.SOLARDECATHLON.GOV

U.S. DEPARTMENT OF ENERGY SOLAR DECATHLON

MARK	DATE	DESCRIPTION

LOT NUMBER:	NA
DRAWN BY:	EC
CHECKED BY:	PH
COPYRIGHT:	NONE: PROJECT IS PUBLIC DOMAIN

SHEET TITLE

FIRE SUPPRESSION

F-102

8/12/2011 8:50:38 PM

GENERAL FIRE PROTECTION/ SUPPRESSION NOTES

1. CONTRACTOR SHALL REFER TO ALL BUILDING CODES, SPECIFICATIONS, AND TRADE STANDARDS.
2. CONTRACTOR SHALL OBTAIN AND PROVIDE ALL TESTING DATA ON MATERIALS AND INSTALLATION OF ALL FIRE PROTECTION/SUPPRESSION MEASURES.
3. ALL RATINGS ARE TO COMPLY WITH UNDERWRITERS LABORATORIES TEST RATINGS (UL RATING).
4. ALL MEASURES ARE TO MEET STANDARD LEVEL OF FIRE PROTECTION/SUPPRESSION RATING FOR APPROPRIATE APPLICATIONS.
5. ALL SYSTEMS MUST BE CERTIFIED/INSPECTED BY AN AUTHORIZED PERSON ENSURING QUALITY OF SYSTEM/INSTALLATION.
6. ALL SYSTEM COMPONENTS ARE TO BE PROPERLY INSULATED AND ISOLATED APPROPRIATELY BASED ON THEIR ENVIRONMENT AND USE.

FIRE PROTECTION

SOLAR DECATHLON

CONSTRUCTION DOCUMENTS

TEAM NAME: TEAM MASSACHUSETTS

ADDRESS: MASSART 621 HUNTINGTON AVE. BOSTON MA 02115

CONTACT: SPENCER CULHANE 602.677.6388 SPENCER.CULHANE@4DHOME.US

CONSULTANTS

EPOCH HOMES

PASSIVE HOUSE INSTITUTE US

SLADEN FEINSTEIN INTEGRATED LIGHTING

LEMESSURIER CONSULTANTS, STRUCTURAL ENGINEERS

CLIENT

U.S. DEPARTMENT OF ENERGY

SOLAR DECATHLON 2011

WWW.SOLARDECATHLON.GOV

MARK	DATE	DESCRIPTION

LOT NUMBER: NA

DRAWN BY: SC

CHECKED BY: Checker

COPYRIGHT: NONE: PROJECT IS PUBLIC DOMAIN

SHEET TITLE

FIRE PROTECTION NOTES AND SYMBOLS

F-713

8/12/2011 8:50:50 PM

PLUMBING LEGEND	
MARK	DESCRIPTION
	WATER LINE COLD
	WATER LINE HOT
	DRAINAGE LINE
	90 DEGREE ELBOW FITTING
	TEE FITTING
	TEE FITTING WITH PIPE FACING UP
	90 DEGREE ELBOW FITTING WITH PIPE FACING UP
	COUPLING
	SIDE WALL SPRINKLER HEAD

PLUMBING
SOLAR DECATHLON
CONSTRUCTION DOCUMENTS

GENERAL PLUMBING NOTES

1. REFER TO DESIGN DRAWINGS, DETAILS, SPECIFICATIONS, AND STANDARDS.
2. DO NOT SCALE OR REPLICATE/REINTERPRET DRAWINGS. IN CASE OF QUESTION, CONSULT ARCHITECT.
3. CONTRACTOR IS TO PROVIDE THE SERVICES NECESSARY TO COMPLETE THE CERTIFIED AND PROPER INSTALLATION OF SPECIFIED PLUMBING SYSTEMS AND ENSURE THEIR PROPER COMPLETION.
4. ALL WORK IS TO COMPLY WITH APPROPRIATE BUILDING CODES, AND QUALITY CERTIFICATIONS SPECIFIED BY SOLAR DECATHLON CODE AND DESIGN SPECIFICATIONS.
5. ALL COMPONENTS ARE TO BE DELIVERED TO SPECIFIED LOCATION, UNOPENED, PROPERLY PACKAGED, AND IN THEIR ORIGINAL CONDITION FROM THE MANUFACTURER.
6. DRAWINGS MAY NOT INDICATE EVERY CONNECTION OFFSET AND DETAIL THAT DOES NOT CHANGE THE SCOPE OF THE WORK. FOR ANY OTHER CHANGE OR MODIFICATION MADE IN INSTALLATION, CONSULT ARCHITECT AND MAKE NOTE OF CHANGE.
7. ALL COMPONENTS ARE TO BE PROPERLY ISOLATED/INSULATED FROM OTHER ELEMENTS BASED ON THE NEEDS CALLED OUT CONTEXT AND ENVIRONMENT.
8. CONTRACTOR IS TO PROVIDED CERTIFIED DOCUMENTATION OF COMPLETED AND PASSED QUALITY CONTROL TESTS OF ALL SYSTEMS.
9. DETAILS NOT SHOWN ARE SIMILAR IN CHARACTER AND DESIGN TO THOSE DETAILED.
10. DISSIMILAR METALS ARE TO BE ISOLATED FROM EACH OTHER WITH A PROPER MATERIAL TO PREVENT CHEMICAL REACTION/BREAKDOWN.
11. COORDINATE ALL WORK WITH STRUCTURAL, EXTERIOR, INSULATION, ELECTRICAL, MECHANICAL, AND FINISH WORK.
12. WHERE DISCREPANCIES EXIST BETWEEN DRAWINGS AND CONSTRUCTION TRADE PRACTICES, CONSULT ARCHITECT BEFORE PROCEEDING WITH WORK.
13. ALL WATER TANKS TO BE LOCATED A MINIMUM OF 3.5" ABOVE THE FINISHED GRADE.

TEAM NAME: TEAM MASSACHUSETTS

ADDRESS: MASSART 621 HUNTINGTON AVE. BOSTON MA 02115

CONTACT: SPENCER CULHANE 602.677.6388 SPENCER.CULHANE@4DHOME.US WWW.4DHOME.US

CONSULTANTS

EPOCH HOMES

PASSIVE HOUSE INSTITUTE US

SLADEN FEINSTEIN INTEGRATED LIGHTING

LEMESSURIER CONSULTANTS, STRUCTURAL ENGINEERS

CLIENT

U.S. DEPARTMENT OF ENERGY

SOLAR DECATHLON 2011

WWW.SOLARDECATHLON.GOV

MARK	DATE	DESCRIPTION

LOT NUMBER: NA

DRAWN BY: SC_FL_EC

CHECKED BY: PH

COPYRIGHT: NONE: PROJECT IS PUBLIC DOMAIN

SHEET TITLE

PLUMBING SYMBOLS AND NOTES

P-001

8/12/2011 9:01:54 PM

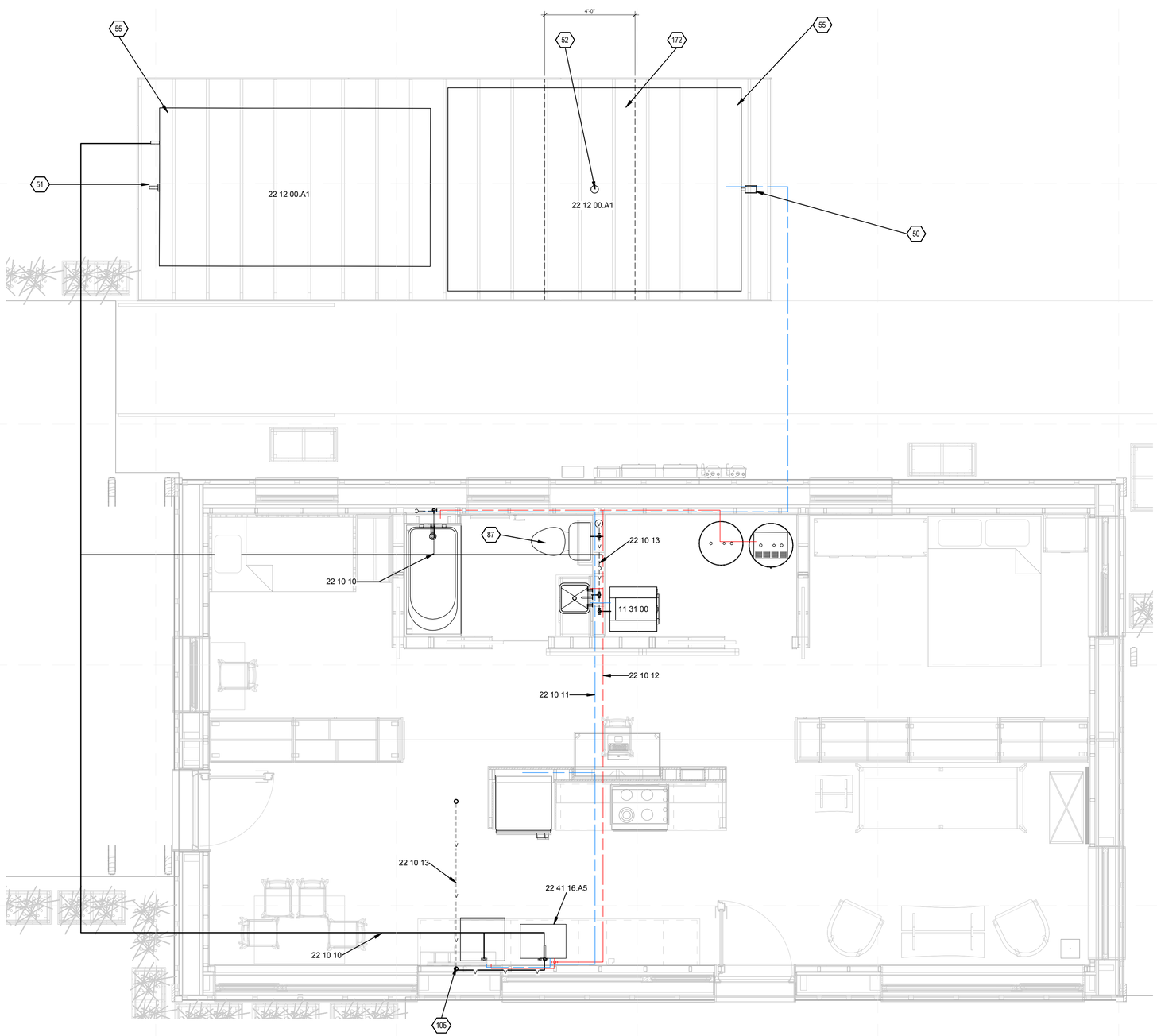

1 PLUMBING SITE PLAN
3/8" = 1'-0"

0 2' 4' 6'

GENERAL SHEET NOTES

1. THERE WILL BE NO TEAM PROVIDED LIQUIDS EXCLUDING POTABLE WATER AND SMALL QUANTITIES OF CLEANING SOLUTION.
2. ALL WATER TANKS ARE TO BE LOCATED A MINIMUM OF 3.5" ABOVE THE FINISHED GRADE.

REFERENCE KEYNOTES

11 31 00	RESIDENTIAL APPLIANCES
22 10 10	GREY WATER DRAIN LINE
22 10 11	DOMESTIC COLD WATER SUPPLY
22 10 12	DOMESTIC HOT WATER SUPPLY
22 10 13	DOMESTIC VENT
22 12 00.A1	WATER STORAGE TANK
22 41 16.A5	UNDER COUNTER SINK

SHEET KEYNOTES

50	REMAINING SUPPLY WATER REMOVAL POINT
51	WASTE WATER REMOVAL POINT
52	WATER DELIVERY POINT
55	TEMPORARY FOR COMPETITION PURPOSES
87	TOILET NOT PLUMBED FOR COMPETITION
105	CHASE WALL IS FURRED OUT WITH A 2X3, LEAVING 2 1/2" CAVITY. VENT KITCHEN THROUGH CAVITY UP ROOF ABOVE PV PANEL ARRAY
172	REMOVABLE PANEL FOR WATER DELIVERY

TEAM NAME: TEAM MASSACHUSETTS

ADDRESS: MASSART 621 HUNTINGTON AVE. BOSTON MA 02115

CONTACT: SPENCER CULHANE 602.677.6388 SPENCER.CULHANE@4DHOME.US WWW.4DHOME.US

CONSULTANTS

EPOCH HOMES

PASSIVE HOUSE INSTITUTE US

SLADEN FEINSTEIN INTEGRATED LIGHTING

LEMESSURIER CONSULTANTS, STRUCTURAL ENGINEERS

CLIENT

U.S. DEPARTMENT OF ENERGY

SOLAR DECATHLON 2011

WWW.SOLARDECATHLON.GOV

MARK	DATE	DESCRIPTION

LOT NUMBER:	NA
DRAWN BY:	EC
CHECKED BY:	PH
COPYRIGHT:	NONE: PROJECT IS PUBLIC DOMAIN

SHEET TITLE

PLUMBING DISTRIBUTION PLAN

P-101

8/12/2011 9:02:01 PM

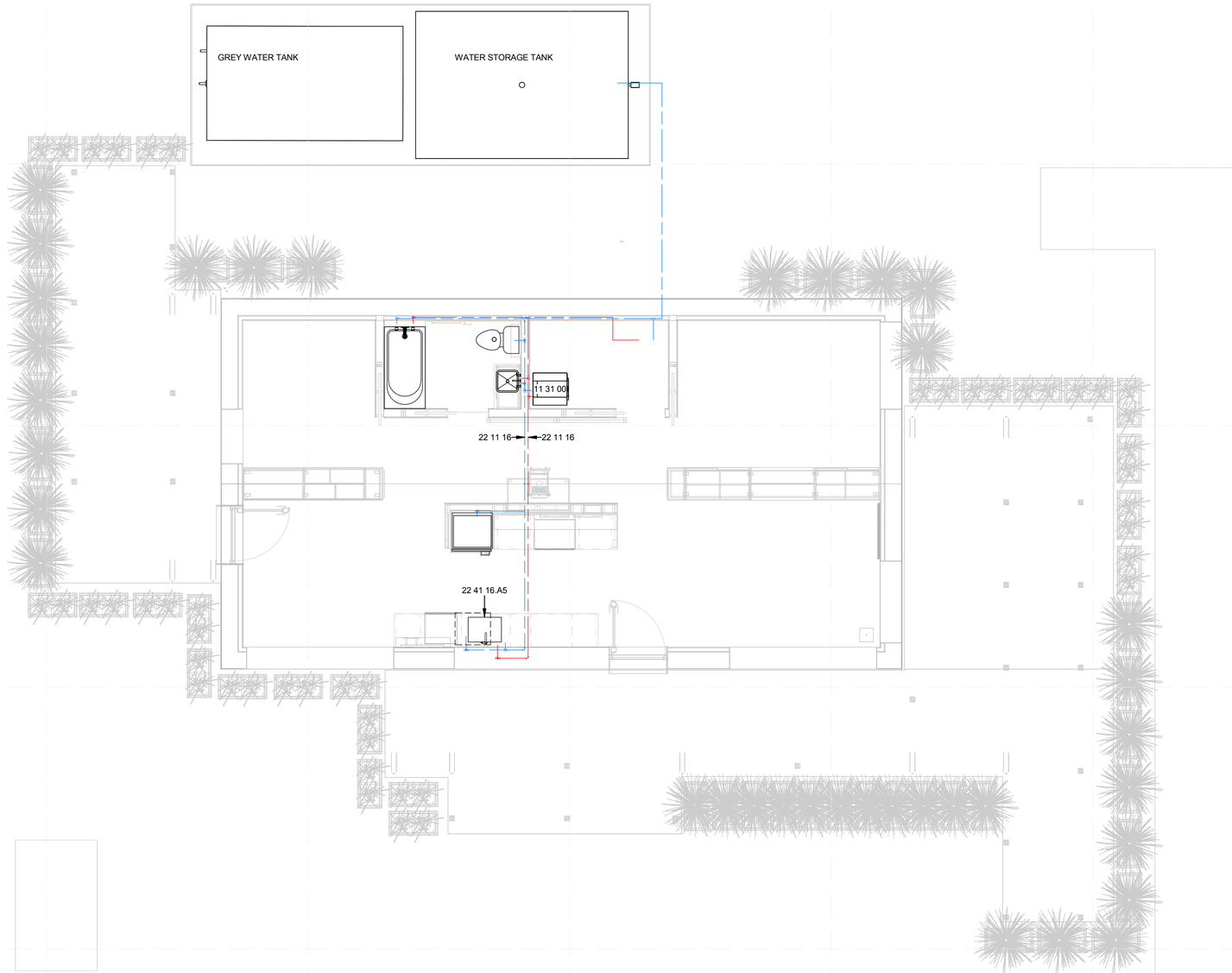

A1 PLUMBING DOMESTIC SUPPLY
1/4" = 1'-0"

0 2' 4' 8'

GENERAL SHEET NOTES

1. WATER TANK - MUST BE ELEVATED ABOVE THE GROUND BY 3.5 INCHES MINIMUM. 1,000 PSF (47.9 KPA) MINIMUM ELEVATED FOOTING (TANK ASSUMED TO BE AT FULL CAPACITY) [1,500 PSF (71.8 KPA) MAXIMUM] WINDOWS ARE DIMENSIONS TO CENTERLINE OF ROUGH OPENING.
2. THE PRIMARY SUPPLY WATER TANK(S) SHALL BE FULLY SHADED FROM DIRECT SOLAR RADIATION BETWEEN 9 A.M. AND 5 P.M. EDT OR BETWEEN 8 A.M. AND 4 P.M. SOLAR TIME ON OCTOBER

REFERENCE KEYNOTES

11 31 00	RESIDENTIAL APPLIANCES
22 11 16	DOMESTIC WATER PIPING
22 41 16.A5	UNDER COUNTER SINK

SHEET KEYNOTES

TEAM NAME: TEAM MASSACHUSETTS
ADDRESS: MASSART 621 HUNTINGTON AVE. BOSTON MA 02115
CONTACT: SPENCER CULHANE 602.677.6388 SPENCER.CULHANE@4DHOME.US WWW.4DHOME.US

CONSULTANTS

EPOCH HOMES

PASSIVE HOUSE INSTITUTE US

SLADEN FEINSTEIN INTEGRATED LIGHTING

LEMESSURIER CONSULTANTS, STRUCTURAL ENGINEERS

CLIENT

U.S. DEPARTMENT OF ENERGY

SOLAR DECATHLON 2011

WWW.SOLARDECATHLON.GOV

MARK	DATE	DESCRIPTION

LOT NUMBER:	NA
DRAWN BY:	EC
CHECKED BY:	PH
COPYRIGHT:	NONE: PROJECT IS PUBLIC DOMAIN

SHEET TITLE

DOMESTIC SUPPLY

P-102

8/12/2011 9:02:29 PM

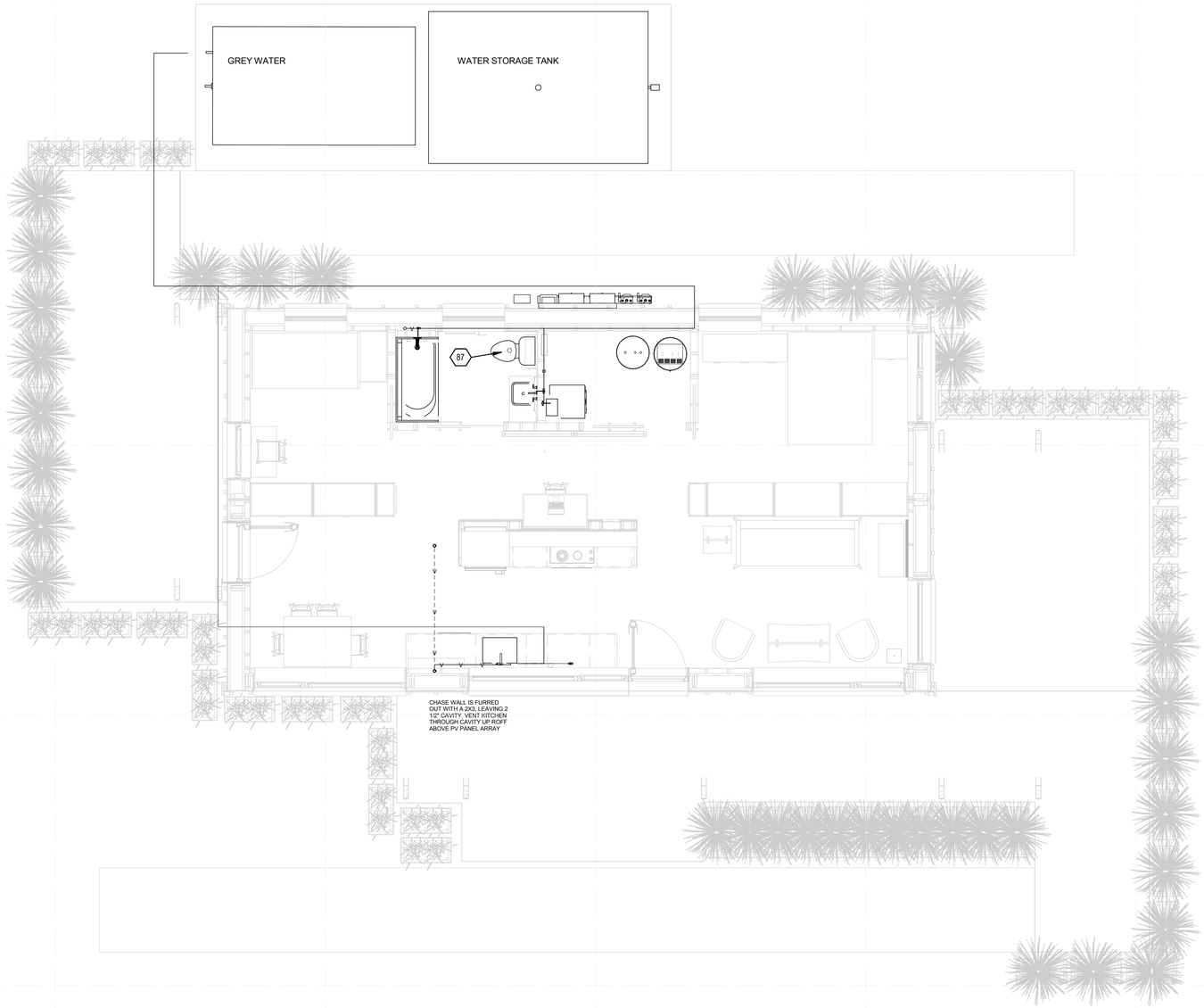

A1 DOMESTIC PLUMBING RETURN
1/4" = 1'-0"

0 2' 4' 8'

GENERAL SHEET NOTES

1. CHASE WALL IS FURRED OUT WITH A 2X3, LEAVING 2 1/2" CAVITY. VENT KITCHEN THROUGH CAVITY UP ROFF ABOVE PV PANEL ARRAY

REFERENCE KEYNOTES

SHEET KEYNOTES

87 TOILET NOT PLUMBED FOR COMPETITION

4D HOME

TEAM NAME: TEAM MASSACHUSETTS

ADDRESS: MASSART 621 HUNTINGTON AVE. BOSTON MA 02115

CONTACT: SPENCER CULHANE 602.677.6388 SPENCER.CULHANE@4DHOME.US WWW.4DHOME.US

CONSULTANTS

EPOCH HOMES

PASSIVE HOUSE INSTITUTE US

SLADEN FEINSTEIN INTEGRATED LIGHTING

LEMESSURIER CONSULTANTS, STRUCTURAL ENGINEERS

CLIENT

U.S. DEPARTMENT OF ENERGY

SOLAR DECATHLON 2011

WWW.SOLARDECATHLON.GOV

U.S. DEPARTMENT OF ENERGY SOLAR DECATHLON

MARK	DATE	DESCRIPTION

LOT NUMBER: NA

DRAWN BY: EC

CHECKED BY: PH

COPYRIGHT: NONE: PROJECT IS PUBLIC DOMAIN

SHEET TITLE

DOMESTIC RETURN

P-103

8/12/2011 9:03:13 PM

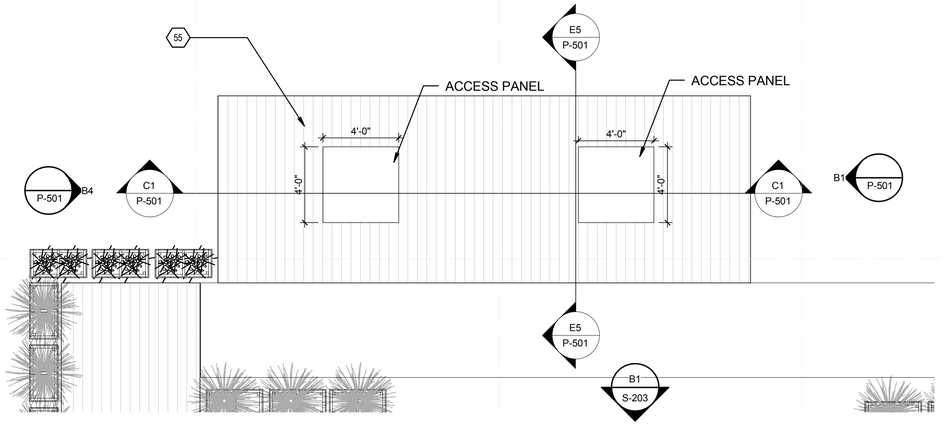

D1 Callout of SITE PLAN
1/4" = 1'-0"

0 2' 4' 8'

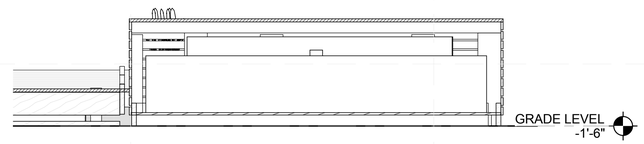

E5 WATER TANK TRANSVERSE SECTION
1/2" = 1'-0"

0 1' 2' 4'

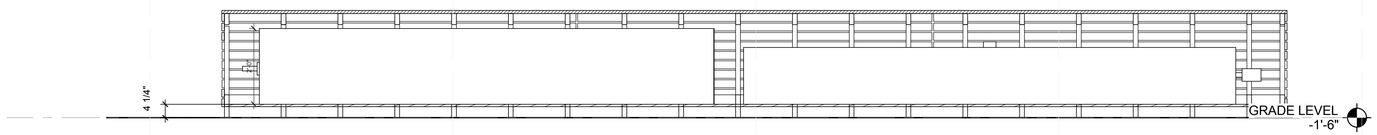

C1 WATER TANK LONGITUDINAL SECTION
1/2" = 1'-0"

0 1' 2' 4'

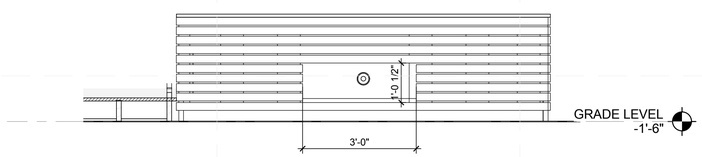

B1 WATER TANK ELEVATION EAST
1/2" = 1'-0"

0 1' 2' 4'

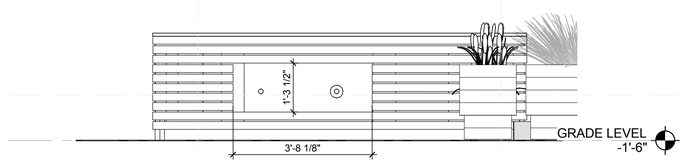

B4 WATER TANK ELEVATION WEST
1/2" = 1'-0"

0 1' 2' 4'

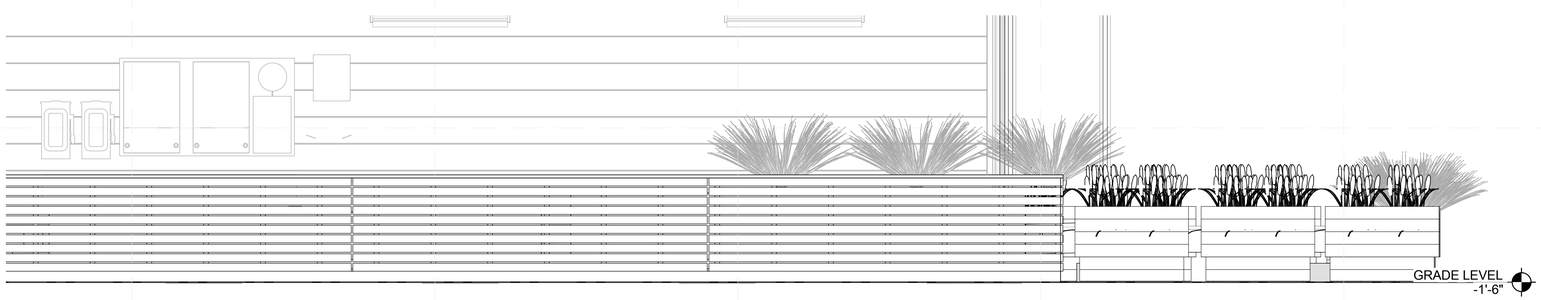

A1 WATER TANK ELEVATION NORTH
1/2" = 1'-0"

0 1' 2' 4'

GENERAL SHEET NOTES

1. WATER TANK ENCLOSURE SHALL FULLY SHADE TANKS FROM 8AM TO 5PM.
2. ALL WATER TANKS TO BE LOCATED A MINIMUM OF 3.5" ABOVE THE FINISHED GRADE.

REFERENCE KEYNOTES

SHEET KEYNOTES

55	TEMPORARY FOR COMPETITION PURPOSES

TEAM NAME: TEAM MASSACHUSETTS
ADDRESS: MASSART 621 HUNTINGTON AVE. BOSTON MA 02115
CONTACT: SPENCER CULHANE 602.677.6388 SPENCER.CULHANE@4DHOME.US WWW.4DHOME.US

CONSULTANTS

EPOCH HOMES
PASSIVE HOUSE INSTITUTE US
SLADEN FEINSTEIN INTEGRATED LIGHTING
LEMESSURIER CONSULTANTS, STRUCTURAL ENGINEERS

CLIENT

U.S. DEPARTMENT OF ENERGY
SOLAR DECATHLON 2011
WWW.SOLARDECATHLON.GOV

MARK	DATE	DESCRIPTION

LOT NUMBER:	NA
DRAWN BY:	EC
CHECKED BY:	PH
COPYRIGHT:	NONE: PROJECT IS PUBLIC DOMAIN

SHEET TITLE

WATER TANK ENCLOSURE DETAILS

P-501

8/12/2011 9:03:40 PM

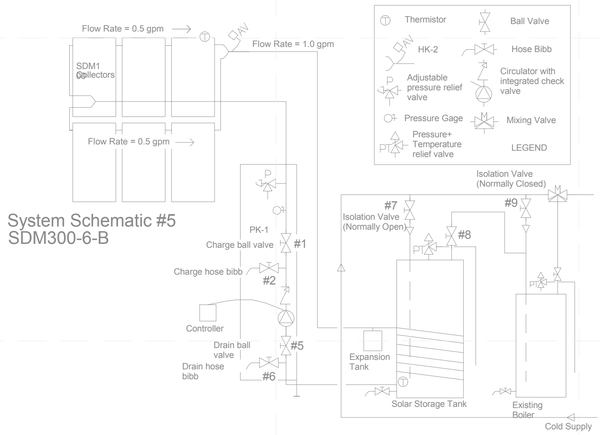

C1 SOLAR WATER DIAGRAM
NTS

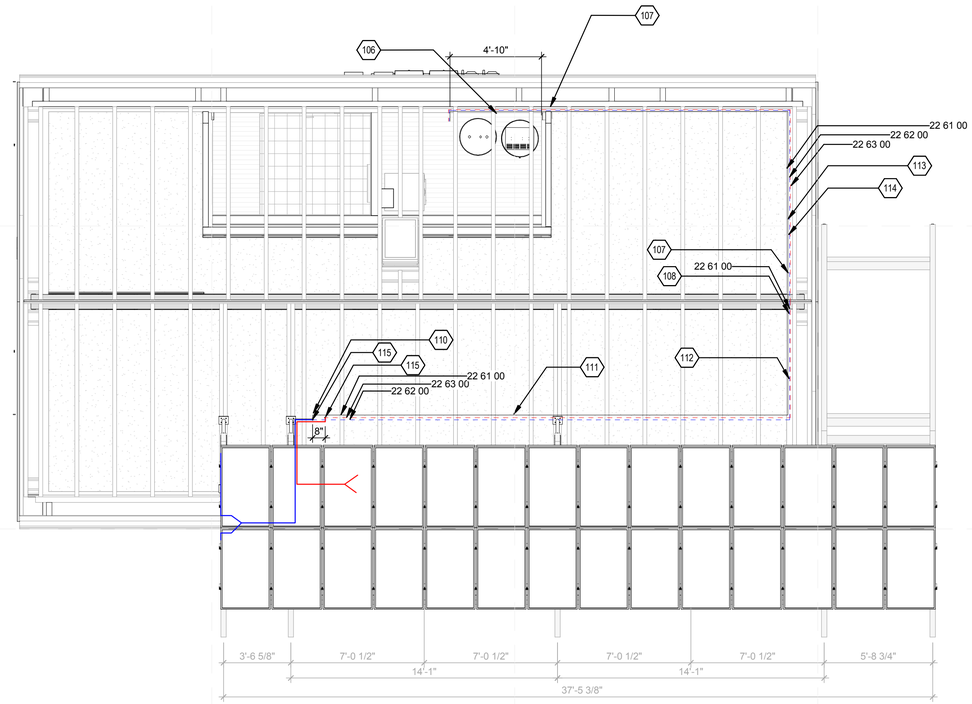

C3 SOLAR THERMAL LAYOUT
1/4" = 1'-0"

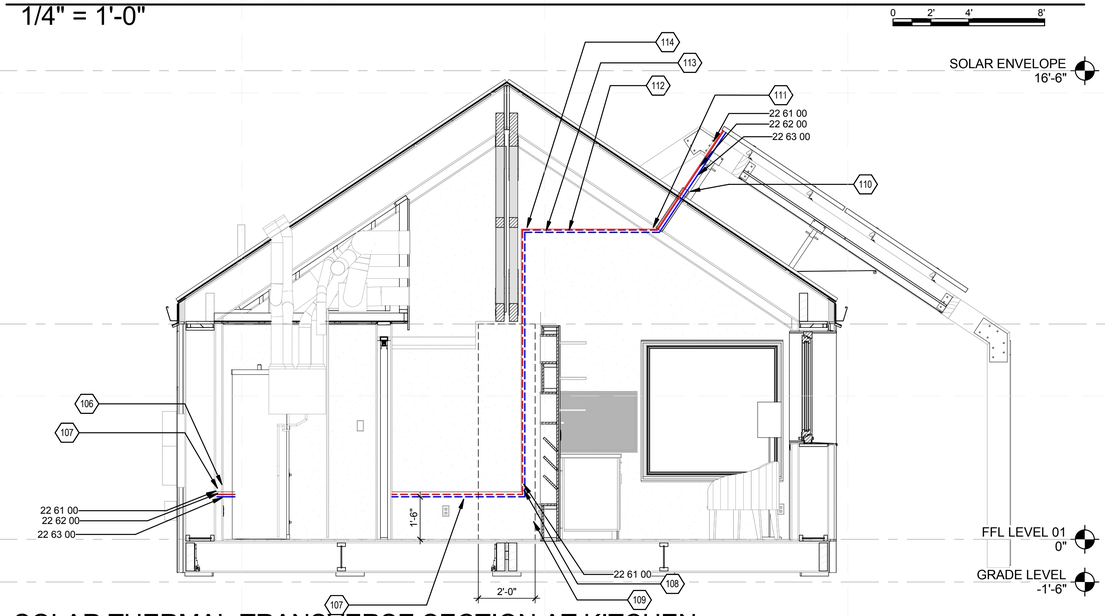

A3 SOLAR THERMAL-TRANSVERSE SECTION AT KITCHEN
3/8" = 1'-0"

GENERAL SHEET NOTES

1. SOLAR THERMAL LOOP MUST BE RUN USING HEPEX TUBING.
2. TUBING HAS TO BE INSULATED WITH 1/2" PIPE INSULATION.
3. AQUA-PEX TUBING CAN NOT BE USED.
4. SUPPLY (HOT) SHOULD BE ABOVE RETURN (COLD) TO AVOID CROSSING AND SIMPLIFY AIR PURGE

REFERENCE KEYNOTES

22 61 00	THERMISTOR SENSOR WIRE, AWG 18/2
22 62 00	SOLAR THERMAL RETURN
22 63 00	SOLAR THERMAL SUPPLY

SHEET KEYNOTES

106	LOCATION OF PUMPING STATION
107	SOLAR THERMAL THROUGH BASE MODULE CHASE WALL. 16"-18" ABOVE FINISHED FLOOR
108	CONNECTION AT MODULE BREAK
109	2' REMOVABLE PANEL AT GABLE ENDS
110	SOLAR THERMAL ROOF CONNECTIONS
111	SOLAR THERMAL THROUGH SOUTH CHASE CEILING
112	SOLAR THERMAL THROUGH EAST GABLE END ROOF MODULE WALL
113	SOLAR THERMAL LOOP MUST BE RUN USING HEPEX TUBING
114	TUBING MUST BE INSULATED WITH 1/2" PIPE INSULATION
115	SOLAR THERMAL 5/8" CONDUIT PENETRATION

TEAM NAME: TEAM MASSACHUSETTS
ADDRESS: MASSART 621 HUNTINGTON AVE. BOSTON MA 02115
CONTACT: SPENCER CULHANE 602.677.6388 SPENCER.CULHANE@4DHOME.US WWW.4DHOME.US

CONSULTANTS

EPOCH HOMES

PASSIVE HOUSE INSTITUTE US

SLADEN FEINSTEIN INTEGRATED LIGHTING

LEMESSURIER CONSULTANTS, STRUCTURAL ENGINEERS

CLIENT

U.S. DEPARTMENT OF ENERGY

SOLAR DECATHLON 2011

WWW.SOLARDECATHLON.GOV

MARK	DATE	DESCRIPTION

LOT NUMBER:	NA
DRAWN BY:	FL
CHECKED BY:	-
COPYRIGHT:	NONE: PROJECT IS PUBLIC DOMAIN

SHEET TITLE

SOLAR THERMAL

P-701

8/12/2011 9:03:51 PM

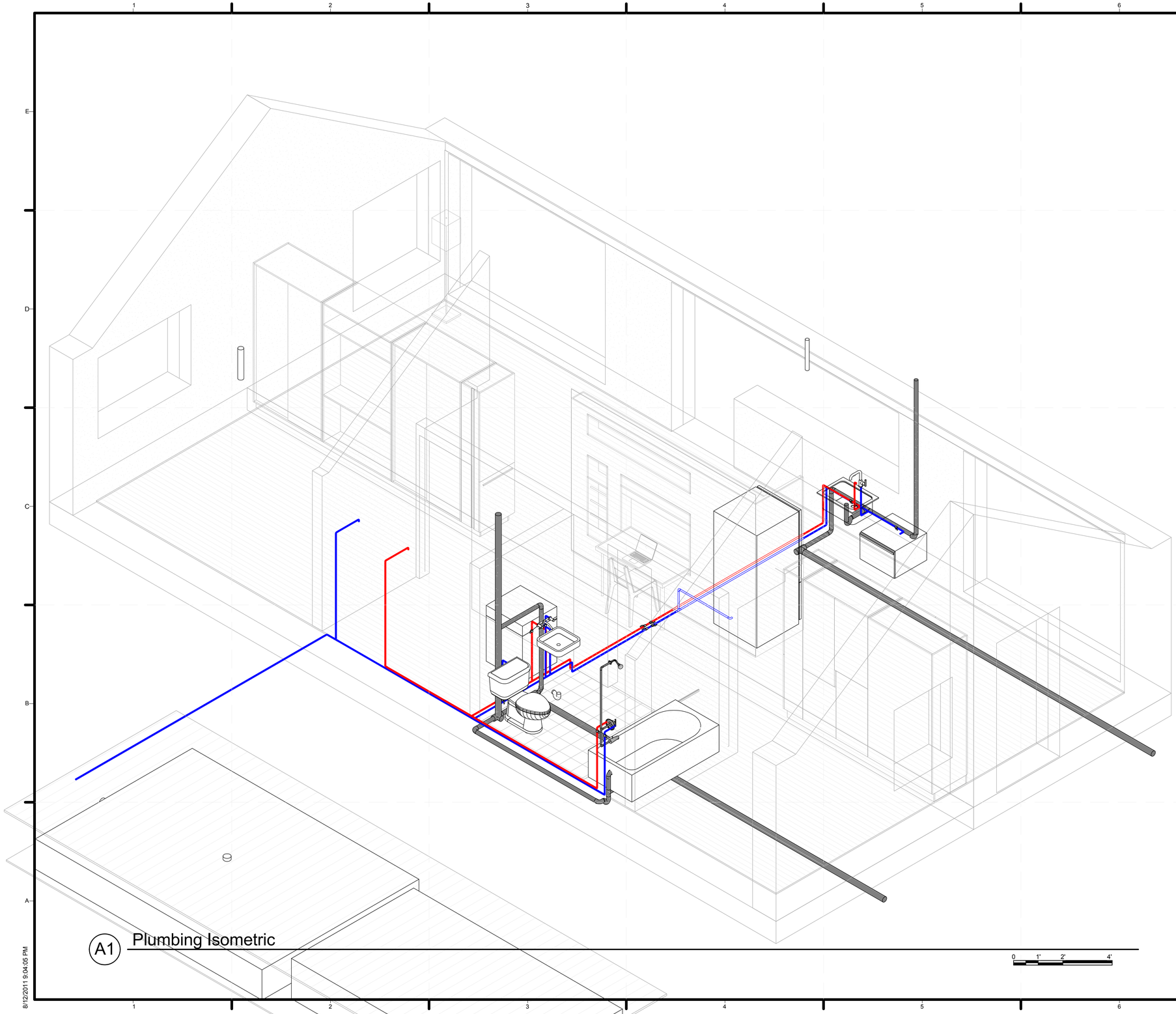

A1 Plumbing Isometric

0 1' 2' 4'

8/12/2011 9:04:05 PM

GENERAL SHEET NOTES

REFERENCE KEYNOTES

SHEET KEYNOTES

4D HOME

TEAM NAME: TEAM MASSACHUSETTS

ADDRESS: MASSART 621 HUNTINGTON AVE. BOSTON MA 02115

CONTACT: SPENCER CULHANE 602.677.6388 SPENCER.CULHANE@4DHOME.US WWW.4DHOME.US

CONSULTANTS

EPOCH HOMES

PASSIVE HOUSE INSTITUTE US

SLADEN FEINSTEIN INTEGRATED LIGHTING

LEMESSURIER CONSULTANTS, STRUCTURAL ENGINEERS

CLIENT

U.S. DEPARTMENT OF ENERGY

SOLAR DECATHLON 2011

WWW.SOLARDECATHLON.GOV

U.S. DEPARTMENT OF ENERGY SOLAR DECATHLON

MARK	DATE	DESCRIPTION

LOT NUMBER: NA

DRAWN BY: Author

CHECKED BY: Checker

COPYRIGHT: NONE: PROJECT IS PUBLIC DOMAIN

SHEET TITLE

PLUMBING ISOMETRIC

P-901

PLUMBING FIXTURE SCHEDULE

MARK	DESCRIPTION	COUNT	MANUFACTURER	MODEL	SUPPLY FITTING	SUPPLY PIPE	DRAIN	TRAP	CONNECTION				COMMENTS
									CW	HW	WASTE	VENT	
		2											
27	"ADVANTAGE" Bath Tub	1	STERLING	61030110	N/A	1/2" COPPER PIPE			No	No	Yes	Yes	
1	"CINCH" Kitchen Sink "CINCH" Inset Kitchen Sink	1	STERLING	11722	N/A	1/2" COPPER PIPE			No	No	Yes	Yes	
13	"CORALAIS" Tub/Shower Faucet	1	KOHLER	K-T15603-4S-CP	1/2" CC CONECTIONS	1/2" COPPER PIPE	N/A	N/A	Yes	Yes	No	No	
	2" WASTE PIPE	9	TBD	TBD									
	3/4" PIPE TRAP	4	TBD	TBD									
28	ACRYLUX 60" x 32" Bath Wall Set	1	AMERICAN STANDARD	6032Y1.BW					No	No	No	No	
	BALL VALVE	14	TBD	TBD					No	No	No	No	
	ELBOW FITTING	2											
	ELBOW FITTING	42	TBD	TBD									
23	LOW CONSUMPTION TOILET	1	STERLING	CST715					Yes	No	Yes	Yes	
	PEX PIPE	57	PEX	TBD									
25	Purist(R) pull-out kitchen sink faucet with 7inch spout reach	1	Kohler	K-7506					Yes	Yes	No	No	
30	PURIST(R) WALL MOUNTED BATHROOM FAUCET	1	Kohler	K-T14412-4-CP					Yes	Yes	No	No	
	SUPPLY WATER TANK	1	GO-TO TANKS	950-026500									
	TEE FITTING	4											
	TEE FITTING	13	TBD	TBD									
12	VESSEL SINK	1	KOHLER	K-2661	N/A	1/2" COPPER PIPE							
	WASTE PIPE	9	TBD	TBD									
24	WASTE WATER TANK	1	DQE	HM1000B	GARDEN HOSE FITTING	GARDEN HOSE	1/2" BALL VALVE	N/A	No	No	Yes	No	

8/12/2011 9:04:11 PM

TEAM NAME: TEAM MASSACHUSETTS

ADDRESS: MASSART 621 HUNTINGTON AVE. BOSTON MA 02115

CONTACT: SPENCER CULHANE 602.677.6388 SPENCER.CULHANE@4DHOME.US WWW.4DHOME.US

CONSULTANTS

EPOCH HOMES

PASSIVE HOUSE INSTITUTE US

SLADEN FEINSTEIN INTEGRATED LIGHTING

LEMESSURIER CONSULTANTS, STRUCTURAL ENGINEERS

CLIENT

U.S. DEPARTMENT OF ENERGY

SOLAR DECATHLON 2011

WWW.SOLARDECATHLON.GOV

MARK	DATE	DESCRIPTION

LOT NUMBER: NA

DRAWN BY: EC

CHECKED BY: PH

COPYRIGHT: NONE: PROJECT IS PUBLIC DOMAIN

SHEET TITLE

SCHEDULES

P-902

GENERAL MECHANICAL NOTES

1. REFER TO DESIGN DRAWINGS, DETAILS, SPECIFICATIONS, AND STANDARDS.
2. DO NOT SCALE OR REPLICATE/REINTERPRET DRAWINGS. IN CASE OF QUESTION, CONSULT ARCHITECT.
3. CONTRACTOR IS TO PROVIDE THE SERVICES NECESSARY TO COMPLETE THE CERTIFIED AND PROPER INSTALLATION OF SPECIFIED MECHANICAL/HVAC SYSTEMS AND ENSURE ITS PROPER COMPLETION.
4. ALL WORK IS TO COMPLY WITH APPROPRIATE BUILDING CODES, AND QUALITY CERTIFICATIONS SPECIFIED BY SOLAR DECATHLON CODE AND DESIGN SPECIFICATIONS.
5. ALL COMPONENTS ARE TO BE DELIVERED TO SPECIFIED LOCATION, UNOPENED, PROPERLY PACKAGED, AND IN THEIR ORIGINAL CONDITION FROM THE MANUFACTURER.
6. DRAWINGS MAY NOT INDICATE EVERY CONNECTION OFFSET AND DETAIL THAT DOES NOT CHANGE THE SCOPE OF THE WORK. FOR ANY OTHER CHANGE OR MODIFICATION MADE IN INSTALLATION, CONSULT ARCHITECT AND MAKE NOTE OF CHANGE.
7. ALL COMPONENTS ARE TO BE PROPERLY ISOLATED/INSULATED FROM OTHER ELEMENTS BASED ON THE NEEDS CALLED OUT CONTEXT AND ENVIRONMENT.
8. CONTRACTOR IS TO PROVIDED CERTIFIED DOCUMENTATION OF COMPLETED AND PASSED QUALITY CONTROL TESTS OF ALL SYSTEMS.
9. DETAILS NOT SHOWN ARE SIMILAR IN CHARACTER AND DESIGN TO THOSE DETAILED.
10. DISSIMILAR METALS ARE TO BE ISOLATED FROM EACH OTHER WITH A PROPER MATERIAL TO PREVENT CHEMICAL REACTION/BREAKDOWN.
11. COORDINATE ALL WORK WITH STRUCTURAL, EXTERIOR, INSULATION, ELECTRICAL, PLUMBING, AND FINISH WORK.
12. WHERE DISCREPANCIES EXIST BETWEEN DRAWINGS AND CONSTRUCTION TRADE PRACTICES, CONSULT ARCHITECT BEFORE PROCEEDING WITH WORK.

MECHANICAL
SOLAR DECATHLON
CONSTRUCTION DOCUMENTS

TEAM NAME: TEAM MASSACHUSETTS

ADDRESS: MASSART 621 HUNTINGTON AVE. BOSTON MA 02115

CONTACT: SPENCER CULHANE 602.677.6388 SPENCER.CULHANE@4DHOME.US WWW.4DHOME.US

CONSULTANTS

EPOCH HOMES

PASSIVE HOUSE INSTITUTE US

SLADEN FEINSTEIN INTEGRATED LIGHTING

LEMESSURIER CONSULTANTS, STRUCTURAL ENGINEERS

CLIENT

U.S. DEPARTMENT OF ENERGY

SOLAR DECATHLON 2011

WWW.SOLARDECATHLON.GOV

MARK	DATE	DESCRIPTION

LOT NUMBER: NA

DRAWN BY: SC_FL_EC

CHECKED BY: PH

COPYRIGHT: NONE: PROJECT IS PUBLIC DOMAIN

SHEET TITLE

MECHANICAL SYMBOLS AND NOTES

M-001

8/12/2011 8:39:20 PM

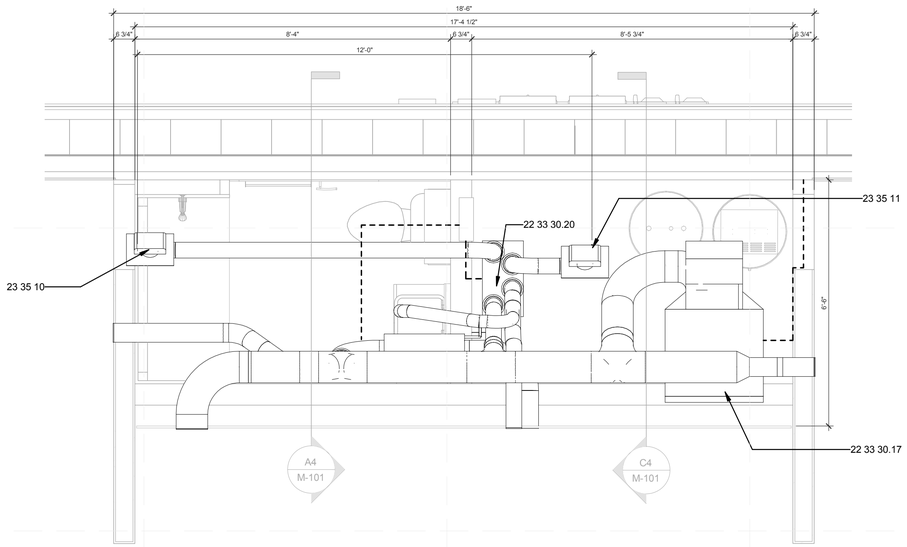

C1 HVAC PLAN
1/2" = 1'-0"

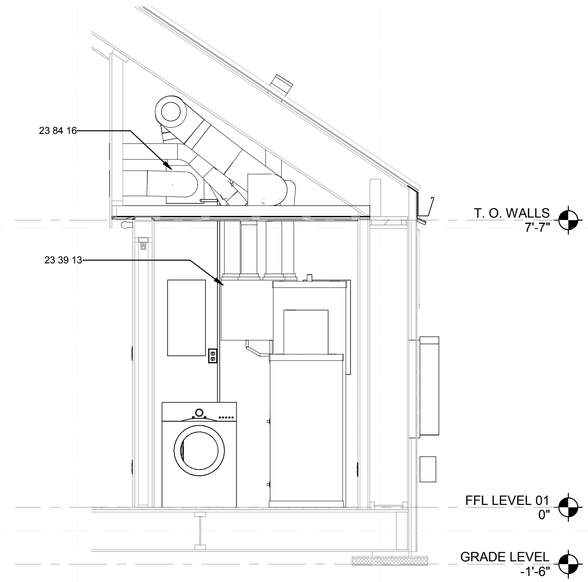

C4 HVAC SECTION AT MECH ROOM
1/2" = 1'-0"

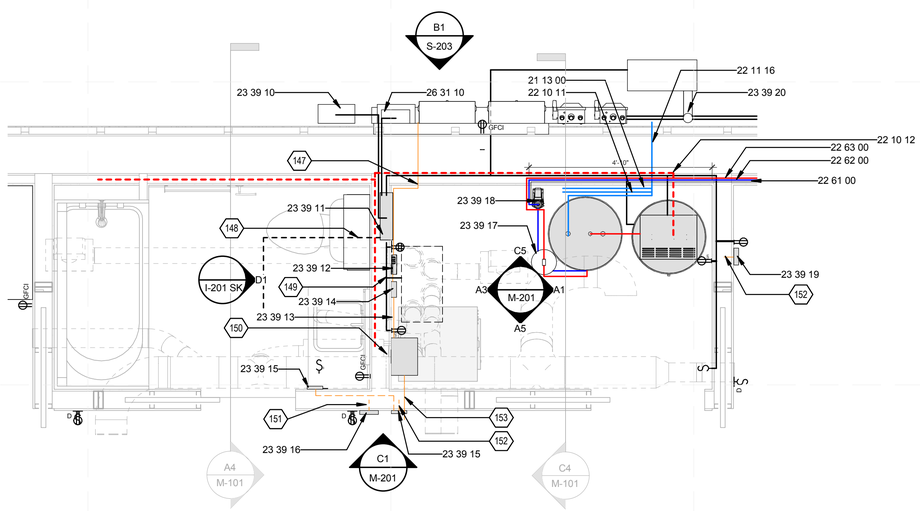

A1 HVAC MECH ROOM PLAN
1/2" = 1'-0"

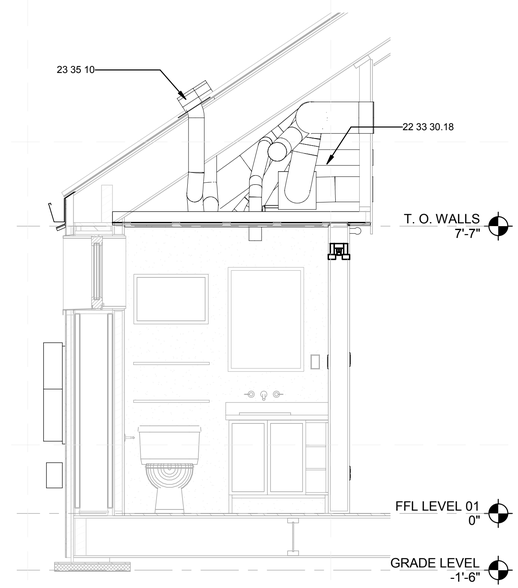

A4 HVAC SECTION AT BATHROOM
1/2" = 1'-0"

GENERAL SHEET NOTES

REFERENCE KEYNOTES

21 13 00	FIRE-SUPPRESSION SPRINKLER SYSTEMS
22 10 11	DOMESTIC COLD WATER SUPPLY
22 10 12	DOMESTIC HOT WATER SUPPLY
22 11 16	DOMESTIC WATER PIPING
22 33 30.17	HEAT PUMP
22 33 30.18	DEHUMIDIFIER
22 33 30.20	HRV
22 61 00	THERMISTOR SENSOR WIRE, AWG 18/2
22 62 00	SOLAR THERMAL RETURN
22 63 00	SOLAR THERMAL SUPPLY
23 35 10	AIR EXHAUST
23 35 11	AIR INTAKE
23 39 10	SERVICE METER
23 39 11	LOAD CENTER
23 39 12	SOLRENVIEW + EMONITOR
23 39 13	HRV
23 39 14	ROUTER
23 39 15	HRV SWITCH
23 39 16	DEHUMIDISTAT
23 39 17	EXPANSION TANK
23 39 18	PUMP STATION
23 39 19	CO2 SENSOR
23 39 20	MAGNESIUM ANODE
23 84 16	DEHUMIDIFIERS
26 31 10	PV METER

SHEET KEYNOTES

147	DATA
148	POWER TO DEHUMIDIFIER IN CEILING
149	POWER TO HRV
150	ORGANIZER PANEL
151	UP TO DEHUMIDIFIER
152	TO HRV
153	TO DATALOGGER ENCLOSURE IN KITCHEN

TEAM NAME: TEAM MASSACHUSETTS
ADDRESS: MASSART 621 HUNTINGTON AVE. BOSTON MA 02115
CONTACT: SPENCER CULHANE 602.677.6388 SPENCER.CULHANE@4DHOME.US WWW.4DHOME.US

CONSULTANTS

EPOCH HOMES

PASSIVE HOUSE INSTITUTE US

SLADEN FEINSTEIN INTEGRATED LIGHTING

LEMESSURIER CONSULTANTS, STRUCTURAL ENGINEERS

CLIENT

U.S. DEPARTMENT OF ENERGY

SOLAR DECATHLON 2011

WWW.SOLARDECATHLON.GOV

MARK	DATE	DESCRIPTION

LOT NUMBER:	NA
DRAWN BY:	FL
CHECKED BY:	PH
COPYRIGHT:	NONE: PROJECT IS PUBLIC DOMAIN

SHEET TITLE

HVAC EQUIPMENT AND DISTRIBUTION PLAN

M-101

8/12/2011 8:59:28 PM

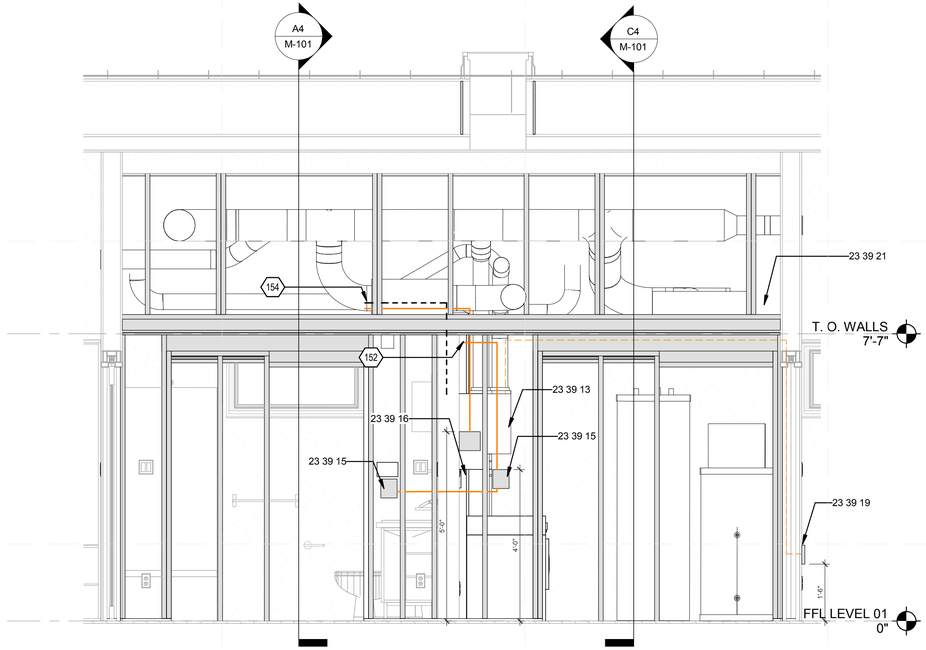

C1 HVAC ELEVATION
1/2" = 1'-0"

0 1' 2' 4'

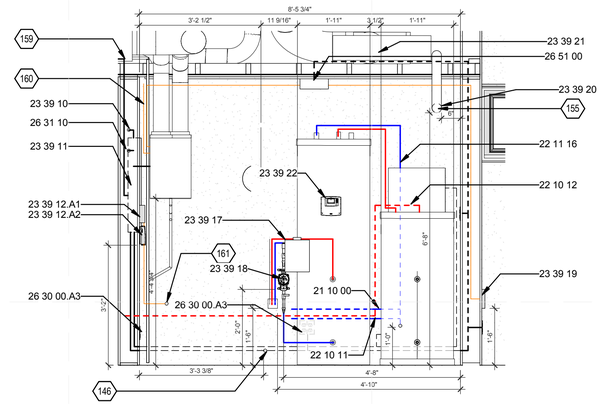

C5 MECH ROOM NORTH ELEVATION
1/2" = 1'-0"

0 1' 2' 4'

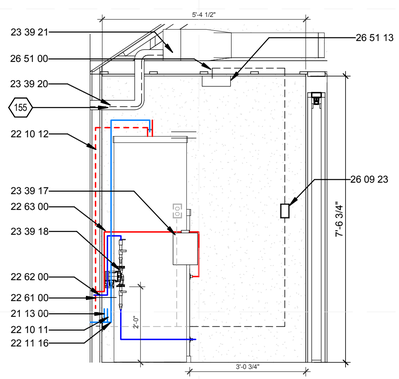

A1 MECH ROOM EAST ELEVATION
1/2" = 1'-0"

0 1' 2' 4'

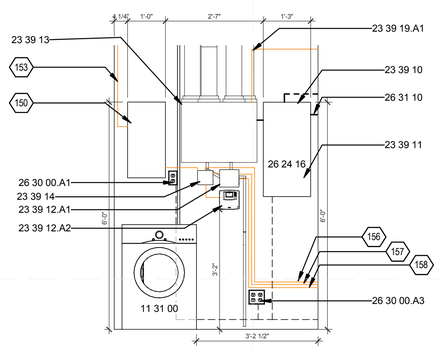

A3 MECH ROOM WEST ELEVATION
1/2" = 1'-0"

0 1' 2' 4'

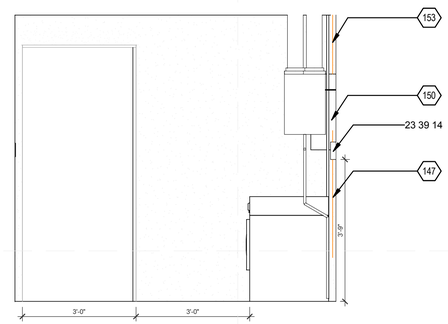

A5 MECH ROOM SOUTH ELEVATION
1/2" = 1'-0"

0 1' 2' 4'

GENERAL SHEET NOTES

REFERENCE KEYNOTES

11 31 00	RESIDENTIAL APPLIANCES
21 10 00	WATER-BASED FIRE-SUPPRESSION SYSTEMS
21 13 00	FIRE-SUPPRESSION SPRINKLER SYSTEMS
22 10 11	DOMESTIC COLD WATER SUPPLY
22 10 12	DOMESTIC HOT WATER SUPPLY
22 11 16	DOMESTIC WATER PIPING
22 61 00	THERMISTOR SENSOR WIRE, AWG 18/2
22 62 00	SOLAR THERMAL RETURN
22 63 00	SOLAR THERMAL SUPPLY
23 39 10	SERVICE METER
23 39 11	LOAD CENTER
23 39 12.A1	SOLRENVIEW
23 39 12.A2	EMONITOR
23 39 13	HRV
23 39 14	ROUTER
23 39 15	HRV SWITCH
23 39 16	DEHUMIDISTAT
23 39 17	EXPANSION TANK
23 39 18	PUMP STATION
23 39 19	CO2 SENSOR
23 39 19.A1	CO2 SENSOR WIRE
23 39 20	MR SLIM 3" CONDUIT
23 39 21	MR SLIM HEAT PUMP
23 39 22	STECA CONTROLLER
26 09 23	LIGHTING CONTROL DEVICES
26 24 16	PANEL BOARDS
26 30 00.A1	DUPLEX RECEPTACLE
26 30 00.A3	120/240V 3 WIRE RECEPTACLE
26 31 10	PV METER
26 51 00	INTERIOR LIGHTING
26 51 13	1001LEDEM LYTECASTER, 5" , LED EM, NON-IC, FIK

SHEET KEYNOTES

146	MR SLIM + 2 WATER PUMPS, EXTERIOR JUNCTION BOX- THREE CONNECTIONS
147	DATA
150	ORGANIZER PANEL
152	TO HRV
153	TO DATALOGGER ENCLOSURE IN KITCHEN
154	TO LOAD CENTER
155	HTF SUPPLY & RETURN
156	DOE DATA
157	INVERTER DATA
158	PV METER DATA
159	TO DEHUMIDIFIER
160	TO HRV HALLWAY SWITCH
161	DATA PENETRATION

TEAM NAME: TEAM MASSACHUSETTS
ADDRESS: MASSART 621 HUNTINGTON AVE. BOSTON MA 02115
CONTACT: SPENCER CULHANE 602.677.6388 SPENCER.CULHANE@4DHOME.US WWW.4DHOME.US

CONSULTANTS
EPOCH HOMES
PASSIVE HOUSE INSTITUTE US
SLADEN FEINSTEIN INTEGRATED LIGHTING
LEMESSURIER CONSULTANTS, STRUCTURAL ENGINEERS

CLIENT
U.S. DEPARTMENT OF ENERGY
SOLAR DECATHLON 2011
WWW.SOLARDECATHLON.GOV

MARK	DATE	DESCRIPTION

LOT NUMBER:	NA
DRAWN BY:	FL
CHECKED BY:	PH
COPYRIGHT:	NONE: PROJECT IS PUBLIC DOMAIN

SHEET TITLE
MECHANICAL ELEVATIONS

M-201

8/12/2011 8:59:40 PM

HVAC EQUIPMENT SCHEDULE

COMPONENT	MANUFACTURER	MAKE/MODEL #	DIMENSIONS	WEIGHT [LB]	COLLAR SIZE	NOTES
HRV	NU-AIR	ES 100	19.0625'' X 24'' X 13''	45	5'' ROUND	84 WATTS. POLYESTER AIR FILTER. 3/4" DRAINS.
INDOOR HEAT PUMP UNIT	MITSUBISHI	MR. SLIM /SEZKD09NA	31.125'' X 27.5625'' X 7.875''	42		CONCEALED CEILING UNIT, 15 SEER, 10 HSPF, 9,000 BTU
OUTDOOR HEAT PUMP UNIT	MITSUBISHI	MR. SLIM /SUZKA09NA	31.5'' X 11.25'' X 21.625''	66		OUTDOOR CONDENSING UNIT
DEHUMIDIFIER	HONEYWELL	TRUEDRY DR65	28.5'' X 12'' X 12''	55	8'' ROUND	

DUCT SCHEDULE: DUCTWORK & ACCESSORIES

COMPONENT	MANUFACTURER / DISTRIBUTOR	MAKE / MODEL #	SIZE
DUCTWORK			
RIGID DUCTWORK	SUPPLY HOUSE		4", 5", 6", 8", 10"
FLEXIBLE DUCTWORK	SUPPLY HOUSE		4", 5", 6", 8", 10"
FITTINGS			
REDUCER	SUPPLY HOUSE		10"/6", 6"/5"
30 DEGREE ELBOW	SUPPLY HOUSE		4", 5"
45 DEGREE ELBOW	SUPPLY HOUSE		4", 5", 6", 10"
60 DEGREE ELBOW	SUPPLY HOUSE		4", 5"
90 DEGREE ELBOW	SUPPLY HOUSE		4", 5", 8", 10"
MITRED 90 DEGREE ELBOW, W/ VANES	SUPPLY HOUSE		8", 10"
TEE WYE ADAPTER (OR ANGLED SADDLE TAP)	SUPPLY HOUSE		5X5X4", 10X10X6''
CONICAL TEE	SUPPLY HOUSE		10X10X6", 10X10X8"
MITRED TEE, W/ VANES (OR EQUAL WYE 45 DEG.)	SUPPLY HOUSE		10X10X10"
EXTERIOR VENTS/HOODS			
ROOF VENT CAP, EXHAUST	LUXURY METALS	GALVANIZED	5"
ROOF VENT CAP, FRESH INTAKE	LUXURY METALS	GALVANIZED	5"
DAMPERS			
VOLUME DAMPER	FANTECH	IR 6, 10 (UPC # 63060, 63100)	6'', 10''
BACK DRAFT DAMPER	FANTECH	RSK 6, 8, 10 (UPC # 69060, 69080, 69100)	6'', 8'', 10''
ADJUSTABLE BACKDRAFT DAMPER	HART & COOLEY	3800 SERIES	6'', 10''
DIFFUSERS/GRILLES			
EXHAUST GRILLE	FANTECH	DG 4, UPC # 67940	4" DUCT, 4 7/8" OD
SUPPLY GRILLE	HART & COOLEY	CBPS	23 3/4" X 23 3/4", 10" DIAM. NECK
RETURN GRILLE	FANTECH	MGE SERIES	5", 8"
SUPPLY GRILLE	FANTECH	MGS SERIES	6"
MISCELLANEOUS			
COLLAR RING	HART & COOLEY	5400 SERIES	6", 8", 10"
MOUNTING CLAMPS	SUPPLY HOUSE		4", 5", 6", 8", 10"

TEAM NAME: TEAM MASSACHUSETTS
ADDRESS: MASSART 621 HUNTINGTON AVE. BOSTON MA 02115
CONTACT: SPENCER CULHANE 602.677.6388 SPENCER.CULHANE@4DHOME.US WWW.4DHOME.US

CONSULTANTS

EPOCH HOMES
PASSIVE HOUSE INSTITUTE US
SLADEN FEINSTEIN INTEGRATED LIGHTING
LEMESSURIER CONSULTANTS, STRUCTURAL ENGINEERS

CLIENT

U.S. DEPARTMENT OF ENERGY
SOLAR DECATHLON 2011
WWW.SOLARDECATHLON.GOV

U.S. DEPARTMENT OF ENERGY SOLAR DECATHLON

MARK	DATE	DESCRIPTION

LOT NUMBER: NA
DRAWN BY: SC
CHECKED BY: PH
COPYRIGHT: NONE: PROJECT IS PUBLIC DOMAIN

SHEET TITLE

SCHEDULES

M-601

8/12/2011 8:59:42 PM

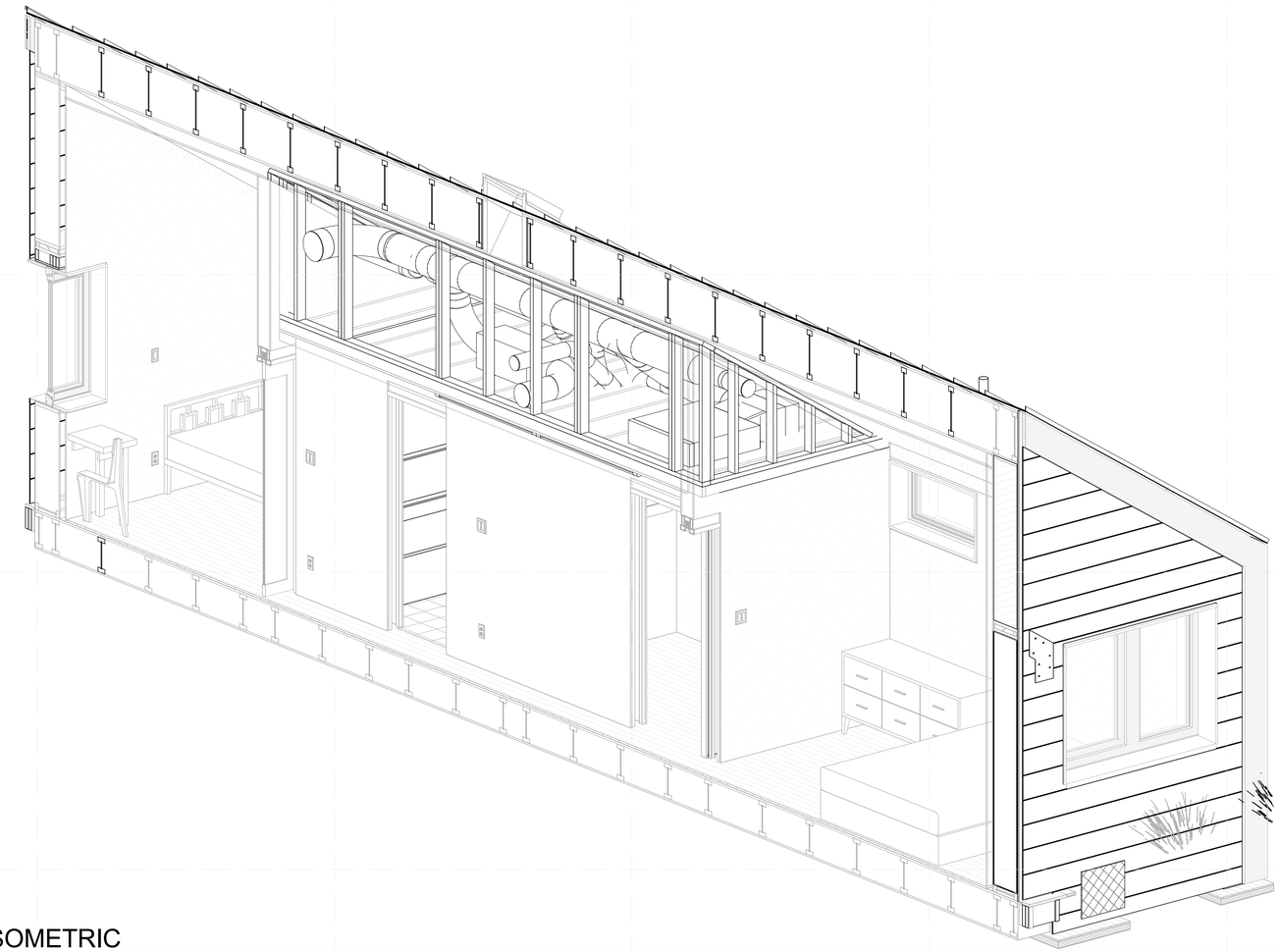

B1 HVAC ISOMETRIC

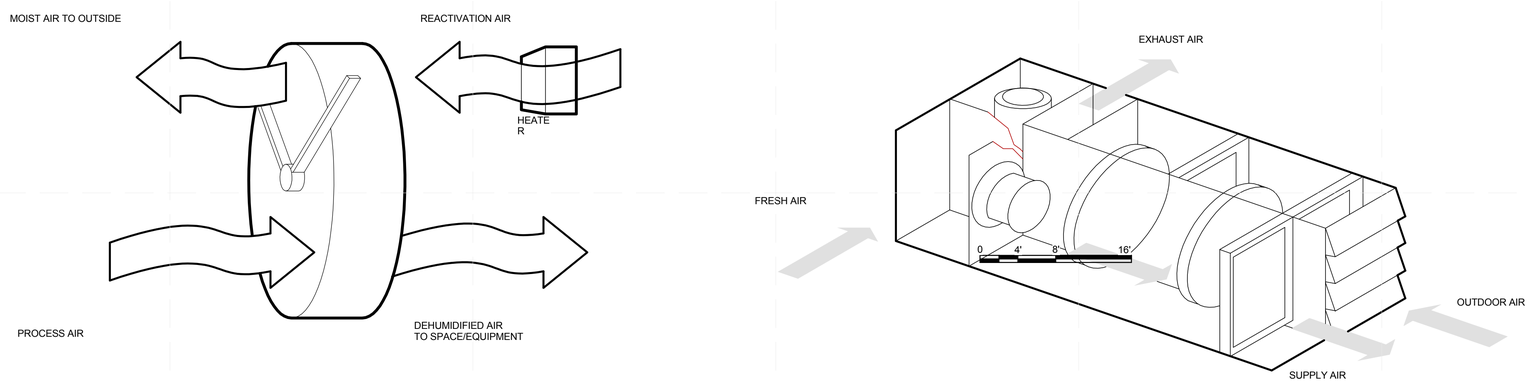

A1 DEHUMIDIFICATION DIAGRAMS
1/8" = 1'-0"

0 4' 8' 16'

GENERAL SHEET NOTES

1. ISOMETRIC DRAWING SHOWN FOR INFORMATIONAL PURPOSES ONLY. REFER TO DETAIL VIEWS AND PLANS FOR PLACEMENT, SYSTEMS AND INSTALLATION REQUIREMENTS.

REFERENCE KEYNOTES

SHEET KEYNOTES

4D HOME

TEAM NAME: TEAM MASSACHUSETTS
ADDRESS: MASSART 621 HUNTINGTON AVE. BOSTON MA 02115
CONTACT: SPENCER CULHANE 602.677.6388 SPENCER.CULHANE@4DHOME.US WWW.4DHOME.US

CONSULTANTS

EPOCH HOMES

PASSIVE HOUSE INSTITUTE US

SLADEN FEINSTEIN INTEGRATED LIGHTING

LEMESSURIER CONSULTANTS, STRUCTURAL ENGINEERS

CLIENT

U.S. DEPARTMENT OF ENERGY

SOLAR DECATHLON 2011

WWW.SOLARDECATHLON.GOV

U.S. DEPARTMENT OF ENERGY SOLAR DECATHLON

MARK	DATE	DESCRIPTION

LOT NUMBER: NA
DRAWN BY: SC
CHECKED BY: PH
COPYRIGHT: NONE: PROJECT IS PUBLIC DOMAIN

SHEET TITLE

HVAC DIAGRAMS

M-602

8/12/2011 8:59:50 PM

SYMBOLS

	DUPLEX RECEPTACLE
	QUADRUPLEX RECEPTACLE OUTLET
	GFI DUPLEX RECEPTACLE OUTLET
	SINGLE SPECIAL PURPOSE RECEPTACLE OUTLET
	SWITCH AND DOUBLE RECPTACLE
	SWITCH SINGLE
	SWITCH DOUBLE
	SWITCH THREE WAY
	6" INCANDESCENT
	FLUORESCENT

GENERAL ELECTRICAL NOTES

1. CONTRACTOR SHALL REFER TO ALL BUILDING CODES, SPECIFICATIONS, AND TRADE STANDARDS.
2. MATERIALS AND EQUIPMENT SHALL BE RATED AND APPROPRIATE FOR THE SITUATIONS AND ENVIRONMENTS THEY ARE TO BE USED AND INSTALLED.
3. LIGHT SWITCHES/DIMMERS ARE TO BE INSTALLED 48" OFF FINISH FLOOR TO CENTERLINE OF DEVICE UNLESS OTHERWISE SPECIFIED.
4. RECEPTACLES/OUTLETS ARE TO BE INSTALLED 18" OFF FINISH FLOOR TO CENTERLINE OF DEVICE, UNLESS ABOVE COUNTERTOP/WORKSPACE, WHERE THE DEVICE WILL BE INSTALLED 6" ABOVE BACKSPLASH, OR OTHERWISE SPECIFIED.
5. ALL CONDUITS AND WIRES ARE TO BE ISOLATED AND INSULATED FROM ANY OTHER UTILITY AND MATERIAL.
6. ALL ELECTRICAL BOXES LOCATED IN FIRE RESISTANT ASSEMBLIES ARE TO BE INSTALLED SO AS NOT TO BREAK THE SPECIFIED FIRE RATING.
7. ALL DEVICES ARE TO ME MOUNTED VERTICALLY UNLESS OTHERWISE NOTED.
8. ALL RECEPTACLES/OUTLETS ARE TO BE INSTALLED WITH THE GROUND PIN IS DOWN.
9. ALL RATINGS ARE TO COMPLY WITH UNDERWRITERS LABORATORIES TEST RATINGS (UL RATING).

ELECTRIC
SOLAR DECATHLON
CONSTRUCTION DOCUMENTS

TEAM NAME: TEAM MASSACHUSETTS

ADDRESS: MASSART 621 HUNTINGTON AVE. BOSTON MA 02115

CONTACT: SPENCER CULHANE 602.677.6388 SPENCER.CULHANE@4DHOME.US WWW.4DHOME.US

CONSULTANTS

EPOCH HOMES

PASSIVE HOUSE INSTITUTE US

SLADEN FEINSTEIN INTEGRATED LIGHTING

LEMESSURIER CONSULTANTS, STRUCTURAL ENGINEERS

CLIENT

U.S. DEPARTMENT OF ENERGY

SOLAR DECATHLON 2011

WWW.SOLARDECATHLON.GOV

MARK	DATE	DESCRIPTION

LOT NUMBER:	NA
DRAWN BY:	SC_FL_EC
CHECKED BY:	PH
COPYRIGHT:	NONE: PROJECT IS PUBLIC DOMAIN

SHEET TITLE

ELECTRICAL SYMBOLS AND NOTES

E-001

8/12/2011 8:48:11 PM

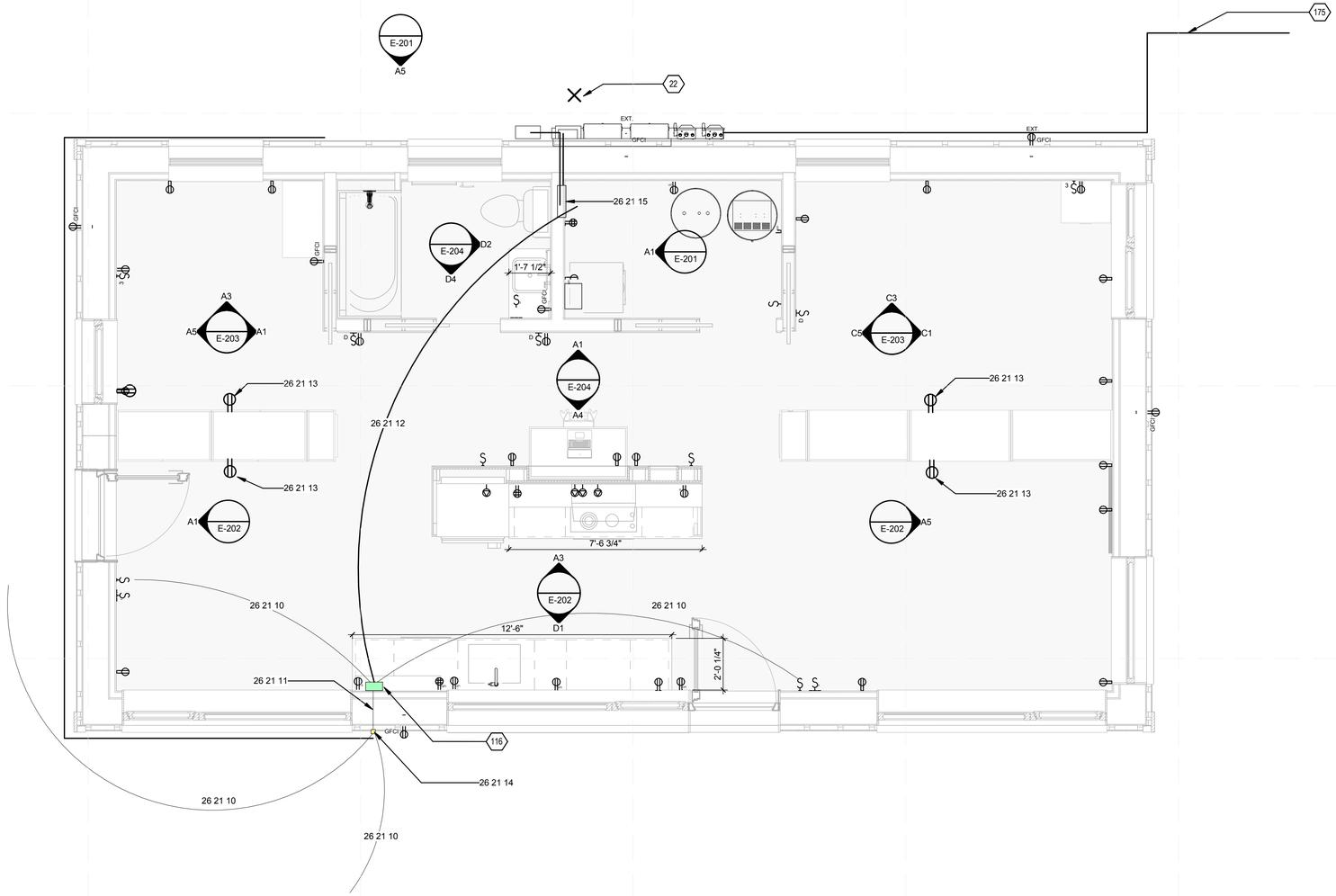

A1 ELECTRICAL POWER PLAN
3/8" = 1'-0"

0 2' 4' 8'

GENERAL SHEET NOTES

1. ALL RECEPTACLES SHALL BE TAMPER-RESISTANT.
2. ALL RECEPTACLES SHALL BE WEATHER-RESISTANT.
3. ALL RECEPTICLES WILL COORDINATE WITH THE INTERCONNECTION APPLICATION FORM. SEE TEAM MASSACHUSETTS PROJECT MANUAL PAGE 32.
4. ALL PV SYSTEMS WILL BE DESIGNED AND INSTALLED IN FULL COMPLIANCE WITH THE MOST CURRENT NEC CODE AND THE 2011 SD RULES AND BUILDING CODE.
5. PV MODULES, SOURCE-CIRCUIT COMBINERS, AND UTILITY- INTERACTIVE INVERTERS MUST BE SAFTEY CERTIFIED (LISTED) TO THE APPROPRIATE UNDERWRITERS LABORATORIES (UL) STANDARD (UL 1741 FOR INVERETERS AND COMBINERS, UL 1703 FOR PV MODULES).
6. DC CIRCUITS FROM THE PV MODULES TO THE DC PV DICONNECT MUST BE IN METAL CONDUITS (RACEWAYS) WHERE INSIDE THE STRUCTURE. (NEC 690.31 (E))
7. ALL PV STRINGS TO USE MANUFACTURER PROVIDED CABLE.
8. FLOOR RECEPTACLES ARE MISSING.

REFERENCE KEYNOTES

26 21 10	14/2 LOW VOLTAGE
26 21 11	14/3 LOW VOLTAGE
26 21 12	12/2 110V FEED
26 21 13	FLOOR RECEPTACLE
26 21 14	2X4 BELL BOX WITH 1/2" KOs
26 21 15	CIRCUIT PANEL

SHEET KEYNOTES

22	GROUNDING ROD
116	100VA TRANSFORMER, 110V PRIMARY / INPUT, 12 V AC SECONDARY / OUTPUT INSIDE BASE CABINET
175	ORGANIZER PROVIDED POWER CABLE TO GRID CONNECTION

TEAM NAME: TEAM MASSACHUSETTS

ADDRESS: MASSART 621 HUNTINGTON AVE. BOSTON MA 02115

CONTACT: SPENCER CULHANE 602.677.6388 SPENCER.CULHANE@4DHOME.US WWW.4DHOME.US

CONSULTANTS

EPOCH HOMES

PASSIVE HOUSE INSTITUTE US

SLADEN FEINSTEIN INTEGRATED LIGHTING

LEMESSURIER CONSULTANTS, STRUCTURAL ENGINEERS

CLIENT

U.S. DEPARTMENT OF ENERGY

SOLAR DECATHLON 2011

WWW.SOLARDECATHLON.GOV

MARK	DATE	DESCRIPTION

LOT NUMBER:	NA
DRAWN BY:	AD
CHECKED BY:	PH
COPYRIGHT:	NONE: PROJECT IS PUBLIC DOMAIN

SHEET TITLE

ELECTRICAL DISTRIBUTION PLAN

E-101

8/12/2011 8:48:17 PM

O	PV SYSTEM EQUIPMENT SCHEDULE				
TAG	COMPONENTS	NO.	MANUFACTURER	MODEL	NOTES
1	PV MODULE	28	SUNPOWER	E19 / 240	4 STRINGS OF 7 MODULES PER STRING
2	COMBINER BOX	2	WILEY ELECTRONICS	ACE-2P	NEMA 3R ENCLOSURE
3	DC DISCONNECT	2	SQUARE D	HU362RB	3-POLE UNFUSED, 60A, 600VDC, NEMA 3R ENCLOSURE, 200KA MAX SHORT CIRCUIT RATING
4	DC/AC INVERTER	2	SOLECTRIA	PVI 4000	NOT CAPABLE OF BACK-FEEDING CURRENTS, NEMA 4/IP 65 ENCLOSURE
5	AUX LOAD CENTER	1	SQUARE D	QO612L100RB	100A MAIN LUG LOAD CENTER, OUTDOOR RATED, 1Ø 120/240VAC 3W, 12 CIRCUITS 6 SPACES, 10 KA MAX SHORT CIRCUIT RATING
6	METER	1	GE	I-210+C	
7	MAIN LOAD CENTER	1	SQUARE D	HOM1632L200TC	240V, 200A, 1 PHASE, 16 SP, 10 KA MAX SHORT CIRCUIT RATING
8	METER	1	N/A	N/A	ORGANIZER SUPPLIED METER
9	GROUNDING ROD	2	ERICO	ERITECH 615880	8' by 5/8, UL LISTED
10	METER SOCKET	1	LANDIS & GYR		135A 4-JAW METER SOCKET, OUTDOOR RATED, 10 3W, 10KIAC
11	METER SOCKET	1	LANDIS & GYR	UAT4 BASE	
12	SOLAR THERMAL PANEL	6	SUNDRUM SOLAR	SDM100-10	3" MIN SPACING BETWEEN RACK RAILS AND INLET AND OUTLET PORTS ON SUNDRUM PANELS

PV MOUNTING SCHEDULE					
MANUFACTURER	COMPONENT	DESCRIPTION	QTY	SIZE	NOTES
IRONRIDGE	RAIL	XRS RAIL, ALUMINUM, CLEAR	4	12'	EACH ROW OF RAIL IS MADE UP OF ONE 12' AND TWO 14' SECTIONS
	RAIL	XRS RAIL, ALUMINUM, CLEAR	8	14'	
	MIDCLAMP ASSEMBLY	SIZE "F", MILL	52	2.5"	REQUIRES 1/4" SPACING BETWEEN PV PANELS.
	ENDCLAMP ASSEMBLY	SIZE "F", MILL	8	1.81"	
	SPLICE ASSEMBLY	SPLICE XRS, MILL	8		INTERNAL SPLICE. 2 SPLICES PER ROW OF RAIL.
	L-FOOT ASSEMBLY	ADJUSTABLE, MILL	40		ATTACHES RAIL TO TRELLIS FRAME.
WILEY ELECTRONICS	ACME CABLE CLIP (ACC)	MOLDED PVC, BLACK	56		HOLDS 2 USE-2 WIRES.
	WEEB BONDING JUMPER	304 STAINLESS STEEL	8		SINGLE-USE, ELECTRICALLY BONDS 2 SPLICED RAILS.
	WEEB COMPRESSION CLIP	304 STAINLESS STEEL	28		SINGLE-USE, ELECTRICALLY BONDS ALUMINUM RAIL TO PV FRAME.
	WEEB GROUNDING LUG	304 STAINLESS STEEL	4		SINGLE-USE, HOLDS EGC, GROUNDS ENTIRE ROW OF RAIL.
SUPPLY HOUSE	MC4 CABLE EXTENSIONS	LOCKING	2	50'	WILL BE SPLICED AND USED FOR BOTH STRINGS.
		LOCKING	2	25'	WILL BE SPLICED AND USED FOR BOTH STRINGS.

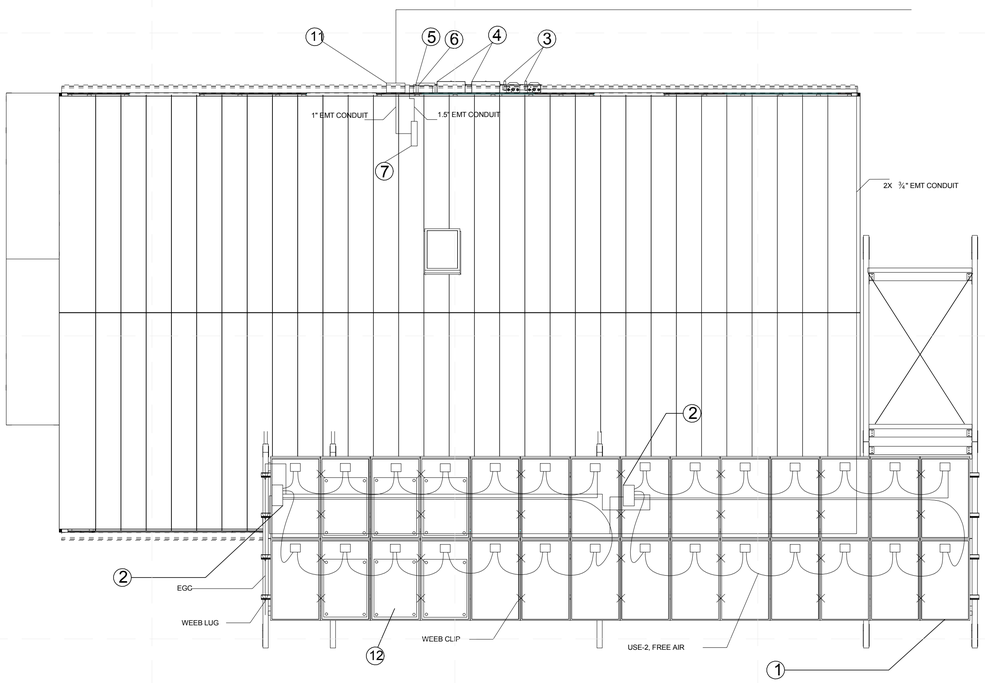

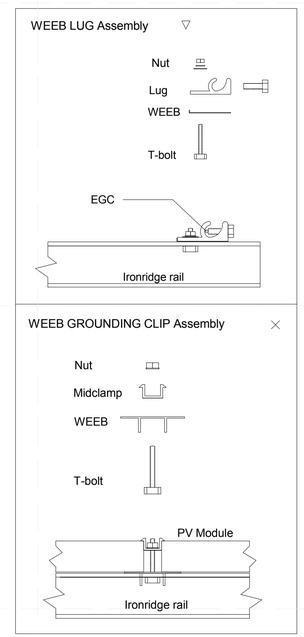

NOT SHOWN: WEEB BONDING JUMPERS (USED AT RAIL SPLICES)

A1 PHOTOVOLTAIC SYSTEMS PLAN
1/4" = 1'-0"

0 2' 4' 6'

GENERAL SHEET NOTES

1. ALL PV SYSTEMS WILL BE DESIGNED AND INSTALLED IN FULL COMPLIANCE WITH THE MOST CURRENT NEC CODE AND THE 2011 SD RULES AND BUILDING CODE.
2. PV MODULES, SOURCE-CIRCUIT COMBINERS, AND UTILITY-INTERACTIVE INVERTERS MUST BE SAFTEY CERTIFIED (LISTED) TO THE APPROPRIATE UNDERWRITERS LABORATORIES (UL) STANDARD (UL 1741 FOR INVERETERS AND COMBINERS, UL 1703 FOR PV MODULES).
3. DC CIRCUITS FROM THE PV MODULES TO THE DC PV DICONNECT MUST BE IN METAL CONDUITS (RACEWAYS) WHERE INSIDE THE STRUCTURE. (NEC 690.31 (E))
4. ALL PV STRINGS TO USE MANUFACTURER PROVIDED CABLE.

REFERENCE KEYNOTES

SHEET KEYNOTES

TEAM NAME: TEAM MASSACHUSETTS
ADDRESS: MASSART 621 HUNTINGTON AVE. BOSTON MA 02115
CONTACT: SPENCER CULHANE 602.677.6388 SPENCER.CULHANE@4DHOME.US WWW.4DHOME.US

CONSULTANTS
EPOCH HOMES
PASSIVE HOUSE INSTITUTE US
SLADEN FEINSTEIN INTEGRATED LIGHTING
LEMESSURIER CONSULTANTS, STRUCTURAL ENGINEERS

CLIENT
U.S. DEPARTMENT OF ENERGY
SOLAR DECATHLON 2011
WWW.SOLARDECATHLON.GOV

MARK	DATE	DESCRIPTION

LOT NUMBER: NA
DRAWN BY: JR
CHECKED BY: PH
COPYRIGHT: NONE: PROJECT IS PUBLIC DOMAIN

SHEET TITLE
PV WIRING PLAN

E-102

8/12/2011 8:48:21 PM

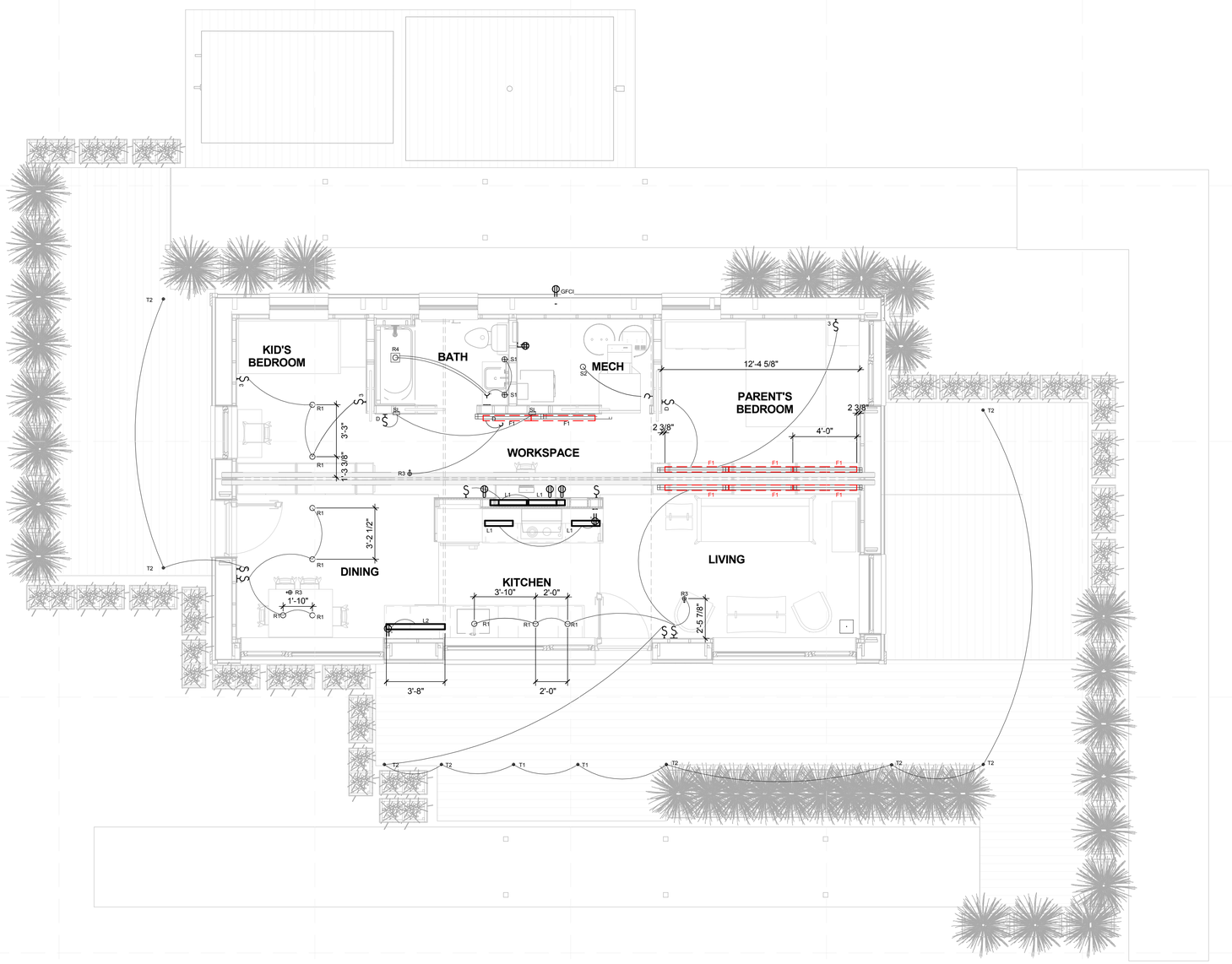

A1 LIGHTING PLAN
1/4" = 1'-0"

0 2' 4' 8'

8/12/2011 8:48:59 PM

GENERAL SHEET NOTES

REFERENCE KEYNOTES

SHEET KEYNOTES

4D HOME

TEAM NAME: TEAM MASSACHUSETTS

ADDRESS: MASSART 621 HUNTINGTON AVE. BOSTON MA 02115

CONTACT: SPENCER CULHANE 602.677.6388 SPENCER.CULHANE@4DHOME.US WWW.4DHOME.US

CONSULTANTS

EPOCH HOMES

PASSIVE HOUSE INSTITUTE US

SLADEN FEINSTEIN INTEGRATED LIGHTING

LEMESSURIER CONSULTANTS, STRUCTURAL ENGINEERS

CLIENT

U.S. DEPARTMENT OF ENERGY

SOLAR DECATHLON 2011

WWW.SOLARDECATHLON.GOV

U.S. DEPARTMENT OF ENERGY SOLAR DECATHLON

MARK	DATE	DESCRIPTION

LOT NUMBER: NA

DRAWN BY: AD

CHECKED BY: PH

COPYRIGHT: NONE: PROJECT IS PUBLIC DOMAIN

SHEET TITLE

LIGHTING PLAN

E-103

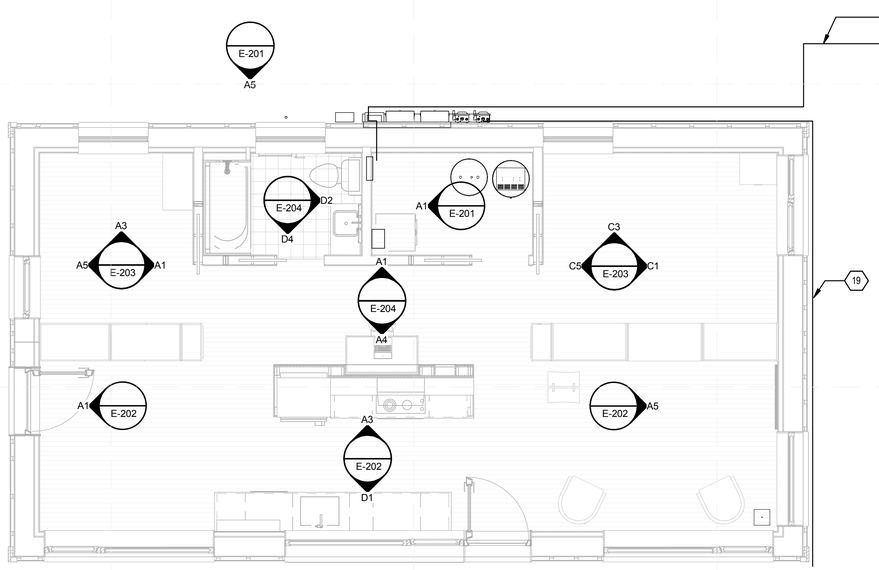

C1 ELECTRICAL CONTROL PLAN
1/4" = 1'-0"

0 2' 4' 8'

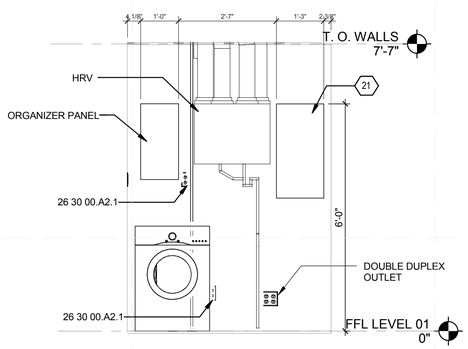

A1 TRANSVERSE SECTION MECH ROOM
1/2" = 1'-0"

0 2' 4' 6'

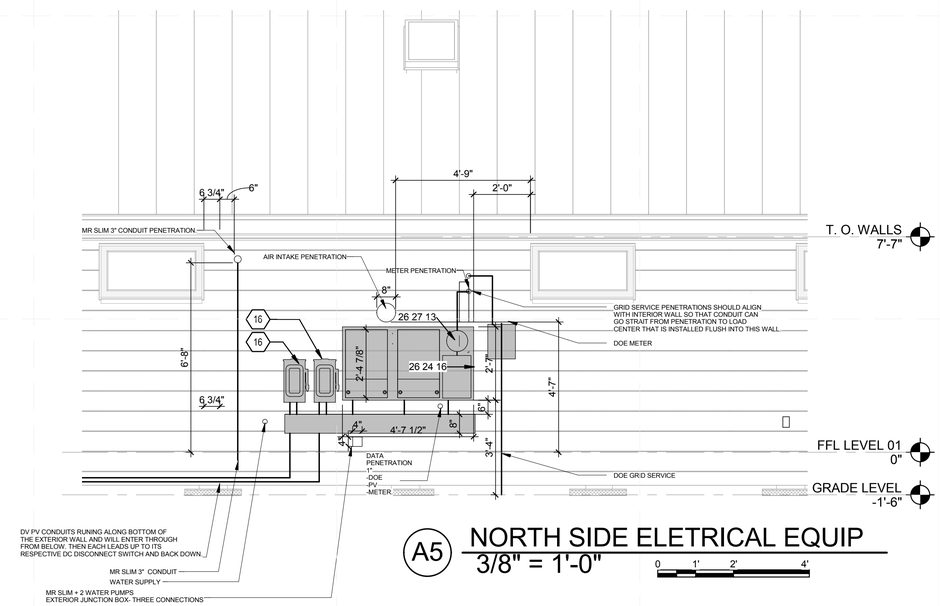

A5 NORTH SIDE ELETRICAL EQUIP
3/8" = 1'-0"

0 1' 2' 4'

GENERAL SHEET NOTES

REFERENCE KEYNOTES

26 24 16	PANEL BOARDS
26 27 13	ELECTRICITY METERING
26 30 00.A2.1	GFCI DOUBLE DUPLEX RECEPTACLE

SHEET KEYNOTES

16	DC DISCONNECT
19	CONDUIT UP TO ROOF
21	CIRCUIT PANEL
175	ORGANIZER PROVIDED POWER CABLE TO GRID CONNECTION

TEAM NAME: TEAM MASSACHUSETTS

ADDRESS: MASSART
621 HUNTINGTON AVE.
BOSTON MA 02115

CONTACT: SPENCER CULHANE 602.677.6388
SPENCER.CULHANE@4DHOME.US
WWW.4DHOME.US

CONSULTANTS

EPOCH HOMES

PASSIVE HOUSE INSTITUTE US

SLADEN FEINSTEIN INTEGRATED LIGHTING

LEMESSURIER CONSULTANTS, STRUCTURAL ENGINEERS

CLIENT

U.S. DEPARTMENT OF ENERGY

SOLAR DECATHLON 2011

WWW.SOLARDECATHLON.GOV

MARK	DATE	DESCRIPTION

LOT NUMBER:	NA
DRAWN BY:	FL
CHECKED BY:	PH
COPYRIGHT:	NONE: PROJECT IS PUBLIC DOMAIN

SHEET TITLE

ELECTRICAL ELEVATIONS

E-201

8/12/2011 8:49:12 PM

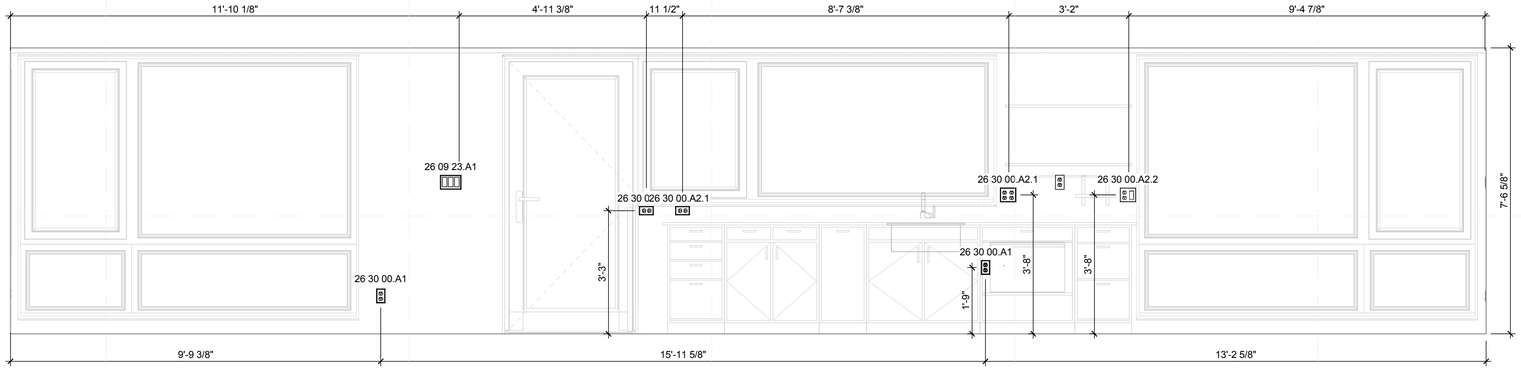

D1 ELEC SOUTH INTERIOR ELEVATION LIVING / KITHCEN / DINING
1/2" = 1'-0"

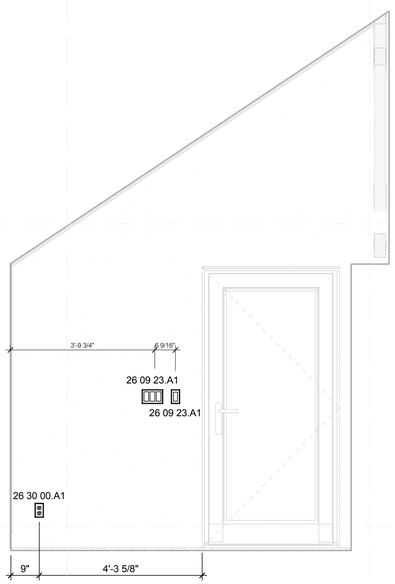

A1 ELEC WEST INTERIOR ELEVATION DINING
1/2" = 1'-0"

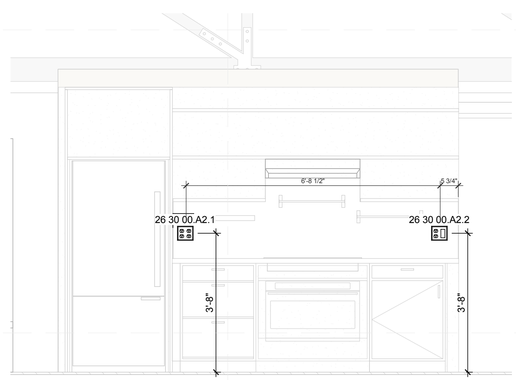

A3 ELEC NORTH INTERIOR ELEVATION KITCHEN
1/2" = 1'-0"

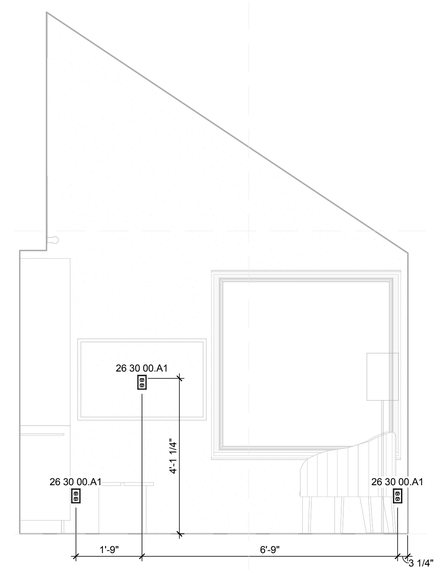

A5 ELEC EAST INTERIOR ELEVATION LIVING
1/2" = 1'-0"

GENERAL SHEET NOTES

1. UNLESS DIMENSIONED OTHERWISE, RECEPTICLES ARE 18" FINISHED FLOOR TO CENTER LINE. CENTER LINE AND LIGHT SWITCHS ARE 48" FINISHED FLOOR TO CENTER LINE.
2. EXACT POSITION OF OUTLETS IS SUBJECT TO CHANGE BASED ON WALL FRAMING.

REFERENCE KEYNOTES

26 09 23.A1	2-WAY SWITCH
26 30 00.A1	DUPLEX RECEPTACLE
26 30 00.A2.1	GFCI DOUBLE DUPLEX RECEPTACLE
26 30 00.A2.2	GFCI COMBINATION SWITCH AND RECEPTACLE
26 30 00.A3	120/240V 3 WIRE RECEPTACLE

SHEET KEYNOTES

TEAM NAME: TEAM MASSACHUSETTS
ADDRESS: MASSART 621 HUNTINGTON AVE. BOSTON MA 02115
CONTACT: SPENCER CULHANE 602.677.6388 SPENCER.CULHANE@4DHOME.US WWW.4DHOME.US

CONSULTANTS

EPOCH HOMES
PASSIVE HOUSE INSTITUTE US
SLADEN FEINSTEIN INTEGRATED LIGHTING
LEMESSURIER CONSULTANTS, STRUCTURAL ENGINEERS

CLIENT
U.S. DEPARTMENT OF ENERGY
SOLAR DECATHLON 2011
WWW.SOLARDECATHLON.GOV

MARK	DATE	DESCRIPTION

LOT NUMBER: NA
DRAWN BY: EC
CHECKED BY: Checker
COPYRIGHT: NONE: PROJECT IS PUBLIC DOMAIN

SHEET TITLE
ELECTRICAL ELEVATIONS

E-202

8/12/2011 8:49:25 PM

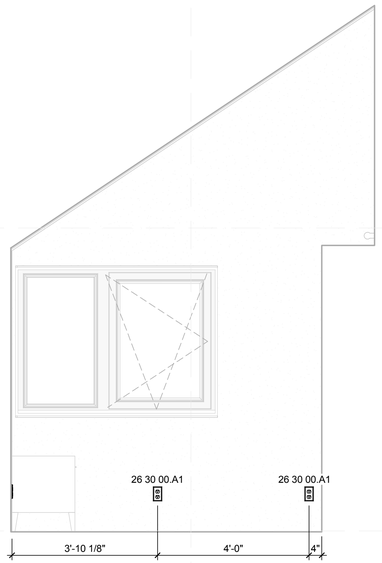

C1 ELEC EAST INT ELEVATION PARENT'S BR
1/2" = 1'-0"

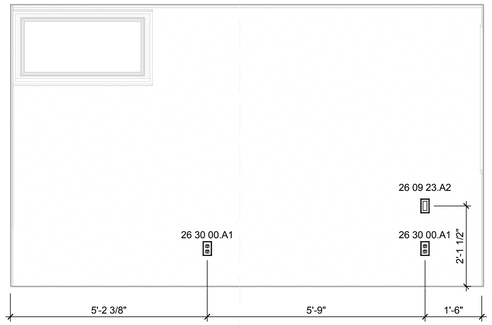

C3 ELEC NORTH INT ELEVATION PARENT'S BR
1/2" = 1'-0"

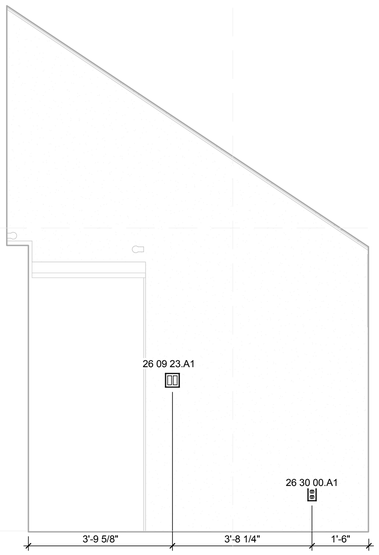

C5 ELEC WEST INT ELEVATION PARENT'S BR
1/2" = 1'-0"

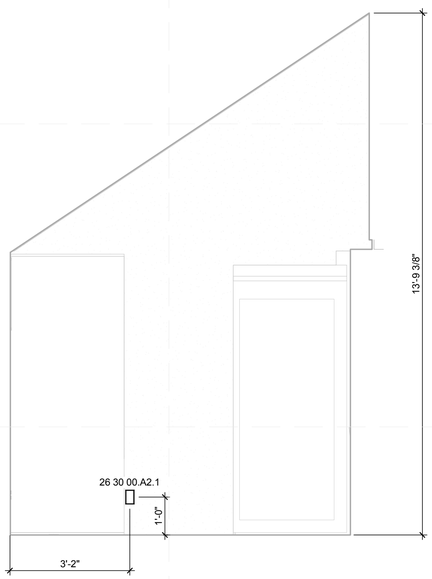

A1 ELEC EAST INT ELEVATION KID'S BR
1/2" = 1'-0"

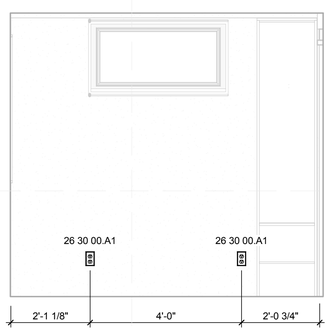

A3 ELEC NORTH INT ELEVATION KID'S BR
1/2" = 1'-0"

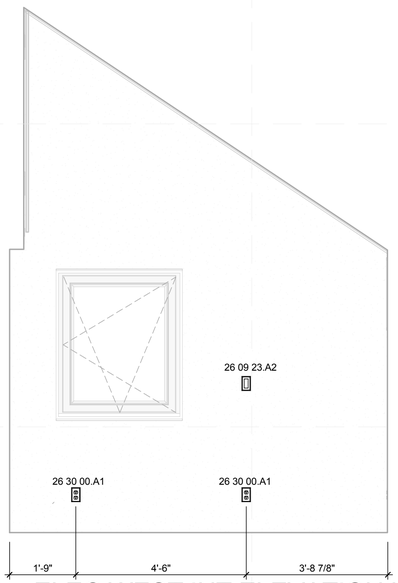

A5 ELEC WEST INT ELEVATION KID'S BR
1/2" = 1'-0"

GENERAL SHEET NOTES

1. UNLESS DIMENSIONED OTHERWISE, RECEPTICLES ARE 18" FINISHED FLOOR TO CENTER LINE. CENTER LINE AND LIGHT SWITCHS ARE 48" FINISHED FLOOR TO CENTER LINE.
2. EXACT POSITION OF OUTLETS IS SUBJECT TO CHANGE BASED ON WALL FRAMING.

REFERENCE KEYNOTES

12 58 29	BEDS
26 09 23.A1	2-WAY SWITCH
26 09 23.A2	3-WAY SWITCH
26 30 00.A1	DUPLEX RECEPTACLE
26 30 00.A2.1	GFCI DOUBLE DUPLEX RECEPTACLE

SHEET KEYNOTES

4D HOME

TEAM NAME: TEAM MASSACHUSETTS
ADDRESS: MASSART 621 HUNTINGTON AVE. BOSTON MA 02115
CONTACT: SPENCER CULHANE 602.677.6388 SPENCER.CULHANE@4DHOME.US WWW.4DHOME.US

CONSULTANTS

EPOCH HOMES
PASSIVE HOUSE INSTITUTE US
SLADEN FEINSTEIN INTEGRATED LIGHTING
LEMESSURIER CONSULTANTS, STRUCTURAL ENGINEERS

CLIENT

U.S. DEPARTMENT OF ENERGY
SOLAR DECATHLON 2011
WWW.SOLARDECATHLON.GOV

U.S. DEPARTMENT OF ENERGY SOLAR DECATHLON

MARK	DATE	DESCRIPTION

LOT NUMBER:	NA
DRAWN BY:	EC
CHECKED BY:	Checker
COPYRIGHT:	NONE: PROJECT IS PUBLIC DOMAIN

SHEET TITLE

ELECTRICAL ELEVATIONS

E-203

8/12/2011 8:49:41 PM

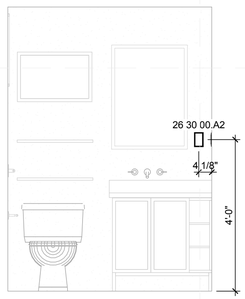

D2 ELEC EAST INT ELEVATION BATHROOM
1/2" = 1'-0"

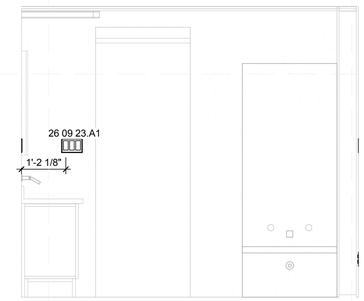

D4 ELEC SOUTH INT ELEVATION BATHROOM
1/2" = 1'-0"

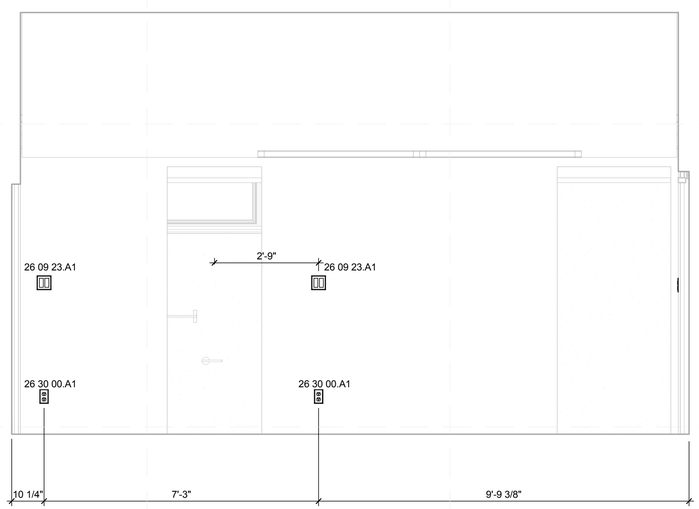

A1 ELEC NORTH INT ELEVATION WORK SPACE
1/2" = 1'-0"

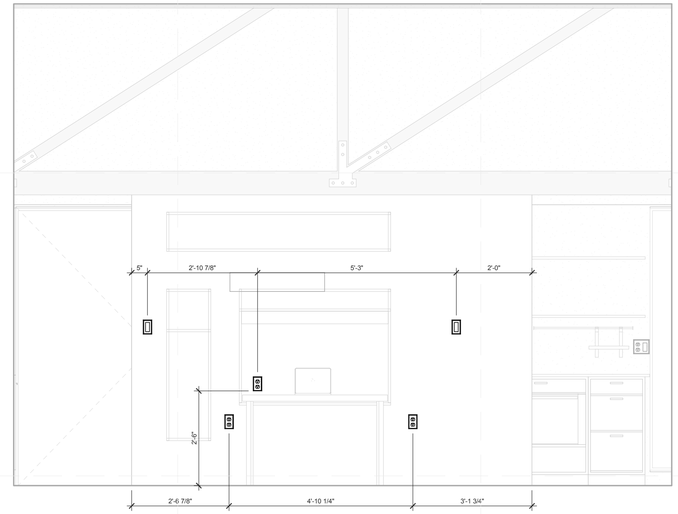

A4 ELEC SOUTH INT ELEVATION WORK SPACE
1/2" = 1'-0"

GENERAL SHEET NOTES

1. UNLESS DIMENSIONED OTHERWISE, RECEPTICLES ARE 18" FINISHED FLOOR TO CENTER LINE AND LIGHT SWITCHS ARE 48" FINISHED FLOOR TO CENTER LINE.
2. EXACT POSITION OF OUTLETS IS SUBJECT TO CHANGE BASED ON WALL FRAMING.

REFERENCE KEYNOTES

26 09 23.A1	2-WAY SWITCH
26 30 00.A1	DUPLEX RECEPTACLE
26 30 00.A2	GFCI RECEPTACLE

SHEET KEYNOTES

TEAM NAME: TEAM MASSACHUSETTS
ADDRESS: MASSART 621 HUNTINGTON AVE. BOSTON MA 02115
CONTACT: SPENCER CULHANE 602.677.6388 SPENCER.CULHANE@4DHOME.US WWW.4DHOME.US

CONSULTANTS

EPOCH HOMES
PASSIVE HOUSE INSTITUTE US
SLADEN FEINSTEIN INTEGRATED LIGHTING
LEMESSURIER CONSULTANTS, STRUCTURAL ENGINEERS

CLIENT

U.S. DEPARTMENT OF ENERGY
SOLAR DECATHLON 2011
WWW.SOLARDECATHLON.GOV

MARK	DATE	DESCRIPTION

LOT NUMBER:	NA
DRAWN BY:	EC
CHECKED BY:	Checker
COPYRIGHT:	NONE: PROJECT IS PUBLIC DOMAIN

SHEET TITLE

ELECTRICAL ELEVATIONS

E-204

8/12/2011 8:49:49 PM

O	PV SYSTEM EQUIPMENT SCHEDULE				
TAG	COMPONENTS	NO.	MANUFACTURER	MODEL	NOTES
1	PV MODULE	28	SUNPOWER	E19 / 240	4 STRINGS OF 7 MODULES PER STRING
2	COMBINER BOX	2	WILEY ELECTRONICS	ACE-2P	NEMA 3R ENCLOSURE
3	DC DISCONNECT	2	SQUARE D	HU362RB	3-POLE UNFUSED, 60A, 600VDC, NEMA 3R ENCLOSURE, 200KA MAX SHORT CIRCUIT RATING
4	DC/AC INVERTER	2	SOLECTRIA	PVI 4000	NOT CAPABLE OF BACK-FEEDING CURRENTS, NEMA 4/IP 65 ENCLOSURE
5	AUX LOAD CENTER	1	SQUARE D	QO612L100RB	100A MAIN LUG LOAD CENTER, OUTDOOR RATED, 1Ø 120/240VAC 3W, 12 CIRCUITS 6 SPACES, 10 KA MAX SHORT CIRCUIT RATING
6	METER	1	GE	I-210+C	
7	MAIN LOAD CENTER	1	SQUARE D	HOM1632L200TC	240V, 200A, 1 PHASE, 16 SP, 10 KA MAX SHORT CIRCUIT RATING
8	METER	1	N/A	N/A	ORGANIZER SUPPLIED METER

△	CONDUCTOR AND CONDUIT SCHEDULE				
TAG	DESCRIPTION OR CONDUCTOR TYPE	CONDUCTOR SIZE	#/COLOR OF CONDUCTORS	CONDUIT TYPE	CONDUIT SIZE
1	USE-2	10 AWG	4/BLACK,4/BLACK W/WHITE TERMINAL MARKINGS	FREE AIR	N/A
	GROUNDING CONDUCTOR (EGC)	10 AWG	2/BARE CU	FREE AIR	N/A
2 & 3	THWN-2	10 AWG	1/BLACK, 1/WHITE PER CONDUIT	2/EMT	3/4''
	INSULATED EGC	10 AWG	1/GREEN PER CONDUIT		
4	THWN-2	10 AWG	2/RED, 2/BLACK, 2/WHITE PER CONDUIT	2/EMT	3/4''
	INSULATED EGC	10 AWG	1/GREEN PER CONDUIT		
5	THWN-2	4 AWG	1/BLACK, 1/RED, 1/WHITE	EMT	1.5"
	INSULATED EGC	10 AWG	1 BARE CU		
6	GROUNDING ELECTRODE CONDUCTOR (GEC)	4 AWG	1 BARE CU	N/A	N/A
7	THWN-2	2/0 AWG	2/BLACK, 1/WHITE	1/EMT	1"

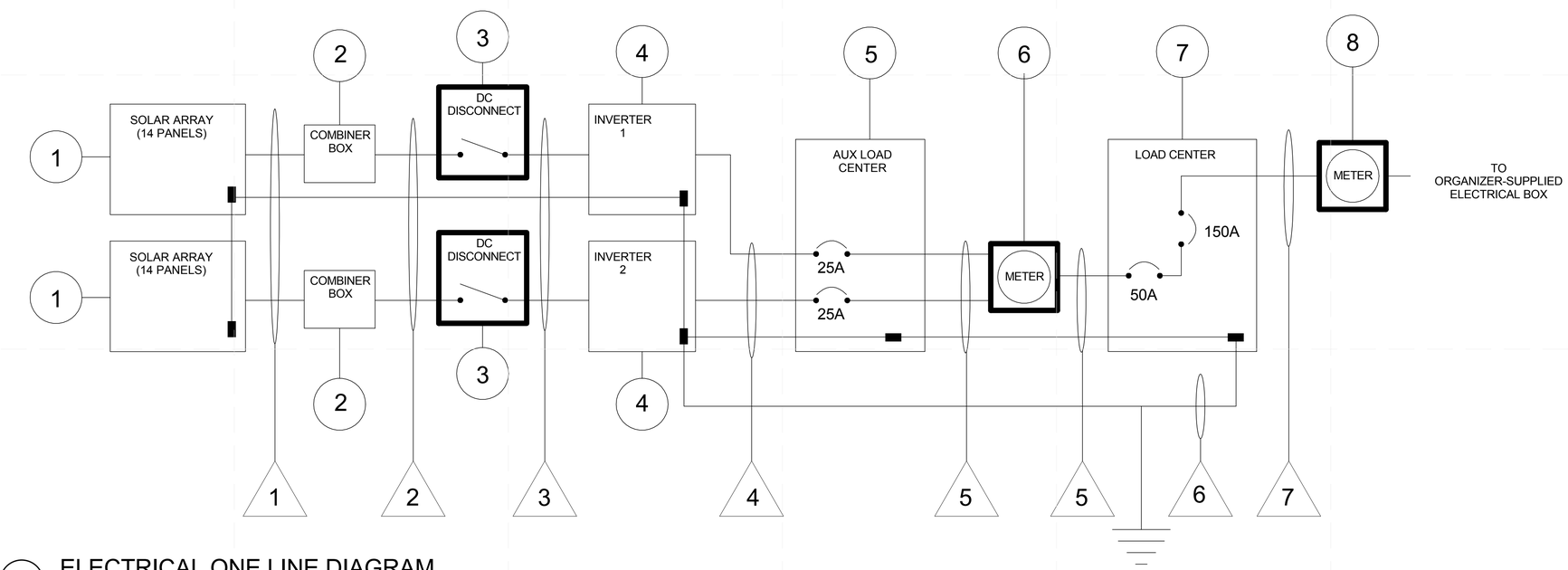

A1 ELECTRICAL ONE LINE DIAGRAM
1/2" = 1'-0"

GENERAL SHEET NOTES

REFERENCE KEYNOTES

SHEET KEYNOTES

4DHOME

TEAM NAME: TEAM MASSACHUSETTS
ADDRESS: MASSART 621 HUNTINGTON AVE. BOSTON MA 02115
CONTACT: SPENCER CULHANE 602.677.6388 SPENCER.CULHANE@4DHOME.US WWW.4DHOME.US

CONSULTANTS
EPOCH HOMES
PASSIVE HOUSE INSTITUTE US
SLADEN FEINSTEIN INTEGRATED LIGHTING
LEMESSURIER CONSULTANTS, STRUCTURAL ENGINEERS

CLIENT
U.S. DEPARTMENT OF ENERGY
SOLAR DECATHLON 2011
WWW.SOLARDECATHLON.GOV

U.S. DEPARTMENT OF ENERGY SOLAR DECATHLON

MARK	DATE	DESCRIPTION

LOT NUMBER: NA
DRAWN BY: FL
CHECKED BY: PH
COPYRIGHT: NONE: PROJECT IS PUBLIC DOMAIN

SHEET TITLE
ONE-LINE DIAGRAM

E-601

8/12/2011 8:49:53 PM

MODULES		
MANUFACTURER	SUNPOWER	UNITS
MODULE MODEL	E19 / 240	
MAX POWER-POINT CURRENT (IMP)	5.93	A
MAX POWER-POINT VOLTAGE (VMP)	40.50	V
OPEN-CIRCUIT VOLTAGE (VOC)	48.60	V
SHORT-CIRCUIT CURRENT (ISC)	6.30	A
MAX SERIES FUSE (OCPD)	20	A
MAXIMUM POWER (PMAX)	240	W
MAX ALLOWABLE VOLTAGE (VDC)	600	V
VOLTAGE COEFFICIENT(Voc)	-0.1325	V/K
TEMP COEFF	- 0.38	(%/°C)
LISTINGS	UL 1703, UL FIRE SAFETY CLASS C.	

INVERTERS	
MANUFACTURER	SOLECTRIA
MODEL	PVI 4000
Number	2
MAX DC INPUT VOLTAGE (V)	600
RATED OUTPUT POWER (W)	3900
NOMINAL AC OPERATING VOLTAGE (V)	240
AC OUTPUT CURRENT (A)	16.25

PV SYSTEM EQUIPMENT SCHEDULE

TAG	COMPONENTS		MANUFACTURER	MODEL	NOTES
1	PV MODULE	28	SUNPOWER	E19 / 240	4 STRINGS OF 7 MODULES PER STRING
2	COMBINER BOX	2	WILEY ELECTRONICS	ACE-2P	NEMA 3R ENCLOSURE
3	DC DISCONNECT	2	SQUARE D	HU362RB	3-POLE UNFUSED, 60A, 600VDC, NEMA 3R ENCLOSURE, 200KA MAX SHORT CIRCUIT RATING
4	DC/AC INVERTER	2	SOLECTRIA	PVI 4000	NOT CAPABLE OF BACK-FEEDING CURRENTS, NEMA 4/IP 65 ENCLOSURE
5	AUX LOAD CENTER	1	SQUARE D	QO612L100RB	100A MAIN LUG LOAD CENTER, OUTDOOR RATED, 1Ø 120/240VAC 3W, 12 CIRCUITS 6 SPACES, 10 KA MAX SHORT CIRCUIT RATING
6	PV METER	1	GE	I-210+C	
7	MAIN LOAD CENTER	1	SQUARE D	HOM1632L200TC	240V, 200A, 1 PHASE, 16 SP, 10 KA MAX SHORT CIRCUIT RATING
8	SERVICE METER	1	N/A	N/A	ORGANIZER SUPPLIED METER

CONDUCTOR AND CONDUIT SCHEDULE

TAG	DESCRIPTION OR CONDUCTOR TYPE	CONDUCTOR GAUGE	#/COLOR OF CONDUCTORS	CONDUIT TYPE	CONDUIT SIZE
1	USE-2	10 AWG	4/BLACK,4/BLACK W/WHITE TERMINAL MARKINGS	FREE AIR	N/A
	EQUIP. GROUNDING CONDUCTOR (EGC)	10 AWG	2/BARE CU	FREE AIR	N/A
2 & 3	THWN-2	10 AWG	1/BLACK, 1/WHITE PER CONDUIT	2/EMT	3/4''
	INSULATED EGC	10 AWG	1/GREEN PER CONDUIT		
4	THWN-2	10 AWG	2/RED, 2/BLACK, 2/WHITE PER CONDUIT	2/EMT	3/4''
	INSULATED EGC	10 AWG	1/GREEN PER CONDUIT		
5	THWN-2	4 AWG	1/BLACK, 1/RED, 1/WHITE	EMT	1.5"
	INSULATED EGC	10 AWG	1/GREEN		
6	GROUNDING ELECTRODE CONDUCTOR (GEC)	4 AWG	1 BARE CU	N/A	N/A
7	THWN-2	2/0 AWG	2/BLACK, 1/WHITE	EMT	1"
8	THWN-2	2 /0 AWG	2/BLACK, 1/WHITE	N/A	N/A

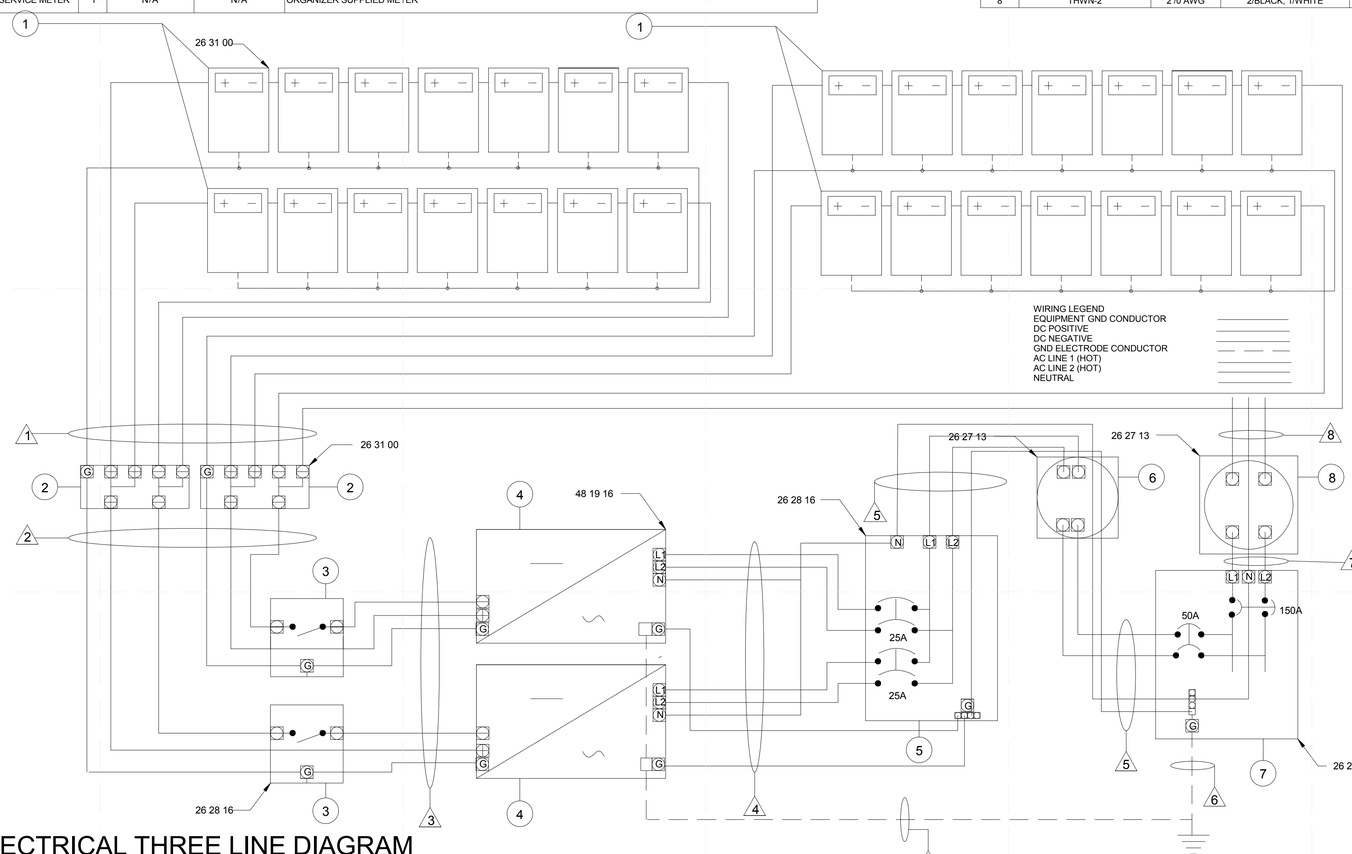

A1 ELECTRICAL THREE LINE DIAGRAM
1/4" = 1'-0"

0 2' 4' 8'

Design Temperatures		ASHRAE		
LOWEST EXPECTED TEMPERATURE (C)	-17	mean annual minimum temperature		
HIGHEST TEMPERATURE BOSTON (C)	33	2(mins) 2% design temperature for Boston		
690.7 MAXIMUM VOLTAGE				
MODULE OPEN CIRCUIT VOLTAGE(VOC)	48.60	V		
MODIFICATION FOR REMOTE DISTC TO LOWEST	7			
TEMP(EFF) (C)	-10			
MODULE VOLTAGE COEFFICENT(VOC)	-0.1325	V/C		
MAX VOLTAGE = (VOC+((ET*VCOEFF)*NO. OF MODULES IN SERIES	**379.2**	V	(must be <600V per 690.7 (C))	
DC CALCULATIONS				
ARRAY TO COMBINER BOX (SECTION 1)				
CALCULATION OF MAX CIRCUIT CURRENT				
MAX CURRENT (IMAX) = ISC *1.25	7.88	Amps		
CALCULATION OF AMPACITY OF AMPACITY = IMAX *1.25	9.84	Amps		
TEMPERATURE CORRECTION (OSC FOR 90C CONDUCTOR)	0.76		Table 310.16	
10 AWG USE-2 AMPACITY @ 90 C	40	Amps	Table 310.16	
REDUCED AMPACITY = AMPACITY*TEMP CORR FACTOR	30.4	Amps	30.4 > 19.84 so ok to use 10 AWG	
GROUNDING CONDUCTOR	10 AWG		Table 250.122	
OVERCURRENT DEVICE CALCULATIONS:				
OVERCURRENT DEVICE RATING = IMAX*1.25*2	19.69	Amps		
NOTE: OVER-CURRENT PROTECTION NOT REQ'D FOR THIS SECTION PER EXCEPTION 690.9 (A)				
VOLTAGE DROP CALCULATIONS:				
LENGTH OF WIRE IN FEET	50			
OHMS/1000 FEET OF 10 AWG WIRE	2.0		Table 9	
VOLTAGE DROP	0.79	V	< Less than 0.3%	
CONDUIT SIZE CALCULATIONS:				
NOTE: CONDUCTORS ARE NOT IN CONDUITS FOR **COMBINER BOX TO INVERTER (SECTIONS 2 & 3)**				
CALCULATION OF MAX CIRCUIT CURRENT				
MAX CURRENT2 (IMAX2) = 2*IMAX	15.75	Amps		
CALCULATION OF AMPACITY OF AMPACITY = IMAX2 *1.25	19.69	Amps		
AMBIENT TEMPERATURE (CORRECTION FOR CONDUIT EXPOSED TO SUNLIGHT	22	C	Table 310.15 (B)(2)(a)	
TEMPERATURE CORRECTION FACTOR	0.76		Table 310.16	
CONDUIT FILL FACTOR: NO REDUCTION SINCE ONLY 3 CONDUCTORS PER CONDUIT	1			
TOTAL REDUCTION IN CONDUCTOR AMPACITY	0.76			
10 AWG THWN-2 CURRENT AMPACITY @ 90 C	40	Amps	Table 310.16	
REDUCED AMPACITY	30.4	Amps	30.4 > 19.69, so ok to use 10 AWG	
GROUNDING CONDUCTOR	10	AWG	Table 250.122	
OVERCURRENT DEVICE CALCULATIONS:				
OVERCURRENT DEVICE RATING = IMAX2*1.25	19.69	Amps		
NOTE: OVER-CURRENT PROTECTION NOT REQ'D FOR THIS SECTION PER EXCEPTION 690.9 (A)				
VOLTAGE DROP CALCULATIONS:				
LENGTH OF WIRE IN FEET	50			
OHMS/1000 FEET OF 10 AWG WIRE	2		Table 9	
VOLTAGE DROP	1.58	V	<less than 3% of max voltage	
CONDUIT SIZE CALCULATIONS:				
CONDUIT FILL PERCENTAGE	40	%	Table 1 chapter 9	
WIRE SIZE (10 AWG)	13.61	mm^2	Table 9 chapter 9	
NO. OF 10 AWG CABLES PER CONDUIT	3			
MINIMUM CONDUIT SIZE = AREA OF CONDUCTOR*# OF CONDUCTORS/0.40	102.08	mm^2	Need to use conduit w/area >=102.08	
SIZE OF SUITABLE CONDUIT	3/4	Trade size	EMT (reduced area = 137 mm^2) table 4 ch9	
NO. OF CONDUITS	2			
AC CALCULATIONS				
INVERTERS TO AUX LOAD CENTER (SECTION 4)				
CALCULATION OF AMPACITY SHALL BE THE CONTINUOUS OUTPUT CURRENT RATING (690.8 (A)(1))	16.25	Amps	data sheet	
CALCULATION OF AMPACITY OF AMPACITY = IAC *1.25	20.31	Amps		
CONDUIT FILL FACTOR	0.80		Table 310.15(B)(2)(a)	
TEMP CORRECTION FACTOR	0.76		Table 310.16	
TOTAL REDUCTION IN CONDUCTOR AMPACITY	0.61			
10 AWG THWN-2 CURRENT AMPACITY @ 90 C	40.90	Amps		
REDUCED AMPACITY	24.32	Amps	24.32 > 20.31, so ok to use 10 AWG	
GROUNDING CONDUCTOR	10	AWG	Table 250.122	
OVERCURRENT DEVICE CALCULATIONS:				
OVERCURRENT DEVICE CAPACITY >= 1.25*IACMAX	20.31	Amps		
NEXT HIGHEST CB AVAILABLE	25	Amps		
VOLTAGE DROP CALCULATIONS:				
ZERO DROP: LESS THAN 3' OF CONDUCTOR				
CONDUIT SIZE CALCULATIONS:				
CONDUIT FILL PERCENTAGE	40	%	Table 1 chapter 9	
WIRE SIZE (10 AWG)	13.61	mm^2	Table 9 chapter 9	
NO. OF 10 AWG CABLES PER CONDUIT	3.0000			
MINIMUM CONDUIT SIZE = AREA OF CONDUCTOR*# OF CONDUCTORS/0.40	102.08	mm^2	Need to use conduit w/area >=102.08	
SIZE OF SUITABLE CONDUIT	3/4	Trade size	EMT (reduced area = 137 mm^2) table 4 ch9	
NO. OF CONDUITS	2			
INVERTERS TO MAIN LOAD CENTER (SECTION 5)				
CALCULATION OF MAX CIRCUIT CURRENT				
IAC2 = 2*IAC	32.50	Amps		
CALCULATION OF AMPACITY OF AMPACITY = (SUM OF AMP RATINGS OF OVERCURRENT DEVICES IN CIRCUIT)/120%			690.64(B)(2)	
(25A + 25A +50A)/1.2 =	83	Amps	690.64(B)(2)	
CONDUIT FILL FACTOR: NO REDUCTION FOR JUST 3 CONDUCTORS IN CONDUIT	1			
TEMP CORRECTION FACTOR	0.96			
TOTAL REDUCTION IN CONDUCTOR AMPACITY	0.96			
4 AWG THWN-2 CURRENT AMPACITY @ 90 C	95	Amps		
REDUCED AMPACITY	91.2	Amps	91.2 > 83, so ok to use 4 AWG	
GROUNDING CONDUCTOR	10	AWG	Table 250.122	
OVERCURRENT DEVICE CALCULATIONS:				
OVERCURRENT DEVICE CAPACITY >= 1.25*IAC2	40.625	Amps		
NEXT HIGHEST CB AVAILABLE	50	Amps		
VOLTAGE DROP CALCULATIONS:				
LENGTH OF WIRE IN FEET	8			
OHMS/1000 FEET OF 4 AWG WIRE	1.02		Table 9	
VOLTAGE DROP	0.68	V	Less than 1%	
CONDUIT SIZE CALCULATIONS:				
CONDUIT FILL PERCENTAGE	40	%	Table 1 chapter 9	
WIRE SIZE (4 AWG)	53.16	mm^2	Table 9 chapter 9	
NO. OF CABLES PER CONDUIT	3			
MINIMUM CONDUIT SIZE = AREA OF CONDUCTOR*# OF CONDUCTORS/0.40	398.7	mm^2	Need to use conduit w/area >=398.7	
SIZE OF SUITABLE CONDUIT	1 1/2	trade size	EMT (reduced area = 526 mm^2) table 4 ch9	
NO. OF CONDUITS	1			

TEAM NAME: TEAM MASSACHUSETTS
ADDRESS: MASSART 621 HUNTINGTON AVE. BOSTON,MA 02115
CONTACT: SPENCER CULHANE 602.677.6388 SPENCER.CULHANE@4DHOME.US WWW.4DHOME.US

CONSULTANTS

EPOCH HOMES

PASSIVE HOUSE INSTITUTE US

SLADEN FEINSTEIN INTEGRATED LIGHTING

LEMESSURIER CONSULTANTS, STRUCTURAL ENGINEERS

CLIENT

U.S. DEPARTMENT OF ENERGY

SOLAR DECATHLON 2011

WWW.SOLARDECATHLON.GOV

MARK	DATE	DESCRIPTION

LOT NUMBER: NA

DRAWN BY: FL

CHECKED BY: PH

COPYRIGHT: NONE: PROJECT IS PUBLIC DOMAIN

SHEET TITLE

THREE-LINE DIAGRAM

E-602

8/12/2011 8:49:55 PM

MODULES		
MANUFACTURER	SUNPOWER	UNITS
MODULE MODEL	E19 / 240	
MAX POWER-POINT CURRENT (IMP)	5.93	A
MAX POWER-POINT VOLTAGE (VMP)	40.50	V
OPEN-CIRCUIT VOLTAGE (VOC)	48.60	V
SHORT-CIRCUIT CURRENT (ISC)	6.30	A
MAX SERIES FUSE (OCPD)	20	A
MAXIMUM POWER (PMAX)	240	W
MAX ALLOWABLE VOLTAGE (VDC)	600	V
VOLTAGE COEFFICIENT(Voc)	-0.1325	V/K
TEMP COEFF	- 0.38	(%/°C)
LISTINGS	UL 1703, UL FIRE SAFETY CLASS C.	

INVERTERS	
MANUFACTURER	SOLECTRIA
MODEL	PVI 4000
Number	2
MAX DC INPUT VOLTAGE (V)	600
RATED OUTPUT POWER (W)	3900
NOMINAL AC OPERATING VOLTAGE (V)	240
AC OUTPUT CURRENT (A)	16.25

CONDUCTOR AND CONDUIT SCHEDULE					
TAG	DESCRIPTION OR CONDUCTOR TYPE	CONDUCTOR GAUGE	#/COLOR OF CONDUCTORS	CONDUIT TYPE	CONDUIT SIZE
1	USE-2	10 AWG	4/BLACK,4/BLACK W/WHITE TERMINAL MARKINGS	FREE AIR	N/A
	EQUIP. GROUNDING CONDUCTOR (EGC)	10 AWG	2/BARE CU	FREE AIR	N/A
2 & 3	THWN-2	10 AWG	1/BLACK, 1/WHITE PER CONDUIT	2/EMT	3/4''
	INSULATED EGC	10 AWG	1/GREEN PER CONDUIT		
4	THWN-2	10 AWG	2/RED, 2/BLACK, 2/WHITE PER CONDUIT	2/EMT	3/4''
	INSULATED EGC	10 AWG	1/GREEN PER CONDUIT		
5	THWN-2	4 AWG	1/BLACK, 1/RED, 1/WHITE	EMT	1.5"
	INSULATED EGC	10 AWG	1/GREEN		
6	GROUNDING ELECTRODE CONDUCTOR (GEC)	4 AWG	1 BARE CU	N/A	N/A
7	THWN-2	2/0 AWG	2/BLACK, 1/WHITE	1/EMT	1"
8	THWN-2	2 /0 AWG	2/BLACK, 1/WHITE	N/A	N/A

O	PV SYSTEM EQUIPMENT SCHEDULE				
TAG	COMPONENTS	NO.	MANUFACTURER	MODEL	NOTES
1	PV MODULE	28	SUNPOWER	E19 / 240	4 STRINGS OF 7 MODULES PER STRING
2	COMBINER BOX	2	WILEY ELECTRONICS	ACE-2P	NEMA 3R ENCLOSURE
3	DC DISCONNECT	2	SQUARE D	HU362RB	3-POLE UNFUSED, 60A, 600VDC, NEMA 3R ENCLOSURE, 200KA MAX SHORT CIRCUIT RATING
4	DC/AC INVERTER	2	SOLECTRIA	PVI 4000	NOT CAPABLE OF BACK-FEEDING CURRENTS, NEMA 4/IP 65 ENCLOSURE
5	AUX LOAD CENTER	1	SQUARE D	QO612L100RB	100A MAIN LUG LOAD CENTER, OUTDOOR RATED, 1Ø 120/240VAC 3W, 12 CIRCUITS 6 SPACES, 10 KA MAX SHORT CIRCUIT RATING
6	METER	1	GE	I-210+C	
7	MAIN LOAD CENTER	1	SQUARE D	HOM1632L200TC	240V, 200A, 1 PHASE, 16 SP, 10 KA MAX SHORT CIRCUIT RATING
8	METER	1	N/A	N/A	ORGANIZER SUPPLIED METER
9	GROUNDING ROD	2	ERICO	ERITECH 615880	8' by 5/8, UL LISTED
10	METER SOCKET	1	LANDIS & GYR	UAT4 BASE	135A 4-JAW METER SOCKET, OUTDOOR RATED, 10 3W, 10KIAC
11	METER SOCKET	1	LANDIS & GYR	UAT4 BASE	135A 4-JAW METER SOCKET, OUTDOOR RATED, 10 3W, 10KIAC
12	SOLAR THERMAL PANEL	6	SUNDRUM SOLAR	SDM100-10	3" MIN SPACING BETWEEN RACK RAILS AND INLET AND OUTLET PORTS ON SUNDRUM PANELS

LOAD CENTER LAYOUT							
APPLIANCE OR LOCATION	AMPACITY	WIRE SIZE (AWG)	BREAKER #	BREAKER #	WIRE SIZE (AWG)	AMPACITY	APPLIANCE OR LOCATION
COOKTOP	40	8	1 & 3	2 & 4	8	40	50 GAL HOT WATER TANK
KITCHEN 1, COOKTOP SIDE (GFCI)	20	12	5.0000	6 & 8	8	40	DRYER
KITCHEN 2, SINK SIDE (GFCI)	20	12	7.0000				
REFRIDGERATOR	20	12	9.0000	10.0000	12	20	LAUNDRY (WASHER/DRYER)
DISHWASHER	20	12	11.0000	12.0000	12	20	MR.SLIM HEAT PUMP (GFCI)
BATHROOM (GFCI)	20	12	13.0000	14.0000	12	20	DOMESTIC SUPPLY WATER PUMP (GFCI)
COOKTOP HOOD	15	14	15.0000	16.0000	12	20	MICROWAVE (GFCI)
BEDROOM 1 (AFCI)	15	14	17.0000	18.0000	14	15	AIR SOURCE WATER HEAT PUMP
BEDROOM 2 (AFCI)	15	14	19.0000	20.0000	14	15	DININGROOM (AFCI)
OUTDOOR(GFCI)	15	14	21.0000	22.0000	14	15	MECH ROOM (AFCI)
SMOKE DETECTORS & CO2 MONITOR	15	14	23.0000	32 24.0000	14	15	DEHUMIDIFIER
WORKSPACE (AFCI)	15	14	25.0000	26.0000	14	15	LIVINGROOM & WEATHER STATION (AFCI)
HRV	15	14	27.0000	28.0000	-	-	SPARE
SPARE	-	-	29.0000	30 &32	4	50	PV INVERTERS (GFCI)
SPARE	-	-	31.0000				

APPLIANCE SCHEDULE		
APPLIANCE	MANUFACTURER	MODEL
REFRIGERATOR	WHIRLPOOL	GB9FHDXWS
DISHWASHER	FISHER & PAYKEL	DD24SCX6
COOK TOP	BOSCH	NET5054UC 500 Series
MICROWAVE	GE MONOGRAM BUILT-IN OVEN	ZSC1201NSS
COOKTOP HOOD	BROAN	413004.0000
WASHER/DRYER	LG	WM3455HW
TELEVISION	PANASONIC	TC-L42D2
HOME THEATER	SONY	BDV-E770W
LAPTOP	HP	DV7
HEAT PUMP	MITSUBISHI	SEZKD09NA+SUZKA09NA
DEHUMIDIFIER	HONEYWELL	TRUEDRY DR65
HRV	NU-AIR	ES100
WATER HEAT PUMP	USI GREEN ENERGY	WH270
50 GAL WATER HEATER	STATE WATER HEATERS	ES50-DOCS
80 GAL SOLAR WATER TANK	HEAT TRANSFER PRODUCTS	SSC-80SE

LIGHTING SCHEDULE					
Location	Fixture symbol/type	Mounting	Manufacturer	Product number	Fixture quantity
Livingroom	R3	canopy	Amerlux	cntrv22-12-LED-E--WT-C-120-NF-3000-DIM	2.0000
	F1	Surface-Mounted	ALKCO	TAB125-ASY-120-BA/AL-CL+LS	3.0000
Kitchen	R1	LSTA4-8420-C1	USAI	3140-10-S-LSTA4-8420-C1-20W-30-30-NC-120-DIML3	3.0000
	L1		ALKCO	ARIS-21- 40-120-PRL-HWC/AJC6	2.0000
	L2		ALKCO	ARIS-41- 40-120-PRL-HWC/AJC6	1.0000
Diningroom	R1	LSTA4-8420-C1	Insight	3140-10-S-LSTA4-8420-C1-20W-30-30-NC-120-DIML3	4.0000
	R3	c-canopy	Amerlux	cntrv22-12-LED-E--WT-C-120-NF-3000-DIM	1.0000
Work station	L1		ALKCO	ARIS-21- 40-120-PRL-HWC/AJC6	2.0000
	F1	Surface-Mounted	ALKCO	TAB125-ASY-120-BA/AL-CL+LS	2.0000
	SL		BKSSL	/-BQL-LED-E22-WHP-D	2.0000
	R3	canopy	Amerlux	cntrv22-12-LED-E--WT-C-120-NF-3000-DIM	1.0000
Bathroom	S1	WALL	PHILIPS	PW01L30SAU-LED-6W-3000K-120+SG02L	2.0000
	R4		?	?	1.0000
Mech. room	S2		ADA	CSS2032-1-FC12T9-32W /835-14 1/2"-3"	1.0000
Master BR	F1	Surface-Mounted	ALKCO	TAB125-ASY-120-BA/AL-CL+LS	3.0000
Kid's BR					
	RI	LSTA4-8420-C1	USAI	3140-10-S-LSTA4-8420-C1-20W-30-30-NC-120-DIML3	2.0000
Decks	T2	canopy	Lumiere	904-12WLEDN-3000k-12-BK-NBR	9.0000
	T1	canopy	Lumiere	213-12WLEDW-3000k-12-BK-NBR	2.0000
	TF				

TEAM NAME: TEAM MASSACHUSETTS
ADDRESS: MASSART 621 HUNTINGTON AVE. BOSTON,MA 02115
CONTACT: SPENCER CULHANE 602.677.6388 SPENCER.CULHANE@4DHOME.US WWW.4DHOME.US

CONSULTANTS

EPOCH HOMES

PASSIVE HOUSE INSTITUTE US

SLADEN FEINSTEIN INTEGRATED LIGHTING

LEMESSURIER CONSULTANTS, STRUCTURAL ENGINEERS

CLIENT

U.S. DEPARTMENT OF ENERGY

SOLAR DECATHLON 2011

WWW.SOLARDECATHLON.GOV

U.S. DEPARTMENT OF ENERGY SOLAR DECATHLON

MARK	DATE	DESCRIPTION

LOT NUMBER: NA

DRAWN BY: FL

CHECKED BY: PH

COPYRIGHT: NONE: PROJECT IS PUBLIC DOMAIN

SHEET TITLE

SCHEDULES

E-603

8/12/2011 8:49:57 PM

PROJECT LOGO

TEAM NAME:	TEAM MASSACHUSETTS
ADDRESS:	MASSART 621 HUNTINGTON AVE. BOSTON MA 02115
CONTACT:	SPENCER CULHANE 602.677.6388 SPENCER.CULHANE@4DHOME.US WWW.4DHOME.US

CONSULTANTS

FANTASTIC ARCHITECTURE

AMAZING ENGINEERS

PERFECT LANDSCAPING

SAFETY FIRST CODE CONSULTANTS

CLIENT

U.S. DEPARTMENT OF ENERGY

SOLAR DECATHLON 2011

WWW.SOLARDECATHLON.GOV

MARK	DATE	DESCRIPTION

LOT NUMBER:	NA
DRAWN BY:	AUTHOR
CHECKED BY:	CHECKER
COPYRIGHT:	NONE: PROJECT IS PUBLIC DOMAIN

SHEET TITLE

OTHER DISCIPLINES (DELETE IF NOT USED)

X-001

8/12/2011 9:08:36 PM

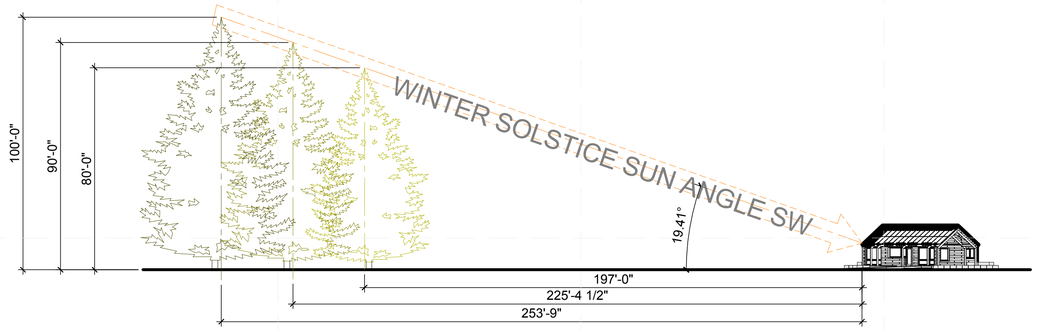

4 SOUTH WEST ELEVATION SOLAR EXPOSURE DIAGRAM
1" = 30'-0"

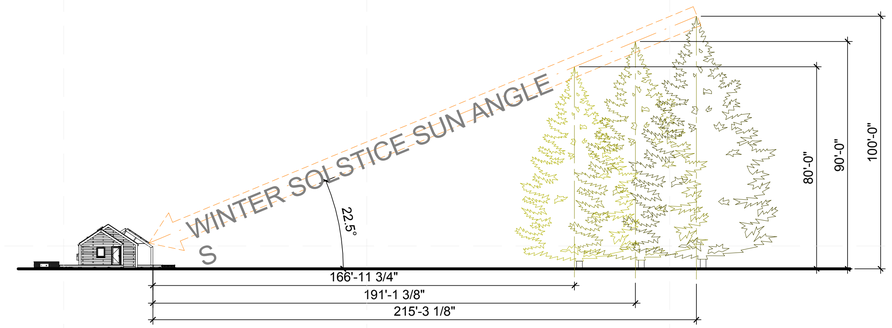

3 SOUTH ELEVATION SOLAR EXPOSURE DIAGRAM
1" = 30'-0"

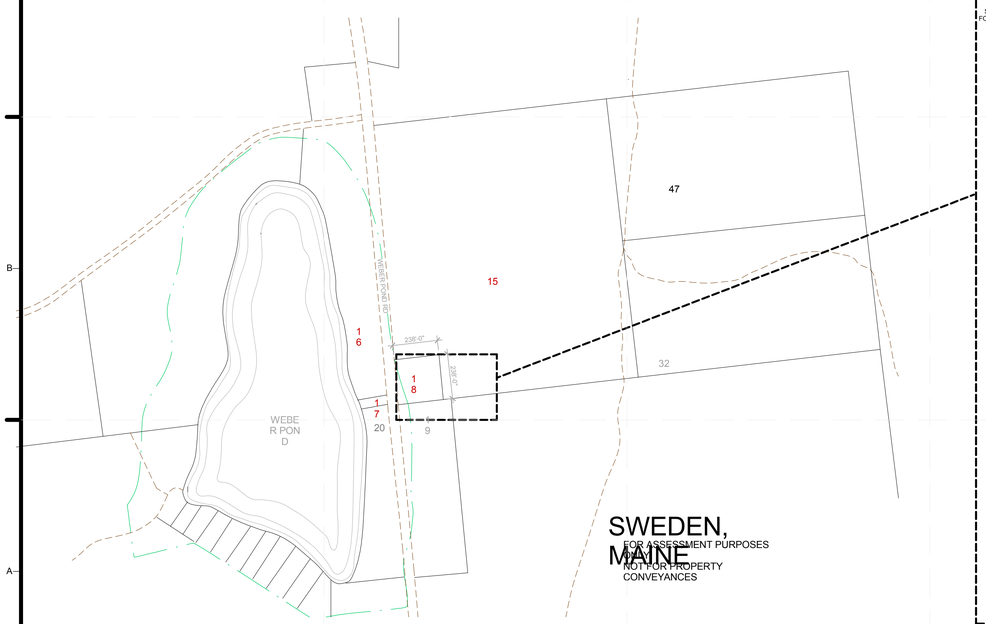

1 SWEDEN, ME PROPERTY LINES
1" = 400'-0"

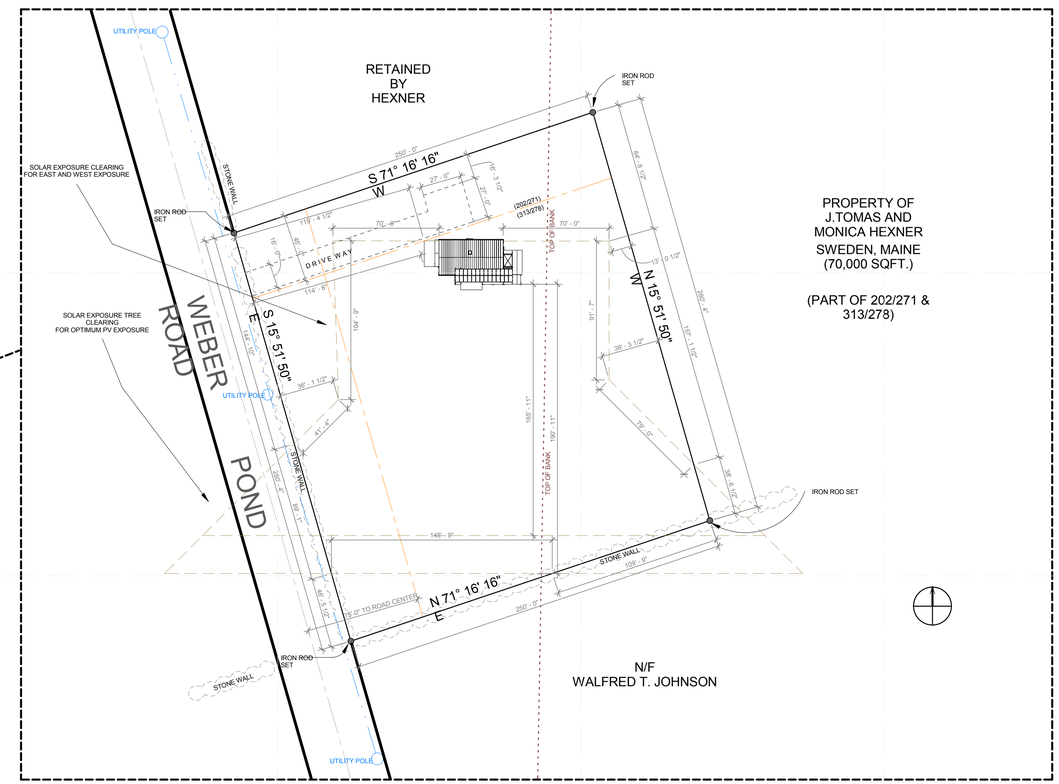

2 LOT 18 SITE PLAN
1" = 50'-0"

8/12/2011 9:08:42 PM

4D HOME

TEAM NAME:	TEAM MASSACHUSETTS
ADDRESS:	MASSART 621 HUNTINGTON AVE BOSTON MA 02115
CONTACT:	SPENCER CULHANE 602.677.6388 SPENCER.CULHANE@4DHOME.US WWW.4DHOME.US

CONSULTANTS

EPOCH HOMES
PASSIVE HOUSE INSTITUTE US
SLADEN FEINSTEIN INTEGRATED LIGHTING
LEMESSURIER CONSULTANTS, STRUCTURAL ENGINEERS

CLIENT

U.S. DEPARTMENT OF ENERGY
SOLAR DECATHLON 2011
WWW.SOLARDECATHLON.GOV

U.S. DEPARTMENT OF ENERGY SOLAR DECATHLON

MARK	DATE	DESCRIPTION

LOT NUMBER:	NA
DRAWN BY:	SC
CHECKED BY:	Checker
COPYRIGHT:	NONE: PROJECT IS PUBLIC DOMAIN

SHEET TITLE

HEXNER SITE PLAN

X-801

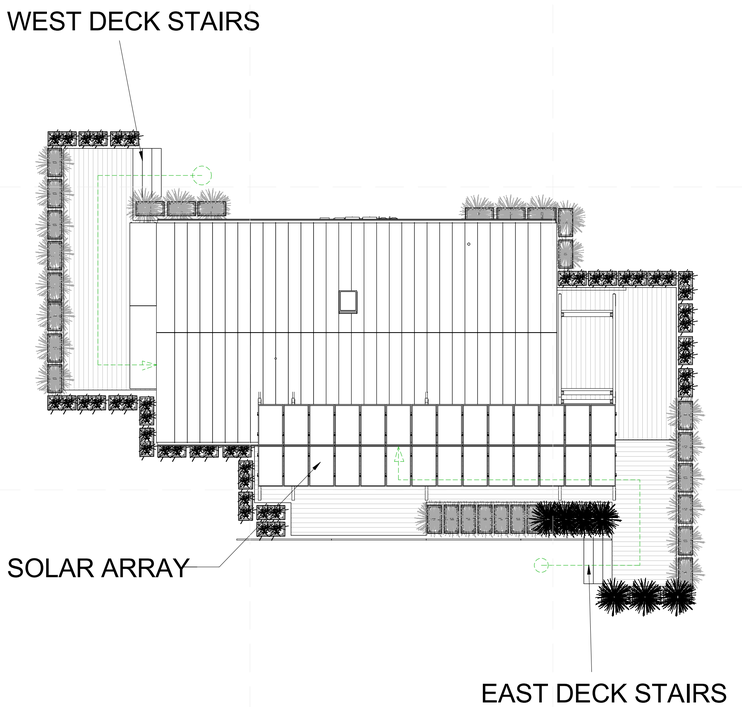

1 SITE PLAN SWEDEN ME
1/8" = 1'-0"

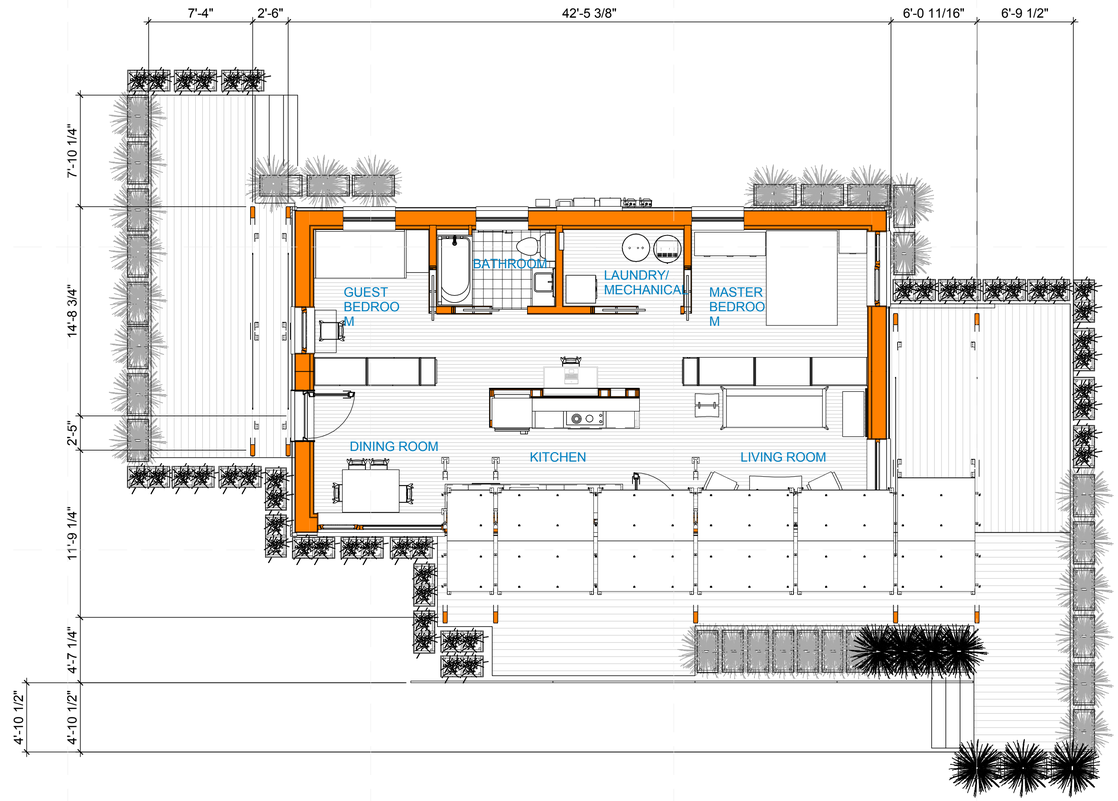

2 INTERIOR PLAN SWEDEN ME
3/16" = 1'-0"

TEAM NAME:	TEAM MASSACHUSETTS
ADDRESS:	MASSART 621 HUNTINGTON AVE. BOSTON MA 02115
CONTACT:	SPENCER CULHANE 602.677.6388 SPENCER.CULHANE@4DHOME.US WWW.4DHOME.US

CONSULTANTS

EPOCH HOMES

PASSIVE HOUSE INSTITUTE US

SLADEN FEINSTEIN INTEGRATED LIGHTING

LEMESSURIER CONSULTANTS, STRUCTURAL ENGINEERS

CLIENT

U.S. DEPARTMENT OF ENERGY

SOLAR DECATHLON 2011

WWW.SOLARDECATHLON.GOV

U.S. DEPARTMENT OF ENERGY SOLAR DECATHLON

MARK	DATE	DESCRIPTION

LOT NUMBER:	NA
DRAWN BY:	SC
CHECKED BY:	Checker
COPYRIGHT:	NONE: PROJECT IS PUBLIC DOMAIN

SHEET TITLE

ARCHITECTURAL PLANS

X-802

8/12/2011 9:09:51 PM

GENERAL CONTRACTOR/
SHOP NOTES

GENERAL SHEET NOTES

REFERENCE KEYNOTES

SHEET KEYNOTES

CONTRACTOR / SHOP

SOLAR DECATHLON

DESIGN
DEVELOPMENT

8/12/2011 9:10:05 PM

PROJECT LOGO

TEAM NAME: TEAM MASSACHUSETTS

ADDRESS: MASSART
621 HUNTINGTON AVE.
BOSTON MA 02115

CONTACT: SPENCER CULHANE 602.677.6388
SPENCER.CULHANE@4DHOME.US
WWW.4DHOME.US

CONSULTANTS

FANTASTIC ARCHITECTURE
AMAZING ENGINEERS
PERFECT LANDSCAPING
SAFETY FIRST CODE CONSULTANTS

CLIENT

U.S. DEPARTMENT OF ENERGY
SOLAR DECATHLON 2011
WWW.SOLARDECATHLON.GOV

MARK	DATE	DESCRIPTION

LOT NUMBER: NA
DRAWN BY: AUTHOR
CHECKED BY: CHECKER

COPYRIGHT: NONE: PROJECT IS PUBLIC DOMAIN

SHEET TITLE

CONTRACTOR/SHOP DRAWINGS

Z-001

TRUSS PLATE SCHEDULE

PLATE PROFILE	QUANTITY
P1P7	8
P2	4
P3	4
P4	4
P5	4
P6	4
-	-
P8	4
P9	4
P10	4
P11	4
P12	4
P13	4

TOTAL	52

GENERAL NOTES

1. ALL BOLT HOLES IN PLATES SHALL BE 13/16" DIAMETER. HOLES SHALL BE ACCURATELY ALIGNED IN PLATES.
2. 1/4" PLATE SHALL BE A MINIMUM OF 2.5" WIDE. PLATE END SHALL BE 1.25" FROM CENTER LINE OF LAST BOLT.
3. 1/4" THICK STEEL GUSSET PLATES ARE DRAWN TO SCALE.
4. PLATES ARE 1/4" THICK ASTM A 36 STEEL.

P1

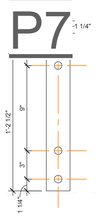

P7

P2

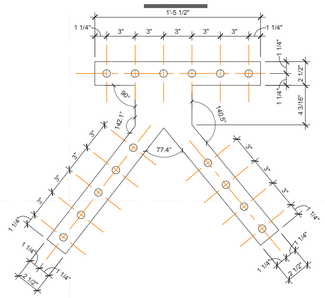

P3

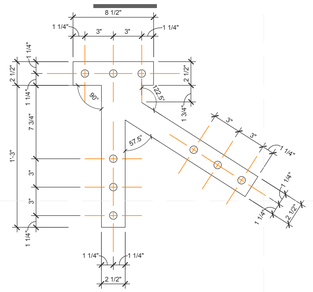

P4

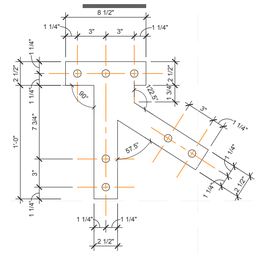

P5

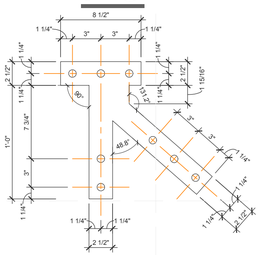

P6

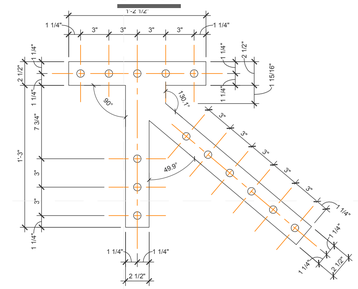

P13

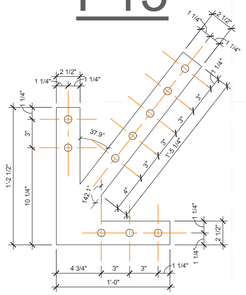

P12

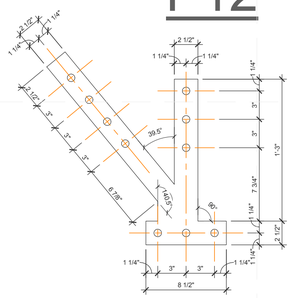

P11

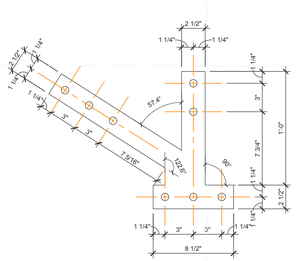

P10

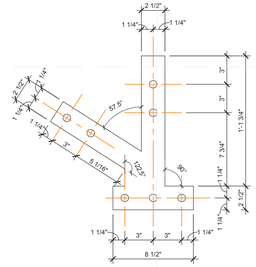

P9

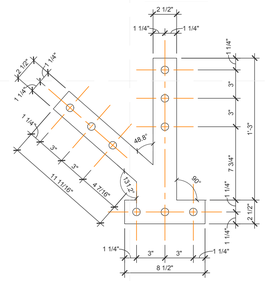

P8

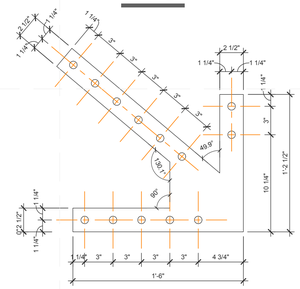

1 TRUSS PLATE PROFILES
1'-1 1/2" = 1'-0"

0 1/2" 1' 1 1/2'

8/12/2011 9:10:08 PM

4D HOME

TEAM NAME:	TEAM MASSACHUSETTS
ADDRESS:	MASSART 621 HUNTINGTON AVE. BOSTON MA 02115
CONTACT:	SPENCER CULHANE 602.677.6388 SPENCER.CULHANE@4DHOME.US WWW.4DHOME.US

CONSULTANTS

EPOCH HOMES

PASSIVE HOUSE INSTITUTE US

SLADEN FEINSTEIN INTEGRATED LIGHTING

LEMESSURIER CONSULTANTS, STRUCTURAL ENGINEERS

CLIENT

U.S. DEPARTMENT OF ENERGY

SOLAR DECATHLON 2011

WWW.SOLARDECATHLON.GOV

U.S. DEPARTMENT OF ENERGY SOLAR DECATHLON

MARK	DATE	DESCRIPTION

LOT NUMBER:	NA
DRAWN BY:	SC
CHECKED BY:	PD
COPYRIGHT:	NONE: PROJECT IS PUBLIC DOMAIN

SHEET TITLE

TRUSS PLATE SHOP DRAWINGS

Z-702

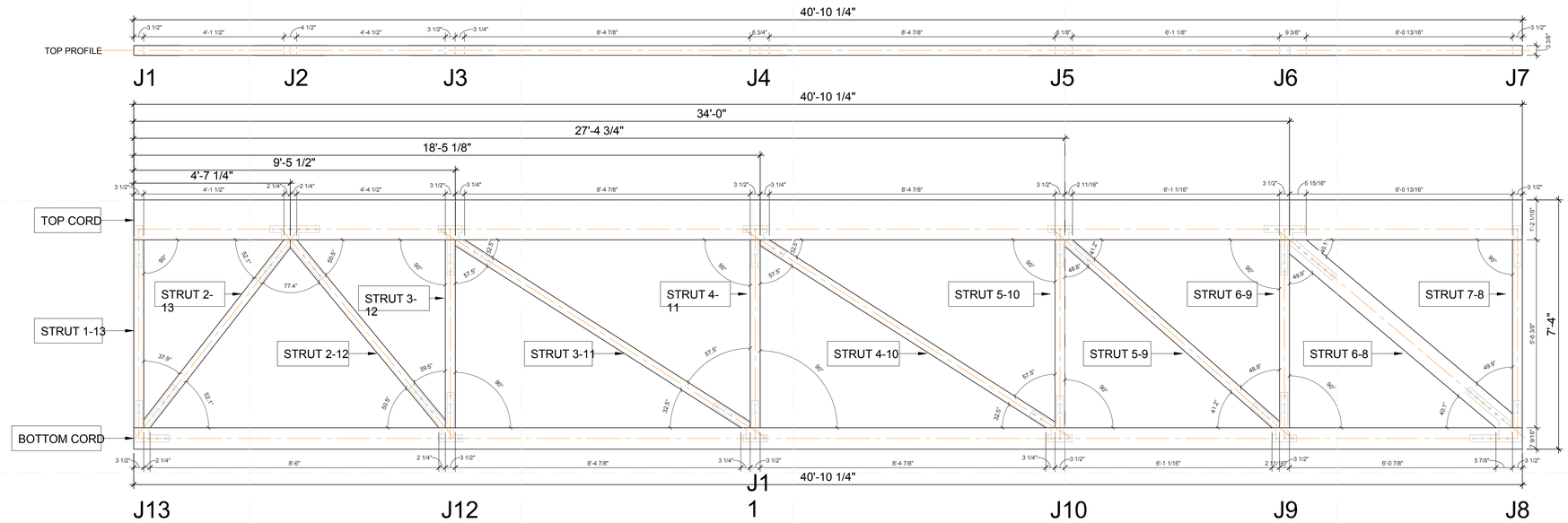

1 TRUSS PROFILE
1/2" = 1'-0"

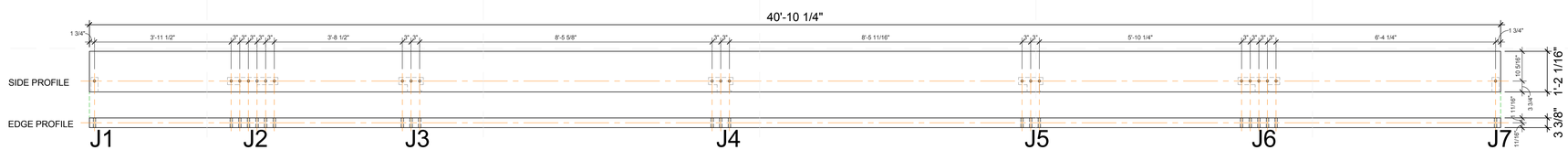

2 TOP CORD
1/2" = 1'-0"

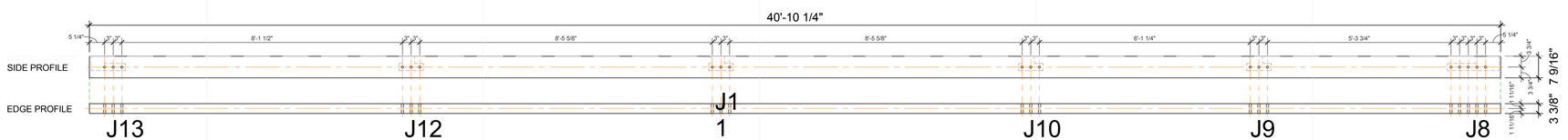

3 BOTTOM CORD
1/2" = 1'-0"

GENERAL SHEET NOTES

1. NO STRUCTURAL ELEMENTS SHALL PENETRATE THE GROUND.
2. LOCATION OF NORTHWEST SITE CORNER DICTATES LOCATION OF BUILDING.
3. ALL FOUNDATION FEET TO BE CENTERED ON GRID POINTS UNLESS OTHERWISE NOTED.

4D HOME

TEAM NAME:	TEAM MASSACHUSETTS
ADDRESS:	MASSART 621 HUNTINGTON AVE. BOSTON MA 02115
CONTACT:	SPENCER CULHANE 602.677.6388 SPENCER.CULHANE@4DHOME.US WWW.4DHOME.US

CONSULTANTS

EPOCH HOMES

PASSIVE HOUSE INSTITUTE US

SLADEN FEINSTEIN INTEGRATED LIGHTING

LEMESSURIER CONSULTANTS, STRUCTURAL ENGINEERS

CLIENT

U.S. DEPARTMENT OF ENERGY

SOLAR DECATHLON 2011

WWW.SOLARDECATHLON.GOV

U.S. DEPARTMENT OF ENERGY SOLAR DECATHLON

MARK	DATE	DESCRIPTION

LOT NUMBER:	NA
DRAWN BY:	SC
CHECKED BY:	Checker
COPYRIGHT:	NONE: PROJECT IS PUBLIC DOMAIN

SHEET TITLE

TRUSS SHOP DRAWINGS

Z-703

8/12/2011 9:10:11 PM

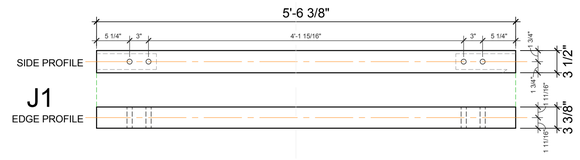

1 STRUT 1-13
1" = 1'-0"

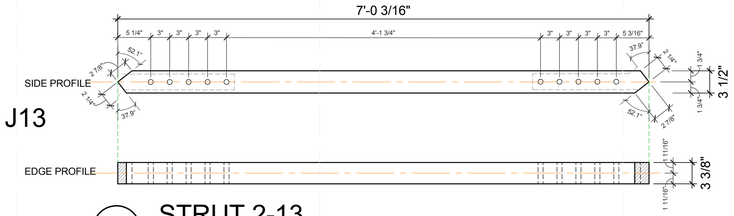

2 STRUT 2-13
1" = 1'-0"

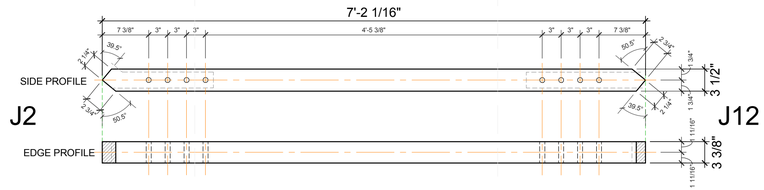

3 STRUT 2-12
1" = 1'-0"

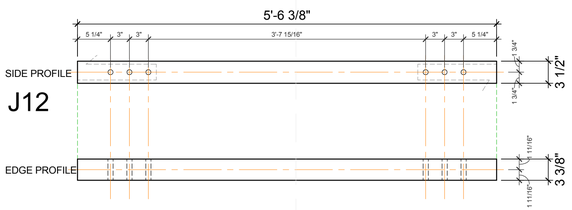

4 STRUT 3-12
1" = 1'-0"

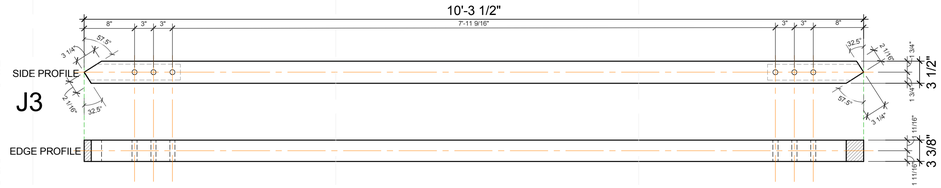

5 STRUT 3-11
1" = 1'-0"

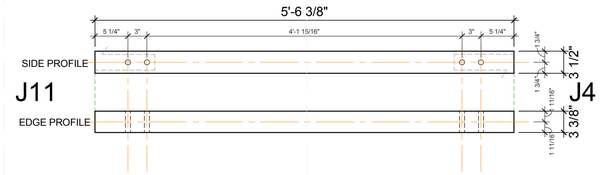

6 STRUT 4-11
1" = 1'-0"

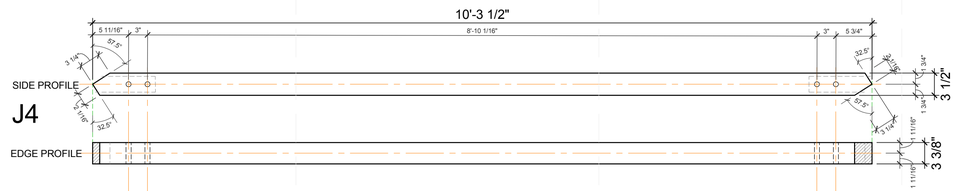

7 STRUT 4-10
1" = 1'-0"

J10

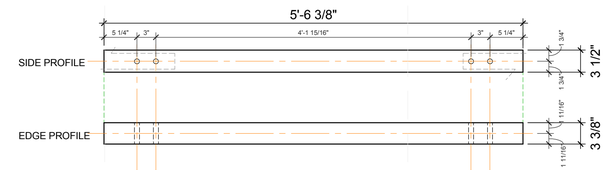

8 STRUT 5-10
1" = 1'-0"

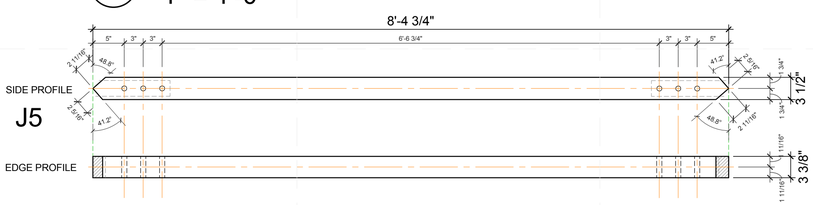

9 STRUT 5-9
1" = 1'-0"

J9

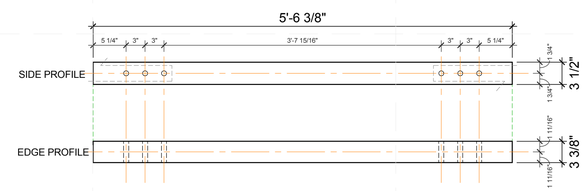

10 STRUT 6-9
1" = 1'-0"

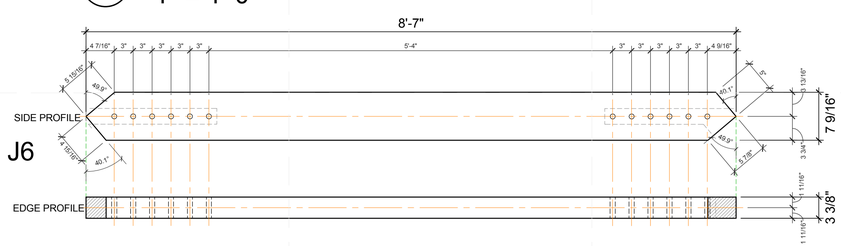

11 STRUT 6-8
1" = 1'-0"

J8

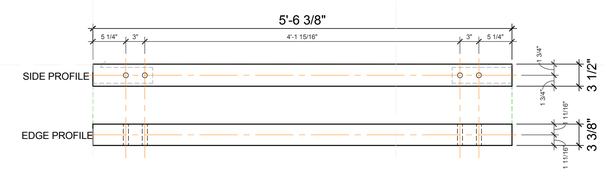

12 STRUT 7-8
1" = 1'-0"

0 1/2' 1' 2'

GENERAL SHEET NOTES

1. 1) *3/4"* BOLTS (ASTM A-307) SHALL BE PLACED IN MAXIMUM *13/16"* AND MINIMUM *25/32"* DIAMETER HOLES. HOLES SHALL BE ACCURATELY ALIGNED IN MAIN MEMBERS AND SIDE PLATES. BOLTS SHALL NOT BE FORCIBLY DRIVEN. ALL BOLTS SHALL HAVE A FULL NUT WITH FULL THREAD CONTA CT. DO NOT OVER TIGHTEN BOLTS. TIGHTEN BOLTS TO SNUG FIT PLUS QUATER TURN MAXIMUM.
2. THIS TRUSS HAS BEEN CHECKED FOR UNIFORM ROOF LIVE LOAD ONLY, EXCEPT AS NOTED.
3. WIND: ASCE 7-05; 120MPH; TCDL=6.0PSF; BCDL=6.0PSF; H=25FT; CAT. IT; EXP C; ENCLOSED; MWFRS (LOW-RISE); LUMBER DOL=1 .60 PLATE GRIP DOL=1 .60
4. PROVIDE MECHANICAL CONNECTION (BY OTHERS) OF TRUSS TO BEARING PLATE CAPABLE OF WITHSTANDING 1862 IB UPLIFT AT JOINT 13 AND 1862 IB UPLIFT AT JOINT 8.
5. THIS TRUSS IS DESIGNED IN ACCORDANCE WITH THE 2009 INTERNATIONAL BUILDING CODE.
6. *3/4"* BOLTS SHALL BE SPACED AT 3" C/C IN A ROW. END DISTANCE SHALL BE 5.25" FROM CENTER LINE OF LAST BOLT TO END OF MEMBER. *1/4"* PLATE SHALL BE A MINIMUM OF 2.5" WIDE. PLATE END SHALL BE 1.25" FROM CENTER LINE OF LAST BOLT. CENTER LINE OF BOLTS IN THE TOP CHORD AND BOTTOM CHORD SHALL BE 3.75 UP FROM THE BOTTOM EDGE OF THE TOP AND BOTTOM CHORDS. CENTER LINE OF BOLTS IN ALL WEBS AND END VERTICALS SHALL BE CENTER LINE OF THE MEMBERS. *1/4"* THICK STEEL GUSSET PLATES ARE DRAWN TO SCALE.

8/12/2011 9:10:15 PM

4D HOME

TEAM NAME:	TEAM MASSACHUSETTS
ADDRESS:	MASSART 621 HUNTINGTON AVE. BOSTON MA 02115
CONTACT:	SPENCER CULHANE 602.677.6388 SPENCER.CULHANE@4DHOME.US WWW.4DHOME.US

CONSULTANTS

EPOCH HOMES

PASSIVE HOUSE INSTITUTE US

SLADEN FEINSTEIN INTEGRATED LIGHTING

LEMESSURIER CONSULTANTS, STRUCTURAL ENGINEERS

CLIENT

U.S. DEPARTMENT OF ENERGY

SOLAR DECATHLON 2011

WWW.SOLARDECATHLON.GOV

U.S. DEPARTMENT OF ENERGY SOLAR DECATHLON

MARK	DATE	DESCRIPTION

LOT NUMBER:	NA
DRAWN BY:	SC
CHECKED BY:	Checker
COPYRIGHT:	NONE: PROJECT IS PUBLIC DOMAIN

SHEET TITLE

TRUSS CUTLIST

Z-704

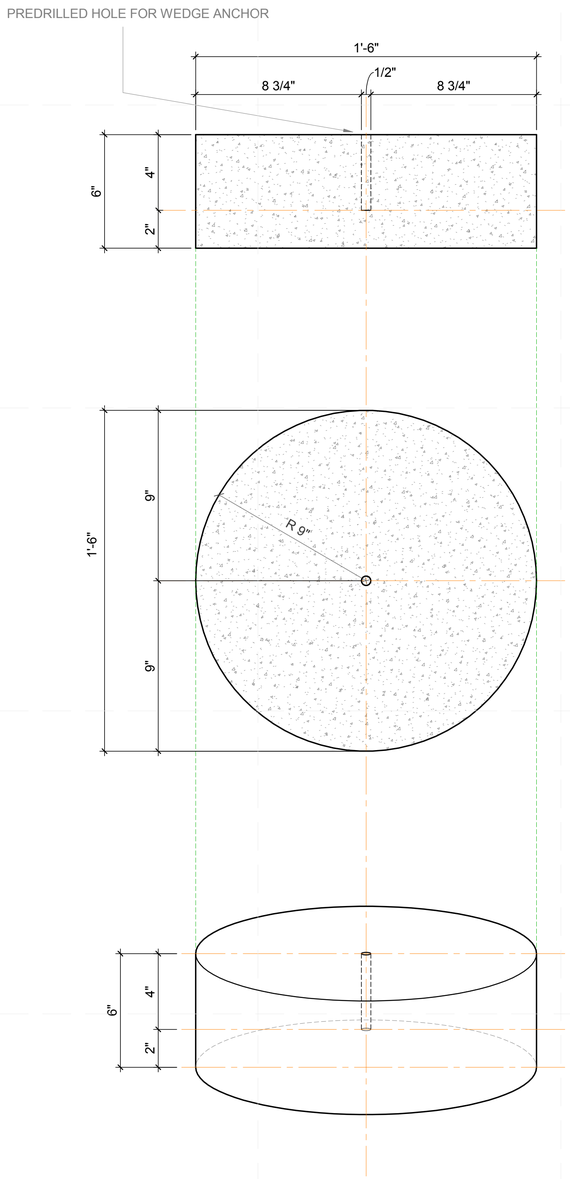

1 DECK FOOTING SINGLE ANCHOR
3" = 1'-0"

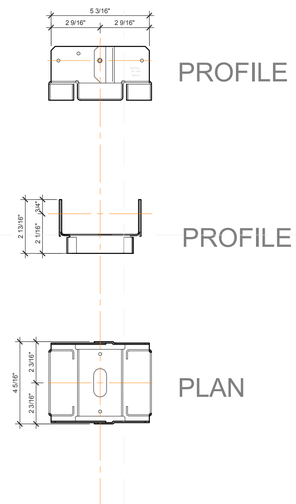

3 SIMPSON STRONG TIE ABA 46Z
3" = 1'-0"

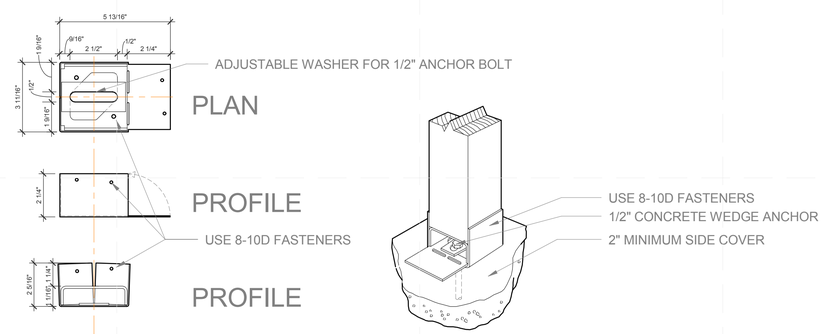

2 SIMPSON STRONG TIE AB44
3" = 1'-0"

SIMPSON DECK HARDWARE SCHEDULE

SIMPSON STRONG TIE MODEL #	QUANTITY	CONCRETE ANCHOR DIAMETER	FASTENER TYPE
ABA 46	9	5/8"	SD STRUCTURAL SCREW
AB 44	39	1/2"	8-10D NAIL

CONCRETE FOOTING SCHEDULE

CONCRETE FOOTING TYPE	QUANTITY	DIMENSIONS
5/8" ANCHOR	9	H:6" X D:18"
1/2" ANCHOR	39	H:6" X D:18"

GENERAL SHEET NOTES

1. HOLES DRILLED IN CONCRETE TO BE ADMINISTERED USING A CARBIDE TIPPED MASONRY DRILL BIT CONFORMING TO ANSI B94, 12-77.
2. DRILL HOLES AT SAME DIAMETER AS WEDGE ANCHOR.
3. ALL HOLES TO BE DRILLED AT CENTER POINT OF FOUNDATION UNLESS OTHERWISE NOTED.
4. CONCRETE FOOTING TYPES VARY BY PRE- DRILLED ANCHOR HOLE DIAMETER ONLY.

TEAM NAME: TEAM MASSACHUSETTS
ADDRESS: MASSART 621 HUNTINGTON AVE. BOSTON MA 02115
CONTACT: SPENCER CULHANE 602.677.6388 SPENCER.CULHANE@4DHOME.US WWW.4DHOME.US

CONSULTANTS

EPOCH HOMES
PASSIVE HOUSE INSTITUTE US
SLADEN FEINSTEIN INTEGRATED LIGHTING
LEMESSURIER CONSULTANTS, STRUCTURAL ENGINEERS

CLIENT

U.S. DEPARTMENT OF ENERGY
SOLAR DECATHLON 2011
WWW.SOLARDECATHLON.GOV

MARK	DATE	DESCRIPTION

LOT NUMBER:	NA
DRAWN BY:	SC
CHECKED BY:	Checker
COPYRIGHT:	NONE: PROJECT IS PUBLIC DOMAIN

SHEET TITLE

DECK FOOTING SHOP DRAWINGS

Z-705

8/12/2011 9:10:19 PM

TEAM NAME:	TEAM MASSACHUSETTS
ADDRESS:	MASSART 621 HUNTINGTON AVE. BOSTON MA 02115
CONTACT:	SPENCER CULHANE 602.677.6388 SPENCER.CULHANE@4DHOME.US WWW.4DHOME.US

CONSULTANTS

EPOCH HOMES

PASSIVE HOUSE INSTITUTE US

SLADEN FEINSTEIN INTEGRATED LIGHTING

LEMESSURIER CONSULTANTS, STRUCTURAL ENGINEERS

CLIENT

U.S. DEPARTMENT OF ENERGY

SOLAR DECATHLON 2011

WWW.SOLARDECATHLON.GOV

MARK	DATE	DESCRIPTION

LOT NUMBER:	NA
DRAWN BY:	Author
CHECKED BY:	Checker
COPYRIGHT:	NONE: PROJECT IS PUBLIC DOMAIN

SHEET TITLE

TRUSS DETAILS

Z-707

8/12/2011 9:10:21 PM

TRELLIS PLATE SCHEDULE

PLATE PROFILE	QUANTITY
KP	22
RP	4

3 TRELLIS PLATE SCHEDULE
12" = 1'-0"

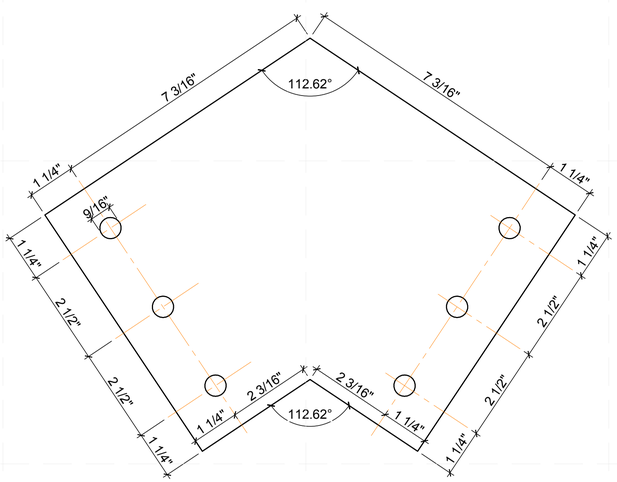

2 RP PROFILE
6" = 1'-0"

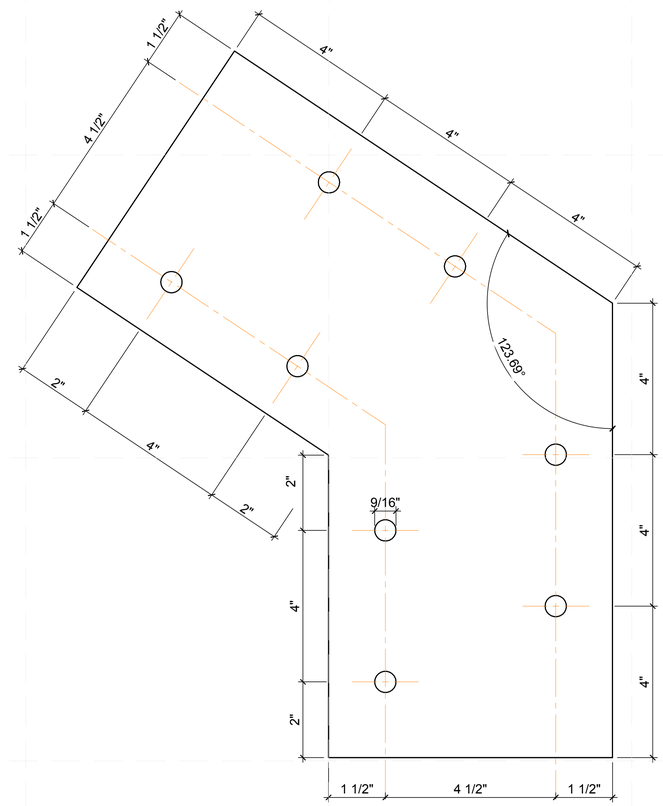

1 KP PROFILE
6" = 1'-0"

GENERAL NOTES

1. ALL BOLT HOLES IN PLATES SHALL BE 9/16" DIAMETER. HOLES SHALL BE ACCURATELY ALIGNED IN PLATES.
2. 1/4" PLATE SHALL BE A MINIMUM OF 2.5" WIDE.
3. 1/4" THICK STEEL GUSSET PLATES ARE DRAWN TO SCALE.
4. PLATES ARE 1/4" THICK ASTM A 36 STEEL.

TEAM NAME: TEAM MASSACHUSETTS
ADDRESS: MASSART 621 HUNTINGTON AVE. BOSTON MA 02115
CONTACT: SPENCER CULHANE 602.677.6388 SPENCER.CULHANE@4DHOME.US WWW.4DHOME.US

CONSULTANTS

EPOCH HOMES
PASSIVE HOUSE INSTITUTE US
SLADEN FEINSTEIN INTEGRATED LIGHTING
LEMESSURIER CONSULTANTS, STRUCTURAL ENGINEERS

CLIENT
U.S. DEPARTMENT OF ENERGY
SOLAR DECATHLON 2011
WWW.SOLARDECATHLON.GOV

MARK	DATE	DESCRIPTION

LOT NUMBER: NA
DRAWN BY: SC
CHECKED BY: PD
COPYRIGHT: NONE: PROJECT IS PUBLIC DOMAIN

SHEET TITLE
TRELLIS PLATE SHOP DRAWINGS

Z-708

8/12/2011 9:10:23 PM

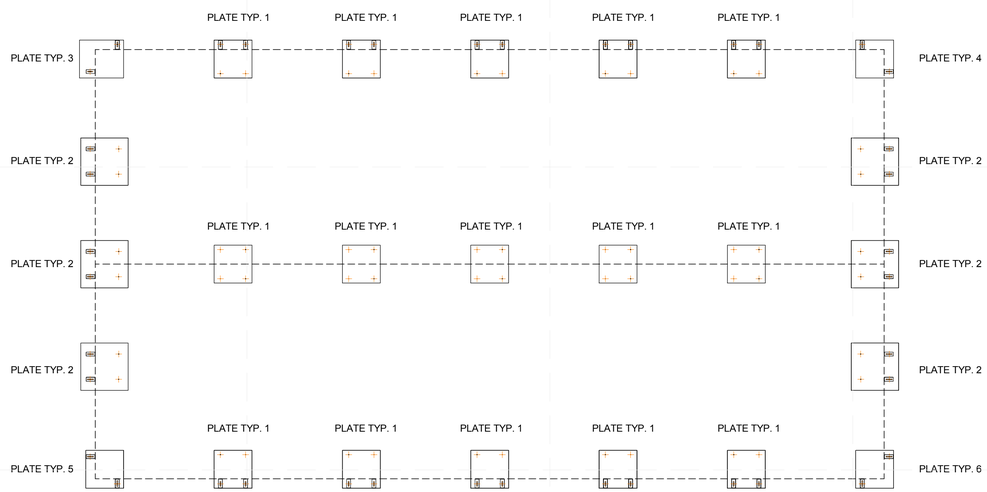

2 STEEL FOOTING DISTRIBUTION
1/4" = 1'-0"

STEEL PLATE SCHEDULE		
TYPE	COUNT	DIMENSION
PLATE TYP. 1	15	2' X 2' X 1/2"
PLATE TYP. 2	6	2'-6" X 2'-6" X 1/2"
PLATE TYP. 3	1	2' X 2'-4" X 1/2"
PLATE TYP. 4	1	2' X 2' X 1/2"
PLATE TYP. 5	1	2' X 2' X 1/2"
PLATE TYP. 6	1	2' X 2' X 1/2"
SLOTTED L BRACKET	40	5 3/4"X 5 3/4" X 2 1/2"

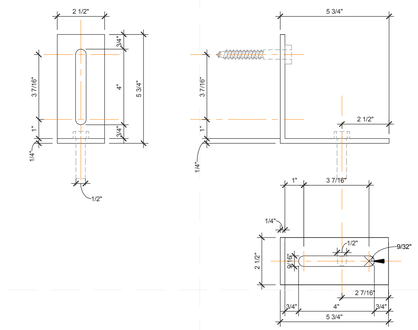

5 SLOTTED L BRACKET
3" = 1'-0"

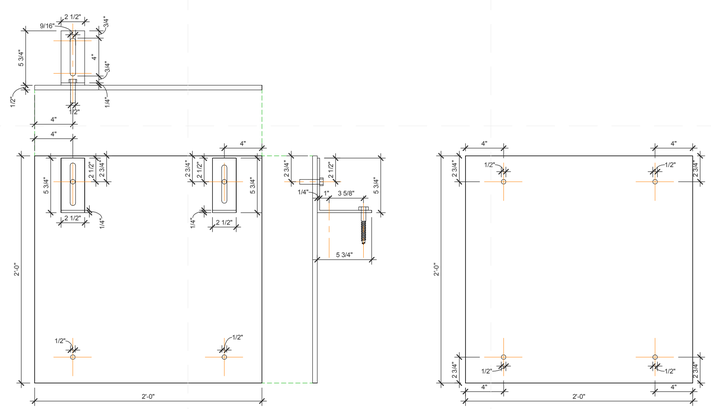

3 STEEL PLATE TYPE 1
1 1/2"
1'-0"

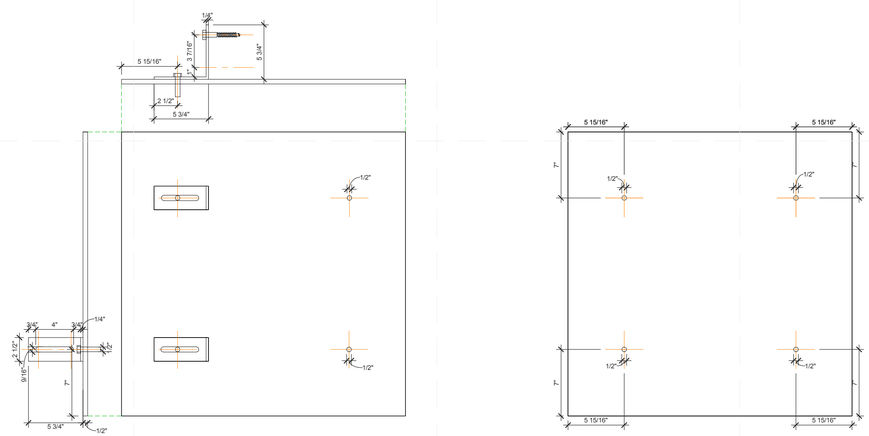

4 STEEL PLATE TYPE 2
1 1/2"
1'-0"

NOTES:
SLOTTED L BRACKET W 5 3/4"X H 5 3/4" L 2 1/2"
FASTENED TO STEEL PLATE WITH 1/2" BOLTS

PLATE HOLES DRILLED AND TAPPED FOR 1/2" BOLTS

8/12/2011 9:10:26 PM

4D HOME

TEAM NAME:	TEAM MASSACHUSETTS
ADDRESS:	MASSART 621 HUNTINGTON AVE BOSTON MA 02115
CONTACT:	SPENCER CULHANE 602.677.6388 SPENCER.CULHANE@4DHOME.US WWW.4DHOME.US

CONSULTANTS

EPOCH HOMES
PASSIVE HOUSE INSTITUTE US
SLADEN FEINSTEIN INTEGRATED LIGHTING
LEMESSURIER CONSULTANTS, STRUCTURAL ENGINEERS

CLIENT

U.S. DEPARTMENT OF ENERGY
SOLAR DECATHLON 2011
WWW.SOLARDECATHLON.GOV

U.S. DEPARTMENT OF ENERGY SOLAR DECATHLON

MARK	DATE	DESCRIPTION

LOT NUMBER:	NA
DRAWN BY:	FL
CHECKED BY:	SC
COPYRIGHT:	NONE: PROJECT IS PUBLIC DOMAIN

SHEET TITLE

STEEL PLATE FOOTINGS

Z-709

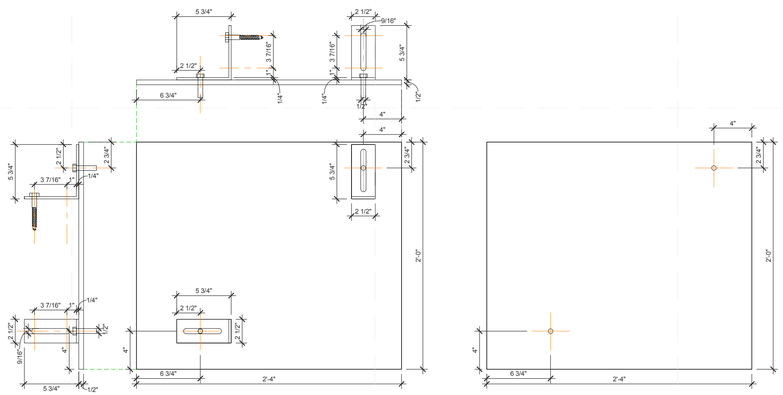

3 STEEL_PLATE TYPE 3
1 1/2" = 1'-0"

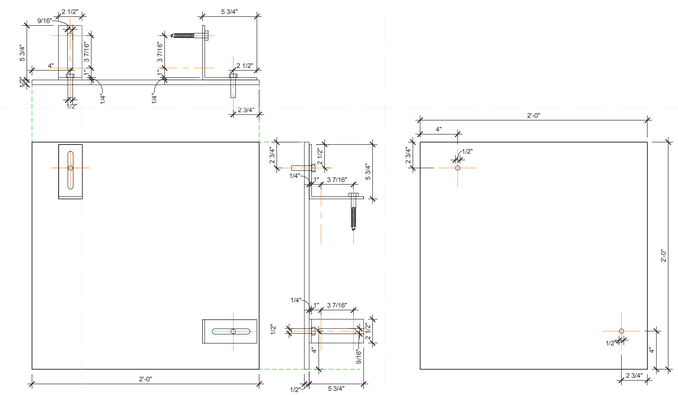

2 STEEL_PLATE TYPE. 4
1 1/2" = 1'-0"

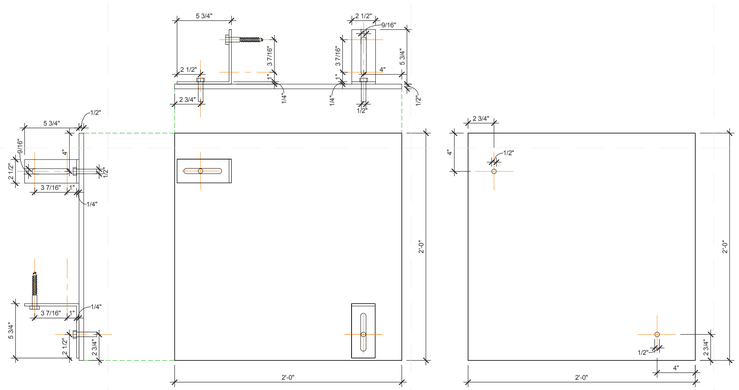

1 STEEL_PLATE TYP. 5
1 1/2" = 1'-0"

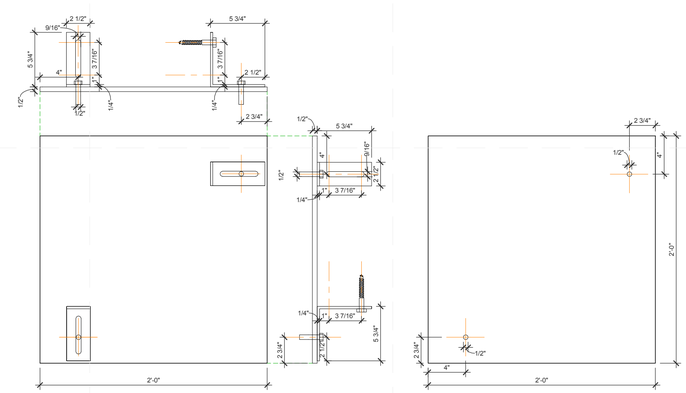

4 STEEL_PLATE TYP. 6
1 1/2" = 1'-0"

NOTES:
SLOTTED L BRACKET W 5 3/4"X H 5 3/4" L 2 1/2"
FASTENED TO STEEL PLATE WITH 1/2" BOLTS

PLATE HOLES DRILLED AND TAPPED FOR 1/2" BOLTS

8/12/2011 9:10:23 PM

4D HOME

TEAM NAME:	TEAM MASSACHUSETTS
ADDRESS:	MASSART 621 HUNTINGTON AVE. BOSTON MA 02115
CONTACT:	SPENCER CULHANE 602.677.6388 SPENCER.CULHANE@4DHOME.US WWW.4DHOME.US

CONSULTANTS

EPOCH HOMES
PASSIVE HOUSE INSTITUTE US
SLADEN FEINSTEIN INTEGRATED LIGHTING
LEMESSURIER CONSULTANTS, STRUCTURAL ENGINEERS

CLIENT

U.S. DEPARTMENT OF ENERGY
SOLAR DECATHLON 2011
WWW.SOLARDECATHLON.GOV

U.S. DEPARTMENT OF ENERGY SOLAR DECATHLON

MARK	DATE	DESCRIPTION

LOT NUMBER:	NA
DRAWN BY:	FL
CHECKED BY:	SC
COPYRIGHT:	NONE: PROJECT IS PUBLIC DOMAIN

SHEET TITLE

STEEL PLATE FOOTINGS

Z-710

TRELLIS BRACKET SCHEDULE		
TYPE	COUNT	DIMENSION
1	4	3 1/2" X 4 3/4"
2	4	3 1/2" X 3 1/2"

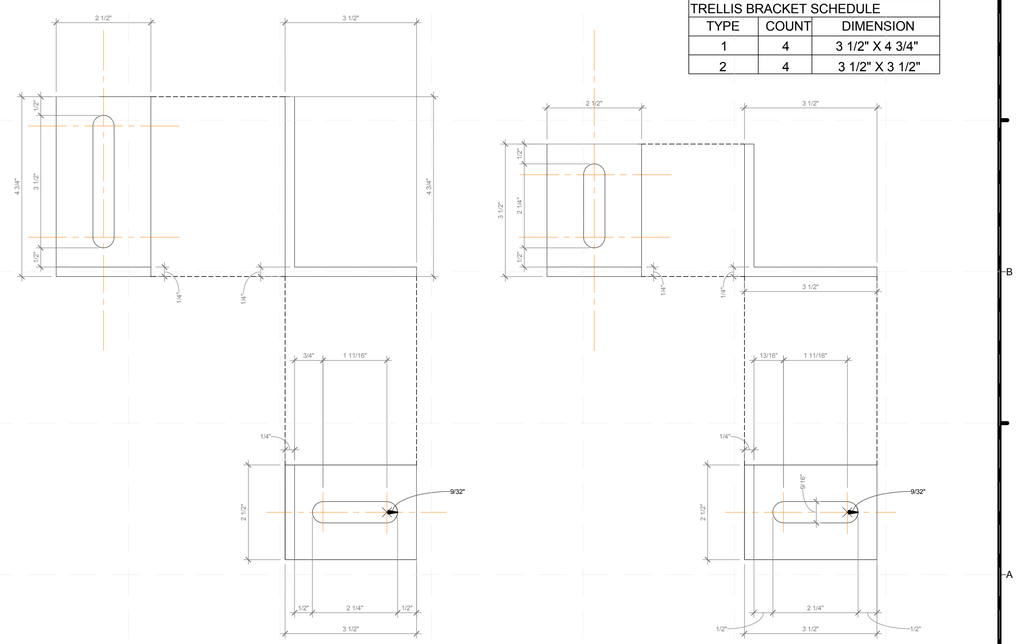

1 SLOTTED L BRACKET AT TRELLIS
6" = 1'-0"

8/12/2011 9:10:30 PM

TEAM NAME:
TEAM MASSACHUSETTS
ADDRESS:
MASSART
621 HUNTINGTON AVE.
BOSTON MA 02115
CONTACT:
SPENCER CULHANE 602.677.6388
SPENCER.CULHANE@4DHOME.US
ISSUE DATE: WWW.4DHOME.US

U.S. DEPARTMENT OF ENERGY
SOLAR DECATHLON 2011
WWW.SOLARDECATHLON.GOV

LOT NUMBER: NA
DRAWN BY: FL
CHECKED BY: SC
COPYRIGHT: NONE: PROJECT IS PUBLIC DOMAIN

CD SHEET REFERENCE

Z-711

TEAM NAME:	TEAM MASSACHUSETTS
ADDRESS:	MASSART 621 HUNTINGTON AVE BOSTON MA 02115
CONTACT:	SPENCER CULHANE 602.677.6388 SPENCER.CULHANE@4DHOME.US

CONSULTANTS

EPOCH HOMES

PASSIVE HOUSE INSTITUTE US

SLADEN FEINSTEIN INTEGRATED LIGHTING

LEMESSURIER CONSULTANTS, STRUCTURAL ENGINEERS

CLIENT

U.S. DEPARTMENT OF ENERGY

SOLAR DECATHLON 2011

WWW.SOLARDECATHLON.GOV

MARK	DATE	DESCRIPTION

LOT NUMBER:	NA
DRAWN BY:	Author
CHECKED BY:	Checker
COPYRIGHT:	NONE: PROJECT IS PUBLIC DOMAIN

SHEET TITLE

Unnamed

Z-712

8/12/2011 9:10:32 PM

GENERAL OPERATIONS NOTES

OPERATIONS
SOLAR DECATHLON
CONSTRUCTION DOCUMENTS

8/12/2011 8:59:52 PM

TEAM NAME: TEAM MASSACHUSETTS

ADDRESS: MASSART
621 HUNTINGTON AVE.
BOSTON MA 02115

CONTACT: SPENCER CULHANE 602.677.6388
SPENCER.CULHANE@4DHOME.US
WWW.4DHOME.US

CONSULTANTS

EPOCH HOMES

PASSIVE HOUSE INSTITUTE US

SLADEN FEINSTEIN INTEGRATED LIGHTING

LEMESSURIER CONSULTANTS, STRUCTURAL ENGINEERS

CLIENT

U.S. DEPARTMENT OF ENERGY

SOLAR DECATHLON 2011

WWW.SOLARDECATHLON.GOV

MARK	DATE	DESCRIPTION

LOT NUMBER:	NA
DRAWN BY:	SC_FL_EC
CHECKED BY:	PH
COPYRIGHT:	NONE: PROJECT IS PUBLIC DOMAIN

SHEET TITLE

OPERATIONS SYMBOLS AND NOTES

O-001

1 TRELLIS WEST ELEVATION
3" = 1'-0"

8/12/2011 9:01:36 PM

TEAM NAME:	TEAM MASSACHUSETTS
ADDRESS:	MASSART 621 HUNTINGTON AVE. BOSTON MA 02115
CONTACT:	SPENCER CULHANE 602.677.6388 SPENCER.CULHANE@4DHOME.US WWW.4DHOME.US

CONSULTANTS

EPOCH HOMES

PASSIVE HOUSE INSTITUTE US

SLADEN FEINSTEIN INTEGRATED LIGHTING

LEMESSURIER CONSULTANTS, STRUCTURAL ENGINEERS

CLIENT

U.S. DEPARTMENT OF ENERGY

SOLAR DECATHLON 2011

WWW.SOLARDECATHLON.GOV

MARK	DATE	DESCRIPTION

LOT NUMBER:	NA
DRAWN BY:	Author
CHECKED BY:	Checker
COPYRIGHT:	NONE: PROJECT IS PUBLIC DOMAIN

SHEET TITLE

SOLAR EXPOSURE

O-1000

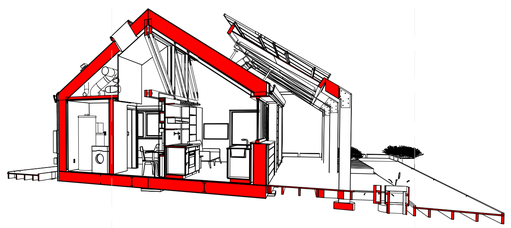

1 LIVING ROOM PERSPECTIVE 2

TEAM NAME:	TEAM MASSACHUSETTS
ADDRESS:	MASSART 621 HUNTINGTON AVE. BOSTON MA 02115
CONTACT:	SPENCER CULHANE 602.677.6388 SPENCER.CULHANE@4DHOME.US WWW.4DHOME.US

CONSULTANTS

EPOCH HOMES

PASSIVE HOUSE INSTITUTE US

SLADEN FEINSTEIN INTEGRATED LIGHTING

LEMESSURIER CONSULTANTS, STRUCTURAL ENGINEERS

CLIENT

U.S. DEPARTMENT OF ENERGY

SOLAR DECATHLON 2011

WWW.SOLARDECATHLON.GOV

MARK	DATE	DESCRIPTION

LOT NUMBER:	NA
DRAWN BY:	Author
CHECKED BY:	Checker
COPYRIGHT:	NONE: PROJECT IS PUBLIC DOMAIN

SHEET TITLE

section_perspective

O-1001

8/12/2011 9:01:48 PM

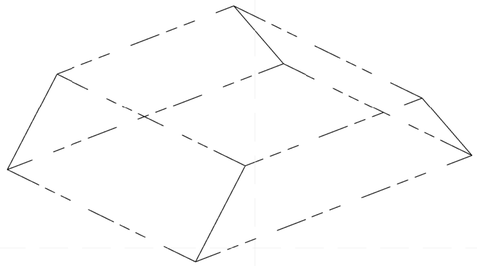

D1 SURVEY AND SET DATUM

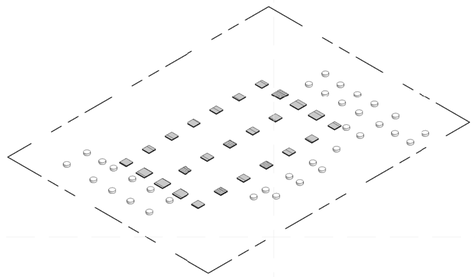

D3 SET GROUND COVER AND FOOTINGS

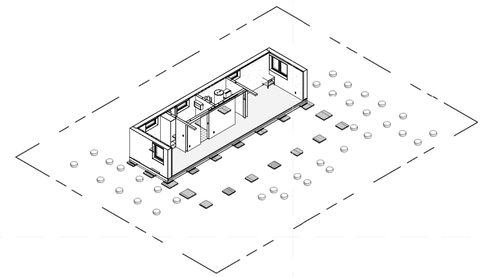

D5 PLACE AND LEVEL MODULE A

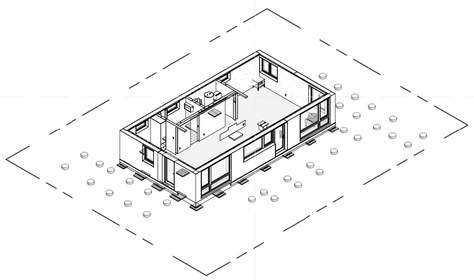

C1 PLACE AND LEVEL MODULE B

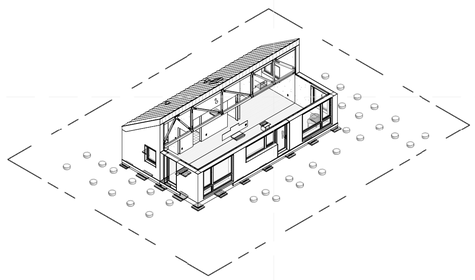

C3 PLACE AND LEVEL MODULE C

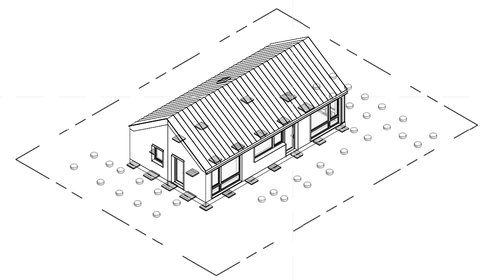

C5 PLACE AND LEVEL MODULE D

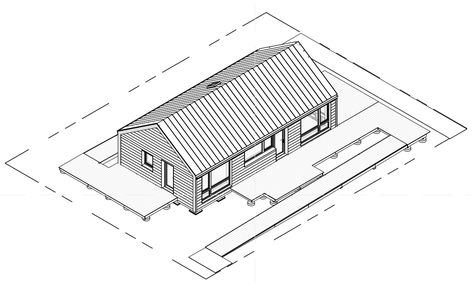

A1 INSTALL DECK AND RAINSCREEN

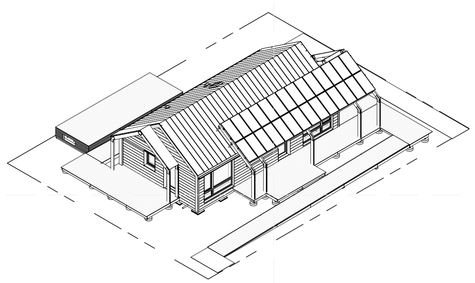

A3 INSTALL TRELLIS, PV, AND ALL M.E.P. SYSTEMS

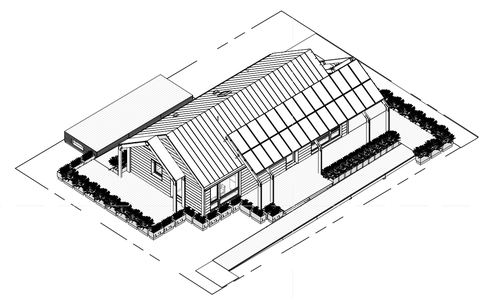

A5 ASSEMBLE LANDSCAPING AND INTERIOR COMPONENTS

GENERAL SHEET NOTES

1. ASSEMBLY AND DISASSEMBLY SEQUENCE DIAGRAMS ARE PROVIDED FOR ILLUSTRATIVE PURPOSE REGARDING ONE POTENTIAL INSTALLATION INSTALLATION SEQUENCE. THE CONTRACTOR SHALL DEVELOP A CONSTRUCTION AND DECONSTRUCTION SEQUENCE THAT COMPLIES WITH SAFE OPERATIONS AND THE MEANS AND METHODS NECESSARY FOR SUCCESSFUL CONSTRUCTION AS OUTLINED IN THE DOCUMENTS AND SPECIFICATION.

REFERENCE KEYNOTES

SHEET KEYNOTES

TEAM NAME: TEAM MASSACHUSETTS

ADDRESS: MASSART 621 HUNTINGTON AVE. BOSTON MA 02115

CONTACT: SPENCER CULHANE 602.677.6388 SPENCER.CULHANE@4DHOME.US WWW.4DHOME.US

CONSULTANTS

EPOCH HOMES

PASSIVE HOUSE INSTITUTE US

SLADEN FEINSTEIN INTEGRATED LIGHTING

LEMESSURIER CONSULTANTS, STRUCTURAL ENGINEERS

CLIENT

U.S. DEPARTMENT OF ENERGY

SOLAR DECATHLON 2011

WWW.SOLARDECATHLON.GOV

MARK	DATE	DESCRIPTION

LOT NUMBER:	NA
DRAWN BY:	SC
CHECKED BY:	PH
COPYRIGHT:	NONE: PROJECT IS PUBLIC DOMAIN

SHEET TITLE

O-101

8/12/2011 9:01:15 PM

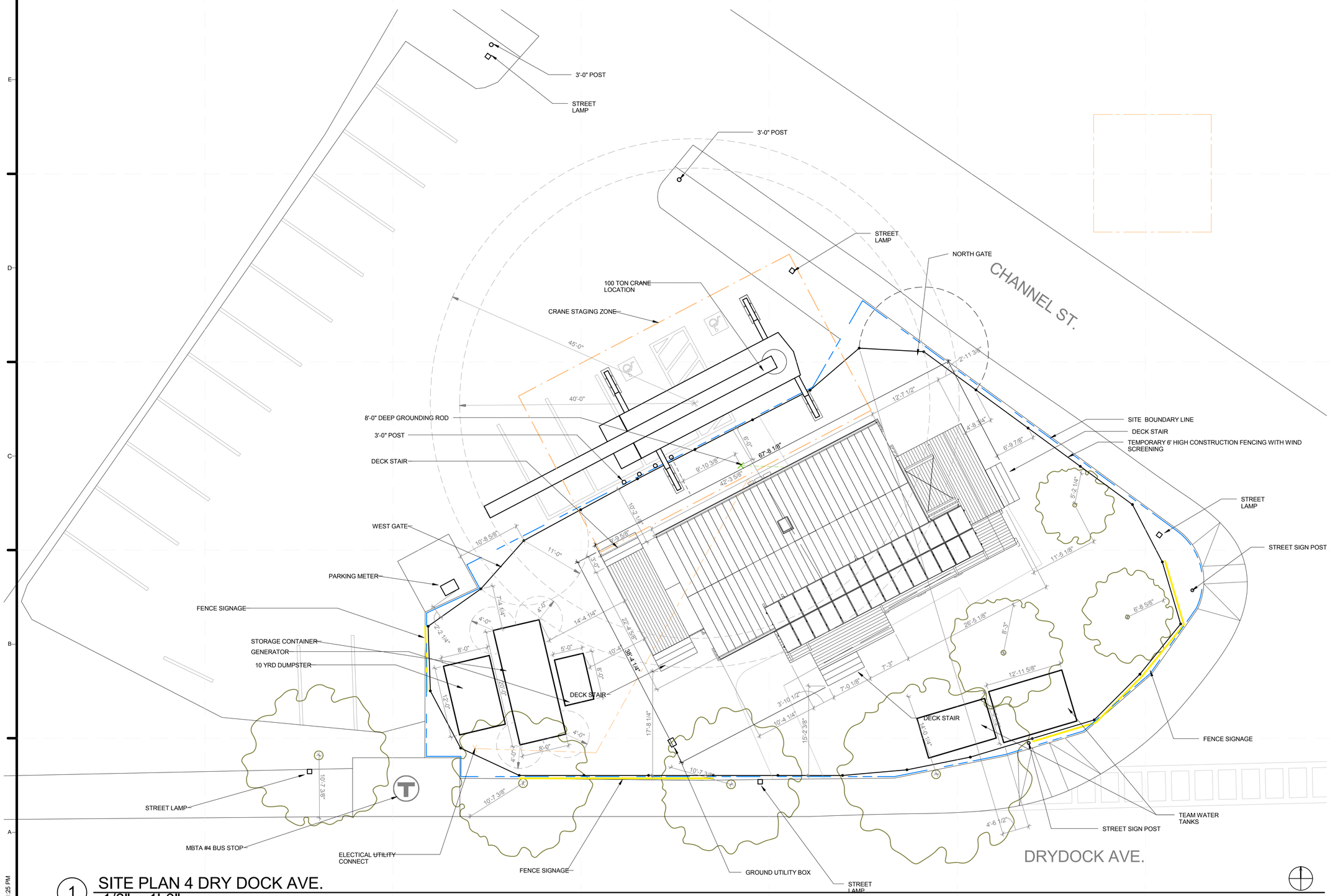

1 SITE PLAN 4 DRY DOCK AVE.
1/8" = 1'-0"

8/12/2011 9:01:25 PM

TEAM NAME:	TEAM MASSACHUSETTS
ADDRESS:	MASSART 621 HUNTINGTON AVE. BOSTON MA 02115
CONTACT:	SPENCER CULHANE 602.677.6388 SPENCER.CULHANE@4DHOME.US

CONSULTANTS

EPOCH HOMES
PASSIVE HOUSE INSTITUTE US
SLADEN FEINSTEIN INTEGRATED LIGHTING
LEMESSURIER CONSULTANTS, STRUCTURAL ENGINEERS

CLIENT

U.S. DEPARTMENT OF ENERGY
SOLAR DECATHLON 2011
WWW.SOLARDECATHLON.GOV

U.S. DEPARTMENT OF ENERGY SOLAR DECATHLON

MARK	DATE	DESCRIPTION

LOT NUMBER:	NA
DRAWN BY:	SC
CHECKED BY:	PD
COPYRIGHT:	NONE: PROJECT IS PUBLIC DOMAIN

SHEET TITLE

DRY DOCK AVE. SITE OPERATIONS

O-105

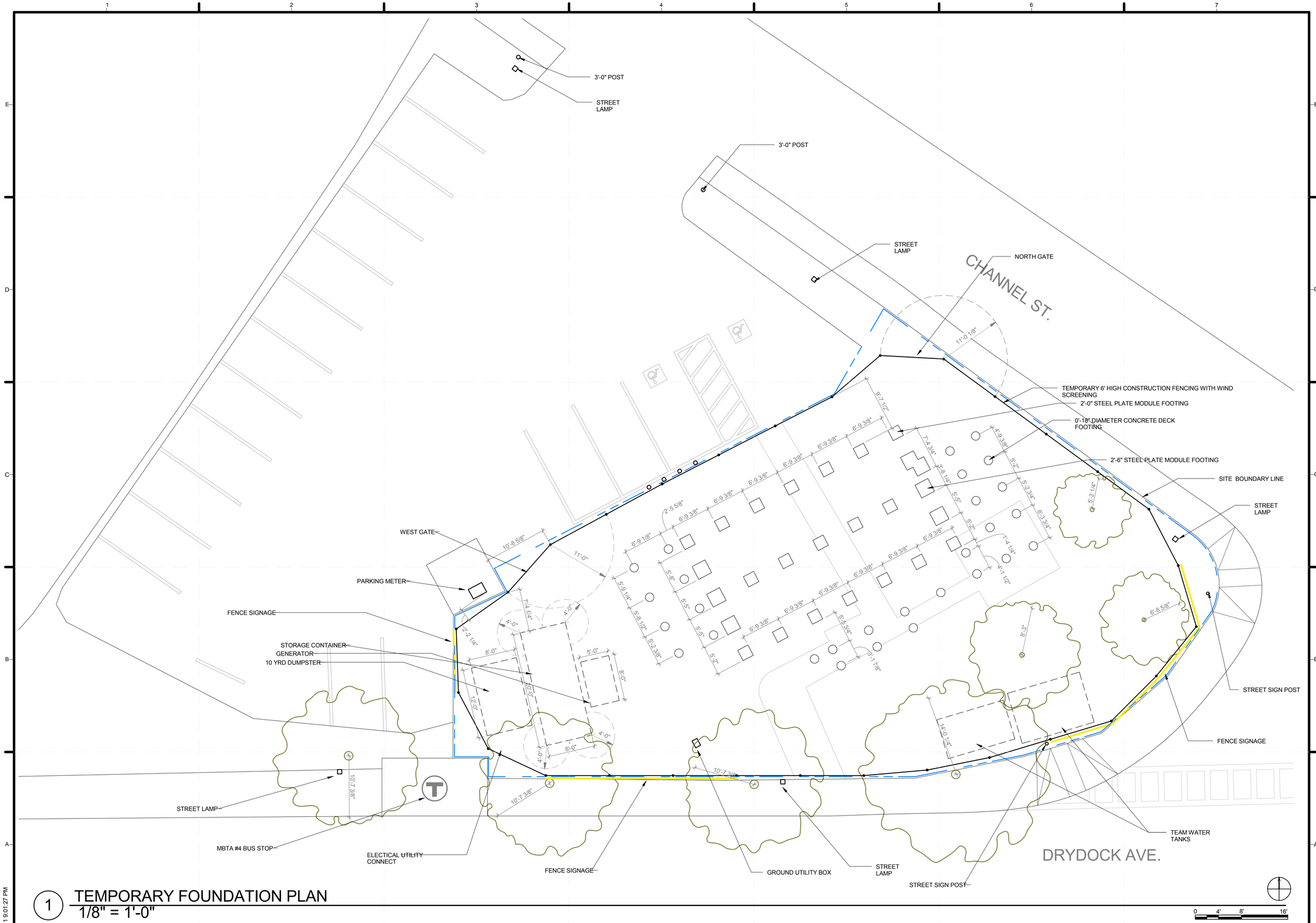

1 TEMPORARY FOUNDATION PLAN
1/8" = 1'-0"

8/12/2011 9:01:27 PM

TEAM NAME:	TEAM MASSACHUSETTS
ADDRESS:	MASSART 621 HUNTINGTON AVE. BOSTON MA 02115
CONTACT:	SPENCER CULHANE 602.677.6388 SPENCER.CULHANE@4DHOME.US

CONSULTANTS

EPOCH HOMES

PASSIVE HOUSE INSTITUTE US

SLADEN FEINSTEIN INTEGRATED LIGHTING

LEMESSURIER CONSULTANTS, STRUCTURAL ENGINEERS

CLIENT

U.S. DEPARTMENT OF ENERGY

SOLAR DECATHLON 2011

WWW.SOLARDECATHLON.GOV

U.S. DEPARTMENT OF ENERGY SOLAR DECATHLON

MARK	DATE	DESCRIPTION

LOT NUMBER:	NA
DRAWN BY:	SC
CHECKED BY:	PD
COPYRIGHT:	NONE: PROJECT IS PUBLIC DOMAIN

SHEET TITLE

DRY DOCK AVE. FOUNDATION SITE PLAN

O-106

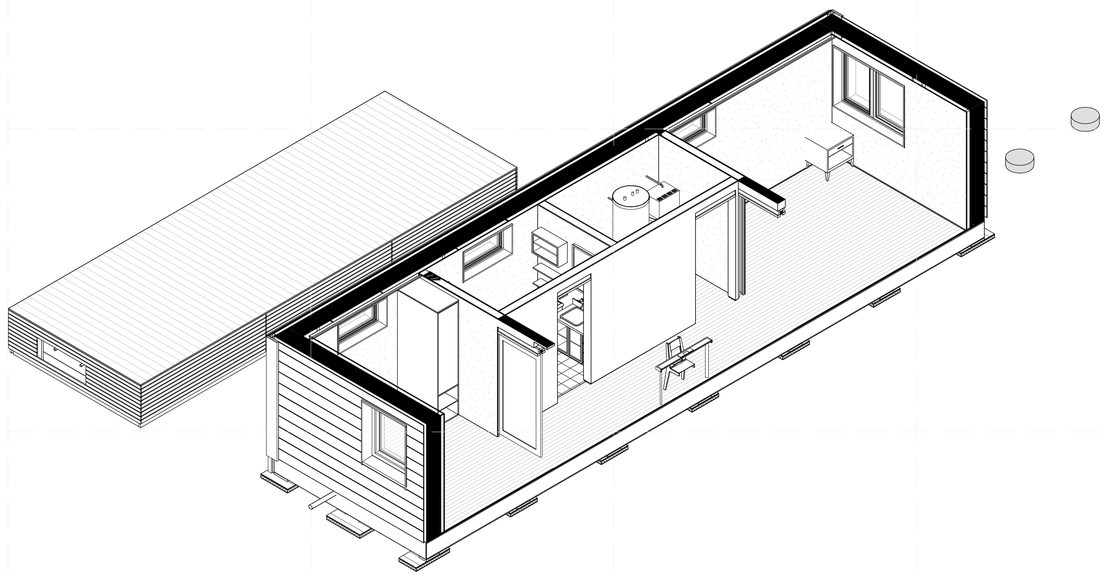

1 3D module assembly diagrams

8/12/2011 9:01:34 PM

TEAM NAME:	TEAM MASSACHUSETTS
ADDRESS:	MASSART 621 HUNTINGTON AVE. BOSTON MA 02115
CONTACT:	SPENCER CULHANE 602.677.6388 SPENCER.CULHANE@4DHOME.US WWW.4DHOME.US

CONSULTANTS

EPOCH HOMES

PASSIVE HOUSE INSTITUTE US

SLADEN FEINSTEIN INTEGRATED LIGHTING

LEMESSURIER CONSULTANTS, STRUCTURAL ENGINEERS

CLIENT

U.S. DEPARTMENT OF ENERGY

SOLAR DECATHLON 2011

WWW.SOLARDECATHLON.GOV

MARK	DATE	DESCRIPTION

LOT NUMBER:	NA
DRAWN BY:	Author
CHECKED BY:	Checker
COPYRIGHT:	NONE: PROJECT IS PUBLIC DOMAIN

SHEET TITLE

Unnamed

O-999