LIVING LIGHT

**OWNER**

THE UNIVERSITY OF TENNESSEE, KNOXVILLE
1715 VOLUNTEER BOULEVARD, RM 224
KNOXVILLE, TN 37996
865.974.5211

**TEAM CONTACT INFORMATION**

THE UNIVERSITY OF TENNESSEE, KNOXVILLE
1715 VOLUNTEER BOULEVARD, RM 313
KNOXVILLE, TN 37996

**PROJECT MANAGER**

AMY HOWARD

**ARCHITECTURE PROJECT MANAGER**

MEGAN CHAFIN

**PROJECT ENGINEER**

STEVEN COLEY

**FACULTY ADVISORS**

EDGAR STACH
JAMES ROSE
DR. LEON TOLBERT
DEBORAH SHMERLER
DR. RICHARD KELSO
DR. STAN JOHNSON
DAVE MATTHEWS
KEN MCKOWN
MERITA SOINI

**CONSULTANTS**

**ARCHITECT**

JAMES ROSE ARCHITECT
THE UNIVERSITY OF TENNESSEE, KNOXVILLE
1715 VOLUNTEER BOULEVARD, RM 304
KNOXVILLE, TN 37996
865.974.3290

**STRUCTURAL ENGINEERS**

ROSS BRYAN ASSOCIATES, INC.
227 FRENCH LANDING DRIVE, SUITE 500
NASHVILLE, TN 37228
615.329.1300

MALLIA ENGINEERING COMPANY
1827 WHITE AVENUE
KNOXVILLE, TN 37916
865.637.3224

**MECHANICAL ENGINEER**

RICHARD KELSO
THE UNIVERSITY OF TENNESSEE, KNOXVILLE
1715 VOLUNTEER BOULEVARD, RM 314
KNOXVILLE, TN 37996
865.974.3267

**ELECTRICAL ENGINEER**

LEON TOLBERT
THE UNIVERSITY OF TENNESSEE, KNOXVILLE
319 FERRIS HALL
KNOXVILLE, TN 37996
865.974.2881

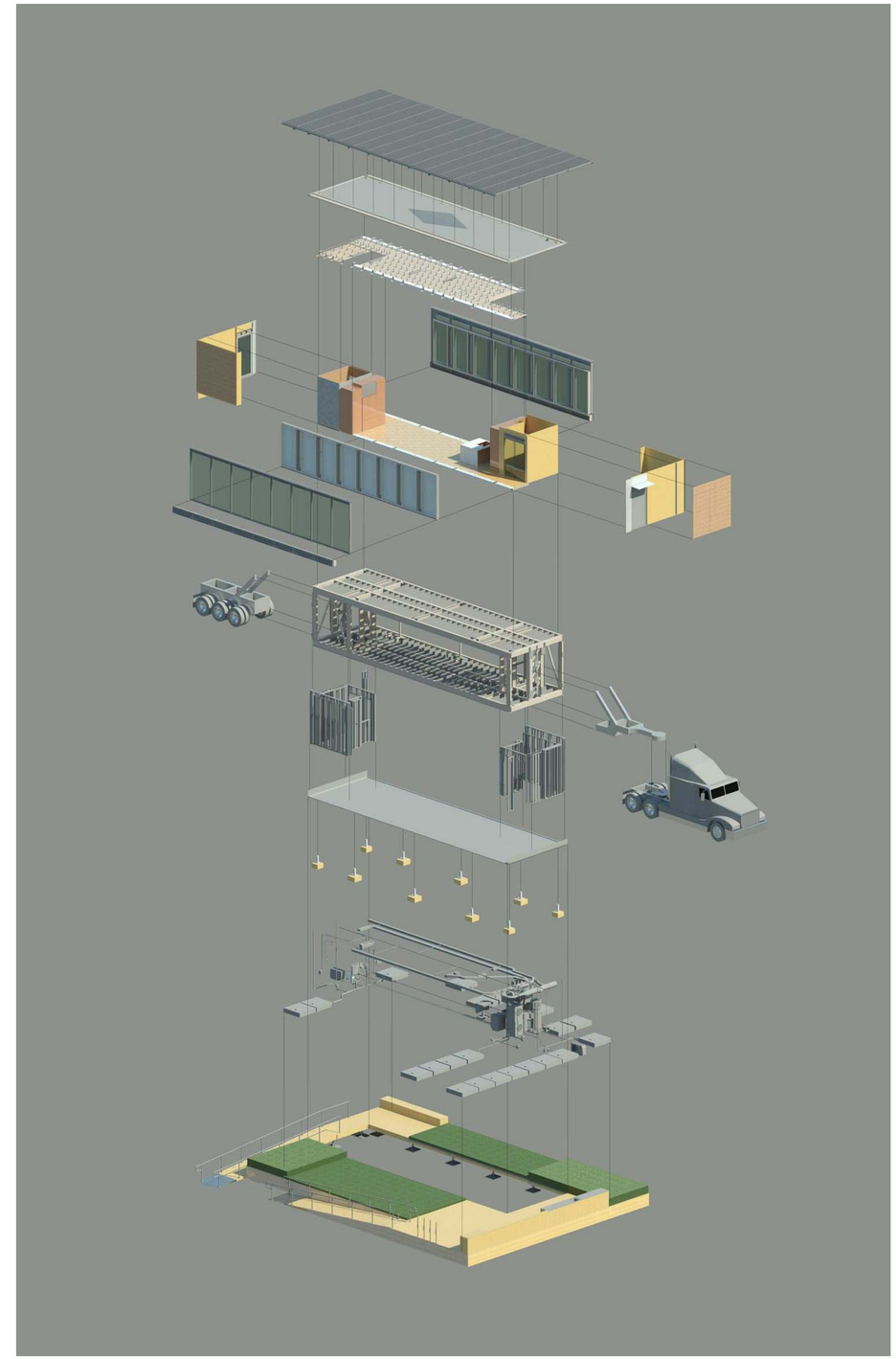

LIVING LIGHT

| | |
|---|---|
| TEAM NAME: | TENNESSEE |
| ADDRESS: | UNIVERSITY OF TENNESSEE<br>1715 VOLUNTEER BLVD., RM 313<br>KNOXVILLE, TN 37996 |
| CONTACT: | LIVLIGHT@UTK.EDU<br>HTTP://LIVINGLIGHTUTK.COM |

CONSULTANTS

JAMES ROSE ARCHITECT
MALLIA ENGINEERING
ROSS BRYAN ASSOCIATES
RICHARD KELSO
LEON TOLBERT

CLIENT

U.S. DEPARTMENT OF ENERGY
SOLAR DECATHLON 2011
WWW.SOLARDECATHLON.GOV

U.S. DEPARTMENT OF ENERGY SOLAR DECATHLON

| MARK | DATE | DESCRIPTION |
|---|---|---|

| | |
|---|---|
| LOT NUMBER: | 202 |
| DRAWN BY: | Author |
| CHECKED BY: | Checker |
| COPYRIGHT: | NONE: PROJECT IS PUBLIC DOMAIN |

SHEET TITLE

COVER SHEET

G-000

8/13/2011 10:46:29 AM

| SYMBOL LEGEND | |
|---|---|
| ROOM NAME 150 SF | AREA TAG |
| 1 A101 SIM | CALLOUT TAG |
| ℄ | CENTER LINE |
| 1T | DETAIL ITEM |
| 0 | STRUCTURAL GRID TAG |
| XX XX XX.XX | REFERENCE KEY NOTE TAG |
| ? | SHEET KEY NOTE TAG |
| | NORTH ARROW |
| 01 | REVISION TAG |
| ROOM NAME 101 | ROOM TAG |
| 0 2' 4' 8' | GRAPHIC SCALE |
| 1 A101 | EXTERIOR ELEVATION TAG |
| 1 Ref 1 Ref 1 Ref 1 Ref A101 | INTERIOR ELEVATION TAG |
| SIM A A101 | SECTION TAG |
| DESCRIPTION HEIGHT | ELEVATION TAG |
| C4 DRAWING BLOCK TITLE 1 1/2" = 1'-0" | DRAWING TITLE |
| BEAM TYPE (NO FAMILY NAME) @ SPACING | STRUCTURAL BEAM TAG |
| 1S | STRUCTURAL COLUMN TAG |
| 1G | STRUCTURAL FOUNDATION TAG |
| 1J | STRUCTURAL FRAMING TAG |

SHEET LIST

| SHT NO | SHEET NAME |
|---|---|
| G-000 | COVER SHEET |
| G-001 | GENERAL NOTES, SHEET LIST AND SYMBOLS |
| G-101 | FINISHED SQUARE FOOTAGE COMPLIANCE PLAN |
| G-102 | EGRESS PLAN |
| G-103 | ADA TOUR ROUTE PLAN AND PAVER PLAN |
| G-104 | INTERCONNECTION PLAN |
| G-201 | SOLAR ENVELOPE COMPLIANCE ELEVATIONS |
| G-501 | GRADE CHANGE SHIMMING METHOD |
| G-901 | SHADING DIAGRAMS |
| C-101 | SITE LOCATION |
| C-102 | GROUND CONTACT PLAN |
| C-103 | SITE GRID |
| C-104 | SITE PLAN |
| L-101 | LANDSCAPE PLAN |
| L-102 | DECK TEMPORARY FOUNDATION PLAN |
| L-103 | DECK FRAMING PLAN |
| L-104 | DECK AND SKIRT BOARD MODULE PLAN |
| L-105 | PLANTER PLAN AND SCHEDULE |
| L-201 | DECK ELEVATIONS |
| L-301 | DECK SECTIONS |
| L-501 | DECK MODULE DETAILS |
| L-502 | RAMP AND PLANTER MODULE DETAILS |
| L-503 | FOUNDATION SUPPORT DETAILS |
| L-504 | DECK FRAMING DETAILS |
| L-505 | DECK CASEWORK AND SKIRT BOARD DETAILS |
| L-506 | RAMP AND DECK LIGHTING DETAILS |
| L-507 | SHADE STRUCTURE DETAILS |
| L-601 | DECK SCHEDULES |
| S-101 | FOUNDATION PLAN |
| S-102 | FIRST FLOOR FRAMING PLAN |
| S-103 | ROOF FRAMING PLAN |
| S-201 | STRUCTURAL ELEVATIONS |
| S-301 | STRUCTURAL SECTIONS |
| S-302 | STRUCTURAL TRANSVERSE SECTIONS |
| S-303 | STRUCTURAL TRANSVERSE SECTIONS |
| S-501 | STRUCTURE CONNECTIONS |
| S-601 | STRUCTURAL STEEL SCHEDULE |
| A-101 | FIRST FLOOR PLAN |
| A-102 | ROOF PLAN |
| A-103 | ROOF RACK PLAN |
| A-111 | FIRST FLOOR REFLECTED CEILING PLAN |
| A-201 | NORTH AND SOUTH ELEVATIONS |
| A-202 | EAST AND WEST ELEVATIONS |
| A-301 | BUILDING SECTIONS |
| A-311 | WALL SECTIONS |
| A-312 | WALL SECTIONS |
| A-401 | ENLARGED WEST CORE PLAN AND ELEVATIONS |
| A-402 | ENLARGED EAST CORE PLAN AND ELEVATIONS |
| A-403 | BATHROOM ELEVATIONS |
| A-404 | CORE SECTIONS |
| A-405 | ENLARGED CORE EXTERIOR ELEVATIONS |
| A-501 | PLAN DETAILS |

SHEET LIST

| SHT NO | SHEET NAME |
|---|---|
| A-502 | WALL DETAILS |
| A-503 | WALL DETAILS |
| A-504 | WALL DETAILS |
| A-505 | FLASHING DETAILS |
| A-506 | PHOTOVOLTAIC RACK FOOTING DETAILS |
| A-507 | PHOTOVOLTAIC ROOF RACK DETAILS |
| A-601 | DOOR & WINDOW SCHEDULES AND ELEVATIONS |
| I-101 | INTERIORS PLAN |
| I-501 | KITCHEN ISLAND DETAILS |
| I-601 | INTERIOR SCHEDULES |
| F-101 | FIRE PROTECTION PLAN |
| P-101 | PLUMBING SITE PLAN |
| P-102 | DOMESTIC SUPPLY |
| P-103 | DOMESTIC WASTE |
| P-201 | RISER ELEVATIONS |
| P-501 | PLUMBING DETAILS |
| P-601 | PLUMBING SCHEDULES |
| P-901 | SUPPLY ISOMETRIC |
| P-902 | WASTE ISOMETRIC |
| P-903 | RAINWATER COLLECTION ISOMETRIC |
| M-101 | HVAC EQUIPMENT AND DISTRIBUTION PLAN |
| M-102 | VENTILATION SYSTEM PLANS |
| M-201 | MECHANICAL CLOSET ELEVATIONS |
| M-501 | MECHANICAL DETAILS |
| M-601 | MECHANICAL EQUIPMENT SCHEDULE |
| M-901 | HVAC ISOMETRICS |
| E-101 | ELECTRICAL DISTRIBUTION PLAN |
| E-102 | LIGHTING PLAN |
| E-201 | ELECTRICAL CLOSET ELEVATIONS |
| E-601 | ONE-LINE DIAGRAM |
| E-602 | THREE-LINE DIAGRAM |
| E-603 | PANEL AND ELECTRICAL SCHEDULES |
| T-101 | BUILDING CONTROLS PLAN |
| T-501 | BUILDING CONTROLS DETAILS |
| T-601 | CONTROLS WIRING DIAGRAM |
| X-101 | PUBLIC EXHIBIT PLAN |
| X-201 | PUBLIC EXHIBIT ELEVATIONS |
| X-501 | PUBLIC EXHIBIT DETAILS |
| O-101 | ARRIVAL SEQUENCE PHASE 1 |
| O-102 | ARRIVAL SEQUENCE PHASE 2 |
| O-103 | DISASSEMBLY SEQUENCE PHASE 1 |
| O-104 | DISASSEMBLY SEQUENCE PHASE 2 |
| O-105 | WATER DELIVERY AND REMOVAL |

LIVING LIGHT


TEAM NAME: TENNESSEE

ADDRESS: UNIVERSITY OF TENNESSEE
1715 VOLUNTEER BLVD., RM 313
KNOXVILLE, TN 37996

CONTACT: LIVLIGHT@UTK.EDU
HTTP://LIVINGLIGHTUTK.COM


CONSULTANTS

JAMES ROSE ARCHITECT

MALLIA ENGINEERING

ROSS BRYAN ASSOCIATES

RICHARD KELSO

LEON TOLBERT

CLIENT

U.S. DEPARTMENT OF ENERGY

SOLAR DECATHLON 2011

WWW.SOLARDECATHLON.GOV

U.S. DEPARTMENT OF ENERGY SOLAR DECATHLON

| MARK | DATE | DESCRIPTION |
|---|---|---|

| | |
|---|---|
| LOT NUMBER: | 202 |
| DRAWN BY: | MEGAN CHAFIN |
| CHECKED BY: | JAMES ROSE |
| COPYRIGHT: | NONE: PROJECT IS PUBLIC DOMAIN |

SHEET TITLE

GENERAL NOTES, SHEET LIST AND SYMBOLS

G-001

8/13/2011 10:46:31 AM

PLANTING

DECK

FINISHED FLOOR AREA

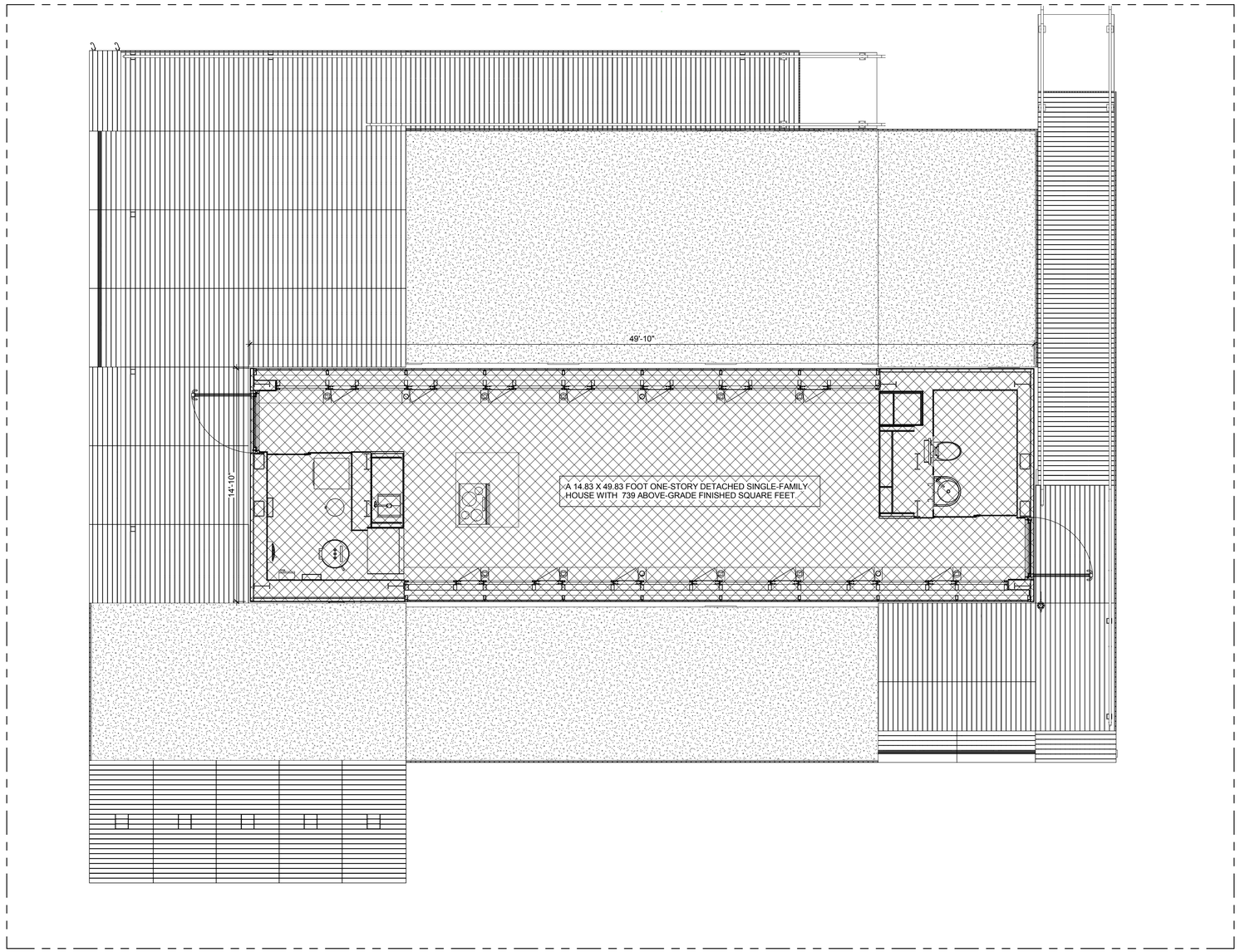


A1 FINISHED SQUARE FOOTAGE COMPLIANCE PLAN

1/4" = 1'-0"

0 2' 4' 8'

## GENERAL SHEET NOTES

1. FINISHED SQUARE FOOTAGE CALCULATED PER ANSI Z765-2003.
2. FINISHED SQUARE FOOTAGE CALCULATIONS FOR THIS HOUSE WERE MADE BASED ON PLAN DIMENSIONS ONLY AND MAY VARY FROM THE FINISHED SQUARE FOOTAGE OF THE HOUSE AS BUILT.

## REFERENCE KEYNOTES

## SHEET KEYNOTES

LIVING LIGHT


TEAM NAME: TENNESSEE

ADDRESS: UNIVERSITY OF TENNESSEE
1715 VOLUNTEER BLVD., RM 313
KNOXVILLE, TN 37996

CONTACT: LIVLIGHT@UTK.EDU
HTTP://LIVINGLIGHTUTK.COM


CONSULTANTS

JAMES ROSE ARCHITECT

MALLIA ENGINEERING

ROSS BRYAN ASSOCIATES

RICHARD KELSO

LEON TOLBERT

CLIENT

U.S. DEPARTMENT OF ENERGY

SOLAR DECATHLON 2011

WWW.SOLARDECATHLON.GOV

U.S. DEPARTMENT OF ENERGY SOLAR DECATHLON

| MARK | DATE | DESCRIPTION |
|---|---|---|

| | |
|---|---|
| LOT NUMBER: | 202 |
| DRAWN BY: | MEGAN CHAFIN |
| CHECKED BY: | JAMES ROSE |
| COPYRIGHT: | NONE: PROJECT IS PUBLIC DOMAIN |

SHEET TITLE

FINISHED SQUARE FOOTAGE COMPLIANCE PLAN

G-101

8/13/2011 10:46:43 AM

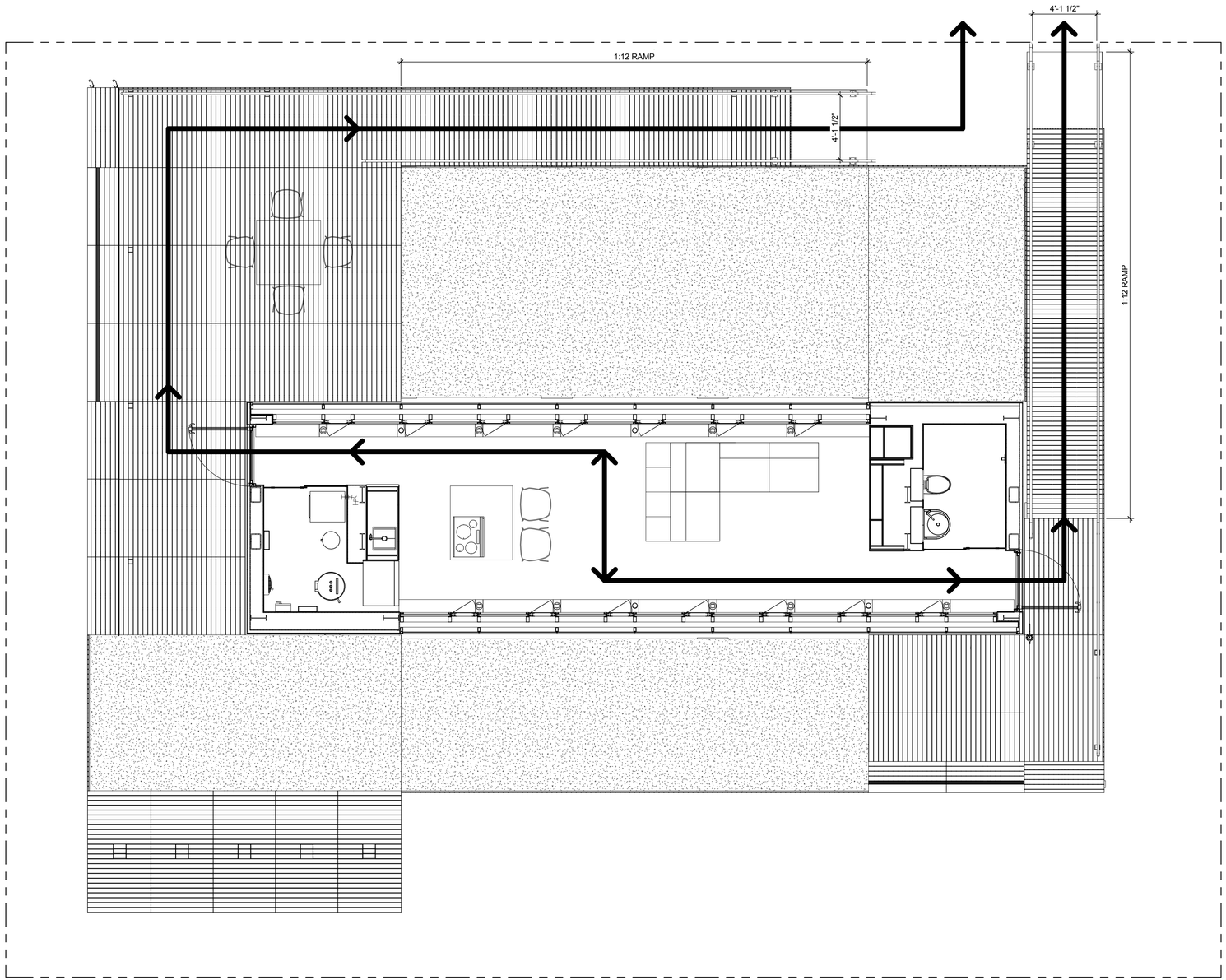


A1 EGRESS PLAN
1/4" = 1'-0"

0 2' 4' 8'

8/13/2011 10:46:54 AM

LIVING LIGHT

| | |
|---|---|
| TEAM NAME: | TENNESSEE |
| ADDRESS: | UNIVERSITY OF TENNESSEE<br>1715 VOLUNTEER BLVD., RM 313<br>KNOXVILLE, TN 37996 |
| CONTACT: | LIVLIGHT@UTK.EDU<br>HTTP://LIVINGLIGHTUTK.COM |

CONSULTANTS

JAMES ROSE ARCHITECT
MALLIA ENGINEERING
ROSS BRYAN ASSOCIATES
RICHARD KELSO
LEON TOLBERT

CLIENT

U.S. DEPARTMENT OF ENERGY
SOLAR DECATHLON 2011
WWW.SOLARDECATHLON.GOV

U.S. DEPARTMENT OF ENERGY SOLAR DECATHLON

| MARK | DATE | DESCRIPTION |
|---|---|---|

| | |
|---|---|
| LOT NUMBER: | 202 |
| DRAWN BY: | MEGAN CHAFIN |
| CHECKED BY: | JAMES ROSE |
| COPYRIGHT: | NONE: PROJECT IS PUBLIC DOMAIN |

SHEET TITLE

EGRESS PLAN

G-102

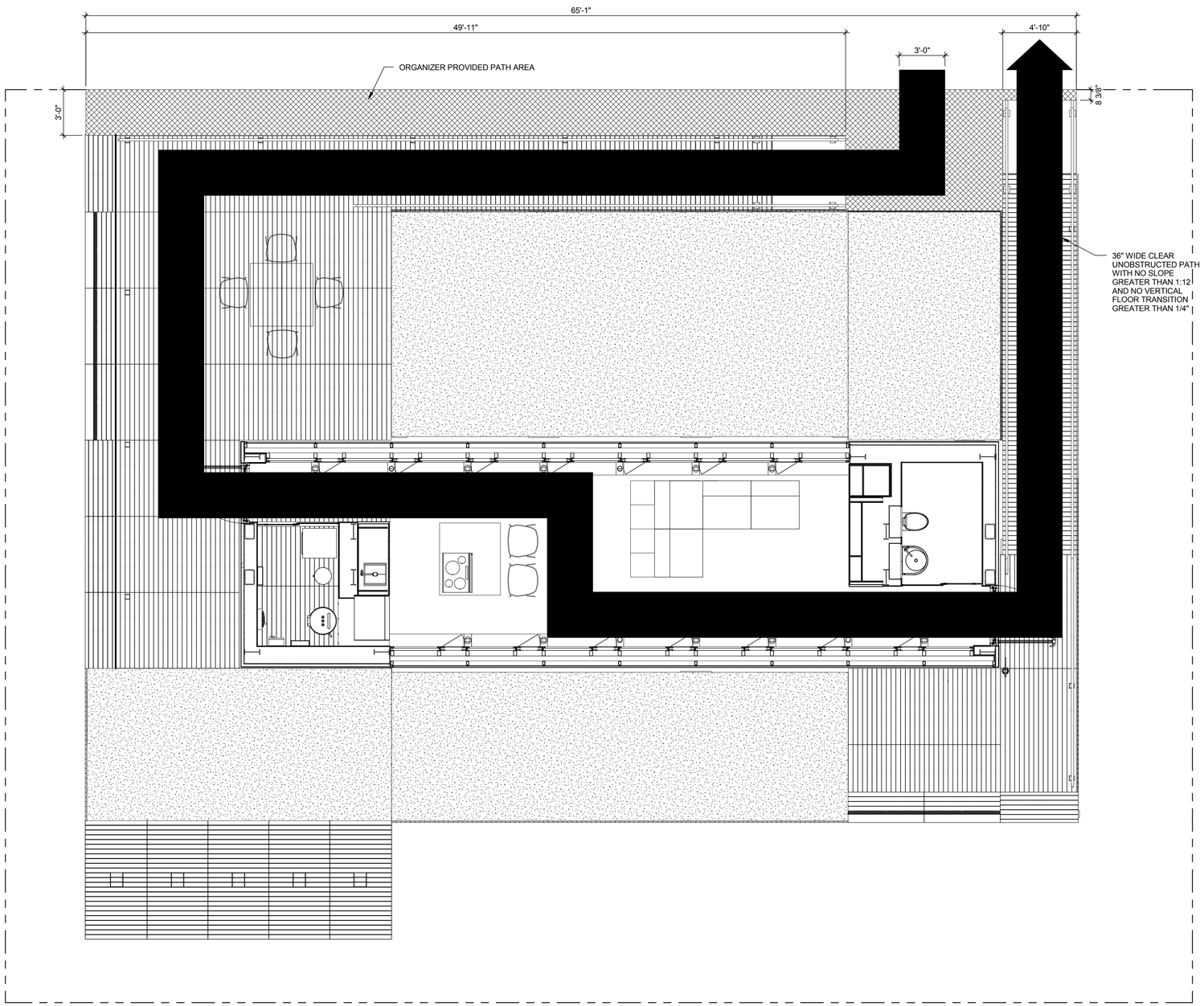


A1 ADA TOUR ROUTE PLAN AND PAVER PLAN
1/4" = 1'-0"

0 2' 4' 8'

8/13/2011 10:47:08 AM

LIVING LIGHT

| | |
|---|---|
| TEAM NAME: | TENNESSEE |
| ADDRESS: | UNIVERSITY OF TENNESSEE<br>1715 VOLUNTEER BLVD., RM 313<br>KNOXVILLE, TN 37996 |
| CONTACT: | LIVLIGHT@UTK.EDU<br>HTTP://LIVINGLIGHTUTK.COM |

CONSULTANTS

JAMES ROSE ARCHITECT
MALLIA ENGINEERING
ROSS BRYAN ASSOCIATES
RICHARD KELSO
LEON TOLBERT

CLIENT

U.S. DEPARTMENT OF ENERGY
SOLAR DECATHLON 2011
WWW.SOLARDECATHLON.GOV

U.S. DEPARTMENT OF ENERGY SOLAR DECATHLON

| MARK | DATE | DESCRIPTION |
|---|---|---|

| | |
|---|---|
| LOT NUMBER: | 202 |
| DRAWN BY: | MEGAN CHAFIN |
| CHECKED BY: | JAMES ROSE |
| COPYRIGHT: | NONE: PROJECT IS PUBLIC DOMAIN |

SHEET TITLE

ADA TOUR ROUTE PLAN AND PAVER PLAN

G-103

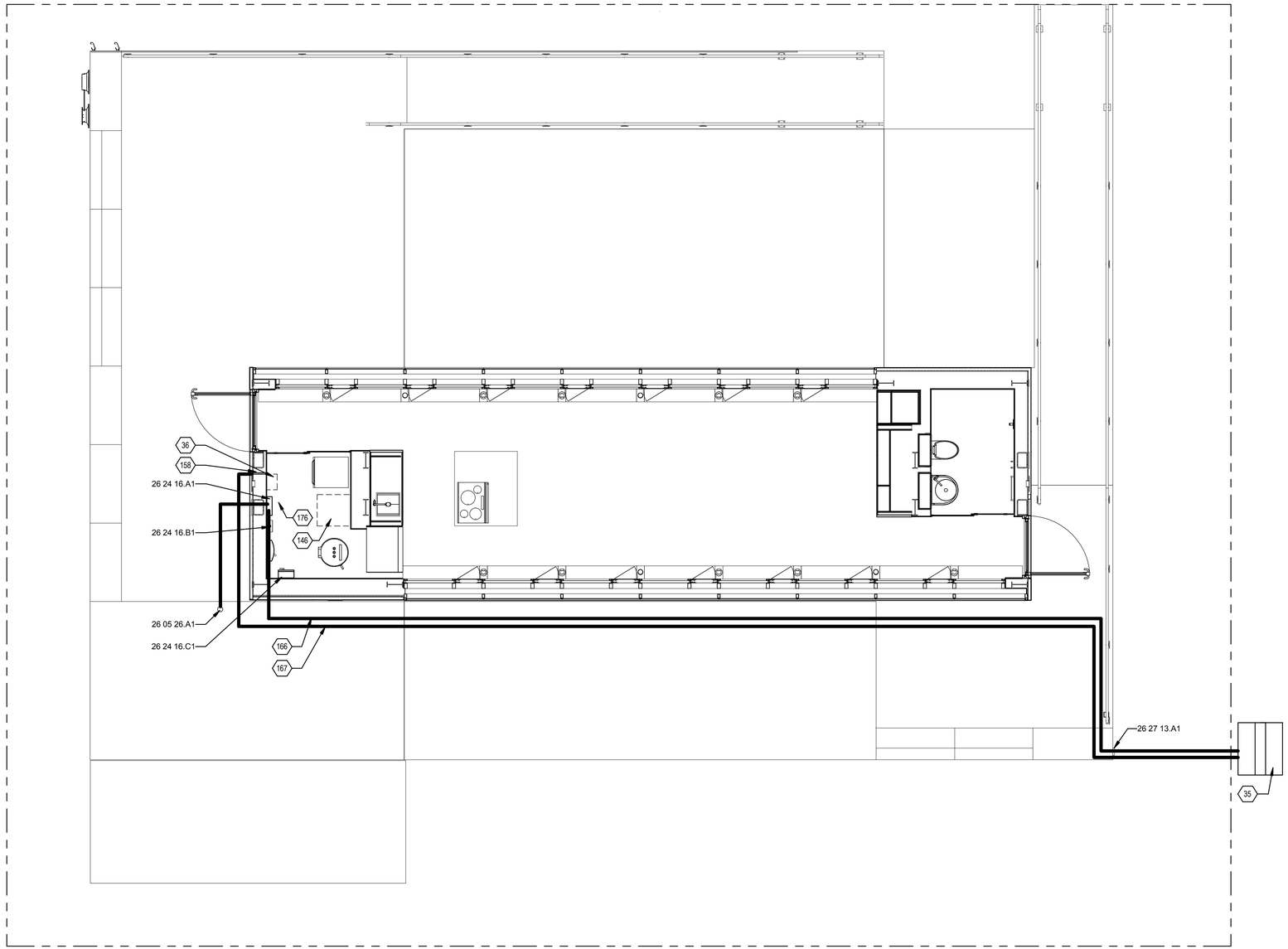


A1 VILLAGE GRID CONNECTION
1/4" = 1'-0"

0 2' 4' 8'

## GENERAL SHEET NOTES

## REFERENCE KEYNOTES

| | |
|---|---|
| 26 05 26.A1 | 8' LONG 5/8" DIAMETER ZINC-COATED STEEL GROUNDING ROD |
| 26 24 16.A1 | DISTRIBUTION PANEL |
| 26 24 16.B1 | SOLAR LOAD CENTER |
| 26 24 16.C1 | DC DISCONNECT COMBINER |
| 26 27 13.A1 | ELECTRICAL METER HOUSING |

## SHEET KEYNOTES

| | |
|---|---|
| 35 | ORGANIZER UTILITY PANEL |
| 36 | 12" X 24" CLEAR SPACE FOR ORANIZERS ENCLOSURE FOR NET PV PRODUCTION METER |
| 146 | COMPETITION ORGANIZER DATALOGGER AND ENCLOSURE |
| 158 | 1" CONDUIT THROUGH EXTERIOR WALL TO ALLOW FOR ORGANIZER'S CABLE. ACCESSIBLE PRIOR TO EXTERIOR FACADE PANEL INSTALLATION. REFERENCE A5/T-501. |
| 166 | TEAM POWER CABLE FROM TEAM PANEL BOARD VIA TEAM METER HOUSING TO THE ORGANIZER UTILITY PANEL. CABLE TO BE CONNECTED TO DISTRIBUTION PANEL ON SITE. REFERENCE SHEET E-602. |
| 167 | ORGANIZER CABLE TO ORGANIZER'S ENCLOSURE AND DATALOGGER ENCLOSURE. TO BE RUN PRIOR TO DECK INSTALLATION |
| 176 | DETACH PORTION OF METAL BELLY PAN TO RUN CABLE TO DISTRIBUTION PANEL |

LIVING LIGHT


TEAM NAME: TENNESSEE

ADDRESS: UNIVERSITY OF TENNESSEE
1715 VOLUNTEER BLVD., RM 313
KNOXVILLE, TN 37996

CONTACT: LIVLIGHT@UTK.EDU
HTTP://LIVINGLIGHTUTK.COM


CONSULTANTS

JAMES ROSE ARCHITECT
MALLIA ENGINEERING
ROSS BRYAN ASSOCIATES
RICHARD KELSO
LEON TOLBERT

CLIENT

U.S. DEPARTMENT OF ENERGY
SOLAR DECATHLON 2011
WWW.SOLARDECATHLON.GOV

U.S. DEPARTMENT OF ENERGY SOLAR DECATHLON

| MARK | DATE | DESCRIPTION |
|---|---|---|

| | |
|---|---|
| LOT NUMBER: | 202 |
| DRAWN BY: | MEGAN CHAFIN |
| CHECKED BY: | JAMES ROSE |
| COPYRIGHT: | NONE: PROJECT IS PUBLIC DOMAIN |

SHEET TITLE

INTERCONNECTION PLAN

G-104

8/13/2011 10:47:14 AM

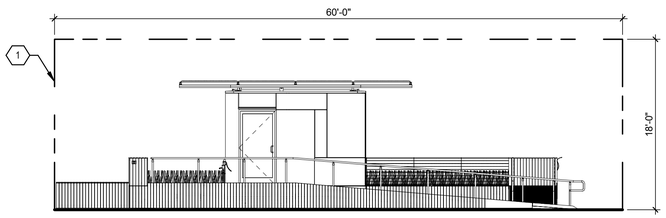


C1 EAST ELEVATION
1/8" = 1'-0"
0 4' 8' 16'

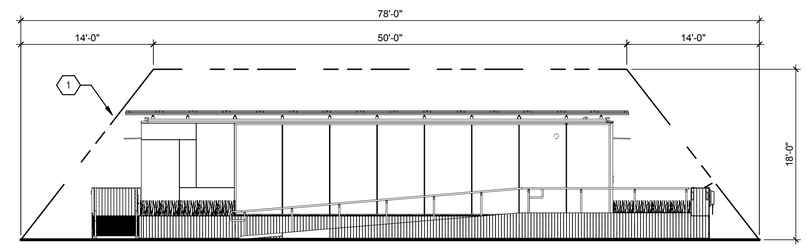


C4 NORTH ELEVATION
1/8" = 1'-0"
0 4' 8' 16'

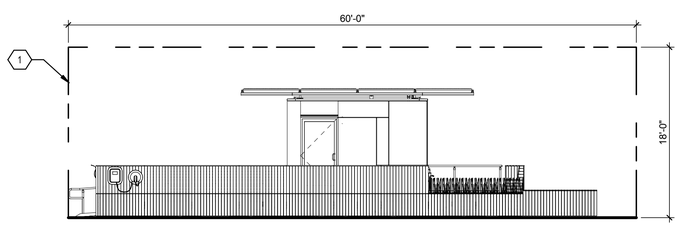


A1 WEST ELEVATION
1/8" = 1'-0"
0 4' 8' 16'

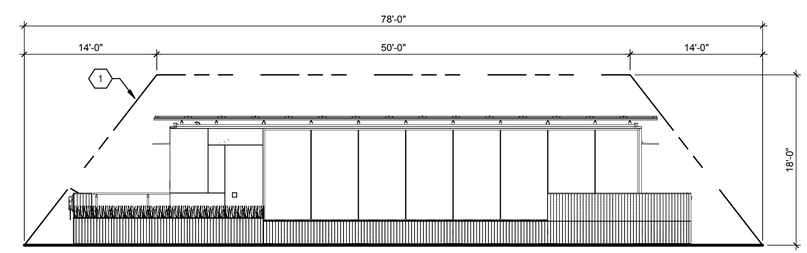


A4 SOUTH ELEVATION
1/8" = 1'-0"
0 4' 8' 16'

## GENERAL SHEET NOTES

1. THE HOUSE AND ALL ASSOCIATED COMPONENTS HAVE BEEN DESIGNED TO FIT WITHIN THE REQUIRED SOLAR ENVELOPE. IF ELEMENTS ARE EXPECTED TO EXCEED SHOWN DIMENSIONS OF SOLAR ENVELOPE, CONTRACTOR TO CONTACT ARCHITECT PRIOR TO PROCEEDING WITH WORK.

## REFERENCE KEYNOTES

## SHEET KEYNOTES

1 SOLAR ENVELOPE

LIVING LIGHT


TEAM NAME: TENNESSEE
ADDRESS: UNIVERSITY OF TENNESSEE
1715 VOLUNTEER BLVD., RM 313
KNOXVILLE, TN 37996
CONTACT: LIVLIGHT@UTK.EDU
HTTP://LIVINGLIGHTUTK.COM


CONSULTANTS

JAMES ROSE ARCHITECT
MALLIA ENGINEERING
ROSS BRYAN ASSOCIATES
RICHARD KELSO
LEON TOLBERT

CLIENT

U.S. DEPARTMENT OF ENERGY
SOLAR DECATHLON 2011
WWW.SOLARDECATHLON.GOV

U.S. DEPARTMENT OF ENERGY SOLAR DECATHLON

| MARK | DATE | DESCRIPTION |
|---|---|---|

| | |
|---|---|
| LOT NUMBER: | 202 |
| DRAWN BY: | AMANDA GANN |
| CHECKED BY: | JAMES ROSE |
| COPYRIGHT: | NONE: PROJECT IS PUBLIC DOMAIN |

SHEET TITLE

SOLAR ENVELOPE COMPLIANCE ELEVATIONS

G-201

8/13/2011 10:47:46 AM

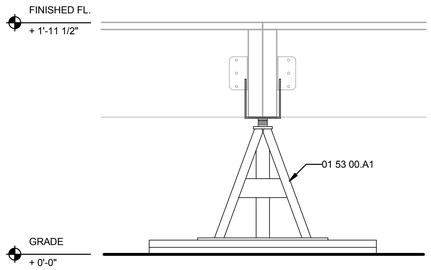


C1 DECK FOOTING LOWEST POSITION
1 1/2" = 1'-0"
0 1/2' 1' 1 1/2'

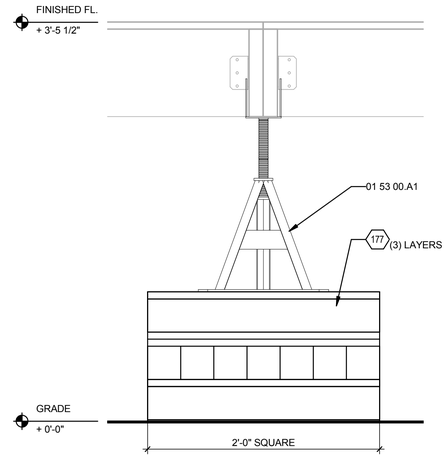


C4 DECK FOOTING HIGHEST POSITION
1 1/2" = 1'-0"
0 1/2' 1' 1 1/2'

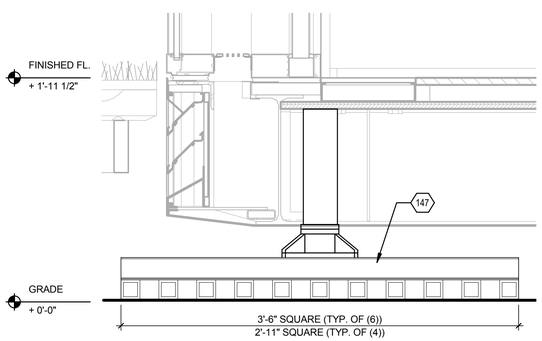


A1 BUILDING FOOTING LOWEST POSITION
1 1/2" = 1'-0"
0 1/2' 1' 1 1/2'

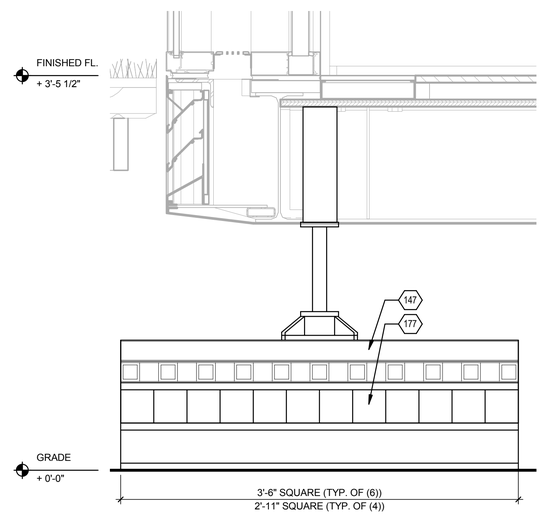


A4 BUILDING FOOTING HIGHEST POSITION
1 1/2" = 1'-0"
0 1/2' 1' 1 1/2'

## GENERAL SHEET NOTES

## REFERENCE KEYNOTES

| | |
|---|---|
| 01 53 00.A1 | ADJUSTABLE DECK SUPPORT |

## SHEET KEYNOTES

| | |
|---|---|
| 49 | STEEL CRIBBING CONSISTING OF TWO CROSS STACKED LAYERS. THE BOTTOM LAYER CONTAINS (11) HSS 2" X 2" X 1/4" X 3'-6" SANDWICHED BETWEEN (2) 1/8" X 3'-6" X 3'-6" STEEL PLATES. THE TOP LAYER CONTAINS (6) HSS 2" X 2" X 1/4" X 3'-6" SANDWICHED BETWEEN (2) 1/8" X 12" X 3'-6" STEEL PLATES. |
| 147 | STEEL CRIBBING, SIMILAR TO CRIBBING SHOWN ON SHEET S-101 |
| 177 | WOOD CRIBBING CONSISTING OF OF (2) LAYERS OF (10) 4 X 4'S SANDWICHED BETWEEN (2) LAYERS OF 3/4" PLYWOOD, CROSS STACKED. |

LIVING LIGHT


TEAM NAME: TENNESSEE
ADDRESS: UNIVERSITY OF TENNESSEE
1715 VOLUNTEER BLVD., RM 313
KNOXVILLE, TN 37996
CONTACT: LIVLIGHT@UTK.EDU
HTTP://LIVINGLIGHTUTK.COM


CONSULTANTS
JAMES ROSE ARCHITECT
MALLIA ENGINEERING
ROSS BRYAN ASSOCIATES
RICHARD KELSO
LEON TOLBERT

CLIENT
U.S. DEPARTMENT OF ENERGY
SOLAR DECATHLON 2011
WWW.SOLARDECATHLON.GOV

U.S. DEPARTMENT OF ENERGY SOLAR DECATHLON

| MARK | DATE | DESCRIPTION |
|---|---|---|

| | |
|---|---|
| LOT NUMBER: | 202 |
| DRAWN BY: | MEGAN CHAFIN |
| CHECKED BY: | JAMES ROSE |
| COPYRIGHT: | NONE: PROJECT IS PUBLIC DOMAIN |

SHEET TITLE
GRADE CHANGE SHIMMING METHOD

G-501

8/13/2011 10:47:50 AM

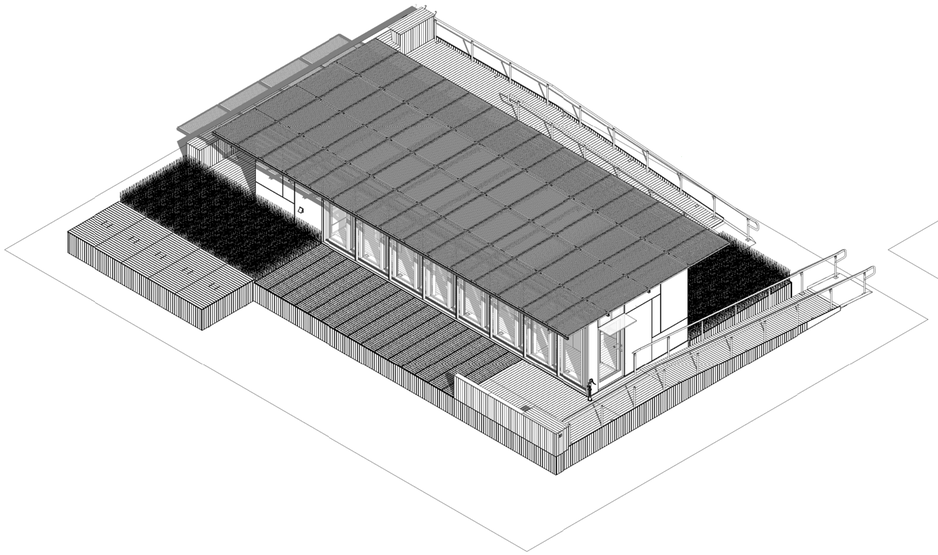

D1 SHADED PERSPECTIVE 9AM

0 4' 8' 16'

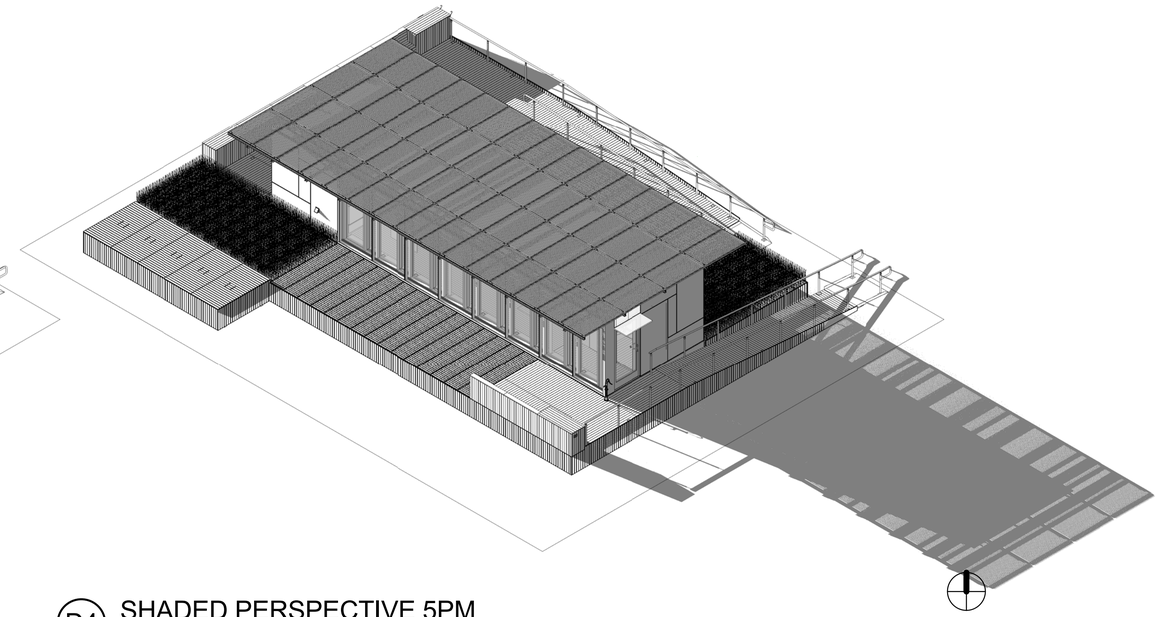

D4 SHADED PERSPECTIVE 5PM

0 4' 8' 16'

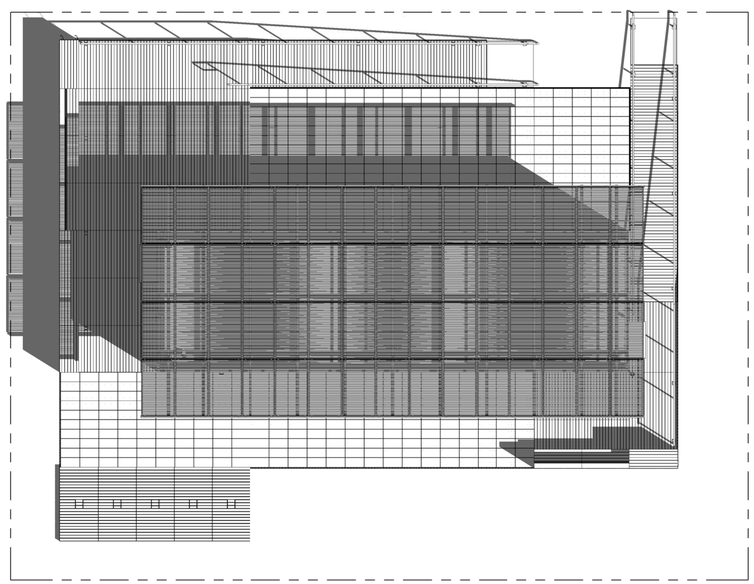

A1 SHADED PLAN VIEW 9AM

1/8" = 1'-0"

0 4' 8' 16'

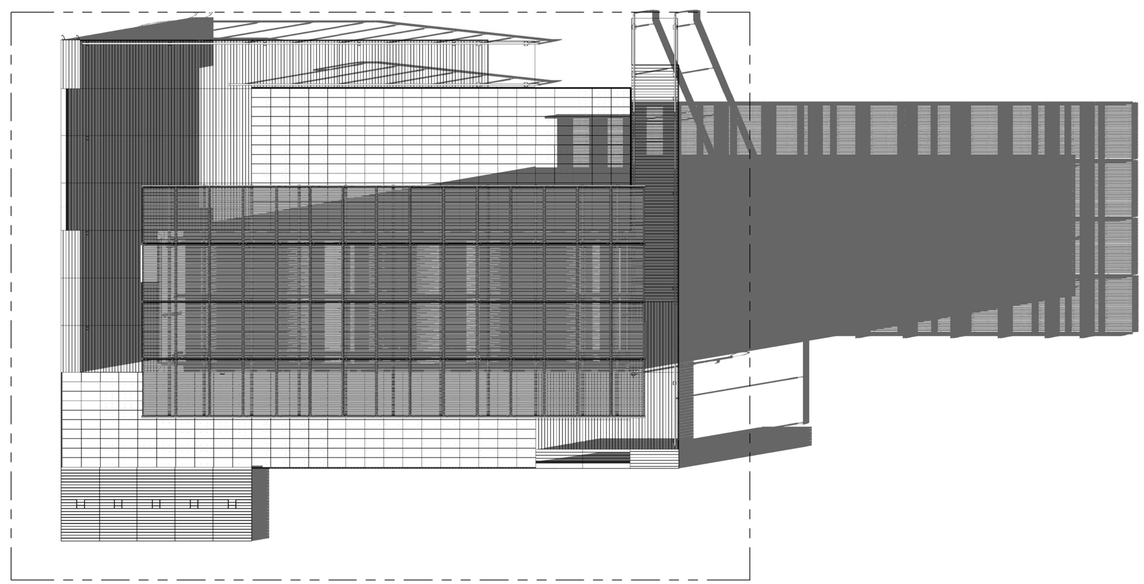

A4 SHADED PLAN VIEW 5PM

1/8" = 1'-0"

0 4' 8' 16'

8/13/2011 10:49:11 AM

LIVING LIGHT

| | |
|---|---|
| TEAM NAME: | TENNESSEE |
| ADDRESS: | UNIVERSITY OF TENNESSEE<br>1715 VOLUNTEER BLVD., RM 313<br>KNOXVILLE, TN 37996 |
| CONTACT: | LIVLIGHT@UTK.EDU<br>HTTP://LIVINGLIGHTUTK.COM |

CONSULTANTS

JAMES ROSE ARCHITECT

MALLIA ENGINEERING

ROSS BRYAN ASSOCIATES

RICHARD KELSO

LEON TOLBERT

CLIENT

U.S. DEPARTMENT OF ENERGY

SOLAR DECATHLON 2011

WWW.SOLARDECATHLON.GOV

U.S. DEPARTMENT OF ENERGY SOLAR DECATHLON

| MARK | DATE | DESCRIPTION |
|---|---|---|

| | |
|---|---|
| LOT NUMBER: | 202 |
| DRAWN BY: | MEGAN CHAFIN |
| CHECKED BY: | JAMES ROSE |
| COPYRIGHT: | NONE: PROJECT IS PUBLIC DOMAIN |

SHEET TITLE

SHADING DIAGRAMS

G-901

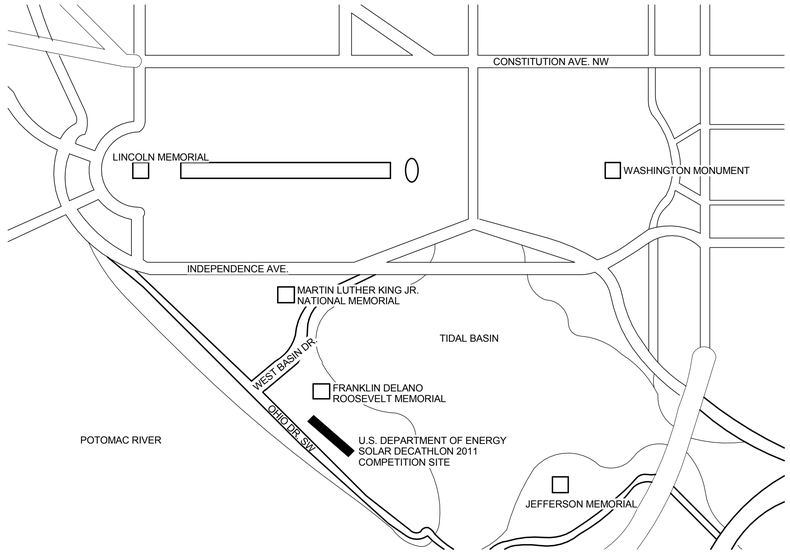


## C1 COMPETITION SITE LOCATION MAP

NOT TO SCALE

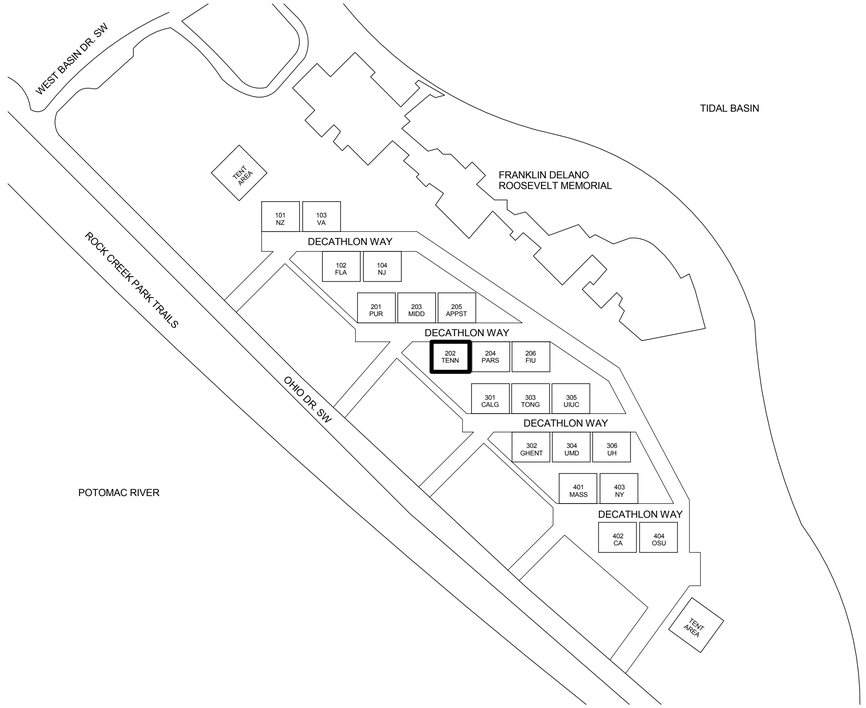


## A1 DECATHLETE VILLAGE MAP

NOT TO SCALE

8/13/2011 10:45:03 AM

LIVING LIGHT

| | |
|---|---|
| TEAM NAME: | TENNESSEE |
| ADDRESS: | UNIVERSITY OF TENNESSEE<br>1715 VOLUNTEER BLVD., RM 313<br>KNOXVILLE, TN 37996 |
| CONTACT: | LIVLIGHT@UTK.EDU<br>HTTP://LIVINGLIGHTUTK.COM |

CONSULTANTS

JAMES ROSE ARCHITECT
MALLIA ENGINEERING
ROSS BRYAN ASSOCIATES
RICHARD KELSO
LEON TOLBERT

CLIENT

U.S. DEPARTMENT OF ENERGY
SOLAR DECATHLON 2011
WWW.SOLARDECATHLON.GOV

U.S. DEPARTMENT OF ENERGY SOLAR DECATHLON

| MARK | DATE | DESCRIPTION |
|---|---|---|

| | |
|---|---|
| LOT NUMBER: | 202 |
| DRAWN BY: | MEGAN CHAFIN |
| CHECKED BY: | JAMES ROSE |
| COPYRIGHT: | NONE: PROJECT IS PUBLIC DOMAIN |

SHEET TITLE

SITE LOCATION

C-101

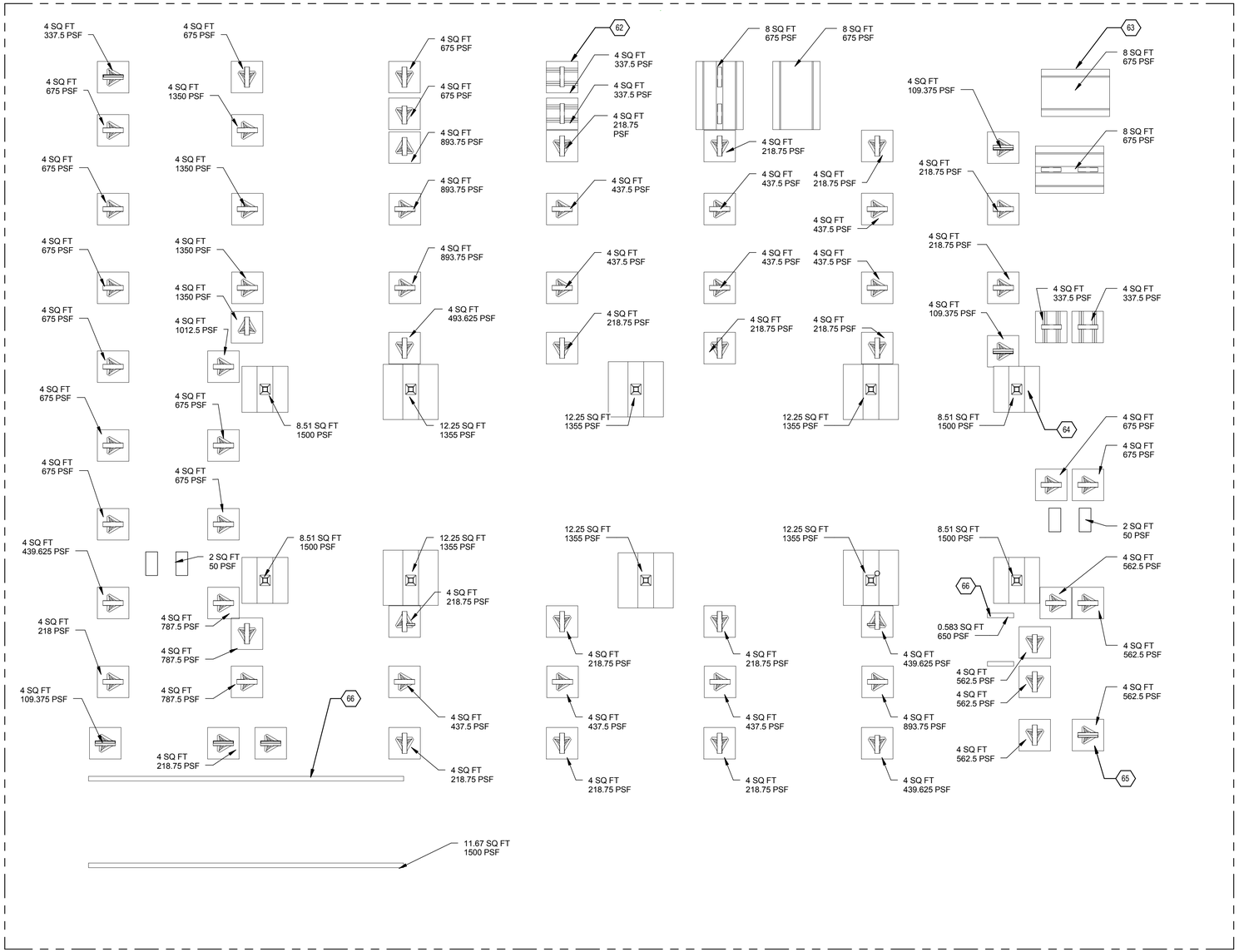


A1 GROUND CONTACT PLAN

1/4" = 1'-0"

0 2' 4' 8'

8/13/2011 10:45:07 AM

## GENERAL SHEET NOTES

1. IN ACCORDANCE WITH RULE 4-7, THE FOOTINGS AND FOUNDATIONS HAVE BEEN DESIGNED TO ACCOMMODATE UP TO 18" OF GRADE CHANGE. ALL FOOTINGS HAVE ADJUSTABLE SCREWS WHICH ACCOMMODATE THE ELEVATION CHANGE BY LOWERING THE CONNECTOR WITHOUT COMPROMISING THE STRUCTURAL DESIGN. ANY MINOR ADJUSTMENTS CAN BE ACCOMMODATED THROUGH THE USE OF WOODEN SHIMS AND A THIN SAND BED ON GEOTEXTILE FABRIC TO LEVEL THE GROUND SURFACE.
2. FOR HOUSE FOUNDATION UNDERLAYMENT INFORMATION, SEE DETAILS ON S-101 AND SPECIFICATION SECTION 01 53 00.

## REFERENCE KEYNOTES

## SHEET KEYNOTES

| | |
|---|---|
| 62 | TEMPORARY RAMP SUPPORT, TYP. FOR (4) |
| 63 | TEMPORARY RAMP MAT SUPPORT, TYP. FOR (4) |
| 64 | TEMPORARY BUILDING PIER, TYP. FOR (10) |
| 65 | TEMPORARY DECK PIER, TYP. FOR (64) |
| 66 | TEMPORARY WATER TANK SUPPORT, (2) 20' LONG 4 X 4 AT SUPPLY, WASTE AND FIRE TANKS AND (2) 12" LONG 4 X 4 AT RAIN CISTERN. |

LIVING LIGHT


| | |
|---|---|
| TEAM NAME: | TENNESSEE |
| ADDRESS: | UNIVERSITY OF TENNESSEE<br>1715 VOLUNTEER BLVD., RM 313<br>KNOXVILLE, TN 37996 |
| CONTACT: | LIVLIGHT@UTK.EDU<br>HTTP://LIVINGLIGHTUTK.COM |

CONSULTANTS

JAMES ROSE ARCHITECT

MALLIA ENGINEERING

ROSS BRYAN ASSOCIATES

RICHARD KELSO

LEON TOLBERT


CLIENT

U.S. DEPARTMENT OF ENERGY

SOLAR DECATHLON 2011

WWW.SOLARDECATHLON.GOV

U.S. DEPARTMENT OF ENERGY SOLAR DECATHLON

| MARK | DATE | DESCRIPTION |
|---|---|---|

| | |
|---|---|
| LOT NUMBER: | 202 |
| DRAWN BY: | JAMES DYER |
| CHECKED BY: | JAMES ROSE |
| COPYRIGHT: | NONE: PROJECT IS PUBLIC DOMAIN |

SHEET TITLE

GROUND CONTACT PLAN

C-102

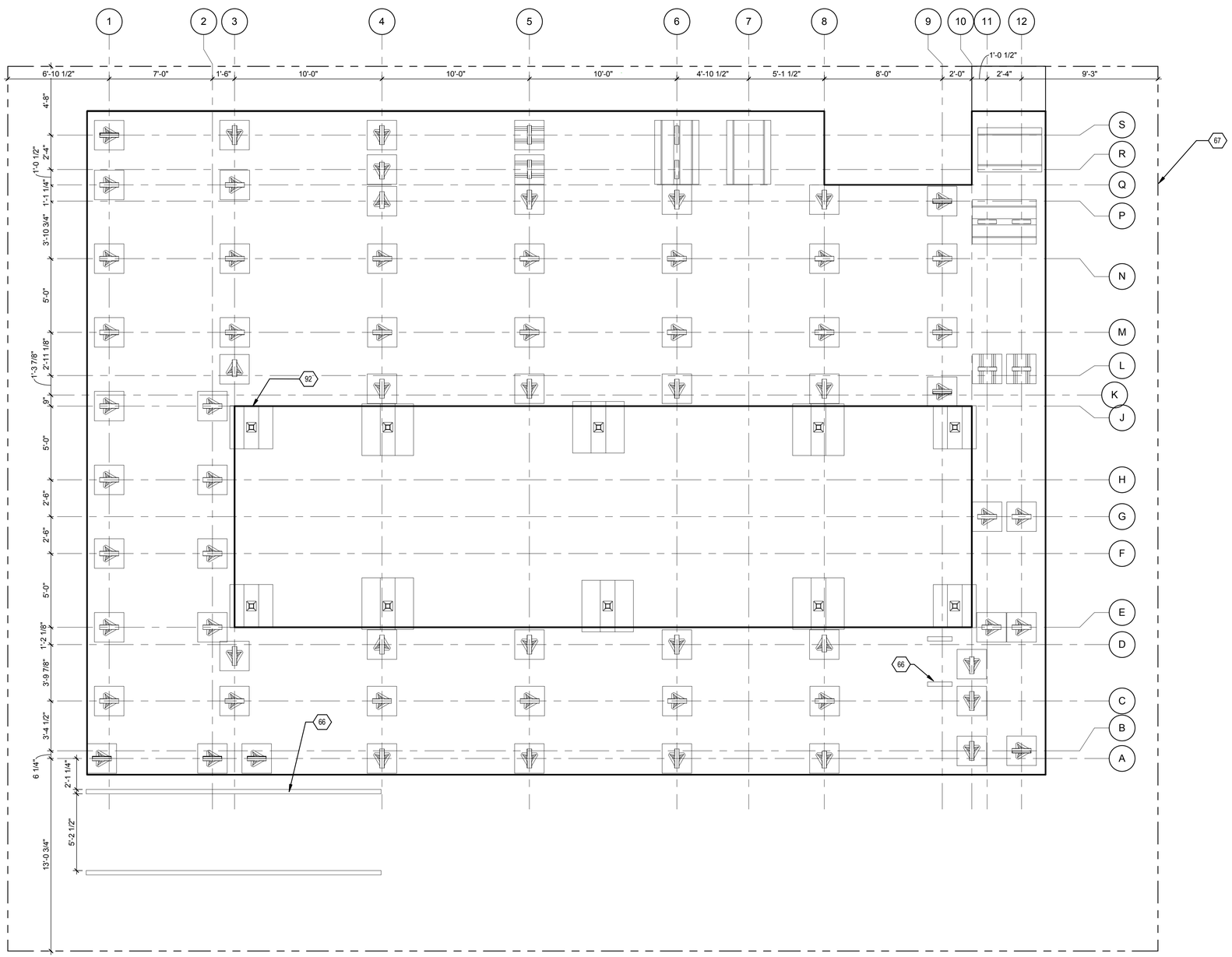


A1 SITE GRID

1/4" = 1'-0"

0 2' 4' 8'

8/13/2011 10:45:10 AM

## GENERAL SHEET NOTES

## REFERENCE KEYNOTES

## SHEET KEYNOTES

| | |
|---|---|
| 66 | TEMPORARY WATER TANK SUPPORT, (2) 20' LONG 4 X 4 AT SUPPLY, WASTE AND FIRE TANKS AND (2) 12" LONG 4 X 4 AT RAIN CISTERN. |
| 67 | TEMPORARY SITE BOUNDARY FOR WASHINGTON, D.C. NATIONAL MALL COMPETITION SITE |
| 92 | OUTLINE OF BUILDING ABOVE |

LIVING LIGHT


TEAM NAME: TENNESSEE

ADDRESS: UNIVERSITY OF TENNESSEE
1715 VOLUNTEER BLVD., RM 313
KNOXVILLE, TN 37996

CONTACT: LIVLIGHT@UTK.EDU
HTTP://LIVINGLIGHTUTK.COM


CONSULTANTS

JAMES ROSE ARCHITECT

MALLIA ENGINEERING

ROSS BRYAN ASSOCIATES

RICHARD KELSO

LEON TOLBERT

CLIENT

U.S. DEPARTMENT OF ENERGY

SOLAR DECATHLON 2011

WWW.SOLARDECATHLON.GOV

U.S. DEPARTMENT OF ENERGY SOLAR DECATHLON

| MARK | DATE | DESCRIPTION |
|---|---|---|

| | |
|---|---|
| LOT NUMBER: | 202 |
| DRAWN BY: | JAMES DYER |
| CHECKED BY: | JAMES ROSE |
| COPYRIGHT: | NONE: PROJECT IS PUBLIC DOMAIN |

SHEET TITLE

SITE GRID

C-103

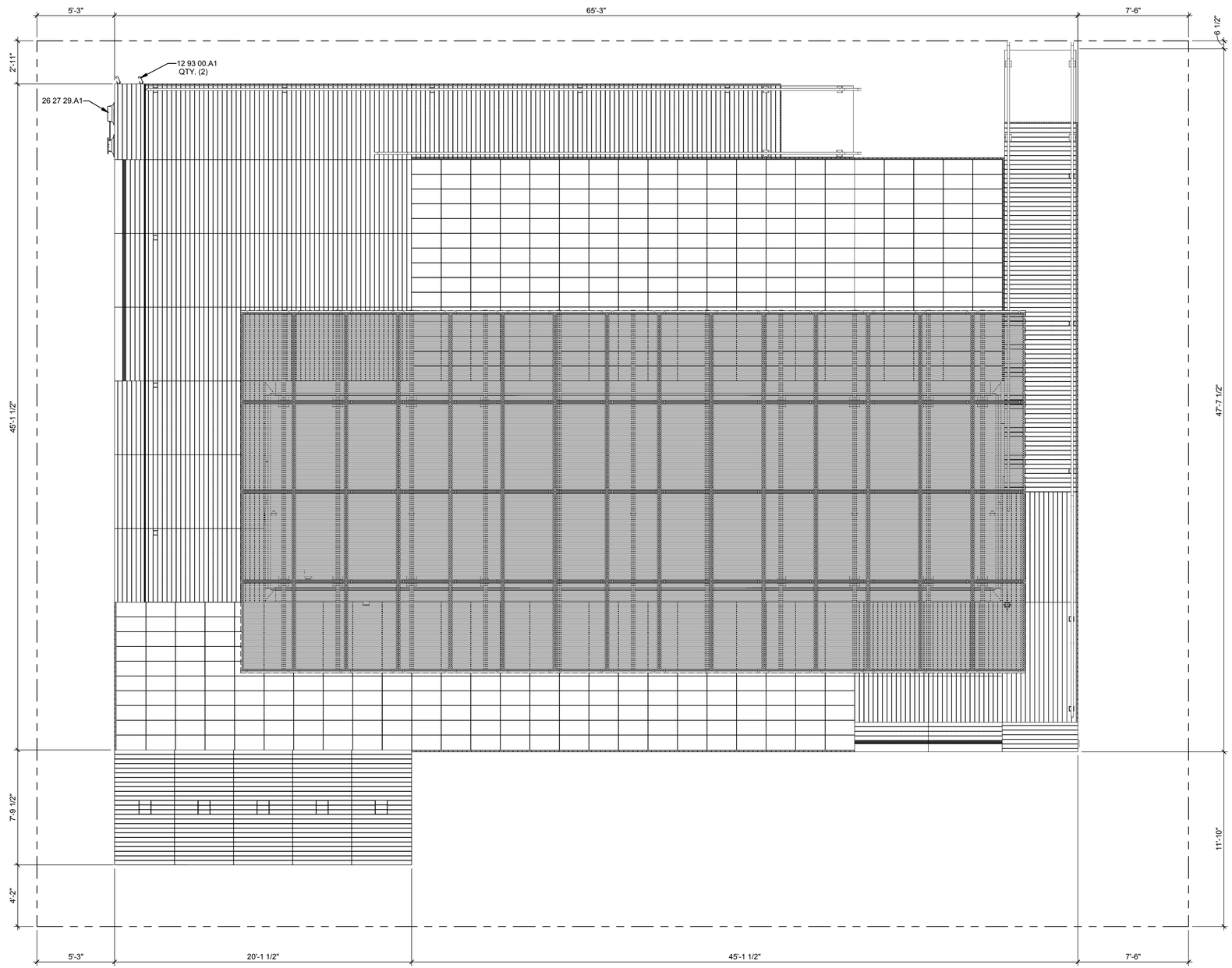


A1 SITE PLAN
1/4" = 1'-0"

8/13/2011 10:45:34 AM

## GENERAL SHEET NOTES

## REFERENCE KEYNOTES

| | |
|---|---|
| 12 93 00.A1 | BICYCLE RACK |
| 26 27 29.A1 | ELECTRICAL VEHICLE CHARGING STATION |

## SHEET KEYNOTES

LIVING LIGHT

| | |
|---|---|
| TEAM NAME: | TENNESSEE |
| ADDRESS: | UNIVERSITY OF TENNESSEE<br>1715 VOLUNTEER BLVD., RM 313<br>KNOXVILLE, TN 37996 |
| CONTACT: | LIVLIGHT@UTK.EDU<br>HTTP://LIVINGLIGHTUTK.COM |

CONSULTANTS

JAMES ROSE ARCHITECT
MALLIA ENGINEERING
ROSS BRYAN ASSOCIATES
RICHARD KELSO
LEON TOLBERT

CLIENT

U.S. DEPARTMENT OF ENERGY
SOLAR DECATHLON 2011
WWW.SOLARDECATHLON.GOV

U.S. DEPARTMENT OF ENERGY SOLAR DECATHLON

| MARK | DATE | DESCRIPTION |
|---|---|---|

| | |
|---|---|
| LOT NUMBER: | 202 |
| DRAWN BY: | DOUG BEASLEY |
| CHECKED BY: | JAMES ROSE |
| COPYRIGHT: | NONE: PROJECT IS PUBLIC DOMAIN |

SHEET TITLE

SITE PLAN

C-104

| EXTERIOR LIGHTING SCHEDULE | | | | | |
|---|---|---|---|---|---|
| REFERENCE KEYNOTE | TYPE | MANUFACTURER | MODEL | QUANTITY | BATTERY CAPACITY (Wh) |
| 26 56 29 | LED PAVER | METEOR LIGHTING | SH130C | 13 | 0.625 Wh/light |
| | | | | TOTAL BATTERY CAPACITY = | 8.125 Wh |

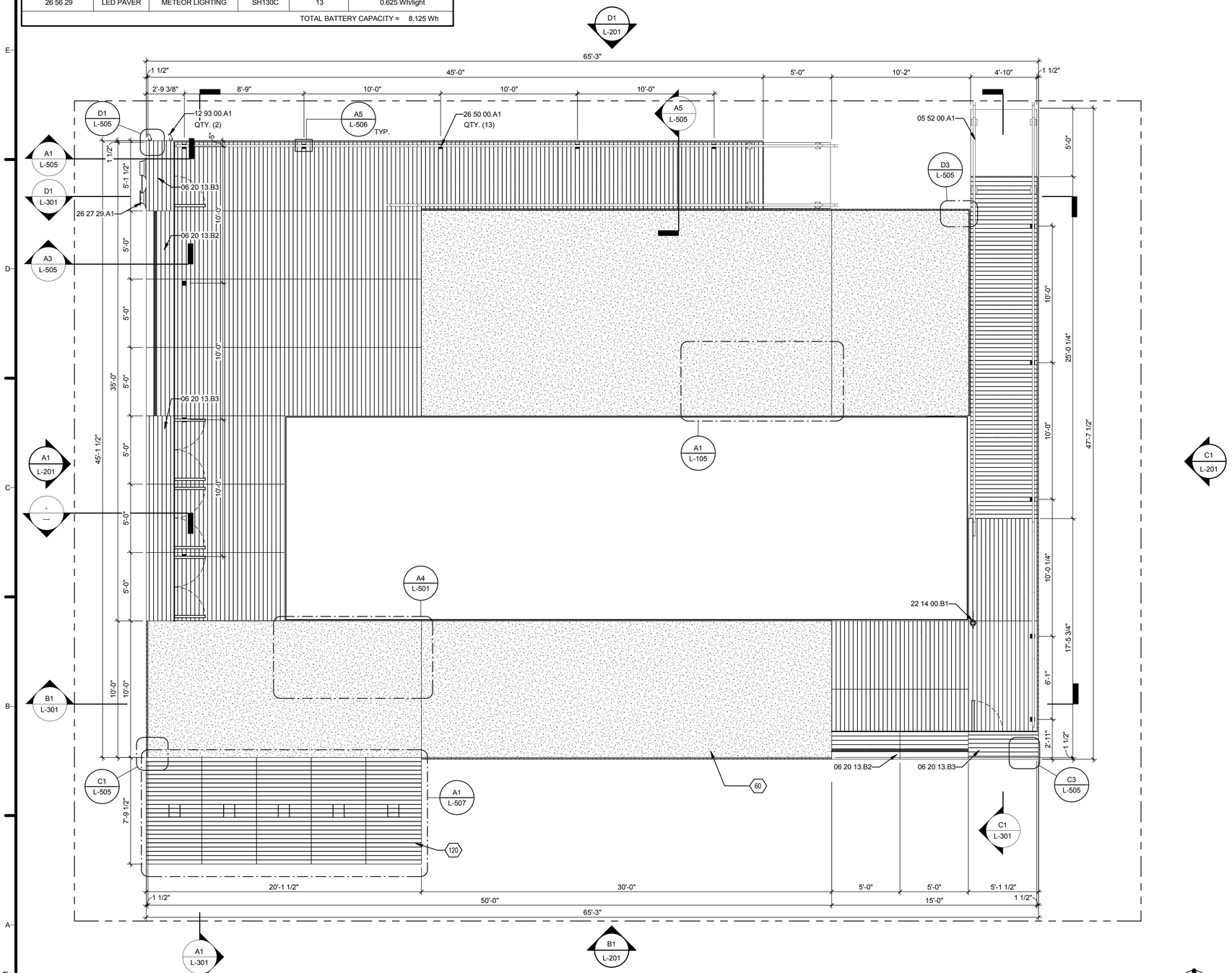


# A1 LANDSCAPE PLAN

1/4" = 1'-0"

0 2' 4' 8'

8/13/2011 10:49:43 AM

## GENERAL SHEET NOTES

## REFERENCE KEYNOTES

| | |
|---|---|
| 05 52 00.A1 | 1-1/2" ALUMINUM HANDRAIL |
| 06 20 13.B2 | HIGH BACK BENCH |
| 06 20 13.B3 | STORAGE CABINET |
| 12 93 00.A1 | BICYCLE RACK |
| 22 14 00.B1 | HAND PUMP |
| 26 27 29.A1 | ELECTRICAL VEHICLE CHARGING STATION |
| 26 50 00.A1 | SOLAR POWERED LED SITE LIGHTING |

## SHEET KEYNOTES

| | |
|---|---|
| 60 | REFERENCE SHEET L-105 FOR PLANTER PLAN AND PLANT SCHEDULE |
| 120 | WATER STORAGE TANK SHADE STRUCTURE, CONSTRUCT IN 4' MODULES. |

LIVING LIGHT


TEAM NAME: TENNESSEE

ADDRESS: UNIVERSITY OF TENNESSEE
1715 VOLUNTEER BLVD., RM 313
KNOXVILLE, TN 37996

CONTACT: LIVLIGHT@UTK.EDU
HTTP://LIVINGLIGHTUTK.COM

CONSULTANTS

JAMES ROSE ARCHITECT

MALLIA ENGINEERING

ROSS BRYAN ASSOCIATES

RICHARD KELSO

LEON TOLBERT


CLIENT

U.S. DEPARTMENT OF ENERGY

SOLAR DECATHLON 2011

WWW.SOLARDECATHLON.GOV

U.S. DEPARTMENT OF ENERGY SOLAR DECATHLON

| MARK | DATE | DESCRIPTION |
|---|---|---|

| | |
|---|---|
| LOT NUMBER: | 202 |
| DRAWN BY: | JAMES DYER |
| CHECKED BY: | MAURICE MALLIA |
| COPYRIGHT: | NONE: PROJECT IS PUBLIC DOMAIN |

SHEET TITLE

LANDSCAPE PLAN

L-101

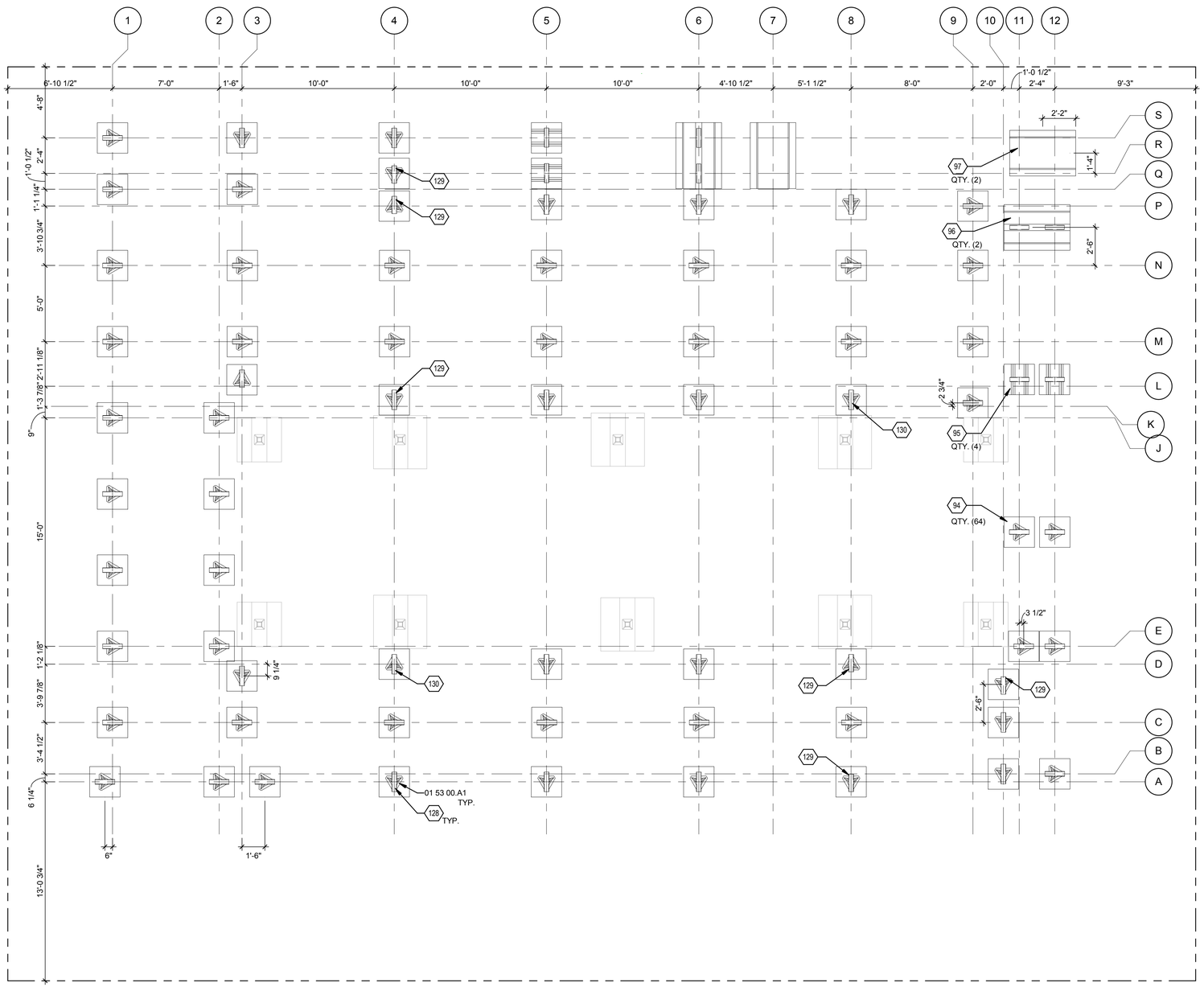


A1 DECK TEMPORARY FOUNDATION PLAN

1/4" = 1'-0"

0 2' 4' 8'

8/13/2011 10:49:48 AM

## GENERAL SHEET NOTES

## REFERENCE KEYNOTES

| | |
|---|---|
| 01 53 00.A1 | ADJUSTABLE DECK SUPPORT |

## SHEET KEYNOTES

| | |
|---|---|
| 94 | TYPICAL DECK FOOTING, REFERENCE SHEET L-503 |
| 95 | RAMP FOOTING, REFERENCE D1/L-506 |
| 96 | RAMP FOOTING, REFERENCE C1/L-506 |
| 97 | RAMP FOOTING, REFERENCE B1/L-506 |
| 128 | TYPICAL ADJUSTABLE FOOTING CONNECTION PLATE, REFERENCE D5/L-503 |
| 129 | SHORT ADJUSTABLE FOOTING CONNECTION PLATE, REFERENCE B5/L-503 |
| 130 | OFFSET ADJUSTABLE FOOTING CONNECTION PLATE, REFERENCE A5/L-503 |

LIVING LIGHT


TEAM NAME: TENNESSEE

ADDRESS: UNIVERSITY OF TENNESSEE
1715 VOLUNTEER BLVD., RM 313
KNOXVILLE, TN 37996

CONTACT: LIVLIGHT@UTK.EDU
HTTP://LIVINGLIGHTUTK.COM


CONSULTANTS

JAMES ROSE ARCHITECT

MALLIA ENGINEERING

ROSS BRYAN ASSOCIATES

RICHARD KELSO

LEON TOLBERT

CLIENT

U.S. DEPARTMENT OF ENERGY

SOLAR DECATHLON 2011

WWW.SOLARDECATHLON.GOV

U.S. DEPARTMENT OF ENERGY SOLAR DECATHLON

| MARK | DATE | DESCRIPTION |
|---|---|---|

| | |
|---|---|
| LOT NUMBER: | 202 |
| DRAWN BY: | JAMES DYER |
| CHECKED BY: | MAURICE MALLIA |
| COPYRIGHT: | NONE: PROJECT IS PUBLIC DOMAIN |

SHEET TITLE

DECK TEMPORARY FOUNDATION PLAN

L-102

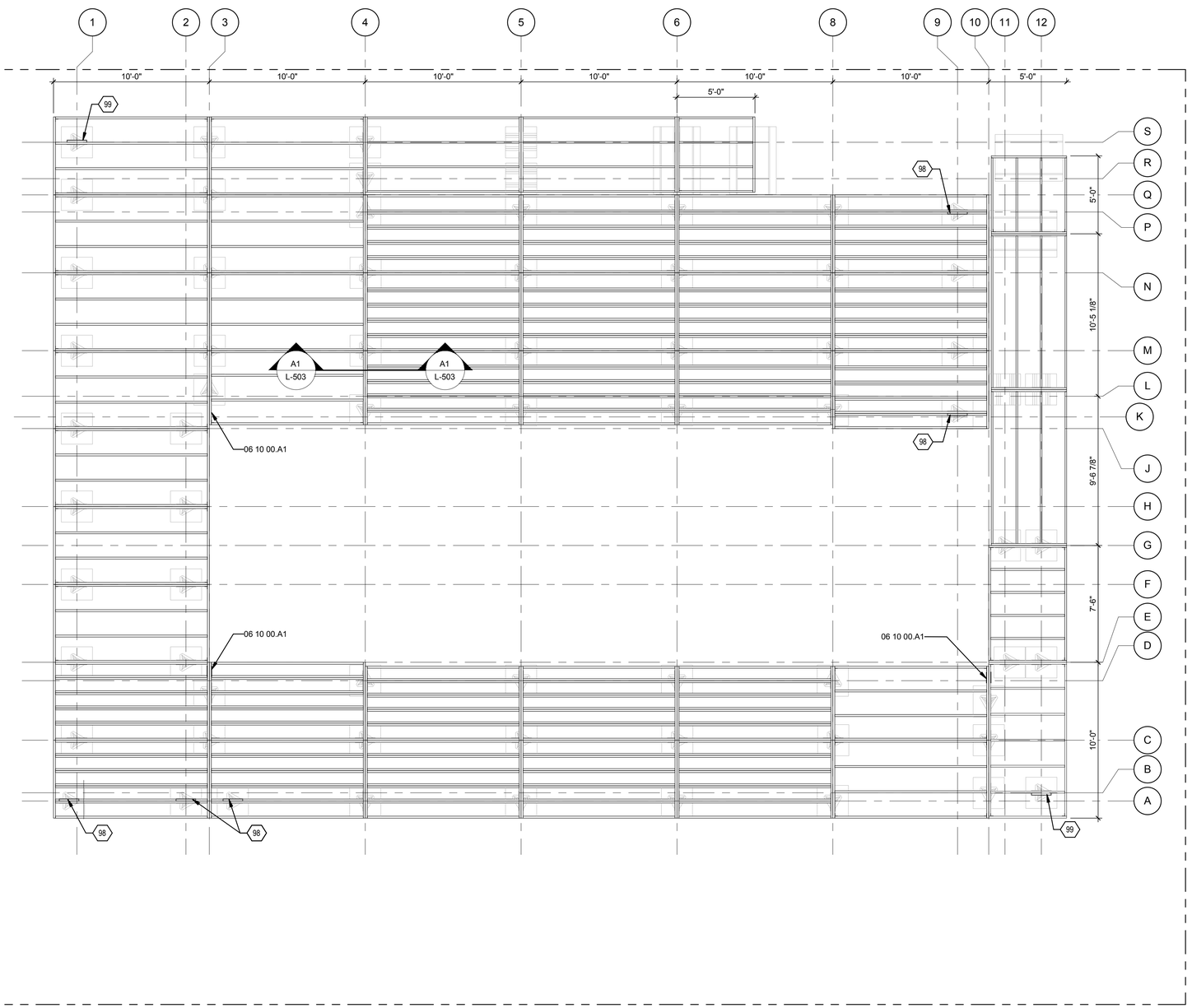


A1 DECK FRAMING PLAN

1/4" = 1'-0"

0 2' 4' 8'

8/13/2011 10:49:52 AM

## GENERAL SHEET NOTES

1. REFERENCE L-104 MODULAR PLAN FOR MORE INFORMATION

## REFERENCE KEYNOTES

| | |
|---|---|
| 06 10 00.A1 | SIMPSON STRONG TIE CC0Q4 |

## SHEET KEYNOTES

| | |
|---|---|
| 98 | ADDITIONAL 2X4 BLOCKING |
| 99 | ADDITIONAL 2X10 BLOCKING |

LIVING LIGHT


TEAM NAME: TENNESSEE

ADDRESS: UNIVERSITY OF TENNESSEE
1715 VOLUNTEER BLVD., RM 313
KNOXVILLE, TN 37996

CONTACT: LIVLIGHT@UTK.EDU
HTTP://LIVINGLIGHTUTK.COM

CONSULTANTS

JAMES ROSE ARCHITECT
MALLIA ENGINEERING
ROSS BRYAN ASSOCIATES
RICHARD KELSO
LEON TOLBERT


CLIENT

U.S. DEPARTMENT OF ENERGY
SOLAR DECATHLON 2011
WWW.SOLARDECATHLON.GOV

U.S. DEPARTMENT OF ENERGY SOLAR DECATHLON

| MARK | DATE | DESCRIPTION |
|---|---|---|

| | |
|---|---|
| LOT NUMBER: | 202 |
| DRAWN BY: | CHRIS BOEHME |
| CHECKED BY: | MAURICE MALLIA |
| COPYRIGHT: | NONE: PROJECT IS PUBLIC DOMAIN |

SHEET TITLE

DECK FRAMING PLAN

L-103

| DECK MODULE SCHEDULE | | | |
|---|---|---|---|
| MARK | TYPE | QUANTITY | DETAIL |
| 1 | DECK MODULE 1 | 11 | A1 / L-501 |
| 2 | DECK MODULE 2 | 1 | C1 / L-501 |
| 3 | DECK MODULE 3 | 1 | D1 / L-501 |
| 4 | DECK MODULE 4 | 2 | A4/ L-501 |
| 5 | RAMP MODULE 1 | 4 | A1/ L-502 |
| 6 | RAMP MODULE 2 | 2 | C1 / L-502 |
| 7 | PLANTER MODULE 1 | 16 | A4/ L-502 |
| 8 | PLANTER MODULE 2 | 6 | B4/ L-502 |
| 9 | WATER TANK SHADE STRUCTURE MODULE | 5 | A1/L-507 |

| SKIRT BOARD SCHEDULE | | | | | |
|---|---|---|---|---|---|
| MARK | TYPE | QUANTITY | WIDTH | HEIGHT | REMARK |
| 1 | SKIRT BOARD MODULE 1 | 26 | 4' - 11 3/4" | 2' - 4" | |
| 2 | SKIRT BOARD MODULE 2 | 3 | 5' - 1 1/2" | 2' - 4" | 1 |
| 3 | WATER TANK SHADE STRUCTURE SKIRT BOARD | 7 | VARIES | 2' - 8" | 2 |
| 4 | SKIRT BOARD MODULE 4 | 1 | 2' - 5 3/4" | 2' - 8" | 4 |
| 5 | SKIRT BOARD MODULE 5 | 8 | 4' - 11 3/4" | VARIES | 3 |
| 6 | SKIRT BOARD MODULE 6 | 3 | VARIES | VARIES | 3,6 |
| 7 | SKIRT BOARD MODULE 7 | 5 | 4' - 11 3/4" | 2' - 8" | 4 |
| 8 | SKIRT BOARD MODULE 8 | 2 | 4' - 11 3/4" | 2' - 8" | 4,5 |

GENERAL NOTES:

1. THE BOTTOM OF ALL SKIRT BOARD TO BE 2" ABOVE ANTICIPATED GRADE LEVEL.
2. REFERENCE SHEET L-505 FOR SKIRT BOARD DETAILS AT DECK CORNERS.

REMARKS:

1. REFERENCE DETAIL D1/L-505 FOR END CONDITION.
2. REFERENCE SHEET L/507 FOR WATER TANK SHADE STRUCTURE DETAILS.
3. CUT TOP OF SKIRT BOARD TO EXTEND 4" ABOVE THE WALKING SURFACE AND RUN PARALLEL WITH RAMP ANGLE PRIOR TO INSTALLATION. CUT BOTTOM OF SKIRT BOARD 2" ABOVE ANTICIPATED GRADE LEVEL PRIOR TO INSTALLATION.
4. TOP OF SKIRT BOARD TO EXTEND 4" ABOVE WALKING SURFACE.
5. DO NOT EXTEND TOP OF SKIRT BOARD AT LOCATION OF CABINETRY.
6. 1 X 12 WOOD TRIM SKIRT BOARD

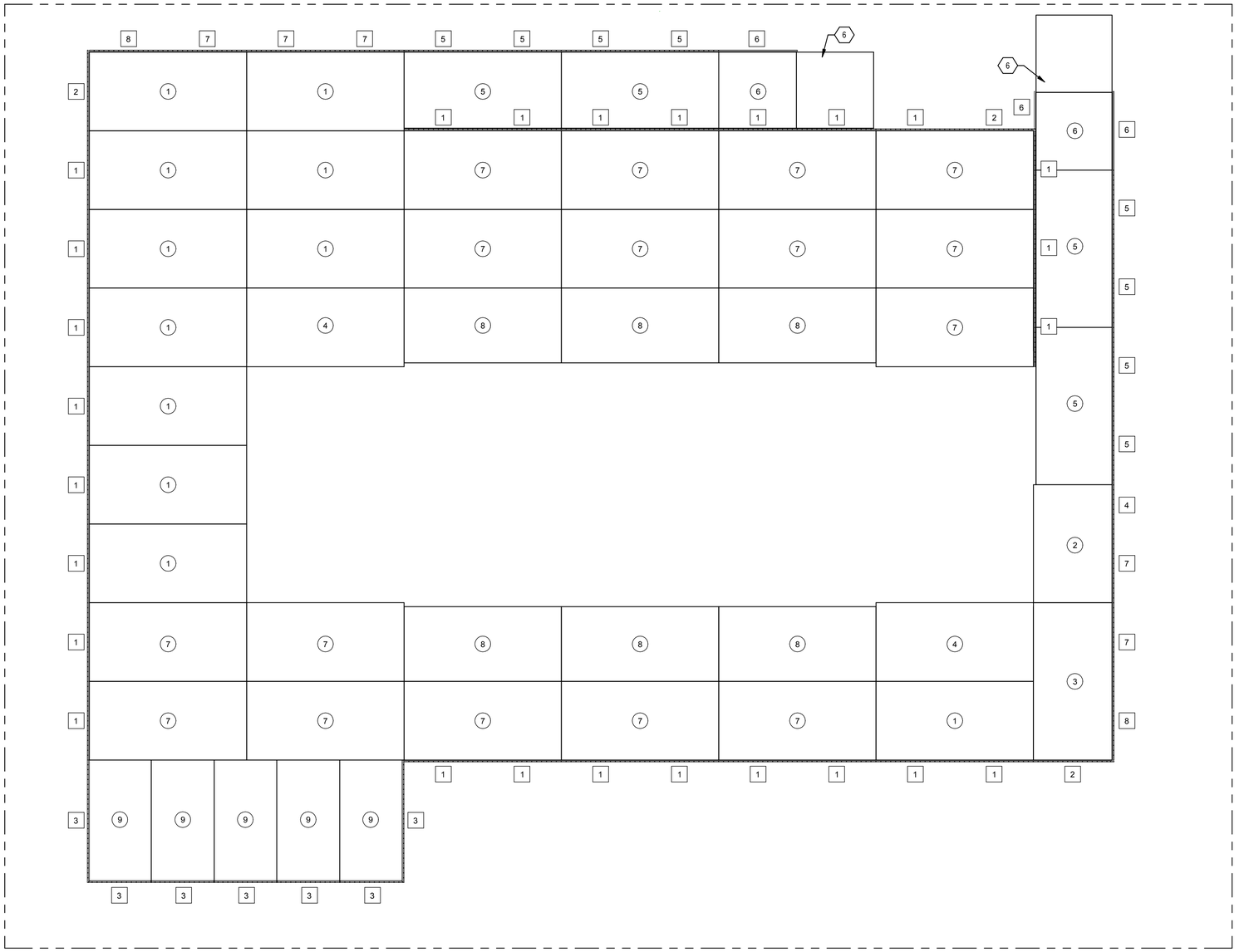


## GENERAL SHEET NOTES

1. REFERENCE SHEET L-501 FOR DECK MODULE SCHEDULE

## REFERENCE KEYNOTES

## SHEET KEYNOTES

6 STEEL TREAD PLATE RAMP NOSING, REFERENCE A1/506

LIVING LIGHT


TEAM NAME: TENNESSEE

ADDRESS: UNIVERSITY OF TENNESSEE
1715 VOLUNTEER BLVD., RM 313
KNOXVILLE, TN 37996

CONTACT: LIVLIGHT@UTK.EDU
HTTP://LIVINGLIGHTUTK.COM

CONSULTANTS

JAMES ROSE ARCHITECT

MALLIA ENGINEERING

ROSS BRYAN ASSOCIATES

RICHARD KELSO

LEON TOLBERT


CLIENT

U.S. DEPARTMENT OF ENERGY

SOLAR DECATHLON 2011

WWW.SOLARDECATHLON.GOV

U.S. DEPARTMENT OF ENERGY SOLAR DECATHLON

| MARK | DATE | DESCRIPTION |
|---|---|---|

| | |
|---|---|
| LOT NUMBER: | 202 |
| DRAWN BY: | CHRISTOPHER BOEHME |
| CHECKED BY: | MAURICE MALLIA |
| COPYRIGHT: | NONE: PROJECT IS PUBLIC DOMAIN |

SHEET TITLE

# DECK AND SKIRT BOARD MODULE PLAN

# L-104

8/13/2011 10:49:56 AM

| PLANTER SCHEDULE | | |
|---|---|---|
| SYMBOL | PLANT TYPE | TRAY SIZE |
| P1 | LOW SEDUM GRASS | 1'-0" X 2'-0" |
| P2 | PERENNIAL SEDUM | 1'-0" X 2'-0" |

NOTE: PLANTER TRAYS TO BE PROVIDED BY OTHERS

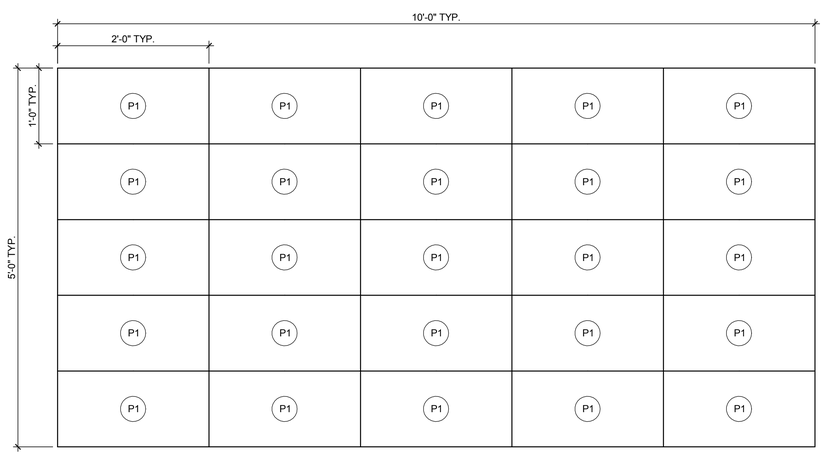


A1 TYPICAL LOW PLANTING PLAN
1" = 1'-0"

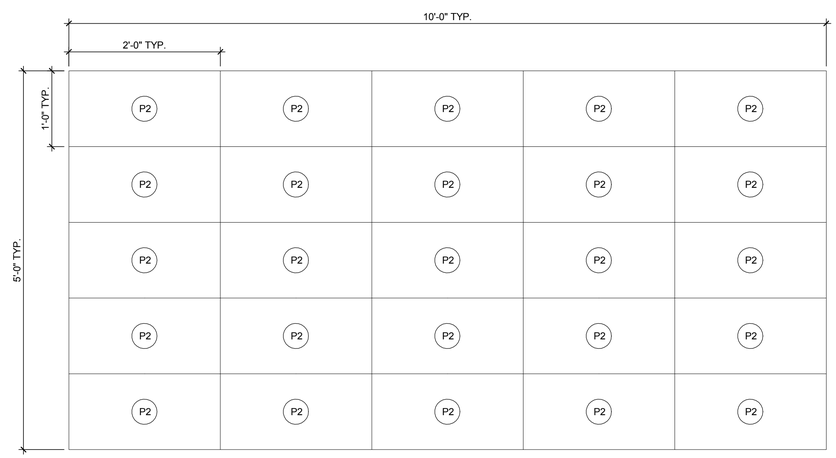


A4 TYPICAL HIGH PLANTING PLAN
1" = 1'-0"

## GENERAL SHEET NOTES

## REFERENCE KEYNOTES

## SHEET KEYNOTES

LIVING LIGHT


TEAM NAME: TENNESSEE
ADDRESS: UNIVERSITY OF TENNESSEE
1715 VOLUNTEER BLVD., RM 313
KNOXVILLE, TN 37996
CONTACT: LIVLIGHT@UTK.EDU
HTTP://LIVINGLIGHTUTK.COM


CONSULTANTS
JAMES ROSE ARCHITECT
MALLIA ENGINEERING
ROSS BRYAN ASSOCIATES
RICHARD KELSO
LEON TOLBERT

CLIENT
U.S. DEPARTMENT OF ENERGY
SOLAR DECATHLON 2011
WWW.SOLARDECATHLON.GOV

U.S. DEPARTMENT OF ENERGY SOLAR DECATHLON

| MARK | DATE | DESCRIPTION |
|---|---|---|

LOT NUMBER: 202
DRAWN BY: JAMES DYER
CHECKED BY: MAURICE MALLIA

COPYRIGHT: NONE: PROJECT IS PUBLIC DOMAIN


SHEET TITLE
PLANTER PLAN AND SCHEDULE

L-105

8/13/2011 10:49:58 AM

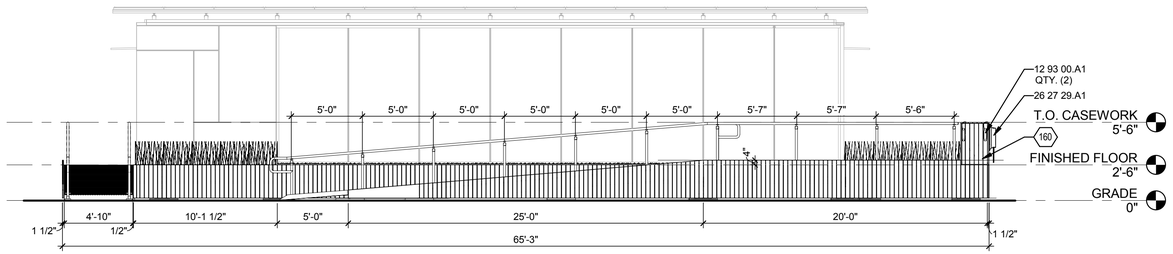


## D1 NORTH DECK ELEVATION

3/16" = 1'-0"

0 4' 8' 12'

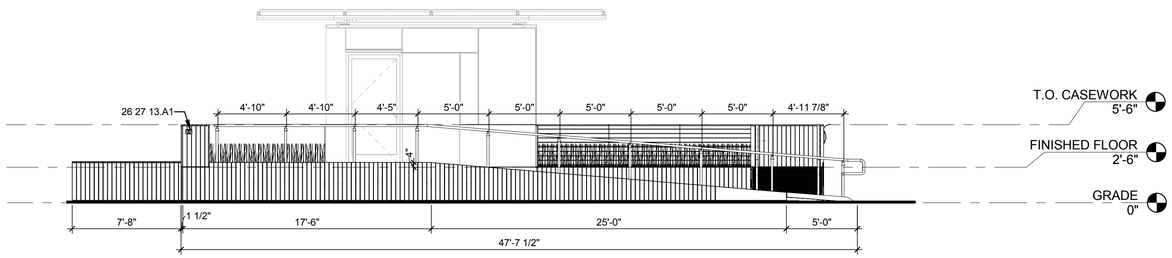


## C1 EAST DECK ELEVATION

3/16" = 1'-0"

0 4' 8' 12'

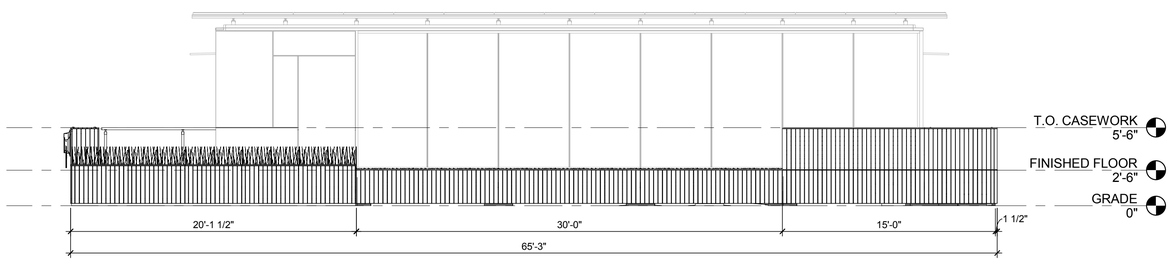


## B1 SOUTH DECK ELEVATION

3/16" = 1'-0"

0 4' 8' 12'

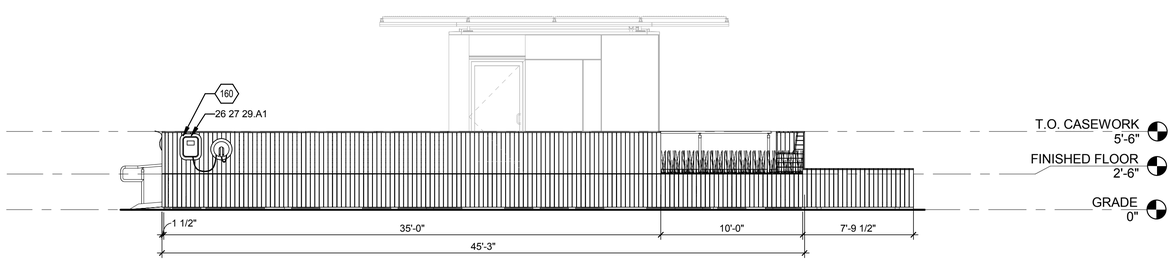


## A1 WEST DECK ELEVATION

3/16" = 1'-0"

0 4' 8' 12'

## GENERAL SHEET NOTES

1. REFERENCE SHEET L-506 FOR GUARDRAIL DETAIL TO BE PROVIDED AT HANDRAIL AND RAMP IF CHANGES IN ELEVATION RESULT IN DECK FLOOR HEIGHT BEING GREATER THAN 30" ABOVE GRADE.

## REFERENCE KEYNOTES

| | |
|---|---|
| 12 93 00.A1 | BICYCLE RACK |
| 26 27 13.A1 | ELECTRICAL METER HOUSING |
| 26 27 29.A1 | ELECTRICAL VEHICLE CHARGING STATION |

## SHEET KEYNOTES

| | |
|---|---|
| 160 | MOUNT ELECTRICAL VEHICLE CHARGER TO BACK OF CABINET. PROVIDE ADDITIONAL BLOCKING AS NEEDED. REFERENCE SHEET E-101 FOR WIRING. |

LIVING LIGHT


TEAM NAME: TENNESSEE

ADDRESS: UNIVERSITY OF TENNESSEE
1715 VOLUNTEER BLVD., RM 313
KNOXVILLE, TN 37996

CONTACT: LIVLIGHT@UTK.EDU
HTTP://LIVINGLIGHTUTK.COM

CONSULTANTS

JAMES ROSE ARCHITECT

MALLIA ENGINEERING

ROSS BRYAN ASSOCIATES

RICHARD KELSO

LEON TOLBERT


CLIENT

U.S. DEPARTMENT OF ENERGY

SOLAR DECATHLON 2011

WWW.SOLARDECATHLON.GOV

U.S. DEPARTMENT OF ENERGY SOLAR DECATHLON

| MARK | DATE | DESCRIPTION |
|---|---|---|

| | |
|---|---|
| LOT NUMBER: | 202 |
| DRAWN BY: | NELEA WALLING |
| CHECKED BY: | MAURICE MALLIA |
| COPYRIGHT: | NONE: PROJECT IS PUBLIC DOMAIN |

SHEET TITLE

# DECK ELEVATIONS

# L-201

8/13/2011 10:50:25 AM

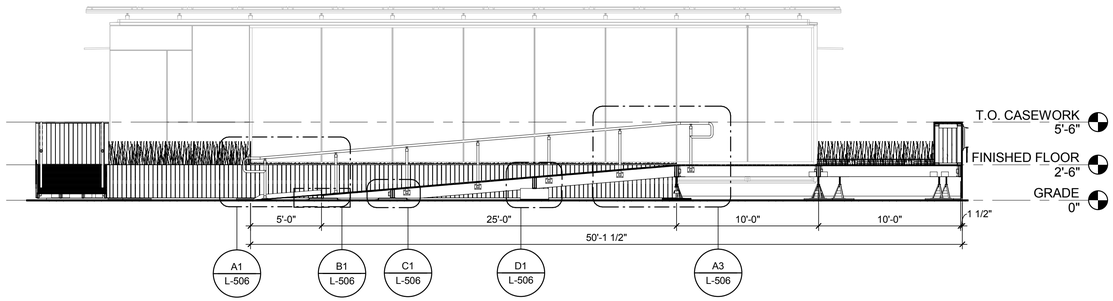


## D1 ENTRY RAMP SECTION

3/16" = 1'-0"

0 4' 8' 12'

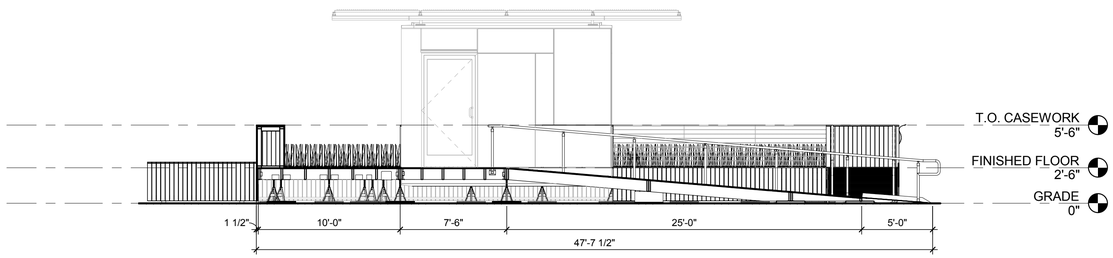


## C1 EXIT RAMP SECTION

3/16" = 1'-0"

0 4' 8' 12'

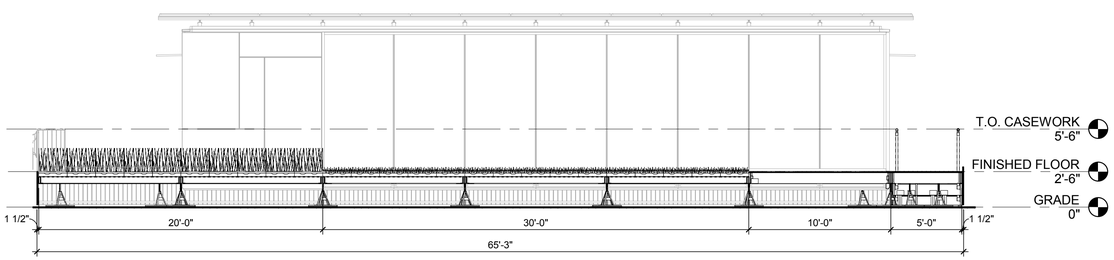


## B1 LONGITUDINAL SECTION

3/16" = 1'-0"

0 4' 8' 12'

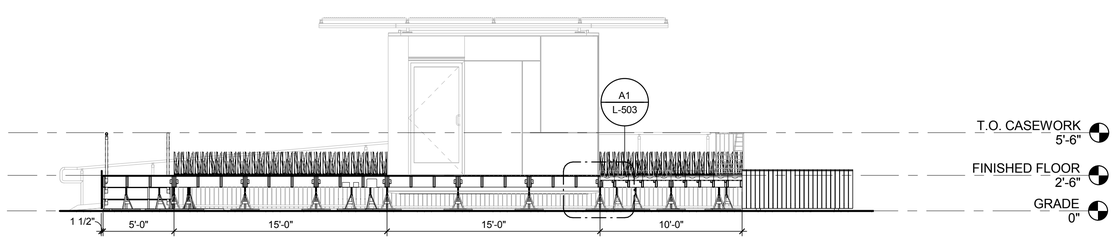


## A1 TRANSVERSE SECTION

3/16" = 1'-0"

0 4' 8' 12'

8/13/2011 10:50:49 AM

## GENERAL SHEET NOTES

1. REFERENCE SHEET L-506 FOR GUARDRAIL DETAIL TO BE PROVIDED AT HANDRAIL AND RAMP IF CHANGES IN ELEVATION RESULT IN DECK FLOOR HEIGHT BEING GREATER THAN 30" ABOVE GRADE.

## REFERENCE KEYNOTES

## SHEET KEYNOTES

LIVING LIGHT


TEAM NAME: TENNESSEE

ADDRESS: UNIVERSITY OF TENNESSEE
1715 VOLUNTEER BLVD., RM 313
KNOXVILLE, TN 37996

CONTACT: LIVLIGHT@UTK.EDU
HTTP://LIVINGLIGHTUTK.COM

CONSULTANTS

JAMES ROSE ARCHITECT

MALLIA ENGINEERING

ROSS BRYAN ASSOCIATES

RICHARD KELSO

LEON TOLBERT


CLIENT

U.S. DEPARTMENT OF ENERGY

SOLAR DECATHLON 2011

WWW.SOLARDECATHLON.GOV

U.S. DEPARTMENT OF ENERGY SOLAR DECATHLON

| MARK | DATE | DESCRIPTION |
|---|---|---|

| | |
|---|---|
| LOT NUMBER: | 202 |
| DRAWN BY: | NELEA WALLING |
| CHECKED BY: | MAURICE MALLIA |
| COPYRIGHT: | NONE: PROJECT IS PUBLIC DOMAIN |

SHEET TITLE

DECK SECTIONS

L-301

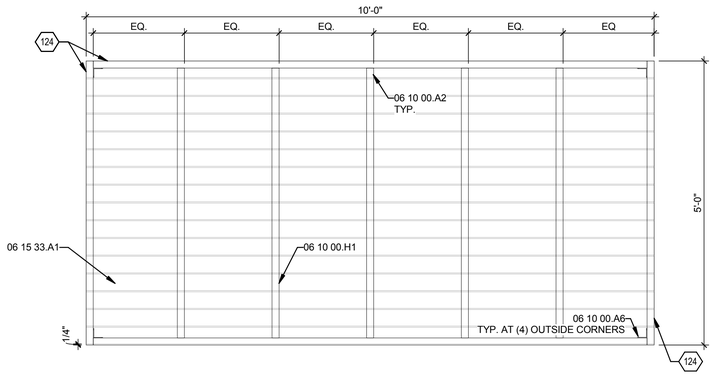


## D1 DECK MODULE 3

3/4" = 1'-0"

0 1' 2' 3'

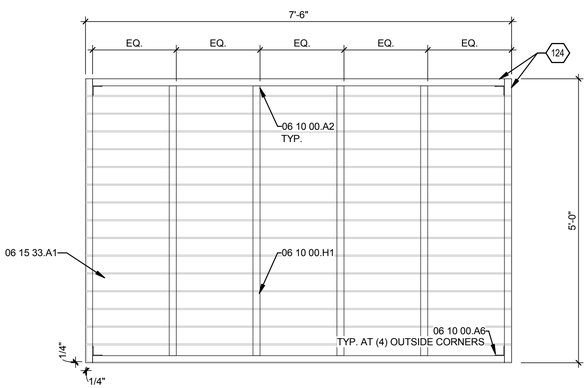


## C1 DECK MODULE 2

3/4" = 1'-0"

0 1' 2' 3'

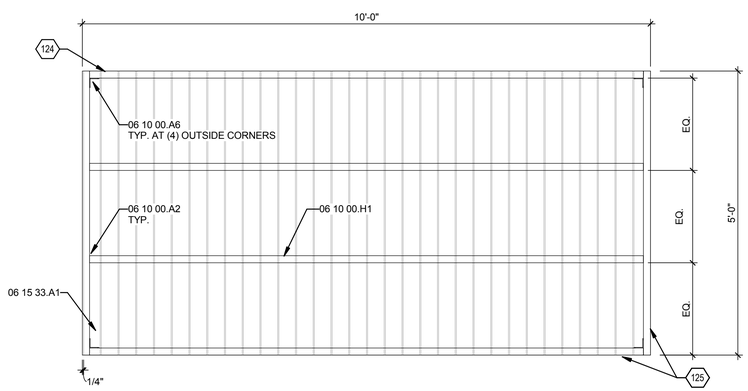


## A1 DECK MODULE 1

3/4" = 1'-0"

0 1' 2' 3'

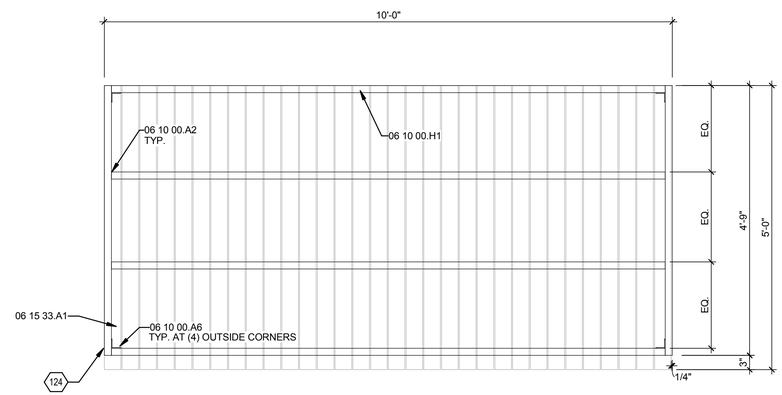


## A4 DECK MODULE 4

3/4" = 1'-0"

0 1' 2' 3'

## GENERAL SHEET NOTES

1. REFERENCE SHEET L-104 FOR DECK MODULE PLAN.
2. 1/4" GAP TYPICAL AT DECK BOARDS. NO GAP TO EXCEED 1/2".

## REFERENCE KEYNOTES

| | |
|---|---|
| 06 10 00.A2 | SIMPSON STRONG TIE LUS210 |
| 06 10 00.A6 | SIMPSON STRONG TIE ML26Z |
| 06 10 00.H1 | 2X10 TREATED WOOD FRAMING |
| 06 15 33.A1 | 1 X 4 WOOD DECKING |

## SHEET KEYNOTES

| | |
|---|---|
| 124 | ALIGN DECK BOARDS WITH THIS EDGE OF FRAME |
| 125 | FRAMING MEMBER TRIMMED DOWN AT (2) LOWER MODULES ONLY. |

LIVING LIGHT


TEAM NAME: TENNESSEE

ADDRESS: UNIVERSITY OF TENNESSEE
1715 VOLUNTEER BLVD., RM 313
KNOXVILLE, TN 37996

CONTACT: LIVLIGHT@UTK.EDU
HTTP://LIVINGLIGHTUTK.COM

CONSULTANTS

JAMES ROSE ARCHITECT

MALLIA ENGINEERING

ROSS BRYAN ASSOCIATES

RICHARD KELSO

LEON TOLBERT


CLIENT

U.S. DEPARTMENT OF ENERGY

SOLAR DECATHLON 2011

WWW.SOLARDECATHLON.GOV

U.S. DEPARTMENT OF ENERGY SOLAR DECATHLON

| MARK | DATE | DESCRIPTION |
|---|---|---|

| | |
|---|---|
| LOT NUMBER: | 202 |
| DRAWN BY: | JAMES DYER |
| CHECKED BY: | MAURICE MALLIA |
| COPYRIGHT: | NONE: PROJECT IS PUBLIC DOMAIN |

SHEET TITLE

# DECK MODULE DETAILS

# L-501

8/13/2011 10:50:53 AM

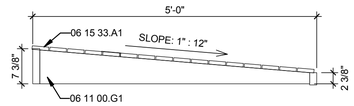


## E1 RAMP MODULE 2 ELEVATION

3/4" = 1'-0"

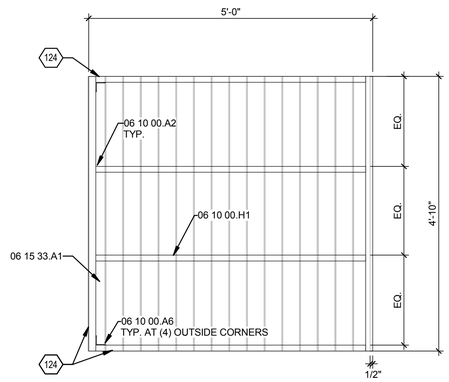


## C1 RAMP MODULE 2

3/4" = 1'-0"

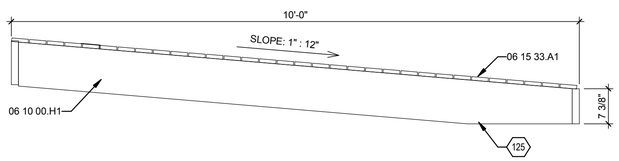


## B1 RAMP MODULE 1 ELEVATION

3/4" = 1'-0"

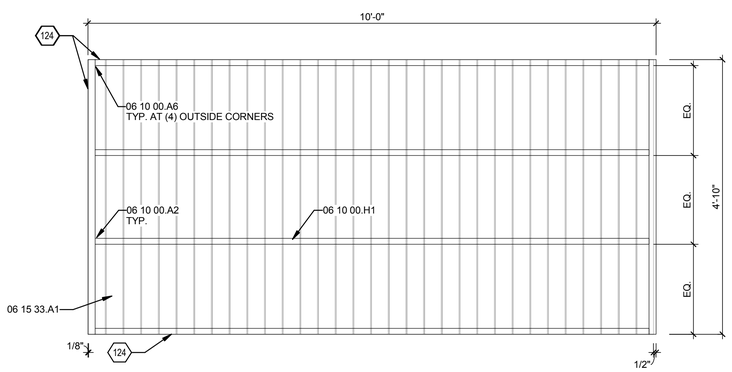


## A1 RAMP MODULE 1

3/4" = 1'-0"

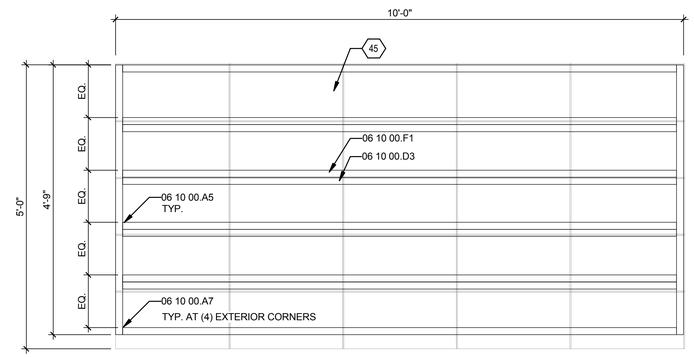


## B4 PLANTER MODULE 2

3/4" = 1'-0"

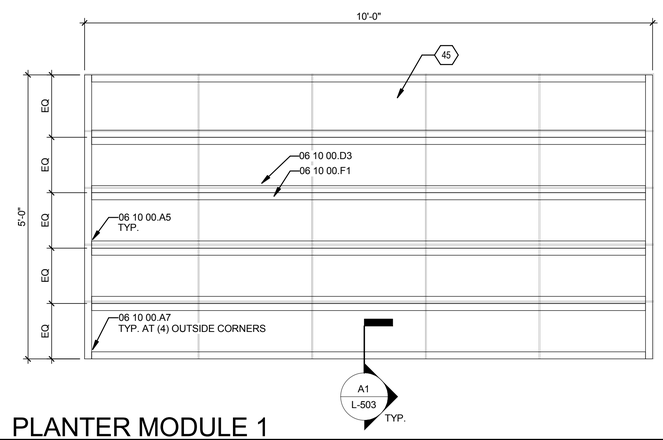


## A4 PLANTER MODULE 1

3/4" = 1'-0"

# GENERAL SHEET NOTES

1. REFERENCE SHEET L-104 FOR DECK MODULE PLAN.
2. 1/4" GAP TYPICAL AT DECK BOARDS. NO GAP TO EXCEED 1/2".

# REFERENCE KEYNOTES

| | |
|---|---|
| 06 10 00.A2 | SIMPSON STRONG TIE LUS210 |
| 06 10 00.A5 | SIMPSON STRONG TIE LUS26 |
| 06 10 00.A6 | SIMPSON STRONG TIE ML26Z |
| 06 10 00.A7 | SIMPSON STRONG TIE LUC26Z |
| 06 10 00.D3 | 2 X 2 FURRING |
| 06 10 00.F1 | 2X6 TREATED WOOD FRAMING |
| 06 10 00.H1 | 2X10 TREATED WOOD FRAMING |
| 06 11 00.G1 | 2X8 TREATED WOOD FRAMING |
| 06 15 33.A1 | 1 X 4 WOOD DECKING |

# SHEET KEYNOTES

| | |
|---|---|
| 45 | TYPICAL PLANTER TRAY. REFERENCE SHEET L-104 FOR PLANTER PLAN AND SCHEDULE |
| 124 | ALIGN DECK BOARDS WITH THIS EDGE OF FRAME |
| 125 | FRAMING MEMBER TRIMMED DOWN AT (2) LOWER MODULES ONLY. |

LIVING LIGHT


TEAM NAME: TENNESSEE

ADDRESS: UNIVERSITY OF TENNESSEE
1715 VOLUNTEER BLVD., RM 313
KNOXVILLE, TN 37996

CONTACT: LIVLIGHT@UTK.EDU
HTTP://LIVINGLIGHTUTK.COM

CONSULTANTS

JAMES ROSE ARCHITECT
MALLIA ENGINEERING
ROSS BRYAN ASSOCIATES
RICHARD KELSO
LEON TOLBERT


CLIENT

U.S. DEPARTMENT OF ENERGY
SOLAR DECATHLON 2011
WWW.SOLARDECATHLON.GOV

U.S. DEPARTMENT OF ENERGY SOLAR DECATHLON

| MARK | DATE | DESCRIPTION |
|---|---|---|

| | |
|---|---|
| LOT NUMBER: | 202 |
| DRAWN BY: | JAMES DYER |
| CHECKED BY: | MAURICE MALLIA |
| COPYRIGHT: | NONE: PROJECT IS PUBLIC DOMAIN |

SHEET TITLE

RAMP AND PLANTER MODULE DETAILS

L-502

8/13/2011 10:50:56 AM

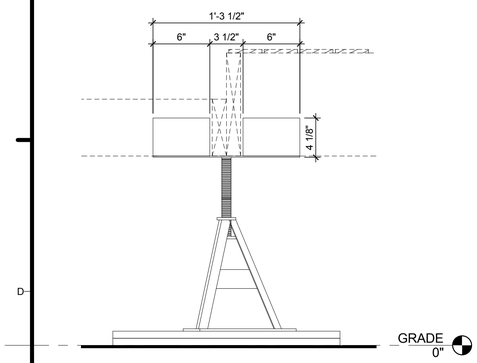


D1 TYP. CONNECTION PLATE ELEVATION
1 1/2" = 1'-0"

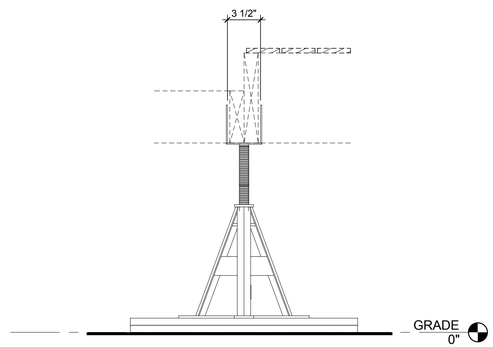


D3 TYP. CONNECTION PLATE ELEVATION
1 1/2" = 1'-0"

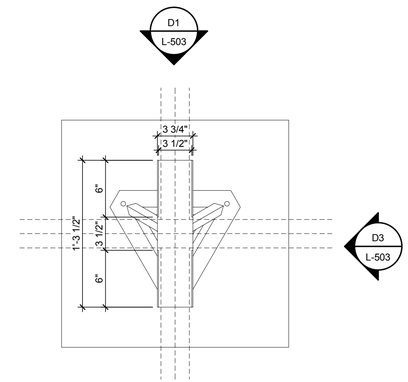


D5 TYP. CONNECTION PLATE PLAN
1 1/2" = 1'-0"

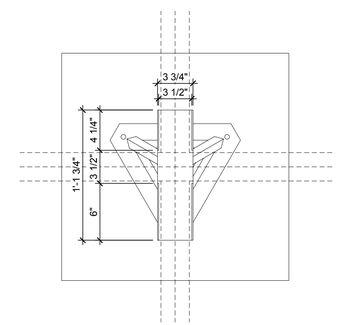


B5 SHORT CONNECTION PLATE PLAN
1 1/2" = 1'-0"

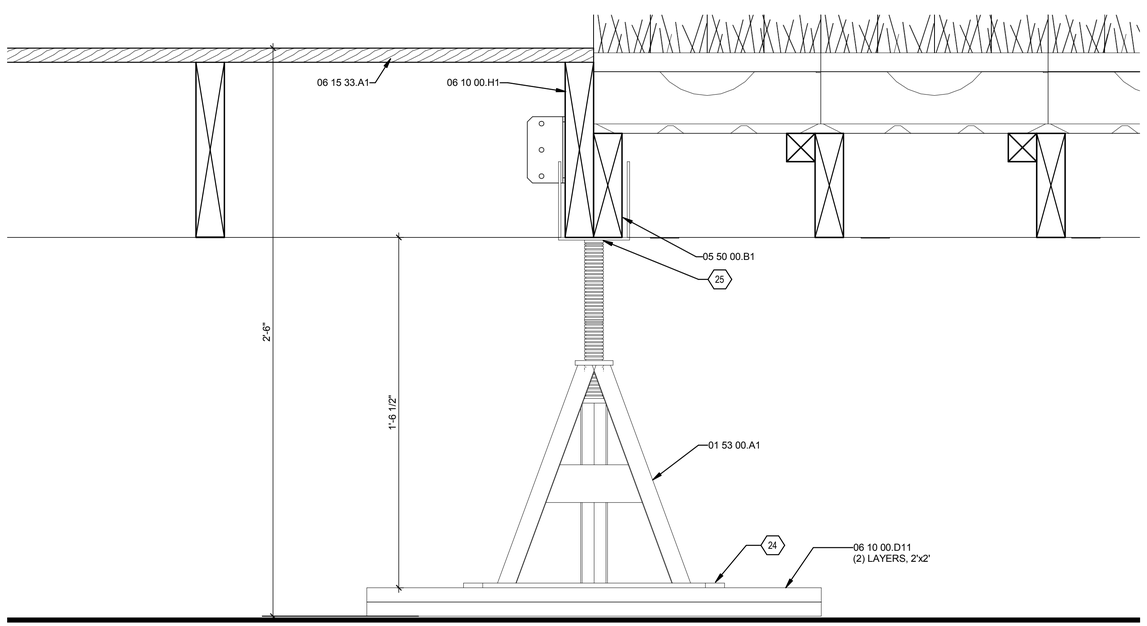


A1 DECK FOOTING SECTION
3" = 1'-0"

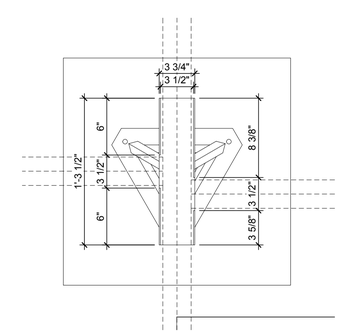


A5 OFFSET CONNECTION PLATE PLAN
1 1/2" = 1'-0"

## GENERAL SHEET NOTES

## REFERENCE KEYNOTES

| | |
|---|---|
| 01 53 00.A1 | ADJUSTABLE DECK SUPPORT |
| 05 50 00.B1 | FABRICATED 1/8" STEEL CONNECTION PLATE |
| 06 10 00.D11 | 3/4" PLYWOOD |
| 06 10 00.H1 | 2X10 TREATED WOOD FRAMING |
| 06 15 33.A1 | 1 X 4 WOOD DECKING |

## SHEET KEYNOTES

| | |
|---|---|
| 24 | (3) CONNECTION BOLTS |
| 25 | WELDED CONNECTION |

LIVING LIGHT


TEAM NAME: TENNESSEE
ADDRESS: UNIVERSITY OF TENNESSEE
1715 VOLUNTEER BLVD., RM 313
KNOXVILLE, TN 37996
CONTACT: LIVLIGHT@UTK.EDU
HTTP://LIVINGLIGHTUTK.COM


CONSULTANTS

JAMES ROSE ARCHITECT
MALLIA ENGINEERING
ROSS BRYAN ASSOCIATES
RICHARD KELSO
LEON TOLBERT

CLIENT
U.S. DEPARTMENT OF ENERGY
SOLAR DECATHLON 2011
WWW.SOLARDECATHLON.GOV

U.S. DEPARTMENT OF ENERGY SOLAR DECATHLON

| MARK | DATE | DESCRIPTION |
|---|---|---|

| | |
|---|---|
| LOT NUMBER: | 202 |
| DRAWN BY: | JAMES DYER |
| CHECKED BY: | MAURICE MALLIA |
| COPYRIGHT: | NONE: PROJECT IS PUBLIC DOMAIN |

SHEET TITLE
FOUNDATION SUPPORT DETAILS

L-503

8/13/2011 10:51:00 AM

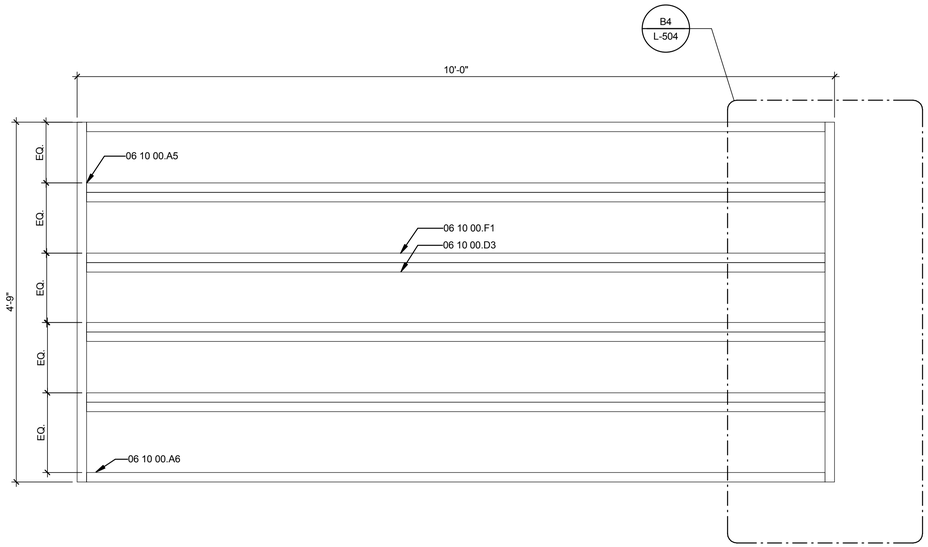


C1 PLANTER FRAME DETAIL
1" = 1'-0"

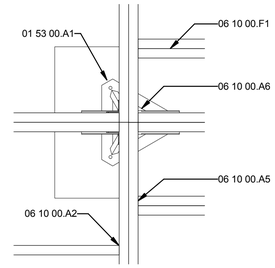


D4 CORNER CONNECTION DETAIL
1" = 1'-0"

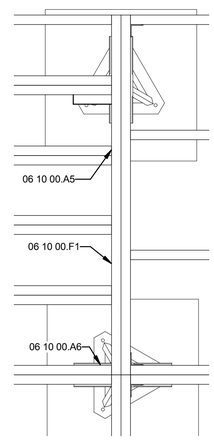


B4 SHORT SIDE CONNECTION DETAIL
1" = 1'-0"

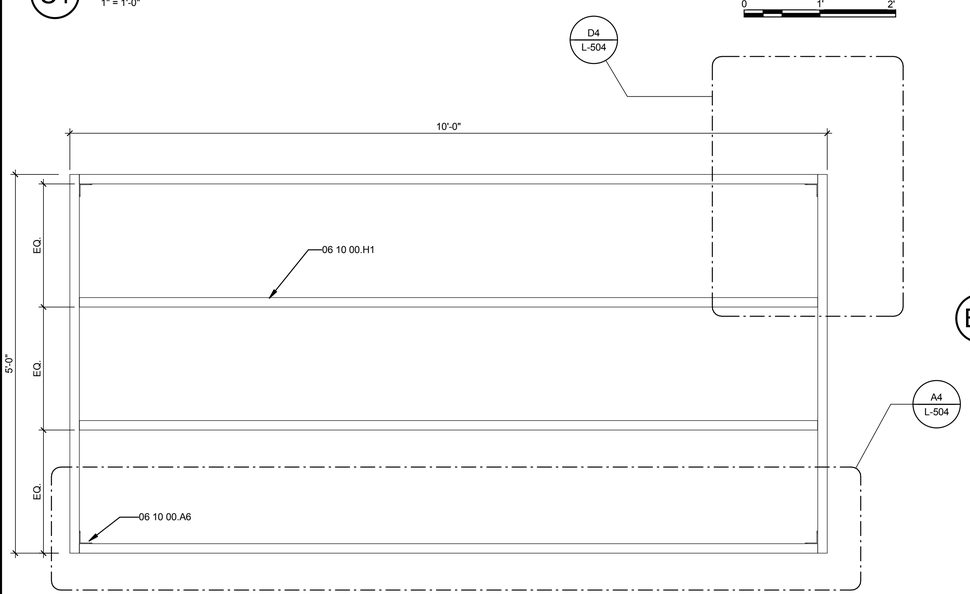


A1 DECKING FRAME DETAIL
1" = 1'-0"

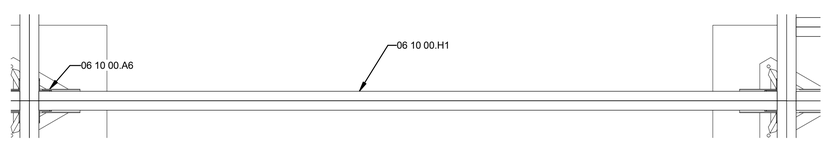


A4 LONG SIDE CONNECTION DETAIL
1" = 1'-0"

## GENERAL SHEET NOTES

## REFERENCE KEYNOTES

| | |
|---|---|
| 01 53 00.A1 | ADJUSTABLE DECK SUPPORT |
| 06 10 00.A2 | SIMPSON STRONG TIE LUS210 |
| 06 10 00.A5 | SIMPSON STRONG TIE LUS26 |
| 06 10 00.A6 | SIMPSON STRONG TIE ML26Z |
| 06 10 00.D3 | 2 X 2 FURRING |
| 06 10 00.F1 | 2X6 TREATED WOOD FRAMING |
| 06 10 00.H1 | 2X10 TREATED WOOD FRAMING |

## SHEET KEYNOTES

LIVING LIGHT


TEAM NAME: TENNESSEE
ADDRESS: UNIVERSITY OF TENNESSEE
1715 VOLUNTEER BLVD., RM 313
KNOXVILLE, TN 37996
CONTACT: LIVLIGHT@UTK.EDU
HTTP://LIVINGLIGHTUTK.COM


CONSULTANTS
JAMES ROSE ARCHITECT
MALLIA ENGINEERING
ROSS BRYAN ASSOCIATES
RICHARD KELSO
LEON TOLBERT

CLIENT
U.S. DEPARTMENT OF ENERGY
SOLAR DECATHLON 2011
WWW.SOLARDECATHLON.GOV

U.S. DEPARTMENT OF ENERGY SOLAR DECATHLON

| MARK | DATE | DESCRIPTION |
|---|---|---|

| | |
|---|---|
| LOT NUMBER: | 202 |
| DRAWN BY: | JAMES DYER |
| CHECKED BY: | MAURICE MALLIA |
| COPYRIGHT: | NONE: PROJECT IS PUBLIC DOMAIN |

SHEET TITLE
DECK FRAMING DETAILS

L-504

8/13/2011 10:51:03 AM

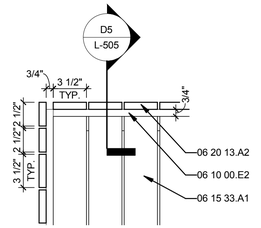


D1 SKIRT BOARD PLAN DETAIL AT NW CORNER
1 1/2" = 1'-0"

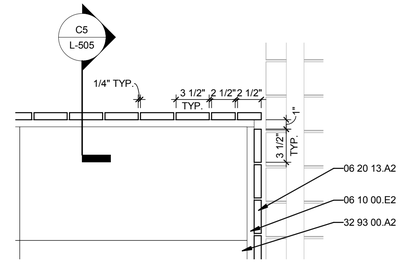


D3 SKIRT BOARD PLAN DETAIL AT NE CORNER
1 1/2" = 1'-0"

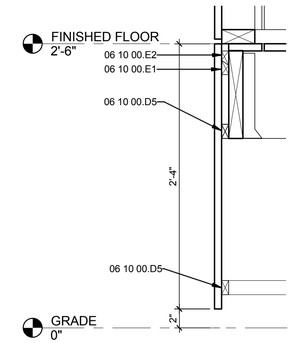


D5 SKIRT DETAIL AT DECK
1 1/2" = 1'-0"

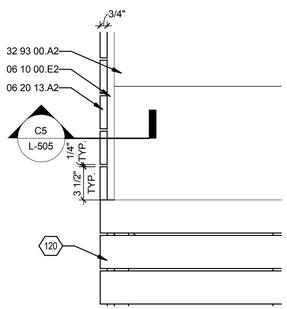


C1 SKIRT BOARD PLAN DETAIL AT SW CORNER
1 1/2" = 1'-0"

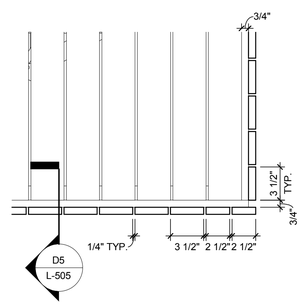


C3 SKIRT BOARD PLAN DETAIL AT SE CORNER
1 1/2" = 1'-0"

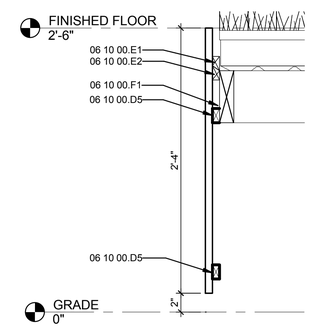


C5 SKIRT DETAIL AT PLANTER
1 1/2" = 1'-0"

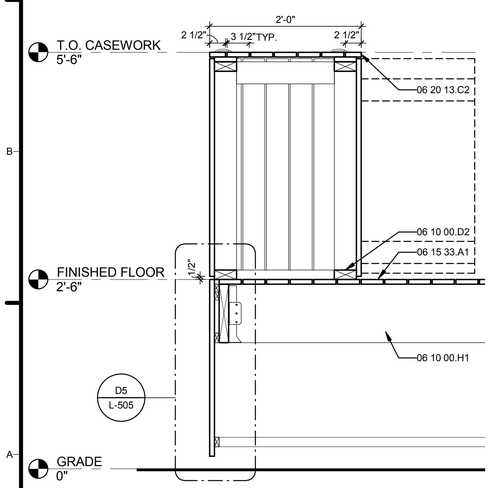


A1 OUTDOOR CABINET SECTION
1" = 1'-0"

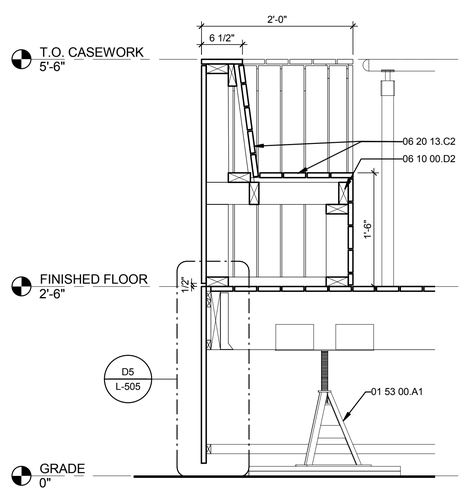


A3 OUTDOOR BENCH SECTION
1" = 1'-0"

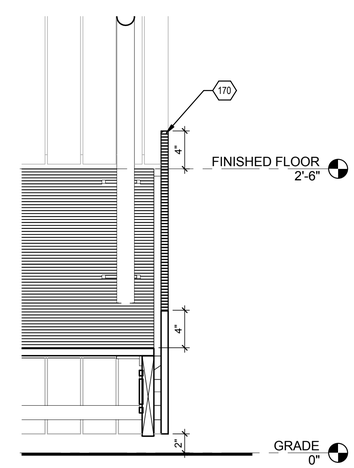


A5 SKIRT DETAIL AT RAMP
1 1/2" = 1'-0"

## GENERAL SHEET NOTES

1. 1/4" GAP TYPICAL AT WOOD DECKING.

## REFERENCE KEYNOTES

| | |
|---|---|
| 01 53 00.A1 | ADJUSTABLE DECK SUPPORT |
| 06 10 00.D2 | TREATED 2X4 |
| 06 10 00.D5 | 1 X 2 FURRING |
| 06 10 00.E1 | 1 X 2 WOOD CLEAT ATTACHED TO 2 X FRAMING |
| 06 10 00.E2 | 1 X 2 WOOD CLEAT ATTACHED TO SKIRT BOARD |
| 06 10 00.F1 | 2X6 TREATED WOOD FRAMING |
| 06 10 00.H1 | 2X10 TREATED WOOD FRAMING |
| 06 15 33.A1 | 1 X 4 WOOD DECKING |
| 06 20 13.A2 | 1 X 4 CYPRESS SKIRT BOARD |
| 06 20 13.C2 | 1X4 CYPRESS |
| 32 93 00.A2 | PLANTER TRAY WITH HIGH PLANTS |

## SHEET KEYNOTES

| | |
|---|---|
| 120 | WATER STORAGE TANK SHADE STRUCTURE, CONSTRUCT IN 4' MODULES. |
| 170 | EXTEND SKIRT BOARD 4" ABOVE WALKING SURFACE AT RAMPS AND ALONG NORTH AND EAST EDGES OF DECK |

LIVING LIGHT


TEAM NAME: TENNESSEE
ADDRESS: UNIVERSITY OF TENNESSEE
1715 VOLUNTEER BLVD., RM 313
KNOXVILLE, TN 37996
CONTACT: LIVLIGHT@UTK.EDU
HTTP://LIVINGLIGHTUTK.COM


CONSULTANTS

JAMES ROSE ARCHITECT
MALLIA ENGINEERING
ROSS BRYAN ASSOCIATES
RICHARD KELSO
LEON TOLBERT

CLIENT

U.S. DEPARTMENT OF ENERGY
SOLAR DECATHLON 2011
WWW.SOLARDECATHLON.GOV

U.S. DEPARTMENT OF ENERGY SOLAR DECATHLON

| MARK | DATE | DESCRIPTION |
|---|---|---|

| | |
|---|---|
| LOT NUMBER: | 202 |
| DRAWN BY: | KEVIN CHAMBERLIN |
| CHECKED BY: | MAURICE MALLIA |
| COPYRIGHT: | NONE: PROJECT IS PUBLIC DOMAIN |

SHEET TITLE

DECK CASEWORK AND SKIRT BOARD DETAILS

L-505

8/13/2011 10:51:07 AM

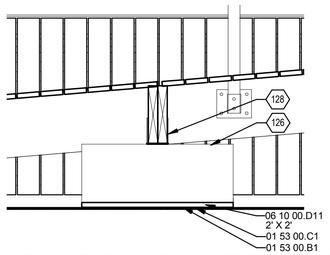


## D1 RAMP FOOTING DETAIL 3
1" = 1'-0"

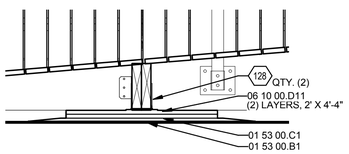


## C1 RAMP FOOTING DETAIL 2
1" = 1'-0"

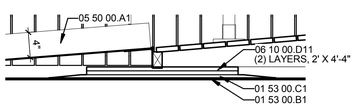


## B1 RAMP FOOTING DETAIL 1
1" = 1'-0"

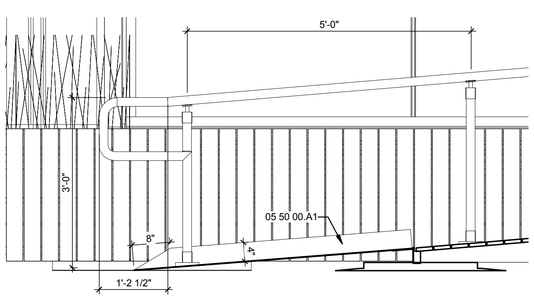


## A1 END OF RAMP HANDRAIL CONDITION
3/4" = 1'-0"

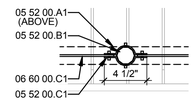


## E3 GUARD PLAN DETAIL IF T.O. DECK > 30"
1 1/2" = 1'-0"

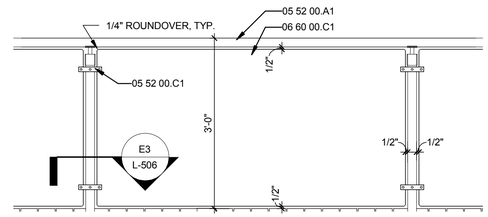


## D3 GUARDRAIL DETAIL IF T.O. DECK > 30"
3/4" = 1'-0"

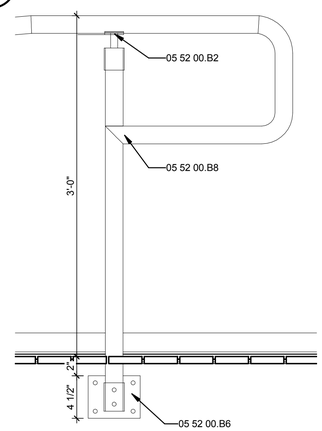


## B3 HANDRAIL CONNECTION DETAIL
1 1/2" = 1'-0"

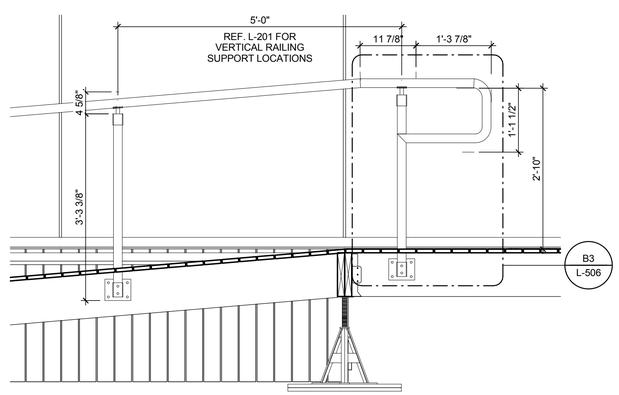


## A3 RAMP TO DECK HANDRAIL CONDITION
3/4" = 1'-0"

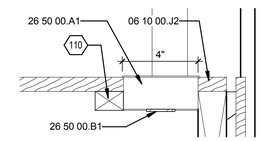


## D5 LIGHT SECTION DETAIL
3" = 1'-0"

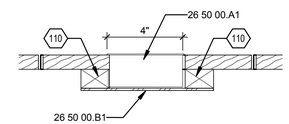


## C5 LIGHT SECTION DETAIL
3" = 1'-0"

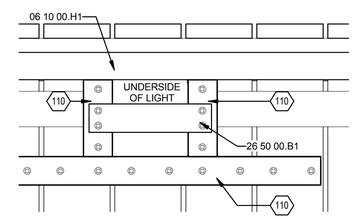


## B5 LIGHT PLAN DETAIL (BELOW)
3" = 1'-0"

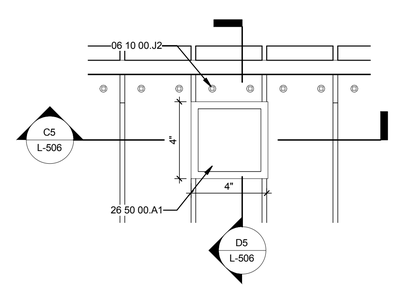


## A5 LIGHT PLAN DETAIL (ABOVE)
3" = 1'-0"

## GENERAL SHEET NOTES

1. REFERENCE SHEET D3/L-506 AND E3/L-506 FOR GUARDRAIL DETAIL TO BE PROVIDED AT RAMP AND HANDRAIL IF CHANGES IN ELEVATION RESULT IN DECK FLOOR HEIGHT BEING GREATER THAN 30" ABOVE GRADE.

## REFERENCE KEYNOTES

| | |
|---|---|
| 01 53 00.B1 | GEO TEXTILE MAT |
| 01 53 00.C1 | SAND |
| 05 50 00.A1 | 5' X 5' - 8" METAL PLATE, TURN UP SIDES OF PLATE 4". TAPER DOWN SIDES TO 0" IN A DISTANCE OF 8" AT BASE OF RAMP. |
| 05 52 00.A1 | 1-1/2" ALUMINUM HANDRAIL |
| 05 52 00.B1 | 1-1/2" ALUMINUM POST |
| 05 52 00.B2 | 1-1/2" ADJUSTABLE HANDRAIL BRACKET |
| 05 52 00.B6 | 1-1/2" EXTRUDED WALL FLANGE |
| 05 52 00.B8 | 1-1/2" POST RETURN SWIVEL-RIGHT |
| 05 52 00.C1 | 1" ALUMINUM STRAP |
| 06 10 00.D11 | 3/4" PLYWOOD |
| 06 10 00.H1 | 2X10 TREATED WOOD FRAMING |
| 06 10 00.J2 | 1 X 4 TREATED FILLER |
| 06 60 00.C1 | 1/8" CLEAR POLYCARBONATE |
| 26 50 00.A1 | SOLAR POWERED LED SITE LIGHTING |
| 26 50 00.B1 | SITE LIGHTING ANCHOR PLATE |

## SHEET KEYNOTES

| | |
|---|---|
| 110 | PRESSURE TREATED 2 X 2 CUT DOWN TO 1" TALL |
| 126 | (2) SETS OF (2) 2 X 10 FRAMING BENEATH EACH CONNECTION PLATE, OFFSET 1" FROM OUTSIDE EDGE OF PLATE |
| 128 | TYPICAL ADJUSTABLE FOOTING CONNECTION PLATE, REFERENCE D5/L-503 |

LIVING LIGHT


TEAM NAME: TENNESSEE
ADDRESS: UNIVERSITY OF TENNESSEE
1715 VOLUNTEER BLVD., RM 313
KNOXVILLE, TN 37996
CONTACT: LIVLIGHT@UTK.EDU
HTTP://LIVINGLIGHTUTK.COM

CONSULTANTS
JAMES ROSE ARCHITECT
MALLIA ENGINEERING
ROSS BRYAN ASSOCIATES
RICHARD KELSO
LEON TOLBERT


CLIENT
U.S. DEPARTMENT OF ENERGY
SOLAR DECATHLON 2011
WWW.SOLARDECATHLON.GOV

U.S. DEPARTMENT OF ENERGY SOLAR DECATHLON

| MARK | DATE | DESCRIPTION |
|---|---|---|

| | |
|---|---|
| LOT NUMBER: | 202 |
| DRAWN BY: | KRISTA GRAVES |
| CHECKED BY: | MAURICE MALLIA |
| COPYRIGHT: | NONE: PROJECT IS PUBLIC DOMAIN |

SHEET TITLE
RAMP AND DECK LIGHTING DETAILS

L-506

8/13/2011 10:51:15 AM

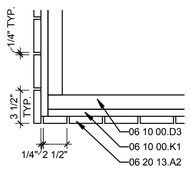


## E1 SHADE STRUCTURE PLAN DETAIL

1 1/2" = 1'-0"

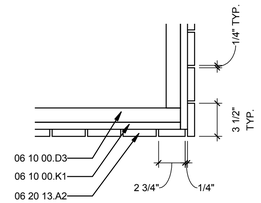


## E3 SHADE STRUCTURE PLAN DETAIL

1 1/2" = 1'-0"

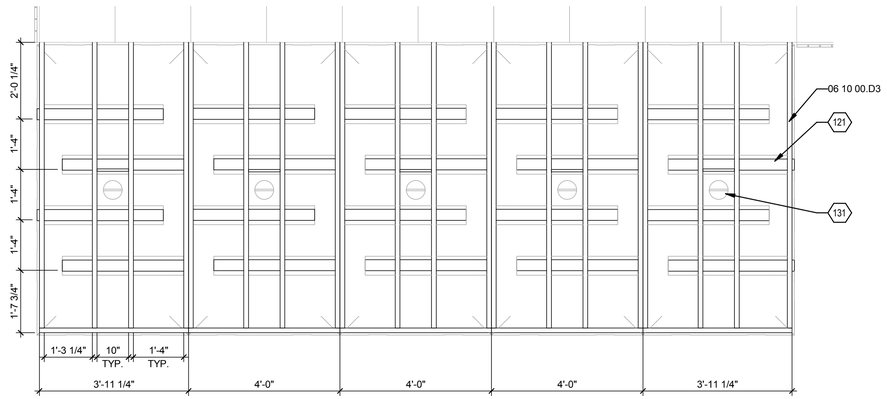


## C1 SHADE STRUCTURE FRAMING PLAN

1/2" = 1'-0"

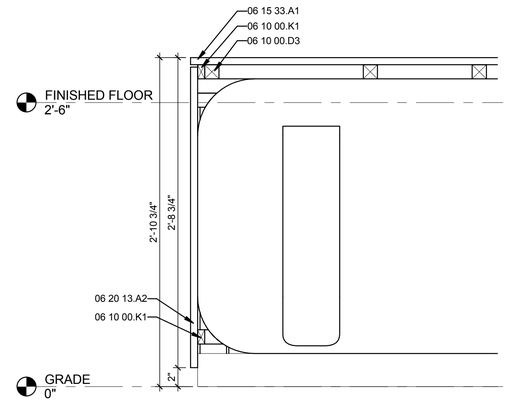


## C4 SHADE STRUCTURE SECTION

1 1/2" = 1'-0"

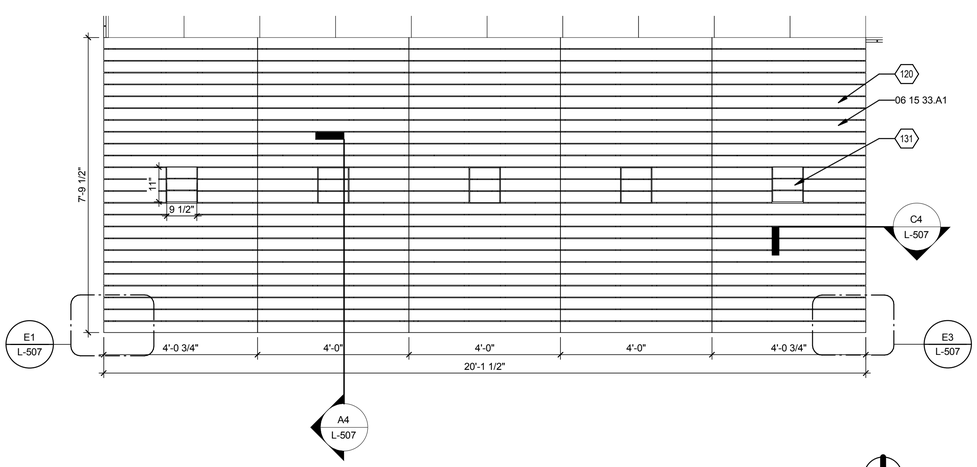


## A1 SHADE STRUCTURE PLAN

1/2" = 1'-0"

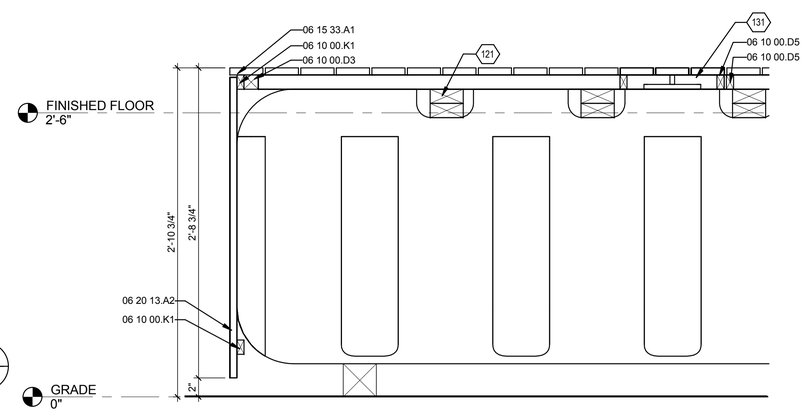


## A4 SHADE STRUCTURE SECTION

1 1/2" = 1'-0"

## GENERAL SHEET NOTES

## REFERENCE KEYNOTES

| | |
|---|---|
| 06 10 00.D3 | 2 X 2 FURRING |
| 06 10 00.D5 | 1 X 2 FURRING |
| 06 10 00.K1 | 1 X 2 FURRING ATTACHED TO SKIRT BOARD |
| 06 15 33.A1 | 1 X 4 WOOD DECKING |
| 06 20 13.A2 | 1 X 4 CYPRESS SKIRT BOARD |

## SHEET KEYNOTES

| | |
|---|---|
| 120 | WATER STORAGE TANK SHADE STRUCTURE, CONSTRUCT IN 4' MODULES. |
| 121 | (2) 2 X 4 FRAMING SET INTO GROOVES OF TANK. |
| 131 | FRAMED HINGED OPENING TO ACCESS TANK FILL POINT BELOW |

LIVING LIGHT


TEAM NAME: TENNESSEE

ADDRESS: UNIVERSITY OF TENNESSEE
1715 VOLUNTEER BLVD., RM 313
KNOXVILLE, TN 37996

CONTACT: LIVLIGHT@UTK.EDU
HTTP://LIVINGLIGHTUTK.COM

CONSULTANTS

JAMES ROSE ARCHITECT

MALLIA ENGINEERING

ROSS BRYAN ASSOCIATES

RICHARD KELSO

LEON TOLBERT


CLIENT

U.S. DEPARTMENT OF ENERGY

SOLAR DECATHLON 2011

WWW.SOLARDECATHLON.GOV

U.S. DEPARTMENT OF ENERGY SOLAR DECATHLON

| MARK | DATE | DESCRIPTION |
|---|---|---|

| | |
|---|---|
| LOT NUMBER: | 202 |
| DRAWN BY: | MEGAN CHAFIN |
| CHECKED BY: | JAMES ROSE |
| COPYRIGHT: | NONE: PROJECT IS PUBLIC DOMAIN |

SHEET TITLE

SHADE STRUCTURE DETAILS

L-507

8/13/2011 10:51:19 AM

| DECK HARDWARE SCHEDULE | | | |
|---|---|---|---|
| COMPANY | MODEL | NUMBER | REMARK |
| PIERAMID FOUNDATION SYSTEMS | 12" | 65 | |
| FABRICATED | TYP. CONNECTION PLATE | 65 | REF. D5/L-503 |
| FABRICATED | OFFSET CONNECTION PLATE | 2 | REF. A5/L-503 |
| FABRICATED | SHORT CONNECTION PLATE | 6 | REF. B5/L-503 |
| SIMPSON STRONG TIE | LUS210 | 94 | |
| SIMPSON STRONG TIE | CC0Q4 | 3 | |
| SIMPSON STRONG TIE | ML26Z | 84 | |
| SIMPSON STRONG TIE | LUS26 | 176 | |
| SIMPSON STRONG TIE | LUC26Z | 88 | |

LIVING LIGHT


TEAM NAME: TENNESSEE

ADDRESS: UNIVERSITY OF TENNESSEE
1715 VOLUNTEER BLVD., RM 313
KNOXVILLE, TN 37996

CONTACT: LIVLIGHT@UTK.EDU
HTTP://LIVINGLIGHTUTK.COM


CONSULTANTS

JAMES ROSE ARCHITECT
MALLIA ENGINEERING
ROSS BRYAN ASSOCIATES
RICHARD KELSO
LEON TOLBERT

CLIENT

U.S. DEPARTMENT OF ENERGY
SOLAR DECATHLON 2011
WWW.SOLARDECATHLON.GOV

U.S. DEPARTMENT OF ENERGY SOLAR DECATHLON

| MARK | DATE | DESCRIPTION |
|---|---|---|

LOT NUMBER: 202
DRAWN BY: JAMES DYER
CHECKED BY: MAURICE MALLIA

COPYRIGHT: NONE: PROJECT IS PUBLIC DOMAIN


SHEET TITLE

# DECK SCHEDULES

L-601

8/13/2011 10:51:20 AM

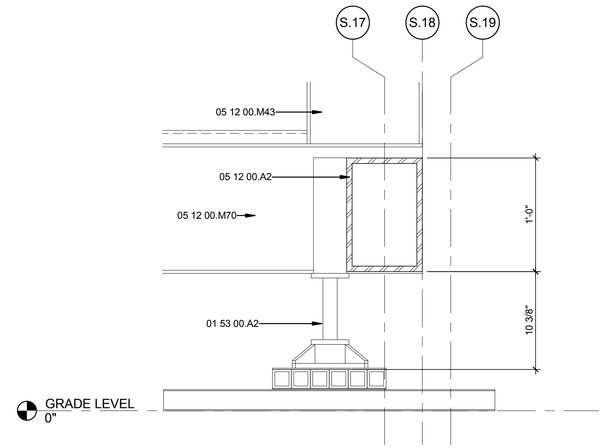


## D5 FOOTING SECTION DETAIL

1 1/2" = 1'-0"

0 1/2' 1' 1 1/2'

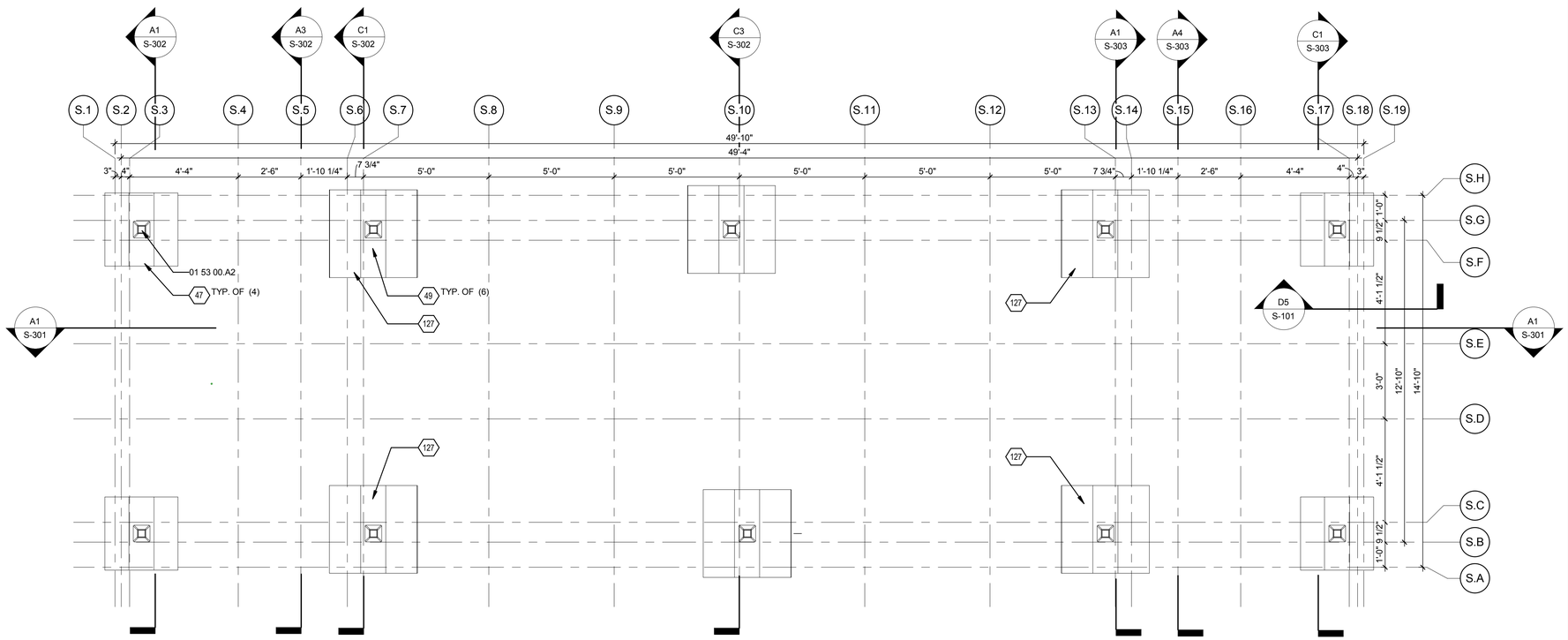


## A1 FOUNDATION PLAN

3/8" = 1'-0"

0 2' 4' 6'

# GENERAL SHEET NOTES

1. REFERENCE SHEET G-501 FOR SHIMMING METHODS TO ACCOMODATE GRADE CHANGE.

# REFERENCE KEYNOTES

| | |
|---|---|
| 01 53 00.A2 | ADJUSTABLE BUILDING FOOTING |
| 05 12 00.A2 | HSS12X8X5/8 BEAM |
| 05 12 00.M43 | W12X19 COLUMN |
| 05 12 00.M70 | W14X22 BEAM |

# SHEET KEYNOTES

| | |
|---|---|
| 47 | STEEL CRIBBING CONSISTING OF TWO CROSS STACKED LAYERS. THE BOTTOM LAYER CONTAINS (11) HSS 2" X 2" X 1/4" X 2'-11" SANDWICHED BETWEEN (2) 1/8" X 2'-11" X 2'-11" STEEL PLATES. THE TOP LAYER CONTAINS (6) HSS 2" X 2" X 1/4" X 3'-6" SANDWICHED BETWEEN (2) 1/8" X 12" X 3'-6" STEEL PLATES. |
| 49 | STEEL CRIBBING CONSISTING OF TWO CROSS STACKED LAYERS. THE BOTTOM LAYER CONTAINS (11) HSS 2" X 2" X 1/4" X 3'-6" SANDWICHED BETWEEN (2) 1/8" X 3'-6" X 3'-6" STEEL PLATES. THE TOP LAYER CONTAINS (6) HSS 2" X 2" X 1/4" X 3'-6" SANDWICHED BETWEEN (2) 1/8" X 12" X 3'-6" STEEL PLATES. |
| 127 | OFFSET CRIBBING FROM CENTER OF BUILDING FOOTING 2" TOWARDS UNDERSIDE OF BUILDING TO ALLOW ROOM FOR DECK FOOTING |

LIVING LIGHT


TEAM NAME: TENNESSEE

ADDRESS: UNIVERSITY OF TENNESSEE
1715 VOLUNTEER BLVD., RM 313
KNOXVILLE, TN 37996

CONTACT: LIVLIGHT@UTK.EDU
HTTP://LIVINGLIGHTUTK.COM

CONSULTANTS

JAMES ROSE ARCHITECT
MALLIA ENGINEERING
ROSS BRYAN ASSOCIATES
RICHARD KELSO
LEON TOLBERT


CLIENT

U.S. DEPARTMENT OF ENERGY
SOLAR DECATHLON 2011
WWW.SOLARDECATHLON.GOV

U.S. DEPARTMENT OF ENERGY SOLAR DECATHLON

| MARK | DATE | DESCRIPTION |
|---|---|---|

| | |
|---|---|
| LOT NUMBER: | 202 |
| DRAWN BY: | JAMES DYER |
| CHECKED BY: | MICHAEL PARIS |
| COPYRIGHT: | NONE: PROJECT IS PUBLIC DOMAIN |

SHEET TITLE

FOUNDATION PLAN

S-101

8/13/2011 10:54:54 AM

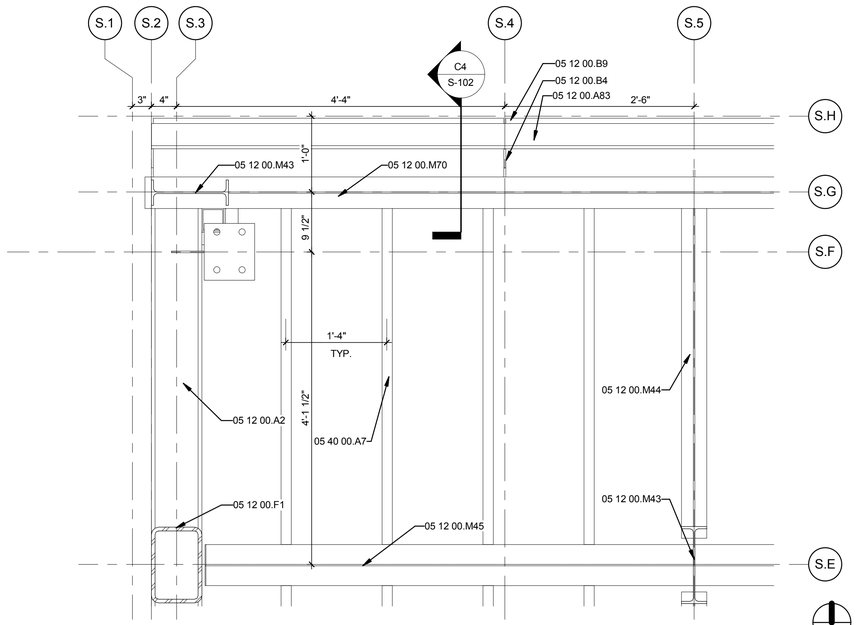


## C1 PLAN DETAIL

1" = 1'-0"

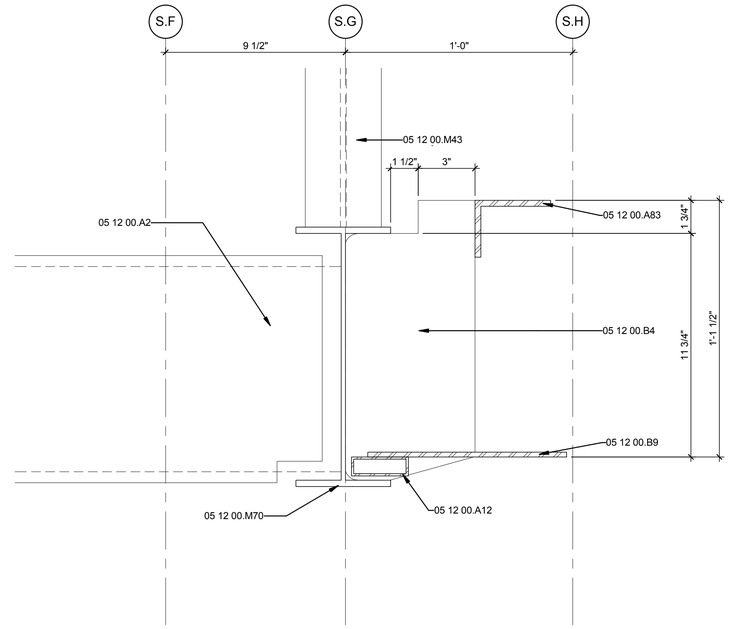


## C4 SECTION DETAIL

3" = 1'-0"

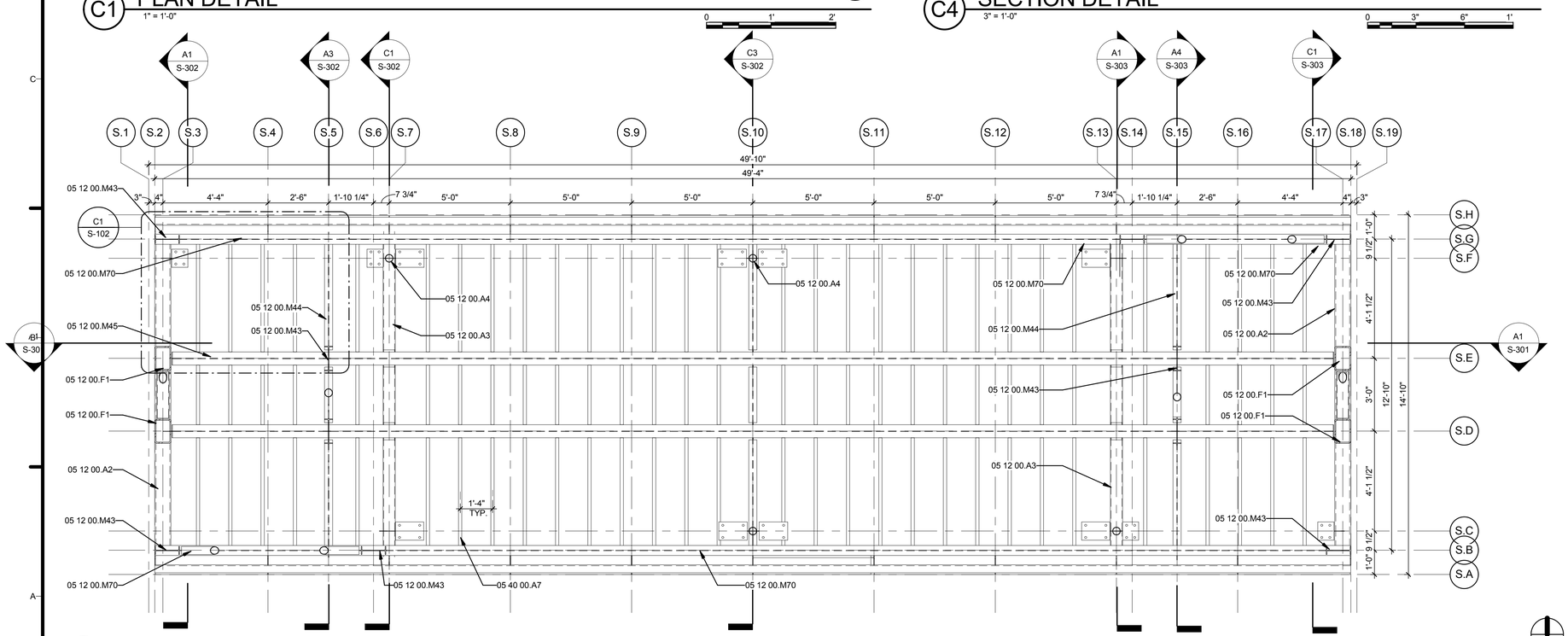


## A1 FLOOR FRAMING PLAN

3/8" = 1'-0"

## GENERAL SHEET NOTES

## REFERENCE KEYNOTES

| | |
|---|---|
| 05 12 00.A2 | HSS12X8X5/8 BEAM |
| 05 12 00.A3 | HSS12X6X5/16 BEAM |
| 05 12 00.A4 | HSS4X0.220 COLUMN |
| 05 12 00.A12 | HSS3X1X1/8 |
| 05 12 00.A83 | L4X3X0.3125 |
| 05 12 00.B4 | 5/16" WELDED STIFFENER PLATE |
| 05 12 00.B9 | PLATE 1/4" X 10-1/2" X CONT. |
| 05 12 00.F1 | HSS12X8X5/8 COLUMN |
| 05 12 00.M43 | W12X19 COLUMN |
| 05 12 00.M44 | W12X19 BEAM |
| 05 12 00.M45 | W12X26 BEAM |
| 05 12 00.M70 | W14X22 BEAM |
| 05 40 00.A7 | 12" "C" JOIST, 16" O.C. |

## SHEET KEYNOTES

LIVING LIGHT


TEAM NAME: TENNESSEE

ADDRESS: UNIVERSITY OF TENNESSEE
1715 VOLUNTEER BLVD., RM 313
KNOXVILLE, TN 37996

CONTACT: LIVLIGHT@UTK.EDU
HTTP://LIVINGLIGHTUTK.COM

CONSULTANTS

JAMES ROSE ARCHITECT

MALLIA ENGINEERING

ROSS BRYAN ASSOCIATES

RICHARD KELSO

LEON TOLBERT


CLIENT

U.S. DEPARTMENT OF ENERGY
SOLAR DECATHLON 2011
WWW.SOLARDECATHLON.GOV

U.S. DEPARTMENT OF ENERGY SOLAR DECATHLON

| MARK | DATE | DESCRIPTION |
|---|---|---|

| | |
|---|---|
| LOT NUMBER: | 202 |
| DRAWN BY: | JAMES DYER |
| CHECKED BY: | MICHAEL PARIS |
| COPYRIGHT: | NONE: PROJECT IS PUBLIC DOMAIN |

SHEET TITLE

FIRST FLOOR FRAMING PLAN

S-102

8/13/2011 10:54:58 AM

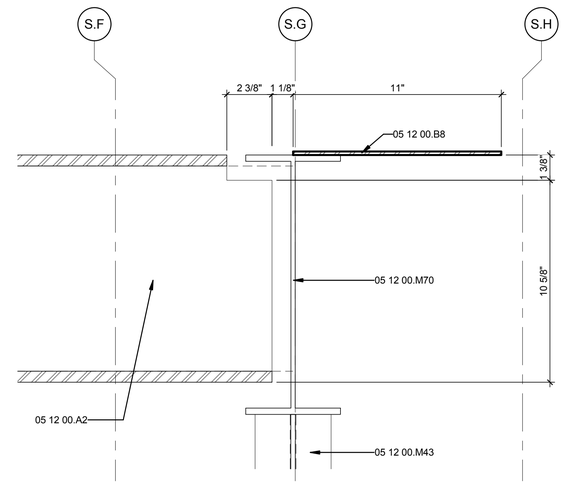


D4 SECTION DETAIL
3" = 1'-0"

0 3" 6" 1'

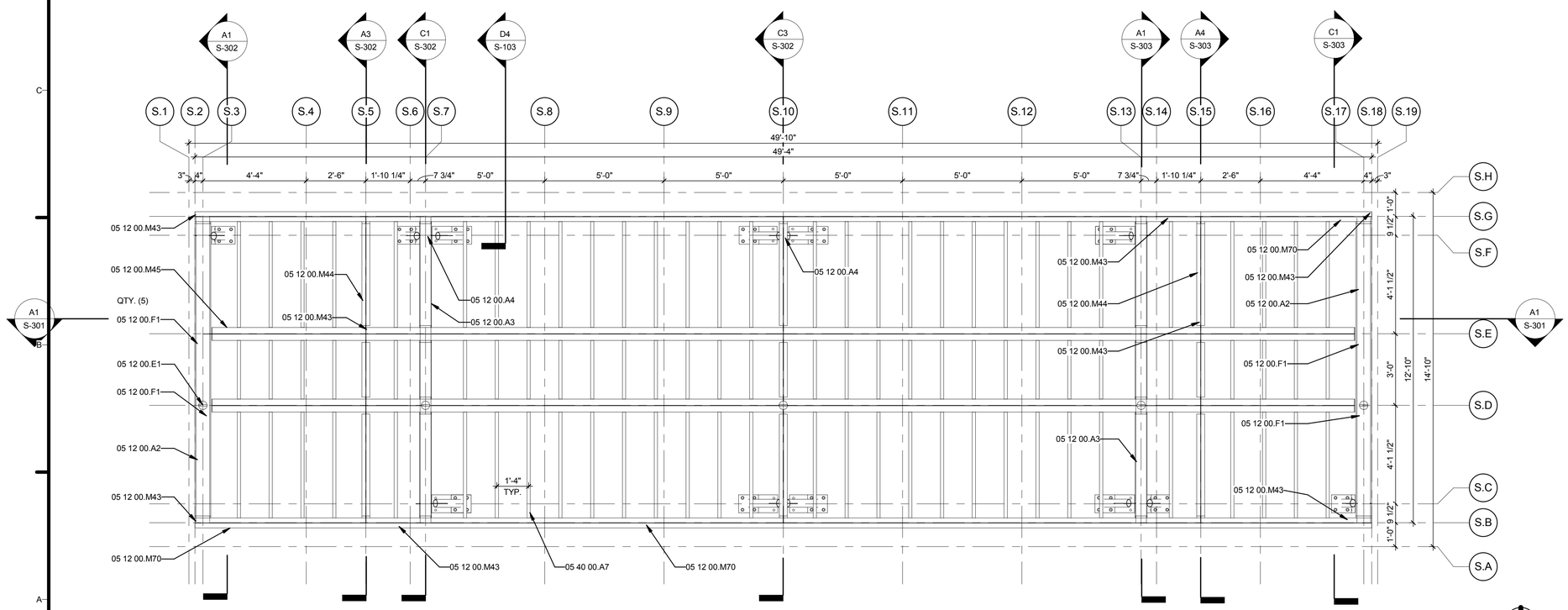


A1 ROOF FRAMING PLAN
3/8" = 1'-0"

0 2' 4' 6'

## GENERAL SHEET NOTES

## REFERENCE KEYNOTES

| | |
|---|---|
| 05 12 00.A2 | HSS12X8X5/8 BEAM |
| 05 12 00.A3 | HSS12X6X5/16 BEAM |
| 05 12 00.A4 | HSS4X0.220 COLUMN |
| 05 12 00.B8 | PLATE 1/4" X 11" X CONT. |
| 05 12 00.E1 | ROOF ANCHOR WELDED TO STEEL BEAM BELOW. REFERENCE C1/S-301 FOR DETAIL. |
| 05 12 00.F1 | HSS12X8X5/8 COLUMN |
| 05 12 00.M43 | W12X19 COLUMN |
| 05 12 00.M44 | W12X19 BEAM |
| 05 12 00.M45 | W12X26 BEAM |
| 05 12 00.M70 | W14X22 BEAM |
| 05 40 00.A7 | 12" "C" JOIST, 16" O.C. |

## SHEET KEYNOTES

LIVING LIGHT


TEAM NAME: TENNESSEE

ADDRESS: UNIVERSITY OF TENNESSEE
1715 VOLUNTEER BLVD., RM 313
KNOXVILLE, TN 37996

CONTACT: LIVLIGHT@UTK.EDU
HTTP://LIVINGLIGHTUTK.COM

CONSULTANTS

JAMES ROSE ARCHITECT

MALLIA ENGINEERING

ROSS BRYAN ASSOCIATES

RICHARD KELSO

LEON TOLBERT


CLIENT

U.S. DEPARTMENT OF ENERGY

SOLAR DECATHLON 2011

WWW.SOLARDECATHLON.GOV

U.S. DEPARTMENT OF ENERGY SOLAR DECATHLON

| MARK | DATE | DESCRIPTION |
|---|---|---|

| | |
|---|---|
| LOT NUMBER: | 202 |
| DRAWN BY: | JAMES DYER |
| CHECKED BY: | MICHAEL PARIS |
| COPYRIGHT: | NONE: PROJECT IS PUBLIC DOMAIN |

SHEET TITLE

ROOF FRAMING PLAN

S-103

8/13/2011 10:55:01 AM

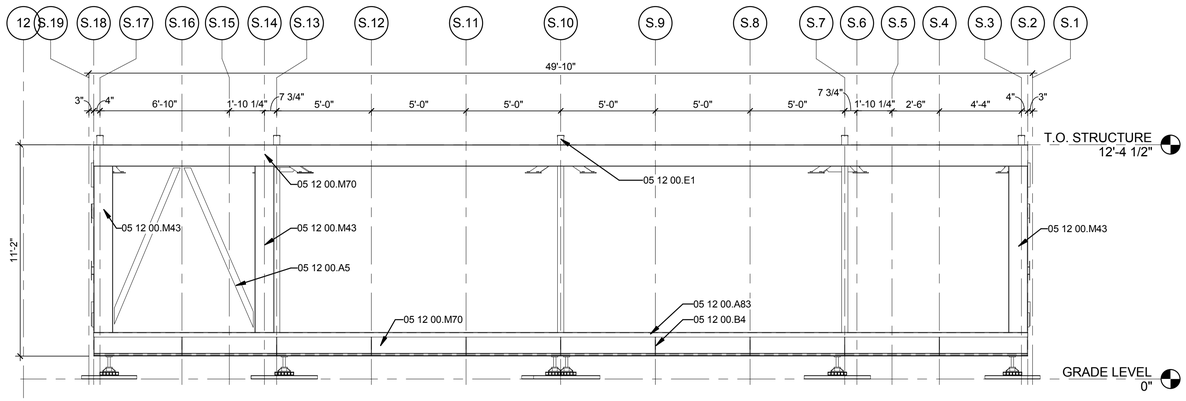


D1 NORTH STRUCTURAL ELEVATION
1/4" = 1'-0"

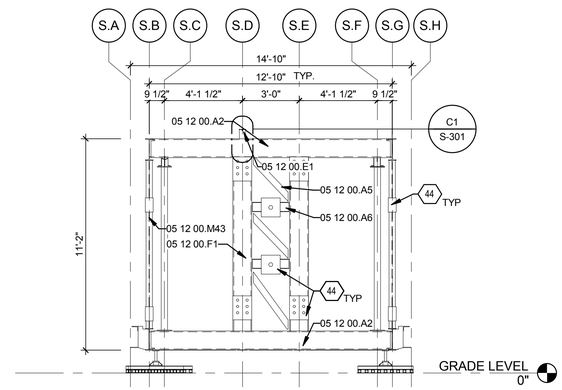


D5 EAST STRUCTURAL ELEVATION
1/4" = 1'-0"

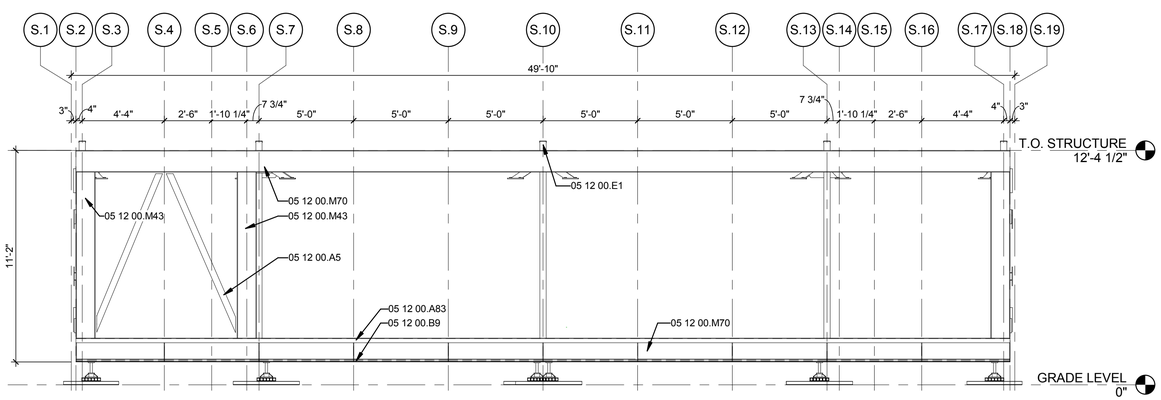


A1 SOUTH STRUCTURAL ELEVATION
1/4" = 1'-0"

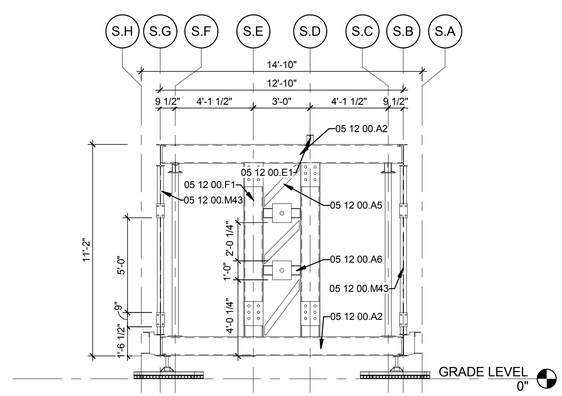


A5 WEST STRUCTURAL ELEVATION
1/4" = 1'-0"

## GENERAL SHEET NOTES

## REFERENCE KEYNOTES

| | |
|---|---|
| 05 12 00.A2 | HSS12X8X5/8 BEAM |
| 05 12 00.A5 | HSS4X0.220 CROSS BRACING |
| 05 12 00.A6 | HSS6X6X1/4 BRACING |
| 05 12 00.A83 | L4X3X0.3125 |
| 05 12 00.B4 | 5/16" WELDED STIFFENER PLATE |
| 05 12 00.B5 | PLATE 7"X49'-4"X1/4" |
| 05 12 00.B9 | PLATE 1/4" X 10-1/2" X CONT. |
| 05 12 00.E1 | ROOF ANCHOR WELDED TO STEEL BEAM BELOW. REFERENCE C1/S-301 FOR DETAIL. |
| 05 12 00.F1 | HSS12X8X5/8 COLUMN |
| 05 12 00.M43 | W12X19 COLUMN |
| 05 12 00.M70 | W14X22 BEAM |

## SHEET KEYNOTES

| | |
|---|---|
| 44 | STEEL PLATE FOR TRAILER CONNECTION ASSEMBLY |

LIVING LIGHT


TEAM NAME: TENNESSEE
ADDRESS: UNIVERSITY OF TENNESSEE
1715 VOLUNTEER BLVD., RM 313
KNOXVILLE, TN 37996
CONTACT: LIVLIGHT@UTK.EDU
HTTP://LIVINGLIGHTUTK.COM

CONSULTANTS
JAMES ROSE ARCHITECT
MALLIA ENGINEERING
ROSS BRYAN ASSOCIATES
RICHARD KELSO
LEON TOLBERT


CLIENT
U.S. DEPARTMENT OF ENERGY
SOLAR DECATHLON 2011
WWW.SOLARDECATHLON.GOV

U.S. DEPARTMENT OF ENERGY SOLAR DECATHLON

| MARK | DATE | DESCRIPTION |
|---|---|---|

| | |
|---|---|
| LOT NUMBER: | 202 |
| DRAWN BY: | KEVIN CHAMBERLIN |
| CHECKED BY: | MICHAEL PARIS |
| COPYRIGHT: | NONE: PROJECT IS PUBLIC DOMAIN |

SHEET TITLE
STRUCTURAL ELEVATIONS

S-201

8/13/2011 10:55:06 AM

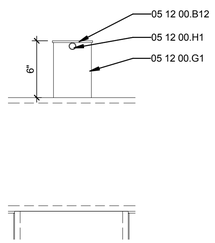


C1 ROOF ANCHOR DETAIL
1 1/2" = 1'-0"

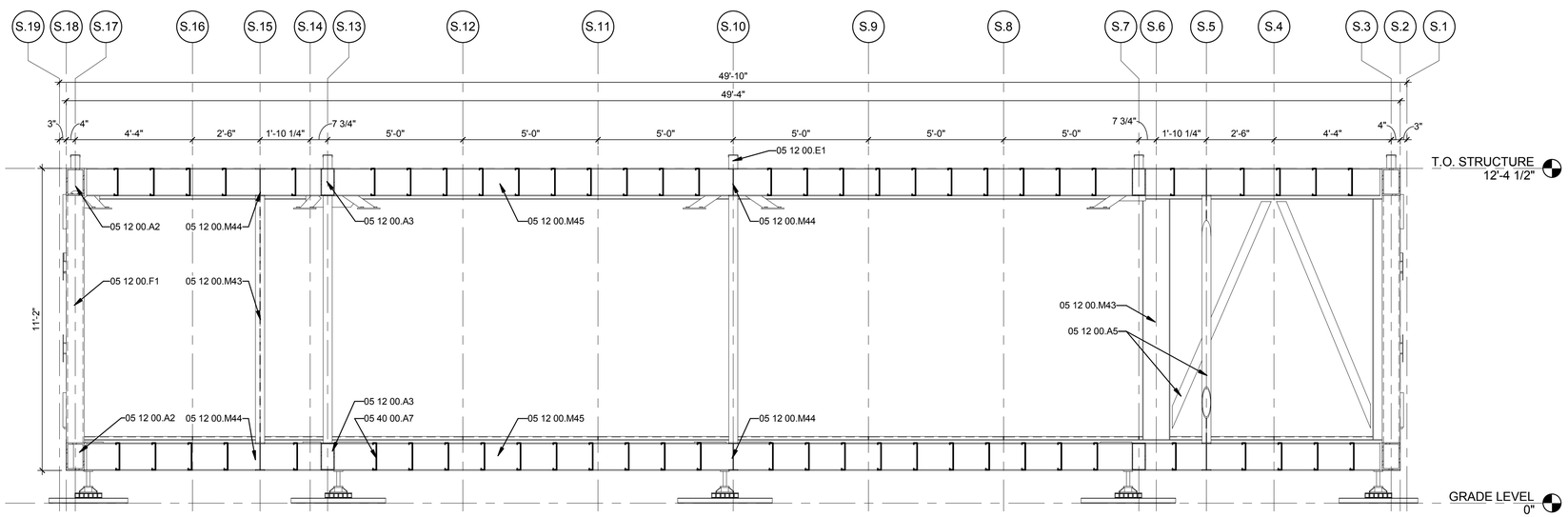


A1 STRUCTURAL LONGITUDINAL SECTION
3/8" = 1'-0"

0 2' 4' 6'

## GENERAL SHEET NOTES

## REFERENCE KEYNOTES

| | |
|---|---|
| 05 12 00.A2 | HSS12X8X5/8 BEAM |
| 05 12 00.A3 | HSS12X6X5/16 BEAM |
| 05 12 00.A5 | HSS4X0.220 CROSS BRACING |
| 05 12 00.B12 | ROUND CAP, PLATE 3/16" |
| 05 12 00.E1 | ROOF ANCHOR WELDED TO STEEL BEAM BELOW. REFERENCE C1/S-301 FOR DETAIL. |
| 05 12 00.F1 | HSS12X8X5/8 COLUMN |
| 05 12 00.G1 | HSS4X0.188 |
| 05 12 00.H1 | 3/4" STD PIPE |
| 05 12 00.M43 | W12X19 COLUMN |
| 05 12 00.M44 | W12X19 BEAM |
| 05 12 00.M45 | W12X26 BEAM |
| 05 40 00.A7 | 12" "C" JOIST, 16" O.C. |

## SHEET KEYNOTES

LIVING LIGHT


TEAM NAME: TENNESSEE

ADDRESS: UNIVERSITY OF TENNESSEE
1715 VOLUNTEER BLVD., RM 313
KNOXVILLE, TN 37996

CONTACT: LIVLIGHT@UTK.EDU
HTTP://LIVINGLIGHTUTK.COM


CONSULTANTS

JAMES ROSE ARCHITECT

MALLIA ENGINEERING

ROSS BRYAN ASSOCIATES

RICHARD KELSO

LEON TOLBERT

CLIENT

U.S. DEPARTMENT OF ENERGY

SOLAR DECATHLON 2011

WWW.SOLARDECATHLON.GOV

U.S. DEPARTMENT OF ENERGY SOLAR DECATHLON

| MARK | DATE | DESCRIPTION |
|---|---|---|

| | |
|---|---|
| LOT NUMBER: | 202 |
| DRAWN BY: | KEVIN CHAMBERLIN |
| CHECKED BY: | MICHAEL PARIS |
| COPYRIGHT: | NONE: PROJECT IS PUBLIC DOMAIN |

SHEET TITLE

STRUCTURAL SECTIONS

S-301

8/13/2011 10:55:09 AM

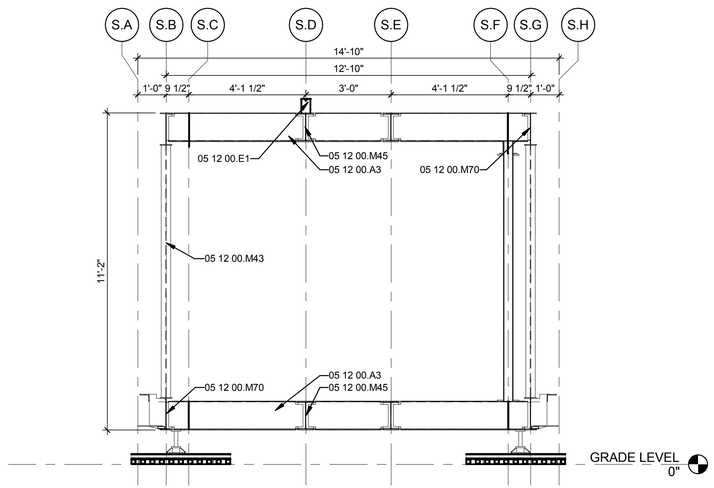


C1 STRUCTURAL TRANSVERSE SECTION AT GRID LINE S.12
3/8" = 1'-0"
0 2' 4' 6'

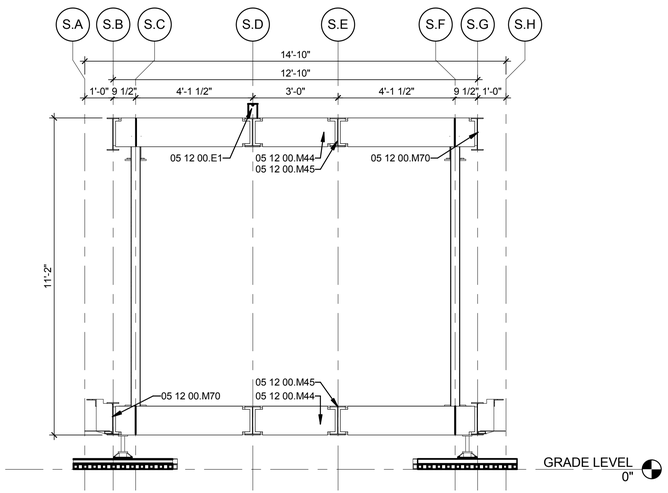


C3 STRUCTURAL TRANSVERSE SECTION AT GRID LINE S.9
3/8" = 1'-0"
0 2' 4' 6'

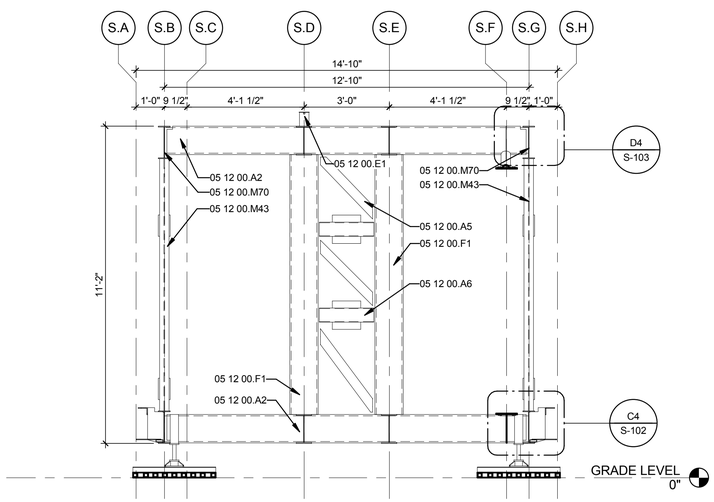


A1 STRUCTURAL TRANSVERSE SECTION AT GRID LINE S.16
3/8" = 1'-0"
0 2' 4' 6'

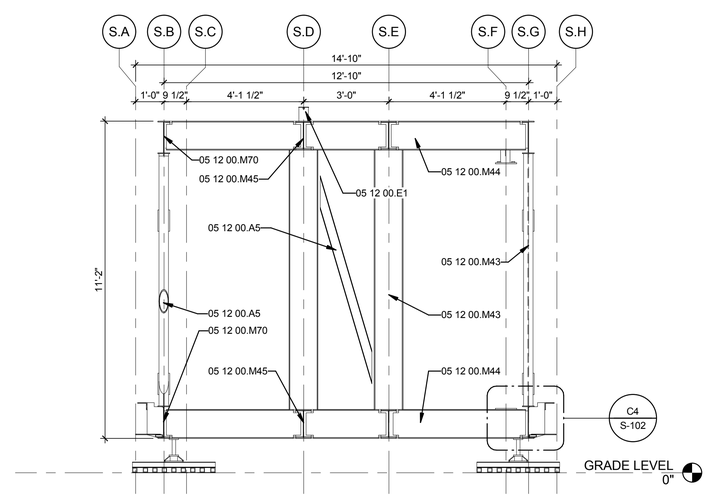


A3 STRUCTURAL TRANSVERSE SECTION AT GRID LINE S.15
3/8" = 1'-0"
0 2' 4' 6'

## GENERAL SHEET NOTES

## REFERENCE KEYNOTES

| | |
|---|---|
| 05 12 00.A2 | HSS12X8X5/8 BEAM |
| 05 12 00.A3 | HSS12X6X5/16 BEAM |
| 05 12 00.A5 | HSS4X0.220 CROSS BRACING |
| 05 12 00.A6 | HSS6X6X1/4 BRACING |
| 05 12 00.E1 | ROOF ANCHOR WELDED TO STEEL BEAM BELOW. REFERENCE C1/S-301 FOR DETAIL. |
| 05 12 00.F1 | HSS12X8X5/8 COLUMN |
| 05 12 00.M43 | W12X19 COLUMN |
| 05 12 00.M44 | W12X19 BEAM |
| 05 12 00.M45 | W12X26 BEAM |
| 05 12 00.M70 | W14X22 BEAM |

## SHEET KEYNOTES

LIVING LIGHT


TEAM NAME: TENNESSEE
ADDRESS: UNIVERSITY OF TENNESSEE
1715 VOLUNTEER BLVD., RM 313
KNOXVILLE, TN 37996
CONTACT: LIVLIGHT@UTK.EDU
HTTP://LIVINGLIGHTUTK.COM


CONSULTANTS

JAMES ROSE ARCHITECT
MALLIA ENGINEERING
ROSS BRYAN ASSOCIATES
RICHARD KELSO
LEON TOLBERT

CLIENT

U.S. DEPARTMENT OF ENERGY
SOLAR DECATHLON 2011
WWW.SOLARDECATHLON.GOV

U.S. DEPARTMENT OF ENERGY SOLAR DECATHLON

| MARK | DATE | DESCRIPTION |
|---|---|---|

| | |
|---|---|
| LOT NUMBER: | 202 |
| DRAWN BY: | KRISTA GRAVES |
| CHECKED BY: | MICHAEL PARIS |
| COPYRIGHT: | NONE: PROJECT IS PUBLIC DOMAIN |

SHEET TITLE

STRUCTURAL TRANSVERSE SECTIONS

S-302

8/13/2011 10:55:13 AM

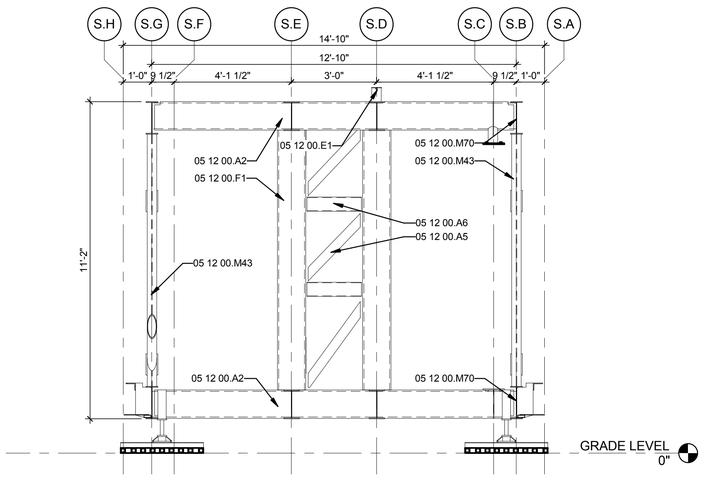


C1 STRUCTURAL TRANSVERSE SECTION AT GRID LINE S.2

3/8" = 1'-0"

0 2' 4' 6'

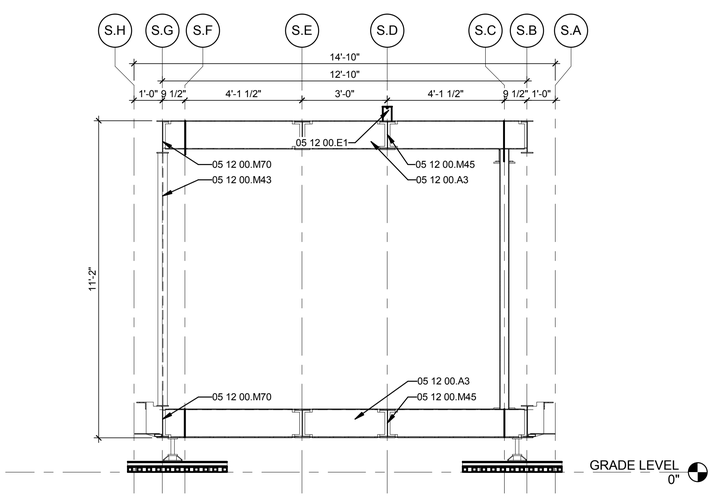


A1 STRUCTURAL TRANSVERSE SECTION AT GRID LINE S.6

3/8" = 1'-0"

0 2' 4' 6'

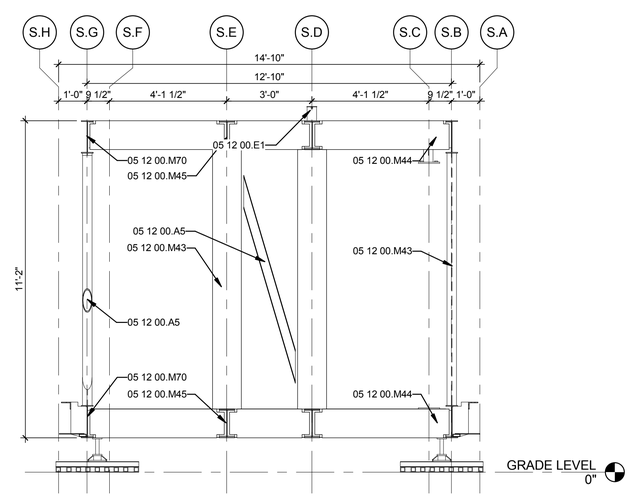


A4 STRUCTURAL TRANSVERSE SECTION AT GRID LINE S.4

3/8" = 1'-0"

0 2' 4' 6'

## GENERAL SHEET NOTES

## REFERENCE KEYNOTES

| | |
|---|---|
| 05 12 00.A2 | HSS12X8X5/8 BEAM |
| 05 12 00.A3 | HSS12X6X5/16 BEAM |
| 05 12 00.A5 | HSS4X0.220 CROSS BRACING |
| 05 12 00.A6 | HSS6X6X1/4 BRACING |
| 05 12 00.E1 | ROOF ANCHOR WELDED TO STEEL BEAM BELOW. REFERENCE C1/S-301 FOR DETAIL. |
| 05 12 00.F1 | HSS12X8X5/8 COLUMN |
| 05 12 00.M43 | W12X19 COLUMN |
| 05 12 00.M44 | W12X19 BEAM |
| 05 12 00.M45 | W12X26 BEAM |
| 05 12 00.M70 | W14X22 BEAM |

## SHEET KEYNOTES

LIVING LIGHT


TEAM NAME: TENNESSEE

ADDRESS: UNIVERSITY OF TENNESSEE
1715 VOLUNTEER BLVD., RM 313
KNOXVILLE, TN 37996

CONTACT: LIVLIGHT@UTK.EDU
HTTP://LIVINGLIGHTUTK.COM

CONSULTANTS

JAMES ROSE ARCHITECT

MALLIA ENGINEERING

ROSS BRYAN ASSOCIATES

RICHARD KELSO

LEON TOLBERT


CLIENT

U.S. DEPARTMENT OF ENERGY

SOLAR DECATHLON 2011

WWW.SOLARDECATHLON.GOV

U.S. DEPARTMENT OF ENERGY SOLAR DECATHLON

| MARK | DATE | DESCRIPTION |
|---|---|---|

| | |
|---|---|
| LOT NUMBER: | 202 |
| DRAWN BY: | KRISTA GRAVES |
| CHECKED BY: | MICHAEL PARIS |
| COPYRIGHT: | NONE: PROJECT IS PUBLIC DOMAIN |

SHEET TITLE

STRUCTURAL TRANSVERSE SECTIONS

S-303

8/13/2011 10:55:17 AM

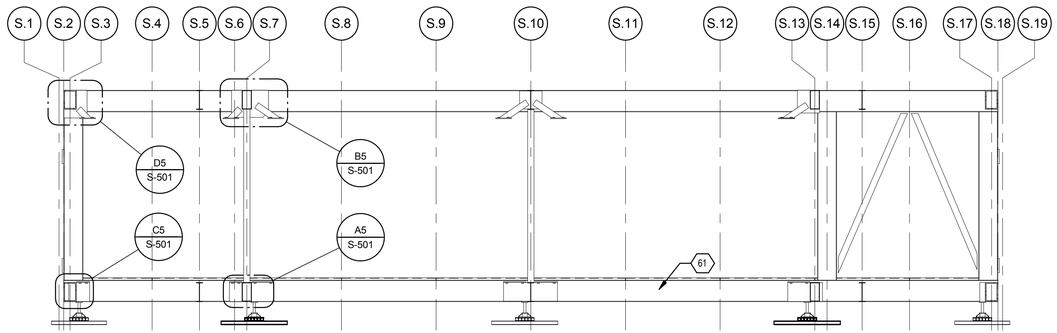


C1 STRUCTURE CONNECTIONS - GRID LINE S.G

1/4" = 1'-0"

0 2' 4' 8'

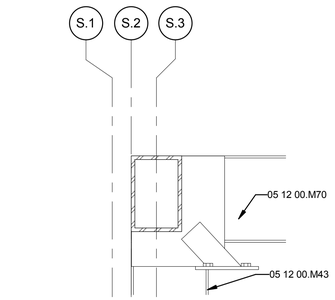


D5 TOP CONNECTION - GRID LINE S.2

1" = 1'-0"

0 1' 2'

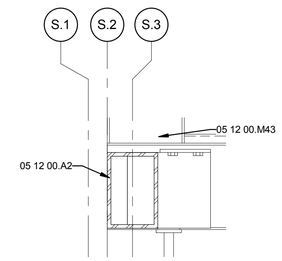


C5 BOTTOM CONNECTION - GRID LINE S.2

1" = 1'-0"

0 1' 2'

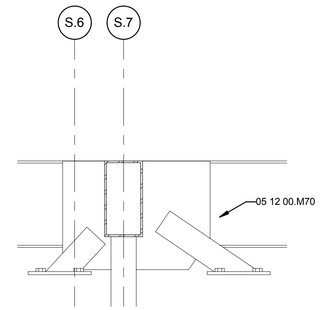


B5 TOP CONNECTION - GRID LINE S.6

1" = 1'-0"

0 1' 2'

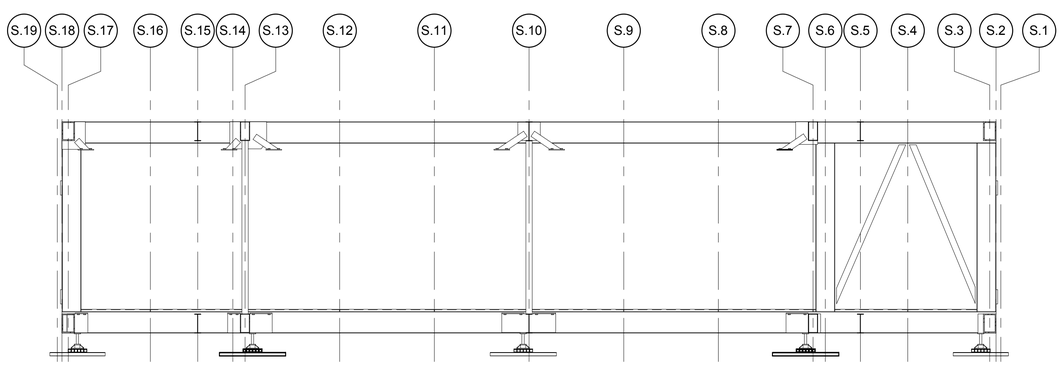


A1 STRUCTURE CONNECTIONS - GRID LINE S.D

1/4" = 1'-0"

0 2' 4' 8'

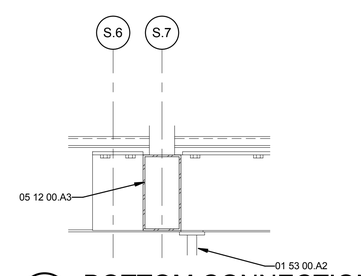


A5 BOTTOM CONNECTION - GRID LINE S.6

1" = 1'-0"

0 1' 2'

## GENERAL SHEET NOTES

## REFERENCE KEYNOTES

| | |
|---|---|
| 01 53 00.A2 | ADJUSTABLE BUILDING FOOTING |
| 05 12 00.A2 | HSS12X8X5/8 BEAM |
| 05 12 00.A3 | HSS12X6X5/16 BEAM |
| 05 12 00.M43 | W12X19 COLUMN |
| 05 12 00.M70 | W14X22 BEAM |

## SHEET KEYNOTES

| | |
|---|---|
| 61 | METAL JOISTS OMITED FOR CLARITY |

LIVING LIGHT

| | |
|---|---|
| TEAM NAME: | TENNESSEE |
| ADDRESS: | UNIVERSITY OF TENNESSEE<br>1715 VOLUNTEER BLVD., RM 313<br>KNOXVILLE, TN 37996 |
| CONTACT: | LIVLIGHT@UTK.EDU<br>HTTP://LIVINGLIGHTUTK.COM |

CONSULTANTS

JAMES ROSE ARCHITECT

MALLIA ENGINEERING

ROSS BRYAN ASSOCIATES

RICHARD KELSO

LEON TOLBERT

CLIENT

U.S. DEPARTMENT OF ENERGY

SOLAR DECATHLON 2011

WWW.SOLARDECATHLON.GOV

U.S. DEPARTMENT OF ENERGY SOLAR DECATHLON

| MARK | DATE | DESCRIPTION |
|---|---|---|

| | |
|---|---|
| LOT NUMBER: | 202 |
| DRAWN BY: | NELEA WALLING |
| CHECKED BY: | MICHAEL PARIS |
| COPYRIGHT: | NONE: PROJECT IS PUBLIC DOMAIN |

SHEET TITLE

STRUCTURE CONNECTIONS

S-501

8/13/2011 10:55:20 AM

| STRUCTURAL COLUMN SCHEDULE | | |
|---|---|---|
| Type | Length | Count |
| HSS4X0.220 | | 4 |
| HSS12X8X5/8 | | 4 |
| L2X2X1/8 | 9'-10" | 2 |
| W12X19 | | 10 |

| STRUCTURAL FRAMING SCHEDULE | | |
|---|---|---|
| Type | Length | Count |
| HSS4X0.220 | 4'-2 7/8" | 1 |
| HSS4X0.220 | 4'-3 7/8" | 1 |
| HSS4X0.220 | 4'-4" | 1 |
| HSS4X0.220 | 4'-4 1/2" | 1 |
| HSS4X0.220 | 5'-0 3/8" | 1 |
| HSS4X0.220 | 5'-1 1/4" | 1 |
| HSS4X0.220 | 10'-7" | 1 |
| HSS4X0.220 | 10'-7" | 1 |
| HSS4X0.220 | 10'-10 1/4" | 1 |
| HSS4X0.220 | 10'-10 1/2" | 1 |
| HSS4X0.220 | 10'-11 1/8" | 1 |
| HSS4X0.220 | 10'-11 1/4" | 1 |
| HSS6X6X1/4 | 3'-0" | 4 |
| HSS12X6X5/16 | 3'-0" | 4 |
| HSS12X6X5/16 | 4'-11" | 2 |
| HSS12X6X5/16 | 4'-11" | 4 |
| HSS12X6X5/16 | 4'-11" | 2 |
| HSS12X8X5/8 | 12'-10" | 4 |
| W12X19 | 3'-0" | 6 |
| W12X19 | 4'-11" | 3 |
| W12X19 | 4'-11" | 6 |
| W12X19 | 4'-11" | 3 |
| W12X26 | 48'-8" | 4 |
| W14X22 | 48'-8" | 4 |

LIVING LIGHT


TEAM NAME: TENNESSEE

ADDRESS: UNIVERSITY OF TENNESSEE
1715 VOLUNTEER BLVD., RM 313
KNOXVILLE, TN 37996

CONTACT: LIVLIGHT@UTK.EDU
HTTP://LIVINGLIGHTUTK.COM


CONSULTANTS

JAMES ROSE ARCHITECT
MALLIA ENGINEERING
ROSS BRYAN ASSOCIATES
RICHARD KELSO
LEON TOLBERT

CLIENT

U.S. DEPARTMENT OF ENERGY
SOLAR DECATHLON 2011
WWW.SOLARDECATHLON.GOV

U.S. DEPARTMENT OF ENERGY SOLAR DECATHLON

| MARK | DATE | DESCRIPTION |
|---|---|---|

LOT NUMBER: 202
DRAWN BY: KEVIN CHAMBERLIN
CHECKED BY: MICHAEL PARIS


COPYRIGHT: NONE: PROJECT IS PUBLIC DOMAIN


SHEET TITLE

# STRUCTURAL STEEL SCHEDULE

# S-601

8/13/2011 10:55:22 AM

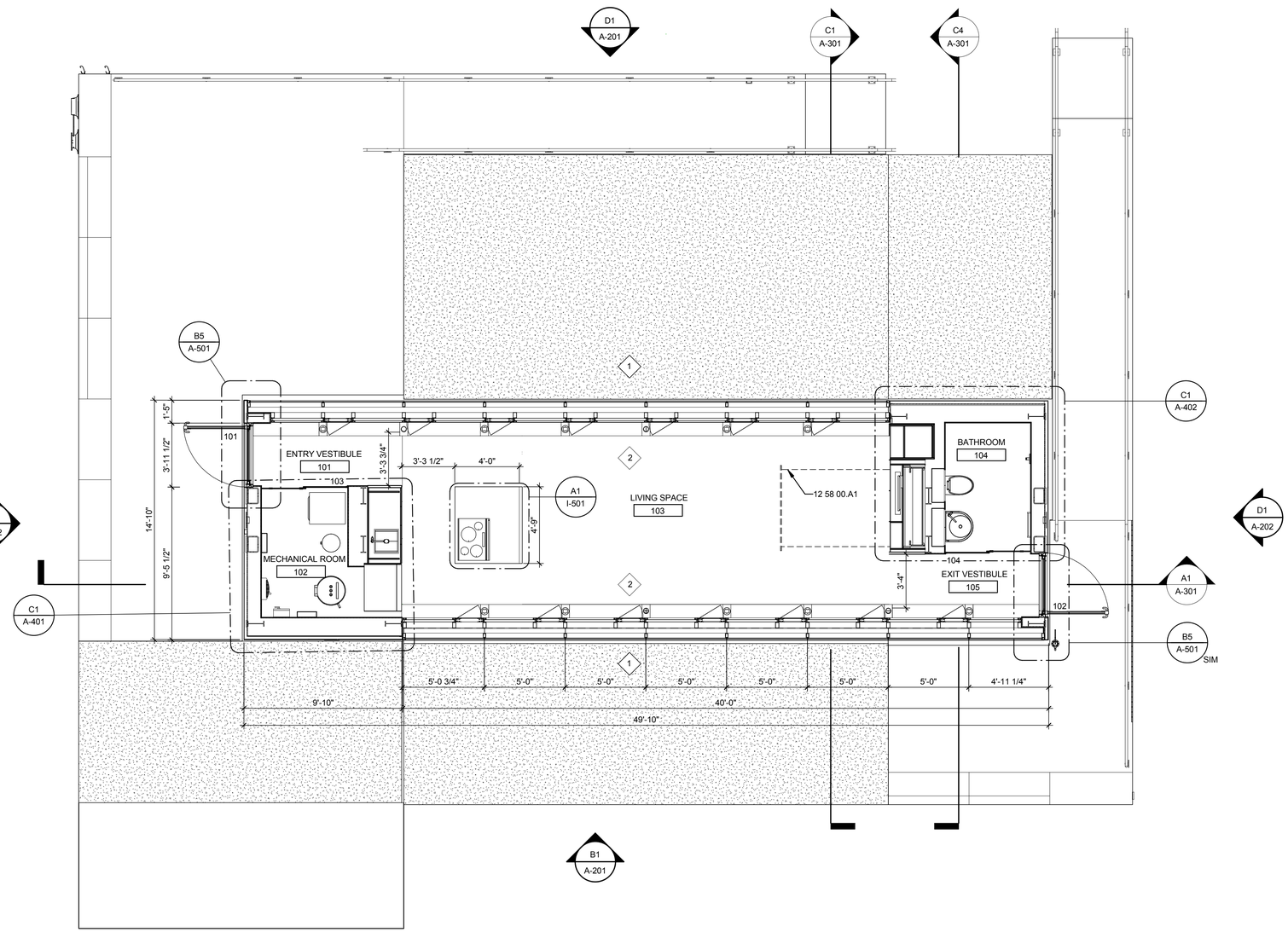


A1 FLOOR PLAN
1/4" = 1'-0"

0 2' 4' 8'

8/13/2011 10:42:55 AM

## GENERAL SHEET NOTES

## REFERENCE KEYNOTES

| | |
|---|---|
| 12 58 00.A1 | MURPHY BED |

## SHEET KEYNOTES

LIVING LIGHT

| | |
|---|---|
| TEAM NAME: | TENNESSEE |
| ADDRESS: | UNIVERSITY OF TENNESSEE<br>1715 VOLUNTEER BLVD., RM 313<br>KNOXVILLE, TN 37996 |
| CONTACT: | LIVLIGHT@UTK.EDU<br>HTTP://LIVINGLIGHTUTK.COM |

CONSULTANTS

- JAMES ROSE ARCHITECT
- MALLIA ENGINEERING
- ROSS BRYAN ASSOCIATES
- RICHARD KELSO
- LEON TOLBERT

CLIENT

U.S. DEPARTMENT OF ENERGY
SOLAR DECATHLON 2011
WWW.SOLARDECATHLON.GOV

U.S. DEPARTMENT OF ENERGY SOLAR DECATHLON

| MARK | DATE | DESCRIPTION |
|---|---|---|

| | |
|---|---|
| LOT NUMBER: | 202 |
| DRAWN BY: | DREW PARRY |
| CHECKED BY: | JAMES ROSE |
| COPYRIGHT: | NONE: PROJECT IS PUBLIC DOMAIN |

SHEET TITLE

FIRST FLOOR PLAN

A-101

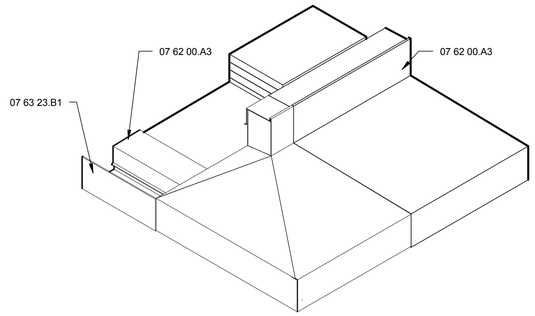


## D1 ROOF CAP CORNER DETAIL (FRONT VIEW)

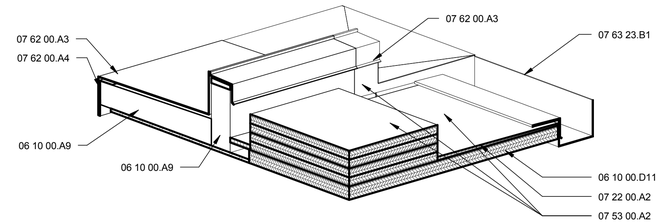


## D3 ROOF CAP CORNER DETAIL (BACK VIEW)

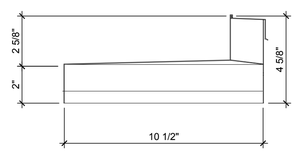


## C1 CORNER CAP ELEVATION

3" = 1'-0"

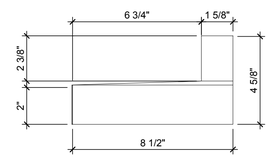


## C3 CORNER CAP ELEVATION

3" = 1'-0"

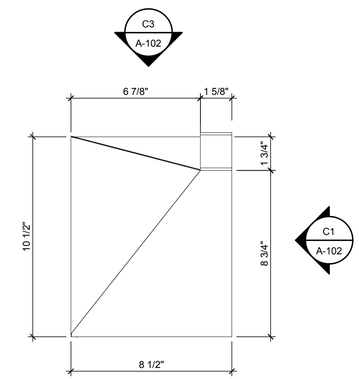


## C5 ROOF CORNER CAP DETAIL TYP.

3" = 1'-0"

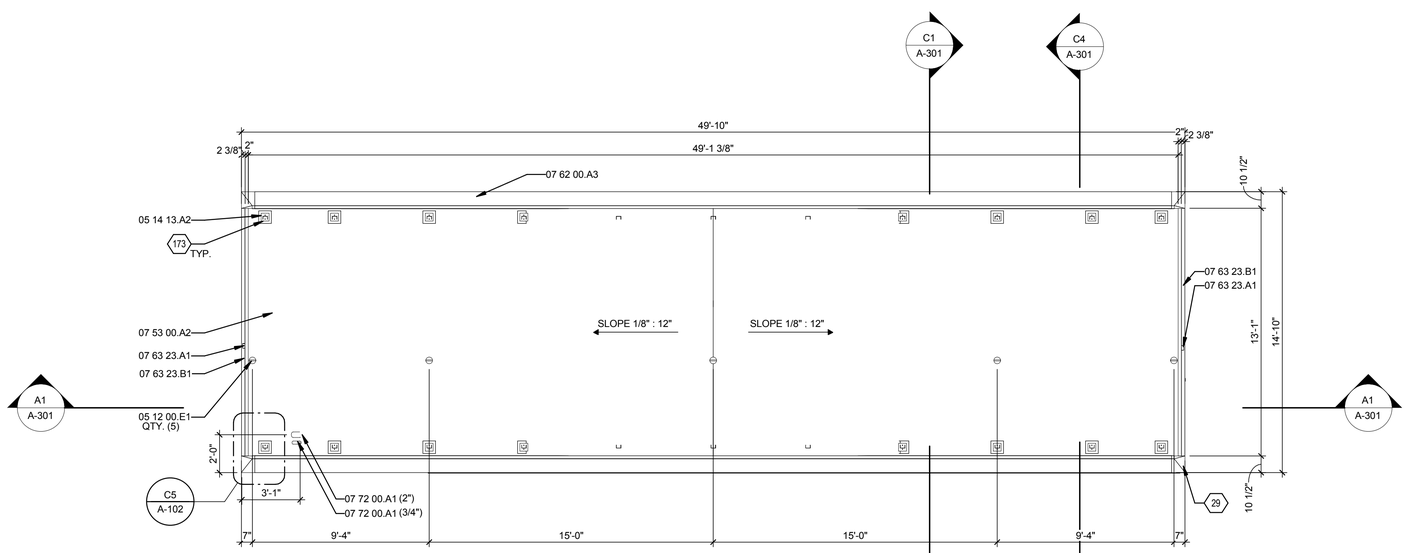


## A1 ROOF PLAN

1/4" = 1'-0"

## GENERAL SHEET NOTES

1. PV RACK OMITTED FOR CLARITY

## REFERENCE KEYNOTES

| | |
|---|---|
| 05 12 00.E1 | ROOF ANCHOR WELDED TO STEEL BEAM BELOW. REFERENCE C1/S-301 FOR DETAIL. |
| 05 14 13.A2 | FOOTING BASE PLATE |
| 07 53 00.A2 | EPDM ROOFING |
| 07 62 00.A3 | ALUMINUM FLASHING, 20 GA. |
| 07 63 23.A1 | CUSTOM 1 3/4" X 3" ALUMINUM DOWNSPOUT |
| 07 63 23.B1 | ALUMINUM GUTTER |
| 07 72 00.A1 | ELECTRICAL WEATHERHEAD |
| 06 10 00.A9 | PRESSURE TREATED BLOCKING |
| 06 10 00.D11 | 3/4" PLYWOOD |
| 06 10 00.J1 | BLOCKING |
| 07 22 00.A2 | TAPERED RIGID INSULATION |
| 07 62 00.A4 | ALUMINUM COUNTER FLASHING, 20 GA |

## SHEET KEYNOTES

| | |
|---|---|
| 29 | REFERENCE D1/A-102 & D3/A-102 FOR ROOF CAP CORNER DETAIL |
| 173 | ROOF MEMBRANE TO WRAP OVER ROOF RACK FOOTING AND UP VERTICAL ARM. SLOPE MEMBRANE AWAY FROM FOOTING ON ALL SIDES. |

LIVING LIGHT


TEAM NAME: TENNESSEE

ADDRESS: UNIVERSITY OF TENNESSEE
1715 VOLUNTEER BLVD., RM 313
KNOXVILLE, TN 37996

CONTACT: LIVLIGHT@UTK.EDU
HTTP://LIVINGLIGHTUTK.COM

CONSULTANTS

JAMES ROSE ARCHITECT
MALLIA ENGINEERING
ROSS BRYAN ASSOCIATES
RICHARD KELSO
LEON TOLBERT


CLIENT

U.S. DEPARTMENT OF ENERGY
SOLAR DECATHLON 2011
WWW.SOLARDECATHLON.GOV

U.S. DEPARTMENT OF ENERGY SOLAR DECATHLON

| MARK | DATE | DESCRIPTION |
|---|---|---|

| | |
|---|---|
| LOT NUMBER: | 202 |
| DRAWN BY: | JOHN HAND |
| CHECKED BY: | JAMES ROSE |
| COPYRIGHT: | NONE: PROJECT IS PUBLIC DOMAIN |

SHEET TITLE

ROOF PLAN

A-102

8/13/2011 10:43:00 AM

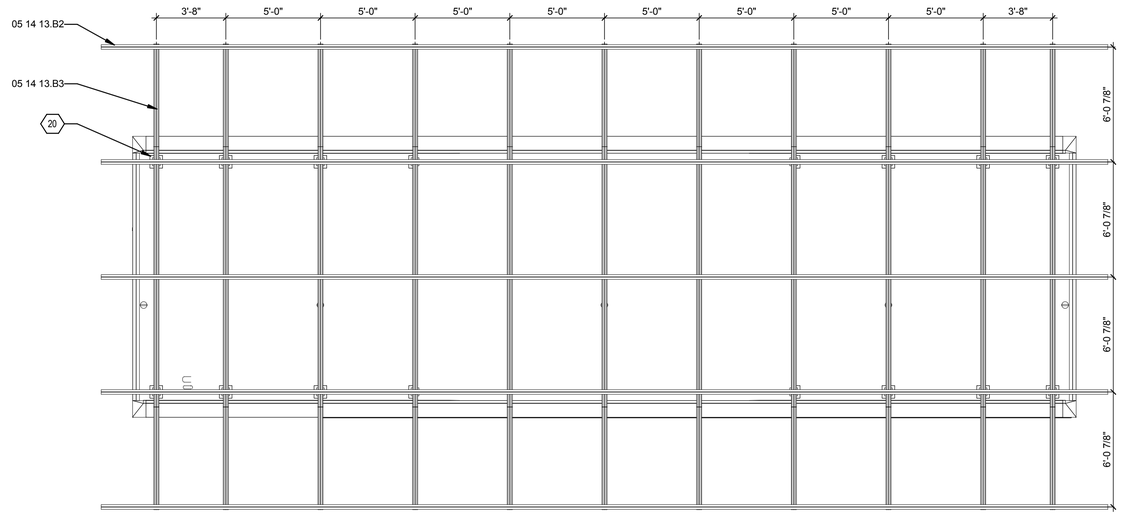


## D1 PHOTOVOLTAIC RACK PLAN

1/4" = 1'-0"

0 2' 4' 8'

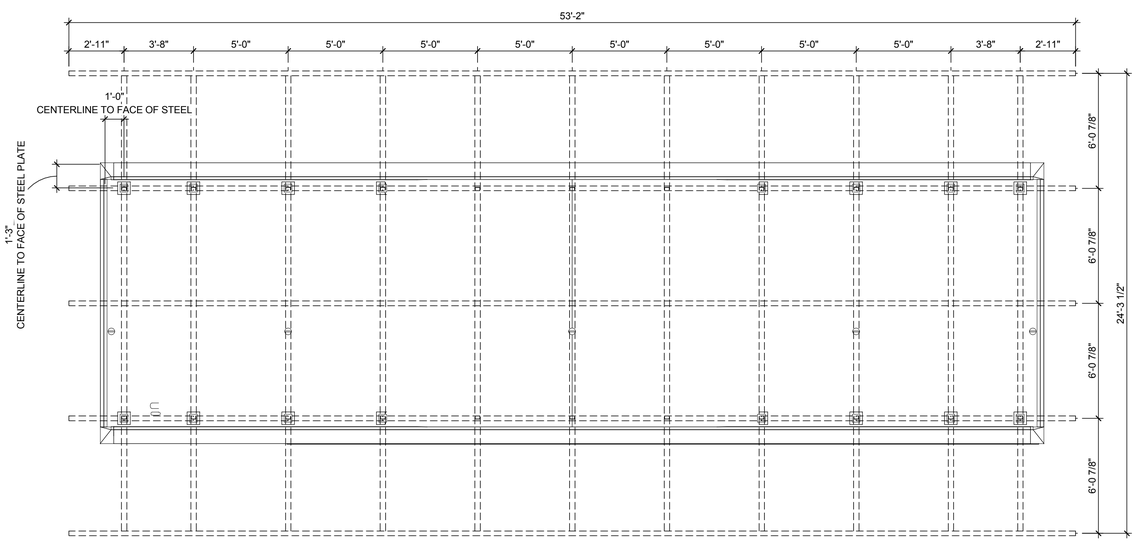


## A1 ROOF FOOTING PLAN

1/4" = 1'-0"

0 2' 4' 8'

8/13/2011 10:43:05 AM

## GENERAL SHEET NOTES

1. PV ARRAY OMITTED FOR CLARITY

## REFERENCE KEYNOTES

| | |
|---|---|
| 05 14 13.B2 | STANDARD RAIL |
| 05 14 13.B3 | POWER ARM |

## SHEET KEYNOTES

| | |
|---|---|
| 20 | REFERENCE A1/A-507 FOR ROOF RACK DETAIL |

LIVING LIGHT

| | |
|---|---|
| TEAM NAME: | TENNESSEE |
| ADDRESS: | UNIVERSITY OF TENNESSEE<br>1715 VOLUNTEER BLVD., RM 313<br>KNOXVILLE, TN 37996 |
| CONTACT: | LIVLIGHT@UTK.EDU<br>HTTP://LIVINGLIGHTUTK.COM |

CONSULTANTS

JAMES ROSE ARCHITECT
MALLIA ENGINEERING
ROSS BRYAN ASSOCIATES
RICHARD KELSO
LEON TOLBERT

CLIENT

U.S. DEPARTMENT OF ENERGY
SOLAR DECATHLON 2011
WWW.SOLARDECATHLON.GOV

U.S. DEPARTMENT OF ENERGY SOLAR DECATHLON

| MARK | DATE | DESCRIPTION |
|---|---|---|

| | |
|---|---|
| LOT NUMBER: | 202 |
| DRAWN BY: | JOHN HAND |
| CHECKED BY: | JAMES ROSE |
| COPYRIGHT: | NONE: PROJECT IS PUBLIC DOMAIN |

SHEET TITLE

ROOF RACK PLAN

A-103

| CEILING LEGEND | | | |
|---|---|---|---|
| | FINISH GRADE PLYWOOD | | 8 " X 36" ERV SUPPLY GRILLE |
| | SUSPENDED PLANK WOOD CEILING | | 8" X 24" EXHAUST GRILLE |
| | LINEAR FIXTURE | | 5" CAN LIGHT |
| | SPRINKLER HEAD, 180 DEGREE SPREAD (360 DEGREE SPREAD AT MECHANICAL ROOM) | OC | OCCUPANCY SENSOR |
| | SMOKE DETECTOR | MS | MULTI SENSOR |

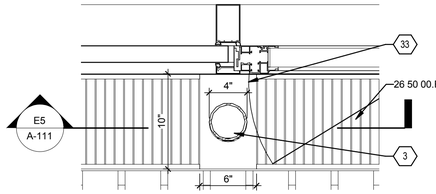


E3 COLUMN PLAN DETAIL
1 1/2" = 1'-0"

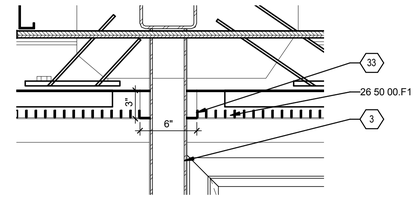


E5 COLUMN DETAIL SECTION
1 1/2" = 1'-0"

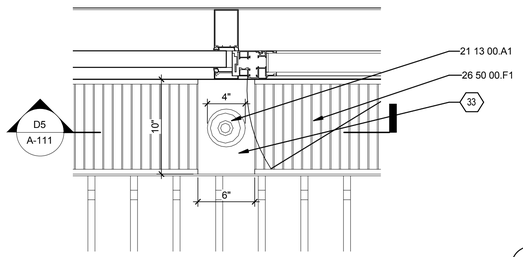


D3 FIRE SPRINKLER PLAN DETAIL
1 1/2" = 1'-0"

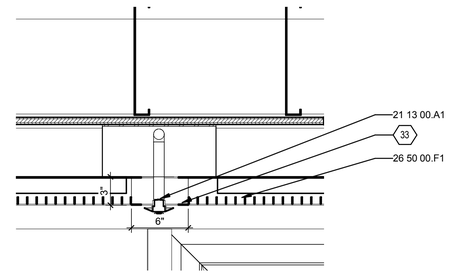


D5 FIRE SPRINKLER SECTION DETAIL
1 1/2" = 1'-0"

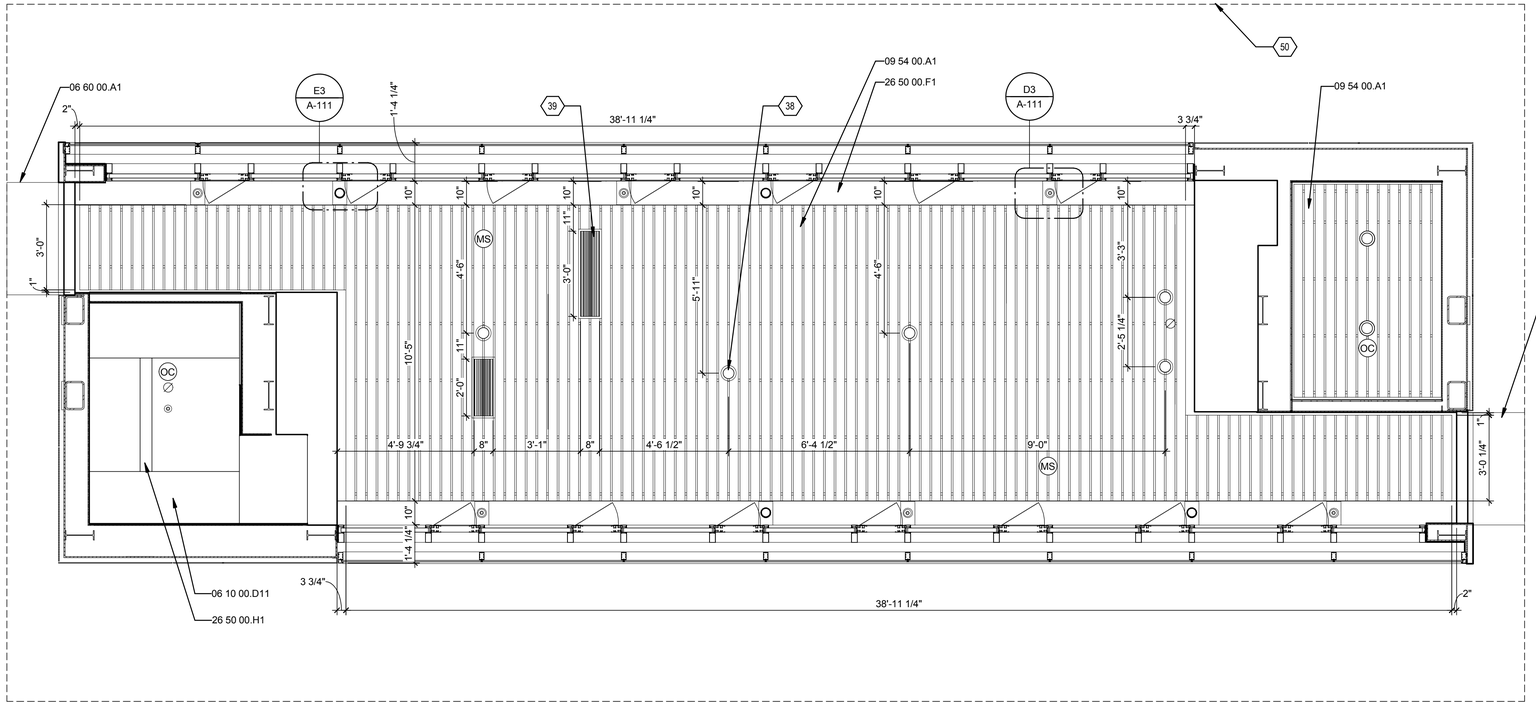


A1 REFLECTED CEILING PLAN
3/8" = 1'-0"

## GENERAL SHEET NOTES

1. REFRENCE SHEET E-102 FOR LIGHTING PLAN

## REFERENCE KEYNOTES

| | |
|---|---|
| 06 10 00.D11 | 3/4" PLYWOOD |
| 06 60 00.A1 | 1-1/4" ACRYLIC AWNING, FROSTED |
| 09 54 00.A1 | SUSPENDED PLANK ACOUSTICAL WOOD CEILING |
| 21 13 00.A1 | CONCEALED SPRINKLER HEAD, 180 DEGREE SPREAD |
| 26 50 00.F1 | 4' TUBULAR FLUORESCENT LAMP IN 10" WIDE CUSTOM ALUMINUM CHANNEL WITH LOUVER BAFFLE |
| 26 50 00.H1 | 4' LINEAR TUBULAR FLUORESCENT LIGHT FIXTURE |

## SHEET KEYNOTES

| | |
|---|---|
| 3 | STEEL COLUMN, REFERENCE SHEET S-102 |
| 33 | CUSTOM ALUMINUM PLATE |
| 37 | RESIDENTIAL FIRE SPRINKLER SYSTEM, REFERENCE SHEET F-101 |
| 38 | LED LIGHT FIXTURE, REFERENCE E-102 |
| 39 | MECHANICAL DIFFUSER, REFERENCE M-101 |
| 50 | OUTLINE OF SOLAR PANEL ARRAY ABOVE |

LIVING LIGHT


TEAM NAME: TENNESSEE
ADDRESS: UNIVERSITY OF TENNESSEE
1715 VOLUNTEER BLVD., RM 313
KNOXVILLE, TN 37996
CONTACT: LIVLIGHT@UTK.EDU
HTTP://LIVINGLIGHTUTK.COM


CONSULTANTS
JAMES ROSE ARCHITECT
MALLIA ENGINEERING
ROSS BRYAN ASSOCIATES
RICHARD KELSO
LEON TOLBERT

CLIENT
U.S. DEPARTMENT OF ENERGY
SOLAR DECATHLON 2011
WWW.SOLARDECATHLON.GOV

U.S. DEPARTMENT OF ENERGY SOLAR DECATHLON

| MARK | DATE | DESCRIPTION |
|---|---|---|

| | |
|---|---|
| LOT NUMBER: | 202 |
| DRAWN BY: | D. PARRY & B. CASTRO |
| CHECKED BY: | JAMES ROSE |
| COPYRIGHT: | NONE: PROJECT IS PUBLIC DOMAIN |

SHEET TITLE
FIRST FLOOR REFLECTED CEILING PLAN

A-111

8/13/2011 10:43:12 AM

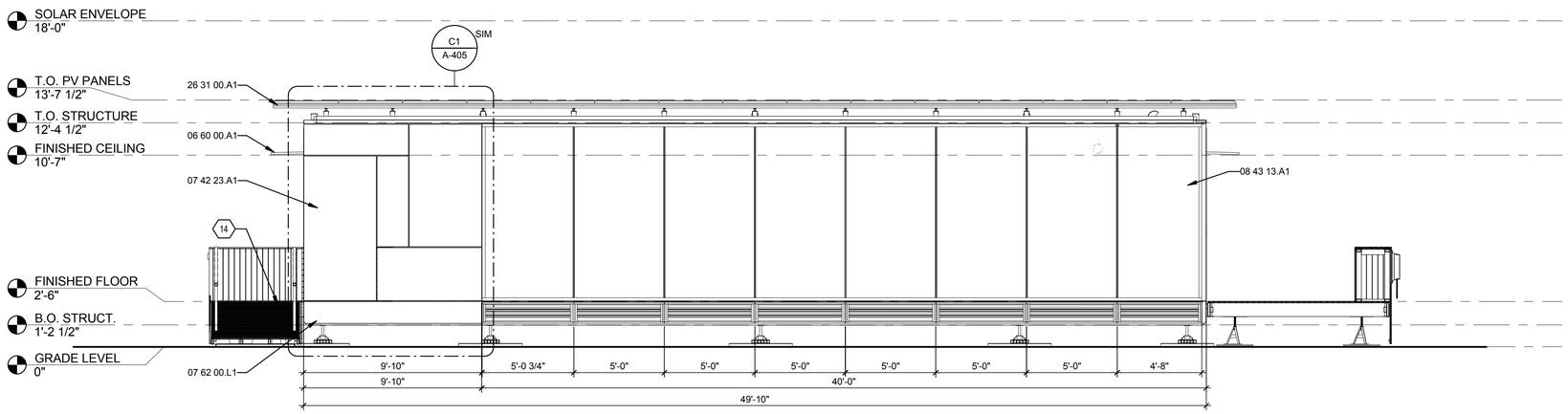


## D1 NORTH ELEVATION

1/4" = 1'-0"

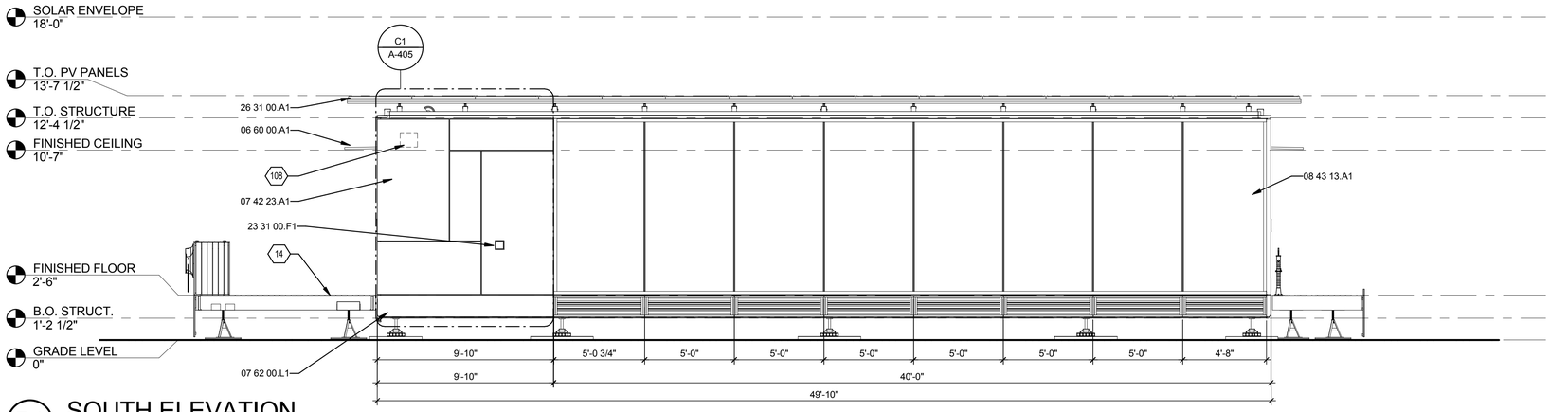


## B1 SOUTH ELEVATION

1/4" = 1'-0"

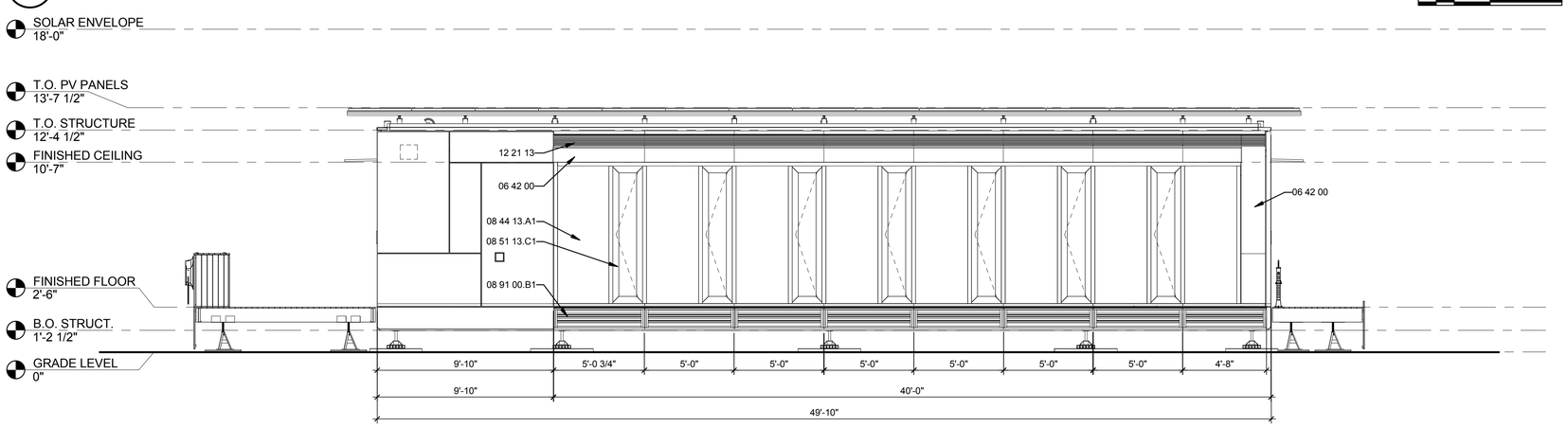


## A1 SOUTH ELEVATION AT INTERIOR FACADE (NORTH SIM.)

1/4" = 1'-0"

## GENERAL SHEET NOTES

1. DECK IN FRONT OF HOUSE OMITTED FOR CLARITY.

## REFERENCE KEYNOTES

| | |
|---|---|
| 06 42 00 | COMPOSITE WOOD PANELING |
| 06 60 00.A1 | 1-1/4" ACRYLIC AWNING, FROSTED |
| 07 42 23.A1 | COMPOSITE WOOD WALL PANELS |
| 07 62 00.L1 | ALUMINUM PANEL |
| 08 43 13.A1 | ALUMINUM-FRAMED STOREFRONT |
| 08 44 13.A1 | GLAZED ALUMINUM CURTAIN WALL |
| 08 51 13.C1 | ALUMINUM CASEMENT WINDOW |
| 08 91 00.B1 | 4" FIXED ALUMINUM LOUVER |
| 12 21 13 | HORIZONTAL LOUVER BLINDS |
| 23 31 00.F1 | HOODED WALL VENT WITH DAMPER |
| 26 31 00.A1 | PHOTOVOLTAIC COLLECTORS |

## SHEET KEYNOTES

| | |
|---|---|
| 14 | WOOD DECK, REFERENCE SHEET L-101 |
| 108 | FIELD APPLIED PERFORATION IN SOUTH FACADE PANEL AT MECHANICAL EXHAUST VENT. COORDINATE LOCATION WITH MECHANICAL AND ARCHITECT. |

LIVING LIGHT


TEAM NAME: TENNESSEE

ADDRESS: UNIVERSITY OF TENNESSEE
1715 VOLUNTEER BLVD., RM 313
KNOXVILLE, TN 37996

CONTACT: LIVLIGHT@UTK.EDU
HTTP://LIVINGLIGHTUTK.COM

CONSULTANTS

JAMES ROSE ARCHITECT
MALLIA ENGINEERING
ROSS BRYAN ASSOCIATES
RICHARD KELSO
LEON TOLBERT


CLIENT

U.S. DEPARTMENT OF ENERGY
SOLAR DECATHLON 2011
WWW.SOLARDECATHLON.GOV

U.S. DEPARTMENT OF ENERGY SOLAR DECATHLON

| MARK | DATE | DESCRIPTION |
|---|---|---|

| | |
|---|---|
| LOT NUMBER: | 202 |
| DRAWN BY: | AMANDA GANN |
| CHECKED BY: | JAMES ROSE |
| COPYRIGHT: | NONE: PROJECT IS PUBLIC DOMAIN |

SHEET TITLE

NORTH AND SOUTH ELEVATIONS

A-201

8/13/2011 10:43:28 AM

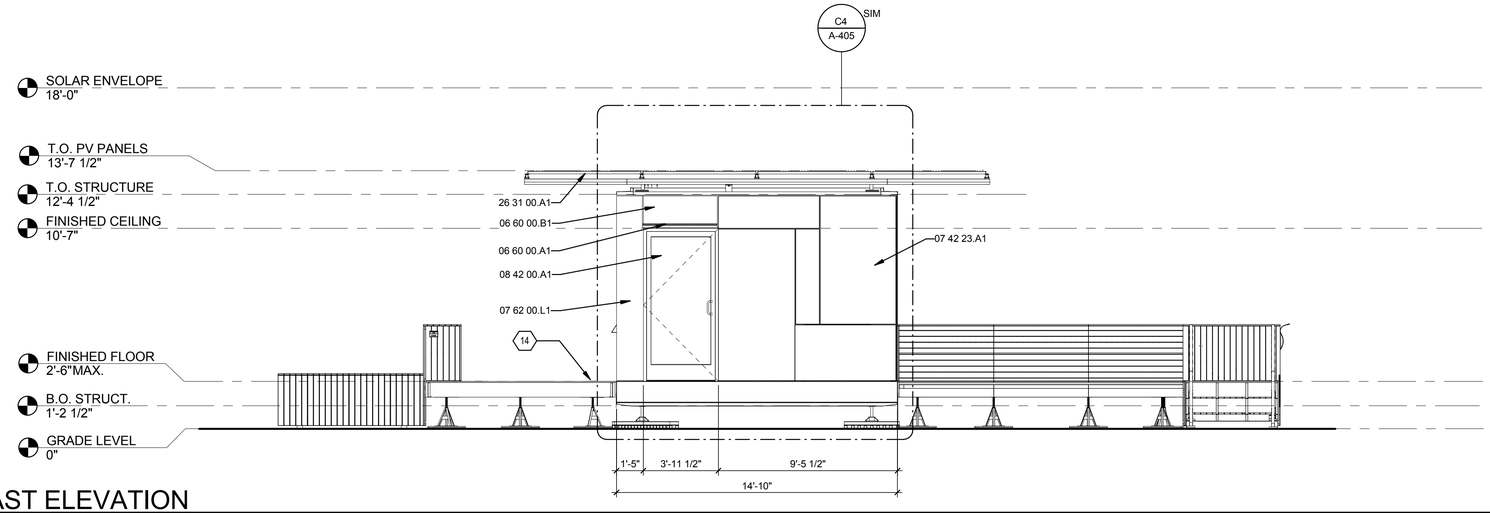


## D1 EAST ELEVATION

1/4" = 1'-0"

0 2' 4' 8'

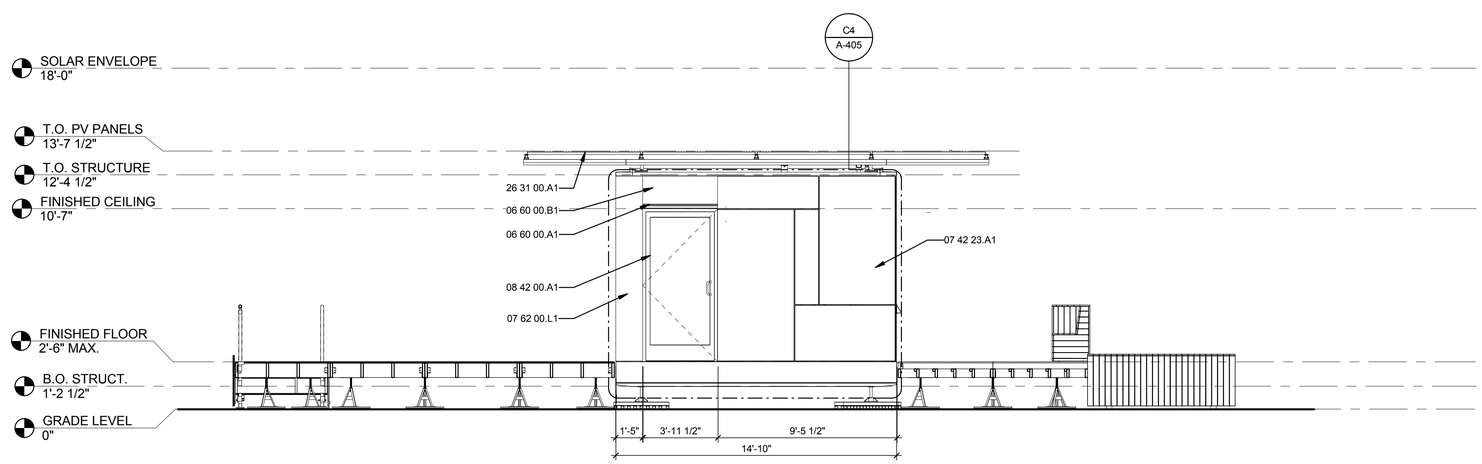


## A1 WEST ELEVATION

1/4" = 1'-0"

0 2' 4' 8'

## GENERAL SHEET NOTES

1. DECK IN FRONT OF HOUSE OMITTED FOR CLARITY.

## REFERENCE KEYNOTES

| | |
|---|---|
| 06 60 00.A1 | 1-1/4" ACRYLIC AWNING, FROSTED |
| 06 60 00.B1 | 1/4" ACRYLIC PANEL, FROSTED |
| 07 42 23.A1 | COMPOSITE WOOD WALL PANELS |
| 07 62 00.L1 | ALUMINUM PANEL |
| 08 42 00.A1 | ENTRANCE |
| 26 31 00.A1 | PHOTOVOLTAIC COLLECTORS |

## SHEET KEYNOTES

| | |
|---|---|
| 14 | WOOD DECK, REFERENCE SHEET L-101 |

LIVING LIGHT


TEAM NAME: TENNESSEE

ADDRESS: UNIVERSITY OF TENNESSEE
1715 VOLUNTEER BLVD., RM 313
KNOXVILLE, TN 37996

CONTACT: LIVLIGHT@UTK.EDU
HTTP://LIVINGLIGHTUTK.COM

CONSULTANTS

JAMES ROSE ARCHITECT

MALLIA ENGINEERING

ROSS BRYAN ASSOCIATES

RICHARD KELSO

LEON TOLBERT


CLIENT

U.S. DEPARTMENT OF ENERGY

SOLAR DECATHLON 2011

WWW.SOLARDECATHLON.GOV

U.S. DEPARTMENT OF ENERGY SOLAR DECATHLON

| MARK | DATE | DESCRIPTION |
|---|---|---|

| | |
|---|---|
| LOT NUMBER: | 202 |
| DRAWN BY: | AMANDA GANN |
| CHECKED BY: | JAMES ROSE |
| COPYRIGHT: | NONE: PROJECT IS PUBLIC DOMAIN |

SHEET TITLE

# EAST AND WEST ELEVATIONS

# A-202

8/13/2011 10:43:36 AM

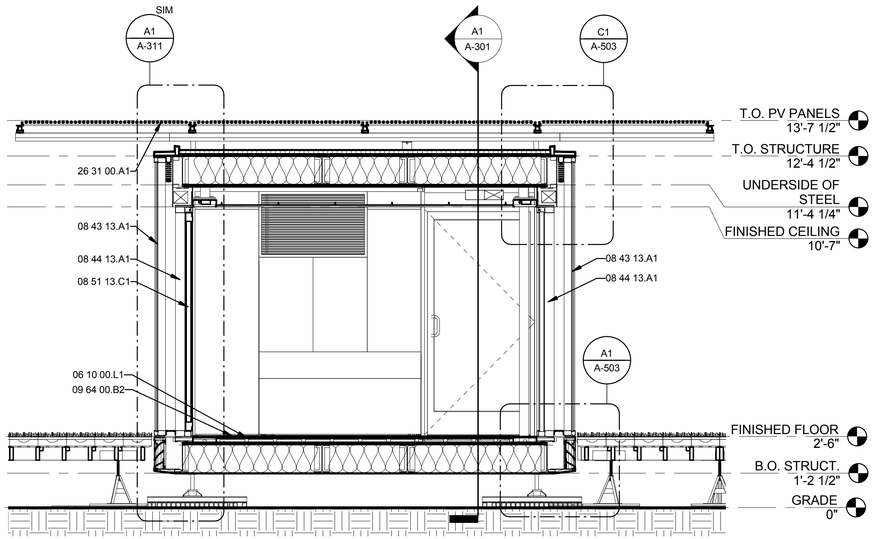


C1 TRANSVERSE SECTION LOOKING EAST
3/8" = 1'-0"

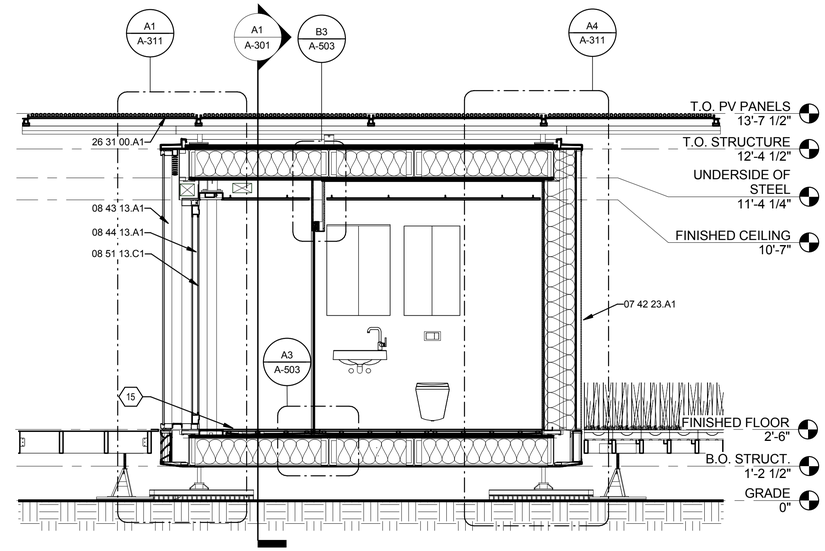


C4 TRANSVERSE SECTION LOOKING WEST
3/8" = 1'-0"

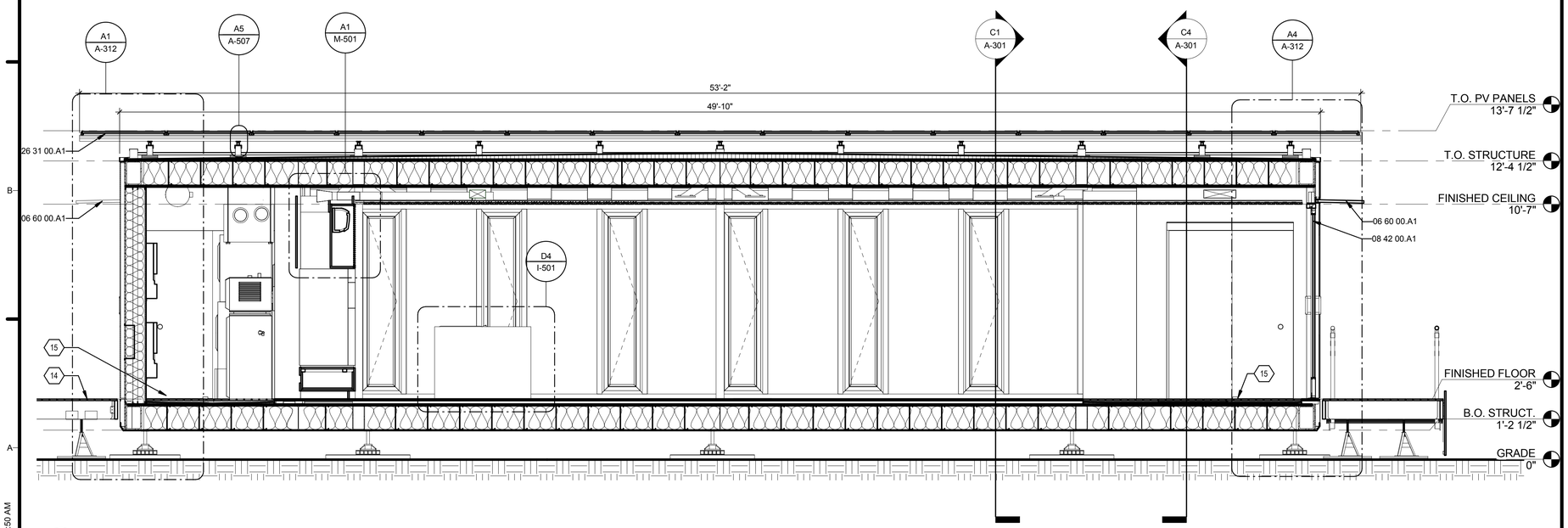


A1 LONGITUDINAL SECTION LOOKING NORTH
3/8" = 1'-0"

## GENERAL SHEET NOTES

## REFERENCE KEYNOTES

| | |
|---|---|
| 06 10 00.L1 | 2X WOOD SLEEPER, 12" O.C. |
| 06 60 00.A1 | 1-1/4" ACRYLIC AWNING, FROSTED |
| 07 42 23.A1 | COMPOSITE WOOD WALL PANELS |
| 08 42 00.A1 | ENTRANCE |
| 08 43 13.A1 | ALUMINUM-FRAMED STOREFRONT |
| 08 44 13.A1 | GLAZED ALUMINUM CURTAIN WALL |
| 08 51 13.C1 | ALUMINUM CASEMENT WINDOW |
| 09 64 00.B2 | 3/4" HARDWOOD FLOORING |
| 26 31 00.A1 | PHOTOVOLTAIC COLLECTORS |

## SHEET KEYNOTES

| | |
|---|---|
| 14 | WOOD DECK, REFERENCE SHEET L-101 |
| 15 | INTERIOR DRAINAGE FLOOR, REFERENCE P-501 |

LIVING LIGHT


TEAM NAME: TENNESSEE
ADDRESS: UNIVERSITY OF TENNESSEE
1715 VOLUNTEER BLVD., RM 313
KNOXVILLE, TN 37996
CONTACT: LIVLIGHT@UTK.EDU
HTTP://LIVINGLIGHTUTK.COM

CONSULTANTS
JAMES ROSE ARCHITECT
MALLIA ENGINEERING
ROSS BRYAN ASSOCIATES
RICHARD KELSO
LEON TOLBERT


CLIENT
U.S. DEPARTMENT OF ENERGY
SOLAR DECATHLON 2011
WWW.SOLARDECATHLON.GOV

U.S. DEPARTMENT OF ENERGY SOLAR DECATHLON

| MARK | DATE | DESCRIPTION |
|---|---|---|

| | |
|---|---|
| LOT NUMBER: | 202 |
| DRAWN BY: | KATIE BURKE |
| CHECKED BY: | JAMES ROSE |
| COPYRIGHT: | NONE: PROJECT IS PUBLIC DOMAIN |

SHEET TITLE
BUILDING SECTIONS

A-301

8/13/2011 10:43:50 AM

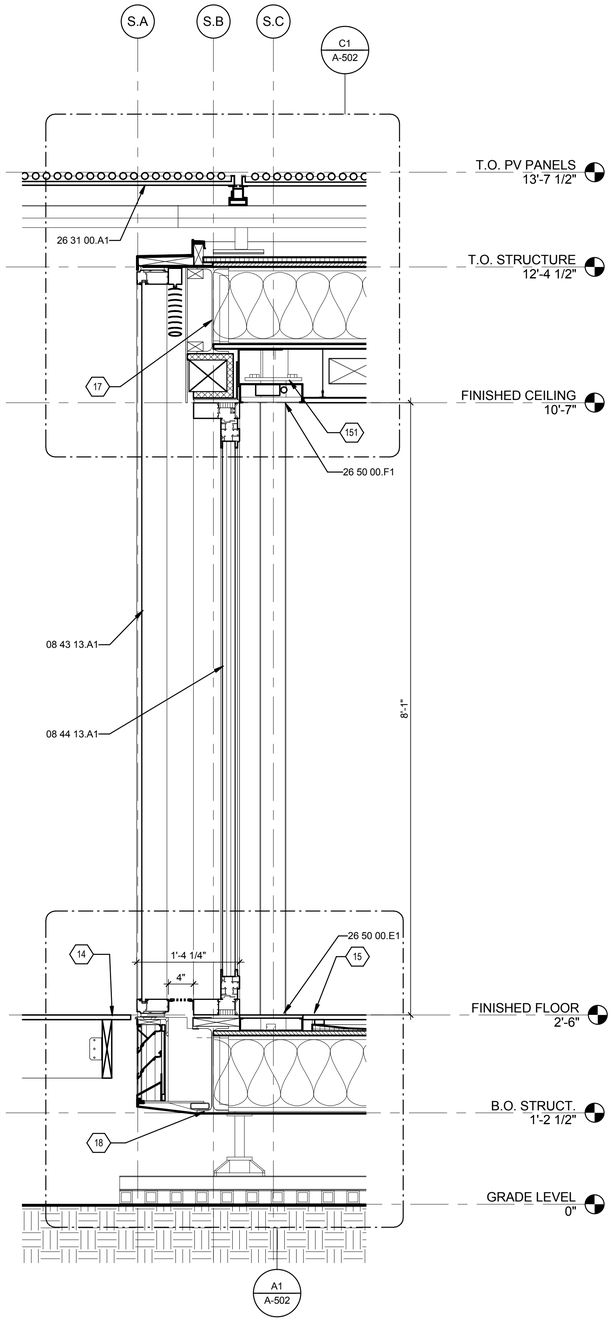


A1 DOUBLE FACADE WALL SECTION AT SOUTH WALL (NORTH SIM.)

1" = 1'-0"

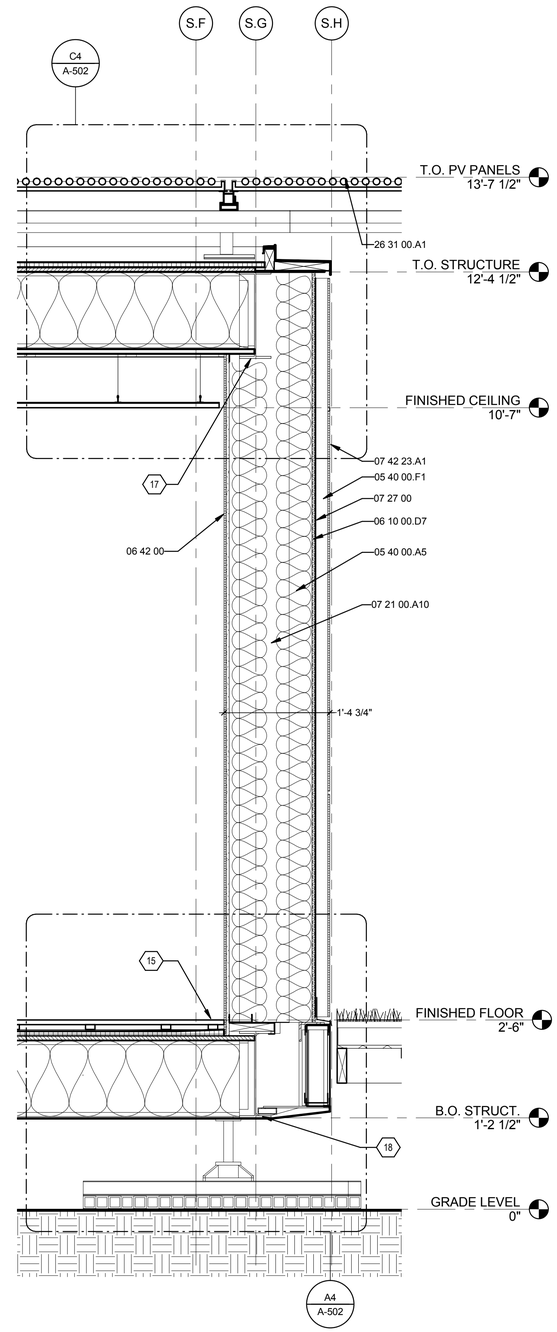


A4 CORE WALL SECTION AT NORTH WALL (SOUTH SIM.)

1" = 1'-0"

## GENERAL SHEET NOTES

## REFERENCE KEYNOTES

| | |
|---|---|
| 05 40 00.A5 | 3-5/8" METAL STUD |
| 05 40 00.F1 | 2" Z-CHANNEL |
| 06 10 00.D7 | 1/2" EXTERIOR GRADE PLYWOOD |
| 06 42 00 | COMPOSITE WOOD PANELING |
| 07 21 00.A10 | BATT INSULATION |
| 07 27 00 | WATER RESISTIVE WEATHER BARRIER |
| 07 42 23.A1 | COMPOSITE WOOD WALL PANELS |
| 08 43 13.A1 | ALUMINUM-FRAMED STOREFRONT |
| 08 44 13.A1 | GLAZED ALUMINUM CURTAIN WALL |
| 26 31 00.A1 | PHOTOVOLTAIC COLLECTORS |
| 26 50 00.E1 | 4' COLOR CHANGE LED LAMP IN 10" WIDE CUSTOM ALUMINUM CHANNEL WITH 1/2" FROSTED TEMPERED GLASS COVER |
| 26 50 00.F1 | 4' TUBULAR FLUORESCENT LAMP IN 10" WIDE CUSTOM ALUMINUM CHANNEL WITH LOUVER BAFFLE |

## SHEET KEYNOTES

| | |
|---|---|
| 14 | WOOD DECK, REFERENCE SHEET L-101 |
| 15 | INTERIOR DRAINAGE FLOOR, REFERENCE P-501 |
| 17 | STEEL BEAM, REFERENCE SHEET S-103 |
| 18 | STEEL BEAM, REFERENCE SHEET S-102 |
| 151 | BLOCK AS NEEDED TO SUPPORT LIGHT TROUGH |

LIVING LIGHT


TEAM NAME: TENNESSEE

ADDRESS: UNIVERSITY OF TENNESSEE
1715 VOLUNTEER BLVD., RM 313
KNOXVILLE, TN 37996

CONTACT: LIVLIGHT@UTK.EDU
HTTP://LIVINGLIGHTUTK.COM

CONSULTANTS

JAMES ROSE ARCHITECT

MALLIA ENGINEERING

ROSS BRYAN ASSOCIATES

RICHARD KELSO

LEON TOLBERT


CLIENT

U.S. DEPARTMENT OF ENERGY

SOLAR DECATHLON 2011

WWW.SOLARDECATHLON.GOV

U.S. DEPARTMENT OF ENERGY SOLAR DECATHLON

| MARK | DATE | DESCRIPTION |
|---|---|---|

| | |
|---|---|
| LOT NUMBER: | 202 |
| DRAWN BY: | KATIE BURKE |
| CHECKED BY: | JAMES ROSE |
| COPYRIGHT: | NONE: PROJECT IS PUBLIC DOMAIN |

SHEET TITLE

WALL SECTIONS

A-311

8/13/2011 10:43:56 AM

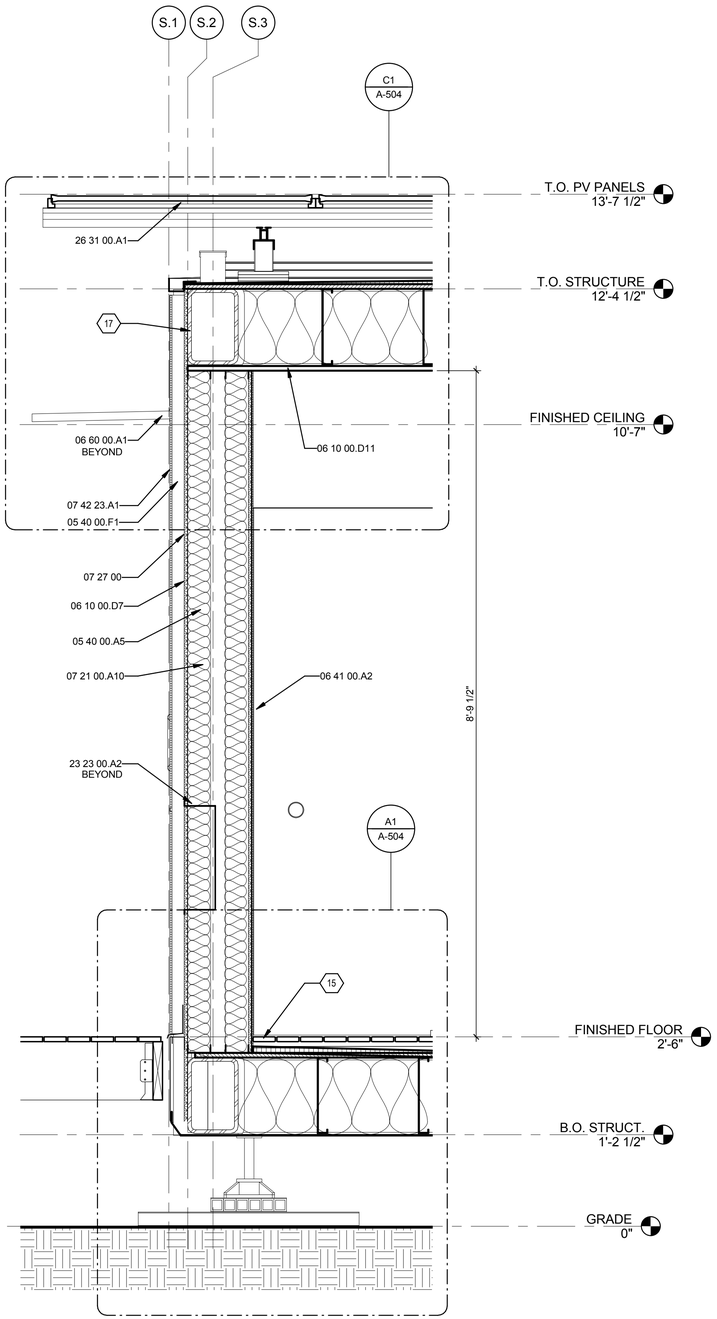


A1 CORE WALL SECTION AT WEST WALL (EAST SIM)

1" = 1'-0"

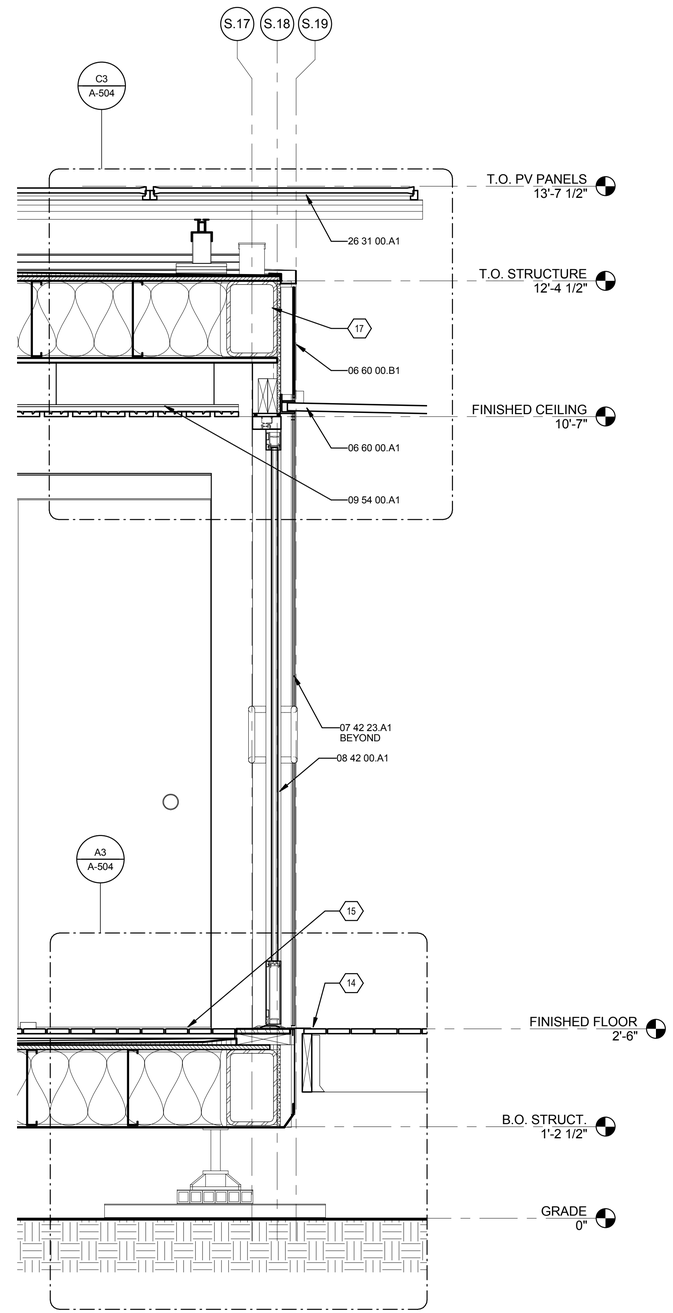


A4 WALL SECTION AT ENTRANCE

1" = 1'-0"

## GENERAL SHEET NOTES

## REFERENCE KEYNOTES

| | |
|---|---|
| 05 40 00.A5 | 3-5/8" METAL STUD |
| 05 40 00.F1 | 2" Z-CHANNEL |
| 06 10 00.D7 | 1/2" EXTERIOR GRADE PLYWOOD |
| 06 10 00.D11 | 3/4" PLYWOOD |
| 06 41 00.A2 | 1/4" FINISHED PLYWOOD |
| 06 60 00.A1 | 1-1/4" ACRYLIC AWNING, FROSTED |
| 06 60 00.B1 | 1/4" ACRYLIC PANEL, FROSTED |
| 07 21 00.A10 | BATT INSULATION |
| 07 27 00 | WATER RESISTIVE WEATHER BARRIER |
| 07 42 23.A1 | COMPOSITE WOOD WALL PANELS |
| 08 42 00.A1 | ENTRANCE |
| 09 54 00.A1 | SUSPENDED PLANK ACOUSTICAL WOOD CEILING |
| 23 23 00.A2 | REFRIGERANT PIPING CONNECTOR BOX |
| 26 31 00.A1 | PHOTOVOLTAIC COLLECTORS |

## SHEET KEYNOTES

| | |
|---|---|
| 14 | WOOD DECK, REFERENCE SHEET L-101 |
| 15 | INTERIOR DRAINAGE FLOOR, REFERENCE P-501 |
| 17 | STEEL BEAM, REFERENCE SHEET S-103 |

LIVING LIGHT


TEAM NAME: TENNESSEE

ADDRESS: UNIVERSITY OF TENNESSEE
1715 VOLUNTEER BLVD., RM 313
KNOXVILLE, TN 37996

CONTACT: LIVLIGHT@UTK.EDU
HTTP://LIVINGLIGHTUTK.COM

CONSULTANTS

JAMES ROSE ARCHITECT

MALLIA ENGINEERING

ROSS BRYAN ASSOCIATES

RICHARD KELSO

LEON TOLBERT


CLIENT

U.S. DEPARTMENT OF ENERGY

SOLAR DECATHLON 2011

WWW.SOLARDECATHLON.GOV

U.S. DEPARTMENT OF ENERGY SOLAR DECATHLON

| MARK | DATE | DESCRIPTION |
|---|---|---|

| | |
|---|---|
| LOT NUMBER: | 202 |
| DRAWN BY: | KATIE BURKE |
| CHECKED BY: | JAMES ROSE |
| COPYRIGHT: | NONE: PROJECT IS PUBLIC DOMAIN |

SHEET TITLE

WALL SECTIONS

A-312

8/13/2011 10:44:01 AM

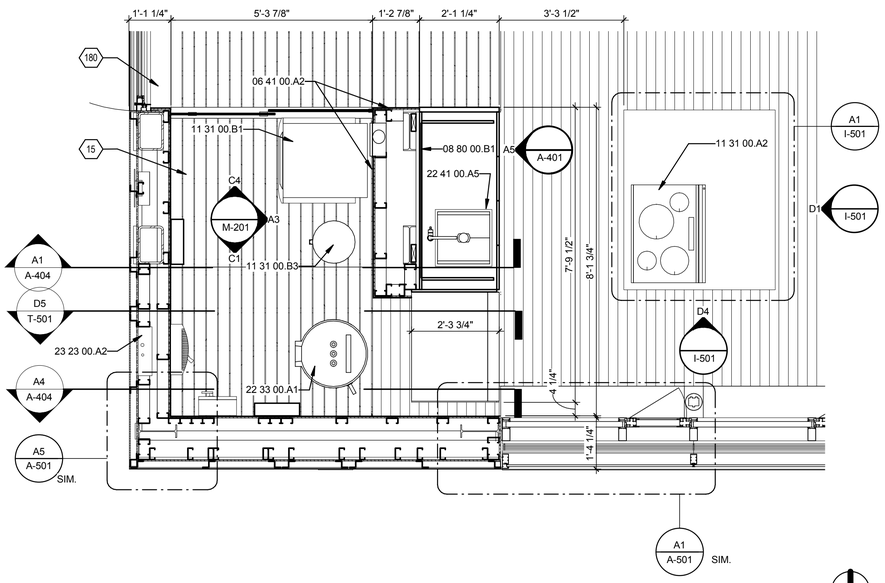


## C1 WEST CORE ENLARGED PLAN

1/2" = 1'-0"

0 1' 2' 4'

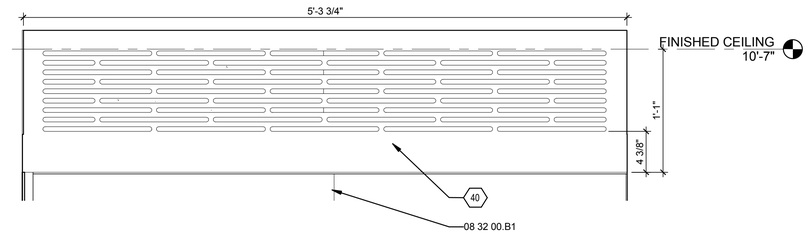


## E4 CUSTOM GRILLE ELEVATION

1 1/2" = 1'-0"

0 1/2' 1' 1 1/2'

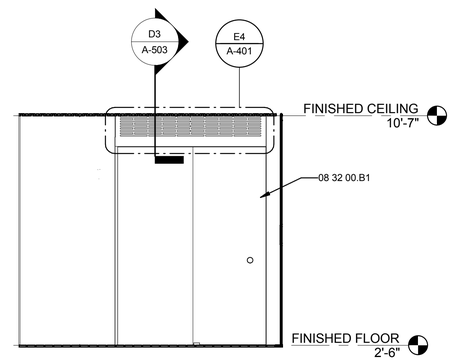


## C5 ENTRANCE TO MECHANICAL ROOM

3/8" = 1'-0"

0 2' 4' 6'

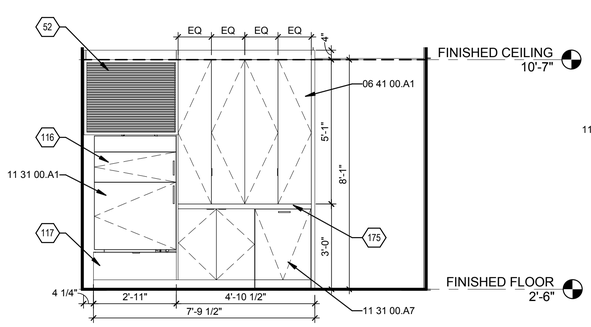


## A1 KITCHEN CABINETRY

3/8" = 1'-0"

0 2' 4' 6'

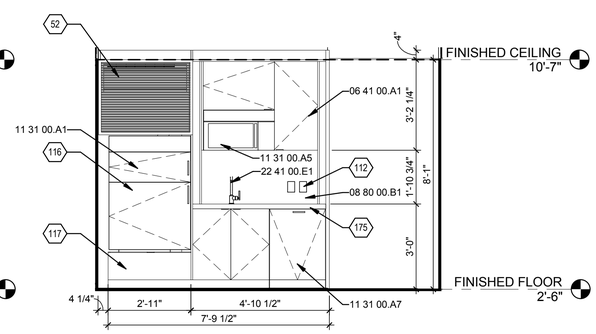


## A3 KITCHEN CABINETRY BEHIND DOORS

3/8" = 1'-0"

0 2' 4' 6'

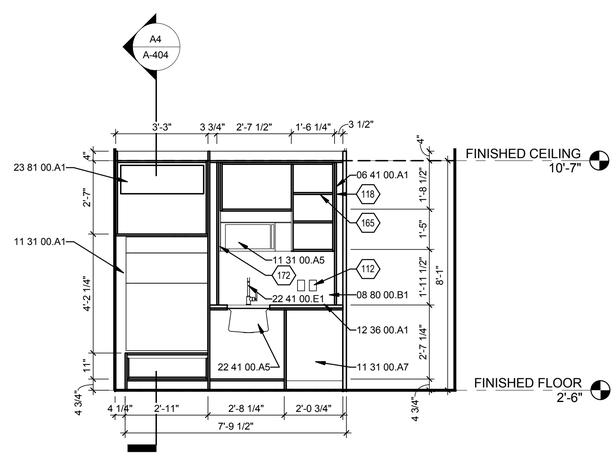


## A5 KITCHEN CABINETRY SECTION

3/8" = 1'-0"

0 2' 4' 6'

8/13/2011 10:44:07 AM

## GENERAL SHEET NOTES

## REFERENCE KEYNOTES

| | |
|---|---|
| 06 41 00.A1 | CUSTOM WOOD CASEWORK |
| 06 41 00.A2 | 1/4" FINISHED PLYWOOD |
| 08 32 00.B1 | SLIDING ALUMINUM-FRAMED GLASS DOOR |
| 08 80 00.B1 | GLASS BACKSPLASH |
| 11 31 00.A1 | REFRIGERATOR |
| 11 31 00.A2 | COOKTOP |
| 11 31 00.A5 | OVEN |
| 11 31 00.A7 | DISHWASHER |
| 11 31 00.B1 | CLOTHES WASHER |
| 11 31 00.B3 | SPIN DRYER |
| 12 36 00.A1 | COUNTERTOP |
| 22 33 00.A1 | HEAT PUMP ELECTRIC WATER HEATER |
| 22 41 00.A5 | UNDER COUNTER SINK |
| 22 41 00.E1 | FAUCET |
| 23 23 00.A2 | REFRIGERANT PIPING CONNECTOR BOX |
| 23 81 00.A1 | DUCTLESS MINI-SPLIT INDOOR UNIT, PAINT BLACK |

## SHEET KEYNOTES

| | |
|---|---|
| 15 | INTERIOR DRAINAGE FLOOR, REFERENCE P-501 |
| 40 | PERFORATED WOOD PANEL GRILLE, PROVIDED BY OWNER |
| 52 | ALUMINUM GRILLE, PAINT BLACK. REFERENCE SHEET M-601. PROVIDE WOOD FRAME TO COVER GRILLE FLANGE. ALIGN FACE OF WOOD FRAME WITH SURROUNDING CASEWORK. |
| 112 | ELECTRICAL OUTLET, REFERENCE SHEET E-101 |
| 116 | REFRIGERATOR WITH (3) UNFINISHED WOOD PANELS AT FRONT, FACTORY APPLIED. PANELS TO BE FINISHED TO MATCH CABINETRY. |
| 117 | WOOD DRAWER |
| 118 | 3/4" MATERIAL, TYP. |
| 165 | ADJUSTABLE SHELVES |
| 172 | FILLER PIECE, RECESSED TO CLEAR OVEN DOOR |
| 175 | PROVIDE 3/4" WOOD NOSING AT FACE OF COUNTERTOP |
| 180 | PROVIDE METAL PLATE AT DOOR THRESHOLD. ALIGN WITH INTERIOR FACE OF WALL. |

LIVING LIGHT


TEAM NAME: TENNESSEE

ADDRESS: UNIVERSITY OF TENNESSEE
1715 VOLUNTEER BLVD., RM 313
KNOXVILLE, TN 37996

CONTACT: LIVLIGHT@UTK.EDU
HTTP://LIVINGLIGHTUTK.COM

CONSULTANTS

JAMES ROSE ARCHITECT

MALLIA ENGINEERING

ROSS BRYAN ASSOCIATES

RICHARD KELSO

LEON TOLBERT


CLIENT

U.S. DEPARTMENT OF ENERGY

SOLAR DECATHLON 2011

WWW.SOLARDECATHLON.GOV

U.S. DEPARTMENT OF ENERGY SOLAR DECATHLON

| MARK | DATE | DESCRIPTION |
|---|---|---|

| | |
|---|---|
| LOT NUMBER: | 202 |
| DRAWN BY: | LAUREN MCCARTY |
| CHECKED BY: | JAMES ROSE |
| COPYRIGHT: | NONE: PROJECT IS PUBLIC DOMAIN |

SHEET TITLE

ENLARGED WEST CORE PLAN AND ELEVATIONS

A-401

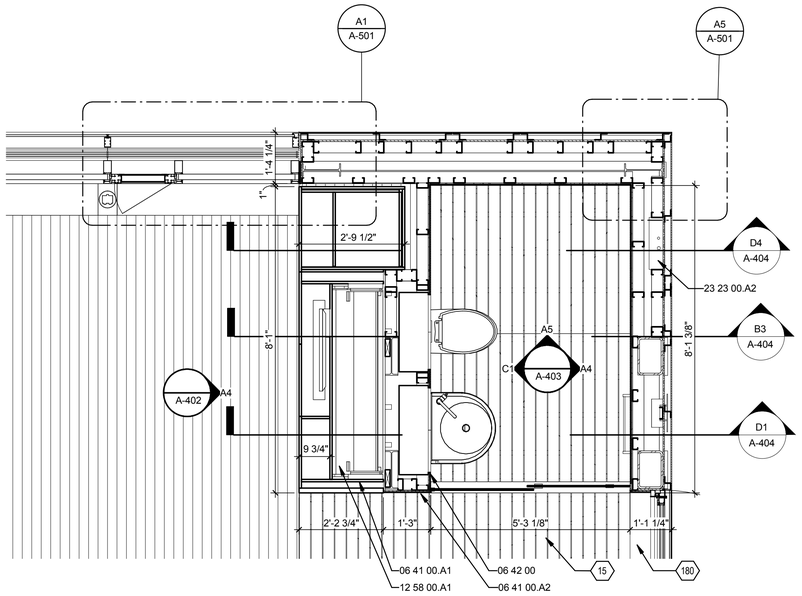


## C1 EAST CORE ENLARGED PLAN
1/2" = 1'-0"

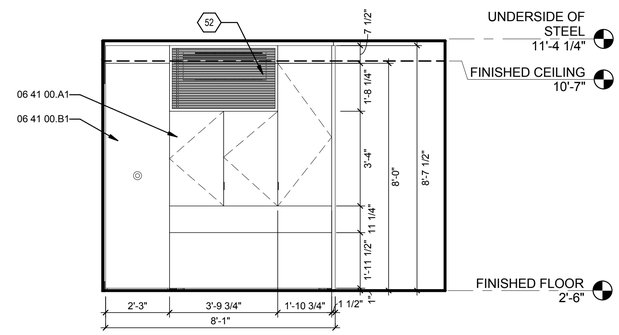


## C4 BEDROOM CABINETRY
3/8" = 1'-0"

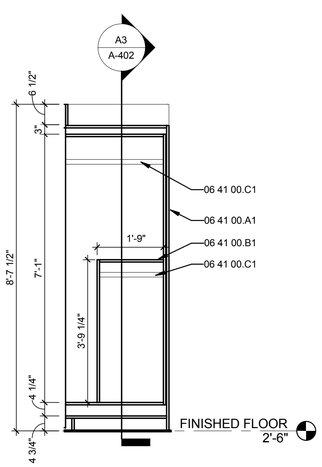


## A1 CLOSET CABINETRY
1/2" = 1'-0"

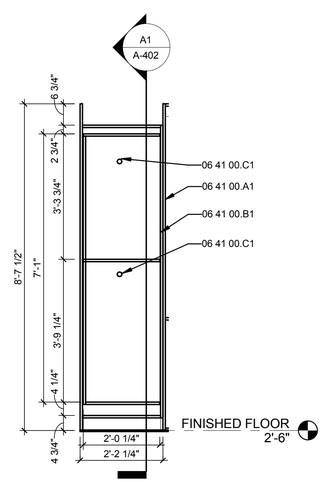


## A3 CLOSET CABINETRY
1/2" = 1'-0"

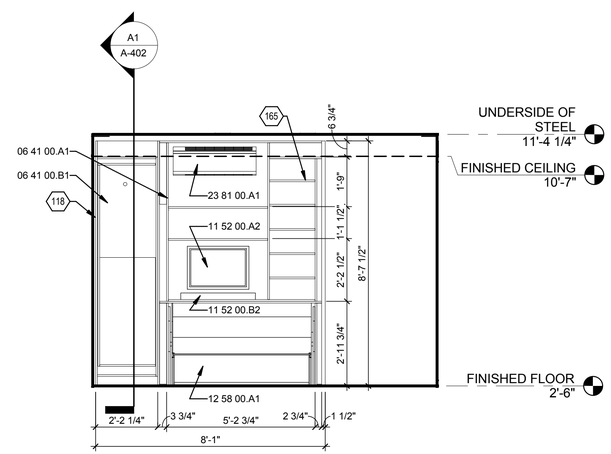


## A4 BEDROOM CABINETRY SECTION
3/8" = 1'-0"

## GENERAL SHEET NOTES

## REFERENCE KEYNOTES

| | |
|---|---|
| 06 41 00.A1 | CUSTOM WOOD CASEWORK |
| 06 41 00.A2 | 1/4" FINISHED PLYWOOD |
| 06 41 00.B1 | CUSTOM WOOD PULL-OUT CLOSET |
| 06 41 00.C1 | 1 1/2" DIA. ROD |
| 06 42 00 | COMPOSITE WOOD PANELING |
| 11 52 00.A2 | TELEVISION, PROVIDED BY OTHERS |
| 11 52 00.B2 | AUDIO SYSTEM, PROVIDED BY OTHERS |
| 12 58 00.A1 | MURPHY BED |
| 23 23 00.A2 | REFRIGERANT PIPING CONNECTOR BOX |
| 23 81 00.A1 | DUCTLESS MINI-SPLIT INDOOR UNIT, PAINT BLACK |

## SHEET KEYNOTES

| | |
|---|---|
| 15 | INTERIOR DRAINAGE FLOOR, REFERENCE P-501 |
| 52 | ALUMINUM GRILLE, PAINT BLACK. REFERENCE SHEET M-601. PROVIDE WOOD FRAME TO COVER GRILLE FLANGE. ALIGN FACE OF WOOD FRAME WITH SURROUNDING CASEWORK. |
| 118 | 3/4" MATERIAL, TYP. |
| 165 | ADJUSTABLE SHELVES |
| 180 | PROVIDE METAL PLATE AT DOOR THRESHOLD. ALIGN WITH INTERIOR FACE OF WALL. |

LIVING LIGHT


TEAM NAME: TENNESSEE
ADDRESS: UNIVERSITY OF TENNESSEE
1715 VOLUNTEER BLVD., RM 313
KNOXVILLE, TN 37996
CONTACT: LIVLIGHT@UTK.EDU
HTTP://LIVINGLIGHTUTK.COM

CONSULTANTS
JAMES ROSE ARCHITECT
MALLIA ENGINEERING
ROSS BRYAN ASSOCIATES
RICHARD KELSO
LEON TOLBERT


CLIENT
U.S. DEPARTMENT OF ENERGY
SOLAR DECATHLON 2011
WWW.SOLARDECATHLON.GOV

U.S. DEPARTMENT OF ENERGY SOLAR DECATHLON

| MARK | DATE | DESCRIPTION |
|---|---|---|

| | |
|---|---|
| LOT NUMBER: | 202 |
| DRAWN BY: | L. BELLAMY |
| CHECKED BY: | JAMES ROSE |
| COPYRIGHT: | NONE: PROJECT IS PUBLIC DOMAIN |

SHEET TITLE
ENLARGED EAST CORE PLAN AND ELEVATIONS

A-402

8/13/2011 10:44:11 AM

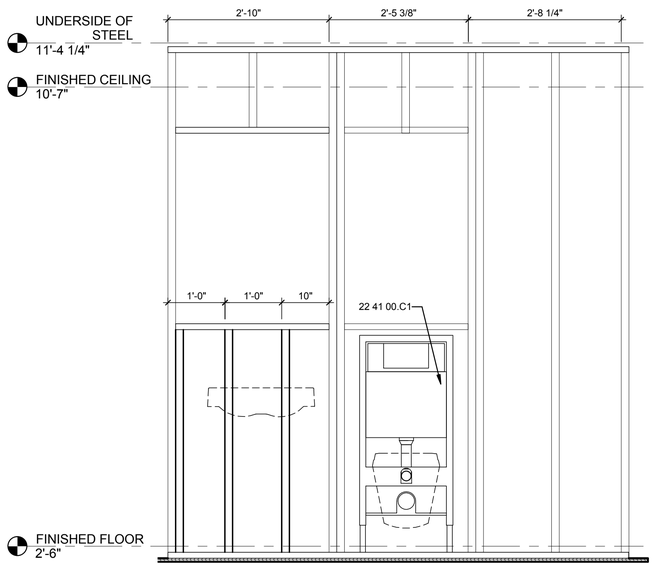


C1 STUD FRAMING AT BATHROOM WEST WALL
3/4" = 1'-0"

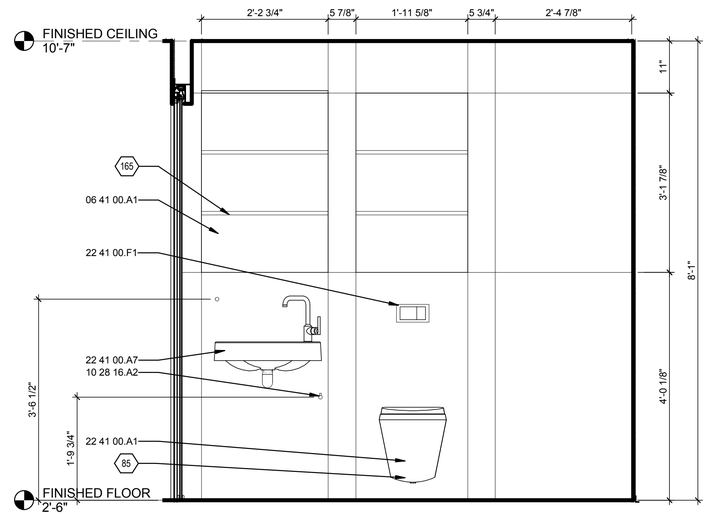


C4 BATHROOM CABINETRY WITHOUT DOORS
3/4" = 1'-0"

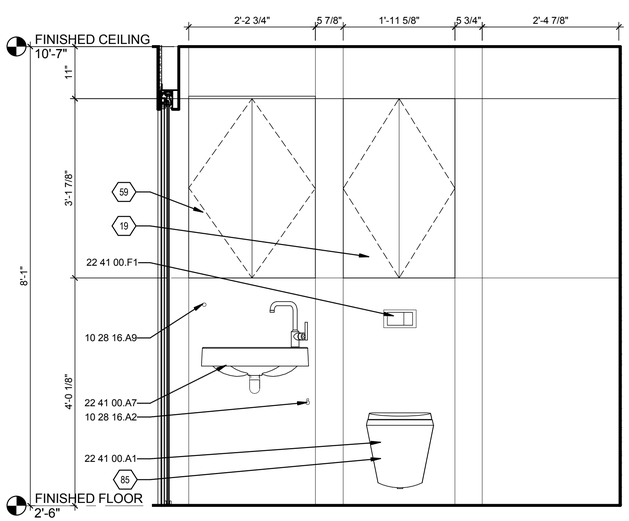


A1 BATHROOM CABINETRY
3/4" = 1'-0"

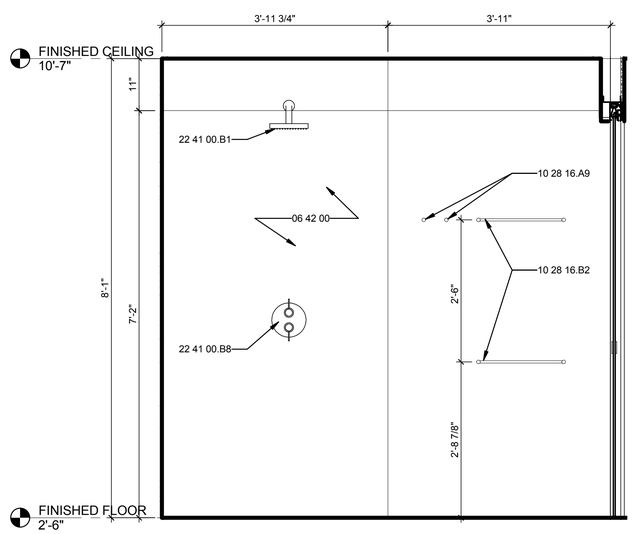


A4 BATHROOM EAST WALL
3/4" = 1'-0"

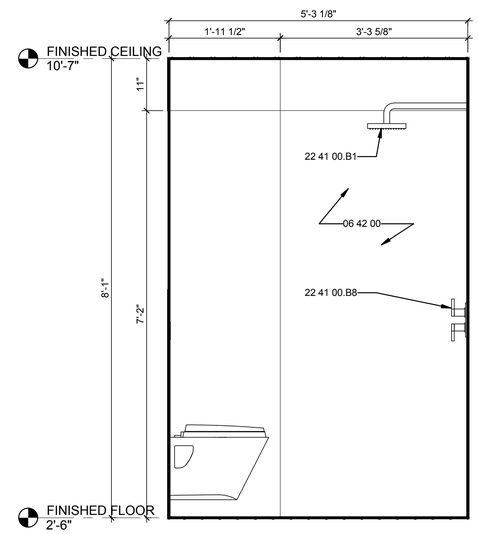


A5 BATHROOM NORTH WALL
3/4" = 1'-0"

## GENERAL SHEET NOTES

## REFERENCE KEYNOTES

| | |
|---|---|
| 06 41 00.A1 | CUSTOM WOOD CASEWORK |
| 06 42 00 | COMPOSITE WOOD PANELING |
| 10 28 16.A2 | TOILET TISSUE DISPENSER |
| 10 28 16.A9 | HANGER |
| 10 28 16.B2 | TOWEL BAR |
| 22 41 00.A1 | WATER CLOSET |
| 22 41 00.A7 | WALL MOUNT SINK |
| 22 41 00.B1 | SHOWER |
| 22 41 00.B8 | SHOWER CONTROL |
| 22 41 00.C1 | WATER CLOSET TANK |
| 22 41 00.F1 | WALL-MOUNTED WATER CLOSET TRIP LEVER |

## SHEET KEYNOTES

| | |
|---|---|
| 19 | CABINETRY DOORS TO BE WATERPROOF WOOD PANEL, ALIGN FLUSH WITH WATERPROOF WOOD PANEL AT WALL. |
| 59 | MIRROR |
| 85 | TOILET NOT PLUMBED DURING COMPETITION |
| 165 | ADJUSTABLE SHELVES |

LIVING LIGHT

| | |
|---|---|
| TEAM NAME: | TENNESSEE |
| ADDRESS: | UNIVERSITY OF TENNESSEE<br>1715 VOLUNTEER BLVD., RM 313<br>KNOXVILLE, TN 37996 |
| CONTACT: | LIVLIGHT@UTK.EDU<br>HTTP://LIVINGLIGHTUTK.COM |

CONSULTANTS

JAMES ROSE ARCHITECT
MALLIA ENGINEERING
ROSS BRYAN ASSOCIATES
RICHARD KELSO
LEON TOLBERT

CLIENT

U.S. DEPARTMENT OF ENERGY
SOLAR DECATHLON 2011
WWW.SOLARDECATHLON.GOV

U.S. DEPARTMENT OF ENERGY SOLAR DECATHLON

| MARK | DATE | DESCRIPTION |
|---|---|---|

| | |
|---|---|
| LOT NUMBER: | 202 |
| DRAWN BY: | JOHN CALVERT |
| CHECKED BY: | JAMES ROSE |
| COPYRIGHT: | NONE: PROJECT IS PUBLIC DOMAIN |

SHEET TITLE

BATHROOM ELEVATIONS

A-403

8/13/2011 10:44:16 AM

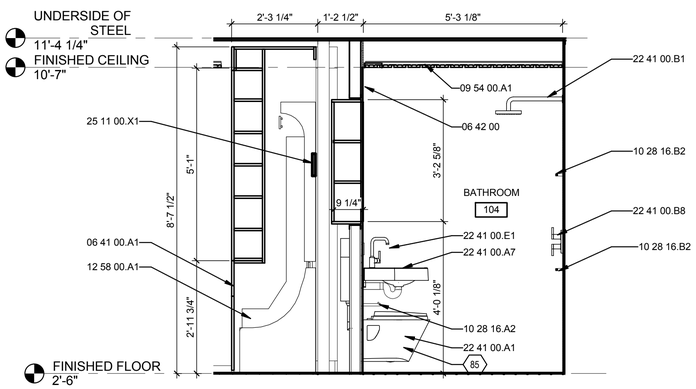


## D1 SECTION THROUGH MURPHY BED AND SINK

1/2" = 1'-0"

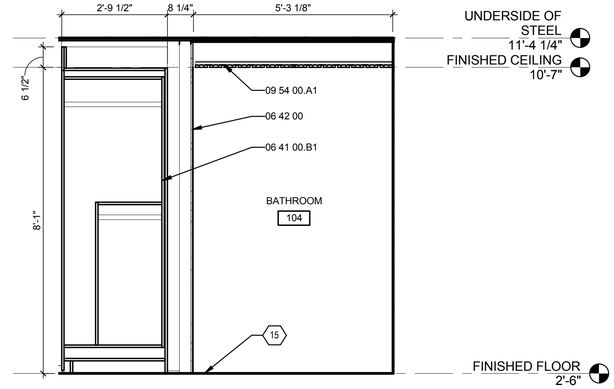


## D4 SECTION THROUGH CLOSET AND SHOWER

1/2" = 1'-0"

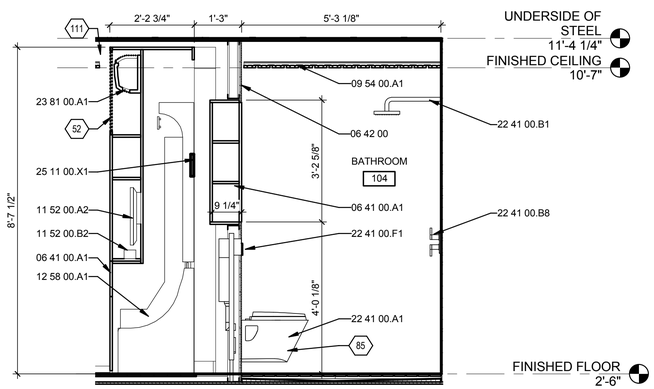


## B3 SECTION THROUGH MURPHY BED AND TOILET

1/2" = 1'-0"

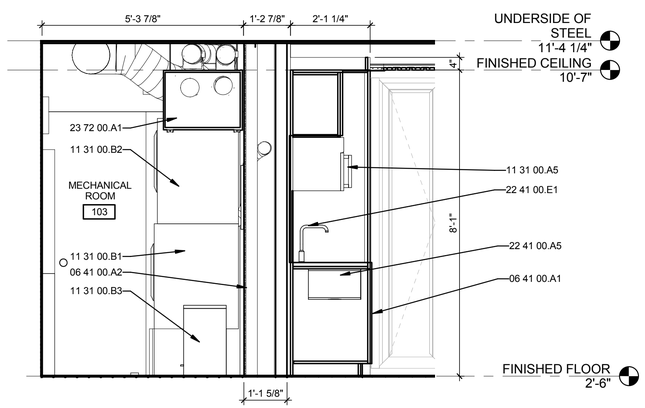


## A1 WEST CORE SECTION THROUGH COUNTER

1/2" = 1'-0"

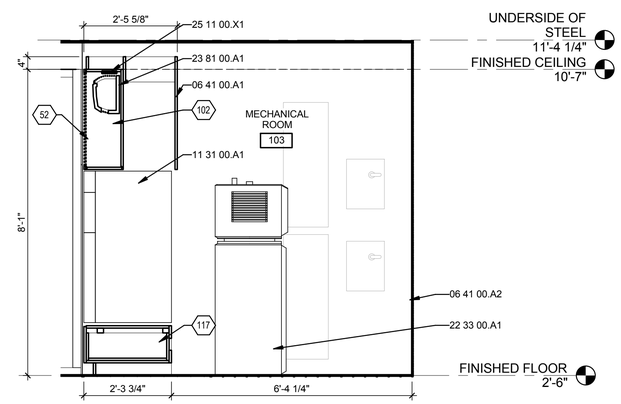


## A4 WEST CORE SECTION THROUGH FRIDGE

1/2" = 1'-0"

# GENERAL SHEET NOTES

1. REFERENCE 'M' SERIES AND 'E' SERIES DRAWINGS FOR MECHANICAL AND ELECTRICAL EQUIPMENT

# REFERENCE KEYNOTES

| | |
|---|---|
| 06 41 00.A1 | CUSTOM WOOD CASEWORK |
| 06 41 00.A2 | 1/4" FINISHED PLYWOOD |
| 06 41 00.B1 | CUSTOM WOOD PULL-OUT CLOSET |
| 06 42 00 | COMPOSITE WOOD PANELING |
| 09 54 00.A1 | SUSPENDED PLANK ACOUSTICAL WOOD CEILING |
| 10 28 16.A2 | TOILET TISSUE DISPENSER |
| 10 28 16.B2 | TOWEL BAR |
| 11 31 00.A1 | REFRIGERATOR |
| 11 31 00.A5 | OVEN |
| 11 31 00.B1 | CLOTHES WASHER |
| 11 31 00.B2 | CLOTHES DRYER |
| 11 31 00.B3 | SPIN DRYER |
| 11 52 00.A2 | TELEVISION, PROVIDED BY OTHERS |
| 11 52 00.B2 | AUDIO SYSTEM, PROVIDED BY OTHERS |
| 12 58 00.A1 | MURPHY BED |
| 22 33 00.A1 | HEAT PUMP ELECTRIC WATER HEATER |
| 22 41 00.A1 | WATER CLOSET |
| 22 41 00.A5 | UNDER COUNTER SINK |
| 22 41 00.A7 | WALL MOUNT SINK |
| 22 41 00.B1 | SHOWER |
| 22 41 00.B8 | SHOWER CONTROL |
| 22 41 00.E1 | FAUCET |
| 22 41 00.F1 | WALL-MOUNTED WATER CLOSET TRIP LEVER |
| 23 72 00.A1 | ENERGY RECOVERY VENTILATOR |
| 23 81 00.A1 | DUCTLESS MINI-SPLIT INDOOR UNIT, PAINT BLACK |
| 25 11 00.X1 | INFRARED EMULATOR |

# SHEET KEYNOTES

| | |
|---|---|
| 15 | INTERIOR DRAINAGE FLOOR, REFERENCE P-501 |
| 52 | ALUMINUM GRILLE, PAINT BLACK. REFERENCE SHEET M-601. PROVIDE WOOD FRAME TO COVER GRILLE FLANGE. ALIGN FACE OF WOOD FRAME WITH SURROUNDING CASEWORK. |
| 85 | TOILET NOT PLUMBED DURING COMPETITION |
| 102 | SHEET METAL AIRFLOW DIVERTER, PAINT BLACK |
| 111 | BLOCK OFF SPACE ABOVE CEILING FROM MINI-SPLIT UNIT AIR INTAKE. REFERENCE A4/M-501. |
| 117 | WOOD DRAWER |

LIVING LIGHT


TEAM NAME: TENNESSEE
ADDRESS: UNIVERSITY OF TENNESSEE
1715 VOLUNTEER BLVD., RM 313
KNOXVILLE, TN 37996
CONTACT: LIVLIGHT@UTK.EDU
HTTP://LIVINGLIGHTUTK.COM

CONSULTANTS
JAMES ROSE ARCHITECT
MALLIA ENGINEERING
ROSS BRYAN ASSOCIATES
RICHARD KELSO
LEON TOLBERT


CLIENT
U.S. DEPARTMENT OF ENERGY
SOLAR DECATHLON 2011
WWW.SOLARDECATHLON.GOV

U.S. DEPARTMENT OF ENERGY SOLAR DECATHLON

| MARK | DATE | DESCRIPTION |
|---|---|---|

| | |
|---|---|
| LOT NUMBER: | 202 |
| DRAWN BY: | LAUREN MCCARTY |
| CHECKED BY: | JAMES ROSE |
| COPYRIGHT: | NONE: PROJECT IS PUBLIC DOMAIN |

SHEET TITLE
CORE SECTIONS

A-404

8/13/2011 10:44:22 AM

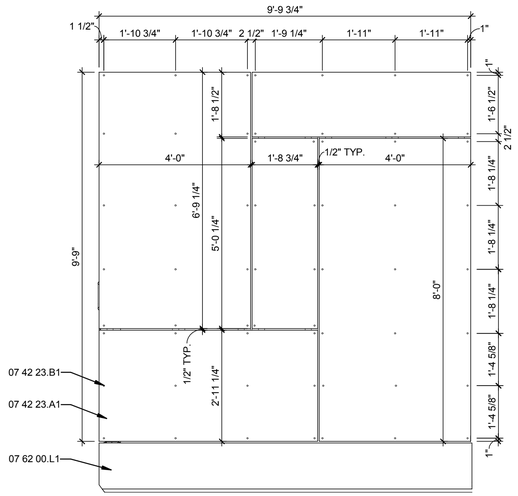


## C1 SOUTH FACADE ASSEMBLY (NORTH SIM)

1/2" = 1'-0"

0 1' 2' 4'

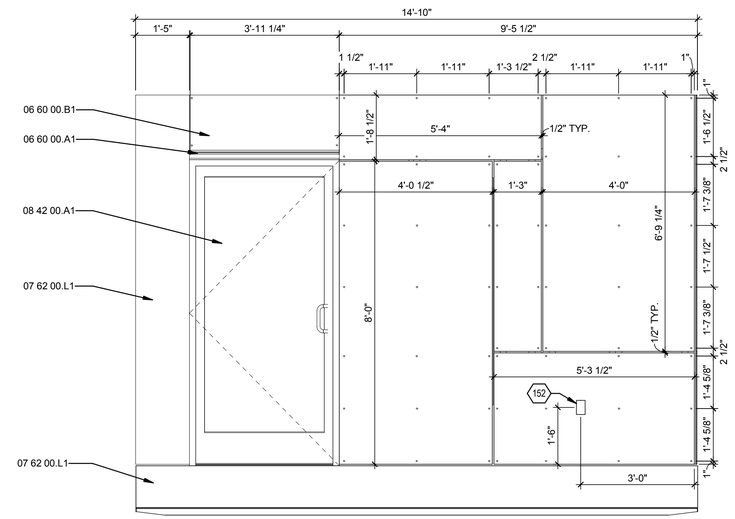


## C4 WEST FACADE ASSEMBLY (EAST SIM)

1/2" = 1'-0"

0 1' 2' 4'

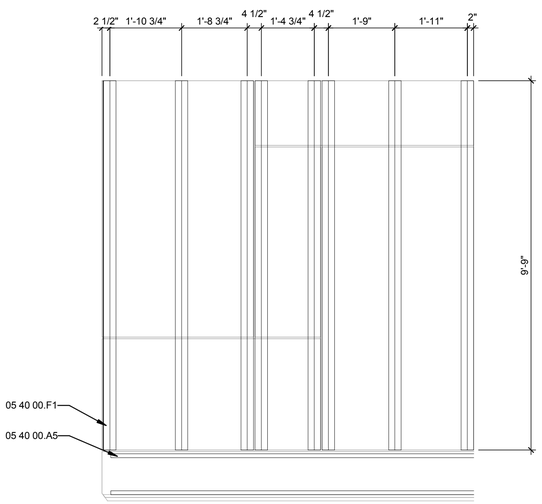


## A1 SOUTH FACADE SUPORTS ELEVATION (NORTH SIM)

1/2" = 1'-0"

0 1' 2' 4'

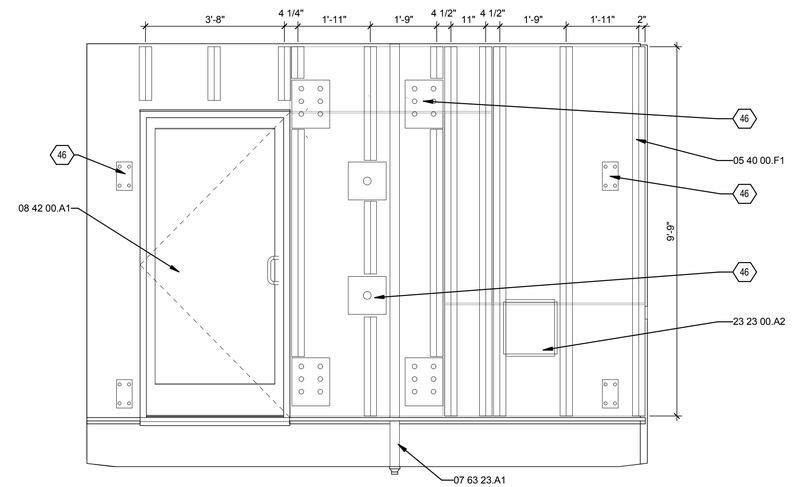


## A4 WEST FACADE SUPPORTS ELEVATION (EAST SIM)

1/2" = 1'-0"

0 1' 2' 4'

## GENERAL SHEET NOTES

## REFERENCE KEYNOTES

| | |
|---|---|
| 05 40 00.A5 | 3-5/8" METAL STUD |
| 05 40 00.F1 | 2" Z-CHANNEL |
| 06 60 00.A1 | 1-1/4" ACRYLIC AWNING, FROSTED |
| 06 60 00.B1 | 1/4" ACRYLIC PANEL, FROSTED |
| 07 42 23.A1 | COMPOSITE WOOD WALL PANELS |
| 07 42 23.B1 | EXPOSED COLOR-MATCH FASTENER |
| 07 62 00.L1 | ALUMINUM PANEL |
| 07 63 23.A1 | CUSTOM 1 3/4" X 3" ALUMINUM DOWNSPOUT |
| 08 42 00.A1 | ENTRANCE |
| 23 23 00.A2 | REFRIGERANT PIPING CONNECTOR BOX |

## SHEET KEYNOTES

| | |
|---|---|
| 46 | STEEL PLATE FOR TRAILER CONNECTION ASSEMBLY, REFERENCE SHEET S-201 |
| 152 | PROVIDE CUT-OUT IN FACADE PANEL TO ALLOW FOR EXTERIOR OUTLET |

LIVING LIGHT


TEAM NAME: TENNESSEE

ADDRESS: UNIVERSITY OF TENNESSEE
1715 VOLUNTEER BLVD., RM 313
KNOXVILLE, TN 37996

CONTACT: LIVLIGHT@UTK.EDU
HTTP://LIVINGLIGHTUTK.COM

CONSULTANTS

JAMES ROSE ARCHITECT

MALLIA ENGINEERING

ROSS BRYAN ASSOCIATES

RICHARD KELSO

LEON TOLBERT


CLIENT

U.S. DEPARTMENT OF ENERGY

SOLAR DECATHLON 2011

WWW.SOLARDECATHLON.GOV

U.S. DEPARTMENT OF ENERGY SOLAR DECATHLON

| MARK | DATE | DESCRIPTION |
|---|---|---|

| | |
|---|---|
| LOT NUMBER: | 202 |
| DRAWN BY: | AMANDA GANN |
| CHECKED BY: | JAMES ROSE |
| COPYRIGHT: | NONE: PROJECT IS PUBLIC DOMAIN |

SHEET TITLE

# ENLARGED CORE EXTERIOR ELEVATIONS

# A-405

8/13/2011 10:44:25 AM

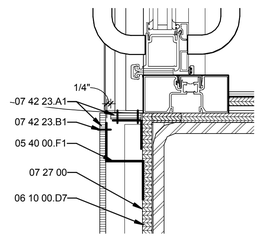


## D1 DOOR JAMB DETAIL

3" = 1'-0"

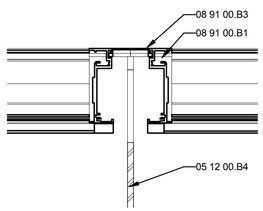


## C1 LOUVER PLAN DETAIL

3" = 1'-0"

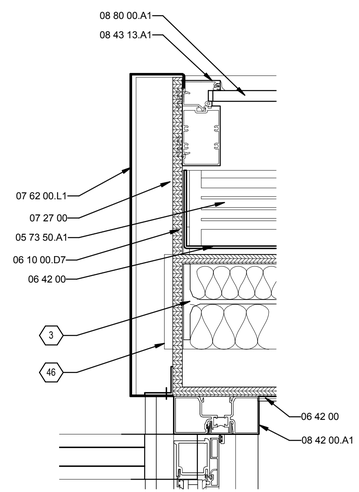


## D3 DETAIL AT ALUMINUM WRAP

3" = 1'-0"

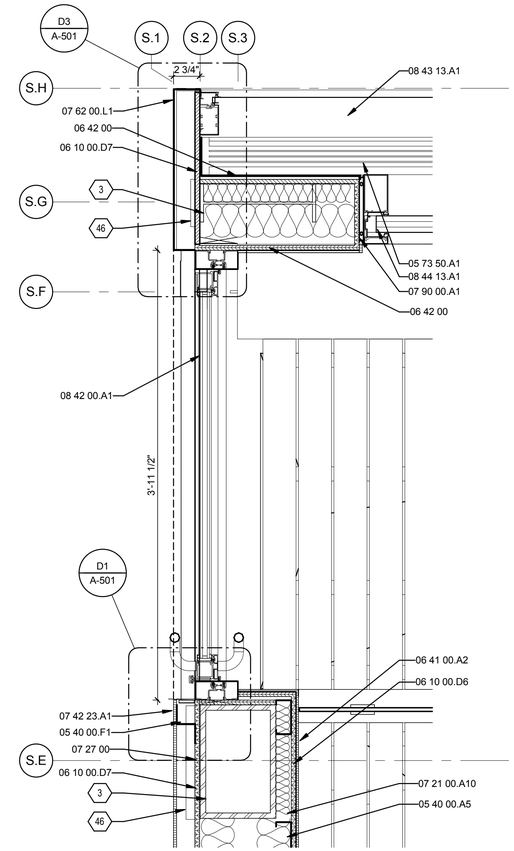


## B5 PLAN DETAIL AT ENTRANCE DOOR

1 1/2" = 1'-0"

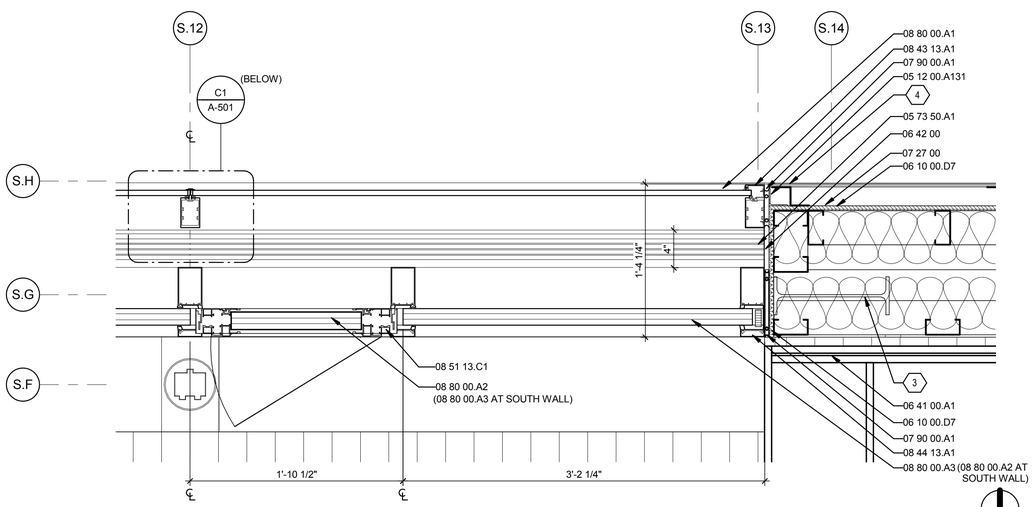


## A1 DOUBLE FACADE JAMB PLAN DETAIL

1 1/2" = 1'-0"

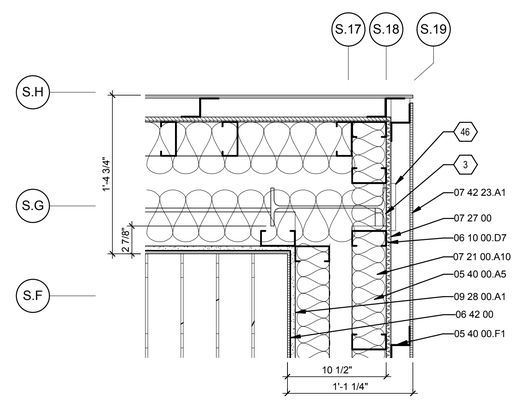


## A5 CORE WALL CORNER PLAN DETAIL

1 1/2" = 1'-0"

## GENERAL SHEET NOTES

## REFERENCE KEYNOTES

| | |
|---|---|
| 05 12 00.A131 | L2X2X0.125 |
| 05 12 00.B4 | 5/16" WELDED STIFFENER PLATE |
| 05 40 00.A5 | 3-5/8" METAL STUD |
| 05 40 00.F1 | 2" Z-CHANNEL |
| 05 73 50.A1 | PERFORATED ALUMINUM GRILLE |
| 06 10 00.D6 | 1/2" PLYWOOD |
| 06 10 00.D7 | 1/2" EXTERIOR GRADE PLYWOOD |
| 06 41 00.A1 | CUSTOM WOOD CASEWORK |
| 06 41 00.A2 | 1/4" FINISHED PLYWOOD |
| 06 42 00 | COMPOSITE WOOD PANELING |
| 07 21 00.A10 | BATT INSULATION |
| 07 27 00 | WATER RESISTIVE WEATHER BARRIER |
| 07 42 23.A1 | COMPOSITE WOOD WALL PANELS |
| 07 42 23.B1 | EXPOSED COLOR-MATCH FASTENER |
| 07 62 00.L1 | ALUMINUM PANEL |
| 07 90 00.A1 | 1/2" SEALANT WITH BACKER ROD |
| 08 42 00.A1 | ENTRANCE |
| 08 43 13.A1 | ALUMINUM-FRAMED STOREFRONT |
| 08 44 13.A1 | GLAZED ALUMINUM CURTAIN WALL |
| 08 51 13.C1 | ALUMINUM CASEMENT WINDOW |
| 08 80 00.A1 | 9/16" SINGLE PANE GLASS |
| 08 80 00.A2 | 2" SUSPENDED FILM GLASS |
| 08 80 00.A3 | 2" SUSPENDED FILM GLASS, TRANSLUSCENT |
| 08 91 00.B1 | 4" FIXED ALUMINUM LOUVER |
| 08 91 00.B3 | LOUVER FLANGE |
| 09 28 00.A1 | CEMENTITIOUS BACKING BOARDS |

## SHEET KEYNOTES

| | |
|---|---|
| 3 | STEEL COLUMN, REFERENCE SHEET S-102 |
| 4 | ALIGN FACE OF PANEL WITH FACE OF STOREFRONT |
| 46 | STEEL PLATE FOR TRAILER CONNECTION ASSEMBLY, REFERENCE SHEET S-201 |

LIVING LIGHT


TEAM NAME: TENNESSEE

ADDRESS: UNIVERSITY OF TENNESSEE
1715 VOLUNTEER BLVD., RM 313
KNOXVILLE, TN 37996

CONTACT: LIVLIGHT@UTK.EDU
HTTP://LIVINGLIGHTUTK.COM

CONSULTANTS

JAMES ROSE ARCHITECT

MALLIA ENGINEERING

ROSS BRYAN ASSOCIATES

RICHARD KELSO

LEON TOLBERT


CLIENT

U.S. DEPARTMENT OF ENERGY

SOLAR DECATHLON 2011

WWW.SOLARDECATHLON.GOV

U.S. DEPARTMENT OF ENERGY SOLAR DECATHLON

| MARK | DATE | DESCRIPTION |
|---|---|---|

| | |
|---|---|
| LOT NUMBER: | 202 |
| DRAWN BY: | MEGAN CHAFIN |
| CHECKED BY: | JAMES ROSE |
| COPYRIGHT: | NONE: PROJECT IS PUBLIC DOMAIN |

SHEET TITLE

PLAN DETAILS

A-501

8/13/2011 10:44:29 AM

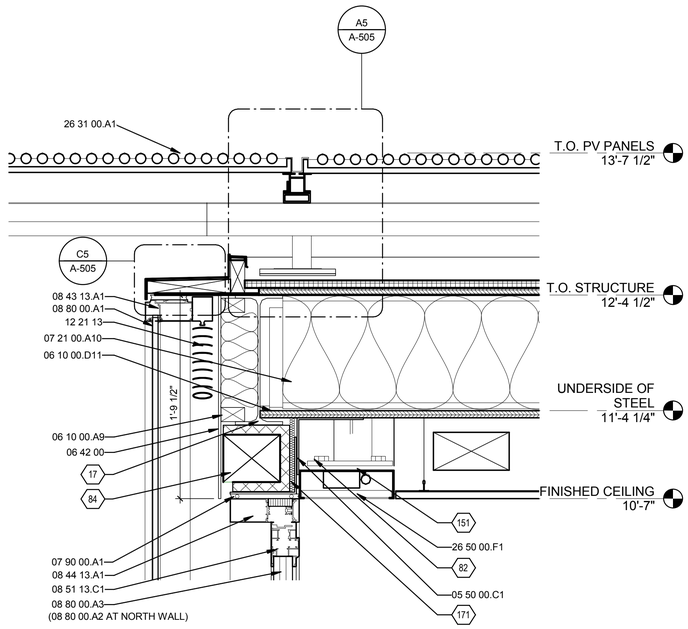


## C1 DOUBLE FACADE HEAD DETAIL AT SOUTH WALL (NORTH WALL SIM.)

1 1/2" = 1'-0"

0 3" 6" 1'

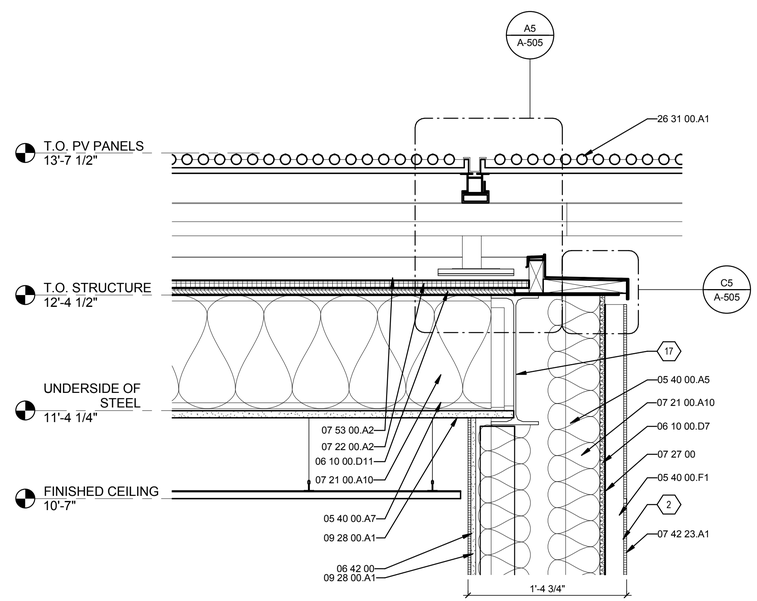


## C4 CORE WALL HEAD DETAIL AT NORTH WALL (SOUTH SIM.)

1 1/2" = 1'-0"

0 3" 6" 1'

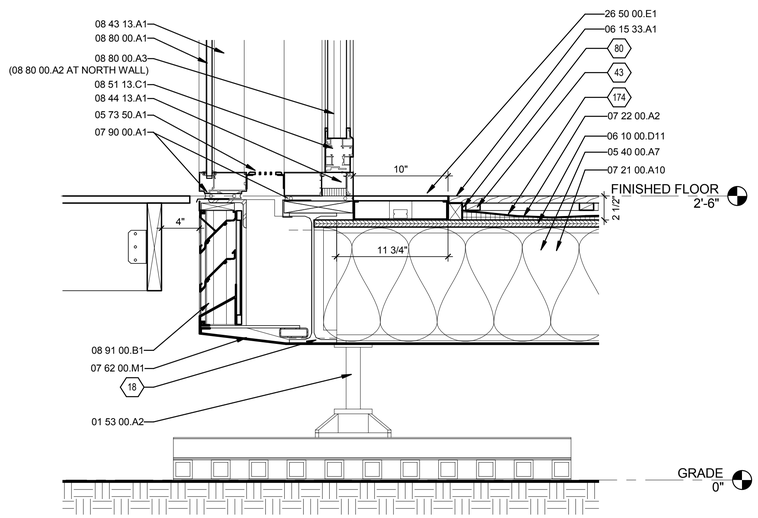


## A1 DOUBLE FACADE SILL DETAIL AT SOUTH WALL (NORTH WALL SIM.)

1 1/2" = 1'-0"

0 3" 6" 1'

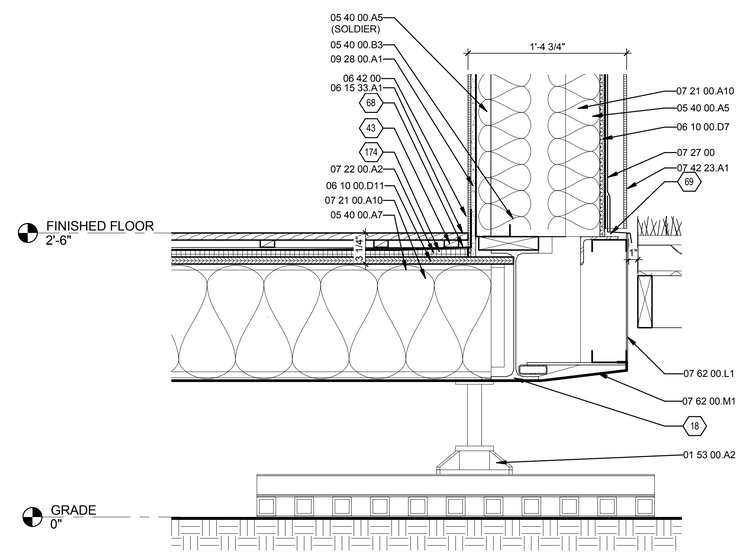


## A4 CORE WALL SILL DETAIL AT NORTH WALL (SOUTH WALL SIM.)

1 1/2" = 1'-0"

0 3" 6" 1'

## GENERAL SHEET NOTES

## REFERENCE KEYNOTES

| | |
|---|---|
| 01 53 00.A2 | ADJUSTABLE BUILDING FOOTING |
| 05 12 00.A5 | HSS4X0.220 CROSS BRACING |
| 05 40 00.A5 | 3-5/8" METAL STUD |
| 05 40 00.A7 | 12" "C" JOIST, 16" O.C. |
| 05 40 00.B3 | 3-5/8" CHANNEL STUD |
| 05 40 00.F1 | 2" Z-CHANNEL |
| 05 50 00.C1 | 12" LONG WELDED Z-CLIP COMPOSED OF TWO 6" X 7" X 3/16" STEEL ANGLES, 30" O.C. |
| 05 73 50.A1 | PERFORATED ALUMINUM GRILLE |
| 06 10 00.A9 | PRESSURE TREATED BLOCKING |
| 06 10 00.D7 | 1/2" EXTERIOR GRADE PLYWOOD |
| 06 10 00.D11 | 3/4" PLYWOOD |
| 06 15 33.A1 | 1 X 4 WOOD DECKING |
| 06 42 00 | COMPOSITE WOOD PANELING |
| 07 21 00.A10 | BATT INSULATION |
| 07 22 00.A2 | TAPERED RIGID INSULATION |
| 07 27 00 | WATER RESISTIVE WEATHER BARRIER |
| 07 42 23.A1 | COMPOSITE WOOD WALL PANELS |
| 07 53 00.A2 | EPDM ROOFING |
| 07 62 00.L1 | ALUMINUM PANEL |
| 07 62 00.M1 | SHEET METAL BELLY PAN |
| 07 90 00.A1 | 1/2" SEALANT WITH BACKER ROD |
| 08 43 13.A1 | ALUMINUM-FRAMED STOREFRONT |
| 08 44 13.A1 | GLAZED ALUMINUM CURTAIN WALL |
| 08 51 13.C1 | ALUMINUM CASEMENT WINDOW |
| 08 80 00.A1 | 9/16" SINGLE PANE GLASS |
| 08 80 00.A3 | 2" SUSPENDED FILM GLASS, TRANSLUSCENT |
| 08 91 00.B1 | 4" FIXED ALUMINUM LOUVER |
| 09 28 00.A1 | CEMENTITIOUS BACKING BOARDS |
| 12 21 13 | HORIZONTAL LOUVER BLINDS |
| 26 31 00.A1 | PHOTOVOLTAIC COLLECTORS |
| 26 50 00.E1 | 4' COLOR CHANGE LED LAMP IN 10" WIDE CUSTOM ALUMINUM CHANNEL WITH 1/2" FROSTED TEMPERED GLASS COVER |
| 26 50 00.F1 | 4' TUBULAR FLUORESCENT LAMP IN 10" WIDE CUSTOM ALUMINUM CHANNEL WITH LOUVER BAFFLE |

## SHEET KEYNOTES

| | |
|---|---|
| 2 | WOOD FACADE PANELS ATTACHED ON 2" VERTICAL Z-CHANNEL SUPPORTS. REFERENCE A-404 FOR SUPPORT LOCATIONS |
| 17 | STEEL BEAM, REFERENCE SHEET S-103 |
| 18 | STEEL BEAM, REFERENCE SHEET S-102 |
| 43 | 1 X 2 CYPRESS STRINGER, WATERPROOFED, 12" O.C. PROVIDE SLOPED SHIMMING AS NEEDED AT TAPERED INSULATION. NOTCH TO ALLOW FOR WATER TO FLOW TO FLOOR DRAIN. |
| 68 | WATERPROOF MEMBRANE - TURN UP COUNTERFLASHING 6" BEHIND WALL FINISH |
| 69 | FLASHING, TURN UP 6" BEHIND AIR BARRIER |
| 80 | WATERPROOF MEMBRANE, WRAP OVER TOP OF CURB |
| 82 | BLOCKING FOR LIGHT TROUGH, BEYOND |
| 84 | INSULATED DUCT WITH VARIABLE SLOTTED OPENING, REFERENCE MECHANICAL FOR DUCT SIZE. SIZE OF OPENINGS TO BE COORDINATED WITH PROJECT ENGINEER. |
| 151 | BLOCK AS NEEDED TO SUPPORT LIGHT TROUGH |
| 171 | PROVIDE ADDITIONAL INSULATION ABOVE DUCT AND AT STEEL SUPPORT ANGLES |
| 174 | TAPERED INSULATION TO SLOPE TO FLOOR DRAINS |

LIVING LIGHT


TEAM NAME: TENNESSEE

ADDRESS: UNIVERSITY OF TENNESSEE
1715 VOLUNTEER BLVD., RM 313
KNOXVILLE, TN 37996

CONTACT: LIVLIGHT@UTK.EDU
HTTP://LIVINGLIGHTUTK.COM

CONSULTANTS

JAMES ROSE ARCHITECT

MALLIA ENGINEERING

ROSS BRYAN ASSOCIATES

RICHARD KELSO

LEON TOLBERT


CLIENT

U.S. DEPARTMENT OF ENERGY

SOLAR DECATHLON 2011

WWW.SOLARDECATHLON.GOV

U.S. DEPARTMENT OF ENERGY SOLAR DECATHLON

| MARK | DATE | DESCRIPTION |
|---|---|---|

| | |
|---|---|
| LOT NUMBER: | 202 |
| DRAWN BY: | KATIE BURKE |
| CHECKED BY: | JAMES ROSE |
| COPYRIGHT: | NONE: PROJECT IS PUBLIC DOMAIN |

SHEET TITLE

WALL DETAILS

A-502

8/13/2011 10:44:36 AM

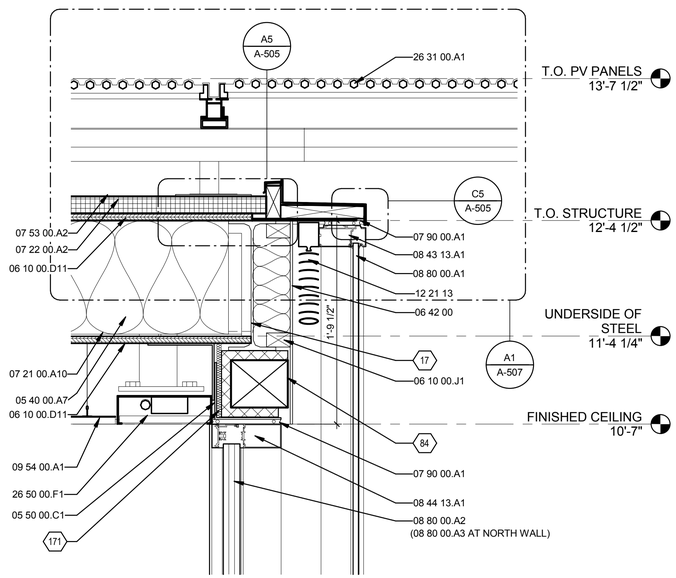


## C1 DOUBLE FACADE HEAD DETAIL AT SOUTH WALL (NORTH HEAD SIM.)

1 1/2" = 1'-0"

0 3" 6" 1'

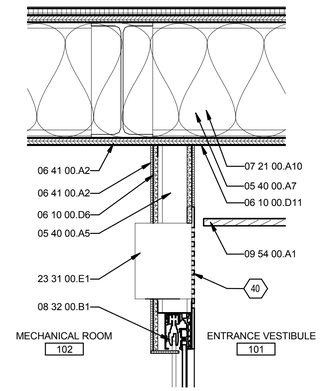


## D3 MECH. ROOM DOOR HEAD DETAIL

1 1/2" = 1'-0"

0 3" 6" 1'

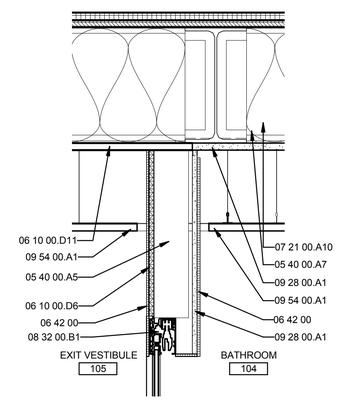


## B3 BATHROOM DOOR HEAD DETAIL

1 1/2" = 1'-0"

0 3" 6" 1'

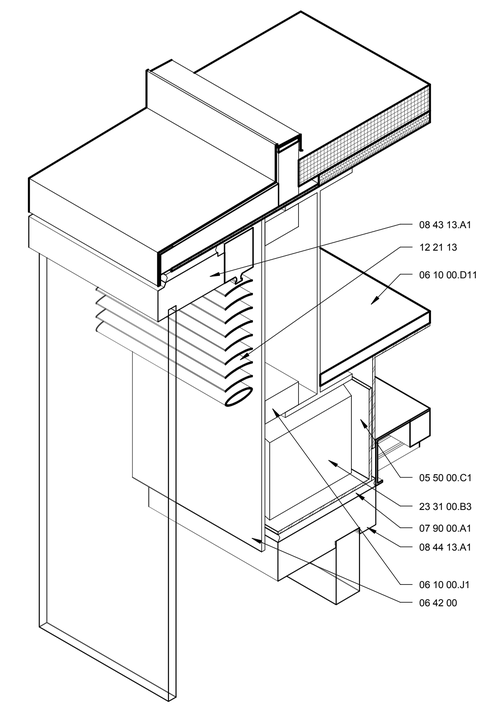


## A5 DOUBLE FACADE HEAD AXON

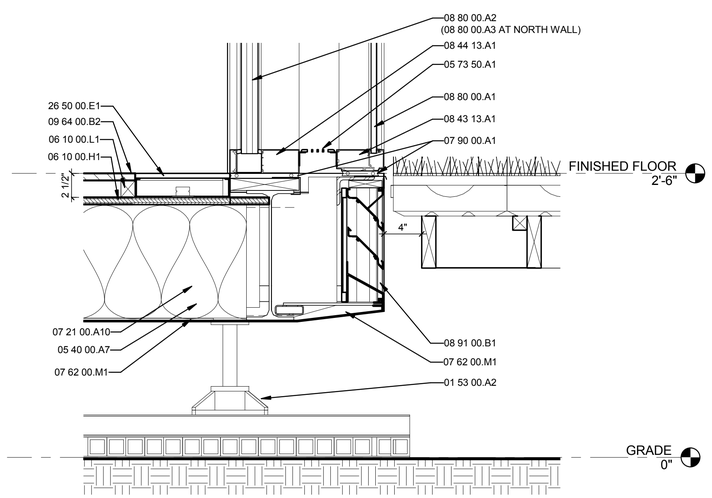


## A1 DOUBLE FACADE SILL DETAIL AT SOUTH WALL (NORTH SILL SIM.)

1 1/2" = 1'-0"

0 3" 6" 1'

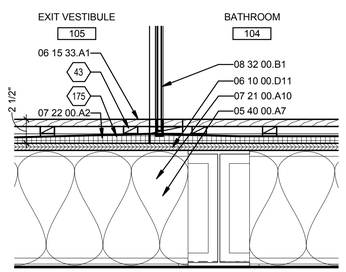


## A3 INTERIOR DOOR SILL DETAIL

1 1/2" = 1'-0"

0 3" 6" 1'

## GENERAL SHEET NOTES

## REFERENCE KEYNOTES

| | |
|---|---|
| 01 53 00.A2 | ADJUSTABLE BUILDING FOOTING |
| 05 40 00.A5 | 3-5/8" METAL STUD |
| 05 40 00.A7 | 12" "C" JOIST, 16" O.C. |
| 05 50 00.C1 | 12" LONG WELDED Z-CLIP COMPOSED OF TWO 6" X 7" X 3/16" STEEL ANGLES, 30" O.C. |
| 05 73 50.A1 | PERFORATED ALUMINUM GRILLE |
| 06 10 00.D6 | 1/2" PLYWOOD |
| 06 10 00.D11 | 3/4" PLYWOOD |
| 06 10 00.H1 | 2X10 TREATED WOOD FRAMING |
| 06 10 00.J1 | BLOCKING |
| 06 10 00.L1 | 2X WOOD SLEEPER, 12" O.C. |
| 06 15 33.A1 | 1 X 4 WOOD DECKING |
| 06 41 00.A2 | 1/4" FINISHED PLYWOOD |
| 06 42 00 | COMPOSITE WOOD PANELING |
| 07 21 00.A10 | BATT INSULATION |
| 07 22 00.A2 | TAPERED RIGID INSULATION |
| 07 53 00.A2 | EPDM ROOFING |
| 07 62 00.M1 | SHEET METAL BELLY PAN |
| 07 90 00.A1 | 1/2" SEALANT WITH BACKER ROD |
| 08 32 00.B1 | SLIDING ALUMINUM-FRAMED GLASS DOOR |
| 08 43 13.A1 | ALUMINUM-FRAMED STOREFRONT |
| 08 44 13.A1 | GLAZED ALUMINUM CURTAIN WALL |
| 08 80 00.A1 | 9/16" SINGLE PANE GLASS |
| 08 80 00.A2 | 2" SUSPENDED FILM GLASS |
| 08 91 00.B1 | 4" FIXED ALUMINUM LOUVER |
| 09 28 00.A1 | CEMENTITIOUS BACKING BOARDS |
| 09 54 00.A1 | SUSPENDED PLANK ACOUSTICAL WOOD CEILING |
| 09 64 00.B2 | 3/4" HARDWOOD FLOORING |
| 12 21 13 | HORIZONTAL LOUVER BLINDS |
| 23 31 00.E1 | 8" HIGH X 6" WIDE X 30" LONG SHEET METAL PLENUM |
| 26 31 00.A1 | PHOTOVOLTAIC COLLECTORS |
| 26 50 00.E1 | 4' COLOR CHANGE LED LAMP IN 10" WIDE CUSTOM ALUMINUM CHANNEL WITH 1/2" FROSTED TEMPERED GLASS COVER |
| 26 50 00.F1 | 4' TUBULAR FLUORESCENT LAMP IN 10" WIDE CUSTOM ALUMINUM CHANNEL WITH LOUVER BAFFLE |

## SHEET KEYNOTES

| | |
|---|---|
| 17 | STEEL BEAM, REFERENCE SHEET S-103 |
| 40 | PERFORATED WOOD PANEL GRILLE, PROVIDED BY OWNER |
| 43 | 1 X 2 CYPRESS STRINGER, WATERPROOFED, 12" O.C. PROVIDE SLOPED SHIMMING AS NEEDED AT TAPERED INSULATION. NOTCH TO ALLOW FOR WATER TO FLOW TO FLOOR DRAIN. |
| 84 | INSULATED DUCT WITH VARIABLE SLOTTED OPENING, REFERENCE MECHANICAL FOR DUCT SIZE. SIZE OF OPENINGS TO BE COORDINATED WITH PROJECT ENGINEER. |
| 171 | PROVIDE ADDITIONAL INSULATION ABOVE DUCT AND AT STEEL SUPPORT ANGLES |
| 175 | PROVIDE 3/4" WOOD NOSING AT FACE OF COUNTERTOP |

LIVING LIGHT


| | |
|---|---|
| TEAM NAME: | TENNESSEE |
| ADDRESS: | UNIVERSITY OF TENNESSEE<br>1715 VOLUNTEER BLVD., RM 313<br>KNOXVILLE, TN 37996 |
| CONTACT: | LIVLIGHT@UTK.EDU<br>HTTP://LIVINGLIGHTUTK.COM |

CONSULTANTS

JAMES ROSE ARCHITECT

MALLIA ENGINEERING

ROSS BRYAN ASSOCIATES

RICHARD KELSO

LEON TOLBERT


CLIENT

U.S. DEPARTMENT OF ENERGY

SOLAR DECATHLON 2011

WWW.SOLARDECATHLON.GOV

U.S. DEPARTMENT OF ENERGY SOLAR DECATHLON

| MARK | DATE | DESCRIPTION |
|---|---|---|

| | |
|---|---|
| LOT NUMBER: | 202 |
| DRAWN BY: | KATIE BURKE |
| CHECKED BY: | JAMES ROSE |
| COPYRIGHT: | NONE: PROJECT IS PUBLIC DOMAIN |

SHEET TITLE

# WALL DETAILS

# A-503

8/13/2011 10:44:41 AM

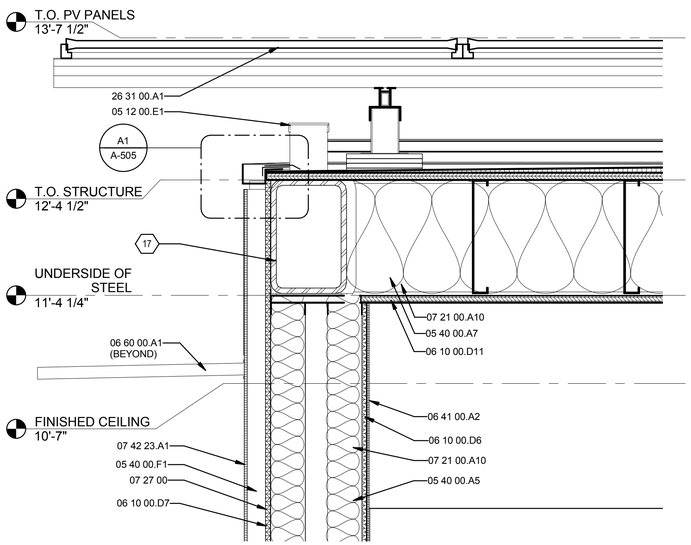


## C1 WEST CORE WALL HEAD DETAIL (EAST SIM.)

1 1/2" = 1'-0"

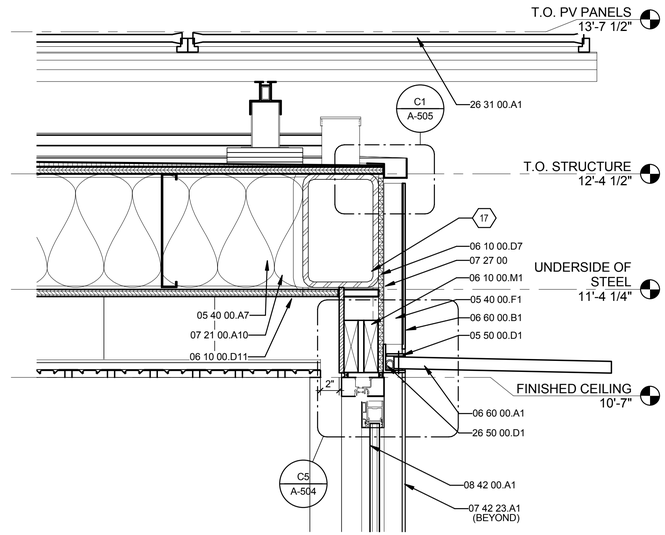


## C3 HEAD DETAIL AT ENTRANCE

1 1/2" = 1'-0"

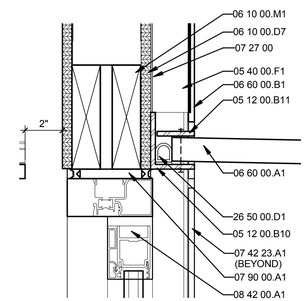


## C5 AWNING SUPPORT DETAIL

3" = 1'-0"

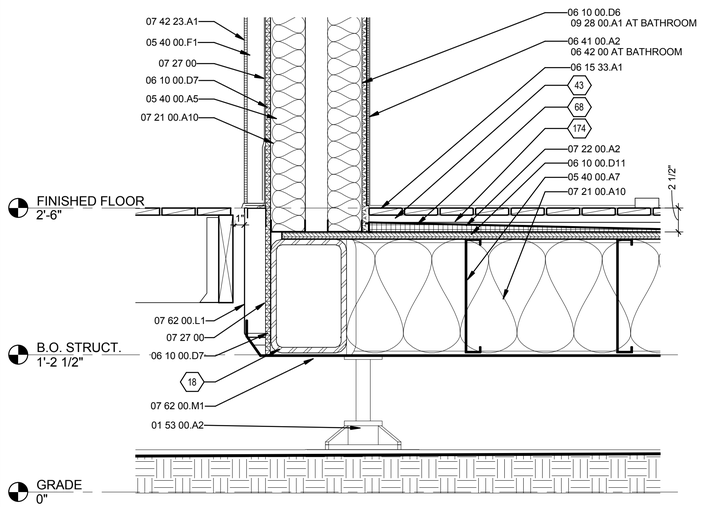


## A1 WEST CORE WALL SILL DETAIL (EAST SIM.)

1 1/2" = 1'-0"

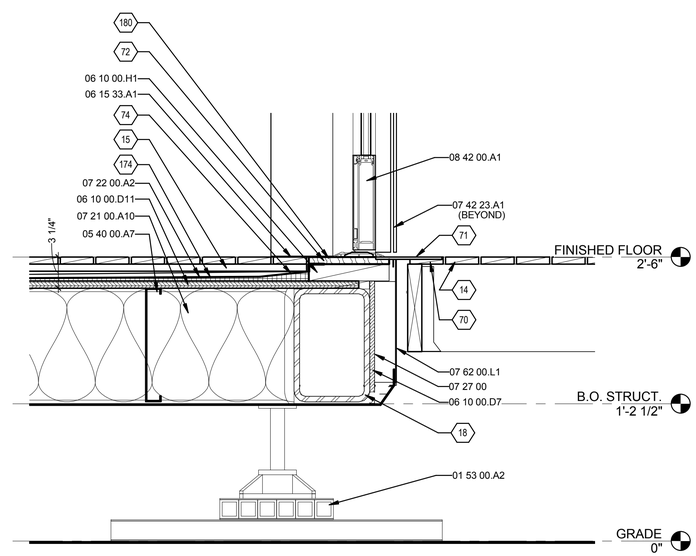


## A3 SILL DETAIL AT ENTRANCE

1 1/2" = 1'-0"

## GENERAL SHEET NOTES

## REFERENCE KEYNOTES

| | |
|---|---|
| 01 53 00.A2 | ADJUSTABLE BUILDING FOOTING |
| 05 12 00.B10 | 3" X 2 1/4" X 1/4" STEEL ANGLE |
| 05 12 00.B11 | 2" X 1/4" FUR BAR |
| 05 12 00.E1 | ROOF ANCHOR WELDED TO STEEL BEAM BELOW. REFERENCE C1/S-301 FOR DETAIL. |
| 05 40 00.A5 | 3-5/8" METAL STUD |
| 05 40 00.A7 | 12" "C" JOIST, 16" O.C. |
| 05 40 00.F1 | 2" Z-CHANNEL |
| 05 50 00.D1 | STEEL ANGLE AND FUR BAR CANOPY ATTACHMENT |
| 06 10 00.D6 | 1/2" PLYWOOD |
| 06 10 00.D7 | 1/2" EXTERIOR GRADE PLYWOOD |
| 06 10 00.D11 | 3/4" PLYWOOD |
| 06 10 00.H1 | 2X10 TREATED WOOD FRAMING |
| 06 10 00.M1 | 2 X 6 WOOD DOOR HEADER |
| 06 15 33.A1 | 1 X 4 WOOD DECKING |
| 06 41 00.A2 | 1/4" FINISHED PLYWOOD |
| 06 60 00.A1 | 1-1/4" ACRYLIC AWNING, FROSTED |
| 06 60 00.B1 | 1/4" ACRYLIC PANEL, FROSTED |
| 07 21 00.A10 | BATT INSULATION |
| 07 22 00.A2 | TAPERED RIGID INSULATION |
| 07 27 00 | WATER RESISTIVE WEATHER BARRIER |
| 07 42 23.A1 | COMPOSITE WOOD WALL PANELS |
| 07 62 00.L1 | ALUMINUM PANEL |
| 07 62 00.M1 | SHEET METAL BELLY PAN |
| 07 90 00.A1 | 1/2" SEALANT WITH BACKER ROD |
| 08 42 00.A1 | ENTRANCE |
| 26 31 00.A1 | PHOTOVOLTAIC COLLECTORS |
| 26 50 00.D1 | LED LIGHT STRIP INTEGRATED INTO AWNING |

## SHEET KEYNOTES

| | |
|---|---|
| 14 | WOOD DECK, REFERENCE SHEET L-101 |
| 15 | INTERIOR DRAINAGE FLOOR, REFERENCE P-501 |
| 17 | STEEL BEAM, REFERENCE SHEET S-103 |
| 18 | STEEL BEAM, REFERENCE SHEET S-102 |
| 43 | 1 X 2 CYPRESS STRINGER, WATERPROOFED, 12" O.C. PROVIDE SLOPED SHIMMING AS NEEDED AT TAPERED INSULATION. NOTCH TO ALLOW FOR WATER TO FLOW TO FLOOR DRAIN. |
| 68 | WATERPROOF MEMBRANE - TURN UP COUNTERFLASHING 6" BEHIND WALL FINISH |
| 70 | PLANE DOWN TO ACCEPT FLUSH SILL EXTENSION |
| 71 | ALUMINUM SILL EXTENSION, AFFIX ON DECK, ALLOW TO SLIDE UNDER ALUMINUM DOOR THRESHOLD |
| 72 | CYPRESS DOOR SILL, RABBET TO ALLOW SILL EXTENSION TO PASS UNDER ALUMINUM THRESHOLD |
| 74 | TERMINATE WATERPROOF MEMBRANE ON TOP OF PRESSURE TREATED BLOCKING |
| 81 | BLOCKING FOR CANOPY SUPPORT |
| 174 | TAPERED INSULATION TO SLOPE TO FLOOR DRAINS |
| 180 | PROVIDE METAL PLATE AT DOOR THRESHOLD. ALIGN WITH INTERIOR FACE OF WALL. |

LIVING LIGHT


TEAM NAME: TENNESSEE

ADDRESS: UNIVERSITY OF TENNESSEE
1715 VOLUNTEER BLVD., RM 313
KNOXVILLE, TN 37996

CONTACT: LIVLIGHT@UTK.EDU
HTTP://LIVINGLIGHTUTK.COM

CONSULTANTS

JAMES ROSE ARCHITECT
MALLIA ENGINEERING
ROSS BRYAN ASSOCIATES
RICHARD KELSO
LEON TOLBERT


CLIENT

U.S. DEPARTMENT OF ENERGY
SOLAR DECATHLON 2011
WWW.SOLARDECATHLON.GOV

U.S. DEPARTMENT OF ENERGY SOLAR DECATHLON

| MARK | DATE | DESCRIPTION |
|---|---|---|

| | |
|---|---|
| LOT NUMBER: | 202 |
| DRAWN BY: | KATIE BURKE |
| CHECKED BY: | JAMES ROSE |
| COPYRIGHT: | NONE: PROJECT IS PUBLIC DOMAIN |

SHEET TITLE

WALL DETAILS

A-504

8/13/2011 10:44:48 AM

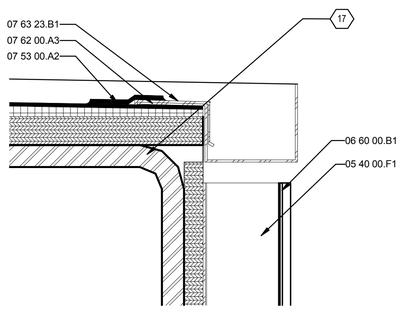


C1 FLASHING DETAIL ABOVE ENTRANCE
6" = 1'-0"

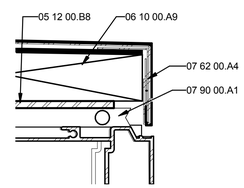


C5 FLASHING DETAIL AT ROOF EDGE
6" = 1'-0"

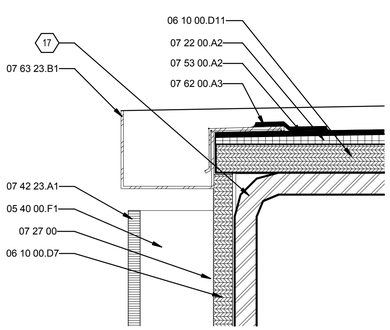


A1 FLASHING DETAIL ABOVE FACADE
6" = 1'-0"

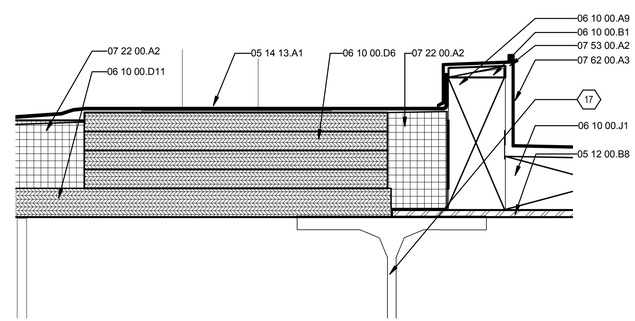


A5 FLASHING DETAIL AT ROOF FOOTING
6" = 1'-0"

## GENERAL SHEET NOTES

## REFERENCE KEYNOTES

| | |
|---|---|
| 05 12 00.B8 | PLATE 1/4" X 11" X CONT. |
| 05 14 13.A1 | PV RACK FOOT |
| 05 40 00.F1 | 2" Z-CHANNEL |
| 06 10 00.A9 | PRESSURE TREATED BLOCKING |
| 06 10 00.B1 | SHIM AS REQUIRED |
| 06 10 00.D6 | 1/2" PLYWOOD |
| 06 10 00.D7 | 1/2" EXTERIOR GRADE PLYWOOD |
| 06 10 00.D11 | 3/4" PLYWOOD |
| 06 10 00.J1 | BLOCKING |
| 06 60 00.B1 | 1/4" ACRYLIC PANEL, FROSTED |
| 07 22 00.A2 | TAPERED RIGID INSULATION |
| 07 27 00 | WATER RESISTIVE WEATHER BARRIER |
| 07 42 23.A1 | COMPOSITE WOOD WALL PANELS |
| 07 53 00.A2 | EPDM ROOFING |
| 07 62 00.A3 | ALUMINUM FLASHING, 20 GA. |
| 07 62 00.A4 | ALUMINUM COUNTER FLASHING, 20 GA. |
| 07 62 00.A5 | ALUMINUM CONTINUOUS CLEAT, 20 GA. |
| 07 63 23.B1 | ALUMINUM GUTTER |
| 07 90 00.A1 | 1/2" SEALANT WITH BACKER ROD |

## SHEET KEYNOTES

| | |
|---|---|
| 17 | STEEL BEAM, REFERENCE SHEET S-103 |

LIVING LIGHT


TEAM NAME: TENNESSEE
ADDRESS: UNIVERSITY OF TENNESSEE
1715 VOLUNTEER BLVD., RM 313
KNOXVILLE, TN 37996
CONTACT: LIVLIGHT@UTK.EDU
HTTP://LIVINGLIGHTUTK.COM


CONSULTANTS

JAMES ROSE ARCHITECT
MALLIA ENGINEERING
ROSS BRYAN ASSOCIATES
RICHARD KELSO
LEON TOLBERT

CLIENT

U.S. DEPARTMENT OF ENERGY
SOLAR DECATHLON 2011
WWW.SOLARDECATHLON.GOV

U.S. DEPARTMENT OF ENERGY SOLAR DECATHLON

| MARK | DATE | DESCRIPTION |
|---|---|---|

| | |
|---|---|
| LOT NUMBER: | 202 |
| DRAWN BY: | JOHN HAND |
| CHECKED BY: | JAMES ROSE |
| COPYRIGHT: | NONE: PROJECT IS PUBLIC DOMAIN |

SHEET TITLE

FLASHING DETAILS

A-505

8/13/2011 10:44:51 AM

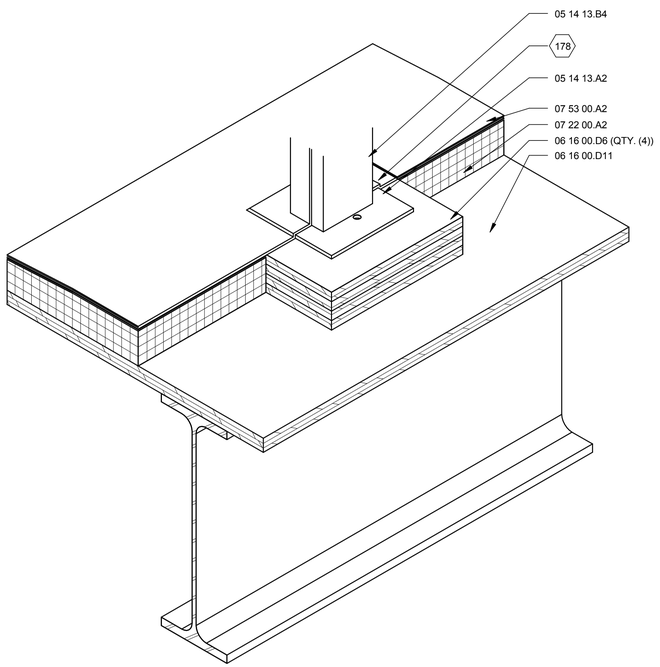


A1 PV RACK FOOTING AXON
3" = 1'-0"

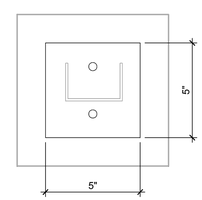


B5 BASE PLATE PLAN
3" = 1'-0"

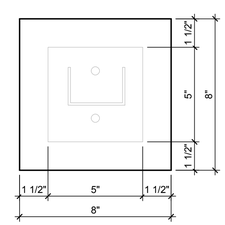


A5 FLASHING PLAN
3" = 1'-0"

## GENERAL SHEET NOTES

1. PROVIDE SIMILAR FLASHING DETAIL AT ROOF ANCHOR POINTS. REFERENCE A1/S-103 FOR LOCATIONS.

## REFERENCE KEYNOTES

| | |
|---|---|
| 05 14 13.A2 | ROOF RACK BASE PLATE |
| 05 14 13.B4 | TOUGH TRAC VERTICAL ARM |
| 06 10 00.D6 | 1/2" PLYWOOD |
| 06 10 00.D11 | 3/4" PLYWOOD |
| 07 22 00.A2 | TAPPERED RIGID INSULATION |
| 07 53 00.A2 | EPDM |

## SHEET KEYNOTES

178 ROOF MEMBRANE TO WRAP OVER ROOF RACK FOOTING AND UP VERTICAL ARM. SLOPE MEMBRANE AWAY FROM FOOTING ON ALL SIDES.

LIVING LIGHT


TEAM NAME: TENNESSEE

ADDRESS: UNIVERSITY OF TENNESSEE
1715 VOLUNTEER BLVD., RM 313
KNOXVILLE, TN 37996

CONTACT: LIVLIGHT@UTK.EDU
HTTP://LIVINGLIGHTUTK.COM

CONSULTANTS

JAMES ROSE ARCHITECT
MALLIA ENGINEERING
ROSS BRYAN ASSOCIATES
RICHARD KELSO
LEON TOLBERT


CLIENT
U.S. DEPARTMENT OF ENERGY
SOLAR DECATHLON 2011
WWW.SOLARDECATHLON.GOV

U.S. DEPARTMENT OF ENERGY SOLAR DECATHLON

| MARK | DATE | DESCRIPTION |
|---|---|---|

| | |
|---|---|
| LOT NUMBER: | 202 |
| DRAWN BY: | JOHN HAND |
| CHECKED BY: | JAMES ROSE |
| COPYRIGHT: | NONE: PROJECT IS PUBLIC DOMAIN |

SHEET TITLE

# PHOTOVOLTAIC RACK FOOTING DETAILS

# A-506

8/13/2011 10:44:54 AM

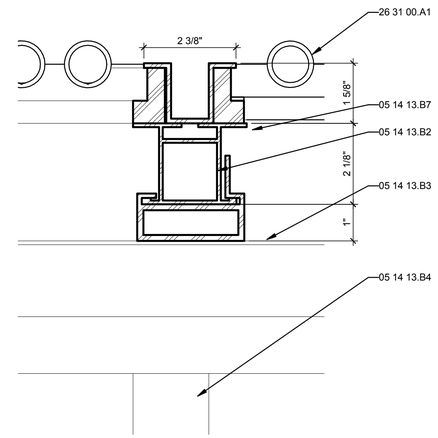


D5 STANDARD RAIL SECTION
6" = 1'-0"
0 1' 2' 3'

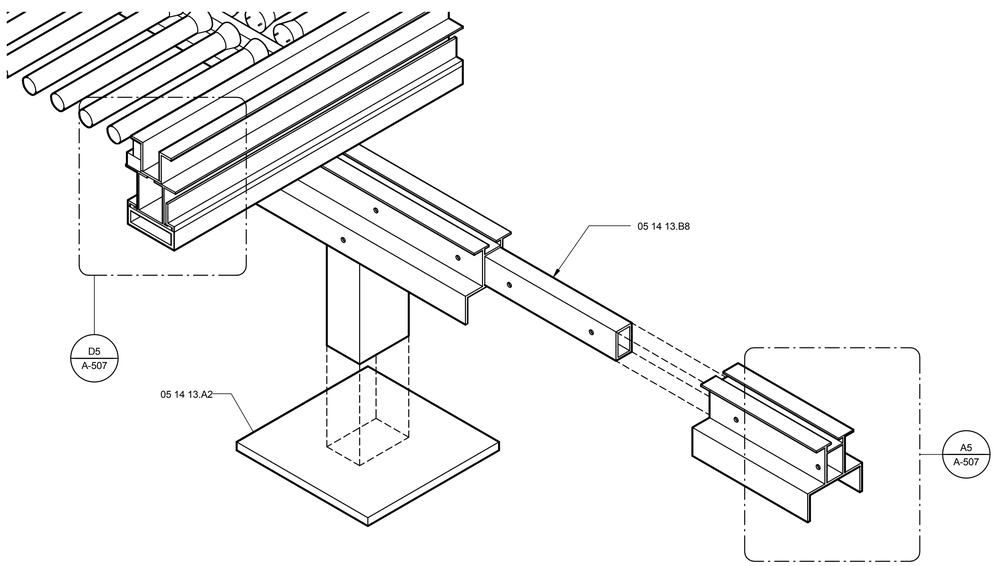


A1 EXPLODED PHOTOVOLTAIC ROOF RACK AXONOMETRIC
3" = 1'-0"
0 1' 2' 3'

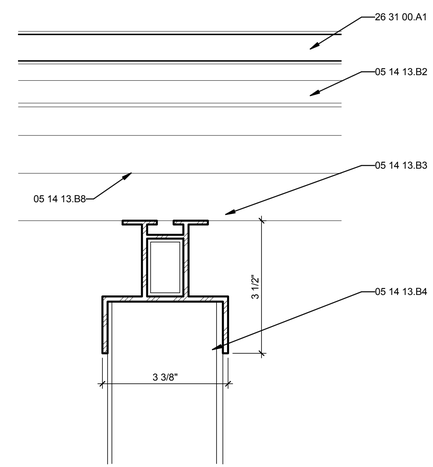


A5 POWER ARM RAIL SECTION
6" = 1'-0"
0 1' 2' 3'

## GENERAL SHEET NOTES

## REFERENCE KEYNOTES

| | |
|---|---|
| 05 14 13.A2 | ROOF RACK BASE PLATE |
| 05 14 13.B2 | STANDARD RAIL |
| 05 14 13.B3 | POWER ARM |
| 05 14 13.B4 | VERTICAL ARM |
| 05 14 13.B7 | SLIDE MOUNT |
| 05 14 13.B8 | SLIDE BRACE |
| 05 14 13.B9 | CLAMP |
| 26 31 00.A1 | PHOTOVOLTAIC COLLECTORS |

## SHEET KEYNOTES

LIVING LIGHT


TEAM NAME: TENNESSEE
ADDRESS: UNIVERSITY OF TENNESSEE
1715 VOLUNTEER BLVD., RM 313
KNOXVILLE, TN 37996
CONTACT: LIVLIGHT@UTK.EDU
HTTP://LIVINGLIGHTUTK.COM


CONSULTANTS

JAMES ROSE ARCHITECT
MALLIA ENGINEERING
ROSS BRYAN ASSOCIATES
RICHARD KELSO
LEON TOLBERT

CLIENT
U.S. DEPARTMENT OF ENERGY
SOLAR DECATHLON 2011
WWW.SOLARDECATHLON.GOV

U.S. DEPARTMENT OF ENERGY SOLAR DECATHLON

| MARK | DATE | DESCRIPTION |
|---|---|---|

| | |
|---|---|
| LOT NUMBER: | 202 |
| DRAWN BY: | JOHN HAND |
| CHECKED BY: | JAMES ROSE |
| COPYRIGHT: | NONE: PROJECT IS PUBLIC DOMAIN |

SHEET TITLE
PHOTOVOLTAIC ROOF RACK DETAILS

A-507

8/13/2011 10:44:57 AM

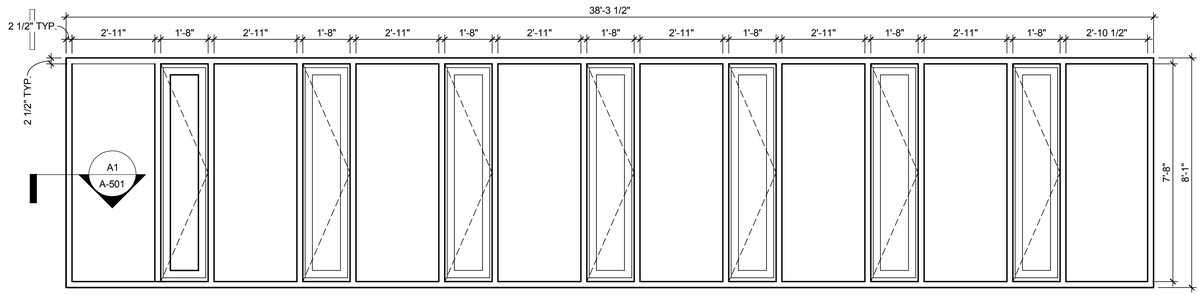


2 INTERIOR CURTAINWALL (INTERIOR ELEVATION)

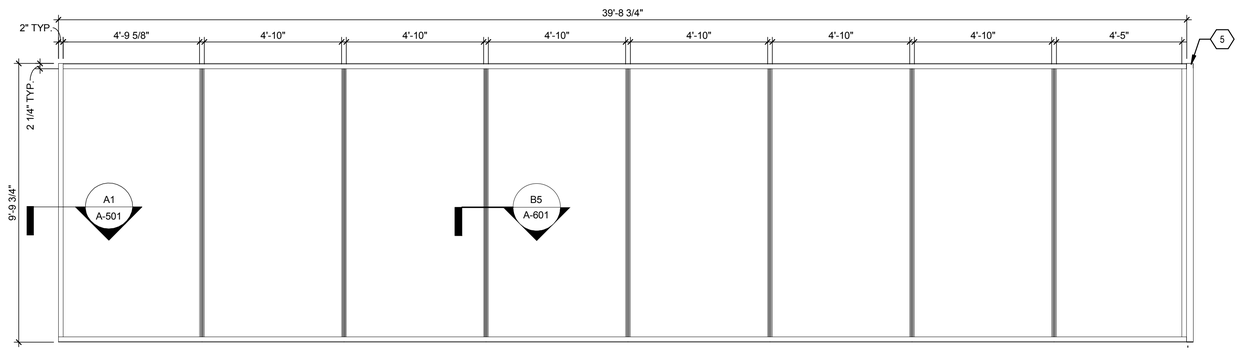


1 EXTERIOR STOREFRONT (EXTERIOR ELEVATION)

## C1 WINDOW ELEVATIONS

3/8" = 1'-0"

0 2' 4' 6'

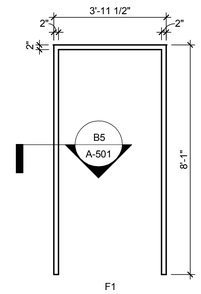


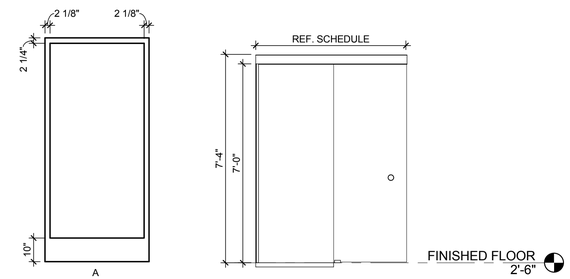


## C5 DOOR FRAME AND DOOR ELEVATIONS

3/8" = 1'-0"

0 2' 4' 6'

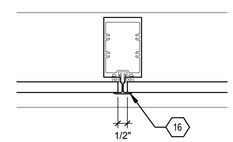


## B5 STOREFRONT DETAIL

3" = 1'-0"

0 1/2' 1' 1 1/2'

| WINDOW SCHEDULE | | | | | | | | | | | | | | | |
|---|---|---|---|---|---|---|---|---|---|---|---|---|---|---|---|
| | FRAME | | | | | | | DETAIL | | | GLAZING | | HEAD | | |
| MARK | WIDTH | HEIGHT | TYPE | MANUFACTURER | MODEL | MATERIAL | FINISH | HEAD | JAMB | SILL | THICKNESS | TYPE | HEIGHT | COUNT | COMMENTS |
| 1 | 39'-8 3/4" | 9'-9 3/4" | EXTERIOR STOREFRONT | KAWNEER | TRIFAB 451 | ALUMINUM | CLEAR ANODIZED | C1/A-504 | C4/A-501 | A1/A-504 | 9/16" | LAMINATED SINGLE PANE, TEMPERED | 9'-10" | 2 | |
| 2 | 38'-3 1/2" | 8'-1" | INTERIOR CURTAINWALL | KAWNEER | 7500 WALL WITH AA900 ISOWEB OPERABLE VENTS | ALUMINUM | CLEAR ANODIZED | C1/A-504 | C4/A-501 | A1/A-504 | 2" | SUSPENDED FILM, TEMPERED | 8'-1" | 2 | 1, 2 |

COMMENTS:

1. WOOD VENEER AT INTERIOR CAPS OF CURTAINWALL FRAME, TO BE CONFIRMED WITH ARCHITECT AFTER SAMPLE IS PROVIDED.
2. AT SOUTH WALL: FIXED GLAZING PANELS TO BE CLEAR SUSPENDED FILM GLASS, OPERABLE GLAZING PANELS TO BE TRANSLUCENT SUSPENDED FILM GLASS
   AT NORTH WALL: FIXED GLAZING PANELS TO BE TRANSLUSCENT SUSPENDED FILM GLASS, OPERABLE GLAZING PANELS TO BE CLEAR SUSPENDED FILM GLASS

| DOOR SCHEDULE | | | | | | | | | | | | | |
|---|---|---|---|---|---|---|---|---|---|---|---|---|---|
| | | | | | | | DETAILS | | | | FINISH | | |
| MARK | DR TYPE | DR SIZE | MANUFACTURER | MODEL | FRAME TYPE | FIRE RATING | HEAD | JAMB | SILL | DESCRIPTION | DOOR | FRAME | COMPONENTS |
| 101 | A | 8'-1" X 3'-11 1/2" | KAWNEER | INSULCLAD 260 | F1 | - | C4/A-504 | C4/A-501 | A4/A-504 | ALUMINUM ENTRANCE | 1" FROSTED INSULATED GLASS, TEMPERED | CLEAR ANODIZED ALUMINUM | CLEAR ANODIZED ALUMINUM |
| 102 | A | 8'-1" X 3'-11 1/2" | KAWNEER | INSULCLAD 260 | F1 | - | C4/A-504 | C4/A-501 | A4/A-504 | ALUMINUM ENTRANCE | 1" FROSTED INSULATED GLASS, TEMPERED | CLEAR ANODIZED ALUMINUM | CLEAR ANODIZED ALUMINUM |
| 103 | B | 7'-0" X 5'-3 3/4" | HAFELE | EKU-PORTA 100/GF | - | - | D3/A-503 | | A3/A-503 | INTERIOR SLIDING GLASS DOOR | 8MM FROSTED GLASS, TEMPERED | CLEAR ANODIZED ALUMINUM | CLEAR ANODIZED ALUMINUM |
| 104 | B | 7'-0" X 5'-3" | HAFELE | EKU-PORTA 100/GF | - | - | D3/A-503 | | A3/A-503 | INTERIOR SLIDING GLASS DOOR | 8MM FROSTED GLASS, TEMPERED | CLEAR ANODIZED ALUMINUM | CLEAR ANODIZED ALUMINUM |

## GENERAL SHEET NOTES

1. VERIFY ALL DIMENSIONS IN FIELD

## REFERENCE KEYNOTES

## SHEET KEYNOTES

5 ALUMINUM PANEL TO WRAP BUILDING CORNER AND BE RECEIVED BY STOREFRONT FRAME

16 WEATHERSEAL

LIVING LIGHT


TEAM NAME: TENNESSEE

ADDRESS: UNIVERSITY OF TENNESSEE
1715 VOLUNTEER BLVD., RM 313
KNOXVILLE, TN 37996

CONTACT: LIVLIGHT@UTK.EDU
HTTP://LIVINGLIGHTUTK.COM

CONSULTANTS

JAMES ROSE ARCHITECT

MALLIA ENGINEERING

ROSS BRYAN ASSOCIATES

RICHARD KELSO

LEON TOLBERT


CLIENT

U.S. DEPARTMENT OF ENERGY

SOLAR DECATHLON 2011

WWW.SOLARDECATHLON.GOV

U.S. DEPARTMENT OF ENERGY SOLAR DECATHLON

| MARK | DATE | DESCRIPTION |
|---|---|---|

LOT NUMBER: 202

DRAWN BY: MEGAN CHAFIN

CHECKED BY: JAMES ROSE


COPYRIGHT: NONE: PROJECT IS PUBLIC DOMAIN


SHEET TITLE

DOOR & WINDOW SCHEDULES AND ELEVATIONS

A-601

8/13/2011 10:45:01 AM

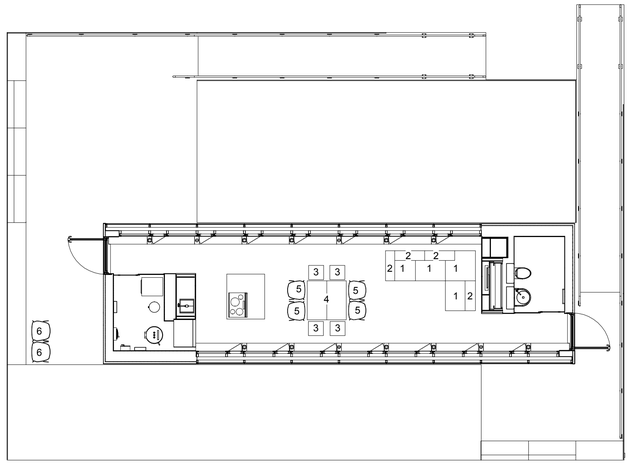

C1 DINNER NIGHT
1/8" = 1'-0"

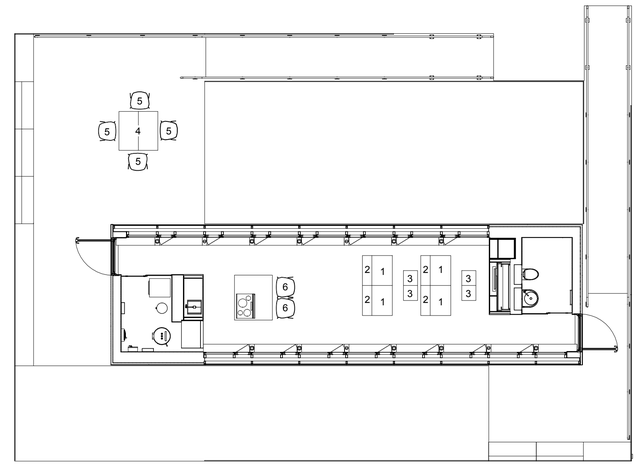

C4 MOVIE NIGHT
1/8" = 1'-0"

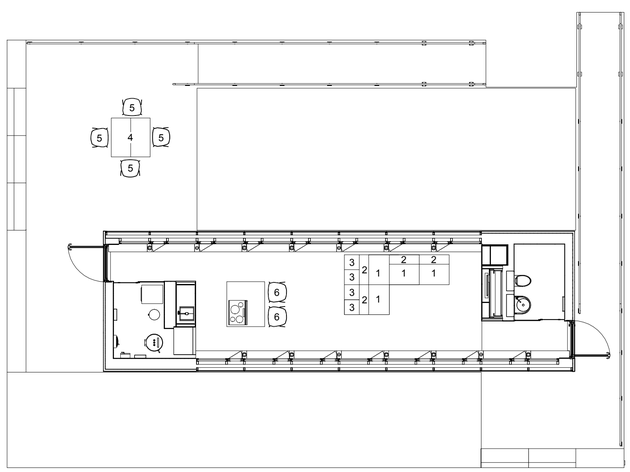

A1 PUBLIC EXHIBIT
1/8" = 1'-0"

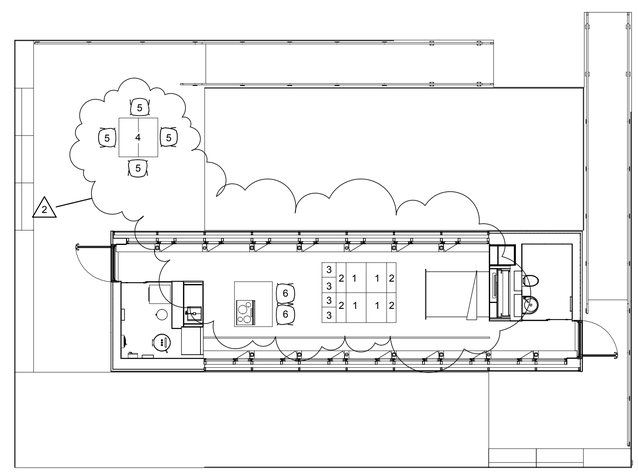

A4 BEDTIME
1/8" = 1'-0"

## GENERAL SHEET NOTES

1. REFERENCE SHEET I-601 FOR FURNITURE SCHEDULE.
2. ALL LOOSE FURNITURE TO BE PROVIDED BY OTHERS.

## REFERENCE KEYNOTES

## SHEET KEYNOTES

LIVING LIGHT

| | |
|---|---|
| TEAM NAME: | TENNESSEE |
| ADDRESS: | UNIVERSITY OF TENNESSEE<br>1715 VOLUNTEER BLVD., RM 313<br>KNOXVILLE, TN 37996 |
| CONTACT: | LIVLIGHT@UTK.EDU<br>HTTP://LIVINGLIGHTUTK.COM |

CONSULTANTS

JAMES ROSE ARCHITECT
MALLIA ENGINEERING
ROSS BRYAN ASSOCIATES
RICHARD KELSO
LEON TOLBERT

CLIENT

U.S. DEPARTMENT OF ENERGY
SOLAR DECATHLON 2011
WWW.SOLARDECATHLON.GOV

U.S. DEPARTMENT OF ENERGY SOLAR DECATHLON

| MARK | DATE | DESCRIPTION |
|---|---|---|
| 2 | 3.22.11 | DOE CD SET |

| | |
|---|---|
| LOT NUMBER: | 202 |
| DRAWN BY: | JEREMY WINTER |
| CHECKED BY: | JAMES ROSE |
| COPYRIGHT: | NONE: PROJECT IS PUBLIC DOMAIN |

SHEET TITLE

INTERIORS PLAN

I-101

8/13/2011 10:49:21 AM

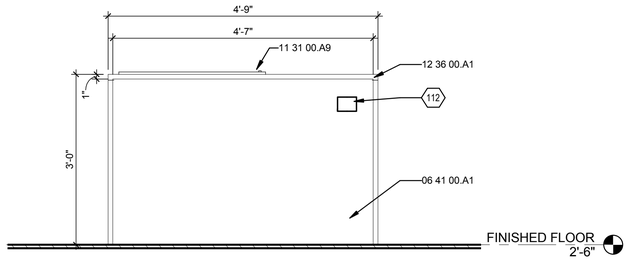


## D1 KITCHEN ISLAND EAST ELEVATION

3/4" = 1'-0"

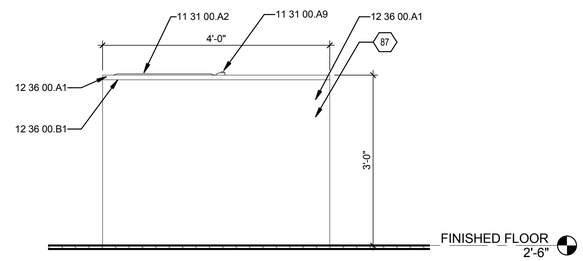


## D4 KITCHEN ISLAND SOUTH ELEVATION

3/4" = 1'-0"

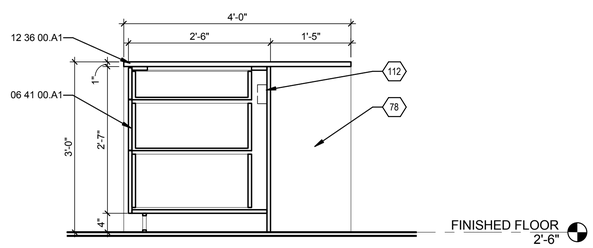


## C1 KITCHEN ISLAND SECTION LOOKING NORTH

3/4" = 1'-0"

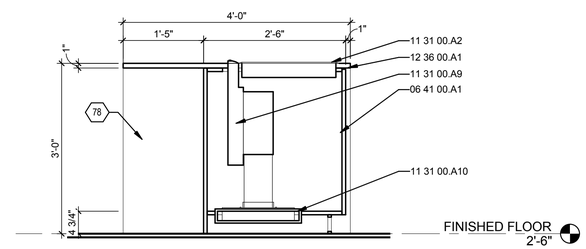


## C4 KITCHEN ISLAND SECTION LOOKING SOUTH

3/4" = 1'-0"

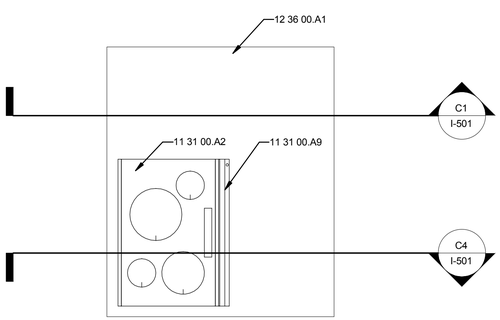


## A1 I-501 KITCHEN ISLAND PLAN

3/4" = 1'-0"

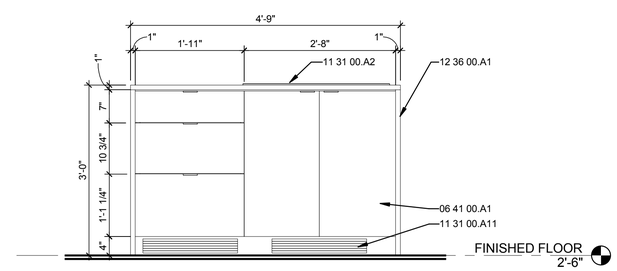


## A4 KITCHEN ISLAND WEST ELEVATION

3/4" = 1'-0"

## GENERAL SHEET NOTES

## REFERENCE KEYNOTES

| | |
|---|---|
| 06 41 00.A1 | CUSTOM WOOD CASEWORK |
| 11 31 00.A2 | COOKTOP |
| 11 31 00.A9 | DOWNDRAFT VENT |
| 11 31 00.A10 | DOWNDRAFT RECIRCULATOR |
| 11 31 00.A11 | DOWNDRAFT RECIRCULATOR GRILLE |
| 12 36 00.A1 | COUNTERTOP |
| 12 36 00.B1 | HORIZONTAL JOINT, COLOR TO MATCH COUNTERTOP |

## SHEET KEYNOTES

| | |
|---|---|
| 78 | RETURN COUNTERTOP MATERIAL TO FACE OF CABINET |
| 87 | EXTEND COUNTERTOP MATERIAL TO FLOOR |
| 112 | ELECTRICAL OUTLET, REFERENCE SHEET E-101 |

LIVING LIGHT


TEAM NAME: TENNESSEE

ADDRESS: UNIVERSITY OF TENNESSEE
1715 VOLUNTEER BLVD., RM 313
KNOXVILLE, TN 37996

CONTACT: LIVLIGHT@UTK.EDU
HTTP://LIVINGLIGHTUTK.COM

CONSULTANTS

JAMES ROSE ARCHITECT

MALLIA ENGINEERING

ROSS BRYAN ASSOCIATES

RICHARD KELSO

LEON TOLBERT


CLIENT

U.S. DEPARTMENT OF ENERGY

SOLAR DECATHLON 2011

WWW.SOLARDECATHLON.GOV

U.S. DEPARTMENT OF ENERGY SOLAR DECATHLON

| MARK | DATE | DESCRIPTION |
|---|---|---|

| | |
|---|---|
| LOT NUMBER: | 202 |
| DRAWN BY: | DREW PARRY |
| CHECKED BY: | JAMES ROSE |
| COPYRIGHT: | NONE: PROJECT IS PUBLIC DOMAIN |

SHEET TITLE

KITCHEN ISLAND DETAILS

I-501

8/13/2011 10:49:25 AM

| APPLIANCE SCHEDULE | | | |
|---|---|---|---|
| MANUFACTURER | MODEL | COMMENTS | Count |
| BOSCH | DHD3014UC, DHD601DUC, DHDRM36UC | DOWNDRAFT VENT WITH RECIRCULATOR | 1 |
| BOSCH | NIT3065UC | INDUCTION COOK TOP | 1 |
| BOSCH | SHV43P13UC | INTEGRATED 24" DISHWASHER | 1 |
| GENERAL ELECTRIC | DCVH480EKWW | CLOTHES DRYER | 1 |
| GENERAL ELECTRIC | PSA1201RSS | CONVECTION OVEN | 1 |
| GENERAL ELECTRIC | WCHV4800KWW | CLOTHES WASHER | 1 |
| SHARP | HT-SB300 | 2.1 CHANNEL SOUND BAR | 1 |
| SHARP | LC-26DV28UT | 27" TV WITH BUILT IN DVD PLAYER | 1 |
| ZOOM-ROOM | QUEEN SIZE | MURPHY BED | 1 |

| ROOM FINISH SCHEDULE | | | | | |
|---|---|---|---|---|---|
| ROOM NO | ROOM NAME | FINISH | | | CEILING HT. |
| | | FLOOR | WALL | CEILING | |
| 101 | ENTRANCE VESTIBULE | HARDWOOD DRAINAGE FLOOR | 1/4" FINISHED PLYWOOD | SUSPENDED PLANK WOOD CEILING | 8' - 1" |
| 102 | MECHANICAL ROOM | HARDWOOD DRAINAGE FLOOR | 1/4" FINISHED PLYWOOD | FINISH GRADE PLYWOOD | 8 '- 10" |
| 103 | LIVING SPACE | HARDWOOD | WOOD CABINETRY | SUSPENDED PLANK WOOD CEILING | 8' - 1" |
| 104 | BATHROOM | HARDWOOD DRAINAGE FLOOR | COMPOSITE WOOD WALL PANELING | SUSPENDED PLANK WOOD CEILING | 8' - 1" |
| 105 | EXIT VESTIBULE | HARDWOOD DRAINAGE FLOOR | 1/4" FINISHED PLYWOOD | SUSPENDED PLANK WOOD CEILING | 8' - 1" |

NOTE : ALL INTERIOR FINISHES TO HAVE A FLAME SPREAD OF LESS THAN 200.

| FURNITURE SCHEDULE | | | | |
|---|---|---|---|---|
| MARK | COUNT | MANUFACTURER | MODEL | COMMENTS |
| 1 | 4 | WEST ELM | 15-2048544 | TILLARY OTTOMAN |
| 2 | 4 | WEST ELM | 15-2048742 | SINGLE BACK SUPPORT |
| 3 | 4 | SCHMIDINGER | FATTY CONTAINER 7100 | STORAGE CUBE |
| 4 | 1 | SWITCH MODERN | TREVI DINING TABLE | INDOOR/OUTDOOR TABLE |
| 5 | 4 | COALESSE | CO2465 | CHAIR |
| 6 | 2 | COALESSE | C02467 | STOOL |

NOTE : ALL LOOSE FURNITURE TO BE PROVIDED BY OTHERS

LIVING LIGHT


TEAM NAME: TENNESSEE

ADDRESS: UNIVERSITY OF TENNESSEE
1715 VOLUNTEER BLVD., RM 313
KNOXVILLE, TN 37996

CONTACT: LIVLIGHT@UTK.EDU
HTTP://LIVINGLIGHTUTK.COM


CONSULTANTS

JAMES ROSE ARCHITECT

MALLIA ENGINEERING

ROSS BRYAN ASSOCIATES

RICHARD KELSO

LEON TOLBERT

CLIENT

U.S. DEPARTMENT OF ENERGY

SOLAR DECATHLON 2011

WWW.SOLARDECATHLON.GOV

U.S. DEPARTMENT OF ENERGY SOLAR DECATHLON

| MARK | DATE | DESCRIPTION |
|---|---|---|

LOT NUMBER: 202

DRAWN BY: LAUREN MCCARTY

CHECKED BY: JAMES ROSE


COPYRIGHT: NONE: PROJECT IS PUBLIC DOMAIN


SHEET TITLE

# INTERIOR SCHEDULES

# I-601

8/13/2011 10:49:28 AM

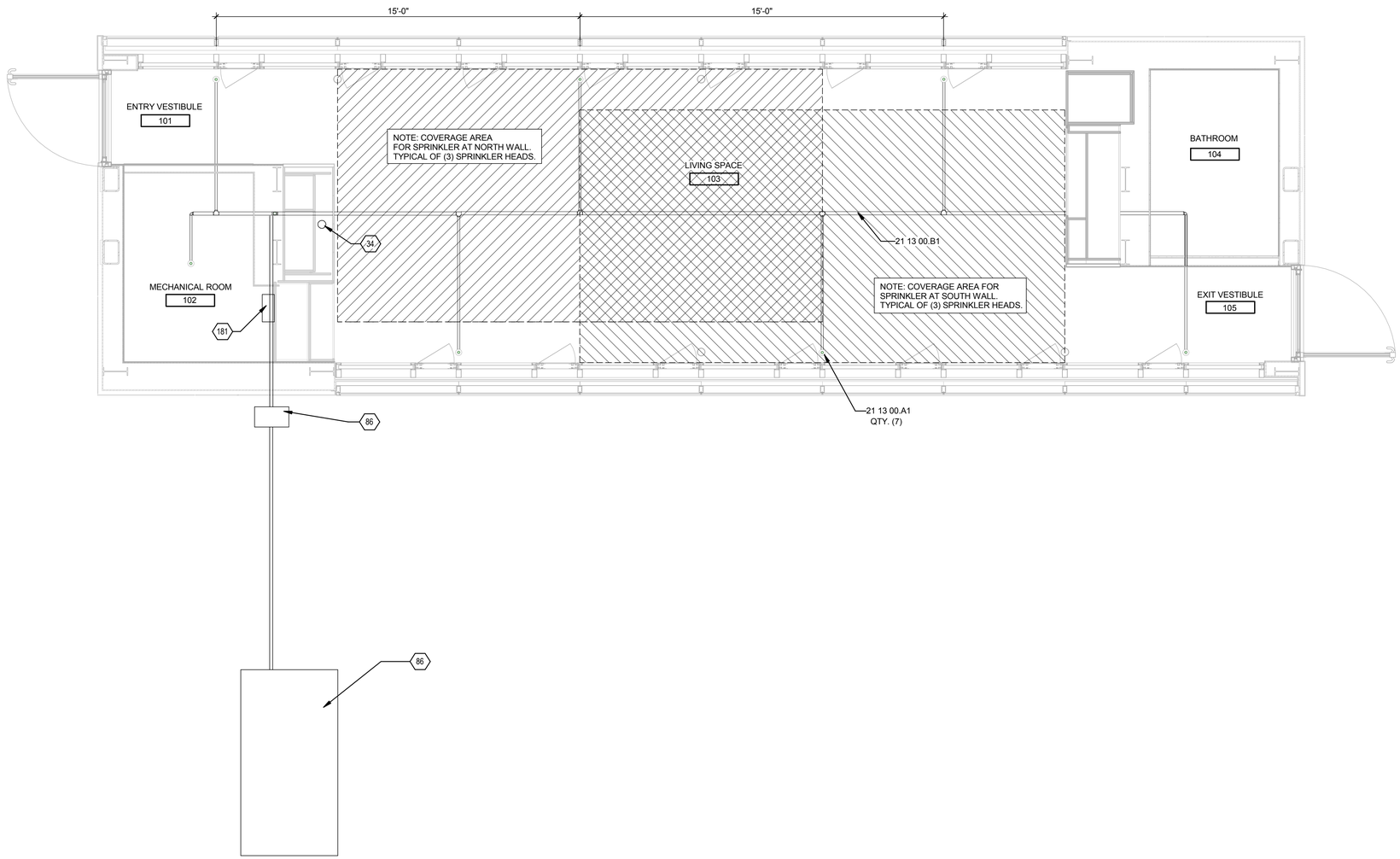


A1 FIRE PROTECTION PLAN

3/8" = 1'-0"

0 1/2' 1' 1 1/2'

8/13/2011 10:46:27 AM

## GENERAL SHEET NOTES

## REFERENCE KEYNOTES

| | |
|---|---|
| 21 13 00.A1 | CONCEALED SPRINKLER HEAD, 180 DEGREE SPREAD |
| 21 13 00.B1 | FIRE-SUPPRESSION SPRINKLER SYSTEM PIPING |

## SHEET KEYNOTES

| | |
|---|---|
| 34 | FIRE-EXTINGUISHER, LOCATED IN CABINET UNDER SINK. PROVIDE ADDITIONAL FIRE-EXTINQUISHER IN CABINET UNDER EXTERIOR SINK. |
| 86 | REFERENCE SHEET P-101 FOR FIRE TANK AND FIRE PUMP |
| 181 | SPARE SPRINKLER HEADS BOX |

LIVING LIGHT


TEAM NAME: TENNESSEE

ADDRESS: UNIVERSITY OF TENNESSEE
1715 VOLUNTEER BLVD., RM 313
KNOXVILLE, TN 37996

CONTACT: LIVLIGHT@UTK.EDU
HTTP://LIVINGLIGHTUTK.COM

CONSULTANTS

JAMES ROSE ARCHITECT

MALLIA ENGINEERING

ROSS BRYAN ASSOCIATES

RICHARD KELSO

LEON TOLBERT


CLIENT

U.S. DEPARTMENT OF ENERGY

SOLAR DECATHLON 2011

WWW.SOLARDECATHLON.GOV

U.S. DEPARTMENT OF ENERGY SOLAR DECATHLON

| MARK | DATE | DESCRIPTION |
|---|---|---|

| | |
|---|---|
| LOT NUMBER: | 202 |
| DRAWN BY: | DREW PARRY |
| CHECKED BY: | JAMES ROSE |
| COPYRIGHT: | NONE: PROJECT IS PUBLIC DOMAIN |

SHEET TITLE

FIRE PROTECTION PLAN

F-101

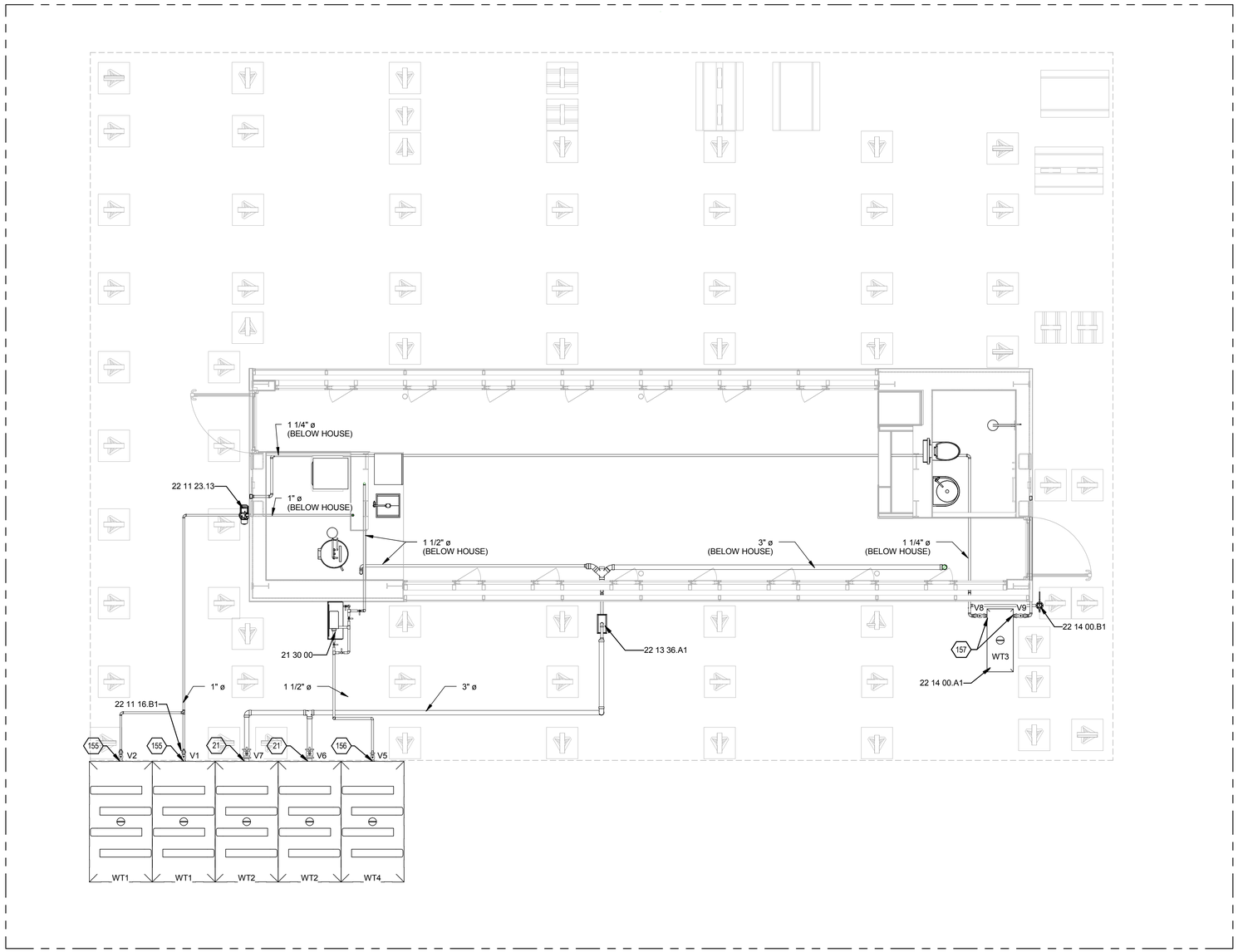


A1 PLUMBING SITE PLAN
1/4" = 1'-0"

0 2' 4' 8'

| PLUMBING LEGEND | |
|---|---|
| V | SHUT OFF VALVE |
| WT | WATER TANK |
| | PUMP |
| | CHECK VALVE |
| | ELBOW TURNED DOWN |
| | ELBOW TURNED UP |
| | PIPE TURN |
| WT1 | SUPPLY TANK |
| WT2 | WASTE TANK |
| WT3 | RAIN CATCHMENT TANK |
| WT4 | FIRE TANK |

## GENERAL SHEET NOTES

1. PRIMARY SUPPLY TANKS ARE FULLY SHADED FROM DIRECT SOLAR RADIATON BY DECK AND SKIRT BOARD.

2. ALL WATER TANKS ARE RAISED 3 1/2" OFF THE GROUND USING (2) 4X4 DIMENSIONAL LUMBER MEMBERS.

3. REFERENCE SHEET O-105 FOR WATER DELIVERY AND REMOVAL DETAILS.

## REFERENCE KEYNOTES

| | |
|---|---|
| 21 30 00 | FIRE PUMPS |
| 22 11 16.B1 | SHUT OFF VALVE |
| 22 11 23.13 | DOMESTIC-WATER PACKAGED BOOSTER PUMPS |
| 22 13 36.A1 | WASTE WATER PUMP |
| 22 14 00.A1 | RAIN CISTERN |
| 22 14 00.B1 | HAND PUMP |

## SHEET KEYNOTES

| | |
|---|---|
| 21 | 3" OPENING IN TANK TO RECEIVE WATER LINE |
| 155 | 1" OPENING IN TANK TO RECEIVE WATER LINE |
| 156 | 1 1/2" OPENING IN TANK TO RECEIVE WATER LINE |
| 157 | 1 1/4" OPENING IN TANK TO RECEIVE WATER LINE |

LIVING LIGHT


TEAM NAME: TENNESSEE

ADDRESS: UNIVERSITY OF TENNESSEE
1715 VOLUNTEER BLVD., RM 313
KNOXVILLE, TN 37996

CONTACT: LIVLIGHT@UTK.EDU
HTTP://LIVINGLIGHTUTK.COM

CONSULTANTS

JAMES ROSE ARCHITECT

MALLIA ENGINEERING

ROSS BRYAN ASSOCIATES

RICHARD KELSO

LEON TOLBERT


CLIENT

U.S. DEPARTMENT OF ENERGY

SOLAR DECATHLON 2011

WWW.SOLARDECATHLON.GOV

U.S. DEPARTMENT OF ENERGY SOLAR DECATHLON

| MARK | DATE | DESCRIPTION |
|---|---|---|

| | |
|---|---|
| LOT NUMBER: | 202 |
| DRAWN BY: | ADAM RICHARDS |
| CHECKED BY: | RICHARD KELSO |
| COPYRIGHT: | NONE: PROJECT IS PUBLIC DOMAIN |

SHEET TITLE

PLUMBING SITE PLAN

P-101

8/13/2011 10:53:53 AM

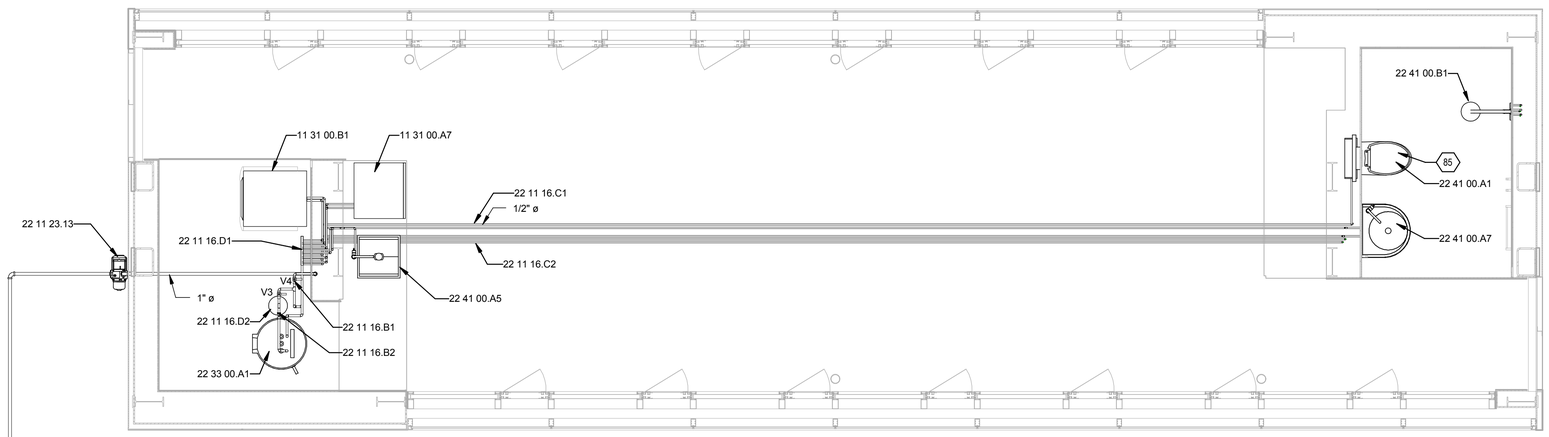


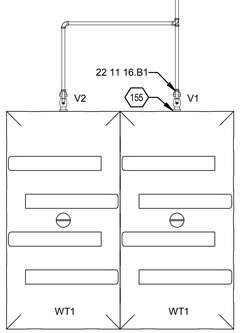


A1 DOMESTIC SUPPLY
3/8" = 1'-0"

0 2' 4' 6'

8/13/2011 10:53:59 AM

## GENERAL SHEET NOTES

## REFERENCE KEYNOTES

| | |
|---|---|
| 11 31 00.A7 | DISHWASHER |
| 11 31 00.B1 | CLOTHES WASHER |
| 22 11 16.B1 | SHUT OFF VALVE |
| 22 11 16.B2 | CHECK VALVE |
| 22 11 16.C1 | HOT WATER SUPPLY LINE |
| 22 11 16.C2 | COLD WATER SUPPLY LINE |
| 22 11 16.D1 | MANIFOLD |
| 22 11 16.D2 | EXPANSION TANK |
| 22 11 23.13 | DOMESTIC-WATER PACKAGED BOOSTER PUMPS |
| 22 33 00.A1 | HEAT PUMP ELECTRIC WATER HEATER |
| 22 41 00.A1 | WATER CLOSET |
| 22 41 00.A5 | UNDER COUNTER SINK |
| 22 41 00.A7 | WALL MOUNT SINK |
| 22 41 00.B1 | SHOWER |

## SHEET KEYNOTES

| | |
|---|---|
| 85 | TOILET NOT PLUMBED DURING COMPETITION |
| 155 | 1" OPENING IN TANK TO RECEIVE WATER LINE |

LIVING LIGHT


TEAM NAME: TENNESSEE

ADDRESS: UNIVERSITY OF TENNESSEE
1715 VOLUNTEER BLVD., RM 313
KNOXVILLE, TN 37996

CONTACT: LIVLIGHT@UTK.EDU
HTTP://LIVINGLIGHTUTK.COM

CONSULTANTS

JAMES ROSE ARCHITECT
MALLIA ENGINEERING
ROSS BRYAN ASSOCIATES
RICHARD KELSO
LEON TOLBERT


CLIENT
U.S. DEPARTMENT OF ENERGY
SOLAR DECATHLON 2011
WWW.SOLARDECATHLON.GOV

U.S. DEPARTMENT OF ENERGY SOLAR DECATHLON

| MARK | DATE | DESCRIPTION |
|---|---|---|

| | |
|---|---|
| LOT NUMBER: | 202 |
| DRAWN BY: | ADAM RICHARDS |
| CHECKED BY: | RICHARD KELSO |
| COPYRIGHT: | NONE: PROJECT IS PUBLIC DOMAIN |

SHEET TITLE
DOMESTIC SUPPLY

P-102

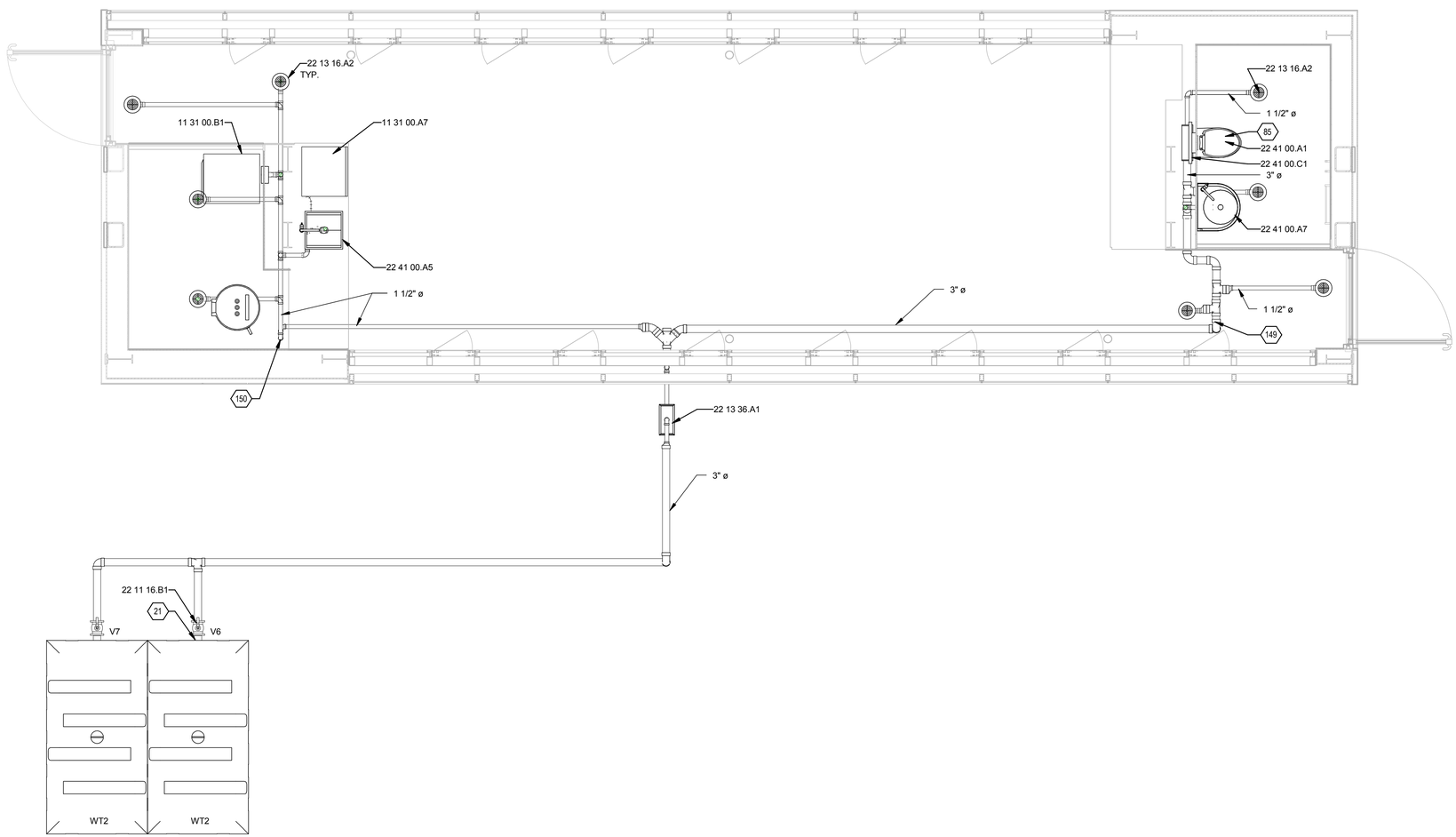


A1 DOMESTIC WASTE
3/8" = 1'-0"

0 2' 4' 6'

## GENERAL SHEET NOTES

## REFERENCE KEYNOTES

| | |
|---|---|
| 11 31 00.A7 | DISHWASHER |
| 11 31 00.B1 | CLOTHES WASHER |
| 22 11 16.B1 | SHUT OFF VALVE |
| 22 13 16.A2 | FLOOR DRAIN |
| 22 13 16.B1 | VENT STACK |
| 22 13 36.A1 | WASTE WATER PUMP |
| 22 41 00.A1 | WATER CLOSET |
| 22 41 00.A5 | UNDER COUNTER SINK |
| 22 41 00.A7 | WALL MOUNT SINK |
| 22 41 00.B1 | SHOWER |
| 22 41 00.C1 | WATER CLOSET TANK |

## SHEET KEYNOTES

| | |
|---|---|
| 21 | 3" OPENING IN TANK TO RECEIVE WATER LINE |
| 85 | TOILET NOT PLUMBED DURING COMPETITION |
| 149 | 3" DIA. WASTE LINE TO DROP BELOW HOUSE AT THIS POINT, REFERENCE SHEET P-201. |
| 150 | 1 1/2" DIA. WASTE LINE TO DROP BELOW HOUSE AT THIS POINT AND CONNECT TO 3" DIA. WASTE LINE, REFERENCE SHEET P-201. |

LIVING LIGHT


TEAM NAME: TENNESSEE

ADDRESS: UNIVERSITY OF TENNESSEE
1715 VOLUNTEER BLVD., RM 313
KNOXVILLE, TN 37996

CONTACT: LIVLIGHT@UTK.EDU
HTTP://LIVINGLIGHTUTK.COM

CONSULTANTS

JAMES ROSE ARCHITECT

MALLIA ENGINEERING

ROSS BRYAN ASSOCIATES

RICHARD KELSO

LEON TOLBERT


CLIENT

U.S. DEPARTMENT OF ENERGY

SOLAR DECATHLON 2011

WWW.SOLARDECATHLON.GOV

U.S. DEPARTMENT OF ENERGY SOLAR DECATHLON

| MARK | DATE | DESCRIPTION |
|---|---|---|

| | |
|---|---|
| LOT NUMBER: | 202 |
| DRAWN BY: | ADAM RICHARDS |
| CHECKED BY: | RICHARD KELSO |
| COPYRIGHT: | NONE: PROJECT IS PUBLIC DOMAIN |

SHEET TITLE

DOMESTIC WASTE

P-103

8/13/2011 10:54:04 AM

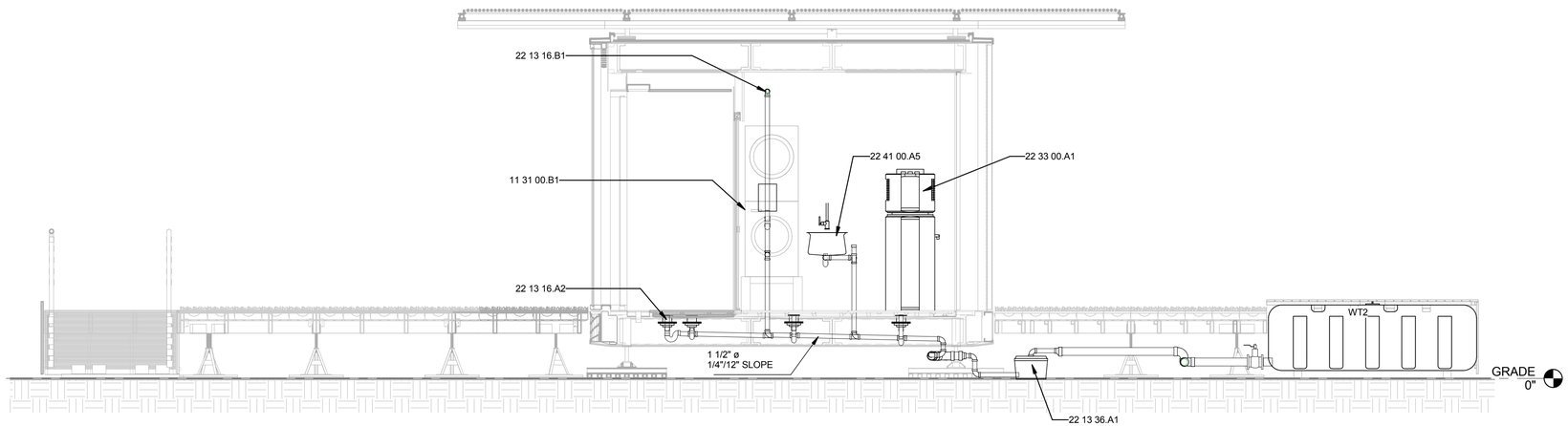


## C1 WASTE PLUMBING ELEVATION WEST CORE

3/8" = 1'-0"

0 2' 4' 6'

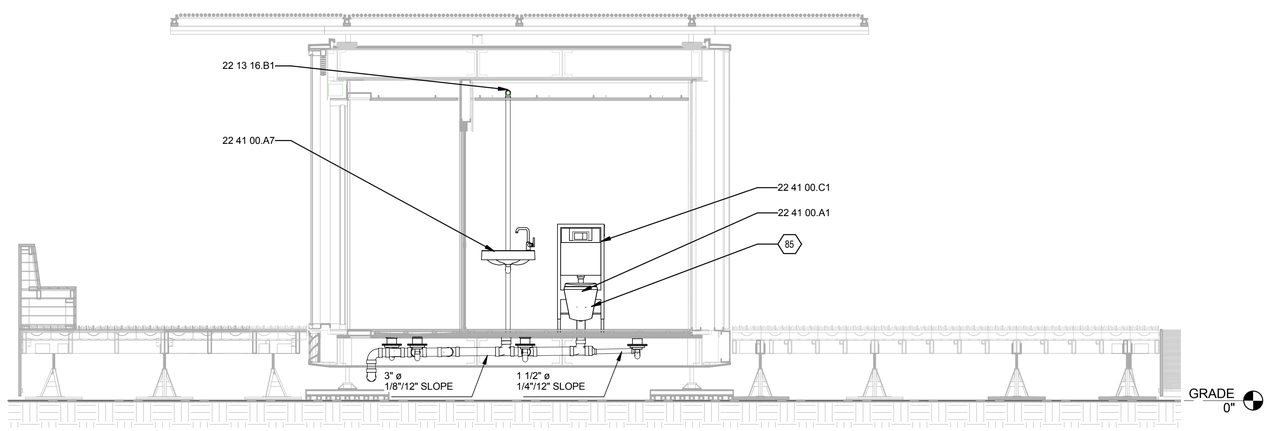


## A1 WASTE PLUMBING ELEVATION EAST CORE

3/8" = 1'-0"

0 2' 4' 6'

8/13/2011 10:54:32 AM

## GENERAL SHEET NOTES

## REFERENCE KEYNOTES

| | |
|---|---|
| 11 31 00.B1 | CLOTHES WASHER |
| 22 13 16.A2 | FLOOR DRAIN |
| 22 13 16.B1 | VENT STACK |
| 22 13 36.A1 | WASTE WATER PUMP |
| 22 33 00.A1 | HEAT PUMP ELECTRIC WATER HEATER |
| 22 41 00.A1 | WATER CLOSET |
| 22 41 00.A5 | UNDER COUNTER SINK |
| 22 41 00.A7 | WALL MOUNT SINK |
| 22 41 00.C1 | WATER CLOSET TANK |

## SHEET KEYNOTES

| | |
|---|---|
| 85 | TOILET NOT PLUMBED DURING COMPETITION |

LIVING LIGHT


TEAM NAME: TENNESSEE

ADDRESS: UNIVERSITY OF TENNESSEE
1715 VOLUNTEER BLVD., RM 313
KNOXVILLE, TN 37996

CONTACT: LIVLIGHT@UTK.EDU
HTTP://LIVINGLIGHTUTK.COM

CONSULTANTS

JAMES ROSE ARCHITECT

MALLIA ENGINEERING

ROSS BRYAN ASSOCIATES

RICHARD KELSO

LEON TOLBERT


CLIENT

U.S. DEPARTMENT OF ENERGY

SOLAR DECATHLON 2011

WWW.SOLARDECATHLON.GOV

U.S. DEPARTMENT OF ENERGY SOLAR DECATHLON

| MARK | DATE | DESCRIPTION |
|---|---|---|

| | |
|---|---|
| LOT NUMBER: | 202 |
| DRAWN BY: | ADAM RICHARDS |
| CHECKED BY: | RICHARD KELSO |
| COPYRIGHT: | NONE: PROJECT IS PUBLIC DOMAIN |

SHEET TITLE

# RISER ELEVATIONS

# P-201

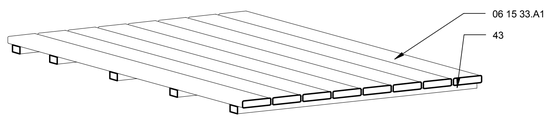


D1 REMOVABLE DRAINAGE FLOOR MODULE

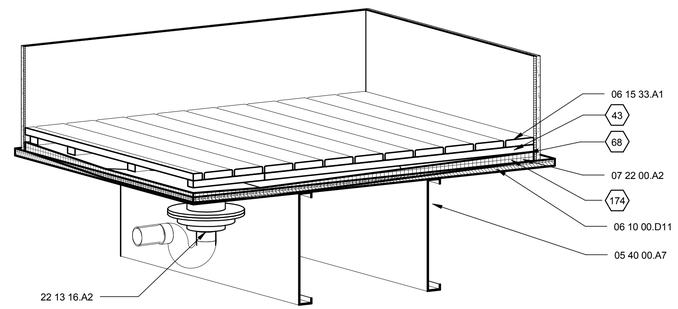


D4 DRAINAGE FLOOR ASSEMBLY

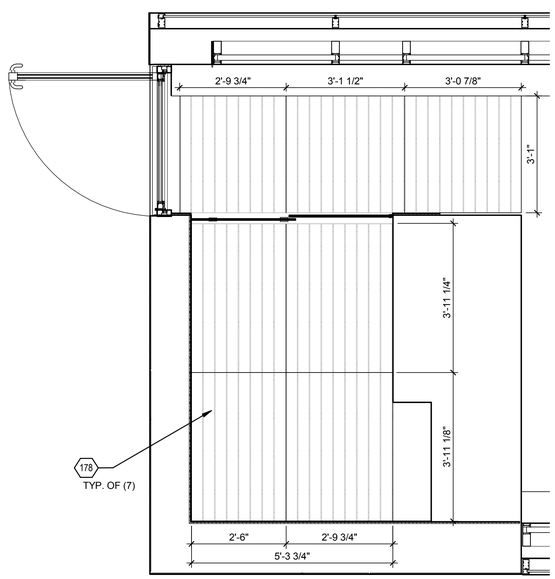


A1 WEST CORE DRAINAGE FLOOR
1/2" = 1'-0"

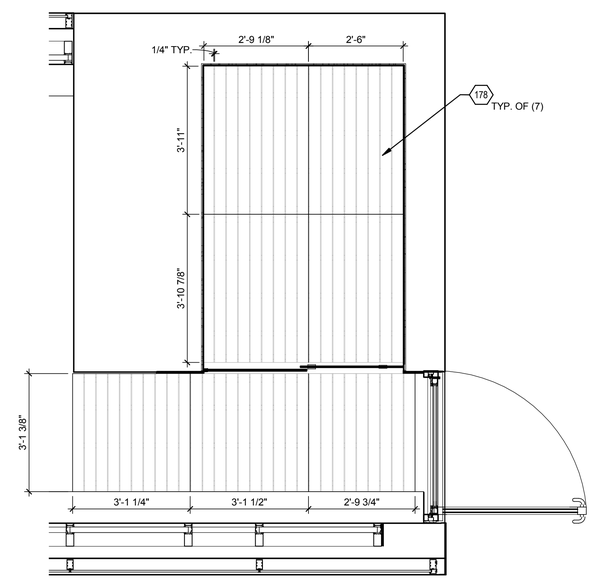


A4 EAST CORE DRAINAGE FLOOR
1/2" = 1'-0"

## GENERAL SHEET NOTES

1. COORDINATE REMOVABLE DRAINAGE FLOOR UNIT DIMENSIONS WITH AS-BUILT CONDITIONS.

## REFERENCE KEYNOTES

| | |
|---|---|
| 05 40 00.A7 | 12" "C" JOIST, 16" O.C. |
| 06 10 00.D11 | 3/4" PLYWOOD |
| 06 15 33.A1 | 1X4 WOOD DECKING |
| 07 22 00.A2 | TAPERED RIGID INSULATION |
| 22 13 16.A2 | FLOOR DRAIN |

## SHEET KEYNOTES

| | |
|---|---|
| 178 | REMOVABLE DRAINAGE FLOOR MODULE. REFERENCE D1/P-501. |
| 43 | 1 X 2 CYPRESS STRINGER, WATERPROOFED. PROVIDE SLOPED SHIMMING AS NEEDED AT TAPERED INSULATION. NOTCH TO ALLOW FOR WATER TO FLOW TO FLOOR DRAIN. |
| 68 | WATERPROOF MEMBRANE, TURN UP COUNTERFLASHING 6" BEHIND WALL FINISH |
| 174 | TAPERED INSULATION TO SLOPE TO FLOOR DRAINS |

LIVING LIGHT


TEAM NAME: TENNESSEE

ADDRESS: UNIVERSITY OF TENNESSEE
1715 VOLUNTEER BLVD., RM 313
KNOXVILLE, TN 37996

CONTACT: LIVLIGHT@UTK.EDU
HTTP://LIVINGLIGHTUTK.COM

CONSULTANTS

JAMES ROSE ARCHITECT

MALLIA ENGINEERING

ROSS BRYAN ASSOCIATES

RICHARD KELSO

LEON TOLBERT


CLIENT

U.S. DEPARTMENT OF ENERGY

SOLAR DECATHLON 2011

WWW.SOLARDECATHLON.GOV

U.S. DEPARTMENT OF ENERGY SOLAR DECATHLON

| MARK | DATE | DESCRIPTION |
|---|---|---|

| | |
|---|---|
| LOT NUMBER: | 202 |
| DRAWN BY: | JOHN CALVERT |
| CHECKED BY: | DR RICHARD KELSO |
| COPYRIGHT: | NONE: PROJECT IS PUBLIC DOMAIN |

SHEET TITLE

PLUMBING DETAILS

P-501

8/13/2011 10:54:37 AM

| PLUMBING FIXTURE SCHEDULE | | | | | | |
|---|---|---|---|---|---|---|
| TYPE | MODEL | MANUFACTURER | SUPPLY PIPE | WASTE CONNECTION | COUNT | DESCRIPTION |
| BATHROOM SINK | ARCHITEC SINK | DURAVIT USA | 1/2" PEX | 1 1/2" PVC | 1 | WALL HUNG |
| KITCHEN SINK | MIRUC1520Z | MIRABELLE | 1/2" PEX | 1 1/2" PVC | 1 | STAINLESS STEEL UNDERMOUNT SINK |
| TOILET | MIRWH220WH | MIRABELLE | 1/2" PEX | 3" PVC | 1 | WALL HUNG, DUAL FLUSH, LOW CONSUMPTION TOILET |
| THERMOSTATIC VALVE TRIM | MIRWH35852SNW | MIRABELLE | 1/2" PEX | NA | 1 | SATIN NICKLE TEMPERATURE AND VOLUME CONTROL |
| SHOWERHEAD | MIRWHSHWRHDSN | MIRABELLE | 1/2" PEX | NA | 1 | SATIN NICKLE |
| SHORT FAUCET | MIRWSED100PBN | MIRABELLE | 1/2" PEX | NA | 1 | STAINLESS STEEL 6" |
| KITCHEN FAUCET | RAVENEL | MIRABELLE | 1/2" PEX | NA | 1 | STAINLESS STEEL 8" |
| TOILET TANK | WT151M | MIRABELLE | 1/2" PEX | NA | 1 | HIDDEN IN WALL |

| PLUMBING EQUIPMENT SCHEDULE | | | | |
|---|---|---|---|---|
| KEYNOTE | MANUFACTURER | MODEL | COUNT | DESCRIPTION |
| 22 11 23.13 | WALRUS | WALRUS TQ400 | 1 | 60 Hz ELECTRONIC CONTROL PUMP |
| 22 13 36.A1 | SANIFLOW | SANISHOWER | 1 | WASTE WATER PUMP |
| 22 33 00.A1 | GENERAL ELECTRIC | GEH50DNSRA | 1 | HEAT PUMP WATER HEATER |

| WATER TANK SCHEDULE | | | | |
|---|---|---|---|---|
| MARK | MANUFACTURER | COUNT | CAPACITY | USE |
| WT1 | ACE/DENHARTOG | 2 | 500 GALLONS | SUPPLY |
| WT2 | ACE/DENHARTOG | 2 | 500 GALLONS | WASTE |
| WT3 | ACE/DENHARTOG | 1 | 45 GALLONS | RAIN CISTERN |
| WT4 | ACE/DENHARTOG | 1 | 500 GALLONS | FIRE SUPRESSION |

| WATER FILL AND REMOVAL SCHEDULE | | | |
|---|---|---|---|
| VALVE | FILL | COMPETITION | REMOVAL |
| V1 | OPEN | OPEN | CLOSED |
| V2 | OPEN | OPEN | CLOSED |
| V3 | OPEN | OPEN | OPEN |
| V4 | OPEN | OPEN | OPEN |
| V5 | CLOSED | OPEN | CLOSED |
| V6 | OPEN | OPEN | CLOSED |
| V7 | OPEN | OPEN | CLOSED |
| V8 | CLOSED | OPEN | CLOSED |
| V9 | CLOSED | OPEN | CLOSED |

LIVING LIGHT


TEAM NAME: TENNESSEE

ADDRESS: UNIVERSITY OF TENNESSEE
1715 VOLUNTEER BLVD., RM 313
KNOXVILLE, TN 37996

CONTACT: LIVLIGHT@UTK.EDU
HTTP://LIVINGLIGHTUTK.COM


CONSULTANTS

JAMES ROSE ARCHITECT

MALLIA ENGINEERING

ROSS BRYAN ASSOCIATES

RICHARD KELSO

LEON TOLBERT

CLIENT

U.S. DEPARTMENT OF ENERGY

SOLAR DECATHLON 2011

WWW.SOLARDECATHLON.GOV

U.S. DEPARTMENT OF ENERGY SOLAR DECATHLON

| MARK | DATE | DESCRIPTION |
|---|---|---|

LOT NUMBER: 202

DRAWN BY: ADAM RICHARDS

CHECKED BY: RICHARD KELSO


COPYRIGHT: NONE: PROJECT IS PUBLIC DOMAIN


SHEET TITLE

# PLUMBING SCHEDULES

# P-601

8/13/2011 10:54:39 AM

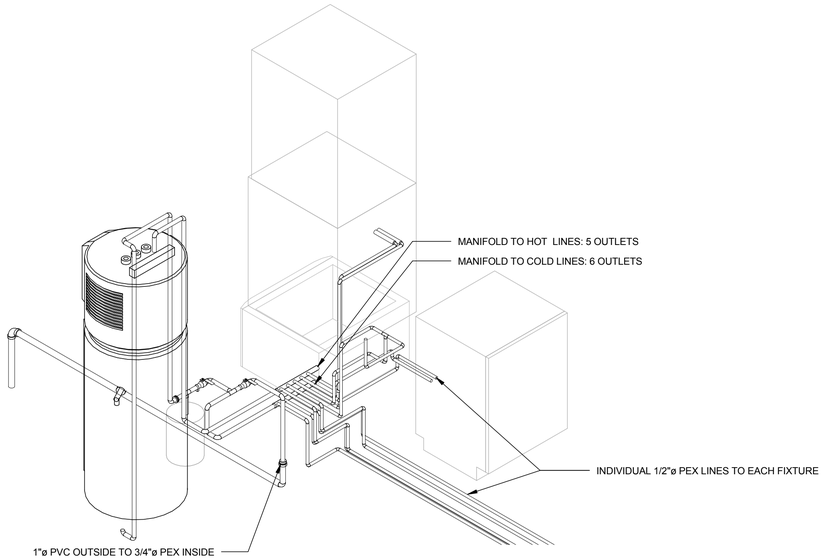


c1 DETAIL SUPPLY ISOMETRIC

0 1' 2' 3'

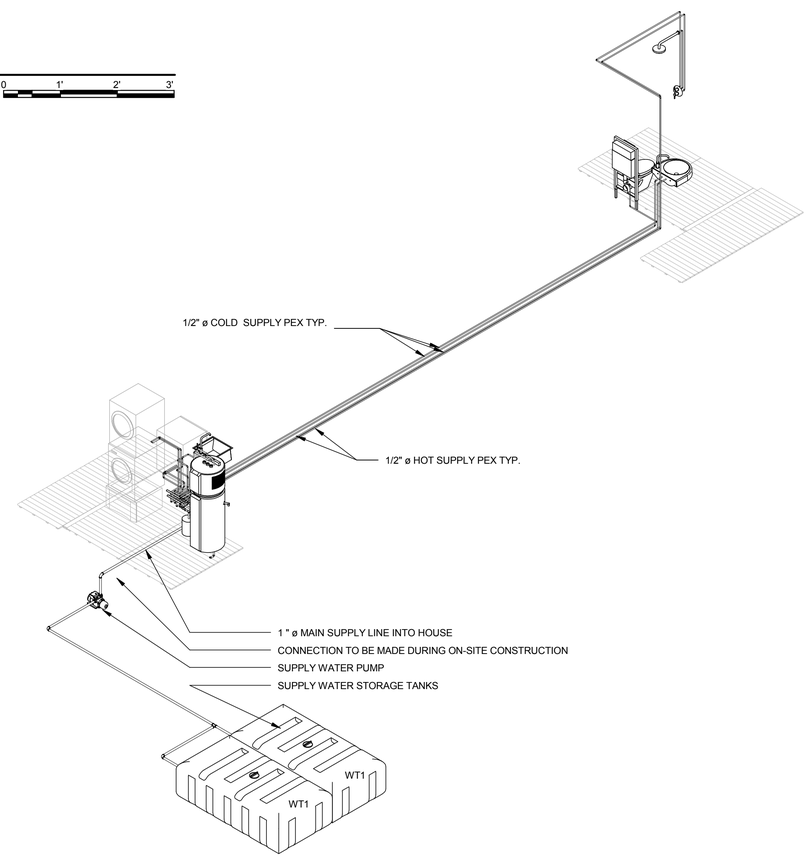


A1 SUPPLY ISOMETRIC

0 2' 4' 8'

## GENERAL SHEET NOTES

1. 3/4" PEX HOT AND COLD SUPPLY LINES TO MANIFOLDS. 1/2"ø (6) LINES RUN FROM THE COLD MANIFOLD. 1/2"ø (5) LINES RUN FROM THE HOT MANIFOLD. EACH FIXTURE RECEIVES ITS OWN HOT AND COLD SUPPLY LINES, EXCEPT FOR THE TOILET, WHICH RECEIVES ONLY COLD.

## REFERENCE KEYNOTES

## SHEET KEYNOTES

LIVING LIGHT


TEAM NAME: TENNESSEE

ADDRESS: UNIVERSITY OF TENNESSEE
1715 VOLUNTEER BLVD., RM 313
KNOXVILLE, TN 37996

CONTACT: LIVLIGHT@UTK.EDU
HTTP://LIVINGLIGHTUTK.COM


CONSULTANTS

JAMES ROSE ARCHITECT
MALLIA ENGINEERING
ROSS BRYAN ASSOCIATES
RICHARD KELSO
LEON TOLBERT

CLIENT

U.S. DEPARTMENT OF ENERGY
SOLAR DECATHLON 2011
WWW.SOLARDECATHLON.GOV

U.S. DEPARTMENT OF ENERGY SOLAR DECATHLON

| MARK | DATE | DESCRIPTION |
|---|---|---|

| | |
|---|---|
| LOT NUMBER: | 202 |
| DRAWN BY: | ADAM RICHARDS |
| CHECKED BY: | RICHARD KELSO |
| COPYRIGHT: | NONE: PROJECT IS PUBLIC DOMAIN |

SHEET TITLE

SUPPLY ISOMETRIC

P-901

8/13/2011 10:54:43 AM

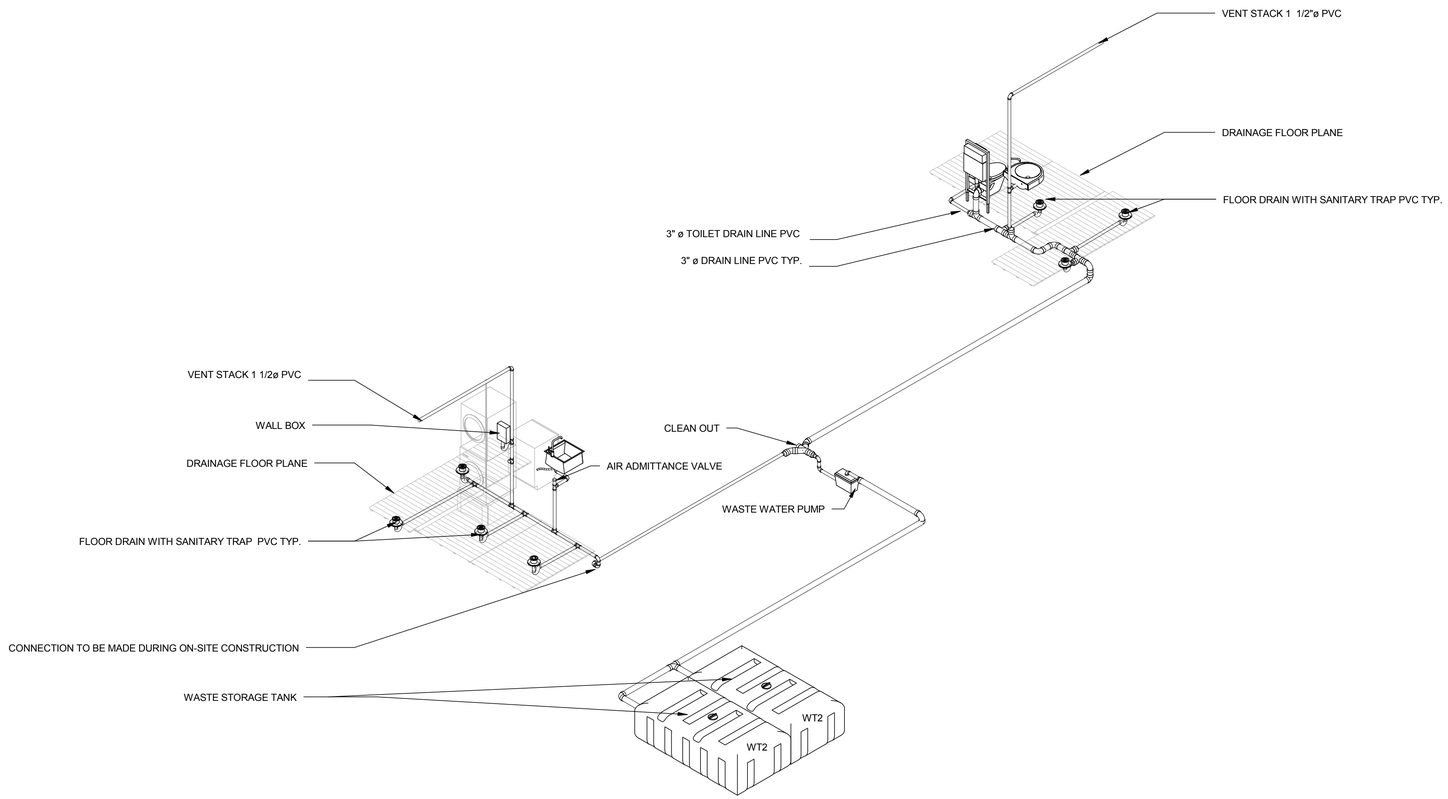


A1 WASTE ISOMETRIC

0 2' 4' 8'

8/13/2011 10:54:47 AM

## GENERAL SHEET NOTES

## REFERENCE KEYNOTES

## SHEET KEYNOTES

LIVING LIGHT

| | |
|---|---|
| TEAM NAME: | TENNESSEE |
| ADDRESS: | UNIVERSITY OF TENNESSEE<br>1715 VOLUNTEER BLVD., RM 313<br>KNOXVILLE, TN 37996 |
| CONTACT: | LIVLIGHT@UTK.EDU<br>HTTP://LIVINGLIGHTUTK.COM |

CONSULTANTS

JAMES ROSE ARCHITECT
MALLIA ENGINEERING
ROSS BRYAN ASSOCIATES
RICHARD KELSO
LEON TOLBERT

CLIENT

U.S. DEPARTMENT OF ENERGY
SOLAR DECATHLON 2011
WWW.SOLARDECATHLON.GOV

U.S. DEPARTMENT OF ENERGY SOLAR DECATHLON

| MARK | DATE | DESCRIPTION |
|---|---|---|

| | |
|---|---|
| LOT NUMBER: | 202 |
| DRAWN BY: | ADAM RICHARDS |
| CHECKED BY: | RICHARD KELSO |
| COPYRIGHT: | NONE: PROJECT IS PUBLIC DOMAIN |

SHEET TITLE

WASTE ISOMETRIC

P-902

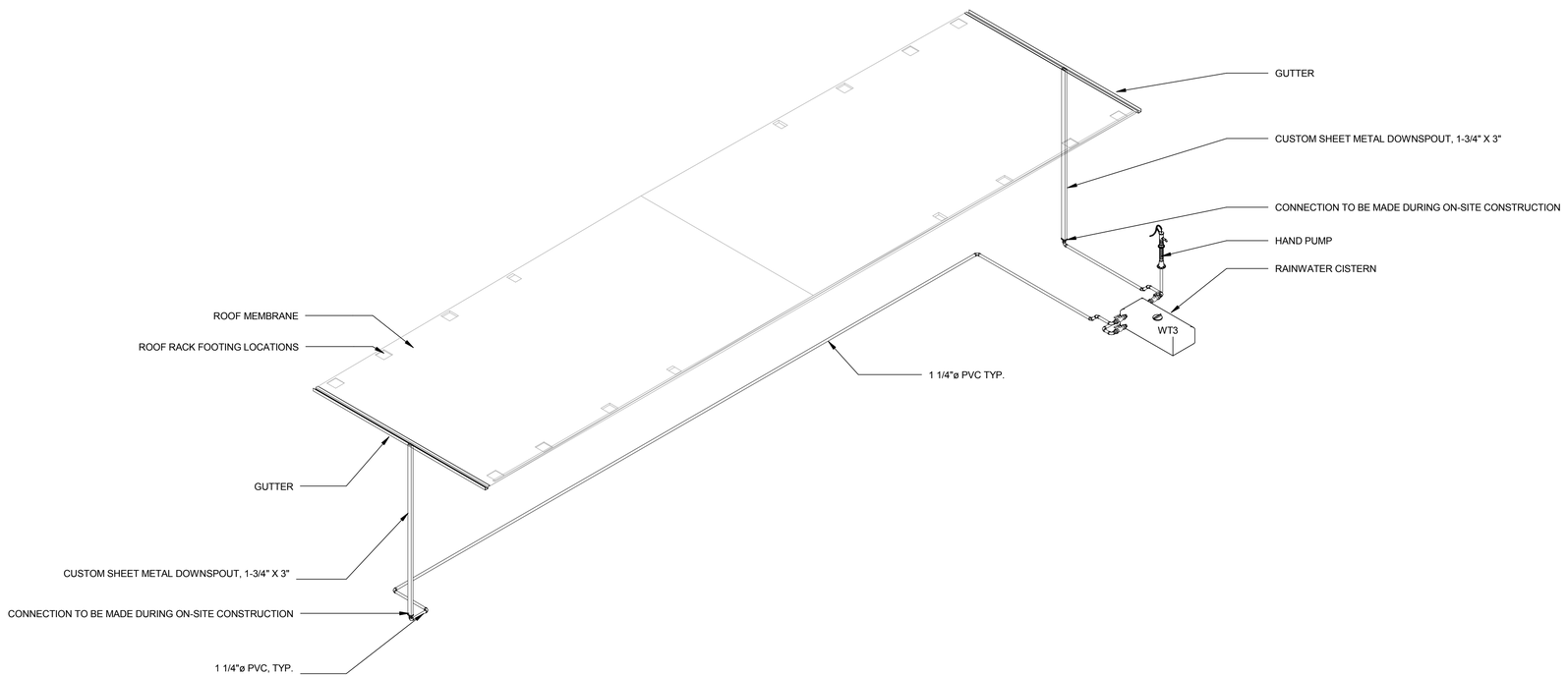


A1 RAINWATER COLLECTION ISOMETRIC

0 2' 4' 8'

## GENERAL SHEET NOTES

## REFERENCE KEYNOTES

## SHEET KEYNOTES

LIVING LIGHT

| | |
|---|---|
| TEAM NAME: | TENNESSEE |
| ADDRESS: | UNIVERSITY OF TENNESSEE<br>1715 VOLUNTEER BLVD., RM 313<br>KNOXVILLE, TN 37996 |
| CONTACT: | LIVLIGHT@UTK.EDU<br>HTTP://LIVINGLIGHTUTK.COM |

CONSULTANTS

JAMES ROSE ARCHITECT
MALLIA ENGINEERING
ROSS BRYAN ASSOCIATES
RICHARD KELSO
LEON TOLBERT

CLIENT

U.S. DEPARTMENT OF ENERGY
SOLAR DECATHLON 2011
WWW.SOLARDECATHLON.GOV

U.S. DEPARTMENT OF ENERGY SOLAR DECATHLON

| MARK | DATE | DESCRIPTION |
|---|---|---|

| | |
|---|---|
| LOT NUMBER: | 202 |
| DRAWN BY: | ADAM RICHARDS |
| CHECKED BY: | RICHARD KELSO |
| COPYRIGHT: | NONE: PROJECT IS PUBLIC DOMAIN |

SHEET TITLE

RAINWATER COLLECTION ISOMETRIC

P-903

8/13/2011 10:54:51 AM

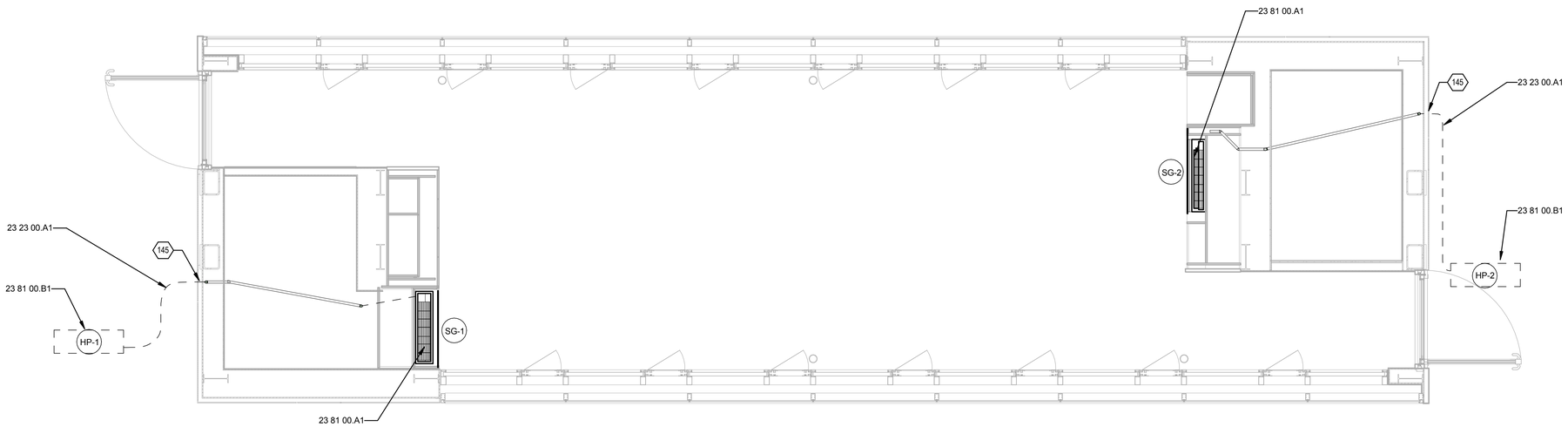


## C1 HEAT PUMP REFLECTED CEILING PLAN

3/8" = 1'-0"

0 2' 4' 6'

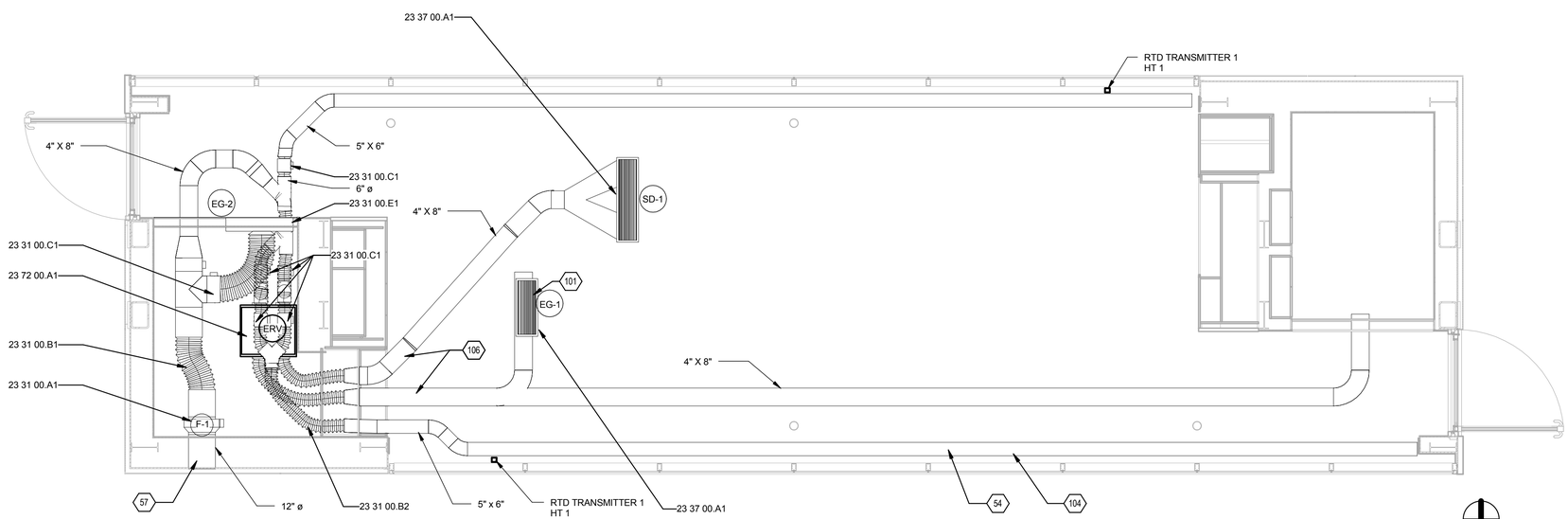


## A1 HVAC EQUIPMENT DISTRIBUTION PLAN

3/8" = 1'-0"

0 2' 4' 6'

8/13/2011 10:51:26 AM

## GENERAL SHEET NOTES

1. USE SHEET METAL DUCT WHERE POSSIBLE, USE FLEXIBLE DUCT WHEN NECESSARY.
2. REFERENCE SHEET T-501 FOR TRANSMITTER SCHEDULE.

## REFERENCE KEYNOTES

| | |
|---|---|
| 23 23 00.A1 | REFRIGERANT PIPING |
| 23 31 00.A1 | CENTRIFUGAL HVAC FAN |
| 23 31 00.B1 | 12" DIAMETER FLEXIBLE DUCT |
| 23 31 00.B2 | 6" DIAMETER FLEXIBLE DUCT |
| 23 31 00.C1 | DAMPER |
| 23 31 00.E1 | 8" HIGH X 6" WIDE X 30" LONG SHEET METAL PLENUM |
| 23 37 00.A1 | DIFFUSER |
| 23 72 00.A1 | ENERGY RECOVERY VENTILATOR |
| 23 81 00.A1 | DUCTLESS MINI-SPLIT INDOOR UNIT, PAINT BLACK |
| 23 81 00.B1 | DUCTLESS MINI-SPLIT CONDENSER UNIT |

## SHEET KEYNOTES

| | |
|---|---|
| 54 | EXHAUST/OUTSIDE AIR THROUGH BOTTOM OF FACADE CAVITY, REFERENCE C1/A-502 FOR INTAKE/EXHAUST DETAIL AND A1/A-502 FOR EXTERIOR LOUVER. |
| 56 | EXHAUST GRILLE ABOVE MECHANICAL ROOM DOOR |
| 57 | VENTILATION EXHAUST, REFERENCE SECTION 25 11 00 |
| 101 | PROVIDE CUSTOM GREASE FILTER SIZED TO MATCH GRILLE AT EXHAUST GRILLE |
| 104 | VARIABLE SLOTTED OPENING ALONG DUCT, REFERENCE SHEET A-311. SIZE OF OPENINGS TO COORDINATED WITH PROJECT ENGINEER. |
| 106 | NO INSULATION AT SUPPLY AND RETURN DUCTS TO AND FROM CONDITIONED SPACE. ALL REMAINING DUCTS TO BE INSULATED. |
| 145 | REFRIGERANT LINE EXTERIOR PENETRATION, REFERENCE A4/A-405 |

LIVING LIGHT


TEAM NAME: TENNESSEE

ADDRESS: UNIVERSITY OF TENNESSEE
1715 VOLUNTEER BLVD., RM 313
KNOXVILLE, TN 37996

CONTACT: LIVLIGHT@UTK.EDU
HTTP://LIVINGLIGHTUTK.COM

CONSULTANTS

JAMES ROSE ARCHITECT

MALLIA ENGINEERING

ROSS BRYAN ASSOCIATES

RICHARD KELSO

LEON TOLBERT


CLIENT

U.S. DEPARTMENT OF ENERGY

SOLAR DECATHLON 2011

WWW.SOLARDECATHLON.GOV

U.S. DEPARTMENT OF ENERGY SOLAR DECATHLON

| MARK | DATE | DESCRIPTION |
|---|---|---|

| | |
|---|---|
| LOT NUMBER: | 202 |
| DRAWN BY: | SCOTT SEARLE |
| CHECKED BY: | RICHARD KELSO |
| COPYRIGHT: | NONE: PROJECT IS PUBLIC DOMAIN |

SHEET TITLE

HVAC EQUIPMENT AND DISTRIBUTION PLAN

M-101

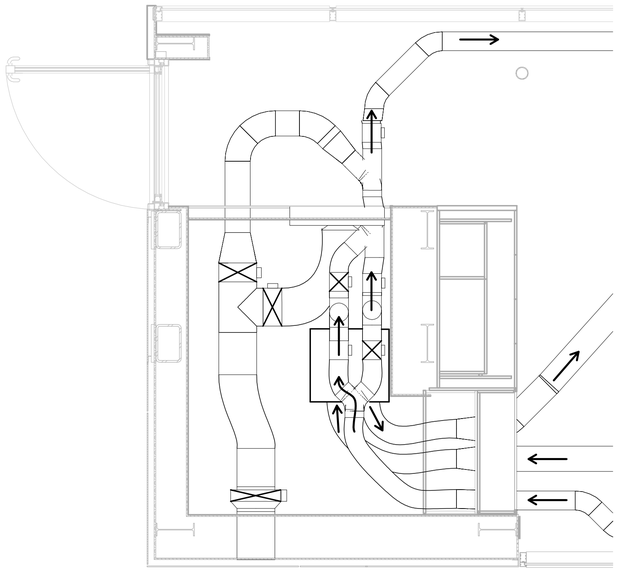

C1 HEATING PLAN
1/2" = 1'-0"

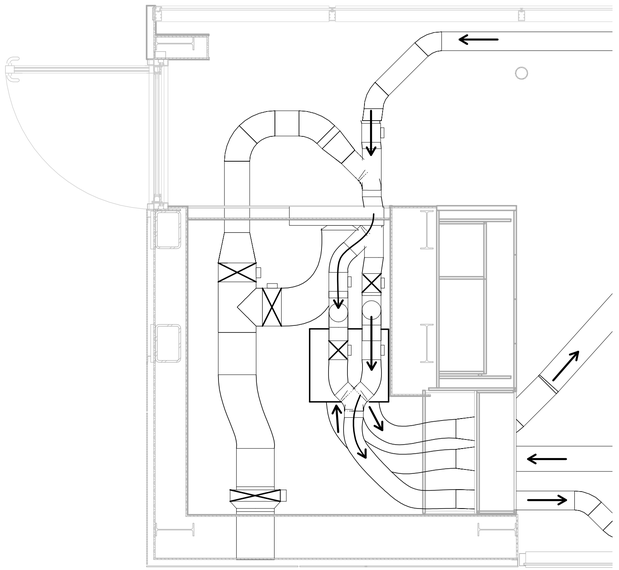

C4 COOLING PLAN
1/2" = 1'-0"

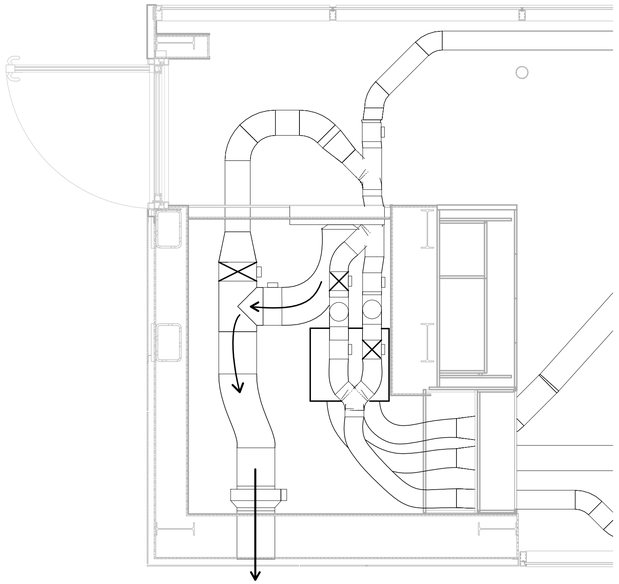

A1 VENTILATING PLAN
1/2" = 1'-0"

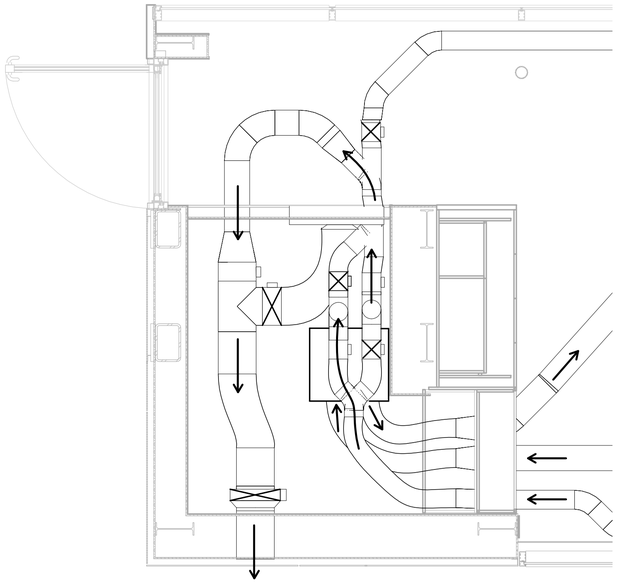

A4 COOKING/BATHROOM EXHAUST
1/2" = 1'-0"

VENTILATION PLAN LEGEND

- AIR FLOW
- DAMPER CLOSED
- DAMPER OPEN
- FAN OFF
- FAN ON

LIVING LIGHT

| | |
|---|---|
| TEAM NAME: | TENNESSEE |
| ADDRESS: | UNIVERSITY OF TENNESSEE<br>1715 VOLUNTEER BLVD., RM 313<br>KNOXVILLE, TN 37996 |
| CONTACT: | LIVLIGHT@UTK.EDU<br>HTTP://LIVINGLIGHTUTK.COM |

CONSULTANTS

- JAMES ROSE ARCHITECT
- MALLIA ENGINEERING
- ROSS BRYAN ASSOCIATES
- RICHARD KELSO
- LEON TOLBERT

CLIENT

U.S. DEPARTMENT OF ENERGY
SOLAR DECATHLON 2011
WWW.SOLARDECATHLON.GOV

U.S. DEPARTMENT OF ENERGY SOLAR DECATHLON

| MARK | DATE | DESCRIPTION |
|---|---|---|

| | |
|---|---|
| LOT NUMBER: | 202 |
| DRAWN BY: | MEGAN CHAFIN |
| CHECKED BY: | RICHARD KELSO |
| COPYRIGHT: | NONE: PROJECT IS PUBLIC DOMAIN |

SHEET TITLE

VENTILATION SYSTEM PLANS

M-102

8/13/2011 10:51:29 AM

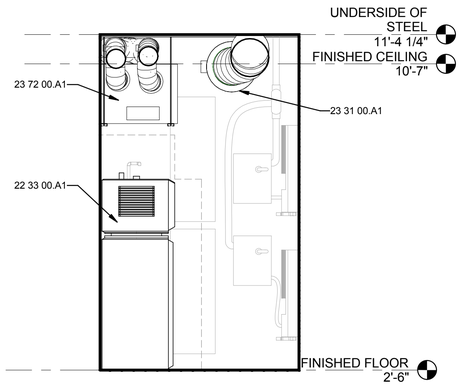


C1 SOUTH INTERIOR ELEVATION
1/2" = 1'-0"
0 1' 2' 4'

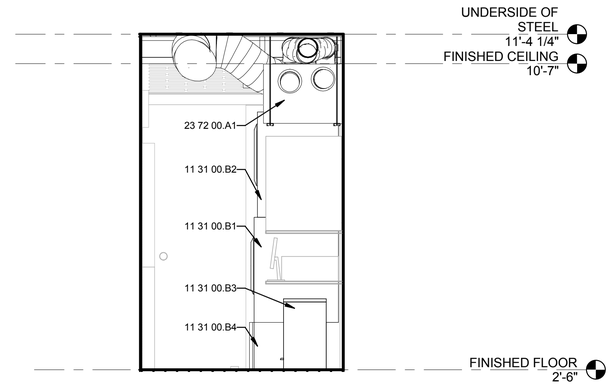


C4 NORTH INTERIOR ELEVATION
1/2" = 1'-0"
0 1' 2' 4'

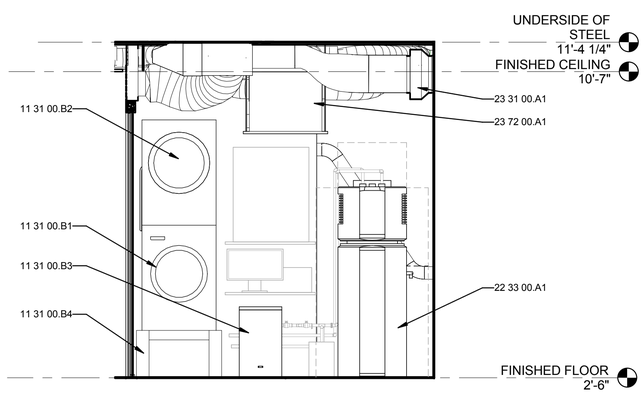


A1 EAST INTERIOR ELEVATION
1/2" = 1'-0"
0 1' 2' 4'

## GENERAL SHEET NOTES

1. DASHED LINES REPRESENT REQUIRED CLEARANCES AT MECHANICAL EQUIPMENT.
2. REFERENCE SHEET E-201 FOR ELECTRICAL EQUIPMENT LOCATED IN MECHANICAL ROOM.
3. REFRENCE SHEET T-501 FOR CONTROLS EQUIPMENT LOCATED IN MECHANICAL ROOM.

## REFERENCE KEYNOTES

| | |
|---|---|
| 11 31 00.B1 | CLOTHES WASHER |
| 11 31 00.B2 | CLOTHES DRYER |
| 11 31 00.B3 | SPIN DRYER |
| 11 31 00.B4 | DRYER PEDESTAL |
| 22 33 00.A1 | HEAT PUMP ELECTRIC WATER HEATER |
| 23 31 00.A1 | CENTRIFUGAL HVAC FAN |
| 23 72 00.A1 | ENERGY RECOVERY VENTILATOR |

## SHEET KEYNOTES

LIVING LIGHT


TEAM NAME: TENNESSEE

ADDRESS: UNIVERSITY OF TENNESSEE
1715 VOLUNTEER BLVD., RM 313
KNOXVILLE, TN 37996

CONTACT: LIVLIGHT@UTK.EDU
HTTP://LIVINGLIGHTUTK.COM

CONSULTANTS

JAMES ROSE ARCHITECT
MALLIA ENGINEERING
ROSS BRYAN ASSOCIATES
RICHARD KELSO
LEON TOLBERT


CLIENT

U.S. DEPARTMENT OF ENERGY
SOLAR DECATHLON 2011
WWW.SOLARDECATHLON.GOV

U.S. DEPARTMENT OF ENERGY SOLAR DECATHLON

| MARK | DATE | DESCRIPTION |
|---|---|---|

| | |
|---|---|
| LOT NUMBER: | 202 |
| DRAWN BY: | A. RICHARDS |
| CHECKED BY: | RICHARD KELSO |
| COPYRIGHT: | NONE: PROJECT IS PUBLIC DOMAIN |

SHEET TITLE

# MECHANICAL CLOSET ELEVATIONS

# M-201

8/13/2011 10:51:34 AM

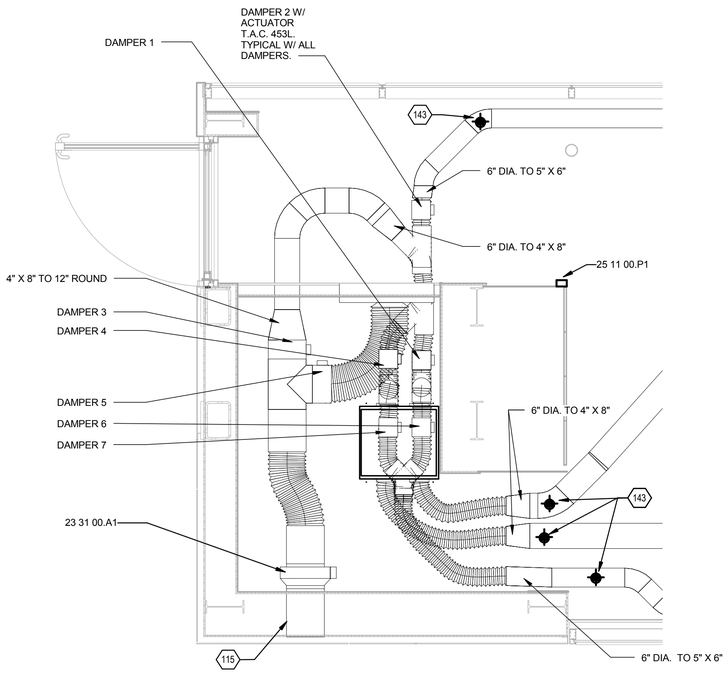


## C1 MECHANICAL DAMPER AND FAN REFLECTED CEILING PLAN

1/2" = 1'-0"

0 1' 2' 4'

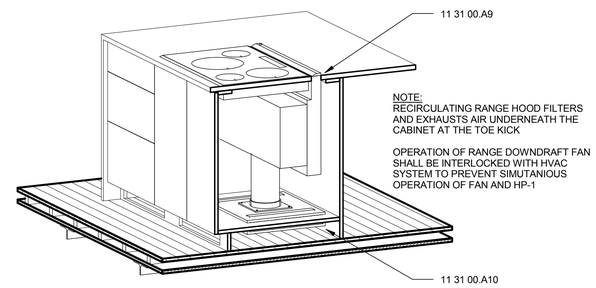


## C4 RECIRCULATING RANGE HOOD

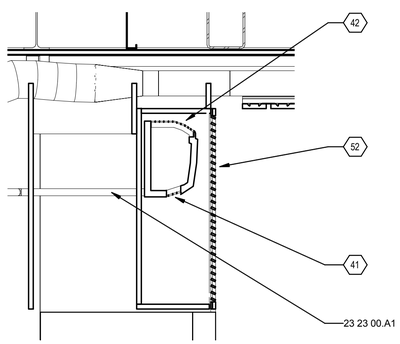


## A1 INDOOR UNIT ONE DETAIL

1" = 1'-0"

0 1/2' 1' 2'

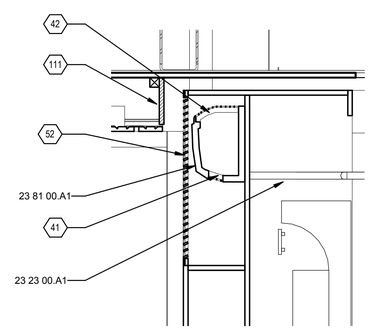


## A4 INDOOR UNIT TWO DETAIL

1" = 1'-0"

0 1/2' 1' 2'

# GENERAL SHEET NOTES

1. REFERENCE SHEET T-101 FOR TRANSMITTER SCHEDULE.

# REFERENCE KEYNOTES

| | |
|---|---|
| 23 23 00.A1 | REFRIGERANT PIPING |
| 23 31 00.A1 | CENTRIFUGAL HVAC FAN |
| 23 81 00.A1 | DUCTLESS MINI-SPLIT INDOOR UNIT, PAINT BLACK |
| 25 11 00.P1 | WALL MOUNTED THERMISTOR |
| 11 31 00.A9 | DOWNDRAFT VENT |
| 11 31 00.A10 | DOWNDRAFT RECIRCULATOR |

# SHEET KEYNOTES

| | |
|---|---|
| 41 | CONDITIONED AIR |
| 42 | INTAKE AIR |
| 52 | ALUMINUM GRILLE, PAINT BLACK. REFERENCE SHEET M-601. PROVIDE WOOD FRAME TO COVER GRILLE FLANGE. ALIGN FACE OF WOOD FRAME WITH SURROUNDING CASEWORK. |
| 111 | BLOCK OFF SPACE ABOVE CEILING FROM MINI-SPLIT UNIT AIR INTAKE. REFERENCE A4/M-501. |
| 115 | EXHAUST DUCT TO PENETRATE EXTERIOR SHEATHING. PROVIDE INSECT SCREEN AND SEAL AT AIR BARRIER. WOOD FACADE PANEL TO HAVE FIELD APPLIED PERFORATION TO ALLOW AIR TO EXHAUST OUT. REFERENCE B1/A-201. |
| 143 | RTD 1, RTD TRANSMITTER 2 AND HT2 LOCATED IN DUCT |

LIVING LIGHT


TEAM NAME: TENNESSEE

ADDRESS: UNIVERSITY OF TENNESSEE
1715 VOLUNTEER BLVD., RM 313
KNOXVILLE, TN 37996

CONTACT: LIVLIGHT@UTK.EDU
HTTP://LIVINGLIGHTUTK.COM

CONSULTANTS

JAMES ROSE ARCHITECT

MALLIA ENGINEERING

ROSS BRYAN ASSOCIATES

RICHARD KELSO

LEON TOLBERT


CLIENT

U.S. DEPARTMENT OF ENERGY

SOLAR DECATHLON 2011

WWW.SOLARDECATHLON.GOV

U.S. DEPARTMENT OF ENERGY SOLAR DECATHLON

| MARK | DATE | DESCRIPTION |
|---|---|---|

| | |
|---|---|
| LOT NUMBER: | 202 |
| DRAWN BY: | SCOTT SEARLE |
| CHECKED BY: | RICHARD KELSO |
| COPYRIGHT: | NONE: PROJECT IS PUBLIC DOMAIN |

SHEET TITLE

MECHANICAL DETAILS

M-501

8/13/2011 10:51:39 AM

## AIR DISTRIBUTION EQUIPMENT SCHEDULE

| MARK | SD-1 | EG-1 | EG-2 | SG-1 | SG-2 |
|---|---|---|---|---|---|
| SERVICE | VENTILATION SUPPLY AIR | VENTILATION EXHAUST AIR | VENTILATION EXHAUST AIR | HEAT PUMP GRILLE COVER | HEAT PUMP GRILLE COVER |
| DESCRIPTION | LINEAR LOUVER DIFFUSER | LINEAR LOUVER DIFFUSER | CUSTOM WOOD PANEL GRILLE | AEROBLADE SUPPLY GRILLE | AEROBLADE SUPPLY GRILLE |
| MATERIAL | ALUMINUM CLEAR ANODIZED | ALUMINUM CLEAR ANODIZED | ECO-CLAD,MATCH ADJ. FINISH | STEEL, PAINTED | STEEL, PAINTED |
| MANUFACTURER | TITUS | TITUS | SUPPLIED BY OWNER | TITUS | TITUS |
| MODEL NO. | LL-1 ONE WAY FRAME TYPE 1A | LL-1 ONE WAY FRAME TYPE 1A | - | 271RL | 271RL |
| SIZE | 8" X 36" | 8" X 24" | 63" X 12" | 38" X 30" | 44" X 26" |

1. REFER TO ARCHITECTURAL DRAWINGS FOR CEILING TYPES AND LOCATIONS

## EQUIPMENT ABBREVIATIONS

| | |
|---|---|
| HP | DUCTLESS MINI-SPLIT HEAT PUMP |
| ERV | ENERGY RECOVERY VENTILATER |
| F | FAN |
| SD | SUPPLY DIFFUSER |
| EG | EXHAUST GRILLE |
| SG | SUPPLY GRILLE |

## MECHANICAL SYMBOLS

| | |
|---|---|
| | DUCT DAMPER |
| | RECTANGULAR DUCT |
| | FLEXIBLE DUCT |
| | DUCT TRANSITION |
| | "T" DUCT DOWN |

## SPLIT SYSTEM HEAT PUMP SCHEDULE

| MARK | HP - 1 | HP - 2 |
|---|---|---|
| COOLING | | |
| COOLING CAPACITY RATED ( MIN. ~ MAX.)<br>AT INDOOR: 80 DEGREE F DB/67 DEGREE F WB<br>OUTDOOR: 95 DEGREE F DB/75 DEGREE F WB | 12,000 (5,300 ~ 15,700) BTU/H | 12,000 (5,300 ~ 15,700) BTU/H |
| AIR FLOW RATE (HI./MED./LOW) | 495/346/240 CFM | 495/346/240 CFM |
| SEER | 22 | 22 |
| HEATING | | |
| HEATING CAPACITY RATED (MIN.~MAX.)<br>AT INDOOR: 70 DEGREE F DB/ 60 DEGREE F WB<br>OUTDOOR: 47 DEGREE F DB/ 43 DEGREE WB | 16,000 (4,400 ~ 19,100) BTU/H | 16,000 (4,400 ~ 19,100) BTU/H |
| AIR FLOW RATE (HI./MED./LOW) | 470/367/272 CFM | 470/367/272 CFM |
| HSPF | 10.55 | 10.55 |
| ELECTRICAL | | |
| ELECTRICAL CHARACTERISTICS | 208-230/1/60 | 208-230/1/60 |
| VOLTAGE / PHASE / Hz. | 208-230/1/60 | 208-230/1/60 |
| RUNNING CURRENT | 0.14 AMPS / 0.15 AMPS | 0.14 AMPS / 0.15 AMPS |
| (COOLING/HEATING) | 4.16 AMPS / 5.49 AMPS | 4.16 AMPS / 5.49 AMPS |
| MINIMUM CIRCUIT AMPS (MCA) | 14.5 AMPS | 14.5 AMPS |
| MAXIMUM FUSE AMPS (MFA) | 15 AMPS | 15 AMPS |
| STARTING CURRENT | 3.6 AMPS | 3.6 AMPS |
| WEIGHT - INDOOR/OUTDOOR | 31/99 lbs | 31/99 lbs |
| DESIGN MANUFACTURER NAME | DAIKIN | DAIKIN |
| INDOOR MODEL NO. | FTXG12HVJU | FTXG12HVJU |
| OUTDOOR MODEL NO. | FRXG12HVJU | FRXG12HVJU |
| CONTROLS | | |
| OPERATING | REMOTE CONTROLLER UNIT | REMOTE CONTROLLER UNIT |

1. PROVIDE ACR COPPER REFRIGERANT TUBING
2. PROVIDE TRAPPED CONDENSATE LINE AND PIPE TO DRAIN
3. PROVIDE 7-YR COMPRESSOR WARRANTY, 1-YR LABOR WARRANTY, 5-YR PARTS WARRANTY
4. PROVIDE WASHABLE FILTERS

## ENERGY RECOVERY VENTILATOR HEATING AND COOLING SCHEDULE

| MARK | ERV |
|---|---|
| MAX SUPPLY AIR FLOW - CFM | 210 |
| MAX EXHAUST AIR FLOW - CFM | 210 |
| EXT. STATIC PRESSURE - IN W.G. | 0.7 |
| SUPPLY FAN - WATTS | 115 |
| EXHAUST FAN - WATTS | 115 |
| HEAT WHEEL DRIVE - WATTS | 20 |
| COOLING MODE | |
| TOTAL RECOVERY EFFECTIVENESS (AT 133 CFM) | 44 |
| ENTERING AIR TEMPERATURE - DB/WB DEGREES F | 95 |
| LEAVING AIR TEMPERATURE - DB/WB DEGREES F | 75 |
| HEATING MODE | |
| SENSIBLE RECOVERY EFFECIENCY (AT 201 CFM) | 81 |
| NET MOISTURE TRANSFER | .55 |
| ENTERING AIR TEMPERATURE - DB DEGREES F | 32 |
| LEAVING AIR TEMPERATURE - DB DEGREES F | 69 |
| ELECTRICAL | |
| VOLTAGE / PHASE / Hz. | 120 / 1 / 60 |
| FUSE 250V/ 3AG SLOW BLOW FUSE | 1/4 AMP |
| WEIGHT - lb. | 72 |
| DESIGN MANUFACTURER | UltimateAir |
| MODEL NUMBER | RecoupAerator 200DX |
| CONTROLS | SEE CONTROL SECTION |

## FAN SCHEDULE

| | |
|---|---|
| MARK | F-1 |
| TYPE | IN-LINE DUCT FAN |
| CFM | 560 |
| SP. - IN W.G. | 0.2 |
| RPM | 3100 |
| WATTS (INPUT) | 196 |
| ELECTRICAL | |
| VOLTAGE | 120 |
| MAX AMPS | 1.96 |
| CONTROL | SEE CONTROL SECTION |
| MANUFACTURER | FANTECH |
| MODEL NO. | FG 10xl |

LIVING LIGHT


TEAM NAME: TENNESSEE

ADDRESS: UNIVERSITY OF TENNESSEE
1715 VOLUNTEER BLVD., RM 313
KNOXVILLE, TN 37996

CONTACT: LIVLIGHT@UTK.EDU
HTTP://LIVINGLIGHTUTK.COM

CONSULTANTS

JAMES ROSE ARCHITECT
MALLIA ENGINEERING
ROSS BRYAN ASSOCIATES
RICHARD KELSO
LEON TOLBERT


CLIENT

U.S. DEPARTMENT OF ENERGY
SOLAR DECATHLON 2011
WWW.SOLARDECATHLON.GOV

U.S. DEPARTMENT OF ENERGY SOLAR DECATHLON

| MARK | DATE | DESCRIPTION |
|---|---|---|

LOT NUMBER: 202
DRAWN BY: DOUGLAS BEASLEY
CHECKED BY: RICHARD KELSO

COPYRIGHT: NONE: PROJECT IS PUBLIC DOMAIN


SHEET TITLE

# MECHANICAL EQUIPMENT SCHEDULE

# M-601

8/13/2011 10:51:41 AM

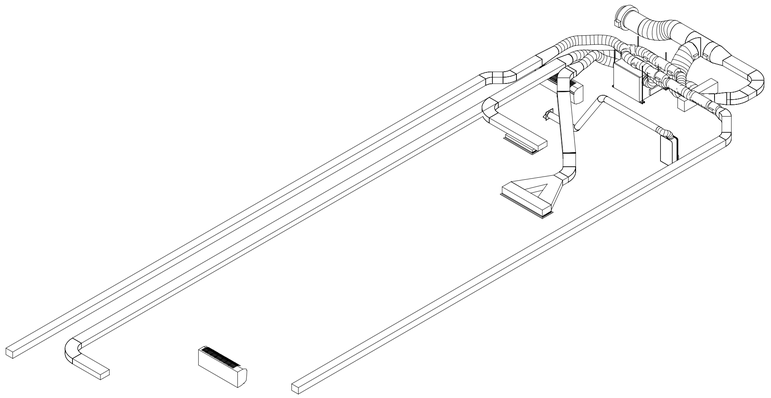

D1 MECHANICAL OVERALL

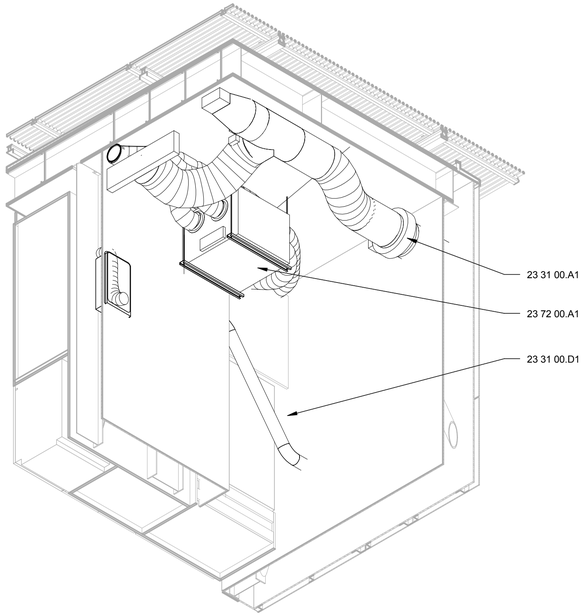


A1 MECHANICAL ROOM ISOMETRIC FROM BELOW

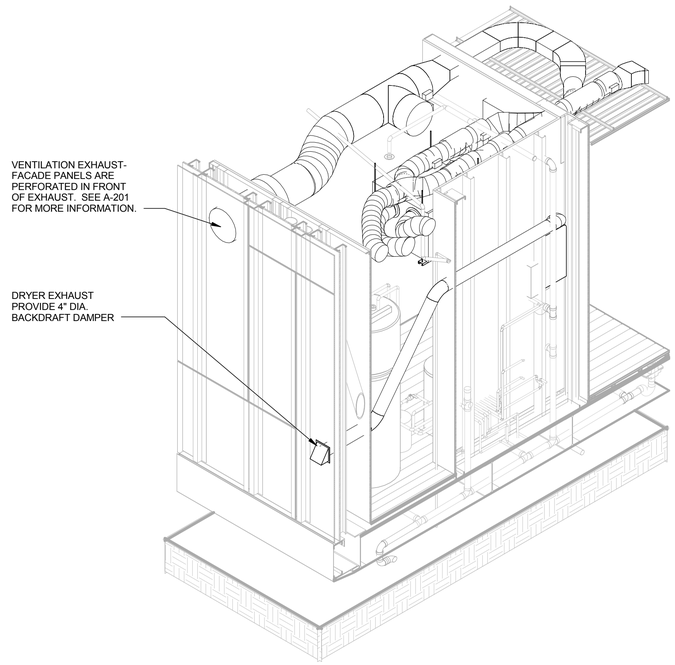


A4 DRYER EXHAUST ISOMETRIC

## GENERAL SHEET NOTES

## REFERENCE KEYNOTES

23 31 00.A1 CENTRIFUGAL HVAC FAN
23 72 00.A1 ENERGY RECOVERY VENTILATOR

## SHEET KEYNOTES

LIVING LIGHT


TEAM NAME: TENNESSEE
ADDRESS: UNIVERSITY OF TENNESSEE
1715 VOLUNTEER BLVD., RM 313
KNOXVILLE, TN 37996
CONTACT: LIVLIGHT@UTK.EDU
HTTP://LIVINGLIGHTUTK.COM


CONSULTANTS

JAMES ROSE ARCHITECT
MALLIA ENGINEERING
ROSS BRYAN ASSOCIATES
RICHARD KELSO
LEON TOLBERT

CLIENT

U.S. DEPARTMENT OF ENERGY
SOLAR DECATHLON 2011
WWW.SOLARDECATHLON.GOV

U.S. DEPARTMENT OF ENERGY SOLAR DECATHLON

| MARK | DATE | DESCRIPTION |
|---|---|---|

LOT NUMBER: 202
DRAWN BY: SCOTT SEARLE
CHECKED BY: RICHARD KELSO
COPYRIGHT: NONE: PROJECT IS PUBLIC DOMAIN

SHEET TITLE

HVAC ISOMETRICS

M-901

8/13/2011 10:51:48 AM

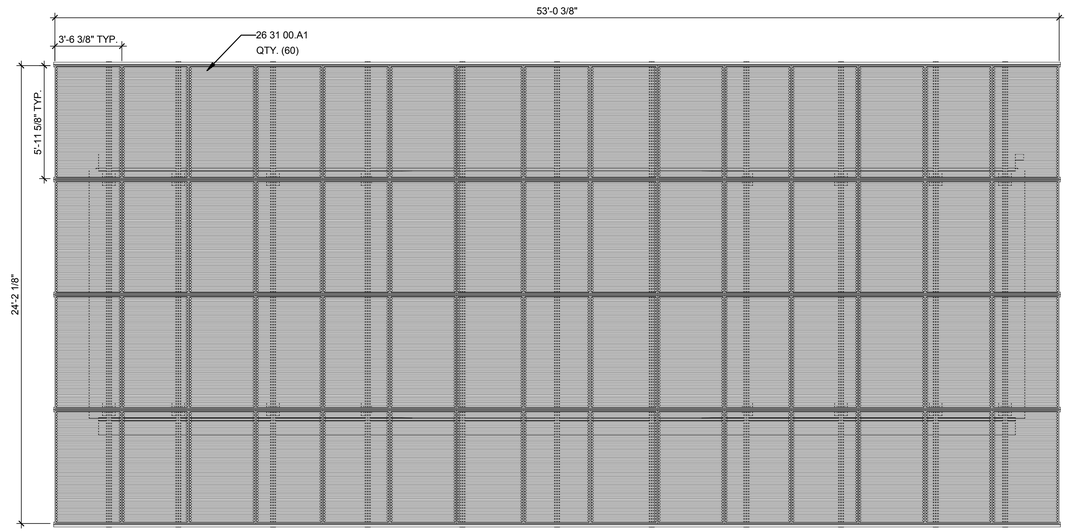


## C1 PHOTOVOLTAIC PLAN

1/4" = 1'-0"

0 2' 4' 8'

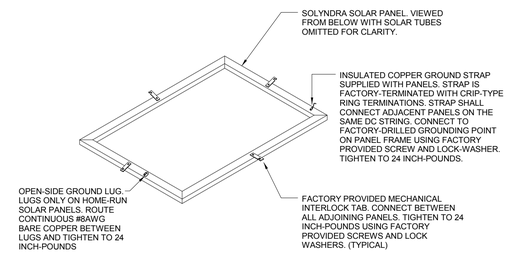


## C5 PV PANEL GROUNDING DETAIL

NOT TO SCALE

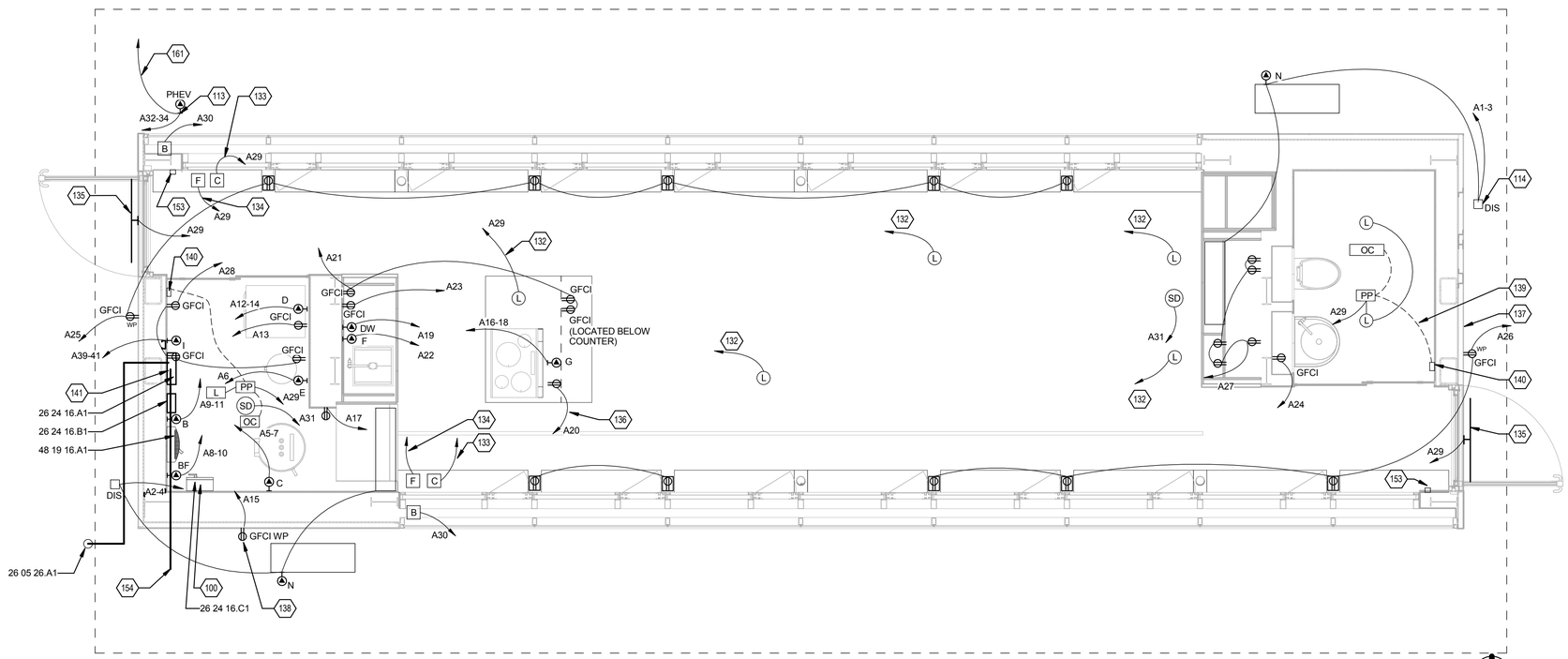


## A1 ELECTRICAL DISTRIBUTION PLAN

3/8" = 1'-0"

0 2' 4' 6'

## GENERAL SHEET NOTES

1. REFERENCE SHEET E-201 FOR LOCATION OF ELECTRICAL EQUIPMENT WITHIN MECHANICAL ROOM.
2. ALL RECEPTACLES SHALL BE TAMPER-RESISTANT.
3. REFERENCE SHEET E-603 FOR ELECTRICAL SYMBOL LEGEND.
4. REFERENCE C1/M-501 FOR LOCATIONS OF HVAC DAMPER ACTUATORS AND HOUSE VENTILATION IN-LINE FAN. CONNECT ACTUATORS AND FAN TO CIRCUIT A30.
5. 'WP' INDICATES THAT EXTERIOR RECEPTACLE SHALL BE PROVIDED WITH A WATERPROOF IN-USE COVER COMPLIANCE WITH NEC 406.8 (B)(1).
6. REFERENCE SHEET E-102 FOR LIGHT FIXTURE SPECIFICATIONS.
7. REFERENCE SHEET G-104 FOR VILLAGE GRID CONNECTION.

## REFERENCE KEYNOTES

| | |
|---|---|
| 26 05 26.A1 | 8' LONG 5/8" DIAMETER ZINC-COATED STEEL GROUNDING ROD |
| 26 24 16.A1 | DISTRIBUTION PANEL |
| 26 24 16.B1 | SOLAR LOAD CENTER |
| 26 24 16.C1 | DC DISCONNECT COMBINER |
| 26 31 00.A1 | PHOTOVOLTAIC COLLECTORS |
| 48 19 16.A1 | INVERTER |

## SHEET KEYNOTES

| | |
|---|---|
| 100 | PV PANEL WIRING THROUGH WEATHERHEAD TO DC DISCONNECT PANELS IN MECHANICAL ROOM BELOW. REFERENCE SHEET E-602 FOR PV PANEL WIRING DIAGRAM. |
| 113 | PROVIDE 3#8, 1#10 GROUND IN 3/4" CONDUIT FROM PANEL TO EXTERIOR OF HOUSE. PROVIDE AND INSTALL NEMA L14-50 TYPE WATERTIGHT TWIST-LOCK RECEPTACLE BELOW DECK LEVEL ON WEST END OF HOUSE. COORDINATE EXACT LOCATION WITH ARCHITECT AND DECKING PLANS. |
| 114 | PROVIDE 3#12, 1#12 GROUND IN 3/4" CONDUIT FROM PANEL TO EXTERIOR OF HOUSE. PROVIDE AND INSTALL NEMA L14-20 TYPE WATERTIGHT TWIST-LOCK RECEPTACLE BELOW DECK LEVEL ON WEST END OF HOUSE. COORDINATE EXACT LOCATION WITH ARCHITECT AND DECK PLANS. |
| 132 | ROUTE TO DEDICATED CHANNEL ON 8-CHANNEL DIMMER FOR CONTROL BY C-BUS NETWORK. REFERENCE SHEET T-601. |
| 133 | ROUTE THOUGH RELAY RA-2 FOR CONTROL BY C-BUS NETWORK. REFERENCE SHEET T-101. |
| 134 | ROUTE THOUGH RELAY RA-3 FOR CONTROL BY C-BUS NETWORK. REFERENCE SHEET T-101. |
| 135 | ROUTE THOUGH RELAY RA-4 FOR CONTROL BY C-BUS NETWORK. REFERENCE SHEET T-101. |
| 136 | REFERENCE SHEET T-601 FOR DOWNDRAFT CONTROL WIRING |
| 137 | CONTRACTOR SHALL PROVIDE 1-1/2" GRS CONDUIT BELOW FLOOR THROUGH EXISTING HOLES IN STEEL FRAME. CONDUIT SHALL EXTEND TO WEST END OF STRUCTURE. |
| 138 | LOCATE BELOW DECKING FOR CONNECTION OF WASTE WATER |
| 139 | CLASS 2 LOW-VOLTAGE WIRING |
| 140 | LOW VOLTAGE PUSHBUTTON WIRED TO POWER PACK RELAY TO PROVIDE MANUAL ON/OFF CONTROL OF ROOM LIGHTING |
| 141 | CURRENT TRANSFORMERS HOUSED INSIDE DISTRIBUTION PANEL |
| 153 | 5-BUTTON DIGITAL LOW VOLTAGE WALL STATION. CONNECT TO C-BUS NETWORK FOR CONTROL OF LIGHTING SYSTEMS. REFERENCE SHEET T-601. AT A MINIMUM, STATION SHALL PROVIDE ONE 'ALL-ON' LIGHTING SCENE AND SHALL ALSO PROVIDE TOGGLE CONTROL OF EXTERIOR LIGHTING FIXTURES. |
| 154 | TO ORGANIZER'S METER LOCATED ON SIDE OF DECK, REFERENCE SHEET G-104. |
| 161 | PROVIDE WEATHER RESISTANT TYPE "SOOW" CORD WITH 2#8, 1#10G CONDUCTORS FROM RECEPTACLE TO PHEV CHARGER. TERMINATE ONE END OF THE CORD TO THE PHEV CHARGER PER MANUFACTURER'S INSTRUCTIONS, TERMINATE THE OTHER END TO A WEATHERPROFF TWISTLOCK PLUG. REFERENCE DRAWINGS A1/L-101 & A1/L-201 FOR PHEV CHARGER LOCATION. |

LIVING LIGHT


TEAM NAME: TENNESSEE

ADDRESS: UNIVERSITY OF TENNESSEE
1715 VOLUNTEER BLVD., RM 313
KNOXVILLE, TN 37996

CONTACT: LIVLIGHT@UTK.EDU
HTTP://LIVINGLIGHTUTK.COM

CONSULTANTS

JAMES ROSE ARCHITECT

MALLIA ENGINEERING

ROSS BRYAN ASSOCIATES

RICHARD KELSO

LEON TOLBERT


CLIENT

U.S. DEPARTMENT OF ENERGY

SOLAR DECATHLON 2011

WWW.SOLARDECATHLON.GOV

U.S. DEPARTMENT OF ENERGY SOLAR DECATHLON

| MARK | DATE | DESCRIPTION |
|---|---|---|

| | |
|---|---|
| LOT NUMBER: | 202 |
| DRAWN BY: | NELEA WALLING |
| CHECKED BY: | LEON TOLBERT |
| COPYRIGHT: | NONE: PROJECT IS PUBLIC DOMAIN |

SHEET TITLE

# ELECTRICAL DISTRIBUTION PLAN

# E-101

8/13/2011 10:45:57 AM

| INTERIOR LIGHTING SCHEDULE | | | | | | |
|---|---|---|---|---|---|---|
| MARK | TYPE | MANUFACTURER | MODEL | WATTAGE | QUANTITY | MOUNTING |
| L1 | 4" INCANDESCENT IC HOUSING WITH LED LAMP | HOUSING: NORA LIGHTING OR EQUAL LAMP: SYLVANIA LED PAR 20 | HOUSING: NS-401QAT WITH NS-42G TRIM LAMP:LED8PAR 20/DIM827/FL36 | 12W / EACH | 5 | RECESSED CEILING |
| L2 | 4' TUBULAR T8 FLUORESCENT | H.E. WILLIAMS | SM76-4-132-120V | 25W / EACH | 16 | CEILING MOUNTED IN ALUMINUM CHANNEL WITH LOUVERED BAFFLE |
| L3 | QUAD-COLOR LED | PIXEL RANGE | DLBK12RGB-0-4' | 2.3W / LF | 16 | FLOOR MOUNTED IN ALUMINUM CHANNEL WITH FROSTED GLASS COVER |
| L4 | LED STRIP | NORA LIGHTING | NUTP2-30 | 50W / EACH | 2 | INTEGRATED INTO AWNING SUPPORT |
| L5 | 4' LINEAR TUBULAR T8 FLOURESCENT | LA MAR | WN-132-E8U | 25W / EACH | 1 | SURFACE MOUNTED |
| L6 | 4" IC LED DOWNLIGHT, WET LOCATION LISTED | NORA LIGHTING | NHIC-4LEDAT WITH NTR-4LED30PP TRIM | 11W / EACH | 2 | RECESSED CEILING |

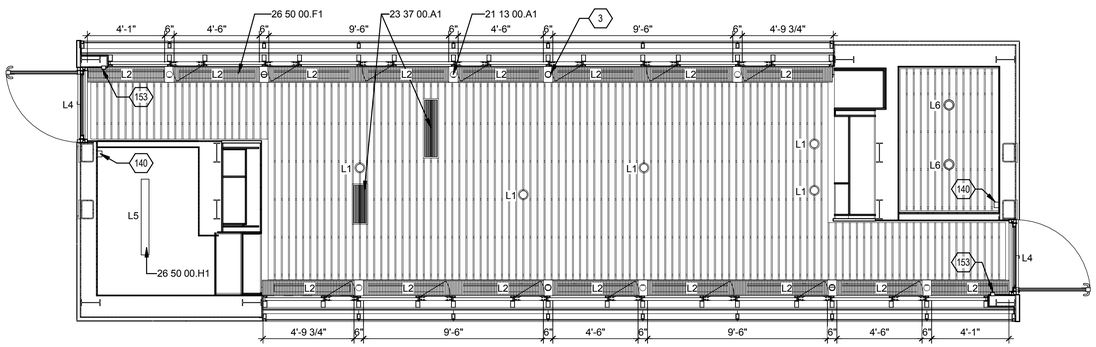


## C-1 LIGHTING REFLECTED CEILING PLAN

1/4" = 1'-0"

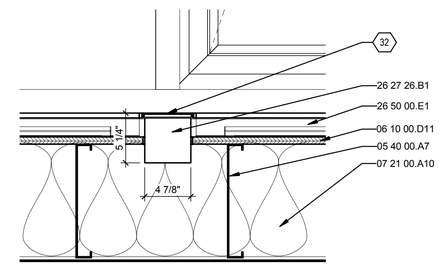


## C-5 RECEPTACLE DETAIL SECTION

1 1/2" = 1'-0"

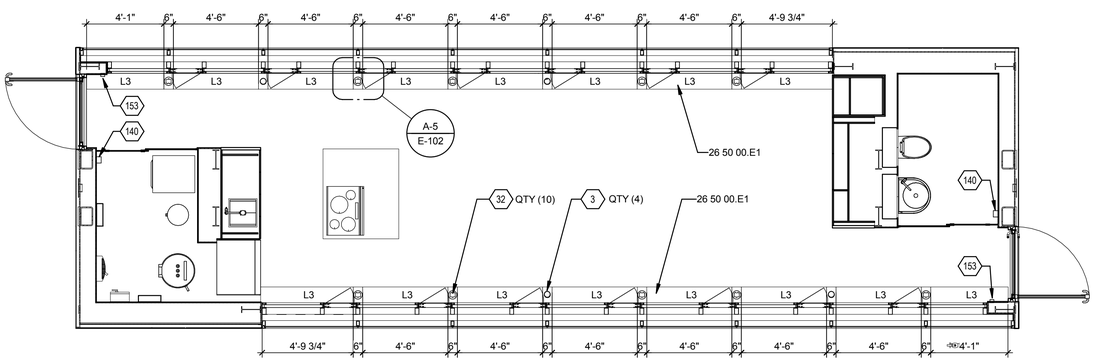


## A-1 LIGHTING FLOOR PLAN

1/4" = 1'-0"

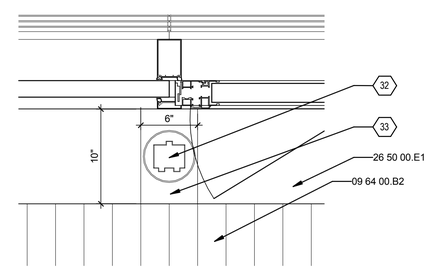


## A-5 RECEPTACLE DETAIL

1 1/2" = 1'-0"

# GENERAL SHEET NOTES

1. REFERENCE SHEET L-101 FOR EXTERIOR LIGHTING SCHEDULE
2. REFERENCE SHEET G-104 FOR CONNECTION TO ORGANIZER PANEL AND LOCATION OF 1" HOLE FOR ORGANIZER'S CABLE
3. REFERENCE SHEET A-111 FOR DIMENSIONED REFLECTED CEILING PLAN.

# REFERENCE KEYNOTES

| | |
|---|---|
| 05 40 00.A7 | 12" "C" JOIST, 16" O.C. |
| 06 10 00.D11 | 3/4" PLYWOOD |
| 07 21 00.A10 | BATT INSULATION |
| 09 64 00.B2 | 3/4" HARDWOOD FLOORING |
| 21 13 00.A1 | CONCEALED SPRINKLER HEAD, 180 DEGREE SPREAD |
| 23 37 00.A1 | DIFFUSER |
| 26 27 26.B1 | RECEPTACLE BOX |
| 26 50 00.E1 | 4' COLOR CHANGE LED LAMP IN 10" WIDE CUSTOM ALUMINUM CHANNEL WITH 1/2" FROSTED TEMPERED GLASS COVER |
| 26 50 00.F1 | 4' TUBULAR FLUORESCENT LAMP IN 10" WIDE CUSTOM ALUMINUM CHANNEL WITH LOUVER BAFFLE |
| 26 50 00.G1 | 5" CAN LIGHT WITH LED LAMP |
| 26 50 00.H1 | 4' LINEAR TUBULAR FLUORESCENT LIGHT FIXTURE |

# SHEET KEYNOTES

| | |
|---|---|
| 3 | STEEL COLUMN, REFERENCE SHEET S-102 |
| 32 | STAINLESS STEEL RECEPTACLE, CENTERED ON ALUMINUM PLATE |
| 33 | CUSTOM ALUMINUM PLATE |
| 140 | LOW VOLTAGE PUSHBUTTON WIRED TO POWER PACK RELAY TO PROVIDE MANUAL ON/OFF CONTROL OF ROOM LIGHTING |
| 153 | 5-BUTTON DIGITAL LOW VOLTAGE WALL STATION. CONNECT TO C-BUS NETWORK FOR CONTROL OF LIGHTING SYSTEMS. REFERENCE SHEET T-601. AT A MINIMUM, STATION SHALL PROVIDE ONE 'ALL-ON' LIGHTING SCENE AND SHALL ALSO PROVIDE TOGGLE CONTROL OF EXTERIOR LIGHTING FIXTURES. |

LIVING LIGHT


TEAM NAME: TENNESSEE

ADDRESS: UNIVERSITY OF TENNESSEE
1715 VOLUNTEER BLVD., RM 313
KNOXVILLE, TN 37996

CONTACT: LIVLIGHT@UTK.EDU
HTTP://LIVINGLIGHTUTK.COM

CONSULTANTS

JAMES ROSE ARCHITECT

MALLIA ENGINEERING

ROSS BRYAN ASSOCIATES

RICHARD KELSO

LEON TOLBERT


CLIENT

U.S. DEPARTMENT OF ENERGY

SOLAR DECATHLON 2011

WWW.SOLARDECATHLON.GOV

U.S. DEPARTMENT OF ENERGY SOLAR DECATHLON

| MARK | DATE | DESCRIPTION |
|---|---|---|

| | |
|---|---|
| LOT NUMBER: | 202 |
| DRAWN BY: | BRENT CASTRO |
| CHECKED BY: | LEON TOLBERT |
| COPYRIGHT: | NONE: PROJECT IS PUBLIC DOMAIN |

SHEET TITLE

LIGHTING PLAN

E-102

8/13/2011 10:46:09 AM

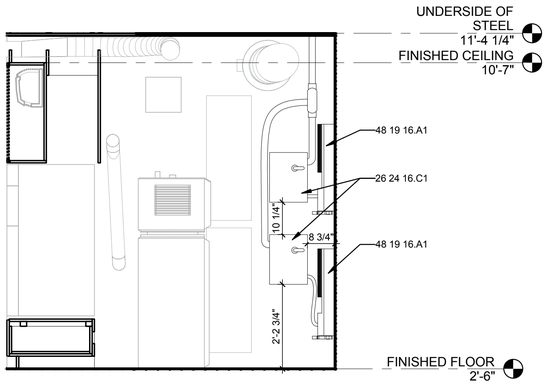


C1 SOUTH INTERIOR ELEVATION
1/2" = 1'-0"
0 1' 2' 4'

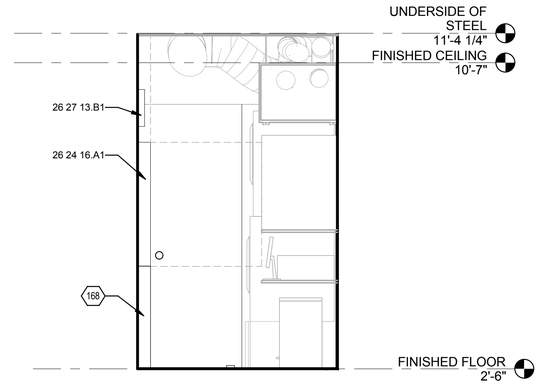


C4 NORTH INTERIOR ELEVATION
1/2" = 1'-0"
0 1' 2' 4'

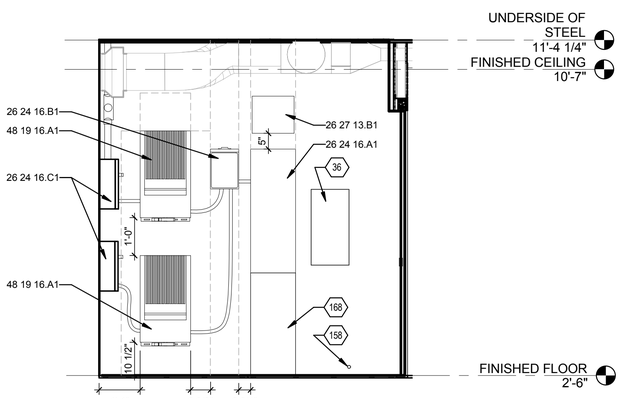


A1 WEST INTERIOR ELEVATION
1/2" = 1'-0"
0 1' 2' 4'

## GENERAL SHEET NOTES

1. DASHED LINES REPRESENT CLEARANCES AROUND EQUIPMENT. ALL ELECTRICAL EQUIPMENT REQUIRE A WORKING CLEARANCE OF 30" WIDE X 36" DEEP. 30" WIDTH NOT REQUIRED TO BE CENTERED ON EQUIPMENT.
2. REFERENCE M-201 FOR MECHANICAL EQUIPMENT AND T-501 FOR CONTROL EQUIPMENT.

## REFERENCE KEYNOTES

| | |
|---|---|
| 26 24 16.A1 | DISTRIBUTION PANEL |
| 26 24 16.B1 | SOLAR LOAD CENTER |
| 26 24 16.C1 | DC DISCONNECT COMBINER |
| 26 27 13.B1 | ENERGY METER |
| 48 19 16.A1 | INVERTER |
| 168 | |

## SHEET KEYNOTES

| | |
|---|---|
| 36 | 12" X 24" CLEAR SPACE FOR ORANIZERS ENCLOSURE FOR NET PV PRODUCTION METER |
| 158 | 1" CONDUIT THROUGH EXTERIOR WALL TO ALLOW FOR ORGANIZER'S CABLE. ACCESSIBLE PRIOR TO EXTERIOR FACADE PANEL INSTALLATION. REFERENCE A5/T-501. |
| 168 | METAL PANEL BUILD OUT TO EXTEND FROM DISTRIBUTION PANEL TO FLOOR |

LIVING LIGHT


TEAM NAME: TENNESSEE
ADDRESS: UNIVERSITY OF TENNESSEE
1715 VOLUNTEER BLVD., RM 313
KNOXVILLE, TN 37996
CONTACT: LIVLIGHT@UTK.EDU
HTTP://LIVINGLIGHTUTK.COM

CONSULTANTS
JAMES ROSE ARCHITECT
MALLIA ENGINEERING
ROSS BRYAN ASSOCIATES
RICHARD KELSO
LEON TOLBERT


CLIENT
U.S. DEPARTMENT OF ENERGY
SOLAR DECATHLON 2011
WWW.SOLARDECATHLON.GOV

U.S. DEPARTMENT OF ENERGY SOLAR DECATHLON

| MARK | DATE | DESCRIPTION |
|---|---|---|

| | |
|---|---|
| LOT NUMBER: | 202 |
| DRAWN BY: | A. RICHARDS |
| CHECKED BY: | LEON TOLBERT |
| COPYRIGHT: | NONE: PROJECT IS PUBLIC DOMAIN |

SHEET TITLE
ELECTRICAL CLOSET ELEVATIONS

E-201

8/13/2011 10:46:13 AM

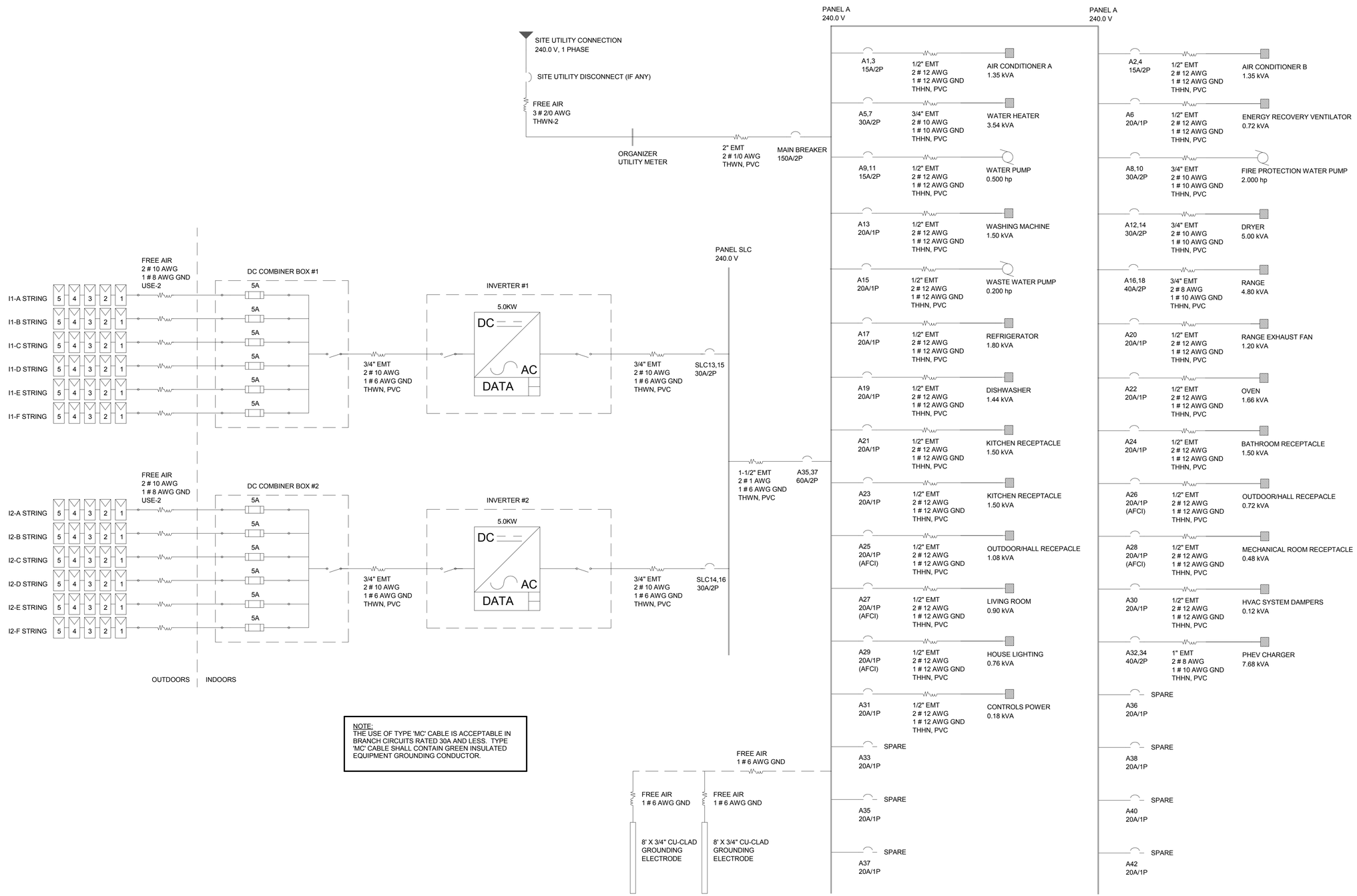


NOTE:
THE USE OF TYPE 'MC' CABLE IS ACCEPTABLE IN BRANCH CIRCUITS RATED 30A AND LESS. TYPE 'MC' CABLE SHALL CONTAIN GREEN INSULATED EQUIPMENT GROUNDING CONDUCTOR.

A1 ONE LINE DIAGRAM

8/13/2011 10:46:16 AM

LIVING LIGHT

| | |
|---|---|
| TEAM NAME: | TENNESSEE |
| ADDRESS: | UNIVERSITY OF TENNESSEE<br>1715 VOLUNTEER BLVD., RM 313<br>KNOXVILLE, TN 37996 |
| CONTACT: | LIVLIGHT@UTK.EDU<br>HTTP://LIVINGLIGHTUTK.COM |

CONSULTANTS

JAMES ROSE ARCHITECT
MALLIA ENGINEERING
ROSS BRYAN ASSOCIATES
RICHARD KELSO
LEON TOLBERT

CLIENT

U.S. DEPARTMENT OF ENERGY
SOLAR DECATHLON 2011
WWW.SOLARDECATHLON.GOV

U.S. DEPARTMENT OF ENERGY SOLAR DECATHLON

| MARK | DATE | DESCRIPTION |
|---|---|---|

| | |
|---|---|
| LOT NUMBER: | 202 |
| DRAWN BY: | JOHN HAND |
| CHECKED BY: | LEON TOLBERT |
| COPYRIGHT: | NONE: PROJECT IS PUBLIC DOMAIN |

SHEET TITLE

ONE-LINE DIAGRAM

E-601

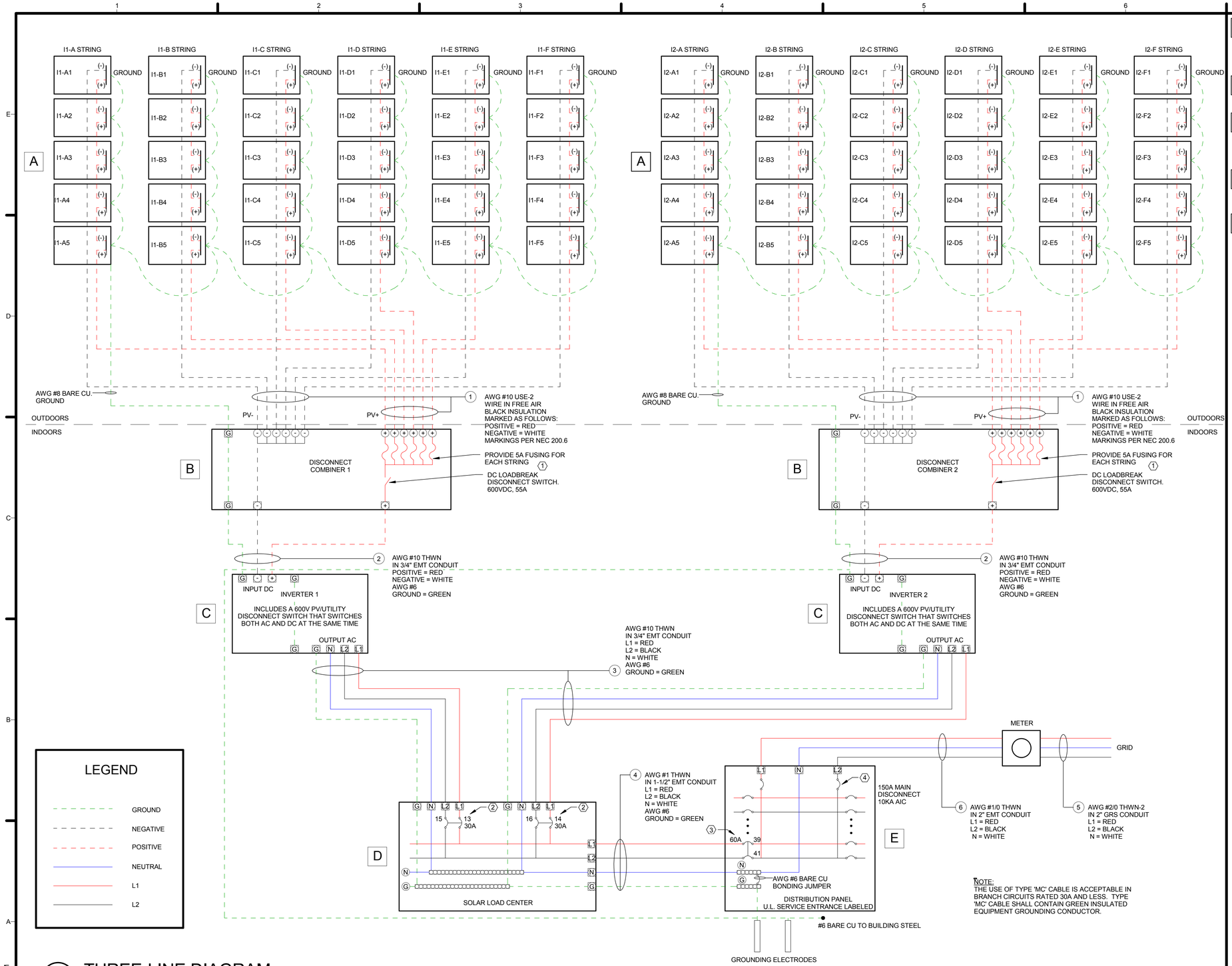


NOTE:
THE USE OF TYPE 'MC' CABLE IS ACCEPTABLE IN BRANCH CIRCUITS RATED 30A AND LESS. TYPE 'MC' CABLE SHALL CONTAIN GREEN INSULATED EQUIPMENT GROUNDING CONDUCTOR.

A1 THREE-LINE DIAGRAM

8/13/2011 10:46:19 AM

**A** PV ARRAY:
SOLYNDRA SL-001-182 MODULE (QTY 60)
STC VALUES: Voc = 96.7 V Isc = 2.76 V
MAX SYSTEM VOLTAGE = 600 V
MAX SERIES FUSE = 23 A
U.L. LISTED

**B** DISCONNECT COMBINER (QTY. 2):
SOLARBOS CS55-06-05-N3
55A 600VDC RATED, NEMA 3R ENCLOSURE

**C** GRID TIE INVERTER (QTY. 2):
XANTREX GT-5.0-NA-240/208
MAX DC INPUT: 600 VDC
RATED OUTPUT POWER AT 240V NOMINAL: 5000W
RATED OUTPUT CURRENT AT 240V NOMINAL: 21 A
AIC RATING = 10 kAIC

**D** SOLAR LOAD CENTER:
SQUARE D HOM16321200TC WITH
(2) INDEPENDENT 30A DOUBLE POLE BREAKERS
150A 240VAC RATED

**E** LOAD CENTER:
SQUARE D HOM42M225C
225A RATED

OVERCURRENT DEVICE CALCULATIONS

(1) STRING FUSES
ISC = 2.76A DC
2.76A X 124% X 125% = 4.31A
SELECT 5A FUSES

(2) INVERTER BREAKERS
MAX INVERTER OUTPUT = 5000VA
5000VA / 240V = 20.83A
20.83A X 125% = 26.04A
ROUND UP TO NEXT STANDARD BREAKER PER 240.6
SELECT 30A BREAKER

(3) MAIN SOLAR BACKFEED BREAKER
MAX OUPUT FROM (2) INVERTERS = 10000VA
10000VA / 240V = 41.67A
41.67A X 125% = 52.09A
ROUND UP TO NEXT STANDARD BREAKER PER 240.6
SELECT 60A BREAKER

(4) REFER TO SERVICE LOAD STUDY ON E-603

WIRE CALCULATIONS

(1) CONDUCTOR MUST BE SIZED FOR
2.76A X 1.25 X 1.25 = 4.31A
AWG #10 USE-2 (90 DEGREE C) WIRE IS RATED AT
55 X 0.58 = 31.9A (IN FREE AIR)
61-70 DEGREE C AMBIENT (OUTDOORS)
(TEMPERATURE CORRECTION FACTOR INCLUDED)

(2) SIZE CONDUCTORS BASED ON 6 STRINGS, Isc = 2.76A DC
26-30 DEGREE C AMBIENT (INDOORS)
2.76A X 125% X 125% = 25.88A
AWG #10 THWN (60 DEGREE C) WIRE IS RATED AT
30A X 1.0 = 30A (IN RACEWAY)
(TEMPERATURE CORRECTION FACTOR INCLUDED)

(3) SIZE CONDUCTORS BASED ON 30A OVERCURRENT
26-30 DEGREE C AMBIENT (INDOORS)
AWG #10 THWN (60 DEGREE C) WIRE IS RATED AT
30A X 1.0 = 30A (IN RACEWAY)
(TEMPERATURE CORRECTION FACTOR INCLUDED)

(4) SIZE CONDUCTORS BASED ON 100.00A MIN. AMPACITY
26-30 DEGREE C AMBIENT (INDOORS)
AWG #1 THWN (60 DEGREE C) WIRE IS RATED AT
110A X 1.0 = 110A (IN RACEWAY)
(TEMPERATURE CORRECTION FACTOR INCLUDED)
(60 DEGREE C INSULATION USED IN ACCORDANCE WITH 110.14)

(5) SIZE CONDUCTORS BASED ON 150A SERVICE
36-40 DEGREE C AMBIENT (INDOORS)
AWG #2/0 THWN-2 (75 DEGREE C) WIRE IS RATED AT
175A X 0.88 = 154.0A (IN RACEWAY)
(TEMPERATURE CORRECTION FACTOR INCLUDED)

(6) SIZE CONDUCTORS BASED ON 150A SERVICE
26-30 DEGREE C AMBIENT (INDOORS)
AWG #1/0 THWN (75 DEGREE C) WIRE IS RATED AT
150A X 1.0 = 150A (IN RACEWAY)
(TEMPERATURE CORRECTION FACTOR INCLUDED)

NEC 690.64(B)(2) CALCULATIONS

PANEL A:
BUS RATING = 225A
MAX BUS INPUT CONNECTIONS: 225A x 1.2 = 270A
150A MAIN + 70A SOLAR = 220A < 270A
SOLAR LOAD CENTER:
BUS RATING = 150A
MAX BUS INPUT CONNECTION: 150A x 1.2 = 180A
70A MAIN + (2) 30A SOLAR = 130A < 180A
TYPE 4 CONDUCTORS:
60A MAIN + (2) 30A SOLAR = 120A
MINIMUM CONDUCTOR SIZE: 120A / 1.2 = 100.00A

MAX DC STRING VOLTAGE

NEC 690.7 CALCULATION:

LOWEST RECORDED TEMP. IN DC: -26 DEGREES C
LOWEST RECORDED TEMP. IN TN: -36 DEGREES C
SOLYNDRA TEMP COEFFICIENT: -0.29%/DEGREES C
-36 DEGREES C -25 DEGREES C = -61 DEGREES C
-61 DEGREES C X -0.29% / DEGREES C = 17.69%
(Voc x 117.69%) x 5 PANELS / STRING = Vmax
(96.7 x 1.1769) x 5 = 569.0 VDC

LIVING LIGHT


TEAM NAME: TENNESSEE
ADDRESS: UNIVERSITY OF TENNESSEE
1715 VOLUNTEER BLVD., RM 313
KNOXVILLE, TN 37996
CONTACT: LIVLIGHT@UTK.EDU
HTTP://LIVINGLIGHTUTK.COM

CONSULTANTS
JAMES ROSE ARCHITECT
MALLIA ENGINEERING
ROSS BRYAN ASSOCIATES
RICHARD KELSO
LEON TOLBERT


CLIENT
U.S. DEPARTMENT OF ENERGY
SOLAR DECATHLON 2011
WWW.SOLARDECATHLON.GOV

U.S. DEPARTMENT OF ENERGY SOLAR DECATHLON

| MARK | DATE | DESCRIPTION |
|---|---|---|

LOT NUMBER: 202
DRAWN BY: JOHN CALVERT
CHECKED BY: LEON TOLBERT
COPYRIGHT: NONE: PROJECT IS PUBLIC DOMAIN

SHEET TITLE
THREE-LINE DIAGRAM

E-602

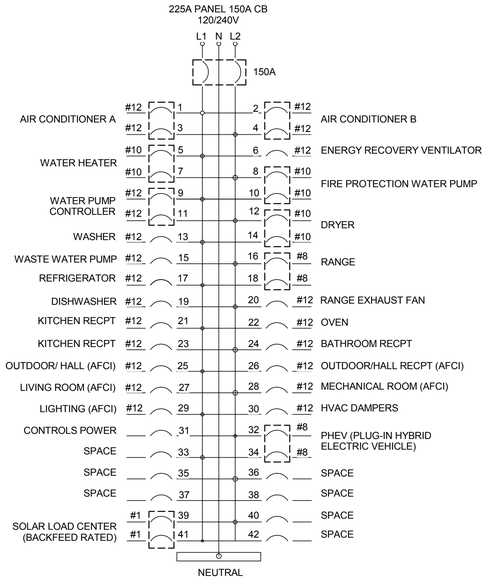


MAIN SERVICE PANEL

| PANEL | | | VOLTAGE | | | | PHASE | | WIRES | | | | MAINS | | |
|---|---|---|---|---|---|---|---|---|---|---|---|---|---|---|---|
| A | | | 120V / 240V | | | | SINGLE PHASE | | 3 WIRES | | | | 150A MAINS, 225A BUS | | |
| CIRCUIT NUMBER | DESCRIPTION | RATING | POLES | WIRE SIZE (THHN) | GROUND SIZE (THHN) | LOAD (AMPS) | A (kVA) | B (kVA) | LOAD (AMPS) | WIRE SIZE (THHN) | GROUND SIZE (THHN) | POLES | RATING | DESCRIPTION | CIRCUIT NUMBER |
| 1 | AIR CONDITIONER A | 15 | 2 | 12 | 12 | 5.64 | 1.35 | | 5.64 | 12 | 12 | 2 | 15 | AIR CONDITIONER B | 2 |
| 3 | | | | | | | | 1.35 | | | | | | | 4 |
| 5 | WATER HEATER | 30 | 2 | 10 | 10 | 14.75 | 2.49 | | 6 | 12 | 12 | 1 | 20 | ENERGY RECOVERY VENTILATOR | 6 |
| 7 | | | | | | | | 2.37 | 5 | 10 | 10 | 2 | 30 | FIRE PROTECTION WATER PUMP | 8 |
| 9 | WATER PUMP CONTROLLER | 15 | 2 | 12 | 12 | 4.9 | 1.19 | | | | | | | | 10 |
| 11 | | | | | | | | 3.08 | 20.8 | 10 | 10 | 2 | 30 | DRYER | 12 |
| 13 | WASHING MACHINE | 20 | 1 | 12 | 12 | 12.5 | 4.00 | | | | | | | | 14 |
| 15 | WASTE WATER PUMP | 20 | 1 | 12 | 12 | 7.2 | | 3.26 | 20 | 8 | 10 | 2 | 40 | RANGE | 16 |
| 17 | REFRIGERATOR | 20 | 1 | 12 | 12 | 15 | 4.20 | | | | | | | | 18 |
| 19 | DISHWASHER | 20 | 1 | 12 | 12 | 12 | | 2.64 | 10 | 12 | 12 | 1 | 20 | RANGE EXHAUST FAN | 20 |
| 21 | KITCHEN RECPT | 20 | 1 | 12 | 12 | 12.5 | 3.16 | | 13.8 | 12 | 12 | 1 | 20 | OVEN | 22 |
| 23 | KITCHEN/RECPT | 20 | 1 | 12 | 12 | 12.5 | | 3.00 | 12.5 | 12 | 12 | 1 | 20 | BATHROOM RECPT | 24 |
| 25 | OUTDOOR/ HALL RECPT (AFCI) | 20 | 1 | 12 | 12 | 9 | 1.80 | | 6 | 12 | 12 | 1 | 20 | OUTDOOR/HALL RECPT (AFCI) | 26 |
| 27 | LIVING ROOM (AFCI) | 20 | 1 | 12 | 12 | 7.5 | | 1.38 | 4 | 12 | 12 | 1 | 20 | MECHANICAL ROOM RECPT (AFCI) | 28 |
| 29 | LIGHTING (AFCI) | 20 | 1 | 12 | 12 | 6.3 | 0.88 | | 1 | 12 | 12 | 1 | 10 | HVAC DAMPERS | 30 |
| 31 | CONTROLS POWER | 20 | 1 | 12 | 12 | 1.5 | | 4.02 | 32 | 8 | 10 | 2 | 40 | PHEV | 32 |
| 33 | SPACE | | | | | | 3.84 | | | | | | | | 34 |
| 35 | SPACE | | | | | | | 0.00 | | | | | | SPACE | 36 |
| 37 | SPACE | | | | | | 0.00 | | | | | | | SPACE | 38 |
| 39 | SOLAR LOAD CENTER (BACKFEED RATED) | 60 | 2 | 1 | 6 | 33 | | --- | | | | | | SPACE | 40 |
| 41 | | | | | | | --- | | | | | | | SPACE | 42 |

NOTE:
THE CONTRACTOR SHALL PROVIDE ANY REQUIRED LUG ADAPTERS TO ALLOW CONNECTION OF #1 AWG TO BREAKER A39,41

TOTALS:
A (kVA) B (kVA)
22.90 21.11
TOTAL CONNECTED LOAD
44.01 kVA 183.38 A

FLOOR MOUNTED DUPLEX RECEPTACLE OUTLET, TAMPER RESISTANT

DUPLEX RECEPTACLE OUTLET, TAMPER RESISTANT

WP WATER PROOF RECEPTACLE, TAMPER RESISTANT

L CAN LIGHT

L LINEAR FLUORESCENT LIGHT

F FLOOR LIGHT TROUGH. PROVIDE CONNECTION TO (8) FIXTURES IN LIGHT TROUGH

C CEILING LIGHT TROUGH. PROVIDE CONNECTION TO (8) IN LIGHT TROUGH

T EXTERIOR AWNING LIGHT

PP LINE VOLTAGE RELAY / POWER PACK

OC OCCUPANCY SENSOR

B LOUVER BLINDS MOTOR, PROVIDE CONNECTION TO (8) MOTORS

B WATER PUMP CIRCUIT

C WATER HEATER

G COUNTER-MOUNTED COOKING UNIT

F WALL MOUNTED OVEN

DW DISHWASHER 120V

I INVERTER

BF FIRE PROTECTION WATER PUMP

D DRYER

PHEV PLUG-IN HYBRID ELECTRIC VEHICLE

N AIR CONDITIONER

SIZING OF SERVICE-ENTRANCE CONDUCTORS AND SERVICE MEANS

1. GENERAL LIGHTING LOADS
700ftsq @ 3 VA PER FTsq = 2100 VA

2. LIGHTING BRANCH CIRCUITS
(2100 VA / 120V) = 17.5 A => 1 X 20 AMP BRANCH CIRCUIT

3. OTHER RECEPTACLE CIRCUITS
SMALL APPLIANCE CIRCUITS: 2 @ 1500 VA = 3000 VA
LAUNDRY CIRCUIT: 1 @ 1500 VA = 1500 VA
BEDROOM: 1 @ 1500 VA = 1500 VA
4 CIRCUITS 6000 VA

4. OTHER LOADS
RANGE: 1 @ 5000 VA = 5000 VA
WALL OVEN: 1 @ 1500 VA = 1500 VA
CLOTHES DRYER: 1 @ 5000 VA = 5000 VA
125% OF WATER PUMP: 1 @ 1200 VA = 1500 VA
WATER HEATER: 1 @ 3500 VA = 3500 VA
PHEV CHARGER: 1 @ 7680 VA = 7680 VA
ENERGY RECOVERY VENTILATOR: 1 @ 720 VA = 720 VA
RANGE EXHAUST FAN: 1 @ 1200 VA = 1200 VA
WASTE WATER PUMP: 1 @ 864 VA = 864 VA
26964 VA

5. 1 + 3 + 4 = 35064 VA = 35.1 kVA
10 kVA @ 100% = 10 kVA
(35.1 kVA - 10kVA) @ 40% = 10.03 kVA
20.03 kVA

6. AIR CONDITIONING
HEAT PUMP: 2 @ 5.64 FLA, 240V = 2710 VA

7. 5 + 6 = 22736 VA
22736 VA / 240V = 94.7A
MINIMUM SERVICE SIZE IS 100A
PER NEC 230.79
SELECT 150A SERVICE SIZE

8. UNGROUNDED CONDUCTOR SIZE
SELECT FROM 310.16, USE TYPE THWN-2, 75 DEGREES C
DERATE FOR EXPOSED ON-GRADE CONDUCTORS
40 DEGREE C AMBIENT => 0.88 CORRECTION FACTOR
175A X 0.88 = 154A > 150A
SELECT #2/0 THWN-2

WHERE CONCEALED INSIDE STRUCTURE USE
30 DEGREE C AMBIENT
ALLOW #1/0 THWN

9. CALCULATION OF NEUTRAL CURRENT
700 SQFT @ 3 VA / SQFT = 2100 VA
4 CIRCUITS @ 1500 VA = 6000 VA
8100 VA

3000 VA @ 100% = 3000 VA
8100 VA - 3000 VA @ 40% = 2040 VA
5040 VA

1 WALL OVEN @ 1500 VA
1 RANGE @ 5000 VA
6500 VA

TABLE 220.55 ALLOWS 75% DEMAND FACTOR
6500 VA X 0.75 = 4875 VA

OVENS & COOKTOP X 0.7 FOR NEUTRAL LOAD = 3415 VA
DRYER X 0.7 FOR NEUTRAL LOAD = 3500 VA

TOTAL NEUTRAL LOAD = 11955 VA
19555 VA / 240V = 49.8A

SELECT NEUTRAL CONDUCTOR FROM 310.16
USE THWN-2, 75 DEGREES C
DERATE FOR EXPOSED => 0.88 CORRECTION FACTOR
MIN. CONDUCTOR: #6 AWG
SELECT FULL SIZE NEUTRAL: #2/0
ALLOW #1/0 THWN INDOORS

10. GROUNDING ELECTRODE CONDUCTOR
SELECT FROM 255.66 BASED ON #2/0 COPPER
SELECT #6 COPPER GROUND

11. CONDUIT TRADE SIZE
SIZE PER TABLE C.8, SELECT 2"

12. BREAKER SIZE = 150A

NOTE:
THE USE OF TYPE 'MC' CABLE IS ACCEPTABLE IN BRANCH CIRCUITS RATED 30A AND LESS. TYPE 'MC' CABLE SHALL CONTAIN GREEN INSULATED EQUIPMENT GROUNDING CONDUCTOR.

LIVING LIGHT

TEAM NAME: TENNESSEE
ADDRESS: UNIVERSITY OF TENNESSEE
1715 VOLUNTEER BLVD., RM 313
KNOXVILLE, TN 37996
CONTACT: LIVLIGHT@UTK.EDU
HTTP://LIVINGLIGHTUTK.COM

CONSULTANTS
JAMES ROSE ARCHITECT
MALLIA ENGINEERING
ROSS BRYAN ASSOCIATES
RICHARD KELSO
LEON TOLBERT

CLIENT
U.S. DEPARTMENT OF ENERGY
SOLAR DECATHLON 2011
WWW.SOLARDECATHLON.GOV

U.S. DEPARTMENT OF ENERGY SOLAR DECATHLON

| MARK | DATE | DESCRIPTION |
|---|---|---|

LOT NUMBER: 202
DRAWN BY: JOHN HAND
CHECKED BY: LEON TOLBERT
COPYRIGHT: NONE: PROJECT IS PUBLIC DOMAIN

SHEET TITLE
PANEL AND ELECTRICAL SCHEDULES

E-603

8/13/2011 10:46:22 AM

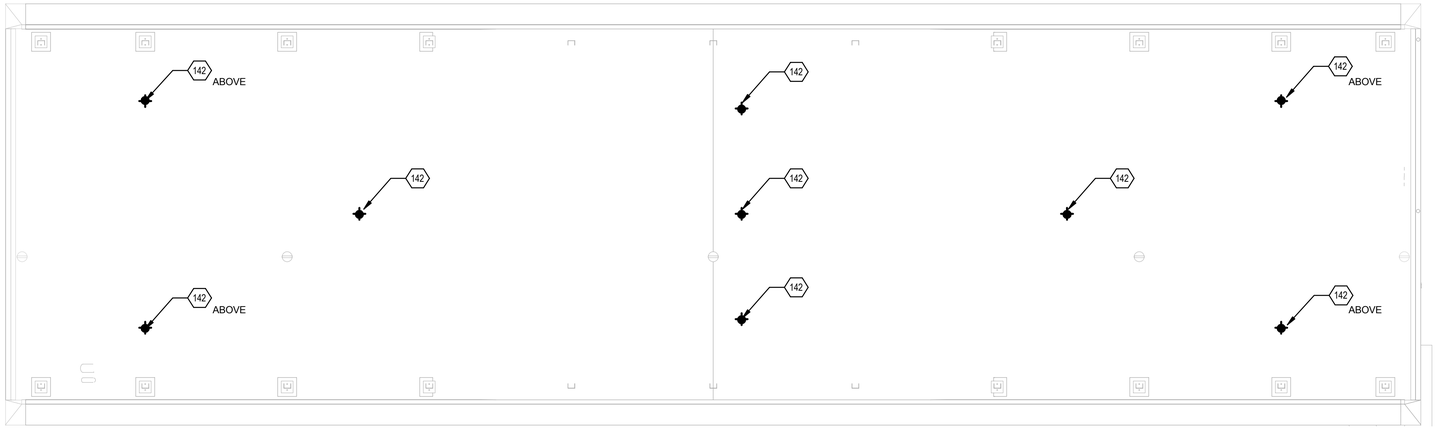


B1 BUILDING CONTROLS LOCATIONS (ROOF PLAN)
3/8" = 1'-0"

0 2' 4' 6'

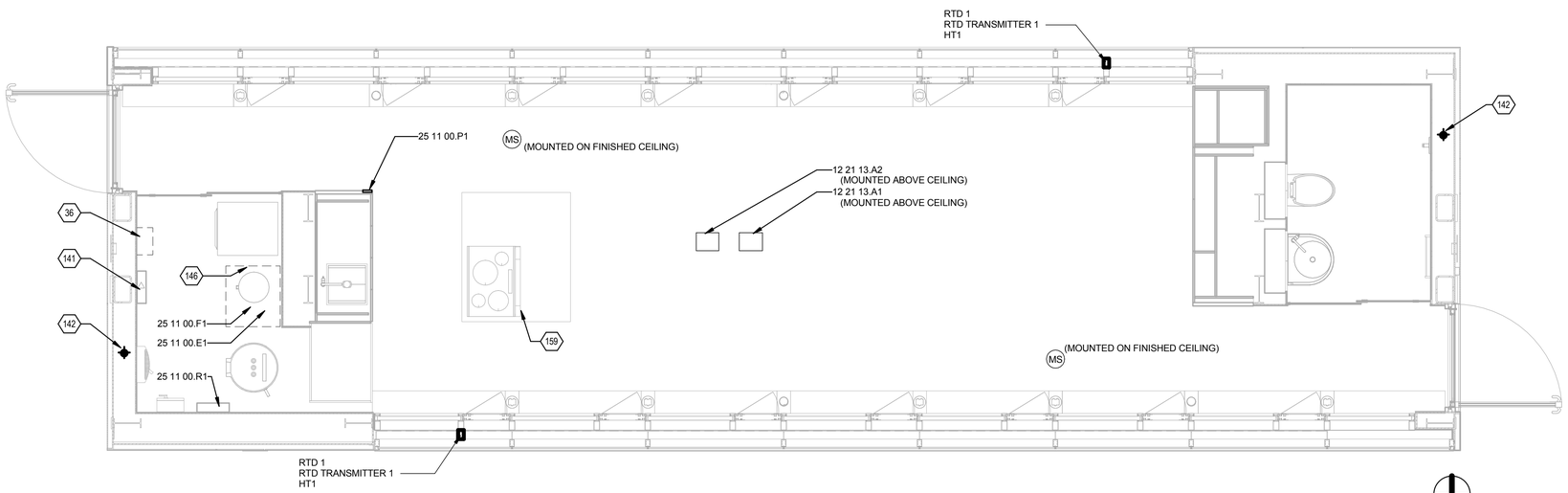


A1 BUILDING CONTROLS LOCATIONS (FLOOR PLAN)
3/8" = 1'-0"

0 2' 4' 6'

## GENERAL SHEET NOTES

1. REFERENCE C1/M-501 FOR MECHANICAL CONTROLS
2. REFERENCE G-104 FOR INTERCONNECTION PLAN

## REFERENCE KEYNOTES

| | |
|---|---|
| 12 21 13.A1 | UNIVERSAL RTS INTERFACE |
| 12 21 13.A2 | RTS REPEATER |
| 25 11 00.E1 | COMPUTER MONITOR |
| 25 11 00.F1 | CPU |
| 25 11 00.P1 | WALL MOUNTED THERMISTOR |
| 25 11 00.R1 | DIN RAIL ENCLOSURE |

## SHEET KEYNOTES

| | |
|---|---|
| 36 | 12" X 24" CLEAR SPACE FOR ORANIZERS ENCLOSURE FOR NET PV PRODUCTION METER |
| 141 | CURRENT TRANSFORMERS HOUSED INSIDE DISTRIBUTION PANEL |
| 142 | LOCATION OF RTD RESISTANCE THERMOMETER, RTD TRANSMITTER AND TRANSDUCER. REFERENCE C1/T-501, C3/T-501 AND C5/T-501 |
| 146 | COMPETITION ORGANIZER DATALOGGER AND ENCLOSURE |
| 159 | INTERLOCK DOWNDRAFT WIRING WITH #22 AWG WIRE RUN TO GENERAL INPUT ON DIN RAIL, REFERENCE SHEET T-601 |

LIVING LIGHT


TEAM NAME: TENNESSEE

ADDRESS: UNIVERSITY OF TENNESSEE
1715 VOLUNTEER BLVD., RM 313
KNOXVILLE, TN 37996

CONTACT: LIVLIGHT@UTK.EDU
HTTP://LIVINGLIGHTUTK.COM


CONSULTANTS

JAMES ROSE ARCHITECT
MALLIA ENGINEERING
ROSS BRYAN ASSOCIATES
RICHARD KELSO
LEON TOLBERT

CLIENT

U.S. DEPARTMENT OF ENERGY
SOLAR DECATHLON 2011
WWW.SOLARDECATHLON.GOV

U.S. DEPARTMENT OF ENERGY SOLAR DECATHLON

| MARK | DATE | DESCRIPTION |
|---|---|---|

| | |
|---|---|
| LOT NUMBER: | 202 |
| DRAWN BY: | CHRIS BOEHME |
| CHECKED BY: | MATTHEW BERWIND |
| COPYRIGHT: | NONE: PROJECT IS PUBLIC DOMAIN |

SHEET TITLE

BUILDING CONTROLS PLAN

T-101

8/13/2011 10:55:28 AM

| TRANSMITTER SCHEDULE | | | | | |
|---|---|---|---|---|---|
| MARK | MEASUREMENT | LOCATION | MAKE | MODEL | USE |
| RTD TRANSMITTER 1 | TEMPERATURE | DOUBLE FACADE | VERIS | AA10F7 | - |
| RTD TRANSMITTER 2 | TEMPERATURE | DUCT | VERIS | AA10F7 | - |
| RTD TRANSMITTER 3 | TEMPERATURE | WALL/ROOF | VERIS | AA10F7 | POST COMPETITION RESEARCH |
| RTD TRANSMITTER 4 | TEMPERATURE | PV SURFACE | VERIS | AA10F7 | POST COMPETITION RESEARCH |
| HT 1 | RELATIVE HUMIDITY | DOUBLE FACADE | VERIS | HWX2SX | - |
| HT 2 | RELATIVE HUMIDITY | DUCT | VERIS | DHD5XMSTA1 | - |

| SENSOR SCHEDULE | | | | | | |
|---|---|---|---|---|---|---|
| MARK | MEASUREMENT | LOCATION | QUANTITY | MAKE | MODEL | USE |
| RTD 1 | TEMPERATURE | DOUBLE FACADE/DUCT | 6 | VERIS | TRAB0 | - |
| RTD 2 | TEMPERATURE | WALL/ROOF/PV SURFACE | 25 | VERIS | TRAB0 | POST COMPETITION RESEARCH |
| HFT | HEAT FLUX | WALL/ROOF | 7 | CONCEPT ENGINEERING | F-002-4 | POST COMPETITION RESEARCH |
| OC | OCCUPANCY | BATHROOM/MECH. ROOM CEILING | 2 | SCHNEIDER ELECTRIC | SLSCPS1000 | - |
| MS | LIGHT LEVEL/OCCUPANCY | LIVING SPACE CEILING | 2 | SCHNEIDER ELECTRIC | PIR MULTI SENSOR | - |

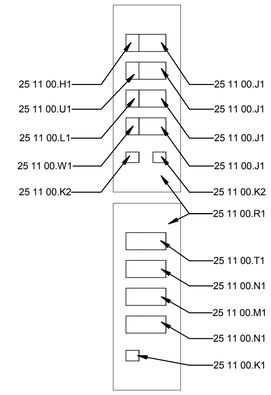


D5 DIN RAIL LAYOUT
3/4" = 1'-0"
0 1' 2' 3'

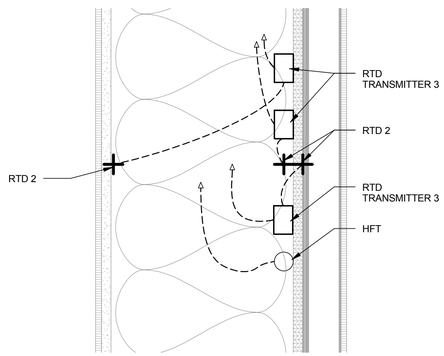


C1 BUILDING SENSORS (WALL)
3" = 1'-0"
0 3" 6" 1'

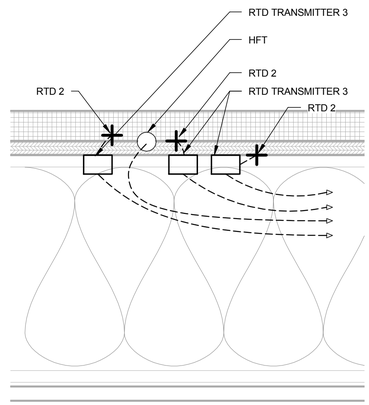


C3 BUILDING SENSORS (ROOF)
3" = 1'-0"
0 3" 6" 1'

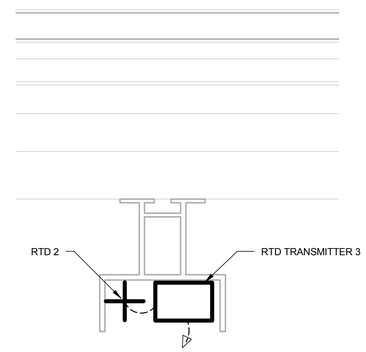


C5 POWER ARM RAIL SECTION
6" = 1'-0"
0 1" 2" 3" 4"

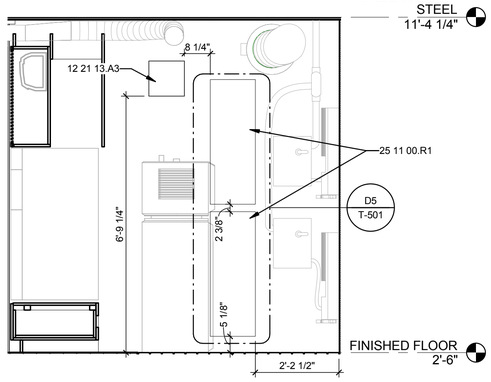


A1 SOUTH INTERIOR ELEVATION
1/2" = 1'-0"
0 3" 6" 1'

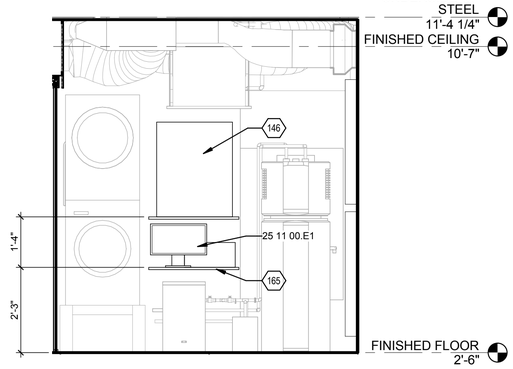


A3 EAST INTERIOR ELEVATION
1/2" = 1'-0"
0 3" 6" 1'

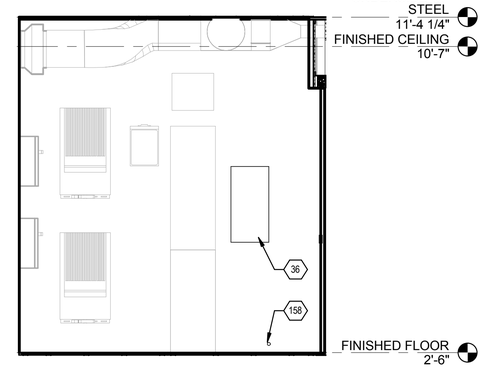


A5 WEST INTERIOR ELEVATION
1/2" = 1'-0"
0 3" 6" 1'

## GENERAL SHEET NOTES

## REFERENCE KEYNOTES

| | |
|---|---|
| 12 21 13.A3 | BLINDS CONTROL BOX |
| 25 11 00.E1 | COMPUTER MONITOR |
| 25 11 00.H1 | PASCAL AUTOMATION CONTROLLER |
| 25 11 00.J1 | 4-CHANNEL GENERAL INPUT |
| 25 11 00.K1 | 12V HIGH-EFFICIENCY POWER SUPPLY |
| 25 11 00.K2 | 24V HIGH-EFFICIENCY POWER SUPPLY |
| 25 11 00.L1 | DMX GATEWAY |
| 25 11 00.M1 | 4 CHANNEL 20A RELAY |
| 25 11 00.N1 | 12 CHANNEL 10A RELAY |
| 25 11 00.R1 | DIN RAIL ENCLOSURE |
| 25 11 00.T1 | PHASE ANGLE DIMMER UNIT |
| 25 11 00.U1 | 4-CHANNEL 0-10V ANALOG DIMMER |
| 25 11 00.W1 | FILLER PLATE |

## SHEET KEYNOTES

| | |
|---|---|
| 36 | 12" X 24" CLEAR SPACE FOR ORANIZERS ENCLOSURE FOR NET PV PRODUCTION METER |
| 146 | COMPETITION ORGANIZER DATALOGGER AND ENCLOSURE |
| 158 | 1" CONDUIT THROUGH EXTERIOR WALL TO ALLOW FOR ORGANIZER'S CABLE. ACCESSIBLE PRIOR TO EXTERIOR FACADE PANEL INSTALLATION. REFERENCE A5/T-501. |
| 165 | ADJUSTABLE SHELVES |

LIVING LIGHT


TEAM NAME: TENNESSEE
ADDRESS: UNIVERSITY OF TENNESSEE
1715 VOLUNTEER BLVD., RM 313
KNOXVILLE, TN 37996
CONTACT: LIVLIGHT@UTK.EDU
HTTP://LIVINGLIGHTUTK.COM


CONSULTANTS
JAMES ROSE ARCHITECT
MALLIA ENGINEERING
ROSS BRYAN ASSOCIATES
RICHARD KELSO
LEON TOLBERT

CLIENT
U.S. DEPARTMENT OF ENERGY
SOLAR DECATHLON 2011
WWW.SOLARDECATHLON.GOV

U.S. DEPARTMENT OF ENERGY SOLAR DECATHLON

| MARK | DATE | DESCRIPTION |
|---|---|---|

| | |
|---|---|
| LOT NUMBER: | 202 |
| DRAWN BY: | CHRIS BOEHME |
| CHECKED BY: | MATTHEW BERWIND |
| COPYRIGHT: | NONE: PROJECT IS PUBLIC DOMAIN |

SHEET TITLE
BUILDING CONTROLS DETAILS

T-501

8/13/2011 10:55:34 AM

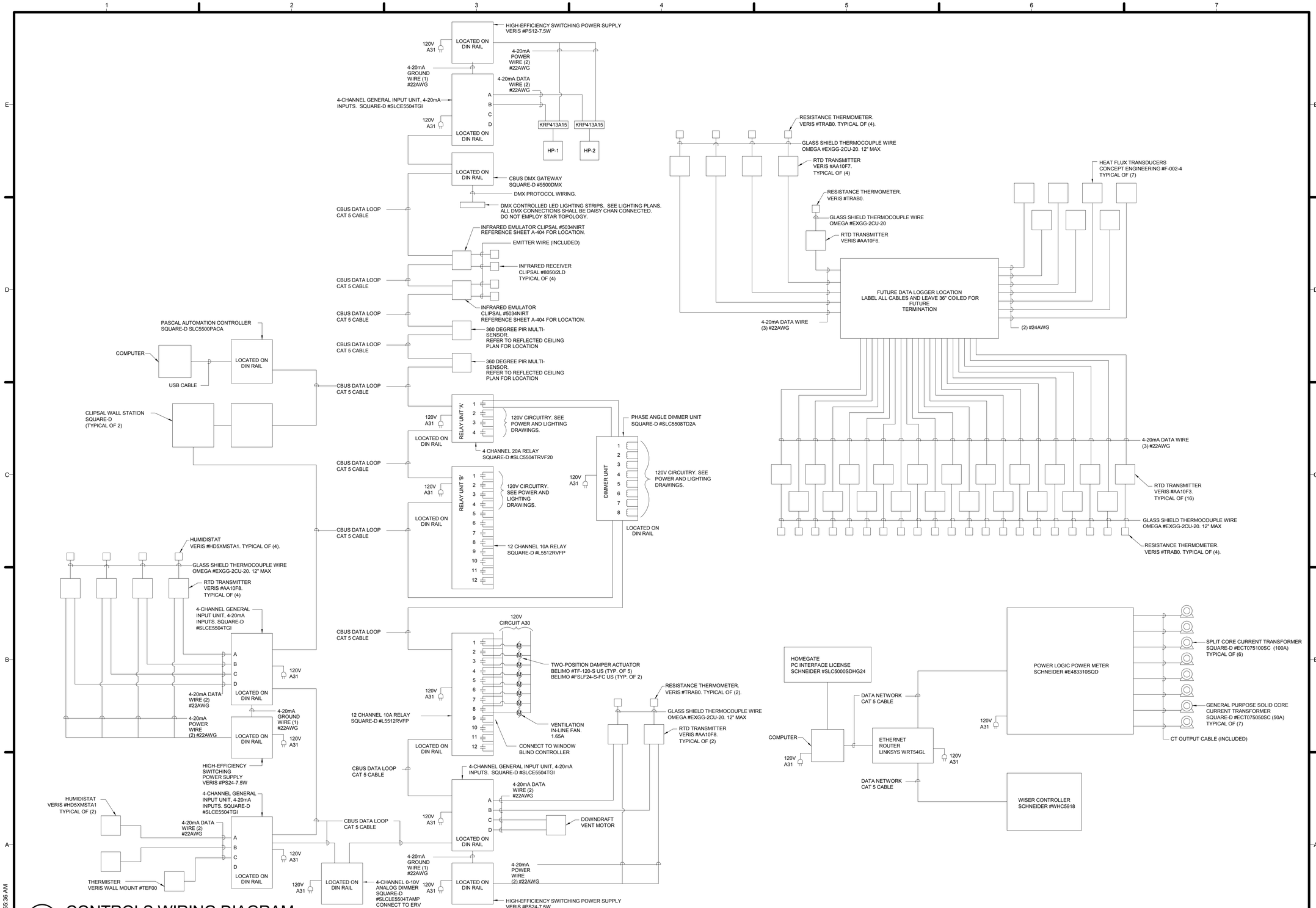


A1 CONTROLS WIRING DIAGRAM

8/13/2011 10:55:36 AM

LIVING LIGHT

| | |
|---|---|
| TEAM NAME: | TENNESSEE |
| ADDRESS: | UNIVERSITY OF TENNESSEE<br>1715 VOLUNTEER BLVD., RM 313<br>KNOXVILLE, TN 37996 |
| CONTACT: | LIVLIGHT@UTK.EDU<br>HTTP://LIVINGLIGHTUTK.COM |

CONSULTANTS

JAMES ROSE ARCHITECT

MALLIA ENGINEERING

ROSS BRYAN ASSOCIATES

RICHARD KELSO

LEON TOLBERT

CLIENT

U.S. DEPARTMENT OF ENERGY

SOLAR DECATHLON 2011

WWW.SOLARDECATHLON.GOV

U.S. DEPARTMENT OF ENERGY SOLAR DECATHLON

| MARK | DATE | DESCRIPTION |
|---|---|---|

| | |
|---|---|
| LOT NUMBER: | 202 |
| DRAWN BY: | MEGAN CHAFIN |
| CHECKED BY: | MATTHEW BERWIND |
| COPYRIGHT: | NONE: PROJECT IS PUBLIC DOMAIN |

SHEET TITLE

CONTROLS WIRING DIAGRAM

T-601

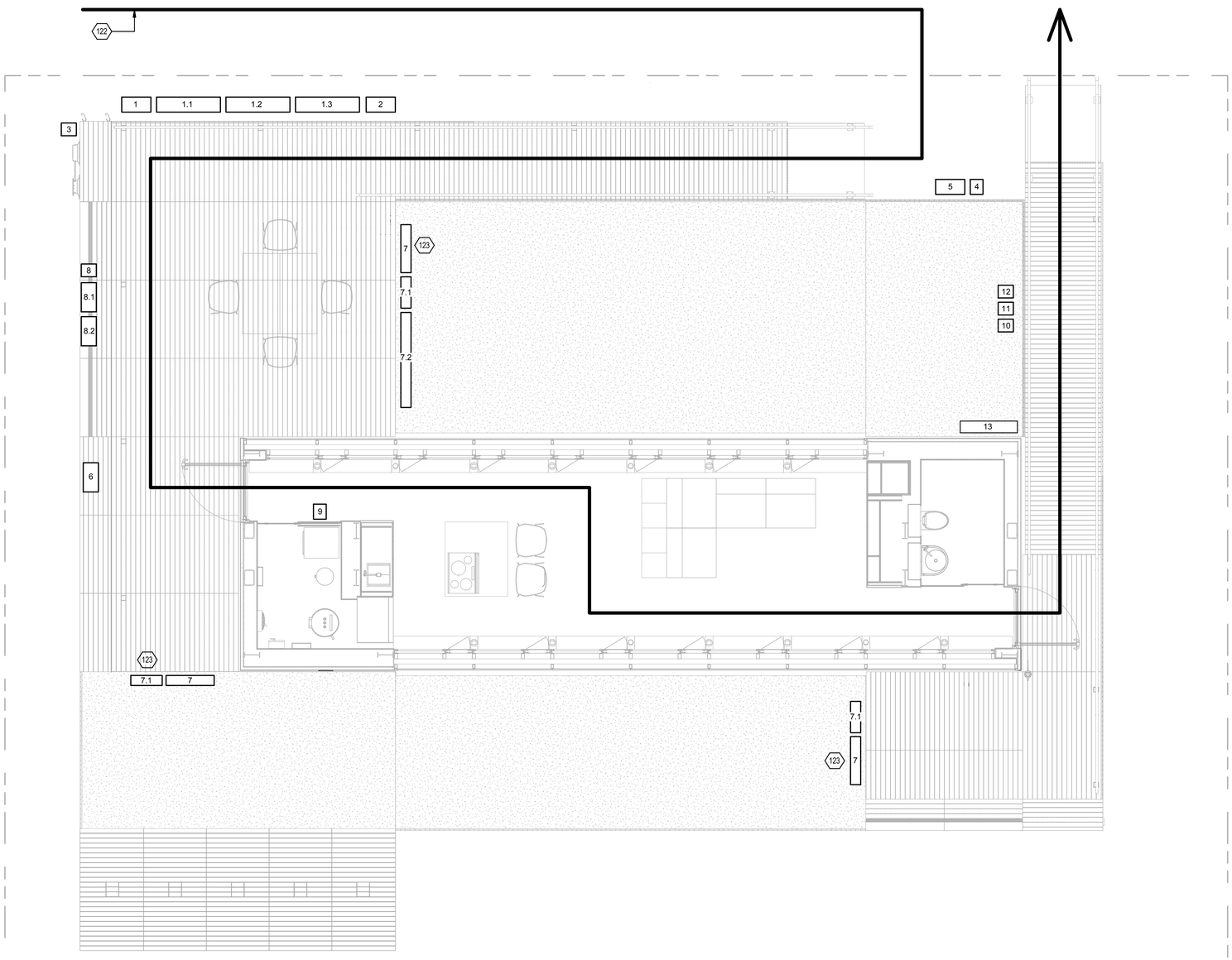


A1 PUBLIC EXHIBIT PLAN

1/4" = 1'-0"

0 2' 4' 8'

## GENERAL SHEET NOTES

## REFERENCE KEYNOTES

## SHEET KEYNOTES

| | |
|---|---|
| 122 | STANDARD PUBLIC EXHIBIT TOUR ROUTE |
| 123 | SIGNAGE PROVIDED FOR EXTENDED TOUR |

PUBLIC EXHIBIT SIGNAGE SCHEDULE

| MARK | SIZE | MATERIAL | DETAIL | SIGN TEXT |
|---|---|---|---|---|
| 1 | 20.73" X 11" | METAL | A5/X-501 | CONCEPT EXPLANATION |
| 1.1 | 40.13" X 11" | METAL | A5/X-501 | CONCEPT 1 AND 2 |
| 1.2 | 40.13" X 11" | METAL | A5/X-501 | CONCEPT 3 AND 4 |
| 1.3 | 40.13" X 11" | METAL | A5/X-501 | CONCEPT 5 AND 6 |
| 2 | 20.73" X 11" | METAL | A5/X-501 | INSPIRATION |
| 3 | 9.25" X 11" | METAL | D5/X-501 | EV CHARGING STATION |
| 4 | 9.25" X 11" | METAL | A3/X-501 | RETROFIT |
| 5 | 20.73" X 11" | METAL | A3/X-501 | SOLAR ARRAY |
| 6 | 20.73" X 11" | METAL | C1/X-501 | TRANSPORTATION |
| 7 | 36.75" X 7.75" | METAL | A1/X-501 | LANDSCAPE 1 |
| 7.1 | 20.75" X 7.75" | METAL | A1/X-501 | LANDSCAPE 2 |
| 7.2 | 72.75" X 7.75" | METAL | A1/X-501 | LANDSCAPE 3 |
| 8 | 9.25" X 11" | METAL | C3/X-501 | SMART FACADE INTRO |
| 8.1 | 20.73" X 11" | METAL | C3/X-501 | SMART FACADE |
| 8.2 | 20.73" X 11" | METAL | C3/X-501 | HEATING AND COOLING |
| 9 | 9.25" X 11" | VINYL | C5/X-501 | MECHANICAL ROOM |
| 10 | 9.25" X 11" | METAL | A1/X-501 | THE TEAM |
| 11 | 9.25" X 11" | METAL | A1/X-501 | MARKETABILITY |
| 12 | 9.25" X 11" | METAL | A1/X-501 | QR CODES |
| 13 | 43.75" X 9" | VINYL | A1/X-201 | HOUSE SIGN |

LIVING LIGHT


TEAM NAME: TENNESSEE

ADDRESS: UNIVERSITY OF TENNESSEE
1715 VOLUNTEER BLVD., RM 313
KNOXVILLE, TN 37996

CONTACT: LIVLIGHT@UTK.EDU
HTTP://LIVINGLIGHTUTK.COM


CONSULTANTS

JAMES ROSE ARCHITECT
MALLIA ENGINEERING
ROSS BRYAN ASSOCIATES
RICHARD KELSO
LEON TOLBERT

CLIENT

U.S. DEPARTMENT OF ENERGY
SOLAR DECATHLON 2011
WWW.SOLARDECATHLON.GOV

U.S. DEPARTMENT OF ENERGY SOLAR DECATHLON

| MARK | DATE | DESCRIPTION |
|---|---|---|

LOT NUMBER: 202
DRAWN BY: MEGAN CHAFIN
CHECKED BY: JAMES ROSE
COPYRIGHT: NONE: PROJECT IS PUBLIC DOMAIN

SHEET TITLE

PUBLIC EXHIBIT PLAN

X-101

8/13/2011 10:55:47 AM

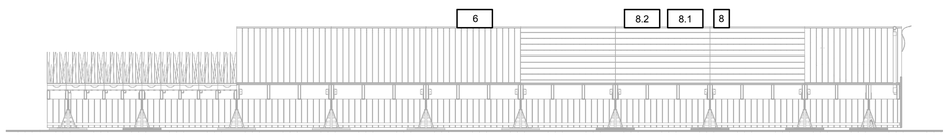


C1 PUBLIC EXHIBIT WEST ELEVATION
1/4" = 1'-0"

0 2' 4' 8'

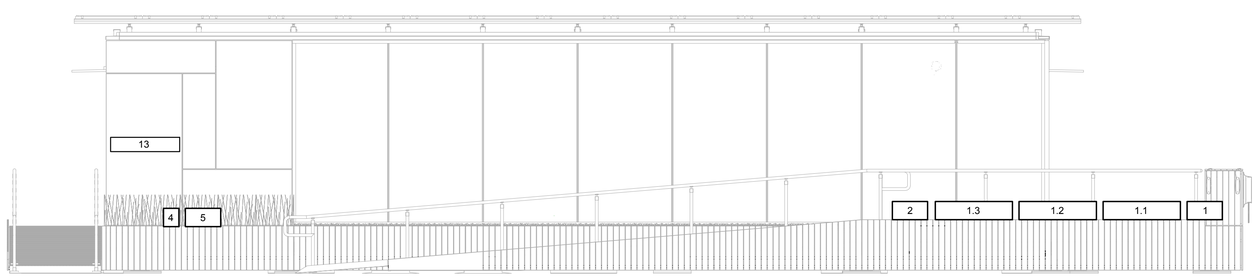


A1 PUBLIC EXHIBIT NORTH ELEVATION
1/4" = 1'-0"

0 2' 4' 8'

## GENERAL SHEET NOTES

## REFERENCE KEYNOTES

## SHEET KEYNOTES

LIVING LIGHT

| | |
|---|---|
| TEAM NAME: | TENNESSEE |
| ADDRESS: | UNIVERSITY OF TENNESSEE<br>1715 VOLUNTEER BLVD., RM 313<br>KNOXVILLE, TN 37996 |
| CONTACT: | LIVLIGHT@UTK.EDU<br>HTTP://LIVINGLIGHTUTK.COM |

CONSULTANTS

JAMES ROSE ARCHITECT
MALLIA ENGINEERING
ROSS BRYAN ASSOCIATES
RICHARD KELSO
LEON TOLBERT

CLIENT

U.S. DEPARTMENT OF ENERGY
SOLAR DECATHLON 2011
WWW.SOLARDECATHLON.GOV

U.S. DEPARTMENT OF ENERGY SOLAR DECATHLON

| MARK | DATE | DESCRIPTION |
|---|---|---|

| | |
|---|---|
| LOT NUMBER: | 202 |
| DRAWN BY: | MEGAN CHAFIN |
| CHECKED BY: | JAMES ROSE |
| COPYRIGHT: | NONE: PROJECT IS PUBLIC DOMAIN |

SHEET TITLE

PUBLIC EXHIBIT ELEVATIONS

X-201

8/13/2011 10:55:59 AM

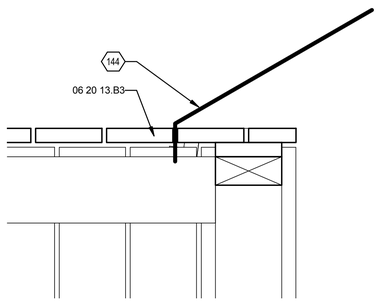


C1 SIGNAGE DETAIL AT CASEWORK
3" = 1'-0"

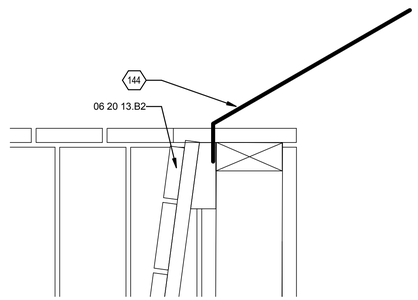


C3 SIGNAGE DETAIL AT BENCHES
3" = 1'-0"

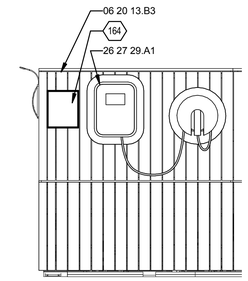


D5 SIGNAGE DETAIL AT EV CHARGER
1/2" = 1'-0"

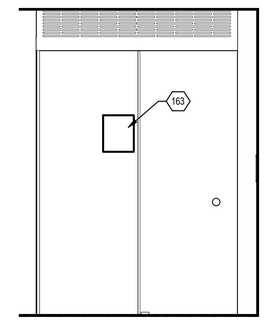


C5 SIGNAGE DETAIL AT MECH. ROOM
1/2" = 1'-0"

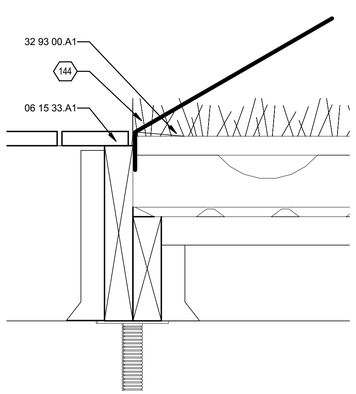


A1 SIGNAGE DETAIL AT PLANTERS
3" = 1'-0"

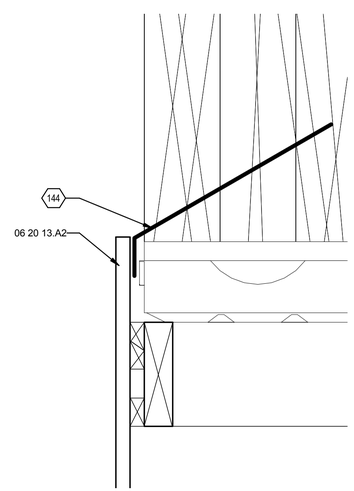


A3 SIGNAGE DETAIL AT PLANTER SKIRT BOARD
3" = 1'-0"

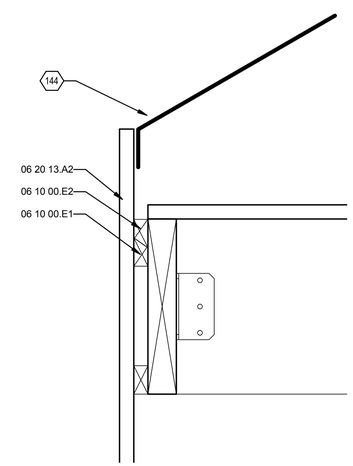


A5 SIGNAGE DETAIL AT NORTH FACE
3" = 1'-0"

## GENERAL SHEET NOTES

## REFERENCE KEYNOTES

| | |
|---|---|
| 06 10 00.E1 | 1 X 2 WOOD CLEAT ATTACHED TO 2 X FRAMING |
| 06 10 00.E2 | 1 X 2 WOOD CLEAT ATTACHED TO SKIRT BOARD |
| 06 15 33.A1 | 1 X 4 WOOD DECKING |
| 06 20 13.A2 | 1 X 4 CYPRESS SKIRT BOARD |
| 06 20 13.B2 | HIGH BACK BENCH |
| 06 20 13.B3 | STORAGE CABINET |
| 26 27 29.A1 | ELECTRICAL VEHICLE CHARGING STATION |
| 32 93 00.A1 | PLANTER TRAY WITH LOW PLANTS |

## SHEET KEYNOTES

| | |
|---|---|
| 144 | METAL PUBLIC EXHIBIT SIGN, REFERENCE SCHEDULE ON SHEET X-101 FOR SIZES. |
| 163 | VINYL PUBLIC EXHIBIT SIGN, MOUNTED ON MECHANICAL ROOM DOOR. REFERENCE SCHEDULE ON SHEET X-101 FOR SIZE. |
| 164 | METAL PUBLIC EXHIBIT SIGN, MOUNTED TO BACK OF CABINETRY. REFERENCE SCHEDULE ON SHEET X-101 FOR SIZE. |

LIVING LIGHT


TEAM NAME: TENNESSEE

ADDRESS: UNIVERSITY OF TENNESSEE
1715 VOLUNTEER BLVD., RM 313
KNOXVILLE, TN 37996

CONTACT: LIVLIGHT@UTK.EDU
HTTP://LIVINGLIGHTUTK.COM

CONSULTANTS

JAMES ROSE ARCHITECT

MALLIA ENGINEERING

ROSS BRYAN ASSOCIATES

RICHARD KELSO

LEON TOLBERT


CLIENT

U.S. DEPARTMENT OF ENERGY

SOLAR DECATHLON 2011

WWW.SOLARDECATHLON.GOV

U.S. DEPARTMENT OF ENERGY SOLAR DECATHLON

| MARK | DATE | DESCRIPTION |
|---|---|---|

| | |
|---|---|
| LOT NUMBER: | 202 |
| DRAWN BY: | MEGAN CHAFIN |
| CHECKED BY: | JAMES ROSE |
| COPYRIGHT: | NONE: PROJECT IS PUBLIC DOMAIN |

SHEET TITLE

PUBLIC EXHIBIT DETAILS

X-501

8/13/2011 10:56:05 AM

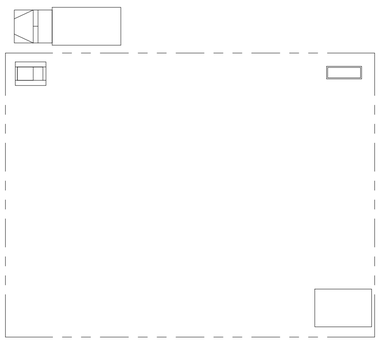

## D1 STEP 1: TOOL ARRIVAL

1/16" = 1'-0"  0 8' 16' 32'

-TOOL TRUCK ARRIVES
-SCISSOR LIFT ARRIVES
-BOBCAT ARRIVES
-SURVEY SITE FOR FOOTING LOCATIONS
-UNLOAD CRIBBING
-LAYOUT PADDING FOR TRUCKS TO DRIVE

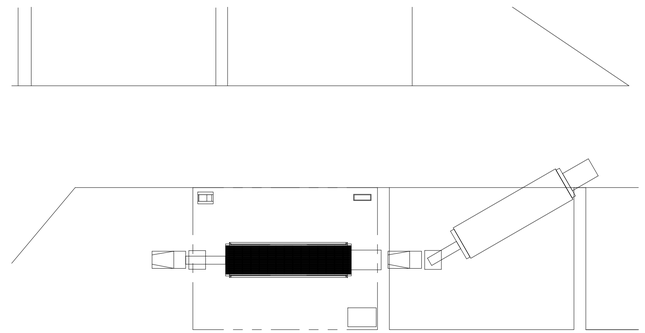

## D3 STEP 2: HOUSE ARRIVAL

1/32" = 1'-0"  0 16' 32' 64'

-TRUCK ARRIVES WITH HOUSE AND MOVES INTO PLACE
-TRUCK AIRBAG SYSTEM PLUS HYDRAULIC JACKS RAISE AND LEVEL HOUSE TO DESIRED FINISH FLOOR HEIGHT BASED ON LOW POINT ON SITE

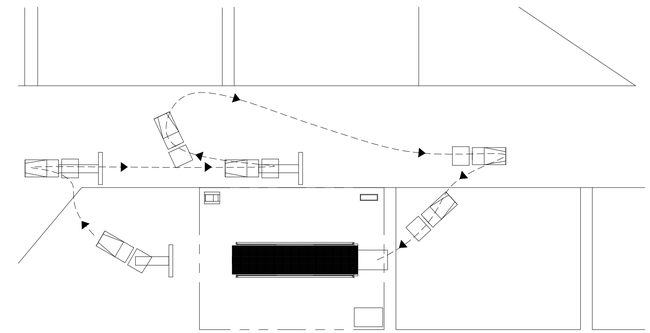

## D5 STEP 3: FOUNDATION SYSTEM

1/32" = 1'-0"  0 16' 32' 64'

-PLACE SAND, GEOTEXTILE, CRIBBING UNDER HOUSE JACKS
-ADJUST JACKS TO HEIGHT OF LEVELED HOUSE
-TRUCK CAB WITH GOOSENECK DETACHES FROM HOUSE. TRUCK DETACHES FROM GOOSENECK IN FRONT OF HOUSE AND TURNS AROUND TO PICK UP BOGEY AT OPPOSITE END OF THE HOUSE
-TRUCK BACKS UP TO CONNECT TO BOGEY

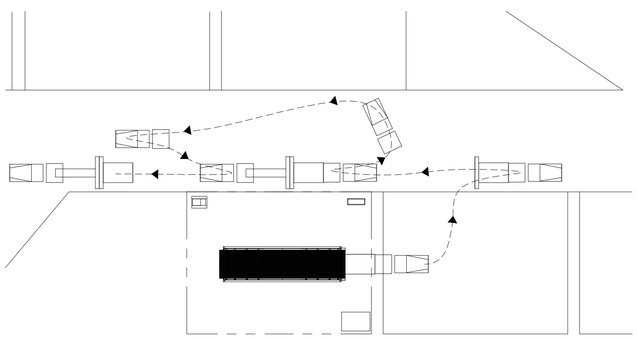

## B1 STEP 4: TRUCK DEPARTURE

1/32" = 1'-0"  0 16' 32' 64'

-TRUCK CAB WITH BOGEY DETACHES FROM HOUSE. TRUCK CONNECTS BOGEY TO GOOSENECK IN FRONT OF THE HOUSE
-TRUCK DETACHES FROM BOGEY AND TURNS AROUND REATTACH TO GOOSENECK
-TRUCK DEPARTS SITE WITH GOOSENECK AND BOGEY
-REMOVE HOUSE COVER
-REMOVE TEMPORARY CROSS BRACING
-UNLOAD PV MODULES FROM INSIDE THE HOUSE

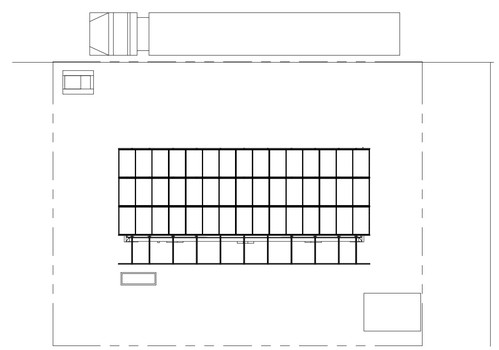

## B4 STEP 5: INSTALL PHOTOVOLTAICS

1/16" = 1'-0"  0 8' 16' 32'

-SECOND TRUCK ARRIVES
-DECK MODULES, AND JACKS ARE REMOVED FROM TRUCK BED
-PHOTOVOLTAICS ARE ATTACHED TO THE OUTER PERIMETER OF THE SOLAR ARRAY
-SCISSOR LIFT DEPARTS
-GROUNDRODS ARE INSTALLED AND HAMMERED INTO THE GROUND

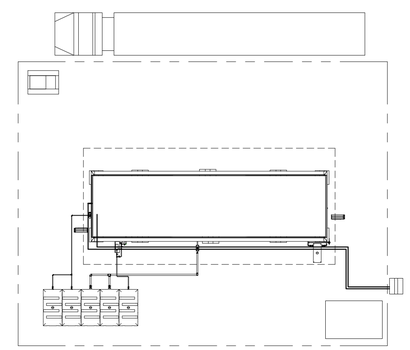

## B6 STEP 6: UTILITY CONNECTIONS

1/16" = 1'-0"  0 8' 16' 32'

-LAYOUT AND CONNECT EXTERIOR HVAC UNITS
-LAYOUT WATER STORAGE TANKS
-CONNECT TO DISTRIBUTION PANEL AND RUN ELECTRICAL WIRES FOR FINAL GRID CONNECTION.
-ORGANIZERS RUN THEIR CONTROLS WIRES TO HOUSE
-SET UP SAND, PLYWOOD, AND JACKS FOR MODULAR DECKING

LIVING LIGHT

| | |
|---|---|
| TEAM NAME: | TENNESSEE |
| ADDRESS: | UNIVERSITY OF TENNESSEE<br>1715 VOLUNTEER BLVD., RM 313<br>KNOXVILLE, TN 37996 |
| CONTACT: | LIVLIGHT@UTK.EDU<br>HTTP://LIVINGLIGHTUTK.COM |

CONSULTANTS

JAMES ROSE ARCHITECT
MALLIA ENGINEERING
ROSS BRYAN ASSOCIATES
RICHARD KELSO
LEON TOLBERT

CLIENT

U.S. DEPARTMENT OF ENERGY
SOLAR DECATHLON 2011
WWW.SOLARDECATHLON.GOV

U.S. DEPARTMENT OF ENERGY SOLAR DECATHLON

| MARK | DATE | DESCRIPTION |
|---|---|---|

| | |
|---|---|
| LOT NUMBER: | 202 |
| DRAWN BY: | MEGAN GLENN |
| CHECKED BY: | JAMES ROSE |
| COPYRIGHT: | NONE: PROJECT IS PUBLIC DOMAIN |

SHEET TITLE

ARRIVAL SEQUENCE PHASE 1

O-101

8/13/2011 10:52:07 AM

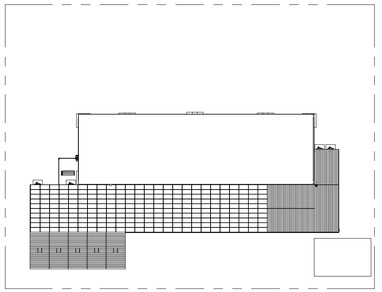

## D1 STEP 7: INSTALL DECKING

1/16" = 1'-0"

0 8' 16' 32'

-PLACE AND CONNECT MODULAR DECKING
-BEGIN TO PLACE PLANTING

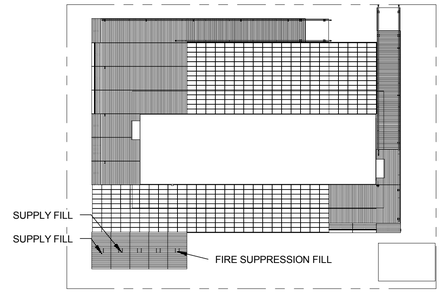


NOTE: REFERENCE SHEET O-105 FOR WATER DELIVERY DETAILS

## D3 STEP 8: FINISH DECKING

1/16" = 1'-0"

0 8' 16' 32'

-ADD STAIRS AND RAMP TO DECKING
-INSTALL RAILINGS
-INSTALL DECK LIGHTING
-iNSTALL AWNINGS
-FILL SUPPLY AND FIRE SUPPRESSION TANKS

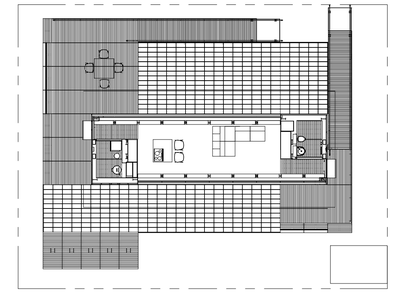

## D5 STEP 9: INTERIOR SET UP

1/16" = 1'-0"

0 8' 16' 32'

-FURNITURE PLACED
-KITCHENWARE AND ELECTRONICS PLACED
-FINAL GRID CONNECTION
-TESTING

## A1 STEP 10: TOOL DEPARTURE

1/16" = 1'-0"

0 8' 16' 32'

-TOOLS DEPART

LIVING LIGHT

| | |
|---|---|
| TEAM NAME: | TENNESSEE |
| ADDRESS: | UNIVERSITY OF TENNESSEE<br>1715 VOLUNTEER BLVD., RM 313<br>KNOXVILLE, TN 37996 |
| CONTACT: | LIVLIGHT@UTK.EDU<br>HTTP://LIVINGLIGHTUTK.COM |

CONSULTANTS

JAMES ROSE ARCHITECT
MALLIA ENGINEERING
ROSS BRYAN ASSOCIATES
RICHARD KELSO
LEON TOLBERT

CLIENT

U.S. DEPARTMENT OF ENERGY
SOLAR DECATHLON 2011
WWW.SOLARDECATHLON.GOV

U.S. DEPARTMENT OF ENERGY SOLAR DECATHLON

| MARK | DATE | DESCRIPTION |
|---|---|---|

| | |
|---|---|
| LOT NUMBER: | 202 |
| DRAWN BY: | MEGAN GLENN |
| CHECKED BY: | JAMES ROSE |
| COPYRIGHT: | NONE: PROJECT IS PUBLIC DOMAIN |

SHEET TITLE

ARRIVAL SEQUENCE PHASE 2

O-102

8/13/2011 10:52:45 AM

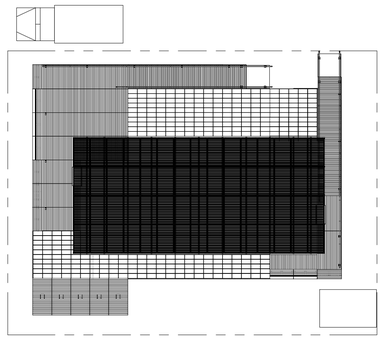

## D1 STEP 1: TOOL ARRIVAL

1/16" = 1'-0"  0 8' 16' 32'

-TOOL TRUCK ARRIVES FOR DISASSEMBLY
-BOBCAT ARRIVES ON SITE

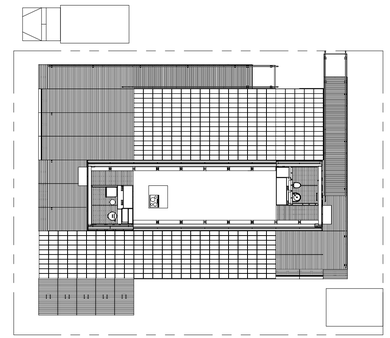

## D3 STEP 2: INTERIOR DISASSEMBLY

1/16" = 1'-0"  0 8' 16' 32'

-FURNITURE PACKED IN THE HOUSE
-KITCHENWARE AND ELECTRONICS PACKED
-DISCONNECT FROM MAIN GRID

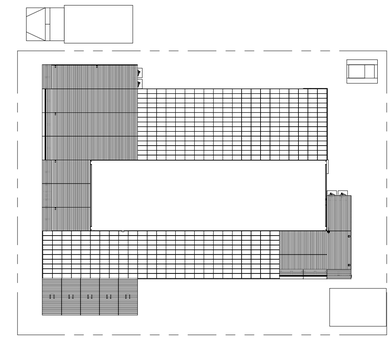

## D5 STEP 3: BEGIN TAKING APART DECKING

1/16" = 1'-0"  0 8' 16' 32'

-REMOVE AWNINGS
-DETACH STAIRS AND RAMP FROM DECKING
-TAKE OUT RAILINGS
-UNINSTALL DECK LIGHTING

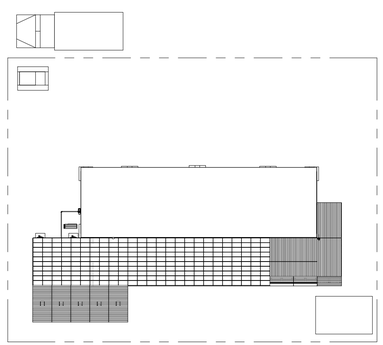

## B1 STEP 4: CONTINUE UNINSTALL DECKING

1/16" = 1'-0"  0 8' 16' 32'

-DETACH MODULAR DECKING
-REMOVE PLANTING

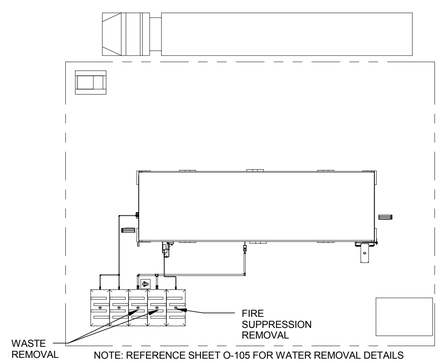


## B3 STEP 5: UTILITIES DISCONNECT

1/16" = 1'-0"  0 8' 16' 32'

-DISCONNECT EXTERIOR HVAC UNIT
-WATER REMOVAL FOR FIRE SUPPRESSION, AND WASTE WATER
-DETACH CISTERNS FOR RAINWATER CAPTURE, INTERIOR WASTE WATER, AND DISTRIBUTED WATER FROM MALL SITE
-PICK UP SAND, PLYWOOD, AND JACKS FOR MODULAR DECKING

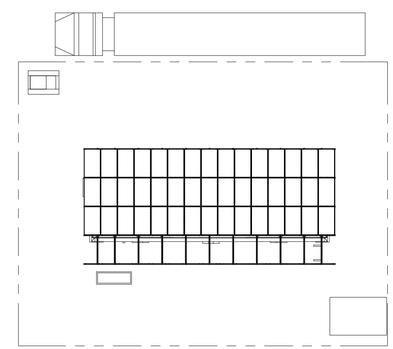

## B5 STEP 6: REMOVE PHOTOVOLTAICS

1/16" = 1'-0"  0 8' 16' 32'

-USE SCISSOR LIFT TO UNINSTALL POWER ARMS AND PHOTOVOLTAIC PANELS
-LOAD SOLAR PANELS IN THE HOUSE
-COVER HOUSE
-REMOVE TEMPORARY CROSS BRACING
-SCISSOR LIFT DEPARTS SITE

LIVING LIGHT

| | |
|---|---|
| TEAM NAME: | TENNESSEE |
| ADDRESS: | UNIVERSITY OF TENNESSEE<br>1715 VOLUNTEER BLVD., RM 313<br>KNOXVILLE, TN 37996 |
| CONTACT: | LIVLIGHT@UTK.EDU<br>HTTP://LIVINGLIGHTUTK.COM |

CONSULTANTS

JAMES ROSE ARCHITECT
MALLIA ENGINEERING
ROSS BRYAN ASSOCIATES
RICHARD KELSO
LEON TOLBERT

CLIENT

U.S. DEPARTMENT OF ENERGY
SOLAR DECATHLON 2011
WWW.SOLARDECATHLON.GOV

U.S. DEPARTMENT OF ENERGY SOLAR DECATHLON

| MARK | DATE | DESCRIPTION |
|---|---|---|

| | |
|---|---|
| LOT NUMBER: | 202 |
| DRAWN BY: | MEGAN GLENN |
| CHECKED BY: | JAMES ROSE |
| COPYRIGHT: | NONE: PROJECT IS PUBLIC DOMAIN |

SHEET TITLE

DISASSEMBLY SEQUENCE PHASE 1

O-103

8/13/2011 10:53:17 AM

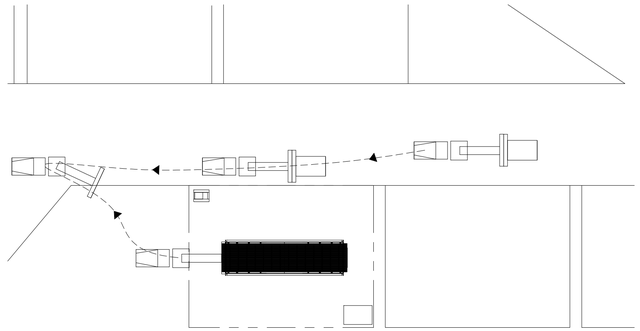

## 1 STEP 7: FOUNDATION SYSTEM

1/32" = 1'-0"

0 16' 32' 64'

-TRUCK ARRIVES TO SITE AND DISCONNECTS FROM BOGEY IN FRONT OF THE HOUSE
-TRUCK BACKS ONTO WEST SIDE OF THE STRUCTURE TO ATTACH THE GOOSENECK TO THE HOUSE

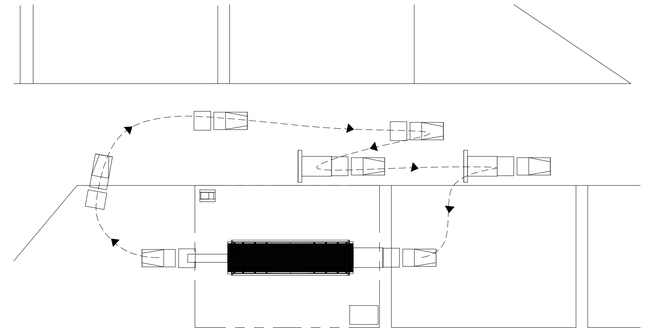

## 3 STEP 8: TRUCK CONNECTION

1/32" = 1'-0"

0 16' 32' 64'

-TRUCK TURNS AROUND TO CONNECT TO BOGEY
-TRUCK BACKS ONTO EAST SIDE OF THE HOUSE TO ATTACH BOGEY
-SCREW JACKS ADJUSTED TO TRANSPORTATION HEIGHT
-PICK UP SAND, GEOTEXTILE, AND CRIBBING FOR FOUNDATION ON LAWN

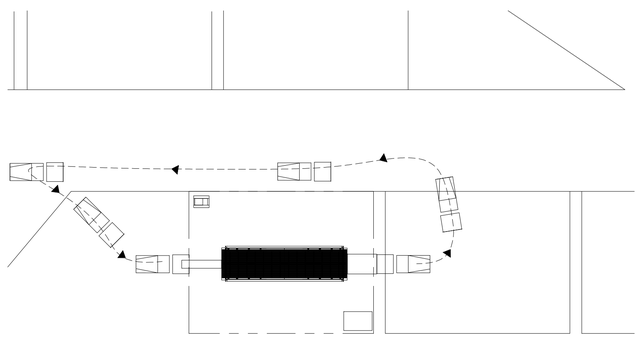

## 2 STEP 9: TRUCK DEPARTURE

1/32" = 1'-0"

0 16' 32' 64'

-TRUCK RECONNECTS TO GOOSENECK AND DEPARTS WITH HOUSE

## D5 STEP 10: TOOL DEPARTURE

1/16" = 1'-0"

0 8' 16' 32'

-TOOL TRAILER IS REMOVED FROM SITE
-BOBCAT LEAVES SITE
-REMOVE PADDING FOR TRUCKS TO DRIVE ON LAWN
-SITE COMPLETELY CLEANED
-CREW DEPARTS

LIVING LIGHT

| | |
|---|---|
| TEAM NAME: | TENNESSEE |
| ADDRESS: | UNIVERSITY OF TENNESSEE<br>1715 VOLUNTEER BLVD., RM 313<br>KNOXVILLE, TN 37996 |
| CONTACT: | LIVLIGHT@UTK.EDU<br>HTTP://LIVINGLIGHTUTK.COM |

CONSULTANTS

JAMES ROSE ARCHITECT
MALLIA ENGINEERING
ROSS BRYAN ASSOCIATES
RICHARD KELSO
LEON TOLBERT

CLIENT

U.S. DEPARTMENT OF ENERGY
SOLAR DECATHLON 2011
WWW.SOLARDECATHLON.GOV

U.S. DEPARTMENT OF ENERGY SOLAR DECATHLON

| MARK | DATE | DESCRIPTION |
|---|---|---|

| | |
|---|---|
| LOT NUMBER: | 202 |
| DRAWN BY: | MEGAN GLENN |
| CHECKED BY: | JAMES ROSE |
| COPYRIGHT: | NONE: PROJECT IS PUBLIC DOMAIN |

SHEET TITLE

DISASSEMBLY SEQUENCE PHASE 2

O-104

8/13/2011 10:53:38 AM

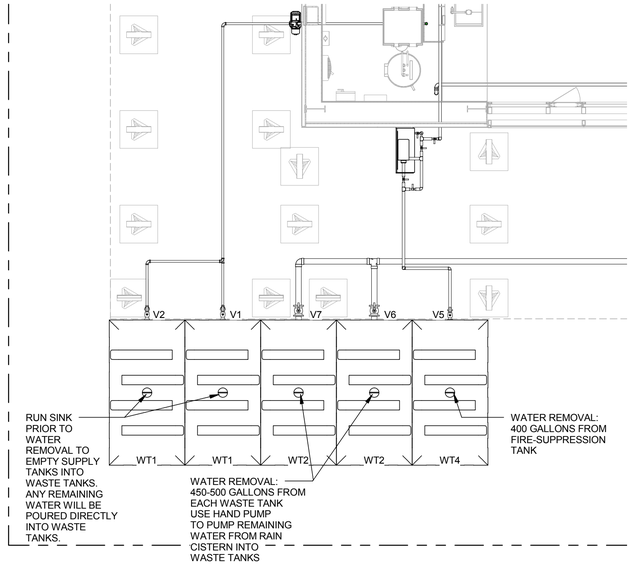


## C1 WATER REMOVAL PLAN

1/4" = 1'-0"

0 2' 4' 8'

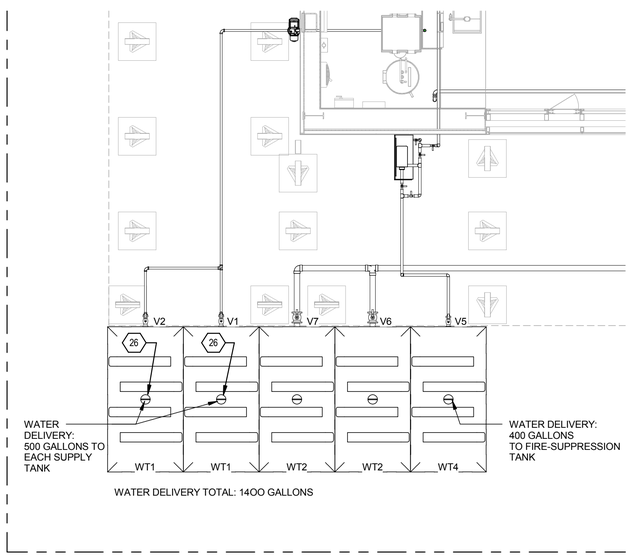


## A1 WATER DELIVERY PLAN

1/4" = 1'-0"

0 2' 4' 8'

| WATER TANK LEGEND | |
|---|---|
| WT1 | SUPPLY TANK |
| WT2 | WASTE TANK |
| WT3 | RAIN CATCHMENT TANK |
| WT4 | FIRE TANK |

## GENERAL SHEET NOTES

## REFERENCE KEYNOTES

## SHEET KEYNOTES

26 8" FILL POINT

LIVING LIGHT

TEAM NAME: TENNESSEE

ADDRESS: UNIVERSITY OF TENNESSEE
1715 VOLUNTEER BLVD., RM 313
KNOXVILLE, TN 37996

CONTACT: LIVLIGHT@UTK.EDU
HTTP://LIVINGLIGHTUTK.COM

CONSULTANTS

JAMES ROSE ARCHITECT

MALLIA ENGINEERING

ROSS BRYAN ASSOCIATES

RICHARD KELSO

LEON TOLBERT

CLIENT

U.S. DEPARTMENT OF ENERGY

SOLAR DECATHLON 2011

WWW.SOLARDECATHLON.GOV

U.S. DEPARTMENT OF ENERGY SOLAR DECATHLON

| MARK | DATE | DESCRIPTION |
|---|---|---|

| | |
|---|---|
| LOT NUMBER: | 202 |
| DRAWN BY: | MEGAN CHAFIN |
| CHECKED BY: | JAMES ROSE |
| COPYRIGHT: | NONE: PROJECT IS PUBLIC DOMAIN |

SHEET TITLE

WATER DELIVERY AND REMOVAL

O-105

8/13/2011 10:53:46 AM