halepilihonua

by teamhawai'i

/ hale - a built structure /
/ pili - connection; to connect /
/ honua - earth and land /

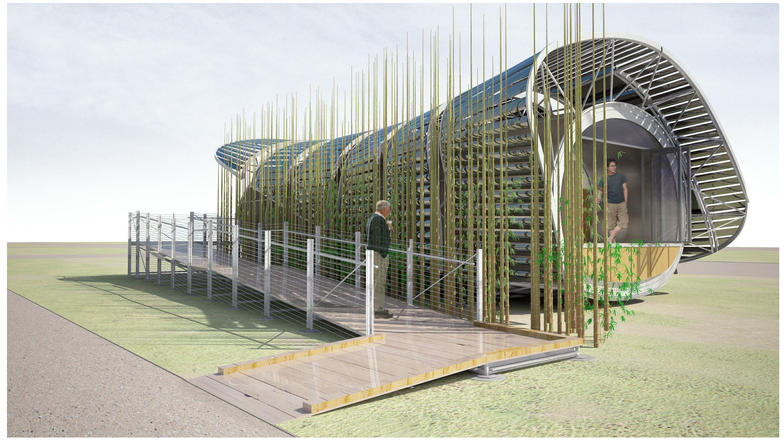

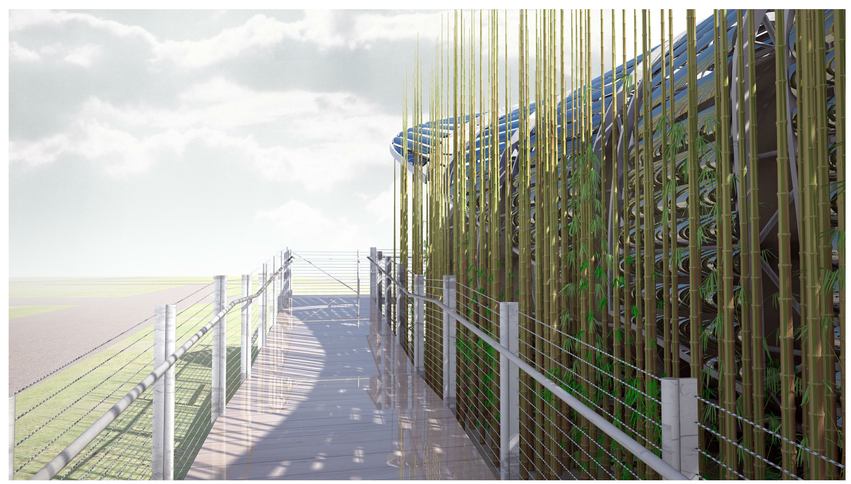

TEAM NAME: UNIVERSITY OF HAWAII (TEAM HAWAII)

ADDRESS: UNIVERSITY OF HAWAI'I AT MĀNOA
2410 CAMPUS ROAD
HONOLULU, HI 96822

CONTACT: ROCKWOOD@ARCH.HAWAII.EDU
WWW.SOLAR.HAWAII.EDU

LOT NUMBER: 306

COPYRIGHT: UNIVERSITY OF HAWAI'I
SCHOOL OF ARCHITECTURE

CLIENT

U.S. DEPARTMENT OF ENERGY / NREL
2011 SOLAR DECATHLON

WWW.SOLARDECATHLON.GOV

U.S. DEPARTMENT OF ENERGY
SOLAR DECATHLON

SHEET LIST	
SHT NO	SHEET NAME
G-000	COVER SHEET
G-001	TABLE OF CONTENTS
G-101	FINISHED SQUARE FOOTAGE COMPLIANCE PLAN
G-102	EGRESS PLAN
G-103	ADA TOUR ROUTE COMPLIANCE PLAN
G-201	SOLAR ENVELOPE COMPLIANCE ELEVATIONS
G-202	SOLAR ENVELOPE COMPLIANCE ELEVATIONS
G-602	EXTERIOR SHADING STUDIES
C-100	SITE LOCATION MAP
C-101	GROUND CONTACT PLAN
C-104	SITE ELEVATIONS
C-105	SITE ELEVATIONS
L-001	LANDSCAPE NOTES AND SYMBOLS
L-101	LANDSCAPE SITE PLAN
L-102	LANDSCAPE IRRIGATION PLAN
L-201	LANDSCAPE ELEVATIONS
L-601	LANDSCAPING DETAILS
L-602	LANDSCAPING PLUMBING DIAGRAM
S-001	STRUCTURAL NOTES AND SYMBOLS
S-100	FOUNDATION PLAN
S-101	FOUNDATION ELEVATION
S-102	FIRST FLOOR FRAMING PLAN
S-103	ROOF FRAMING PLAN
S-104	DECK FRAMING PLAN
S-105	RAMP DECK ELEVATIONS
S-201	FRAMING ELEVATIONS
S-301	FRAMING SECTIONS
S-500	ENLARGE STRUCTURAL PLAN
S-501	ENLARGE STRUCTURAL SECTION
S-511	SECTION DETAILS
S-521	RAMP AND DECK DETAILS
S-522	RAMP AND DECK DETAILS
S-523	RAMP AND DECK DETAILS
S-524	RAMP AND DECK DETAILS
S-525	RAMP AND DECK DETAILS
S-526	RAMP AND DECK DETAILS
S-527	RAMP AND DECK DETAILS
S-535	FOUNDATION DETAILS
S-536	FOUNDATION DETAILS
S-537	FOUNDATION DETAILS
S-538	FOUNDATION DETAILS
S-539	FOUNDATION DETAILS
S-540	FOUNDATION DETAILS
S-541	FOUNDATION DETAILS
S-542	FOUNDATION DETAILS
S-543	FOUNDATION DETAILS
S-544	FOUNDATION DETAILS
S-550	SHELL FRAMING DETAILS
S-645	SUPERSTRUCTURE DETAILS
S-646	SUPERSTRUCTURE DETAILS
S-801	TYPICAL DETAILS
S-901	FRAMING ISOMETRICS
S-903	MODULE DIAGRAM

SHEET LIST	
SHT NO	SHEET NAME
A-101	SITE PLAN
A-110	FIRST FLOOR PLAN
A-111	RAMP DECK PLAN
A-112	ROOF PLAN
A-121	FIRST FLOOR REFLECTED CEILING PLAN
A-211	ELEVATIONS
A-212	ELEVATIONS
A-213	INTERIOR ELEVATIONS
A-301	BUILDING SECTIONS
A-302	BUILDING SECTIONS
A-313	WALL SECTIONS AT WEST AND EAST END
A-314	WALL PLAN AT WEST AND EAST END
A-320	FLOOR SECTIONS AND DETAILS
A-321	FLOOR SECTIONS AND DETAILS
A-322	ROOF SECTIONS
A-401	LARGE SCALE PLANS
A-501	PLAN DETAILS
A-511	SECTION DETAILS
A-531	WINDOW AND DOOR DETAILS
A-541	WINDOW AND DOOR DETAILS
A-561	ROOF DETAILS
A-701	TYPICAL DETAILS
F-001	FIRE PROTECTION NOTES AND SYMBOLS
F-101	FIRE DETECTION AND ALARM PLAN
F-102	FIRE SUPPRESSION PLAN
F-601	FIRE PROTECTION SCHEDULES
F-602	FIRE PROTECTION DIAGRAMS
F-603	FIRE SPRINKLER DETAIL
F-901	FIRE SUPPRESSION ISOMETRICS
P-001	PLUMBING SYMBOLS AND NOTES
P-101	PLUMBING SITE PLAN
P-102	DOMESTIC SUPPLY PLAN
P-103	DOMESTIC SANITARY RETURN PLAN
P-601	PLUMBING SCHEDULES
P-602	PLUMBING DIAGRAMS
P-901	DOMESTIC SUPPLY ISOMETRICS
P-902	SANITARY WASTE AND VENT ISOMETRICS
M-001	MECHANICAL SYMBOLS AND NOTES
M-101	HVAC EQUIPMENT AND DISTRIBUTION PLAN
M-102	SPILL CONTAINMENT PLAN
M-103	CONTAINER LOCATIONS PLAN
M-104	MECHANICAL GROUND CONTACT PLAN
M-201	MECHANICAL ELEVATIONS
M-601	MECHANICAL SCHEDULES
M-602	HVAC DIAGRAMS
M-603	SOLAR WATER DIAGRAMS
M-901	HVAC ISOMETRICS
M-902	SOLAR WATER ISOMETRICS
E-001	ELECTRICAL SYMBOLS AND NOTES
E-101	ELECTRICAL DISTRIBUTION PLAN
E-102	LIGHTING PLAN

SHEET LIST	
SHT NO	SHEET NAME
E-103	LIGHTING DETAILS
E-104	PV ROOF PLAN
E-106	RAMP LIGHTING PLAN
E-201	ELECTRICAL EQUIPMENT ELEVATIONS
E-601	PV ONE-LINE DIAGRAM
E-603	THREE-LINE DIAGRAM
E-604	PANEL SCHEDULES
E-605	ELECTRICAL SCHEDULES
T-001	TELECOMMUNICATIONS SYMBOLS AND NOTES
T-101	TELECOMMUNICATIONS WIRING PLAN
T-602	DATA WIRING DIAGRAM
O-100	ARRIVAL STAGING PLAN
O-101	ARRIVAL SHELL ASSEMBLY SEQUENCE PLANS
O-102	SUPERSTRUCTURE ASSEMBLY SEQUENCE PLAN
O-103	RAMP ASSEMBLY SEQUENCE PLAN
O-201	WATER DELIVERY AND REMOVAL PLAN
O-602	TRUCK LOADING DIAGRAM

teamhawai'i

halepilihonua

TEAM NAME: UNIVERSITY OF HAWAII (TEAM HAWAII)

ADDRESS: UNIVERSITY OF HAWAI'I AT MĀNOA
2410 CAMPUS ROAD
HONOLULU, HI 96822

CONTACT: ROCKWOOD@ARCH.HAWAII.EDU
WWW.SOLAR.HAWAII.EDU

CONSULTANTS

ARCHITECTURE:

ENGINEERS:

LANDSCAPING:

CODE CONSULTANTS:

CLIENT

U.S. DEPARTMENT OF ENERGY

SOLAR DECATHLON 2011

WWW.SOLARDECATHLON.GOV

U.S. DEPARTMENT OF ENERGY SOLAR DECATHLON

MARK	DATE	DESCRIPTION

LOT NUMBER: 306

DRAWN BY: UNIVERSITY OF HAWAI'I

CHECKED BY: CHECKER

COPYRIGHT: UNIVERSITY OF HAWAI'I
SCHOOL OF ARCHITECTURE

SHEET TITLE

TABLE OF CONTENTS

G-001

5/9/2011 2:08:26 PM

GENERAL SHEET NOTES

REFERENCE KEYNOTES

SHEET KEYNOTES

teamhawai'i

halepilihonua

TEAM NAME: UNIVERSITY OF HAWAII (TEAM HAWAII)

ADDRESS: UNIVERSITY OF HAWAI'I AT MĀNOA
2410 CAMPUS ROAD
HONOLULU, HI 96822

CONTACT: ROCKWOOD@ARCH.HAWAII.EDU
WWW.SOLAR.HAWAII.EDU

CONSULTANTS

ARCHITECTURE:

ENGINEERS:

LANDSCAPING:

CODE CONSULTANTS:

CLIENT

U.S. DEPARTMENT OF ENERGY

SOLAR DECATHLON 2011

WWW.SOLARDECATHLON.GOV

U.S. DEPARTMENT OF ENERGY SOLAR DECATHLON

MARK	DATE	DESCRIPTION

LOT NUMBER:	306
DRAWN BY:	UNIVERSITY OF HAWAI'I
CHECKED BY:	CHECKER
COPYRIGHT:	UNIVERSITY OF HAWAI'I SCHOOL OF ARCHITECTURE

SHEET TITLE

GENERAL NOTES AND SYMBOLS

G-002

5/6/2011 2:08:30 PM

GENERAL SHEET NOTES

REFERENCE KEYNOTES

SHEET KEYNOTES

teamhawai'i

halepilihonua

TEAM NAME: UNIVERSITY OF HAWAII (TEAM HAWAII)

ADDRESS: UNIVERSITY OF HAWAI'I AT MĀNOA
2410 CAMPUS ROAD
HONOLULU, HI 96822

CONTACT: ROCKWOOD@ARCH.HAWAII.EDU
WWW.SOLAR.HAWAII.EDU

CONSULTANTS

ARCHITECTURE:

ENGINEERS:

LANDSCAPING:

CODE CONSULTANTS:

CLIENT

U.S. DEPARTMENT OF ENERGY

SOLAR DECATHLON 2011

WWW.SOLARDECATHLON.GOV

U.S. DEPARTMENT OF ENERGY SOLAR DECATHLON

MARK	DATE	DESCRIPTION

LOT NUMBER:	306
DRAWN BY:	UNIVERSITY OF HAWAI'I
CHECKED BY:	CHECKER
COPYRIGHT:	UNIVERSITY OF HAWAI'I SCHOOL OF ARCHITECTURE

SHEET TITLE

ABBREVIATIONS

G-003

5/8/2011 2:08:34 PM

GENERAL SHEET NOTES

REFERENCE KEYNOTES

SHEET KEYNOTES

teamhawai'i

halepilihonua

TEAM NAME: UNIVERSITY OF HAWAII (TEAM HAWAII)

ADDRESS: UNIVERSITY OF HAWAI'I AT MĀNOA
2410 CAMPUS ROAD
HONOLULU, HI 96822

CONTACT: ROCKWOOD@ARCH.HAWAII.EDU
WWW.SOLAR.HAWAII.EDU

CONSULTANTS

ARCHITECTURE:

ENGINEERS:

LANDSCAPING:

CODE CONSULTANTS:

CLIENT

U.S. DEPARTMENT OF ENERGY

SOLAR DECATHLON 2011

WWW.SOLARDECATHLON.GOV

U.S. DEPARTMENT OF ENERGY SOLAR DECATHLON

MARK	DATE	DESCRIPTION

LOT NUMBER:	306
DRAWN BY:	UNIVERSITY OF HAWAI'I
CHECKED BY:	CHECKER
COPYRIGHT:	UNIVERSITY OF HAWAI'I SCHOOL OF ARCHITECTURE

SHEET TITLE

SITE AND BUILDING REGULATORY SUMMARY

G-010

5/6/2011 2:08:38 PM

GENERAL SHEET NOTES

REFERENCE KEYNOTES

SHEET KEYNOTES

teamhawai'i

halepilihonua

TEAM NAME: UNIVERSITY OF HAWAII (TEAM HAWAII)

ADDRESS: UNIVERSITY OF HAWAI'I AT MĀNOA
2410 CAMPUS ROAD
HONOLULU, HI 96822

CONTACT: ROCKWOOD@ARCH.HAWAII.EDU
WWW.SOLAR.HAWAII.EDU

CONSULTANTS

ARCHITECTURE:

ENGINEERS:

LANDSCAPING:

CODE CONSULTANTS:

CLIENT

U.S. DEPARTMENT OF ENERGY

SOLAR DECATHLON 2011

WWW.SOLARDECATHLON.GOV

U.S. DEPARTMENT OF ENERGY SOLAR DECATHLON

MARK	DATE	DESCRIPTION

LOT NUMBER:	306
DRAWN BY:	UNIVERSITY OF HAWAI'I
CHECKED BY:	CHECKER
COPYRIGHT:	UNIVERSITY OF HAWAI'I SCHOOL OF ARCHITECTURE

SHEET TITLE

DESIGN INTENT AND TARGET MARKET DESCRIPTION

G-011

5/8/2011 2:08:42 PM

A1 FINISHED SQUARE FOOTAGE COMPLIANCE PLAN
1/4" = 1'-0"

0 2' 4' 8'

5/8/2011 2:08:51 PM

GENERAL SHEET NOTES

1. GENERAL SHEET NOTES

REFERENCE KEYNOTES

SHEET KEYNOTES

teamhawai'i
halepilihonua

TEAM NAME:	UNIVERSITY OF HAWAII (TEAM HAWAII)
ADDRESS:	UNIVERSITY OF HAWAI'I AT MĀNOA 2410 CAMPUS ROAD HONOLULU, HI 96822
CONTACT:	ROCKWOOD@ARCH.HAWAII.EDU WWW.SOLAR.HAWAII.EDU

CONSULTANTS

ARCHITECTURE:
ENGINEERS:
LANDSCAPING:
CODE CONSULTANTS:

CLIENT
U.S. DEPARTMENT OF ENERGY
SOLAR DECATHLON 2011
WWW.SOLARDECATHLON.GOV

U.S. DEPARTMENT OF ENERGY SOLAR DECATHLON

MARK	DATE	DESCRIPTION

LOT NUMBER:	306
DRAWN BY:	UNIVERSITY OF HAWAI'I
CHECKED BY:	Checker
COPYRIGHT:	UNIVERSITY OF HAWAI'I SCHOOL OF ARCHITECTURE

SHEET TITLE

FINISHED SQUARE FOOTAGE COMPLIANCE PLAN

G-101

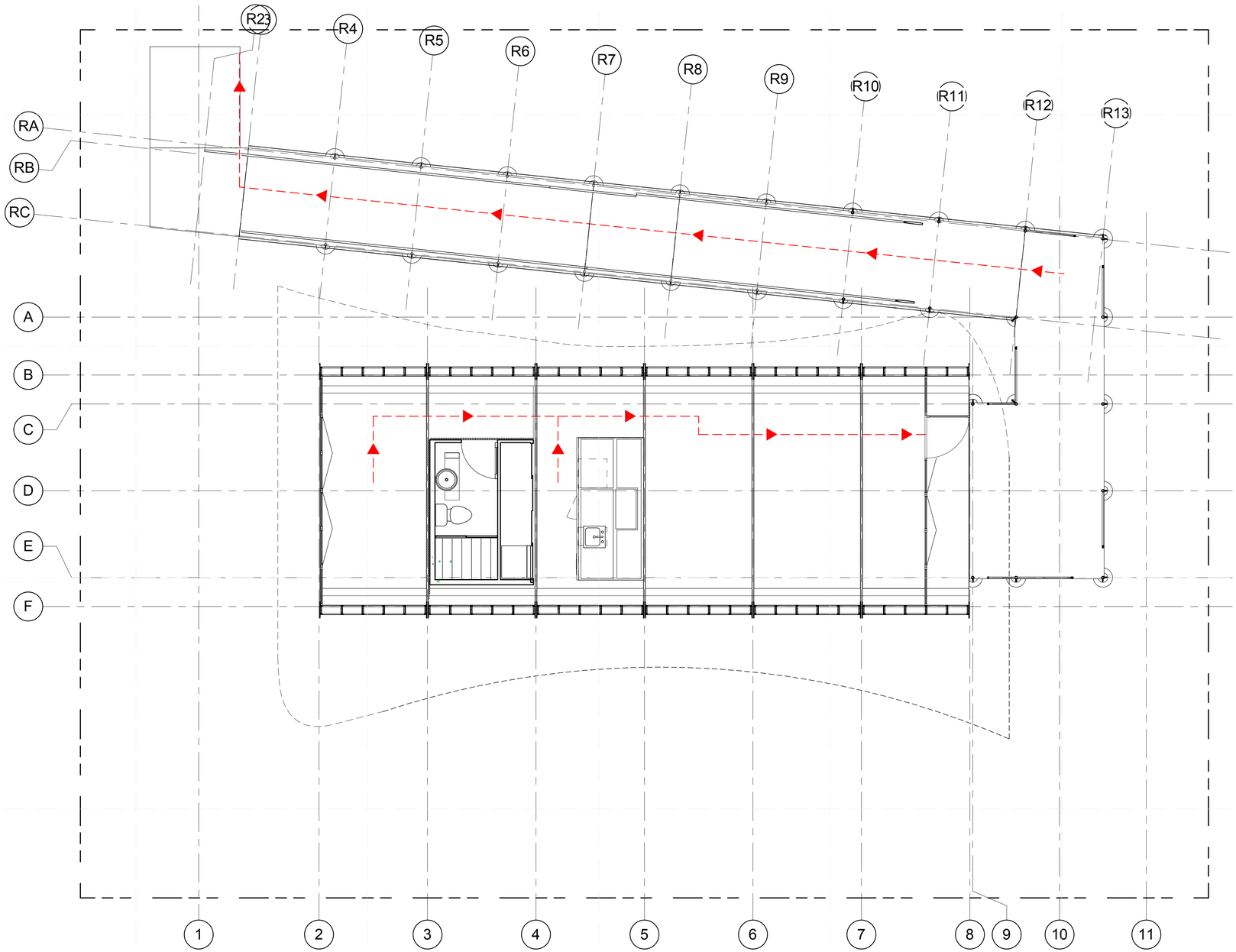

A1 EGRESS PLAN
1/4" = 1'-0"

0 2' 4' 8'

5/8/2011 2:09:00 PM

GENERAL SHEET NOTES

1. GENERAL SHEET NOTES
2. GENERAL SHEET NOTES 2
3. GENERAL SHEET NOTES 3
4. GENERAL SHEET NOTES 4
5. GENERAL SHEET NOTES 5
6. GENERAL SHEET NOTES 6
7. GENERAL SHEET NOTES 7
8. GENERAL SHEET NOTES 8

REFERENCE KEYNOTES

SHEET KEYNOTES

teamhawai'i

halepilihonua

TEAM NAME: UNIVERSITY OF HAWAII (TEAM HAWAII)

ADDRESS: UNIVERSITY OF HAWAI'I AT MĀNOA
2410 CAMPUS ROAD
HONOLULU, HI 96822

CONTACT: ROCKWOOD@ARCH.HAWAII.EDU
WWW.SOLAR.HAWAII.EDU

CONSULTANTS

ARCHITECTURE:

ENGINEERS:

LANDSCAPING:

CODE CONSULTANTS:

CLIENT

U.S. DEPARTMENT OF ENERGY

SOLAR DECATHLON 2011

WWW.SOLARDECATHLON.GOV

U.S. DEPARTMENT OF ENERGY SOLAR DECATHLON

MARK	DATE	DESCRIPTION

LOT NUMBER:	306
DRAWN BY:	UNIVERSITY OF HAWAI'I
CHECKED BY:	Checker
COPYRIGHT:	UNIVERSITY OF HAWAI'I SCHOOL OF ARCHITECTURE

SHEET TITLE

EGRESS PLAN

G-102

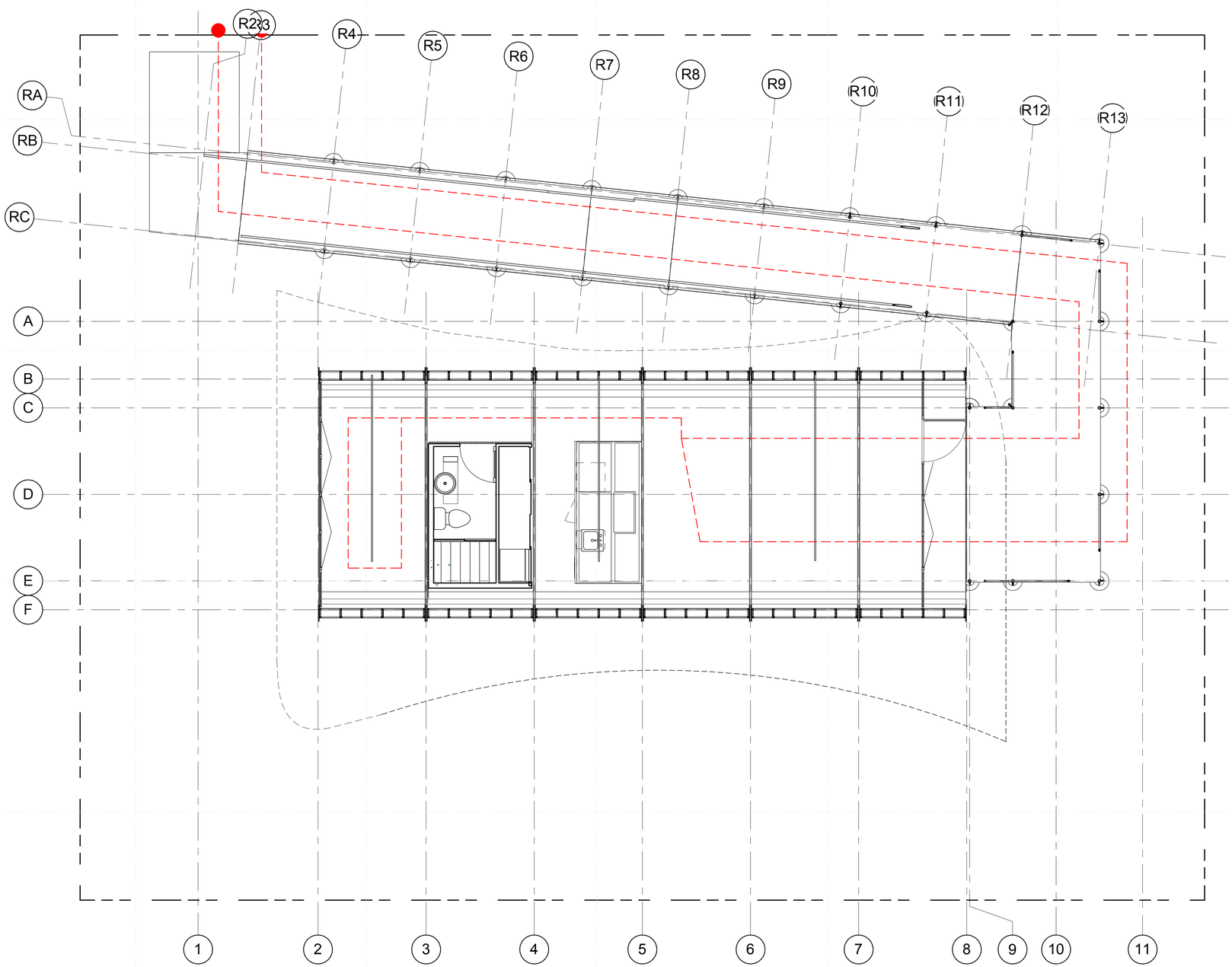

A1 ADA TOUR ROUTE COMPLIANCE PLAN
1/4" = 1'-0"

0 2' 4' 8'

5/9/2011 2:09:09 PM

GENERAL SHEET NOTES

1. THRESHHOLD IS COMPLIANT. SEE DETAIL B5 IN SHEET A-531

REFERENCE KEYNOTES

SHEET KEYNOTES

teamhawai'i

halepilihonua

TEAM NAME:	UNIVERSITY OF HAWAII (TEAM HAWAII)
ADDRESS:	UNIVERSITY OF HAWAI'I AT MĀNOA 2410 CAMPUS ROAD HONOLULU, HI 96822
CONTACT:	ROCKWOOD@ARCH.HAWAII.EDU WWW.SOLAR.HAWAII.EDU

CONSULTANTS

ARCHITECTURE:

ENGINEERS:

LANDSCAPING:

CODE CONSULTANTS:

CLIENT

U.S. DEPARTMENT OF ENERGY

SOLAR DECATHLON 2011

WWW.SOLARDECATHLON.GOV

U.S. DEPARTMENT OF ENERGY SOLAR DECATHLON

MARK	DATE	DESCRIPTION

LOT NUMBER:	306
DRAWN BY:	UNIVERSITY OF HAWAI'I
CHECKED BY:	Checker
COPYRIGHT:	UNIVERSITY OF HAWAI'I SCHOOL OF ARCHITECTURE

SHEET TITLE

ADA TOUR ROUTE COMPLIANCE PLAN

G-103

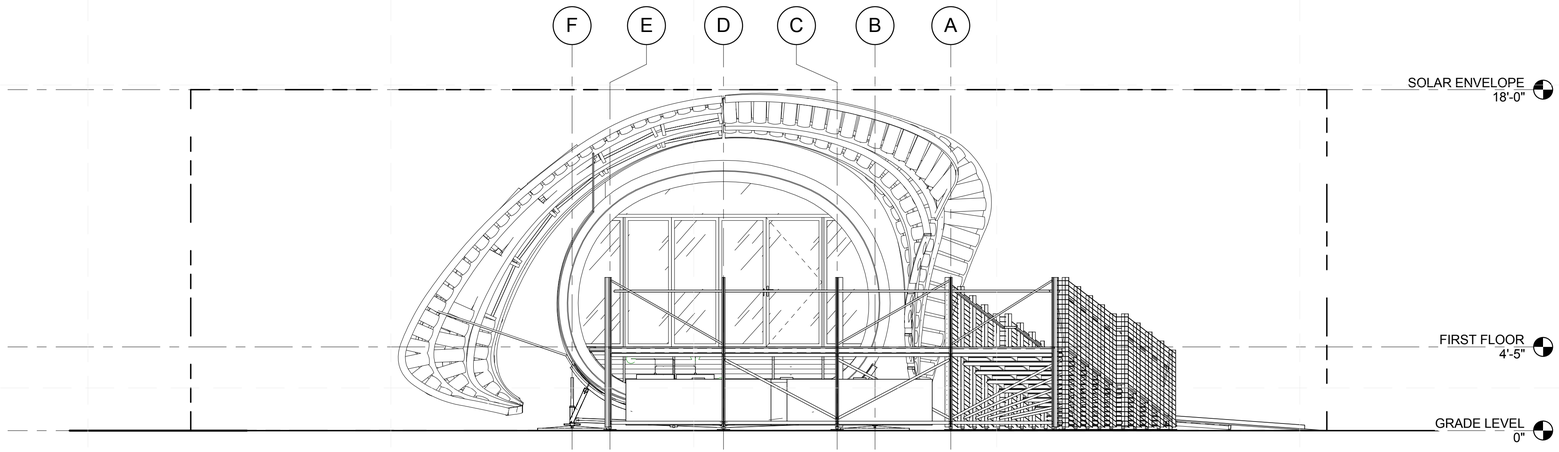

C1 SOLAR ENVELOPE EAST ELEVATION
1/4" = 1'-0"

0 2' 4' 8'

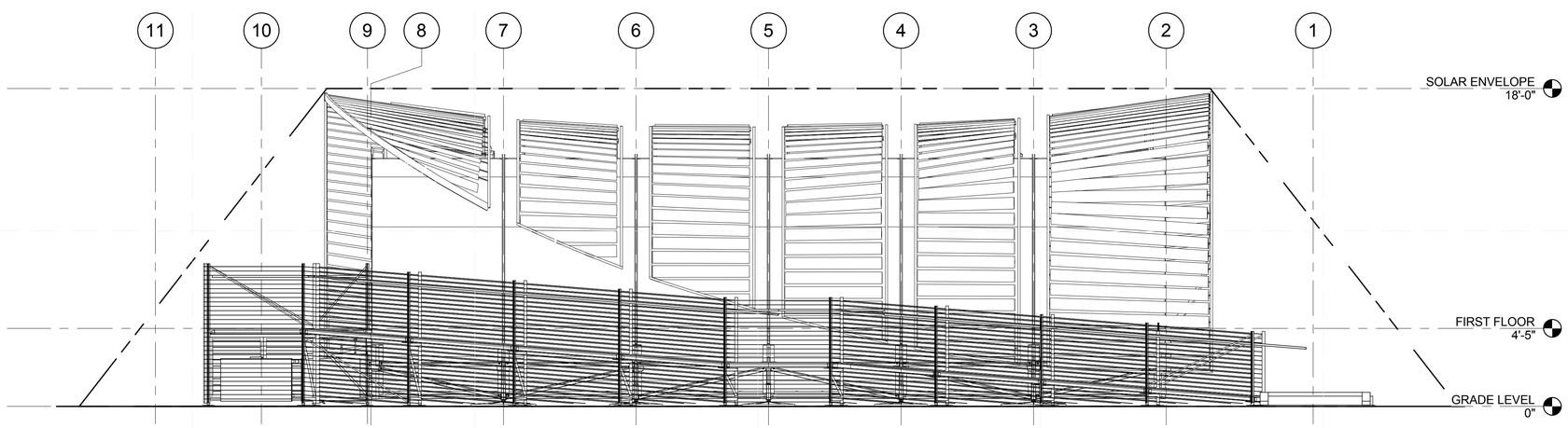

A1 SOLAR ENVELOPE NORTH ELEVATION
1/4" = 1'-0"

0 2' 4' 8'

GENERAL SHEET NOTES

1. GENERAL SHEET NOTES
2. GENERAL SHEET NOTES 2
3. GENERAL SHEET NOTES 3
4. GENERAL SHEET NOTES 4
5. GENERAL SHEET NOTES 5
6. GENERAL SHEET NOTES 6
7. GENERAL SHEET NOTES 7
8. GENERAL SHEET NOTES 8

REFERENCE KEYNOTES

SHEET KEYNOTES

teamhawai'i

halepilihonua

TEAM NAME: UNIVERSITY OF HAWAII (TEAM HAWAII)

ADDRESS: UNIVERSITY OF HAWAI'I AT MĀNOA
2410 CAMPUS ROAD
HONOLULU, HI 96822

CONTACT: ROCKWOOD@ARCH.HAWAII.EDU
WWW.SOLAR.HAWAII.EDU

CONSULTANTS

ARCHITECTURE:

ENGINEERS:

LANDSCAPING:

CODE CONSULTANTS:

CLIENT

U.S. DEPARTMENT OF ENERGY

SOLAR DECATHLON 2011

WWW.SOLARDECATHLON.GOV

U.S. DEPARTMENT OF ENERGY SOLAR DECATHLON

MARK	DATE	DESCRIPTION

LOT NUMBER:	306
DRAWN BY:	UNIVERSITY OF HAWAI'I
CHECKED BY:	Checker
COPYRIGHT:	UNIVERSITY OF HAWAI'I SCHOOL OF ARCHITECTURE

SHEET TITLE

SOLAR ENVELOPE COMPLIANCE ELEVATIONS

G-201

5/6/2011 2:09:52 PM

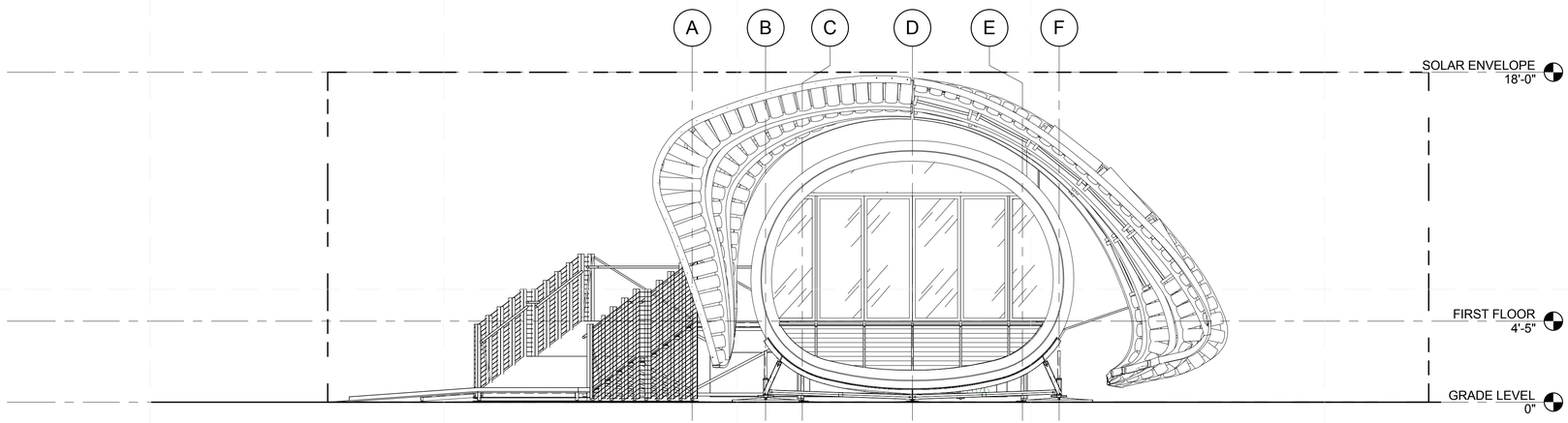

C1 SOLAR ENVELOPE WEST ELEVATION
1/4" = 1'-0"

0 2' 4' 8'

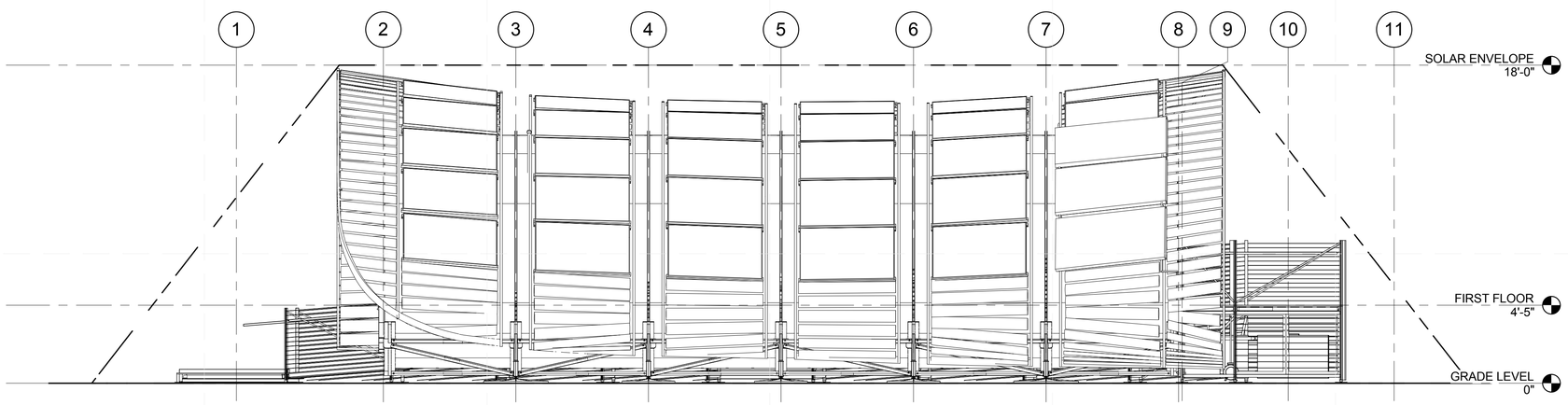

A1 SOLAR ENVELOPE SOUTH ELEVATION
1/4" = 1'-0"

0 2' 4' 8'

GENERAL SHEET NOTES

1. GENERAL SHEET NOTES
2. GENERAL SHEET NOTES 2
3. GENERAL SHEET NOTES 3
4. GENERAL SHEET NOTES 4
5. GENERAL SHEET NOTES 5
6. GENERAL SHEET NOTES 6
7. GENERAL SHEET NOTES 7
8. GENERAL SHEET NOTES 8

REFERENCE KEYNOTES

SHEET KEYNOTES

teamhawai'i

halepilihonua

TEAM NAME: UNIVERSITY OF HAWAII (TEAM HAWAII)

ADDRESS: UNIVERSITY OF HAWAI'I AT MĀNOA
2410 CAMPUS ROAD
HONOLULU, HI 96822

CONTACT: ROCKWOOD@ARCH.HAWAII.EDU
WWW.SOLAR.HAWAII.EDU

CONSULTANTS

ARCHITECTURE:

ENGINEERS:

LANDSCAPING:

CODE CONSULTANTS:

CLIENT

U.S. DEPARTMENT OF ENERGY
SOLAR DECATHLON 2011
WWW.SOLARDECATHLON.GOV

U.S. DEPARTMENT OF ENERGY SOLAR DECATHLON

MARK	DATE	DESCRIPTION

LOT NUMBER:	306
DRAWN BY:	UNIVERSITY OF HAWAI'I
CHECKED BY:	Checker
COPYRIGHT:	UNIVERSITY OF HAWAI'I SCHOOL OF ARCHITECTURE

SHEET TITLE

SOLAR ENVELOPE COMPLIANCE ELEVATIONS

G-202

5/8/2011 2:10:27 PM

GENERAL SHEET NOTES

REFERENCE KEYNOTES

SHEET KEYNOTES

teamhawai'i

halepilihonua

TEAM NAME: UNIVERSITY OF HAWAII (TEAM HAWAII)

ADDRESS: UNIVERSITY OF HAWAI'I AT MĀNOA
2410 CAMPUS ROAD
HONOLULU, HI 96822

CONTACT: ROCKWOOD@ARCH.HAWAII.EDU
WWW.SOLAR.HAWAII.EDU

CONSULTANTS

ARCHITECTURE:

ENGINEERS:

LANDSCAPING:

CODE CONSULTANTS:

CLIENT

U.S. DEPARTMENT OF ENERGY

SOLAR DECATHLON 2011

WWW.SOLARDECATHLON.GOV

U.S. DEPARTMENT OF ENERGY SOLAR DECATHLON

MARK	DATE	DESCRIPTION

LOT NUMBER:	306
DRAWN BY:	UNIVERSITY OF HAWAI'I
CHECKED BY:	Checker
COPYRIGHT:	UNIVERSITY OF HAWAI'I SCHOOL OF ARCHITECTURE

SHEET TITLE

SHADING DIAGRAMS

G-601

5/6/2011 2:10:38 PM

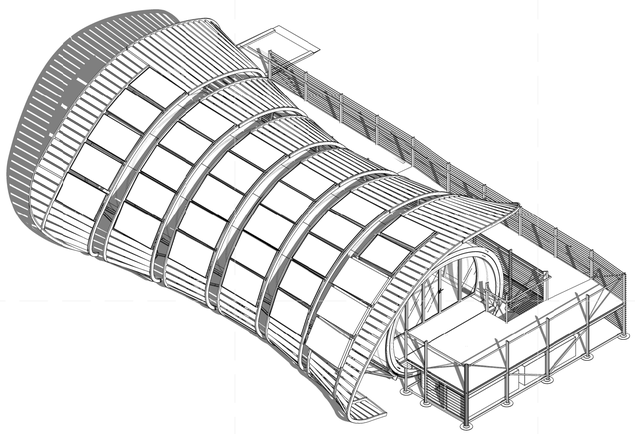

C1 SHADED PERSPECTIVE - 9 AM

0 4' 8' 16'

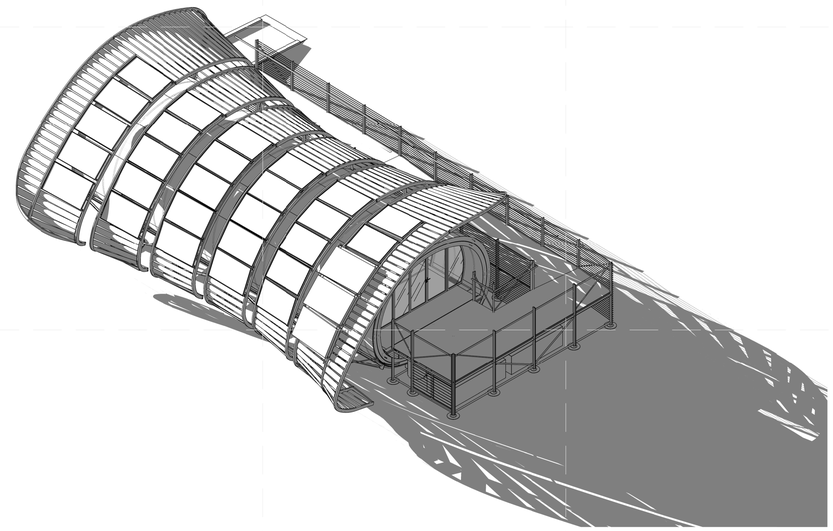

C4 SHADED PERSPECTIVE - 5 PM

0 4' 8' 16'

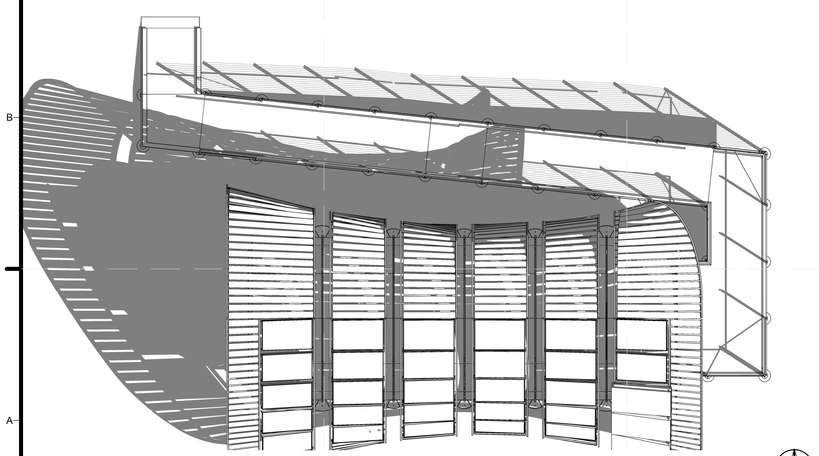

A1 SHADED PLAN VIEW - 9 AM

0 4' 8' 16'

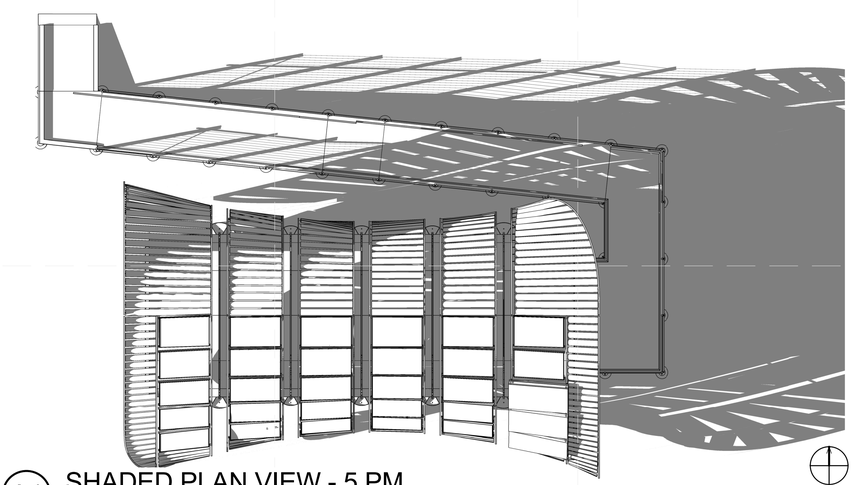

A4 SHADED PLAN VIEW - 5 PM

0 4' 8' 16'

GENERAL SHEET NOTES

1. GENERAL SHEET NOTES
2. GENERAL SHEET NOTES 2
3. GENERAL SHEET NOTES 3
4. GENERAL SHEET NOTES 4
5. GENERAL SHEET NOTES 5
6. GENERAL SHEET NOTES 6
7. GENERAL SHEET NOTES 7
8. GENERAL SHEET NOTES 8

REFERENCE KEYNOTES

SHEET KEYNOTES

teamhawai'i

halepilihonua

TEAM NAME:	UNIVERSITY OF HAWAII (TEAM HAWAII)
ADDRESS:	UNIVERSITY OF HAWAI'I AT MĀNOA 2410 CAMPUS ROAD HONOLULU, HI 96822
CONTACT:	ROCKWOOD@ARCH.HAWAII.EDU WWW.SOLAR.HAWAII.EDU

CONSULTANTS

ARCHITECTURE:

ENGINEERS:

LANDSCAPING:

CODE CONSULTANTS:

CLIENT

U.S. DEPARTMENT OF ENERGY

SOLAR DECATHLON 2011

WWW.SOLARDECATHLON.GOV

U.S. DEPARTMENT OF ENERGY SOLAR DECATHLON

MARK	DATE	DESCRIPTION

LOT NUMBER:	306
DRAWN BY:	UNIVERSITY OF HAWAI'I
CHECKED BY:	Checker
COPYRIGHT:	UNIVERSITY OF HAWAI'I SCHOOL OF ARCHITECTURE

SHEET TITLE

EXTERIOR SHADING STUDIES

G-602

5/9/2011 2:15:45 PM

teamhawai'i

halepilihonua

TEAM NAME:	UNIVERSITY OF HAWAII (TEAM HAWAII)
ADDRESS:	UNIVERSITY OF HAWAI'I AT MĀNOA 2410 CAMPUS ROAD HONOLULU, HI 96822
CONTACT:	ROCKWOOD@ARCH.HAWAII.EDU WWW.SOLAR.HAWAII.EDU

CONSULTANTS

ARCHITECTURE:

ENGINEERS:

LANDSCAPING:

CODE CONSULTANTS:

CLIENT

U.S. DEPARTMENT OF ENERGY

SOLAR DECATHLON 2011

WWW.SOLARDECATHLON.GOV

U.S. DEPARTMENT OF ENERGY SOLAR DECATHLON

MARK	DATE	DESCRIPTION

LOT NUMBER:	306
DRAWN BY:	UNIVERSITY OF HAWAI'I
CHECKED BY:	Checker
COPYRIGHT:	UNIVERSITY OF HAWAI'I SCHOOL OF ARCHITECTURE

SHEET TITLE

GENERAL PROJECT RENDERINGS

G-901

5/8/2011 2:15:47 PM

teamhawai'i

halepilihonua

TEAM NAME:	UNIVERSITY OF HAWAII (TEAM HAWAII)
ADDRESS:	UNIVERSITY OF HAWAI'I AT MĀNOA 2410 CAMPUS ROAD HONOLULU, HI 96822
CONTACT:	ROCKWOOD@ARCH.HAWAII.EDU WWW.SOLAR.HAWAII.EDU

CONSULTANTS

ARCHITECTURE:

ENGINEERS:

LANDSCAPING:

CODE CONSULTANTS:

CLIENT

U.S. DEPARTMENT OF ENERGY

SOLAR DECATHLON 2011

WWW.SOLARDECATHLON.GOV

U.S. DEPARTMENT OF ENERGY SOLAR DECATHLON

MARK	DATE	DESCRIPTION

LOT NUMBER:	306
DRAWN BY:	UNIVERSITY OF HAWAI'I
CHECKED BY:	Checker
COPYRIGHT:	UNIVERSITY OF HAWAI'I SCHOOL OF ARCHITECTURE

SHEET TITLE

GENERAL PROJECT RENDERINGS

G-902

5/8/2011 2:15:49 PM

teamhawai'i

halepilihonua

TEAM NAME:	UNIVERSITY OF HAWAII (TEAM HAWAII)
ADDRESS:	UNIVERSITY OF HAWAI'I AT MĀNOA 2410 CAMPUS ROAD HONOLULU, HI 96822
CONTACT:	ROCKWOOD@ARCH.HAWAII.EDU WWW.SOLAR.HAWAII.EDU

CONSULTANTS

ARCHITECTURE:

ENGINEERS:

LANDSCAPING:

CODE CONSULTANTS:

CLIENT

U.S. DEPARTMENT OF ENERGY

SOLAR DECATHLON 2011

WWW.SOLARDECATHLON.GOV

U.S. DEPARTMENT OF ENERGY SOLAR DECATHLON

MARK	DATE	DESCRIPTION

LOT NUMBER:	306
DRAWN BY:	UNIVERSITY OF HAWAI'I
CHECKED BY:	CHECKER
COPYRIGHT:	UNIVERSITY OF HAWAI'I SCHOOL OF ARCHITECTURE

SHEET TITLE

HAZARDOUS MATERIALS NOTES AND SYMBOLS

H-001

5/8/2011 2:15:51 PM

teamhawai'i

halepilihonua

TEAM NAME:	UNIVERSITY OF HAWAII (TEAM HAWAII)
ADDRESS:	UNIVERSITY OF HAWAI'I AT MĀNOA 2410 CAMPUS ROAD HONOLULU, HI 96822
CONTACT:	ROCKWOOD@ARCH.HAWAII.EDU WWW.SOLAR.HAWAII.EDU

CONSULTANTS

ARCHITECTURE:	
ENGINEERS:	
LANDSCAPING:	
CODE CONSULTANTS:	

CLIENT

U.S. DEPARTMENT OF ENERGY

SOLAR DECATHLON 2011

WWW.SOLARDECATHLON.GOV

U.S. DEPARTMENT OF ENERGY SOLAR DECATHLON

MARK	DATE	DESCRIPTION

LOT NUMBER:	306
DRAWN BY:	UNIVERSITY OF HAWAI'I
CHECKED BY:	CHECKER
COPYRIGHT:	UNIVERSITY OF HAWAI'I SCHOOL OF ARCHITECTURE

SHEET TITLE

LIQUID LOCATION AND SPILL CONTAINMENT PLAN

H-101

5/8/2011 2:15:53 PM

teamhawai'i

halepilihonua

TEAM NAME:	UNIVERSITY OF HAWAII (TEAM HAWAII)
ADDRESS:	UNIVERSITY OF HAWAI'I AT MĀNOA 2410 CAMPUS ROAD HONOLULU, HI 96822
CONTACT:	ROCKWOOD@ARCH.HAWAII.EDU WWW.SOLAR.HAWAII.EDU

CONSULTANTS

ARCHITECTURE:	
ENGINEERS:	
LANDSCAPING:	
CODE CONSULTANTS:	

CLIENT

U.S. DEPARTMENT OF ENERGY

SOLAR DECATHLON 2011

WWW.SOLARDECATHLON.GOV

U.S. DEPARTMENT OF ENERGY SOLAR DECATHLON

MARK	DATE	DESCRIPTION

LOT NUMBER:	306
DRAWN BY:	UNIVERSITY OF HAWAI'I
CHECKED BY:	CHECKER
COPYRIGHT:	UNIVERSITY OF HAWAI'I SCHOOL OF ARCHITECTURE

SHEET TITLE

SPILL CONTAINMENT DETAILS

H-501

5/8/2011 2:15:55 PM

teamhawai'i

halepilihonua

TEAM NAME:	UNIVERSITY OF HAWAII (TEAM HAWAII)
ADDRESS:	UNIVERSITY OF HAWAI'I AT MĀNOA 2410 CAMPUS ROAD HONOLULU, HI 96822
CONTACT:	ROCKWOOD@ARCH.HAWAII.EDU WWW.SOLAR.HAWAII.EDU

CONSULTANTS

ARCHITECTURE:

ENGINEERS:

LANDSCAPING:

CODE CONSULTANTS:

CLIENT

U.S. DEPARTMENT OF ENERGY

SOLAR DECATHLON 2011

WWW.SOLARDECATHLON.GOV

U.S. DEPARTMENT OF ENERGY SOLAR DECATHLON

MARK	DATE	DESCRIPTION

LOT NUMBER:	306
DRAWN BY:	UNIVERSITY OF HAWAI'I
CHECKED BY:	CHECKER
COPYRIGHT:	UNIVERSITY OF HAWAI'I SCHOOL OF ARCHITECTURE

SHEET TITLE

SCHEDULE OF LIQUID CONTAINMENT DEVICES

H-601

5/8/2011 2:15:58 PM

teamhawai'i

halepilihonua

TEAM NAME:	UNIVERSITY OF HAWAII (TEAM HAWAII)
ADDRESS:	UNIVERSITY OF HAWAI'I AT MĀNOA 2410 CAMPUS ROAD HONOLULU, HI 96822
CONTACT:	ROCKWOOD@ARCH.HAWAII.EDU WWW.SOLAR.HAWAII.EDU

CONSULTANTS

ARCHITECTURE:

ENGINEERS:

LANDSCAPING:

CODE CONSULTANTS:

CLIENT

U.S. DEPARTMENT OF ENERGY

SOLAR DECATHLON 2011

WWW.SOLARDECATHLON.GOV

U.S. DEPARTMENT OF ENERGY SOLAR DECATHLON

MARK	DATE	DESCRIPTION

LOT NUMBER:	306
DRAWN BY:	UNIVERSITY OF HAWAI'I
CHECKED BY:	CHECKER
COPYRIGHT:	UNIVERSITY OF HAWAI'I SCHOOL OF ARCHITECTURE

SHEET TITLE

SURVEY DRAWINGS
(DELETE IF NOT USED)

V-001

5/6/2011 5:36:57 PM

GENERAL SHEET NOTES

REFERENCE KEYNOTES

SHEET KEYNOTES

teamhawai'i

halepilihonua

TEAM NAME: UNIVERSITY OF HAWAII (TEAM HAWAII)

ADDRESS: UNIVERSITY OF HAWAI'I AT MĀNOA
2410 CAMPUS ROAD
HONOLULU, HI 96822

CONTACT: ROCKWOOD@ARCH.HAWAII.EDU
WWW.SOLAR.HAWAII.EDU

CONSULTANTS

ARCHITECTURE:

ENGINEERS:

LANDSCAPING:

CODE CONSULTANTS:

CLIENT

U.S. DEPARTMENT OF ENERGY

SOLAR DECATHLON 2011

WWW.SOLARDECATHLON.GOV

U.S. DEPARTMENT OF ENERGY SOLAR DECATHLON

MARK	DATE	DESCRIPTION

LOT NUMBER:	306
DRAWN BY:	UNIVERSITY OF HAWAI'I
CHECKED BY:	CHECKER
COPYRIGHT:	UNIVERSITY OF HAWAI'I SCHOOL OF ARCHITECTURE

SHEET TITLE

CIVIL NOTES AND SYMBOLS

C-001

5/8/2011 2:02:03 PM

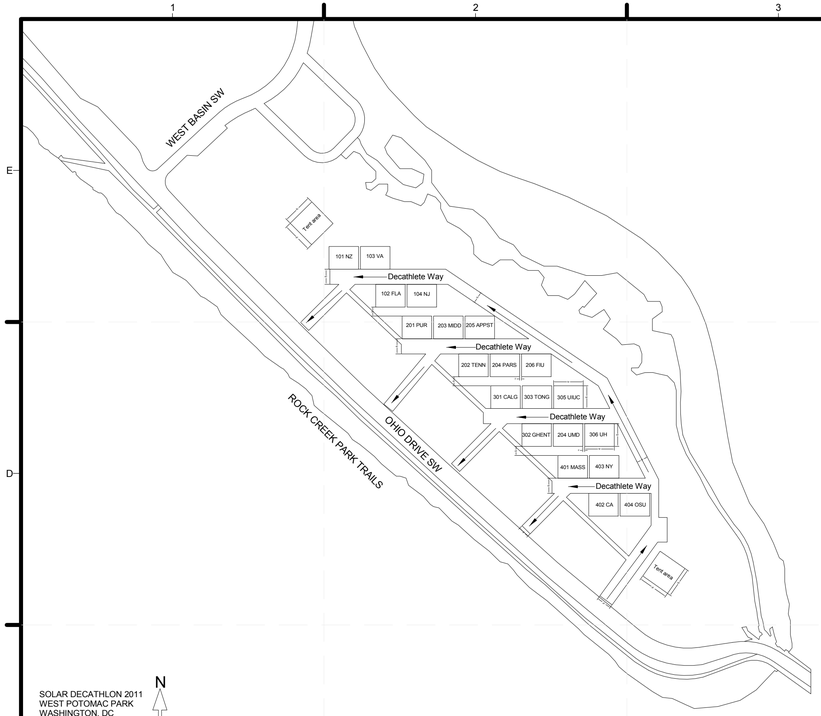

SOLAR DECATHLON 2011
WEST POTOMAC PARK
WASHINGTON, DC

N

C1 WEST POTOMAC PARK SITE MAP
1" = 200'-0"

0 200' 400'

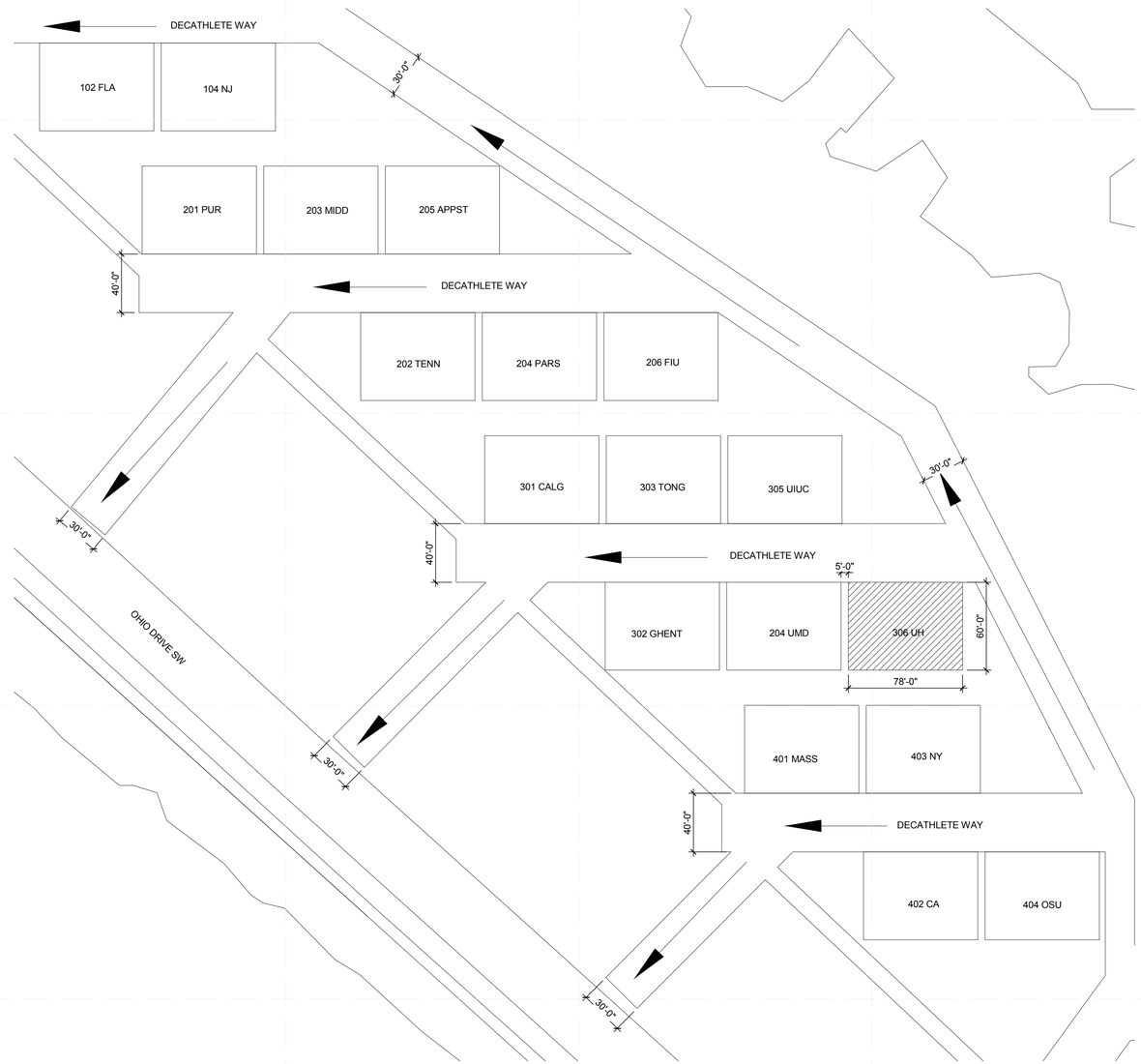

A4 DECATHLETE VILLAGE MAP
1" = 50'-0"

0 50' 100'

teamhawai'i
halepilihonua

TEAM NAME: UNIVERSITY OF HAWAII (TEAM HAWAII)
ADDRESS: UNIVERSITY OF HAWAI'I AT MĀNOA
2410 CAMPUS ROAD
HONOLULU, HI 96822
CONTACT: ROCKWOOD@ARCH.HAWAII.EDU
WWW.SOLAR.HAWAII.EDU

CONSULTANTS
ARCHITECTURE:
ENGINEERS:
LANDSCAPING:
CODE CONSULTANTS:

CLIENT
U.S. DEPARTMENT OF ENERGY
SOLAR DECATHLON 2011
WWW.SOLARDECATHLON.GOV

U.S. DEPARTMENT OF ENERGY
SOLAR DECATHLON

MARK	DATE	DESCRIPTION

LOT NUMBER: 306
DRAWN BY: UNIVERSITY OF HAWAI'I
CHECKED BY: Checker
COPYRIGHT: UNIVERSITY OF HAWAI'I
SCHOOL OF ARCHITECTURE

SHEET TITLE
SITE LOCATION MAP

C-100

5/8/2011 2:02:06 PM

FOOTING SCHEDULE						
PAD	QUANTITY	SIZE DIA	AREA (SF)	ALLOWABLE LOAD (1500 LBS/SQ. FT. MAXIMUM)	ALLOWABLE LOAD (1000 LBS/SQ. FT. MINIMUM) (250/SF RAMP)	DESIGN LOAD
A (RAMP)	33	1'-7"	2.0	3,000	450	2,700
B (SUBSTRUCT)	4	3'-8"	10.6	15,900	10,600	15,700
C (SUBSTRUCT)	6	3'-0"	7.1	10,650	7,100	10,100

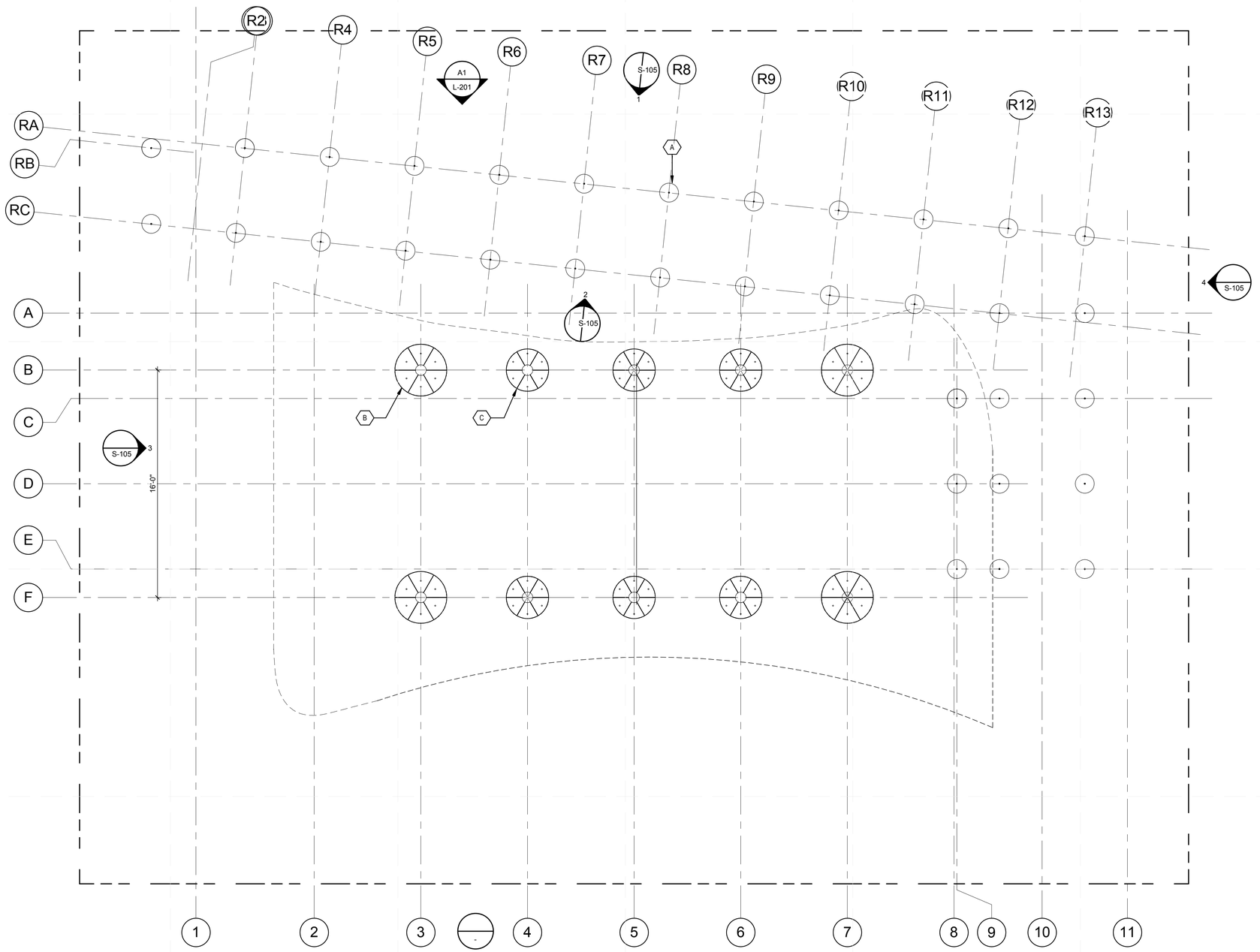

A1 GROUND CONTACT PLAN
1/4" = 1'-0"

0 2' 4' 8'

5/9/2011 2:02:13 PM

GENERAL SHEET NOTES

1. FOR WATER TANK FOOTINGS, SEE M-104 MECHANICAL GROUND CONTACT PLAN

REFERENCE KEYNOTES

SHEET KEYNOTES

A TYPICAL RAMP FOOTING
B TYPICAL END FOOTING SUBSTRUCTURE
C TYPICAL INTERMEDIATE FOOTING SUBSTRUCTURE

teamhawai'i
halepilihonua

TEAM NAME: UNIVERSITY OF HAWAII (TEAM HAWAII)
ADDRESS: UNIVERSITY OF HAWAI'I AT MĀNOA
2410 CAMPUS ROAD
HONOLULU, HI 96822
CONTACT: ROCKWOOD@ARCH.HAWAII.EDU
WWW.SOLAR.HAWAII.EDU

CONSULTANTS
ARCHITECTURE:
ENGINEERS:
LANDSCAPING:
CODE CONSULTANTS:

CLIENT
U.S. DEPARTMENT OF ENERGY
SOLAR DECATHLON 2011
WWW.SOLARDECATHLON.GOV

U.S. DEPARTMENT OF ENERGY SOLAR DECATHLON

MARK	DATE	DESCRIPTION

LOT NUMBER: 306
DRAWN BY: UNIVERSITY OF HAWAI'I
CHECKED BY: CHECKER

COPYRIGHT: UNIVERSITY OF HAWAI'I SCHOOL OF ARCHITECTURE

SHEET TITLE
GROUND CONTACT PLAN

C-101

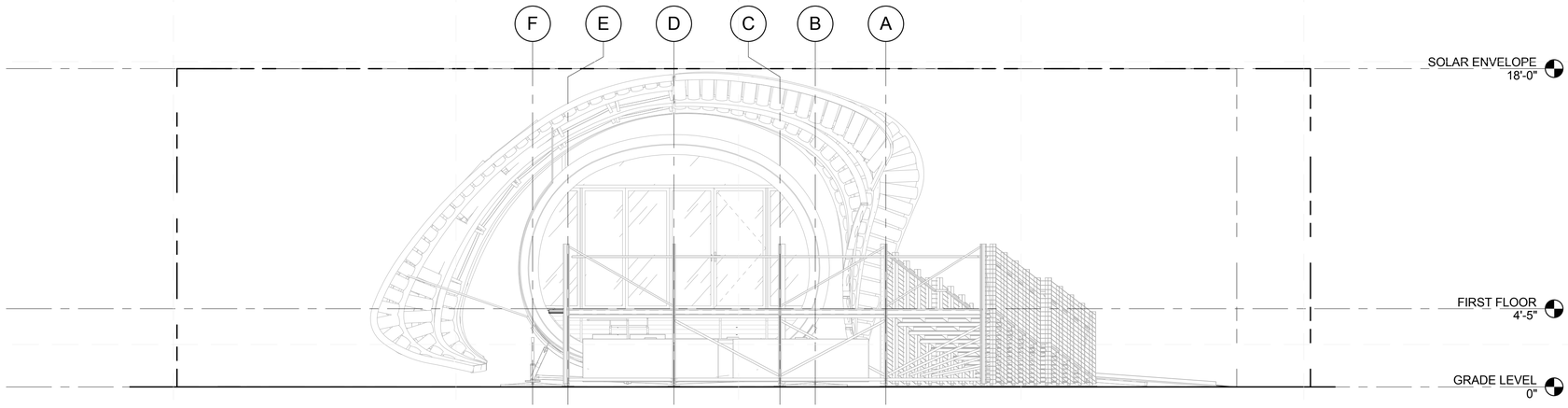

C1 EAST SITE ELEVATION
1/4" = 1'-0"

0 2' 4' 8'

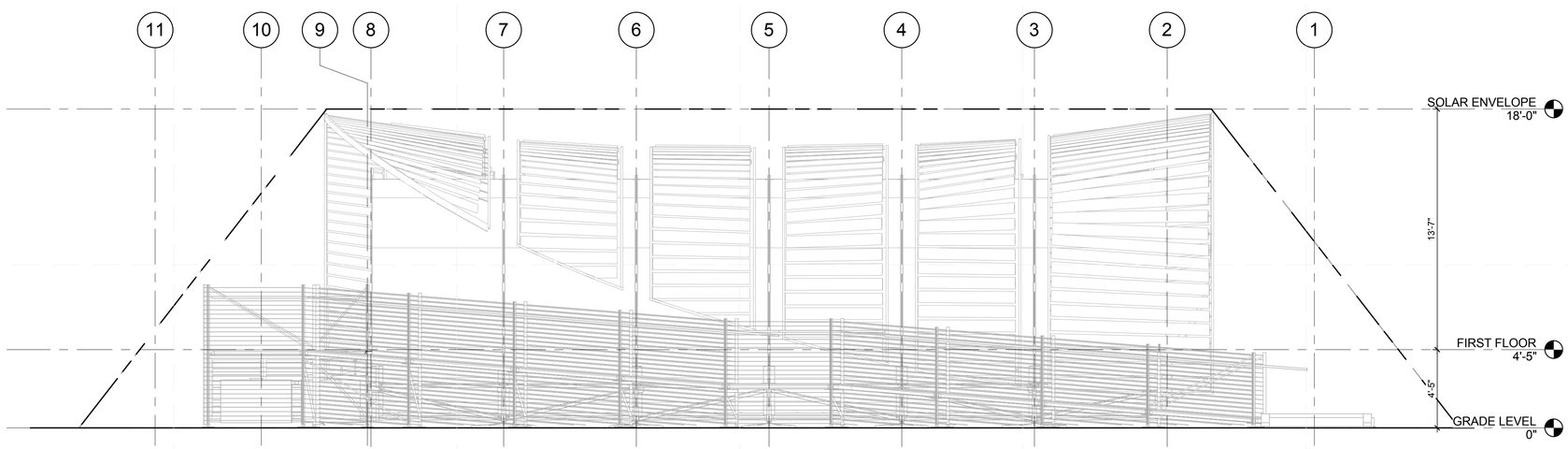

A1 NORTH SITE ELEVATION
1/4" = 1'-0"

0 2' 4' 8'

GENERAL SHEET NOTES

1. GENERAL SHEET NOTES
2. GENERAL SHEET NOTES 2
3. GENERAL SHEET NOTES 3
4. GENERAL SHEET NOTES 4
5. GENERAL SHEET NOTES 5FA FDAFDAFDASF D FDASDFSAFDASFDAS FA FAF
6. GENERAL SHEET NOTES 6
7. GENERAL SHEET NOTES 7
8. GENERAL SHEET NOTES 8

REFERENCE KEYNOTES

SHEET KEYNOTES

teamhawai'i

halepilihonua

TEAM NAME: UNIVERSITY OF HAWAII (TEAM HAWAII)

ADDRESS: UNIVERSITY OF HAWAI'I AT MĀNOA
2410 CAMPUS ROAD
HONOLULU, HI 96822

CONTACT: ROCKWOOD@ARCH.HAWAII.EDU
WWW.SOLAR.HAWAII.EDU

CONSULTANTS

ARCHITECTURE:

ENGINEERS:

LANDSCAPING:

CODE CONSULTANTS:

CLIENT

U.S. DEPARTMENT OF ENERGY

SOLAR DECATHLON 2011

WWW.SOLARDECATHLON.GOV

U.S. DEPARTMENT OF ENERGY SOLAR DECATHLON

MARK	DATE	DESCRIPTION

LOT NUMBER:	306
DRAWN BY:	UNIVERSITY OF HAWAI'I
CHECKED BY:	Checker
COPYRIGHT:	UNIVERSITY OF HAWAI'I SCHOOL OF ARCHITECTURE

SHEET TITLE

SITE ELEVATIONS

C-104

5/6/2011 2:02:56 PM

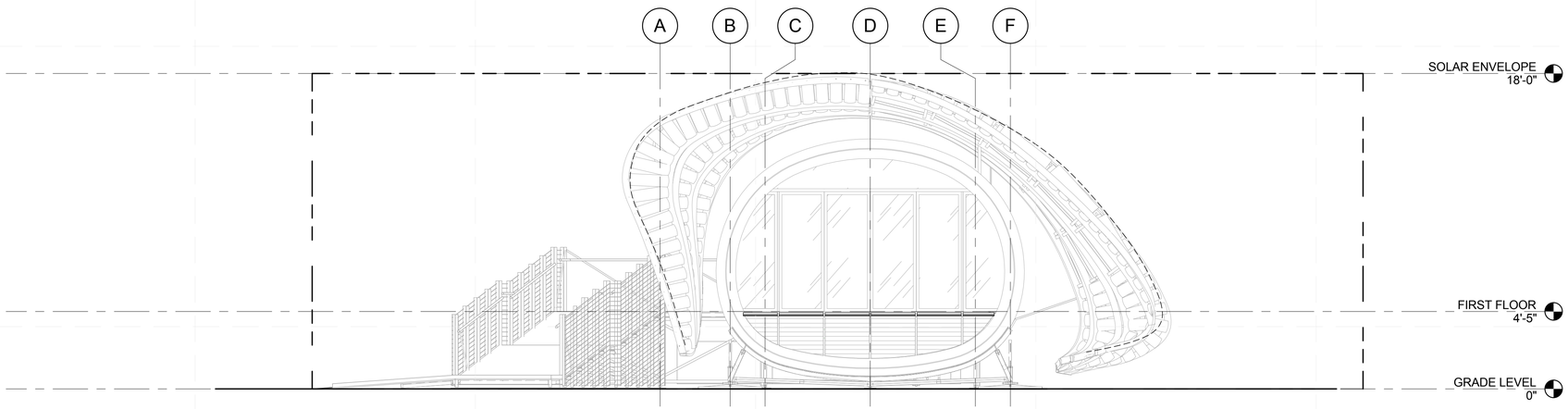

C1 WEST SITE ELEVATION
1/4" = 1'-0"

0 2' 4' 8'

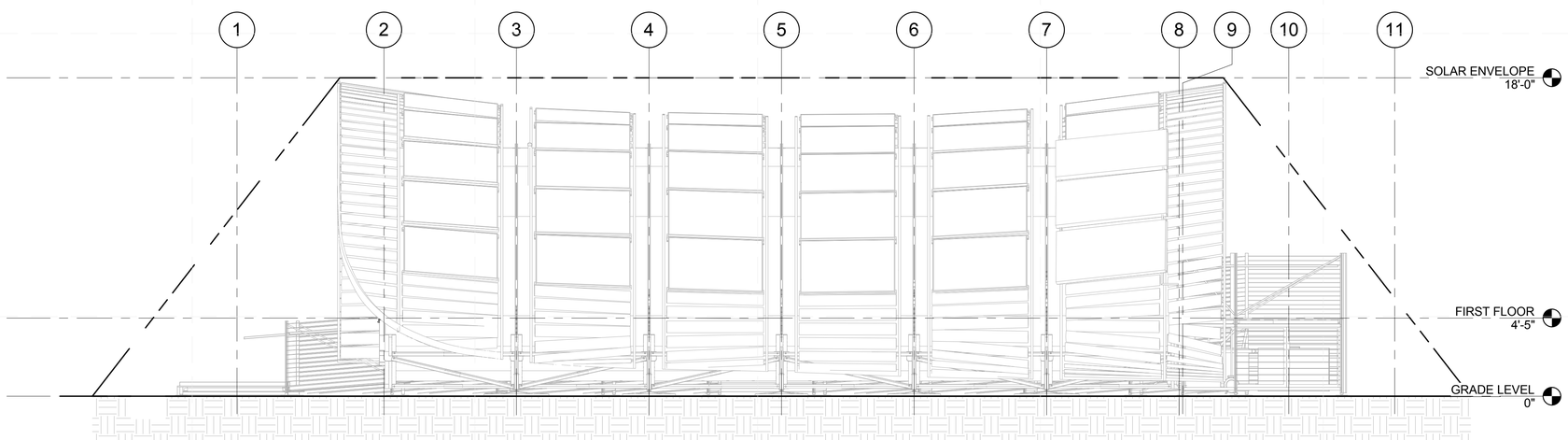

A1 SOUTH SITE ELEVATION
1/4" = 1'-0"

0 2' 4' 8'

GENERAL SHEET NOTES

1. GENERAL SHEET NOTES
2. GENERAL SHEET NOTES 2
3. GENERAL SHEET NOTES 3
4. GENERAL SHEET NOTES 4
5. GENERAL SHEET NOTES 5
6. GENERAL SHEET NOTES 6
7. GENERAL SHEET NOTES 7
8. GENERAL SHEET NOTES 8

REFERENCE KEYNOTES

SHEET KEYNOTES

teamhawai'i

halepilihonua

TEAM NAME:	UNIVERSITY OF HAWAII (TEAM HAWAII)
ADDRESS:	UNIVERSITY OF HAWAI'I AT MĀNOA 2410 CAMPUS ROAD HONOLULU, HI 96822
CONTACT:	ROCKWOOD@ARCH.HAWAII.EDU WWW.SOLAR.HAWAII.EDU

CONSULTANTS

ARCHITECTURE:

ENGINEERS:

LANDSCAPING:

CODE CONSULTANTS:

CLIENT

U.S. DEPARTMENT OF ENERGY

SOLAR DECATHLON 2011

WWW.SOLARDECATHLON.GOV

U.S. DEPARTMENT OF ENERGY SOLAR DECATHLON

MARK	DATE	DESCRIPTION

LOT NUMBER:	306
DRAWN BY:	UNIVERSITY OF HAWAI'I
CHECKED BY:	Checker
COPYRIGHT:	UNIVERSITY OF HAWAI'I SCHOOL OF ARCHITECTURE

SHEET TITLE

SITE ELEVATIONS

C-105

5/8/2011 2:03:28 PM

LANDSCAPING NOTES

1. AN AQUAPONICS SYSTEM WILL BE USED IN CONJUCTION WITH GRAY WATER RECOVERY IN ORDER TO DISPLAY ITS FUNCTIONS AS A FULLY SUSTAINABLE AND RENEWABLE SYSTEM.
2. THE AQUAPONICS SYSTEM WILLL START OF WITH 50 GALLONS OF TEAM PROVIDED WATER AND WILL GROW AS THE SANITARY WATER TANK IS FILLED AFTER WATER USAGE IN THE HOUSE. WATER WILL FEED INTO WETLAND TANKS WHERE THE PH OF THE WATER WILL BE BALANCED BY THE PLANTS. FROM HERE THE WATER WILL BE GRAVITY FED INTO OTHER TANKS. AS THE AMOUNT OF GRAY WATER INCREASES SO WILL THE AQUAPONICS SYSTEM.
3. THE AQUAPONICS SYSTEM WILL BE CAREFULLY DRAINED AT THE END OF COMPETITION TO ENSURE NO SPILLAGE. THIS WATER WILL BE PUMPED BACK INTO THE SANITARY WATER TANK TO BE AVAILABLE TO FOR WATER REMOVAL.

LANDSCAPING LEGEND

SYMBOL	ABBRV.	DESCRIPTION
	GV	GATE VALVE
	TWV	THREE WAY VALVE
	P	PUMP
		PERFORATED PVC PIPE

teamhawai'i

halepilihonua

TEAM NAME: UNIVERSITY OF HAWAII (TEAM HAWAII)

ADDRESS: UNIVERSITY OF HAWAI'I AT MĀNOA
2410 CAMPUS ROAD
HONOLULU, HI 96822

CONTACT: ROCKWOOD@ARCH.HAWAII.EDU
WWW.SOLAR.HAWAII.EDU

CONSULTANTS

ARCHITECTURE:

ENGINEERS:

LANDSCAPING:

CODE CONSULTANTS:

CLIENT

U.S. DEPARTMENT OF ENERGY

SOLAR DECATHLON 2011

WWW.SOLARDECATHLON.GOV

U.S. DEPARTMENT OF ENERGY SOLAR DECATHLON

MARK	DATE	DESCRIPTION

LOT NUMBER: 306

DRAWN BY: UNIVERSITY OF HAWAI'I

CHECKED BY: CHECKER

COPYRIGHT: UNIVERSITY OF HAWAI'I
SCHOOL OF ARCHITECTURE

SHEET TITLE

LANDSCAPE NOTES AND SYMBOLS

L-001

5/8/2011 2:16:20 PM

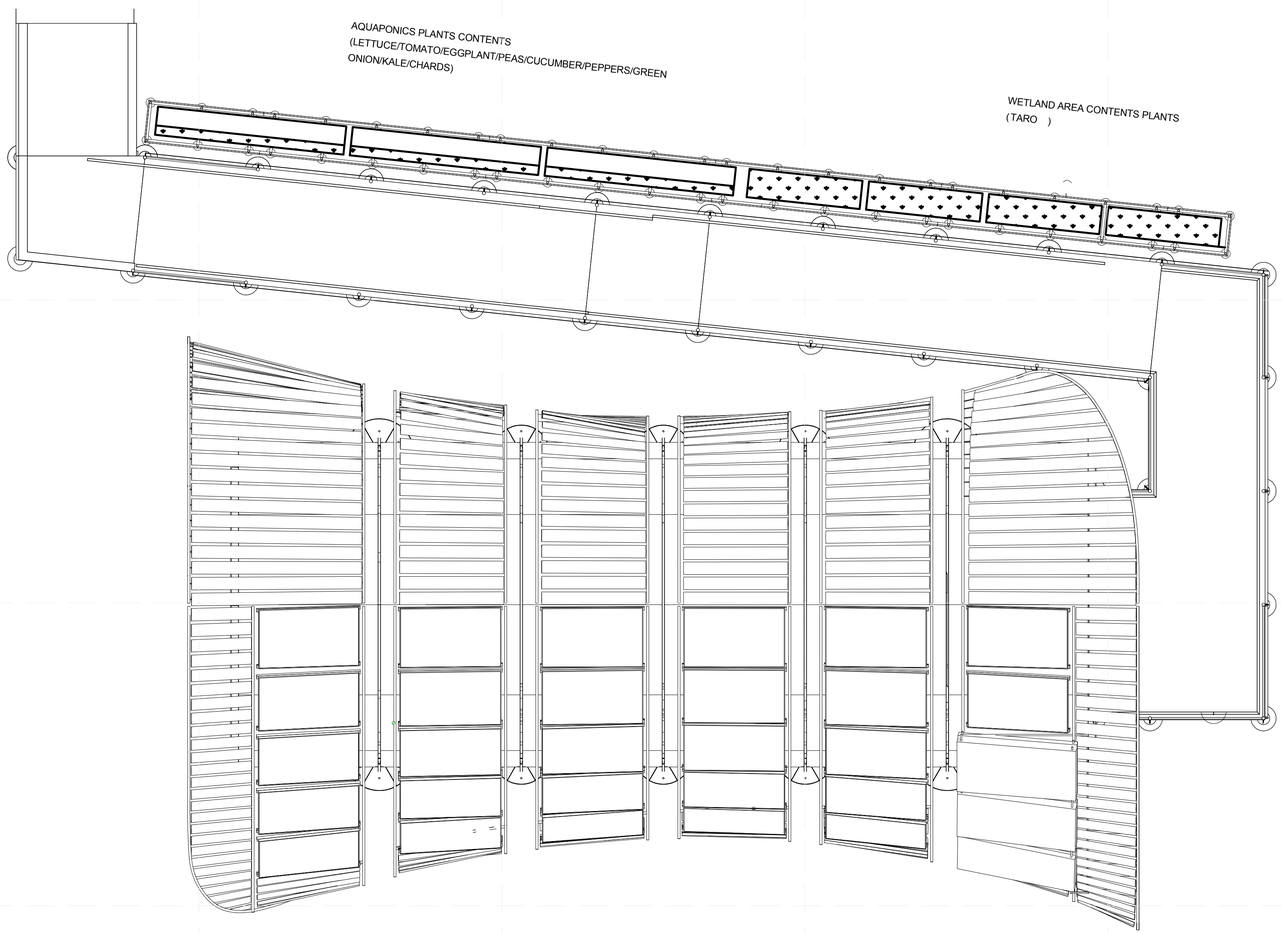

A1 LANDSCAPING SITE PLAN
1/4" = 1'-0"

0 2' 4' 8'

5/8/2011 2:16:36 PM

GENERAL SHEET NOTES

REFERENCE KEYNOTES

SHEET KEYNOTES

teamhawai'i

halepilihonua

TEAM NAME:	UNIVERSITY OF HAWAII (TEAM HAWAII)
ADDRESS:	UNIVERSITY OF HAWAI'I AT MĀNOA 2410 CAMPUS ROAD HONOLULU, HI 96822
CONTACT:	ROCKWOOD@ARCH.HAWAII.EDU WWW.SOLAR.HAWAII.EDU

CONSULTANTS

ARCHITECTURE:

ENGINEERS:

LANDSCAPING:

CODE CONSULTANTS:

CLIENT

U.S. DEPARTMENT OF ENERGY

SOLAR DECATHLON 2011

WWW.SOLARDECATHLON.GOV

U.S. DEPARTMENT OF ENERGY SOLAR DECATHLON

MARK	DATE	DESCRIPTION

LOT NUMBER:	306
DRAWN BY:	UNIVERSITY OF HAWAI'I
CHECKED BY:	CHECKER
COPYRIGHT:	UNIVERSITY OF HAWAI'I SCHOOL OF ARCHITECTURE

SHEET TITLE

LANDSCAPE SITE PLAN

L-101

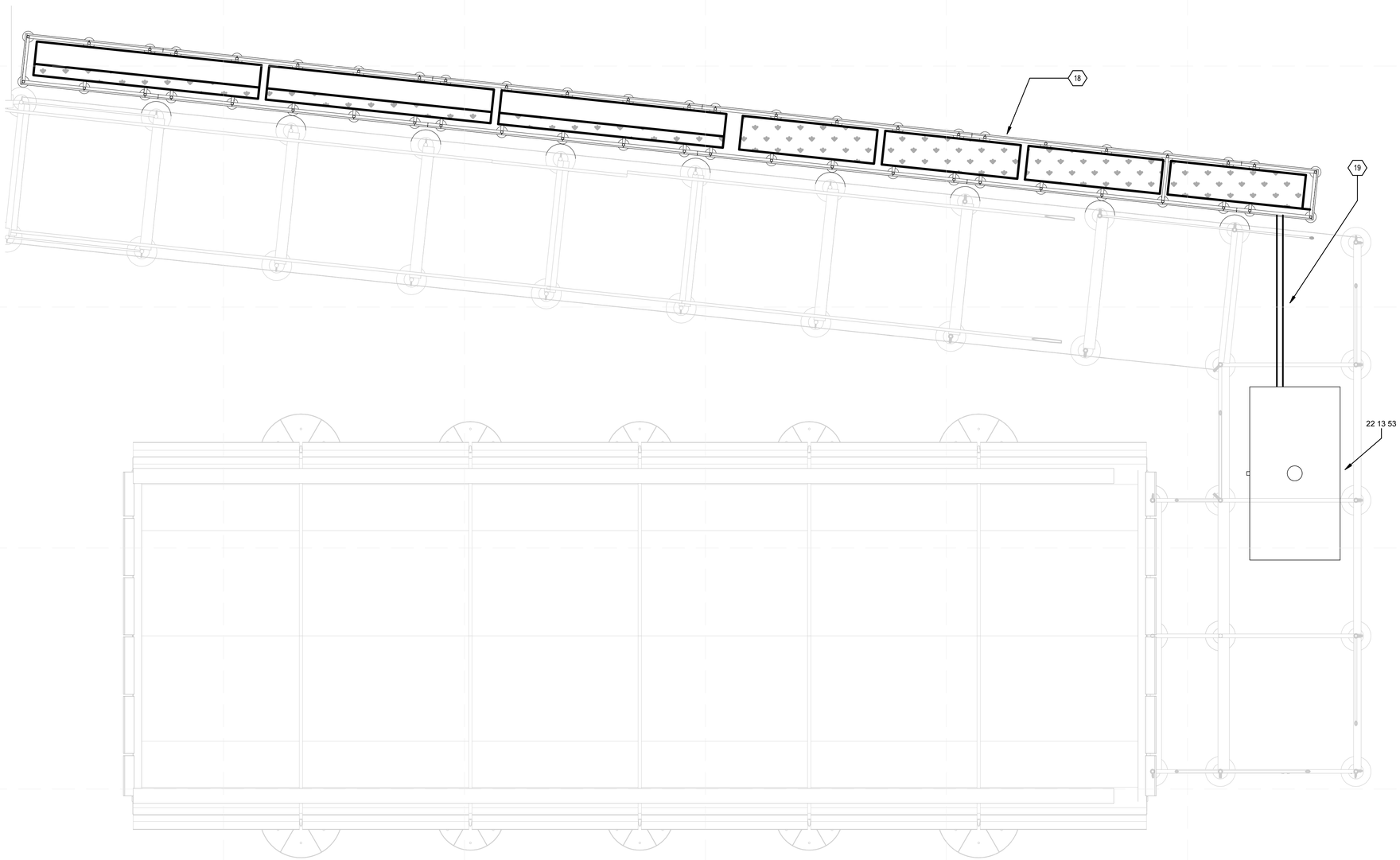

A1 LANDSCAPE IRRIGATION PLAN
3/8" = 1'-0"

0 2' 4' 8'

5/9/2011 2:16:49 PM

GENERAL SHEET NOTES

REFERENCE KEYNOTES

22 13 53	FACILITY SEPTIC TANKS

SHEET KEYNOTES

18	AQUAPONICS TANKS
19	GRAY WATER RECOVERY PIPING FOR AQUAPONICS

teamhawai'i

halepilihonua

TEAM NAME:	UNIVERSITY OF HAWAII (TEAM HAWAII)
ADDRESS:	UNIVERSITY OF HAWAI'I AT MĀNOA 2410 CAMPUS ROAD HONOLULU, HI 96822
CONTACT:	ROCKWOOD@ARCH.HAWAII.EDU WWW.SOLAR.HAWAII.EDU

CONSULTANTS

ARCHITECTURE:

ENGINEERS:

LANDSCAPING:

CODE CONSULTANTS:

CLIENT

U.S. DEPARTMENT OF ENERGY

SOLAR DECATHLON 2011

WWW.SOLARDECATHLON.GOV

U.S. DEPARTMENT OF ENERGY SOLAR DECATHLON

MARK	DATE	DESCRIPTION

LOT NUMBER:	306
DRAWN BY:	UNIVERSITY OF HAWAI'I
CHECKED BY:	Checker
COPYRIGHT:	UNIVERSITY OF HAWAI'I SCHOOL OF ARCHITECTURE

SHEET TITLE

LANDSCAPE IRRIGATION PLAN

L-102

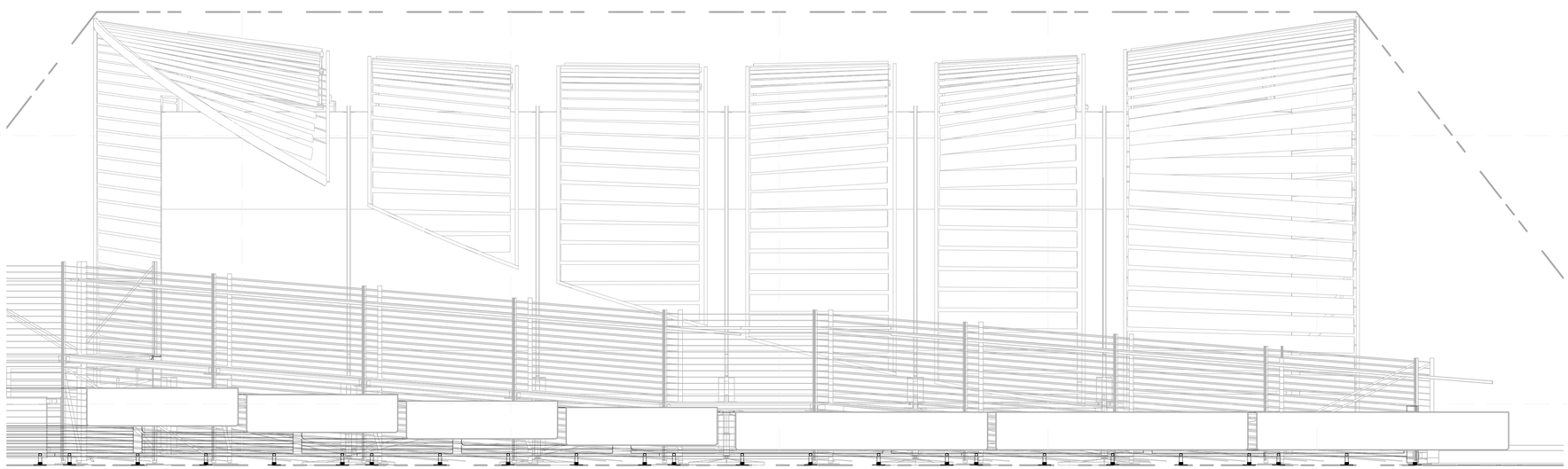

A1 LANDSCAPING SITE ELEVATION
3/8" = 1'-0"

0 2' 4' 6'

GENERAL SHEET NOTES

REFERENCE KEYNOTES

SHEET KEYNOTES

teamhawai'i

halepilihonua

TEAM NAME: UNIVERSITY OF HAWAII (TEAM HAWAII)

ADDRESS: UNIVERSITY OF HAWAI'I AT MĀNOA
2410 CAMPUS ROAD
HONOLULU, HI 96822

CONTACT: ROCKWOOD@ARCH.HAWAII.EDU
WWW.SOLAR.HAWAII.EDU

CONSULTANTS

ARCHITECTURE:

ENGINEERS:

LANDSCAPING:

CODE CONSULTANTS:

CLIENT

U.S. DEPARTMENT OF ENERGY

SOLAR DECATHLON 2011

WWW.SOLARDECATHLON.GOV

U.S. DEPARTMENT OF ENERGY SOLAR DECATHLON

MARK	DATE	DESCRIPTION

LOT NUMBER:	306
DRAWN BY:	UNIVERSITY OF HAWAI'I
CHECKED BY:	CHECKER
COPYRIGHT:	UNIVERSITY OF HAWAI'I SCHOOL OF ARCHITECTURE

SHEET TITLE

LANDSCAPE ELEVATIONS

L-201

5/8/2011 2:17:09 PM

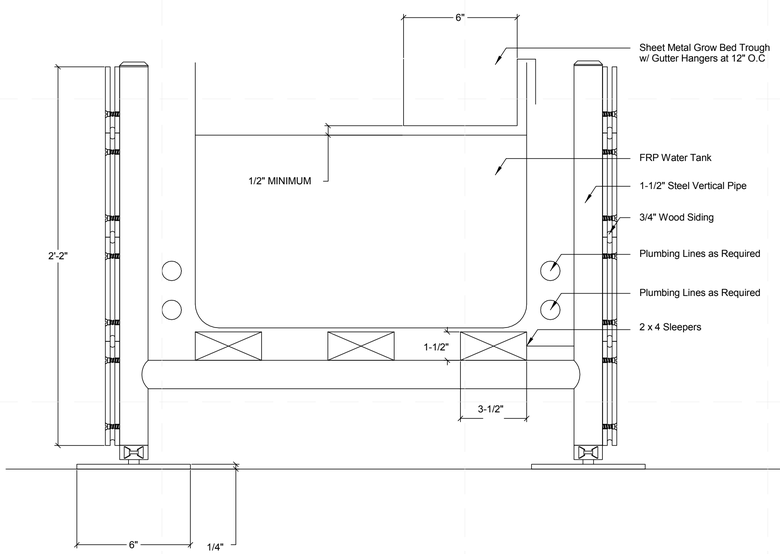

A1 LANDSCAPING DETAIL
3" = 1'-0"

0 3" 6" 1'

5/8/2011 2:17:14 PM

GENERAL SHEET NOTES

REFERENCE KEYNOTES

SHEET KEYNOTES

teamhawai'i
halepilihonua

TEAM NAME: UNIVERSITY OF HAWAII (TEAM HAWAII)
ADDRESS: UNIVERSITY OF HAWAI'I AT MĀNOA
2410 CAMPUS ROAD
HONOLULU, HI 96822
CONTACT: ROCKWOOD@ARCH.HAWAII.EDU
WWW.SOLAR.HAWAII.EDU

CONSULTANTS
ARCHITECTURE:
ENGINEERS:
LANDSCAPING:
CODE CONSULTANTS:

CLIENT
U.S. DEPARTMENT OF ENERGY
SOLAR DECATHLON 2011
WWW.SOLARDECATHLON.GOV

U.S. DEPARTMENT OF ENERGY SOLAR DECATHLON

MARK	DATE	DESCRIPTION

LOT NUMBER:	306
DRAWN BY:	UNIVERSITY OF HAWAI'I
CHECKED BY:	CHECKER
COPYRIGHT:	UNIVERSITY OF HAWAI'I SCHOOL OF ARCHITECTURE

SHEET TITLE
LANDSCAPING DETAILS

L-601

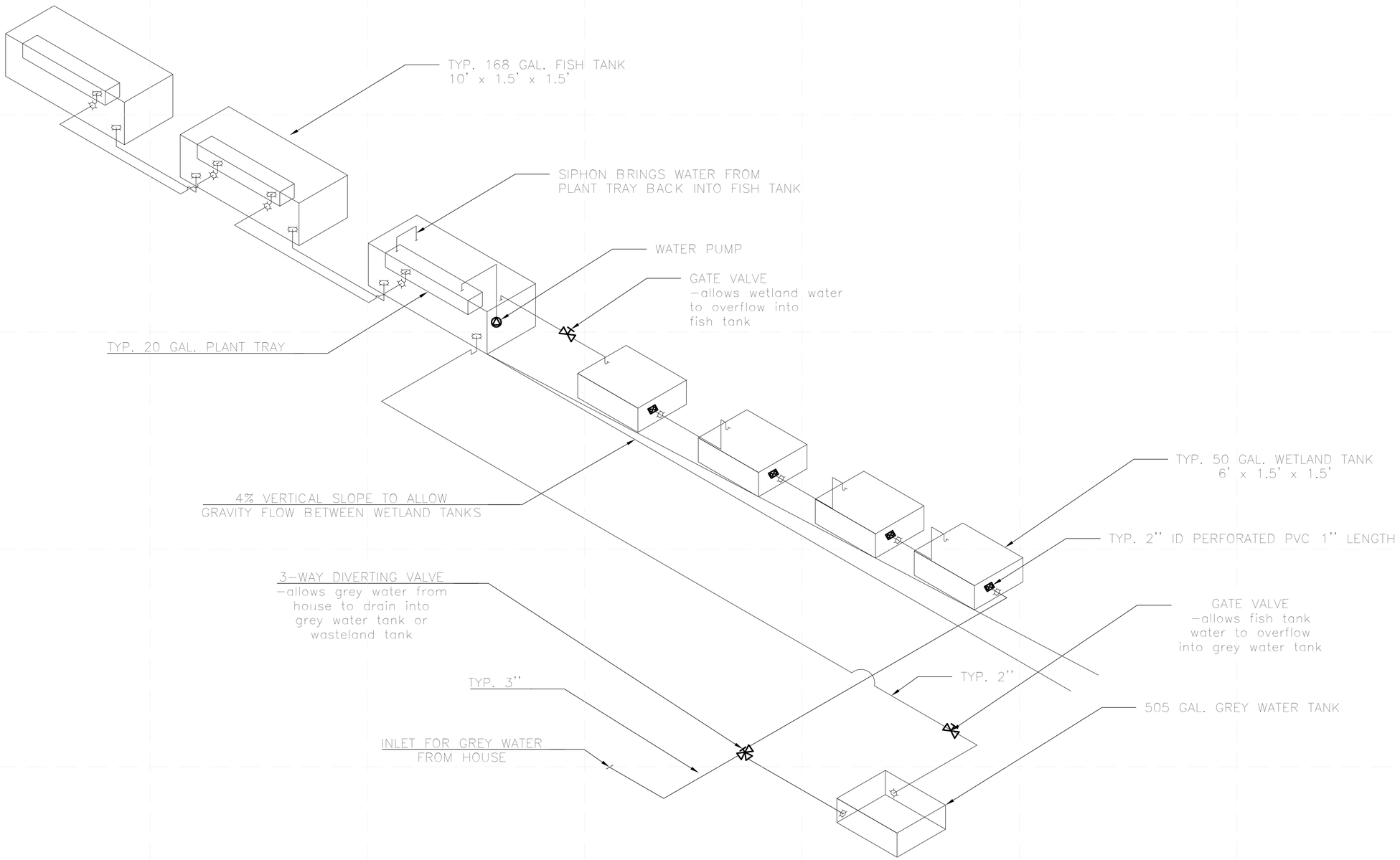

A1 LANDSCAPING PLUMBING DIAGRAM
NTS

teamhawai'i
halepilihonua

TEAM NAME:	UNIVERSITY OF HAWAII (TEAM HAWAII)
ADDRESS:	UNIVERSITY OF HAWAI'I AT MĀNOA 2410 CAMPUS ROAD HONOLULU, HI 96822
CONTACT:	ROCKWOOD@ARCH.HAWAII.EDU WWW.SOLAR.HAWAII.EDU

CONSULTANTS

ARCHITECTURE:	
ENGINEERS:	
LANDSCAPING:	
CODE CONSULTANTS:	

CLIENT
U.S. DEPARTMENT OF ENERGY
SOLAR DECATHLON 2011
WWW.SOLARDECATHLON.GOV
U.S. DEPARTMENT OF ENERGY SOLAR DECATHLON

MARK	DATE	DESCRIPTION

LOT NUMBER:	306
DRAWN BY:	UNIVERSITY OF HAWAI'I
CHECKED BY:	CHECKER
COPYRIGHT:	UNIVERSITY OF HAWAI'I SCHOOL OF ARCHITECTURE

SHEET TITLE
LANDSCAPING
PLUMBING DIAGRAM

L-602

5/9/2011 2:17:16 PM

GENERAL STRUCTURAL NOTES

DESIGN CRITERIA

1. STRUCTURAL DESIGN IS IN ACCORDANCE WITH THE 2009 INTERNATIONAL BUILDING CODE (IBC), AS MODIFIED BY THE SOLAR DECATHLON BUILDING CODE, DATED MARCH 26, 2010.

2. DEAD LOADS: BASED ON ACTUAL WEIGHT OF THE STRUCTURE, SOLAR PANELS AND EQUIPMENT.
   A. NO SINGLE PIECE OF EQUIPMENT SHALL EXCEED 13,000 LB. OPERATING WEIGHT.
   B. SOLAR PANELS, INCLUDING THEIR ALUMINUM FRAMES, SHALL NOT EXCEED 3 PSF UNIT WEIGHT.

3. LIVE LOADS:
   A. TYPICAL RESIDENTIAL FLOOR LIVE LOAD: 40 PSF
   B. LIVE LOAD ON APPROACH RAMP: 100 PSF
   C. LIVE LOAD ON ROOF: 20 PSF

4. WIND LOAD:
   A. DESIGN WIND SPEED: 60 MPH
   B. IMPORTANCE FACTOR (IW): 1.0
   C. EXPOSURE CATEGORY: C

5. SEISMIC LOAD: NOT CONSIDERED IN THE DESIGN FOR THIS INSTALLATION.

6. FOUNDATION DESIGN CRITERIA:
   A. ALLOWABLE SOIL BEARING: 1500 PSF
   B. COEFFICIENT OF FRICTION FOR SLIDING RESISTANCE: 0.25
   C. OVERTURNING FACTOR OF SAFETY: 2.0

STRUCTURAL PLYWOOD

1. MATERIAL SHALL CONFORM TO "SOFTWOOD PLYWOOD-CONSTRUCTION AND INDUSTRIAL," PRODUCT STANDARD PS 1- 83 OF U.S. DEPARTMENT OF COMMERCE, BUREAU OF STANDARDS.

2. FIRE TREATMENT PER THE FOLLOWING STANDARD: "PLYWOOD - FIRE RETARDANT TREATMENT BY PRESSURE PROCESS" (AWPA C27□74).

3. PLYWOOD SHALL BE MANUFACTURED IN ACCORDANCE WITH AMERICAN PLYWOOD ASSOCIATION STANDARDS WITH EACH SHEET GRADE MARKED.

4. ALL PLYWOOD SHALL HAVE A MINIMUM OF 5 PLIES.

5. PLYWOOD SHALL BE C-D STRUCTURAL I WITH EXTERIOR GLUE AND SHALL BE ½-INCH THICK MINIMUM. WHERE PLYWOOD THICKNESS IS BUILT UP FROM MULTIPLE SHEETS, ADJACENT SHEETS SHALL BE GLUED TOGETHER.

6. HOLES FOR BOLTS SHALL NOT BE MORE THAN 1/16-INCH LARGER THAN BOLT DIAMETER, UNLESS NOTED OTHERWISE.

STRUCTURAL STEEL WORK

1. STRUCTURAL STEEL SHAPES AND PLATES SHALL CONFORM TO ASTM A36. STEEL PIPE SECTIONS SHALL CONFORM TO ASTM A53 TYPE E OR S (WELDED OR SEAMLESS), GRADE B (FY = 35KSI) OR ASTM A501 (FY = 35KSI).

2. THREADED ROD SHALL CONFORM TO ASTM A36.

3. STRUCTURAL STEEL SHALL BE FABRICATED IN ACCORDANCE WITH AISC SPECIFICATIONS, AISC CODE OFSTANDARD PRACTICE, AND AWS D1.1.

4. BOLT HOLES SHALL BE DRILLED OR PUNCHED AT RIGHT ANGLES TO THE SURFACE OF THE METAL. BOLT HOLESSHALL NOT BE MORE THAN 1/16-INCH LARGER THAN BOLT DIAMETER, UNLESS NOTED OTHERWISE.

5. INTERIOR PRIMER PAINT:
   A. SSPC PAINT SPECIFICATION NO. 13; CONFORMING TO FEDERAL, STATE, AND LOCAL VOC REGULATORS; CONTAINING NO LEAD OR CHROMATES.
   B. AFTER FABRICATION, PREPARE STEEL SURFACES TO RECEIVE INTERIOR PRIMER IN ACCORDANCE WITH THE SSPC-SP3 "POWER TOOL CLEANING".
   C. APPLY INTERIOR PRIMER AT 2.0 MILS MINIMUM DRY FILM THICKNESS.

6. EXTERIOR PRIMER PAINT:
   A. SSPC PAINT SPECIFICATION NO. 20 ZINC-RICH PRIMER.
   B. AFTER FABRICATION, PREPARE STEEL SURFACES TO RECEIVE EXTERIOR PRIMER IN ACCORDANCE WITH THE SSPC-SP6 "COMMERCIAL BLAST CLEANING".
   C. APPLY EXTERIOR PRIMER AT 3.0 MILS MINIMUM DRY FILM THICKNESS.

7. ALL STEEL SURFACES SHALL BE CLEANED PER SSPC-SP1 "SOLVENT CLEANING" TO REMOVE OIL AND GREASE PRIOR TO ANY OTHER SURFACE PREPARATION. EASE ALLCORNERS OF PLATES AND SHAPES TO RECEIVE EXTERIOIPRIMER TO 1/16-INCH MINIMUM CHAMFER.

STRUCTURAL BOLTING

1. TYPICAL BOLTS SHALL CONFORM TO ASTM A307, GRADE A REGULAR LOW-CARBON STEEL BOLTS AND NUTS. PROVIDE HEXAGONAL HEAD BOLT HEADS AND SELF-LOCKING NUTS.

2. WHERE SPECIFIED IN DRAWINGS, ASTM A325 BOLTS SHALL BE USED. PROVIDE HEXAGONAL HEAD BOLT HEADS AND SELF- LOCKING NUTS.

3. BOLTS, NUTS AND WASHERS TO BE EXPOSED TO THE ELEMENTS IN THE FINAL STRUCTURE SHALL BE HOT-DIP GALVANIZED. GALVANIZE BOLTS, NUTS AND WASHERS IN ACCORDANCE WITH ASTM A153. TOUCH UP GALVANIZED SURFACES IN ACCORDANCE WITH ASTM A780.

4. BOLTS SHALL BE BROUGHT TO A SNUG TIGHT CONDITION.

5. BOLTS SHALL BE OF A LENGTH THAT WILL EXTEND ENTIRELY THROUGH BUT NOT MORE THAT ¼-INCH BEYONTHE NUT. WASHERS SHALL BE USED ON ALL BOLTS.

STRUCTURAL WELDING

1. ALL WELDING SHALL COMPLY WITH AISC SPECIFICATIONS AND AWS D1.1.

2. WELDING MATERIAL: FILLER METAL REQUIREMENTS SHALL CONFORM TO AWS D1.1 AND AISC "SPECIFICATION FOR STRUCTURAL STEEL BUILDINGS". MINIMUM CLASSIFIED TENSILE STRENGTH OF 70 KSI (E70). USE LOW HYDROGEN ELECTRODES AS DEFINED BY AWS D1.1.

STRUCTURAL CABLE

1. STRUCTURAL CABLE SHALL BE 7X19 CABLE CONFORMING TO AMERICAN STANDARD "MIL-W-1511A GALVANIZED AIRCRAFT CABLE."

2. CABLE END CONNECTIONS SHALL DEVELOP THE FULL BREAKING STRENGTH OF THE CABLE.

3. THIMBLES SHALL BE INSTALLED AT ALL 180-DEGREE BENDS. THE CABLE SHALL BE CLIPPED TO ITSELF IMMEDIATELY BEYOND THE THIMBLE.

4. WHERE CABLES ARE CLIPPED, THE DEAD END SHALL BE CLIPPED TO THE LIVE END BY AT LEAST TWO CLIPS, AND SHALL OVERLAP BY AT LEAST 4 ¾", OR AS REQUIRED BY THE CLIP MANUFACTURER.

5. CABLE END SPLICES SHALL USE AT LEAST FOUR CLIPS AND INCLUDE AN OVERLAP OF AT LEAST 9 ½", OR AS REQUIRED BY THE CLIP MANUFACTURER.

5/8/2011 5:28:41 PM

teamhawai'i
halepilihonua

TEAM NAME: UNIVERSITY OF HAWAII (TEAM HAWAII)
ADDRESS: UNIVERSITY OF HAWAI'I AT MĀNOA
2410 CAMPUS ROAD
HONOLULU, HI 96822
CONTACT: ROCKWOOD@ARCH.HAWAII.EDU
WWW.SOLAR.HAWAII.EDU

CONSULTANTS
ARCHITECTURE:
ENGINEERS:
LANDSCAPING:
CODE CONSULTANTS:

CLIENT
U.S. DEPARTMENT OF ENERGY
SOLAR DECATHLON 2011
WWW.SOLARDECATHLON.GOV

U.S. DEPARTMENT OF ENERGY SOLAR DECATHLON

MARK	DATE	DESCRIPTION

LOT NUMBER:	306
DRAWN BY:	UNIVERSITY OF HAWAI'I
CHECKED BY:	CHECKER
COPYRIGHT:	UNIVERSITY OF HAWAI'I SCHOOL OF ARCHITECTURE

SHEET TITLE

STRUCTURAL NOTES AND SYMBOLS

S-001

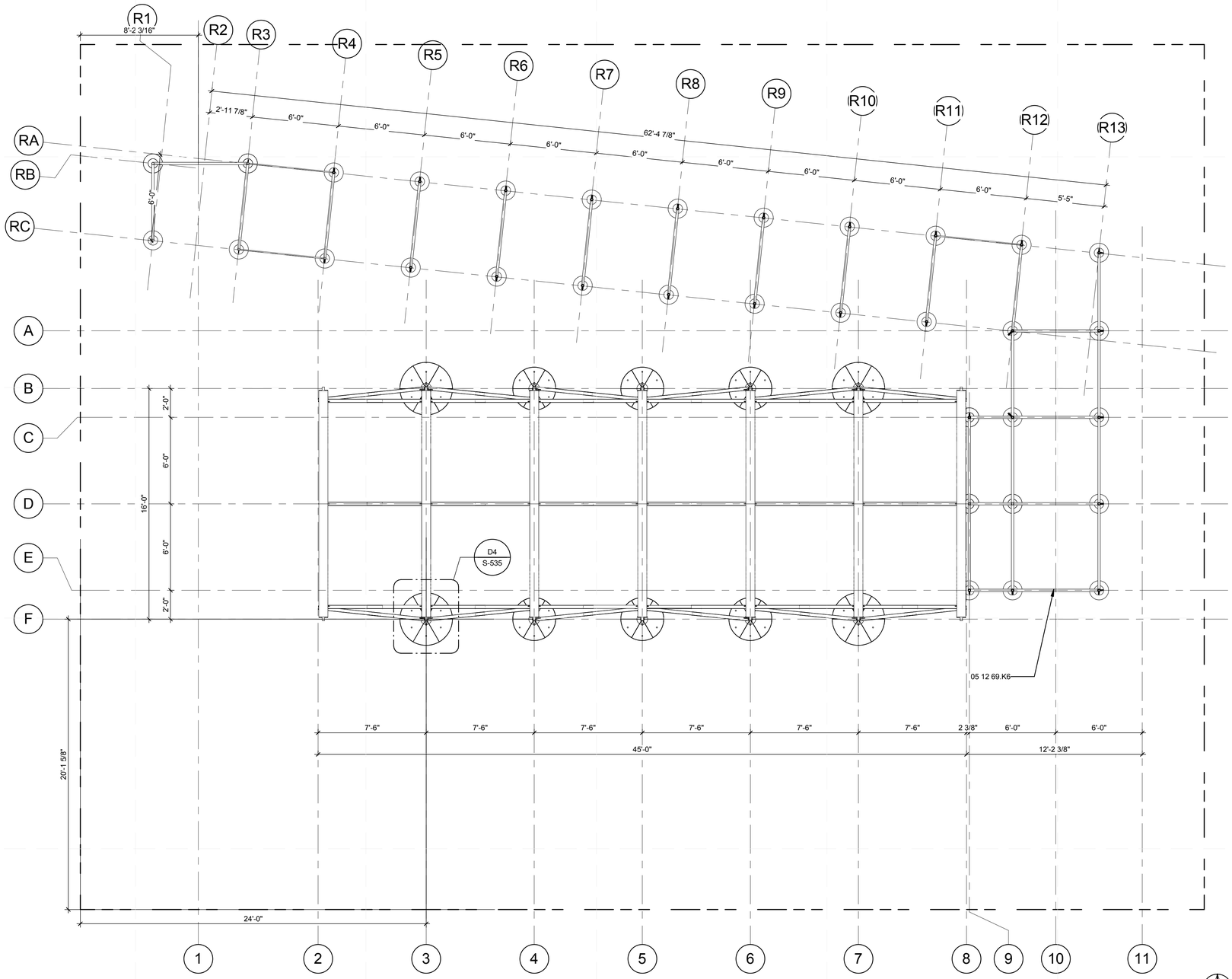

A1 FOUNDATION PLAN
1/4" = 1'-0"

0 2' 4' 8'

5/8/2011 5:28:52 PM

GENERAL SHEET NOTES

1. GENERAL SHEET NOTES
2. GENERAL SHEET NOTES 2
3. GENERAL SHEET NOTES 3
4. GENERAL SHEET NOTES 4
5. GENERAL SHEET NOTES 5FA FDAFDAFDASF D FDASDFSAFDASFDAS FA FAF
6. GENERAL SHEET NOTES 6
7. GENERAL SHEET NOTES 7
8. GENERAL SHEET NOTES 8

REFERENCE KEYNOTES

05 12 69.K6 P2

SHEET KEYNOTES

teamhawai'i
halepilihonua

TEAM NAME:	UNIVERSITY OF HAWAII (TEAM HAWAII)
ADDRESS:	UNIVERSITY OF HAWAI'I AT MĀNOA 2410 CAMPUS ROAD HONOLULU, HI 96822
CONTACT:	ROCKWOOD@ARCH.HAWAII.EDU WWW.SOLAR.HAWAII.EDU

CONSULTANTS

ARCHITECTURE:
ENGINEERS:
LANDSCAPING:
CODE CONSULTANTS:

CLIENT
U.S. DEPARTMENT OF ENERGY
SOLAR DECATHLON 2011
WWW.SOLARDECATHLON.GOV

U.S. DEPARTMENT OF ENERGY SOLAR DECATHLON

MARK	DATE	DESCRIPTION

LOT NUMBER:	306
DRAWN BY:	UNIVERSITY OF HAWAI'I
CHECKED BY:	Checker
COPYRIGHT:	UNIVERSITY OF HAWAI'I SCHOOL OF ARCHITECTURE

SHEET TITLE
FOUNDATION PLAN

S-100

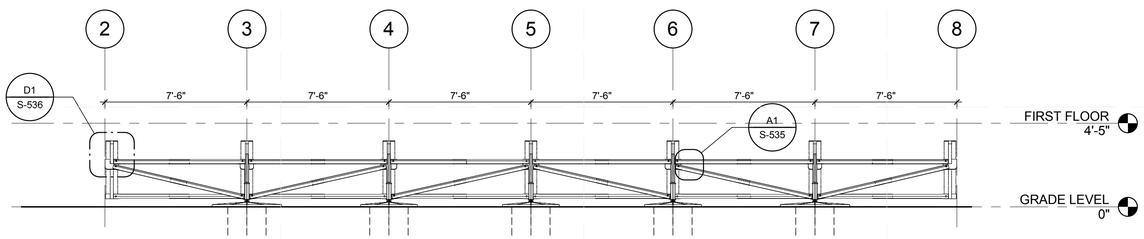

C1 FOUNDATION SOUTH ELEVATION
1/4" = 1'-0"
0 2' 4' 8'

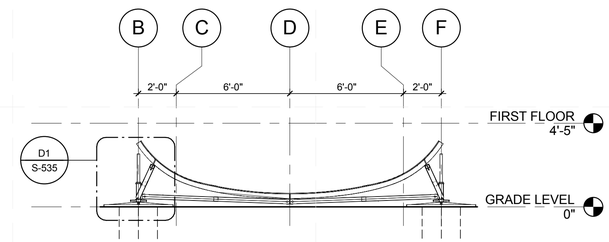

C5 FOUNDATION WEST ELEVATION
1/4" = 1'-0"
0 2' 4' 8'

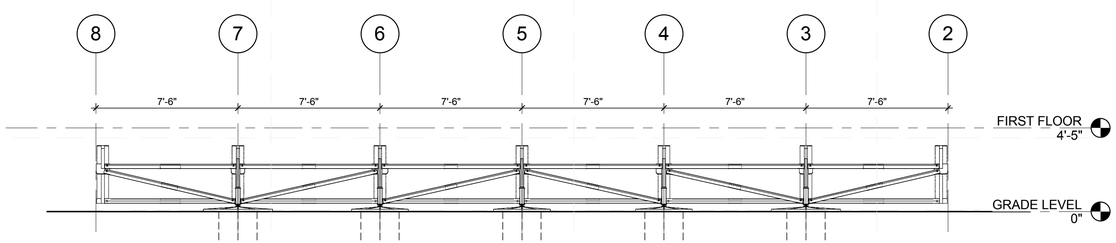

A1 FOUNDATION NORTH ELEVATION
1/4" = 1'-0"
0 2' 4' 8'

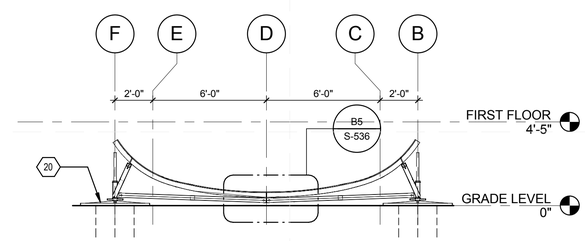

A5 FOUNDATION EAST ELEVATION
1/4" = 1'-0"
0 2' 4' 8'

GENERAL SHEET NOTES

REFERENCE KEYNOTES

SHEET KEYNOTES

20 DECK LEVELING PAD

teamhawai'i
halepilihonua

TEAM NAME: UNIVERSITY OF HAWAII (TEAM HAWAII)

ADDRESS: UNIVERSITY OF HAWAI'I AT MĀNOA
2410 CAMPUS ROAD
HONOLULU, HI 96822

CONTACT: ROCKWOOD@ARCH.HAWAII.EDU
WWW.SOLAR.HAWAII.EDU

CONSULTANTS

ARCHITECTURE:
ENGINEERS:
LANDSCAPING:
CODE CONSULTANTS:

CLIENT
U.S. DEPARTMENT OF ENERGY
SOLAR DECATHLON 2011
WWW.SOLARDECATHLON.GOV

U.S. DEPARTMENT OF ENERGY SOLAR DECATHLON

MARK	DATE	DESCRIPTION

LOT NUMBER:	306
DRAWN BY:	UNIVERSITY OF HAWAI'I
CHECKED BY:	CHECKER
COPYRIGHT:	UNIVERSITY OF HAWAI'I SCHOOL OF ARCHITECTURE

SHEET TITLE

FOUNDATION ELEVATION

S-101

5/6/2011 5:29:20 PM

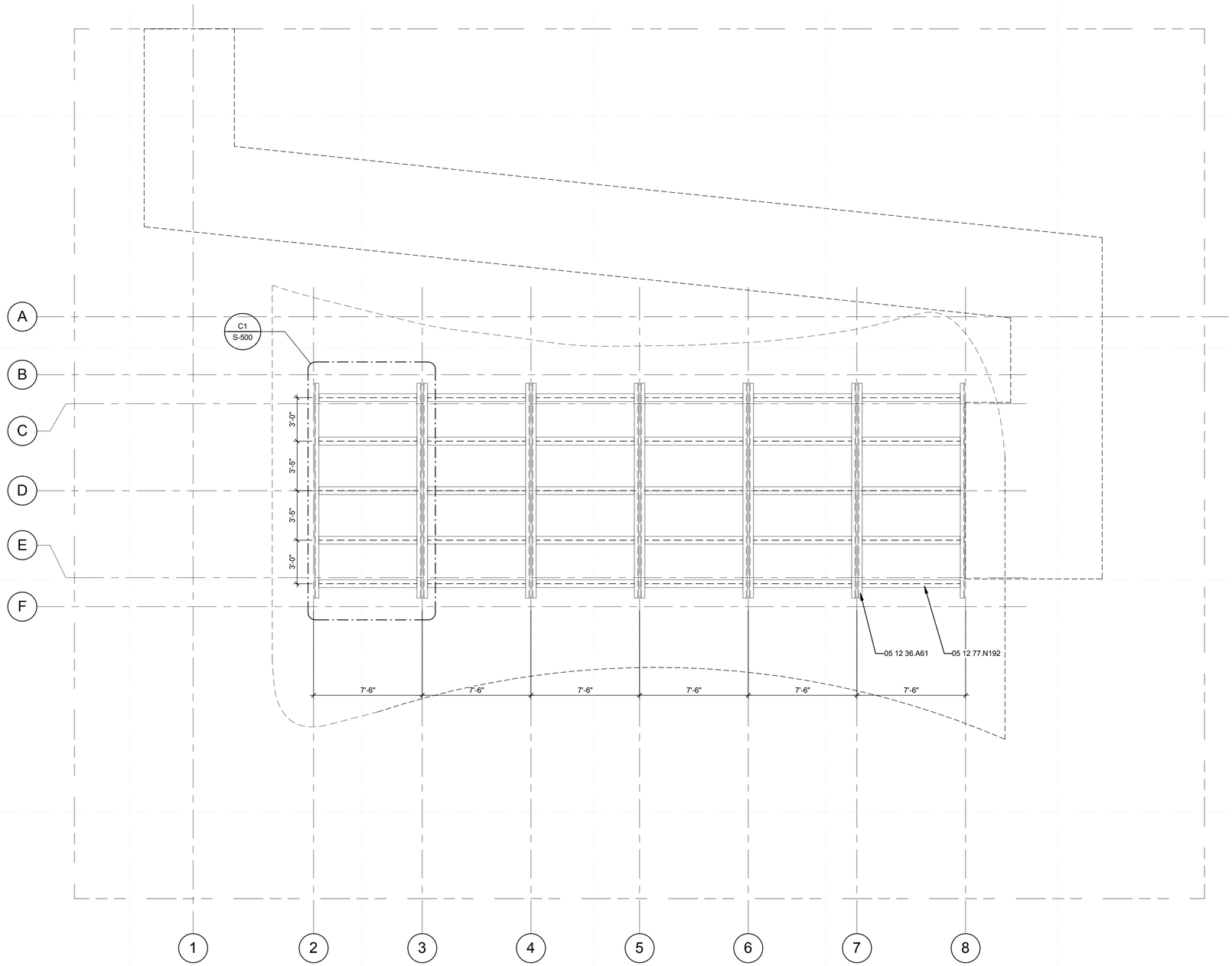

A1 FIRST FLOOR FRAMING PLAN
1/4" = 1'-0"

0 2' 4' 8'

5/8/2011 5:29:31 PM

GENERAL SHEET NOTES

REFERENCE KEYNOTES

05 12 36.A61	L5X3X0.5
05 12 36.A65	L5X3X0.25
05 12 36.A102	L3X3X0.375
05 12 36.A110	L3X2.5X0.25
05 12 39.B28	C3X5
05 12 77.N192	WT4X12
06 16 00.D7	1/2" EXTERIOR GRADE PLYWOOD
06 17 23	PARALLEL STRAND LUMBER
07 91 16	JOINT GASKETS

SHEET KEYNOTES

21	TWO LAYERS OF 1/2" STRUCTURAL 1 GRADE PLYWOOD, MINIMUM 5 LAYERS

teamhawai'i

halepilihonua

TEAM NAME: UNIVERSITY OF HAWAII (TEAM HAWAII)

ADDRESS: UNIVERSITY OF HAWAI'I AT MĀNOA
2410 CAMPUS ROAD
HONOLULU, HI 96822

CONTACT: ROCKWOOD@ARCH.HAWAII.EDU
WWW.SOLAR.HAWAII.EDU

CONSULTANTS

ARCHITECTURE:

ENGINEERS:

LANDSCAPING:

CODE CONSULTANTS:

CLIENT

U.S. DEPARTMENT OF ENERGY

SOLAR DECATHLON 2011

WWW.SOLARDECATHLON.GOV

U.S. DEPARTMENT OF ENERGY SOLAR DECATHLON

MARK	DATE	DESCRIPTION

LOT NUMBER:	306
DRAWN BY:	UNIVERSITY OF HAWAI'I
CHECKED BY:	CHECKER
COPYRIGHT:	UNIVERSITY OF HAWAI'I SCHOOL OF ARCHITECTURE

SHEET TITLE

FIRST FLOOR FRAMING PLAN

S-102

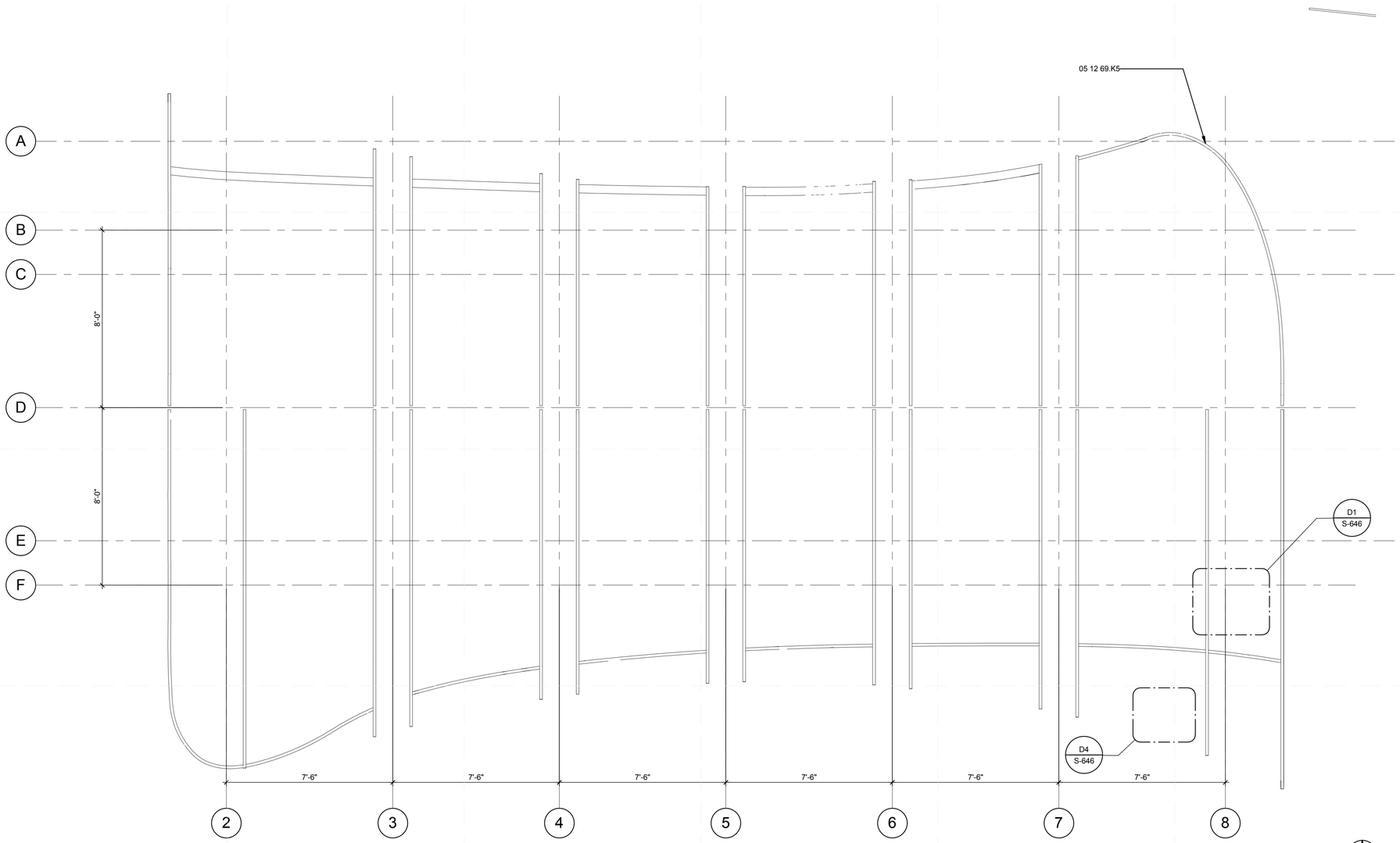

A1 ROOF FRAMING PLAN
3/8" = 1'-0"

5/8/2011 5:29:38 PM

GENERAL SHEET NOTES

REFERENCE KEYNOTES

05 12 69.K5 P1.5

SHEET KEYNOTES

teamhawai'i

halepilihonua

TEAM NAME: UNIVERSITY OF HAWAII (TEAM HAWAII)

ADDRESS: UNIVERSITY OF HAWAI'I AT MĀNOA
2410 CAMPUS ROAD
HONOLULU, HI 96822

CONTACT: ROCKWOOD@ARCH.HAWAII.EDU
WWW.SOLAR.HAWAII.EDU

CONSULTANTS

ARCHITECTURE:

ENGINEERS:

LANDSCAPING:

CODE CONSULTANTS:

CLIENT

U.S. DEPARTMENT OF ENERGY

SOLAR DECATHLON 2011

WWW.SOLARDECATHLON.GOV

U.S. DEPARTMENT OF ENERGY SOLAR DECATHLON

MARK	DATE	DESCRIPTION

LOT NUMBER: 306

DRAWN BY: UNIVERSITY OF HAWAI'I

CHECKED BY: CHECKER

COPYRIGHT: UNIVERSITY OF HAWAI'I
SCHOOL OF ARCHITECTURE

SHEET TITLE

ROOF FRAMING PLAN

S-103

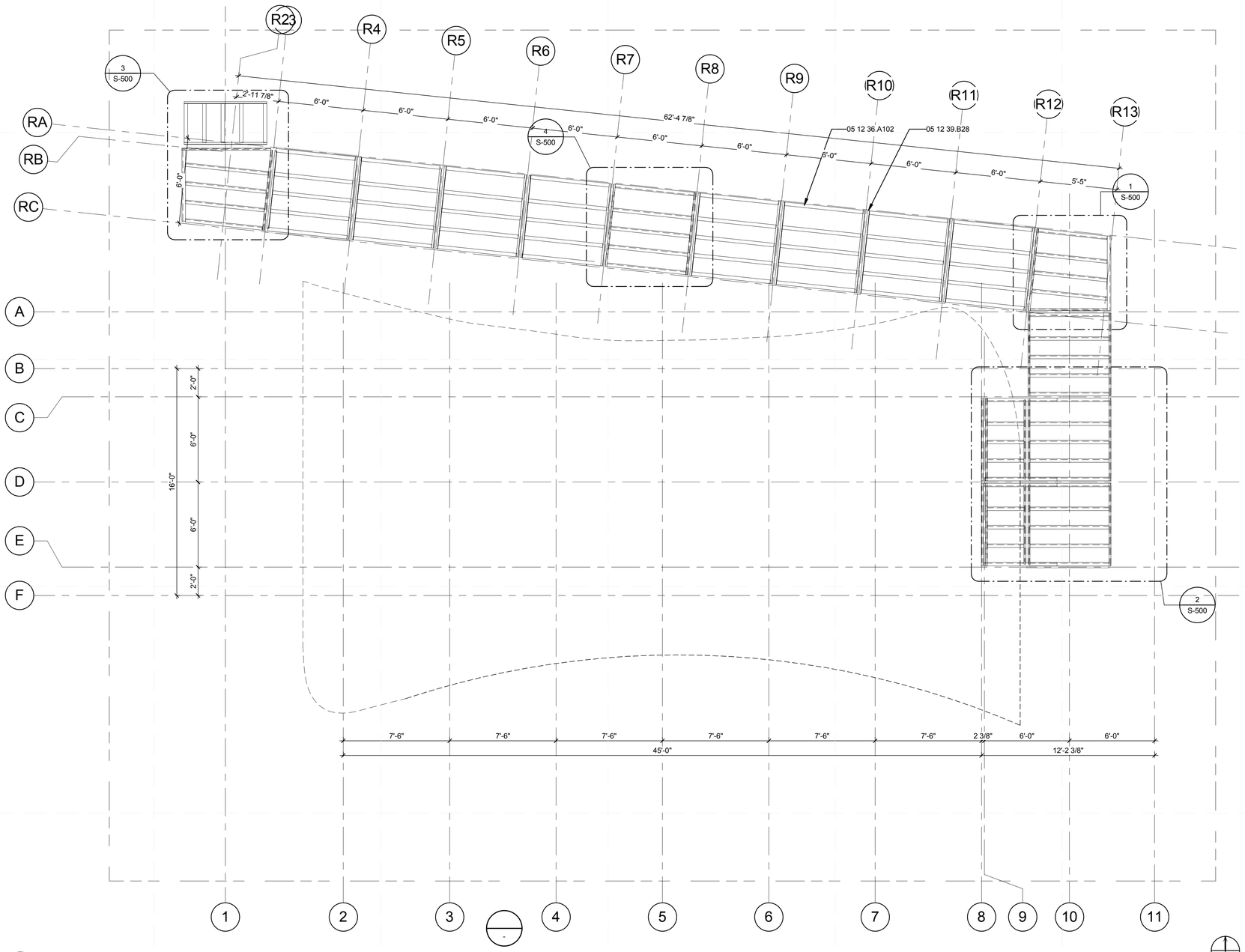

A1 RAMP DECK FRAMING PLAN

1/4" = 1'-0"

GENERAL SHEET NOTES

REFERENCE KEYNOTES

05 12 36.A65	L5X3X0.25
05 12 36.A102	L3X3X0.375
05 12 39.B28	C3X5
05 12 77.N192	WT4X12
06 17 23	PARALLEL STRAND LUMBER

SHEET KEYNOTES

teamhawai'i

halepilihonua

TEAM NAME:	UNIVERSITY OF HAWAII (TEAM HAWAII)
ADDRESS:	UNIVERSITY OF HAWAI'I AT MĀNOA 2410 CAMPUS ROAD HONOLULU, HI 96822
CONTACT:	ROCKWOOD@ARCH.HAWAII.EDU WWW.SOLAR.HAWAII.EDU

CONSULTANTS

ARCHITECTURE:

ENGINEERS:

LANDSCAPING:

CODE CONSULTANTS:

CLIENT

U.S. DEPARTMENT OF ENERGY

SOLAR DECATHLON 2011

WWW.SOLARDECATHLON.GOV

U.S. DEPARTMENT OF ENERGY SOLAR DECATHLON

MARK	DATE	DESCRIPTION

LOT NUMBER:	306
DRAWN BY:	UNIVERSITY OF HAWAI'I
CHECKED BY:	CHECKER
COPYRIGHT:	UNIVERSITY OF HAWAI'I SCHOOL OF ARCHITECTURE

SHEET TITLE

DECK FRAMING PLAN

S-104

5/6/2011 5:29:43 PM

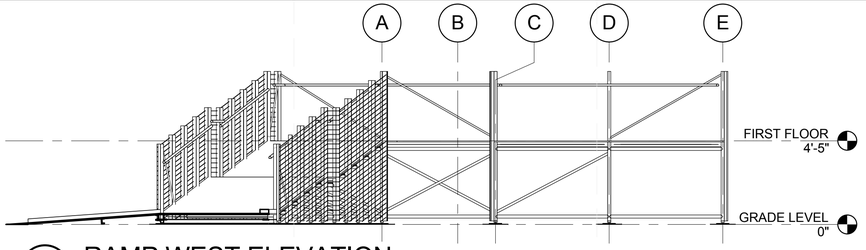

3 RAMP WEST ELEVATION
1/4" = 1'-0"

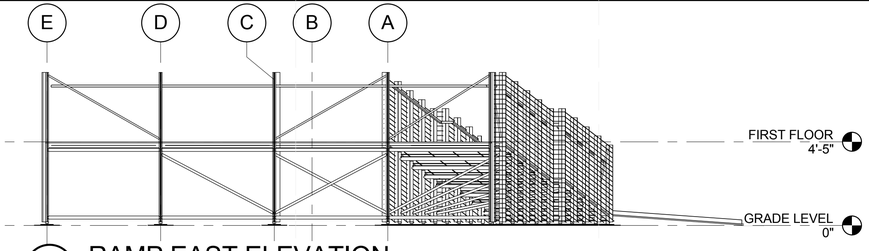

4 RAMP EAST ELEVATION
1/4" = 1'-0"

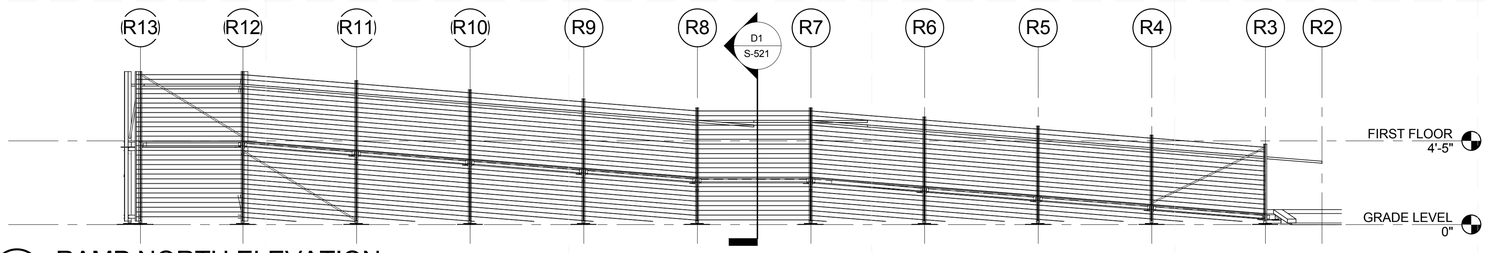

1 RAMP NORTH ELEVATION
1/4" = 1'-0"

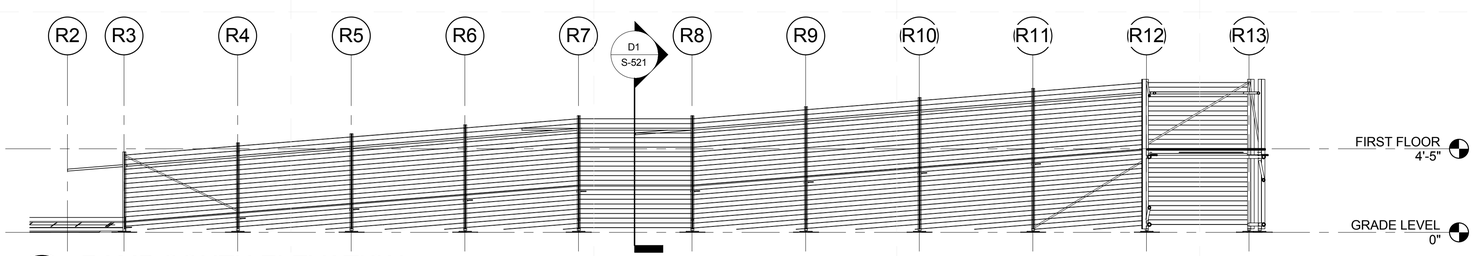

2 RAMP SOUTH ELEVATION
1/4" = 1'-0"

GENERAL SHEET NOTES

REFERENCE KEYNOTES

SHEET KEYNOTES

teamhawai'i
halepilihonua

TEAM NAME:	UNIVERSITY OF HAWAII (TEAM HAWAII)
ADDRESS:	UNIVERSITY OF HAWAI'I AT MĀNOA 2410 CAMPUS ROAD HONOLULU, HI 96822
CONTACT:	ROCKWOOD@ARCH.HAWAII.EDU WWW.SOLAR.HAWAII.EDU

CONSULTANTS

ARCHITECTURE:

ENGINEERS:

LANDSCAPING:

CODE CONSULTANTS:

CLIENT

U.S. DEPARTMENT OF ENERGY

SOLAR DECATHLON 2011

WWW.SOLARDECATHLON.GOV

U.S. DEPARTMENT OF ENERGY
SOLAR DECATHLON

MARK	DATE	DESCRIPTION

LOT NUMBER:	306
DRAWN BY:	UNIVERSITY OF HAWAI'I
CHECKED BY:	Checker
COPYRIGHT:	UNIVERSITY OF HAWAI'I SCHOOL OF ARCHITECTURE

SHEET TITLE

RAMP DECK ELEVATIONS

S-105

5/6/2011 5:29:55 PM

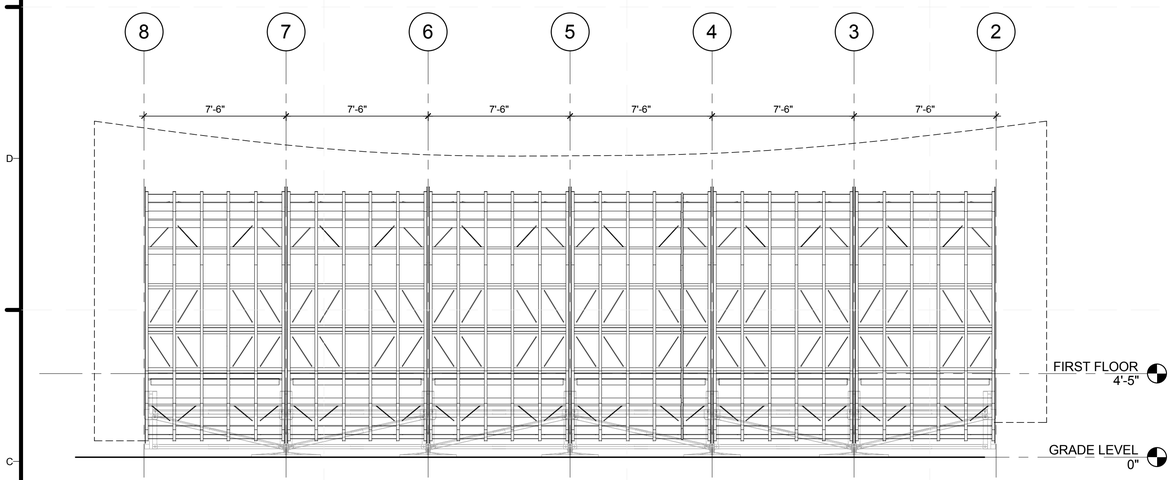

C1 FRAMING NORTH ELEVATION
1/4" = 1'-0"

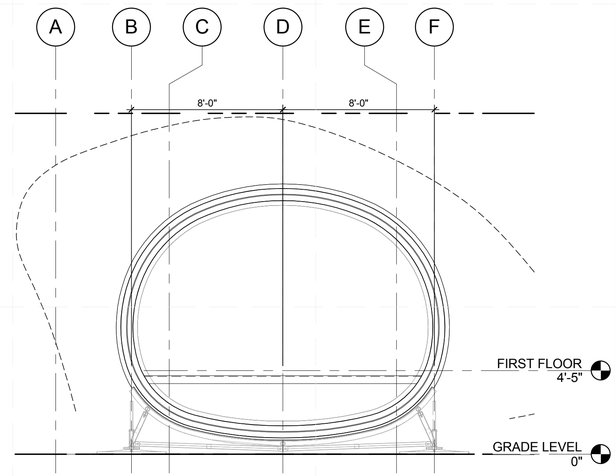

C5 FRAMING WEST ELEVATION
1/4" = 1'-0"

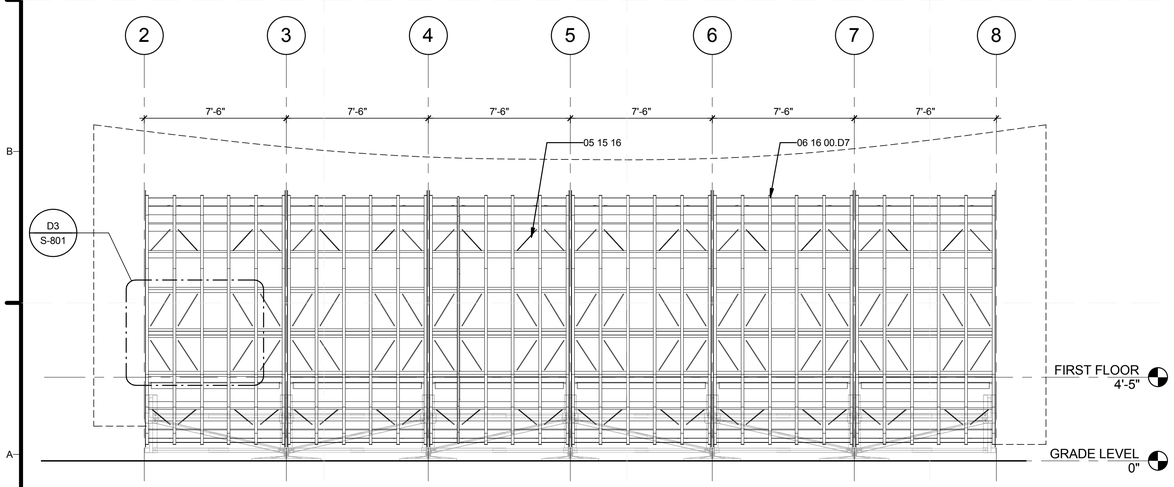

A1 FRAMING SOUTH ELEVATION
1/4" = 1'-0"

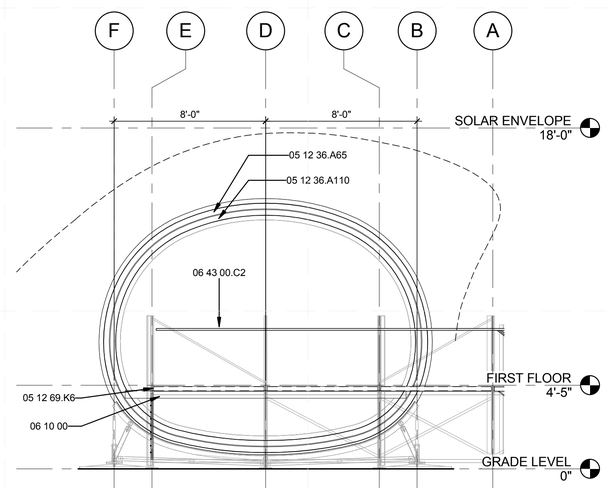

A5 FRAMING EAST ELEVATION
1/4" = 1'-0"

GENERAL SHEET NOTES

REFERENCE KEYNOTES

05 12 36.A65	L5X3X0.25
05 12 36.A110	L3X2.5X0.25
05 12 69.K6	P2
05 15 16	STEEL WIRE ROPE ASSEMBLIES
06 10 00	ROUGH CARPENTRY
06 16 00.D7	1/2" EXTERIOR GRADE PLYWOOD
06 43 00.C2	1 1/2" ROUND RAIL

SHEET KEYNOTES

teamhawai'i
halepilihonua

TEAM NAME: UNIVERSITY OF HAWAII (TEAM HAWAII)
ADDRESS: UNIVERSITY OF HAWAI'I AT MĀNOA
2410 CAMPUS ROAD
HONOLULU, HI 96822
CONTACT: ROCKWOOD@ARCH.HAWAII.EDU
WWW.SOLAR.HAWAII.EDU

CONSULTANTS
ARCHITECTURE:
ENGINEERS:
LANDSCAPING:
CODE CONSULTANTS:

CLIENT
U.S. DEPARTMENT OF ENERGY
SOLAR DECATHLON 2011
WWW.SOLARDECATHLON.GOV

U.S. DEPARTMENT OF ENERGY
SOLAR DECATHLON

MARK	DATE	DESCRIPTION

LOT NUMBER:	306
DRAWN BY:	UNIVERSITY OF HAWAI'I
CHECKED BY:	CHECKER
COPYRIGHT:	UNIVERSITY OF HAWAI'I SCHOOL OF ARCHITECTURE

SHEET TITLE
FRAMING ELEVATIONS

S-201

5/8/2011 5:30:34 PM

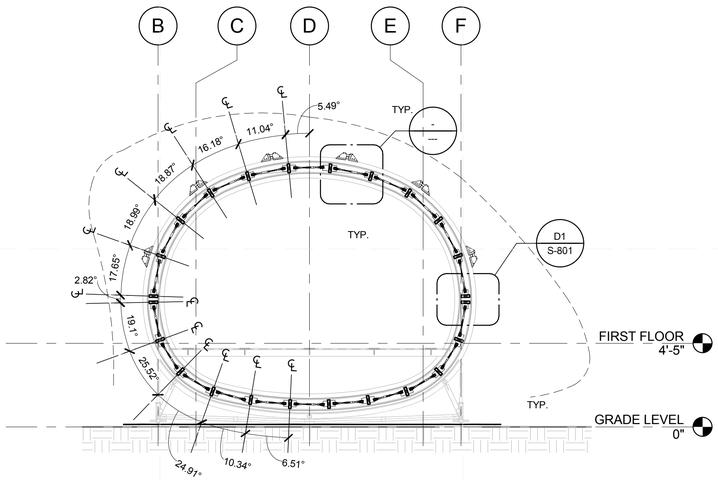

D1 FRAMING TRANSVERSE SECTION 1

1/4" = 1'-0"

0 2' 4' 8'

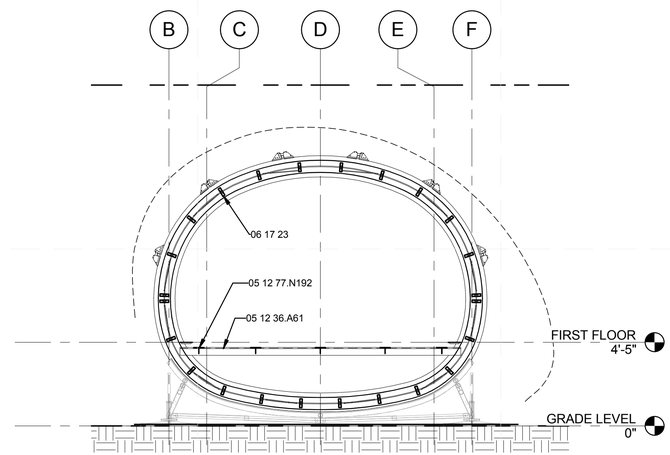

D4 FRAMING TRANSVERSE SECTION 2

1/4" = 1'-0"

0 2' 4' 8'

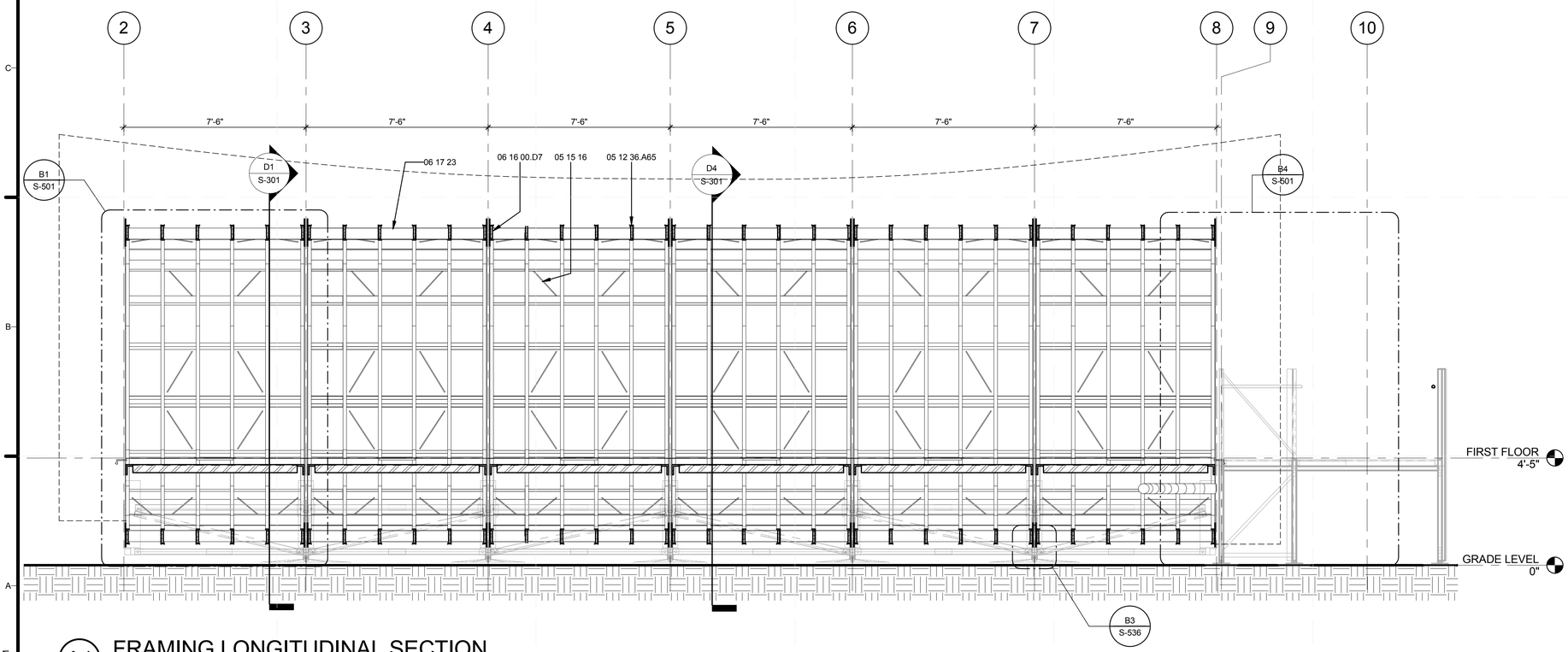

A1 FRAMING LONGITUDINAL SECTION

3/8" = 1'-0"

0 2' 4' 6'

GENERAL SHEET NOTES

REFERENCE KEYNOTES

05 12 36.A61	L5X3X0.5
05 12 36.A65	L5X3X0.25
05 12 77.N192	WT4X12
05 15 16	STEEL WIRE ROPE ASSEMBLIES
06 16 00.D7	1/2" EXTERIOR GRADE PLYWOOD
06 17 23	PARALLEL STRAND LUMBER

SHEET KEYNOTES

teamhawai'i

halepilihonua

TEAM NAME: UNIVERSITY OF HAWAII (TEAM HAWAII)

ADDRESS: UNIVERSITY OF HAWAI'I AT MĀNOA
2410 CAMPUS ROAD
HONOLULU, HI 96822

CONTACT: ROCKWOOD@ARCH.HAWAII.EDU
WWW.SOLAR.HAWAII.EDU

CONSULTANTS

ARCHITECTURE:

ENGINEERS:

LANDSCAPING:

CODE CONSULTANTS:

CLIENT

U.S. DEPARTMENT OF ENERGY

SOLAR DECATHLON 2011

WWW.SOLARDECATHLON.GOV

U.S. DEPARTMENT OF ENERGY SOLAR DECATHLON

MARK	DATE	DESCRIPTION

LOT NUMBER:	306
DRAWN BY:	UNIVERSITY OF HAWAI'I
CHECKED BY:	CHECKER
COPYRIGHT:	UNIVERSITY OF HAWAI'I SCHOOL OF ARCHITECTURE

SHEET TITLE

FRAMING SECTIONS

S-301

5/6/2011 5:30:57 PM

GENERAL SHEET NOTES

1. GENERAL SHEET NOTES
2. GENERAL SHEET NOTES 2
3. GENERAL SHEET NOTES 3
4. GENERAL SHEET NOTES 4
5. GENERAL SHEET NOTES 5FA FDAFDAFDASF D FDASDFSAFDASFDAS FA FAF
6. GENERAL SHEET NOTES 6
7. GENERAL SHEET NOTES 7
8. GENERAL SHEET NOTES 8

REFERENCE KEYNOTES

SHEET KEYNOTES

teamhawai'i

halepilihonua

TEAM NAME: UNIVERSITY OF HAWAII (TEAM HAWAII)

ADDRESS: UNIVERSITY OF HAWAI'I AT MĀNOA
2410 CAMPUS ROAD
HONOLULU, HI 96822

CONTACT: ROCKWOOD@ARCH.HAWAII.EDU
WWW.SOLAR.HAWAII.EDU

CONSULTANTS

ARCHITECTURE:

ENGINEERS:

LANDSCAPING:

CODE CONSULTANTS:

CLIENT

U.S. DEPARTMENT OF ENERGY

SOLAR DECATHLON 2011

WWW.SOLARDECATHLON.GOV

U.S. DEPARTMENT OF ENERGY SOLAR DECATHLON

MARK	DATE	DESCRIPTION

LOT NUMBER:	306
DRAWN BY:	UNIVERSITY OF HAWAI'I
CHECKED BY:	CHECKER
COPYRIGHT:	UNIVERSITY OF HAWAI'I SCHOOL OF ARCHITECTURE

SHEET TITLE

FRAMING SECTIONS

S-302

5/8/2011 5:31:02 PM

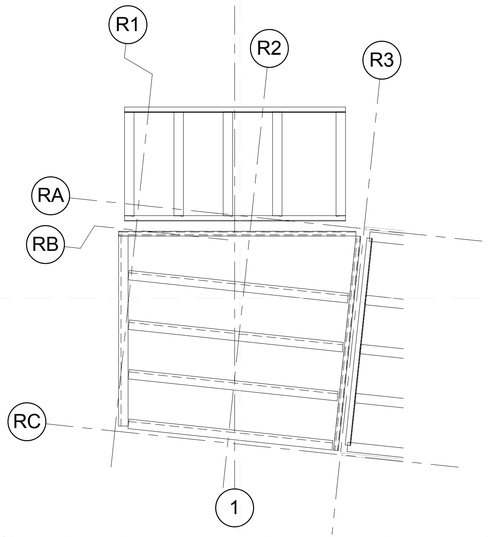

3 BOTTOM LANDING FRAMING PLAN
1/2" = 1'-0"

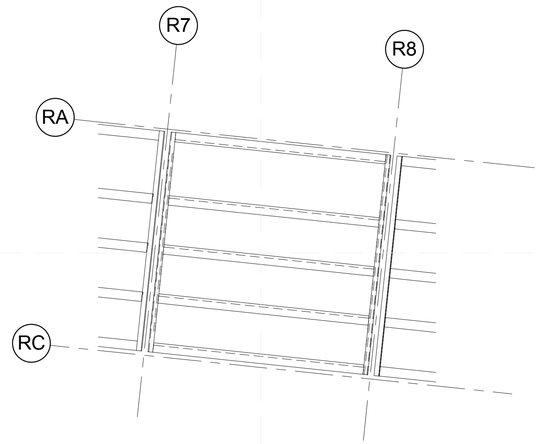

4 MID LANDING FRAMING PLAN
1/2" = 1'-0"

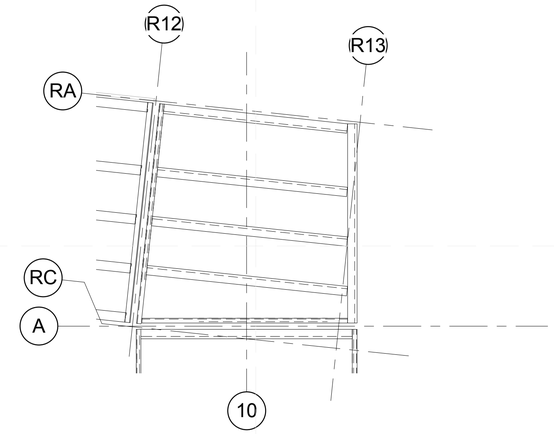

1 TOP LANDING FRAMING PLAN
1/2" = 1'-0"

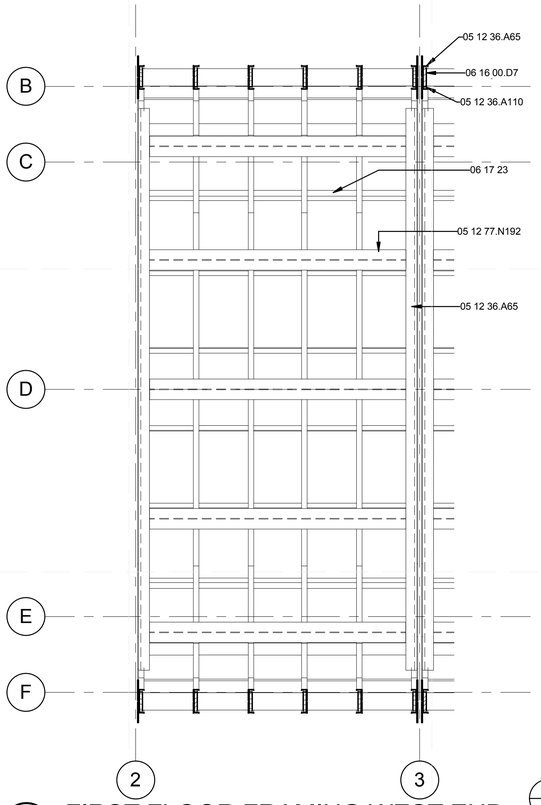

C1 FIRST FLOOR FRAMING WEST END
1/2" = 1'-0"

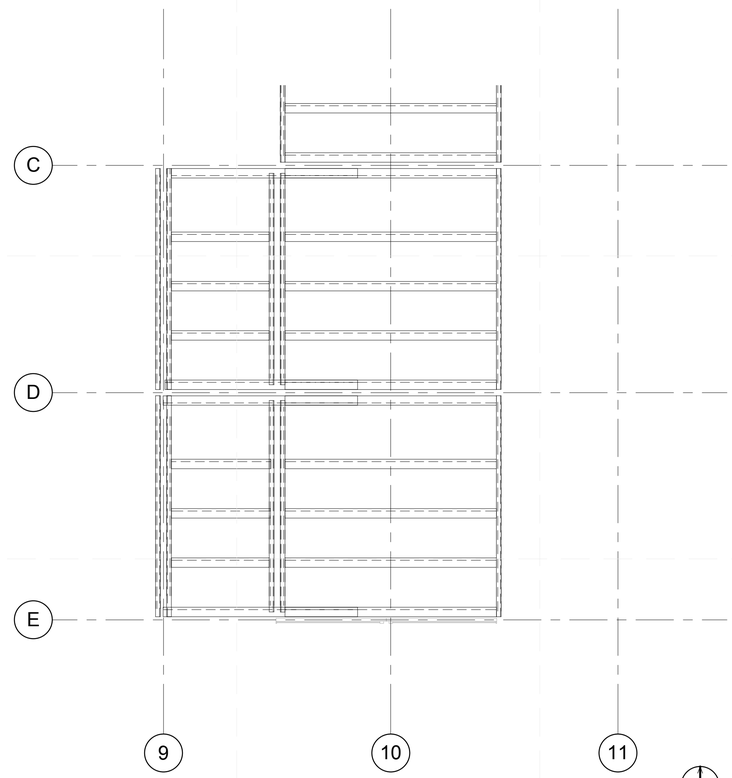

2 DECK FRAMING PLAN
1/2" = 1'-0"

GENERAL SHEET NOTES

REFERENCE KEYNOTES

05 12 36.A65	L5X3X0.25
05 12 36.A110	L3X2.5X0.25
05 12 77.N192	WT4X12
06 16 00.D7	1/2" EXTERIOR GRADE PLYWOOD
06 17 23	PARALLEL STRAND LUMBER

SHEET KEYNOTES

teamhawai'i
halepilihonua

TEAM NAME: UNIVERSITY OF HAWAII (TEAM HAWAII)
ADDRESS: UNIVERSITY OF HAWAI'I AT MĀNOA
2410 CAMPUS ROAD
HONOLULU, HI 96822
CONTACT: ROCKWOOD@ARCH.HAWAII.EDU
WWW.SOLAR.HAWAII.EDU

CONSULTANTS
ARCHITECTURE:
ENGINEERS:
LANDSCAPING:
CODE CONSULTANTS:

CLIENT
U.S. DEPARTMENT OF ENERGY
SOLAR DECATHLON 2011
WWW.SOLARDECATHLON.GOV

U.S. DEPARTMENT OF ENERGY
SOLAR DECATHLON

MARK	DATE	DESCRIPTION

LOT NUMBER: 306
DRAWN BY: UNIVERSITY OF HAWAI'I
CHECKED BY: Checker
COPYRIGHT: UNIVERSITY OF HAWAI'I
SCHOOL OF ARCHITECTURE

SHEET TITLE
ENLARGE
STRUCTURAL PLAN

S-500

5/6/2011 5:31:12 PM

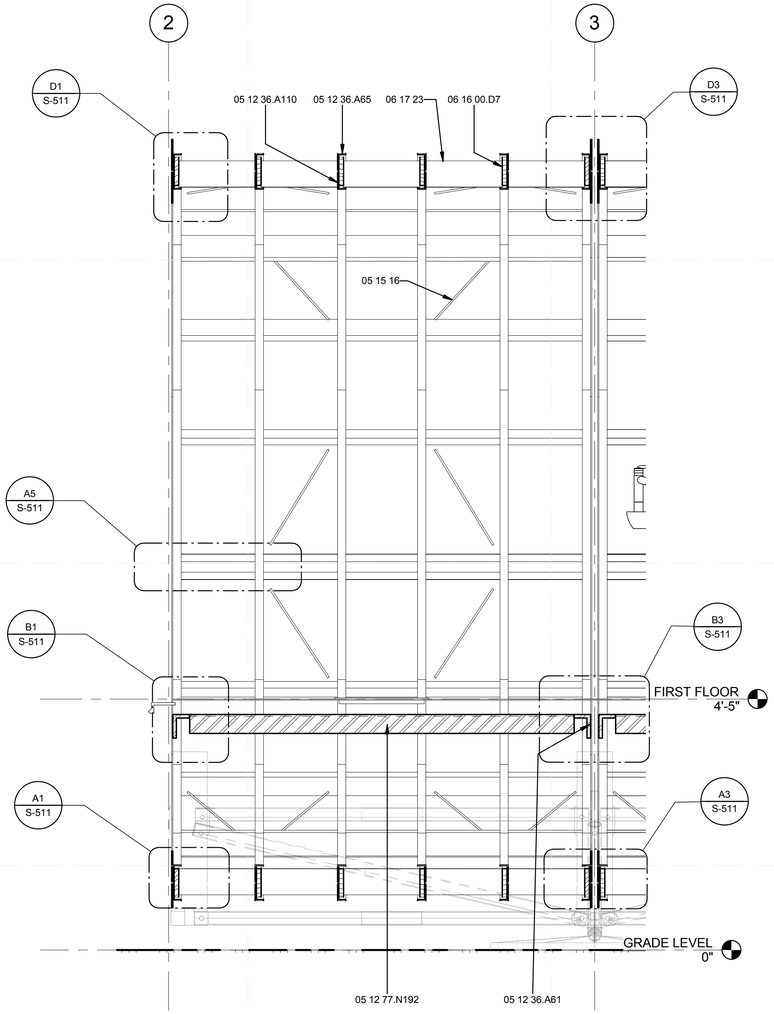

B1 WEST END MODULE SECTION
3/4" = 1'-0"

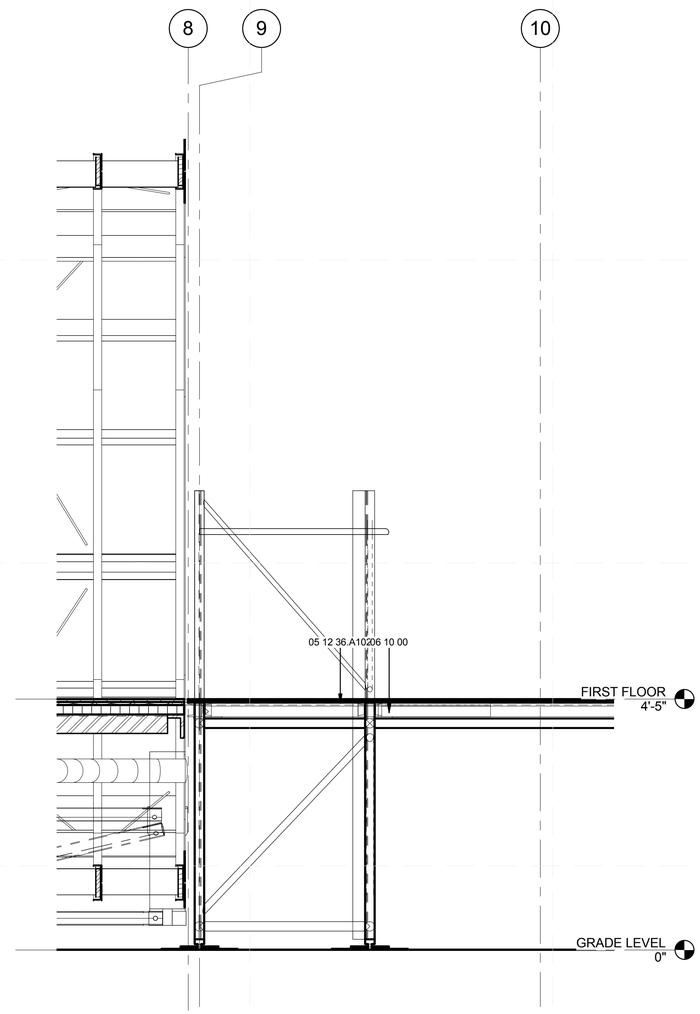

B4 EAST END MODULE CONNECTION TO RAMP
3/4" = 1'-0"

GENERAL SHEET NOTES

REFERENCE KEYNOTES

05 12 36.A61	L5X3X0.5
05 12 36.A65	L5X3X0.25
05 12 36.A102	L3X3X0.375
05 12 36.A110	L3X2.5X0.25
05 12 77.N192	WT4X12
05 15 16	STEEL WIRE ROPE ASSEMBLIES
06 10 00	ROUGH CARPENTRY
06 16 00.D7	1/2" EXTERIOR GRADE PLYWOOD
06 17 23	PARALLEL STRAND LUMBER

SHEET KEYNOTES

teamhawai'i
halepilihonua

TEAM NAME: UNIVERSITY OF HAWAII (TEAM HAWAII)
ADDRESS: UNIVERSITY OF HAWAI'I AT MĀNOA
2410 CAMPUS ROAD
HONOLULU, HI 96822
CONTACT: ROCKWOOD@ARCH.HAWAII.EDU
WWW.SOLAR.HAWAII.EDU

CONSULTANTS
ARCHITECTURE:
ENGINEERS:
LANDSCAPING:
CODE CONSULTANTS:

CLIENT
U.S. DEPARTMENT OF ENERGY
SOLAR DECATHLON 2011
WWW.SOLARDECATHLON.GOV
U.S. DEPARTMENT OF ENERGY SOLAR DECATHLON

MARK	DATE	DESCRIPTION

LOT NUMBER:	306
DRAWN BY:	UNIVERSITY OF HAWAI'I
CHECKED BY:	CHECKER
COPYRIGHT:	UNIVERSITY OF HAWAI'I SCHOOL OF ARCHITECTURE

SHEET TITLE
ENLARGE STRUCTURAL SECTION

S-501

5/8/2011 5:31:26 PM

GENERAL SHEET NOTES

1. GENERAL SHEET NOTES
2. GENERAL SHEET NOTES 2
3. GENERAL SHEET NOTES 3
4. GENERAL SHEET NOTES 4
5. GENERAL SHEET NOTES 5FA FDAFDAFDASF D FDASDFSAFDASFDAS FA FAF
6. GENERAL SHEET NOTES 6
7. GENERAL SHEET NOTES 7
8. GENERAL SHEET NOTES 8

REFERENCE KEYNOTES

SHEET KEYNOTES

teamhawai'i

halepilihonua

TEAM NAME: UNIVERSITY OF HAWAII (TEAM HAWAII)

ADDRESS: UNIVERSITY OF HAWAI'I AT MĀNOA
2410 CAMPUS ROAD
HONOLULU, HI 96822

CONTACT: ROCKWOOD@ARCH.HAWAII.EDU
WWW.SOLAR.HAWAII.EDU

CONSULTANTS

ARCHITECTURE:

ENGINEERS:

LANDSCAPING:

CODE CONSULTANTS:

CLIENT

U.S. DEPARTMENT OF ENERGY

SOLAR DECATHLON 2011

WWW.SOLARDECATHLON.GOV

U.S. DEPARTMENT OF ENERGY SOLAR DECATHLON

MARK	DATE	DESCRIPTION

LOT NUMBER:	306
DRAWN BY:	UNIVERSITY OF HAWAI'I
CHECKED BY:	Checker
COPYRIGHT:	UNIVERSITY OF HAWAI'I SCHOOL OF ARCHITECTURE

SHEET TITLE

PLAN DETAILS

S-502

5/6/2011 5:31:30 PM

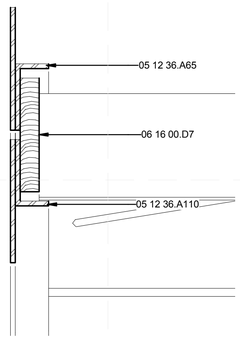

D1 WEST END ROOF FRAMING DETAIL
3" = 1'-0"

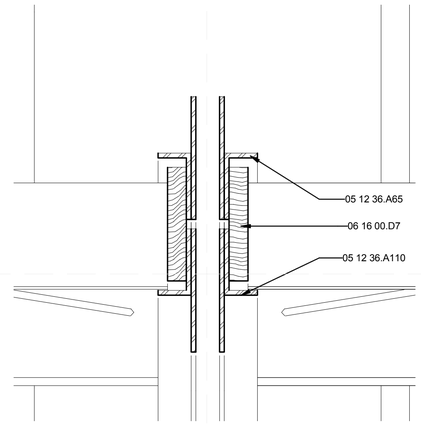

D3 MIDPOINT MODULE FRAMING DETAIL
3" = 1'-0"

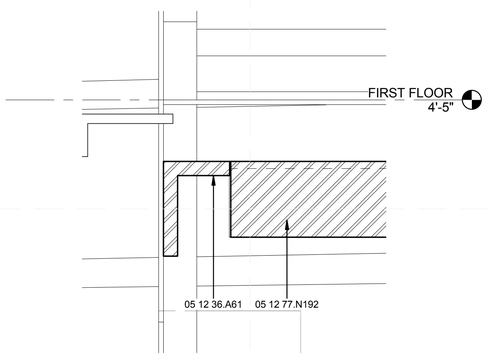

B1 WEST END FLOOR SECTION DETAIL
3" = 1'-0"

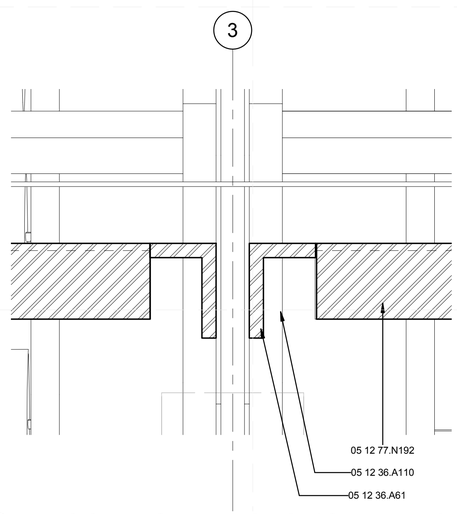

B3 FLOOR MODULE SECTION DETAIL
3" = 1'-0"

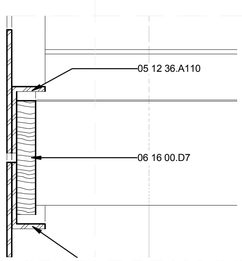

A1 WEST END CRADLE BEAM CONNECTION
3" = 1'-0"

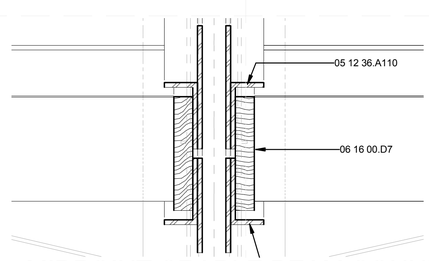

A3 MIDPOINT CRADLE BEAM CONNECTION
3" = 1'-0"

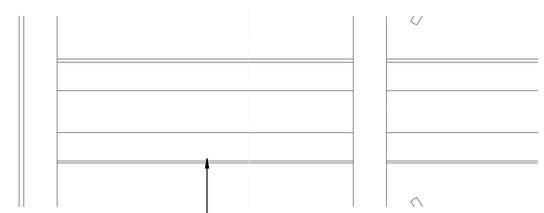

A5 SHELL HALVES CONECTION DETAIL
3" = 1'-0"

GENERAL SHEET NOTES

REFERENCE KEYNOTES

05 12 36.A61	L5X3X0.5
05 12 36.A65	L5X3X0.25
05 12 36.A110	L3X2.5X0.25
05 12 77.N192	WT4X12
06 16 00.D7	1/2" EXTERIOR GRADE PLYWOOD
06 17 23	PARALLEL STRAND LUMBER

SHEET KEYNOTES

teamhawai'i
halepilihonua

TEAM NAME: UNIVERSITY OF HAWAII (TEAM HAWAII)
ADDRESS: UNIVERSITY OF HAWAI'I AT MĀNOA
2410 CAMPUS ROAD
HONOLULU, HI 96822
CONTACT: ROCKWOOD@ARCH.HAWAII.EDU
WWW.SOLAR.HAWAII.EDU

CONSULTANTS
ARCHITECTURE:
ENGINEERS:
LANDSCAPING:
CODE CONSULTANTS:

CLIENT
U.S. DEPARTMENT OF ENERGY
SOLAR DECATHLON 2011
WWW.SOLARDECATHLON.GOV

U.S. DEPARTMENT OF ENERGY
SOLAR DECATHLON

MARK	DATE	DESCRIPTION

LOT NUMBER: 306
DRAWN BY: UNIVERSITY OF HAWAI'I
CHECKED BY: CHECKER
COPYRIGHT: UNIVERSITY OF HAWAI'I
SCHOOL OF ARCHITECTURE

SHEET TITLE
SECTION DETAILS

S-511

5/9/2011 5:32:07 PM

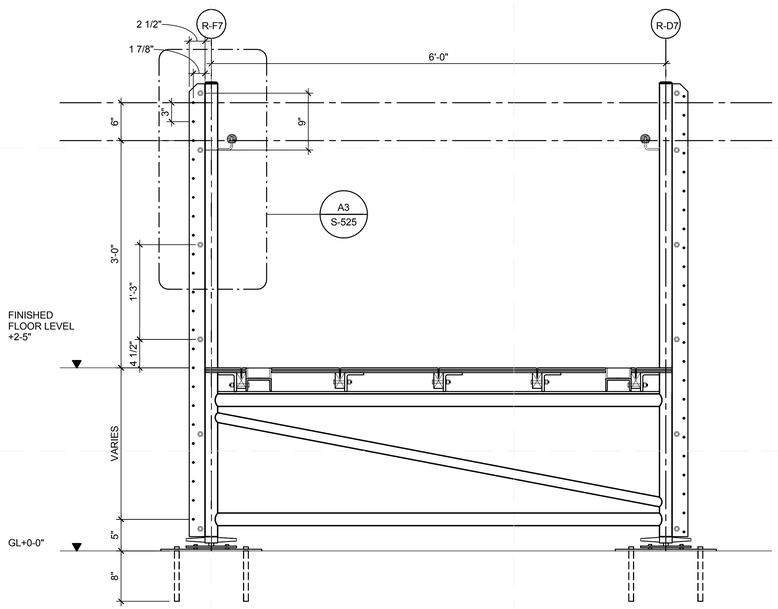

D1 TRANSVERSE MID-LANDING SECTION

1" = 1'-0"

0 1' 2' 3'

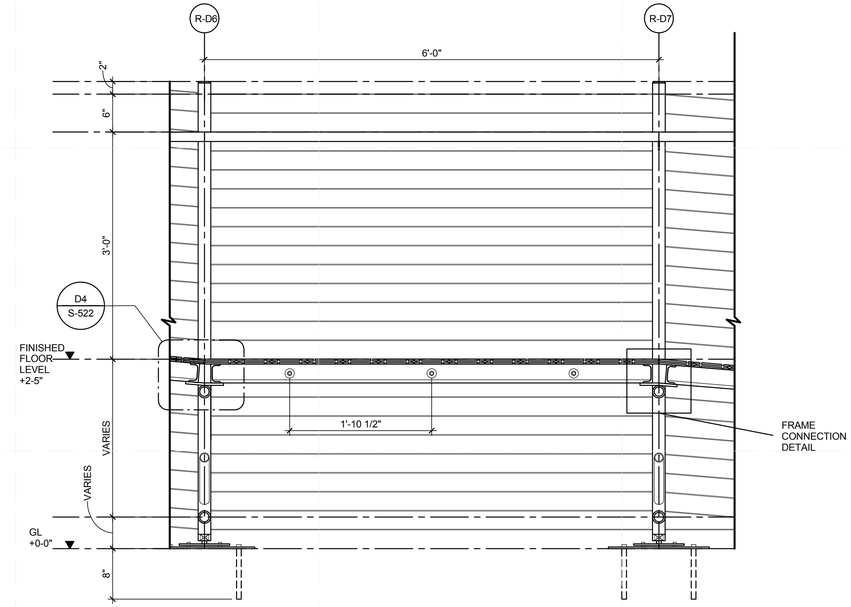

D3 LONGITUDINAL MID-LANDING SECTION

1" = 1'-0"

0 1' 2' 3'

GENERAL SHEET NOTES

REFERENCE KEYNOTES

SHEET KEYNOTES

teamhawai'i

halepilihonua

TEAM NAME: UNIVERSITY OF HAWAII (TEAM HAWAII)

ADDRESS: UNIVERSITY OF HAWAI'I AT MĀNOA
2410 CAMPUS ROAD
HONOLULU, HI 96822

CONTACT: ROCKWOOD@ARCH.HAWAII.EDU
WWW.SOLAR.HAWAII.EDU

CONSULTANTS

ARCHITECTURE:

ENGINEERS:

LANDSCAPING:

CODE CONSULTANTS:

CLIENT

U.S. DEPARTMENT OF ENERGY

SOLAR DECATHLON 2011

WWW.SOLARDECATHLON.GOV

U.S. DEPARTMENT OF ENERGY SOLAR DECATHLON

MARK	DATE	DESCRIPTION

LOT NUMBER:	306
DRAWN BY:	UNIVERSITY OF HAWAI'I
CHECKED BY:	CHECKER
COPYRIGHT:	UNIVERSITY OF HAWAI'I SCHOOL OF ARCHITECTURE

SHEET TITLE

RAMP AND DECK DETAILS

S-521

5/8/2011 5:32:12 PM

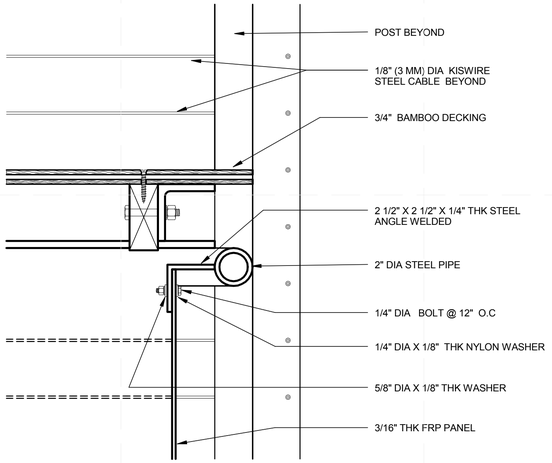

TOP FRP CONNECTION

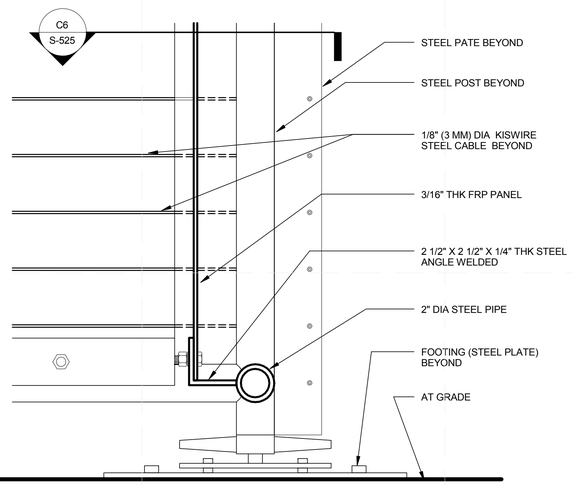

BOTTOM FRP CONNECTION

A1 RAMP FRP PANEL CONNECTION DETAIL

3" = 1'-0"

0 3" 6" 1'

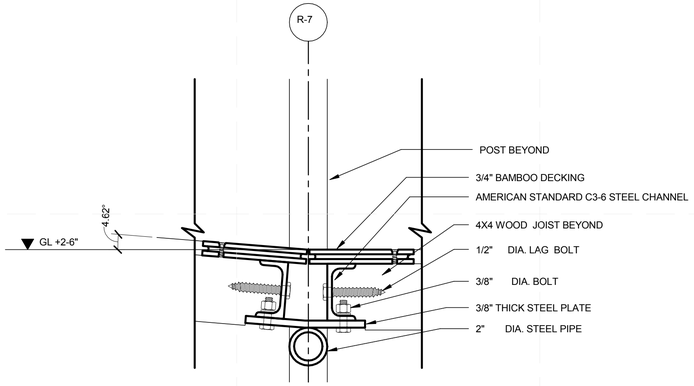

D4 RAMP MID LANDING TO SLOPE TRANSITION

3" = 1'-0"

0 3" 6" 1'

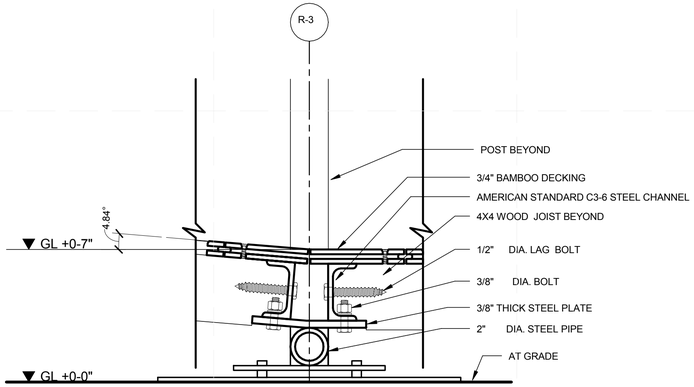

A4 RAMP BOTTOM LANDING TRANSITION

3" = 1'-0"

0 3" 6" 1'

GENERAL SHEET NOTES

REFERENCE KEYNOTES

SHEET KEYNOTES

teamhawai'i

halepilihonua

TEAM NAME:	UNIVERSITY OF HAWAII (TEAM HAWAII)
ADDRESS:	UNIVERSITY OF HAWAI'I AT MĀNOA 2410 CAMPUS ROAD HONOLULU, HI 96822
CONTACT:	ROCKWOOD@ARCH.HAWAII.EDU WWW.SOLAR.HAWAII.EDU

CONSULTANTS

ARCHITECTURE:

ENGINEERS:

LANDSCAPING:

CODE CONSULTANTS:

CLIENT

U.S. DEPARTMENT OF ENERGY

SOLAR DECATHLON 2011

WWW.SOLARDECATHLON.GOV

U.S. DEPARTMENT OF ENERGY SOLAR DECATHLON

MARK	DATE	DESCRIPTION

LOT NUMBER:	306
DRAWN BY:	UNIVERSITY OF HAWAI'I
CHECKED BY:	Checker
COPYRIGHT:	UNIVERSITY OF HAWAI'I SCHOOL OF ARCHITECTURE

SHEET TITLE

RAMP AND DECK DETAILS

S-522

5/9/2011 5:32:17 PM

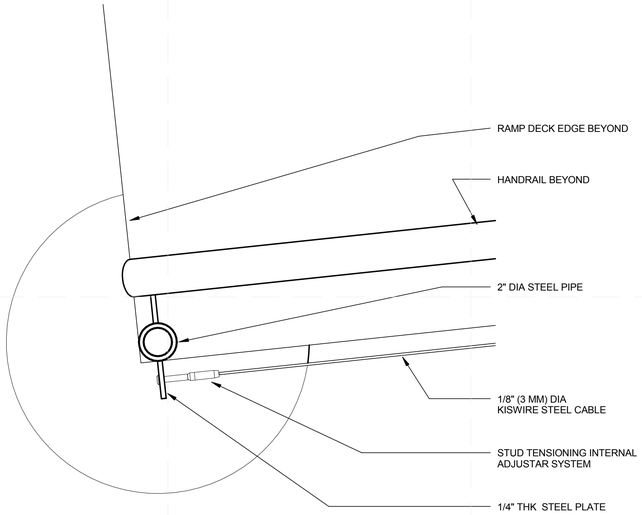

D1 RAMP GUARDRAIL WIRE CONNECTION END DETAIL

3" = 1'-0"

0 3" 6" 1'

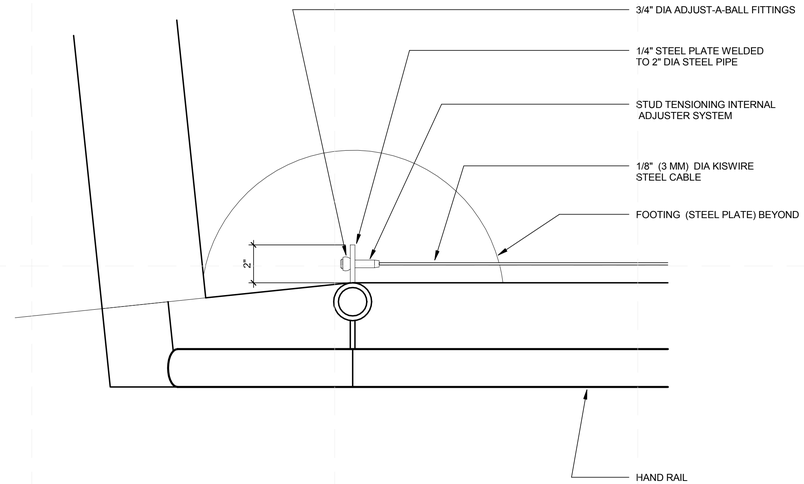

D4 RAMP GUARDRAIL WIRE CONNECTION DETAIL

3" = 1'-0"

0 3" 6" 1'

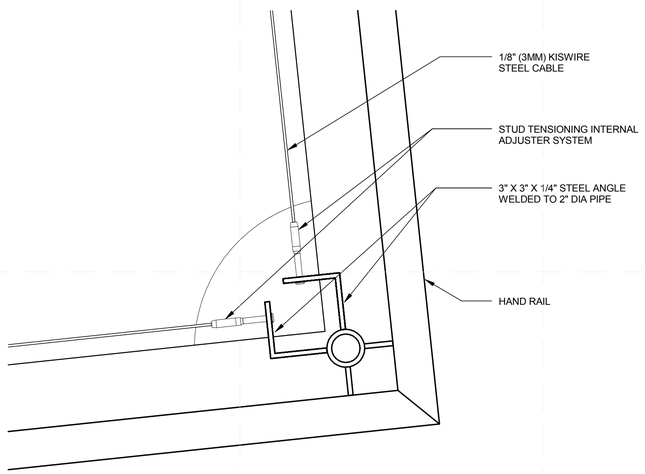

B1 RAMP GUARDRAIL WIRE CONNECTION INSIDE CORNER RAIL DET

3" = 1'-0"

0 3" 6" 1'

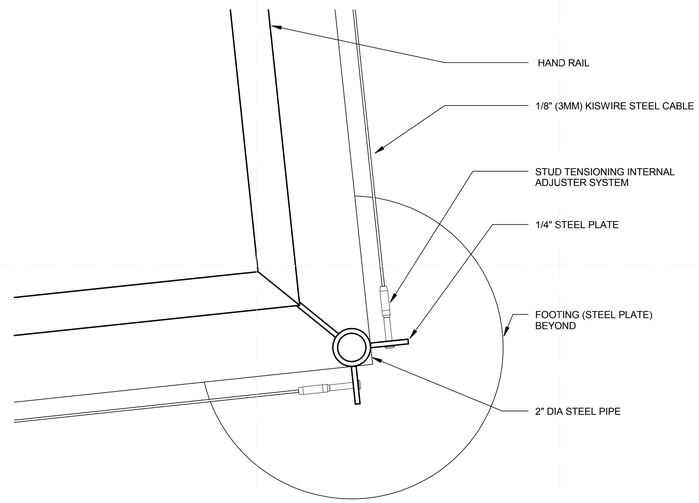

B4 RAMP GUARDRAIL WIRE DETAIL AT OUTSIDE CORNER

3" = 1'-0"

0 3" 6" 1'

GENERAL SHEET NOTES

REFERENCE KEYNOTES

SHEET KEYNOTES

teamhawai'i

halepilihonua

TEAM NAME:	UNIVERSITY OF HAWAII (TEAM HAWAII)
ADDRESS:	UNIVERSITY OF HAWAI'I AT MĀNOA 2410 CAMPUS ROAD HONOLULU, HI 96822
CONTACT:	ROCKWOOD@ARCH.HAWAII.EDU WWW.SOLAR.HAWAII.EDU

CONSULTANTS

ARCHITECTURE:

ENGINEERS:

LANDSCAPING:

CODE CONSULTANTS:

CLIENT

U.S. DEPARTMENT OF ENERGY

SOLAR DECATHLON 2011

WWW.SOLARDECATHLON.GOV

U.S. DEPARTMENT OF ENERGY SOLAR DECATHLON

MARK	DATE	DESCRIPTION

LOT NUMBER:	306
DRAWN BY:	UNIVERSITY OF HAWAI'I
CHECKED BY:	Checker
COPYRIGHT:	UNIVERSITY OF HAWAI'I SCHOOL OF ARCHITECTURE

SHEET TITLE

RAMP AND DECK DETAILS

S-523

5/8/2011 5:32:21 PM

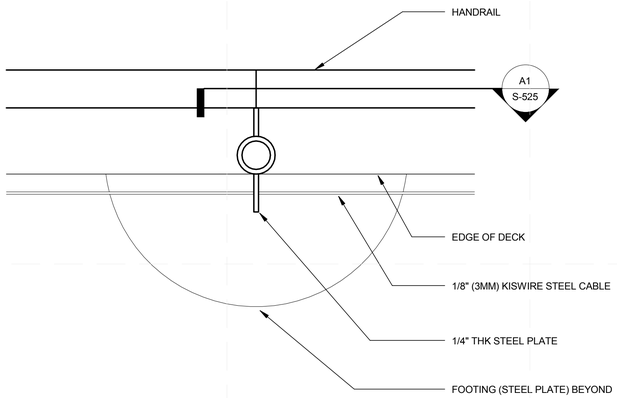

D1 RAMP GUARDRAIL WIRE CONNECTION DETAIL, TYP
3" = 1'-0"

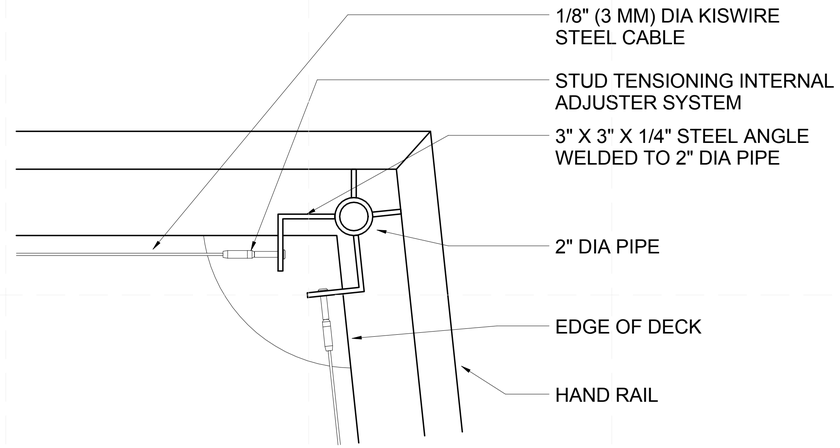

D4 RAMP GUARDRAIL WIRE CONNECTION @ CORNER
3" = 1'-0"

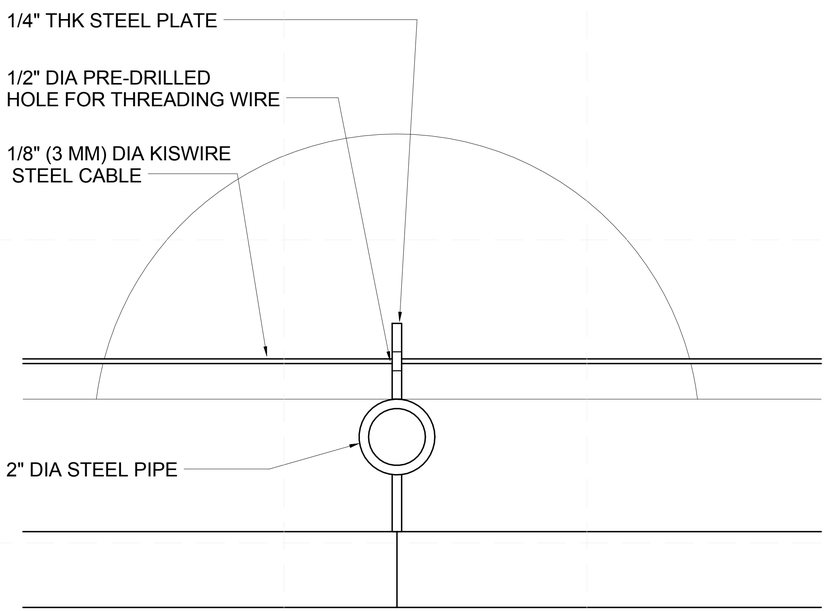

A1 RAMP GUARD RAIL WIRE CONNECTION TO STEEL PLATE DETAIL
6" = 1'-0"

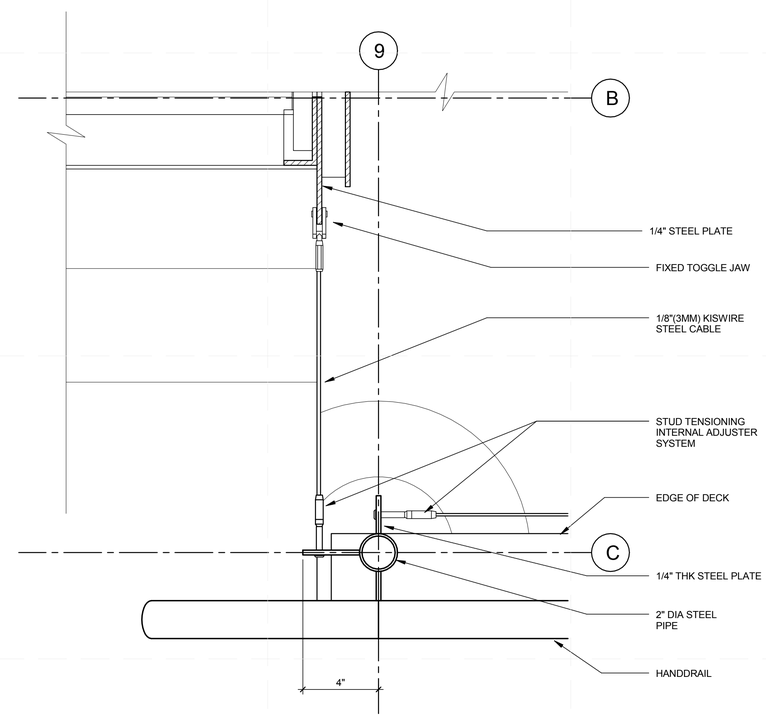

A4 HANDRAIL/GUARD RAIL END DETAIL @ HOUSE ENTRY
3" = 1'-0"

GENERAL SHEET NOTES

REFERENCE KEYNOTES

SHEET KEYNOTES

teamhawai'i
halepilihonua

TEAM NAME:	UNIVERSITY OF HAWAII (TEAM HAWAII)
ADDRESS:	UNIVERSITY OF HAWAI'I AT MĀNOA 2410 CAMPUS ROAD HONOLULU, HI 96822
CONTACT:	ROCKWOOD@ARCH.HAWAII.EDU WWW.SOLAR.HAWAII.EDU

CONSULTANTS
ARCHITECTURE:
ENGINEERS:
LANDSCAPING:
CODE CONSULTANTS:

CLIENT
U.S. DEPARTMENT OF ENERGY
SOLAR DECATHLON 2011
WWW.SOLARDECATHLON.GOV

U.S. DEPARTMENT OF ENERGY SOLAR DECATHLON

MARK	DATE	DESCRIPTION

LOT NUMBER:	306
DRAWN BY:	UNIVERSITY OF HAWAI'I
CHECKED BY:	Checker
COPYRIGHT:	UNIVERSITY OF HAWAI'I SCHOOL OF ARCHITECTURE

SHEET TITLE
RAMP AND DECK DETAILS

S-524

5/8/2011 5:32:25 PM

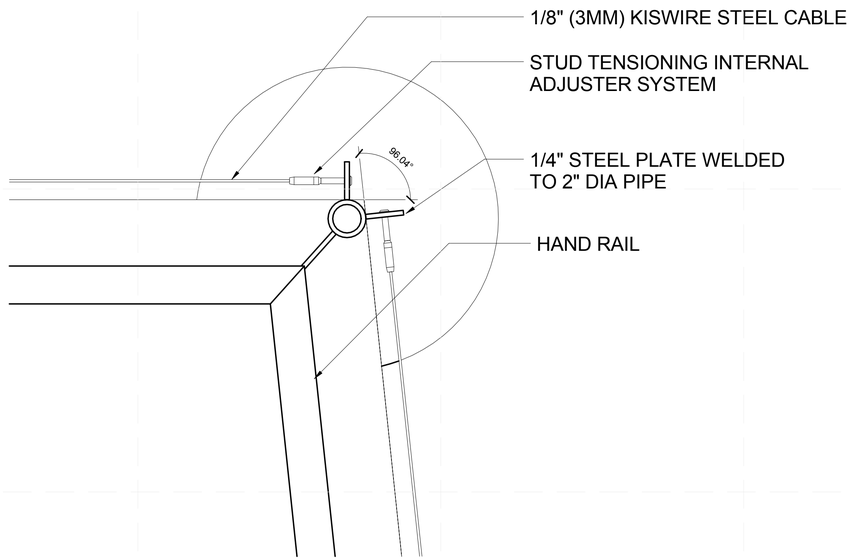

C2 RAMP GUARDRAIL WIRE CONNECTION DET
3" = 1'-0"

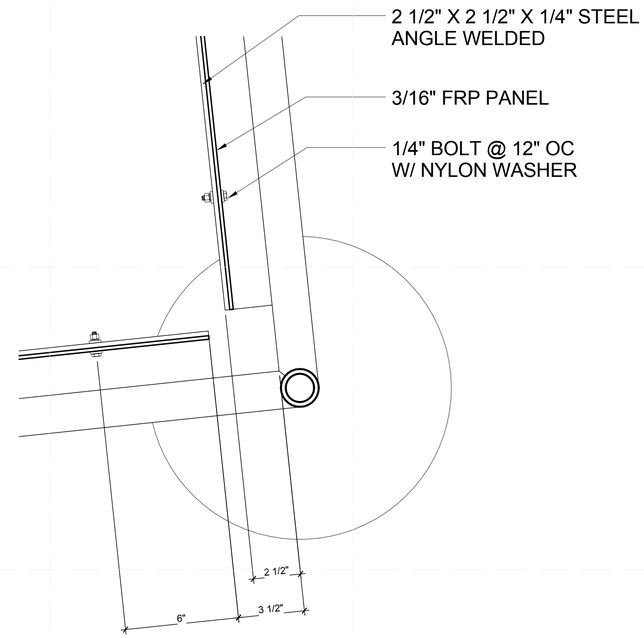

C6 RAMP FRP DETAIL PLAN VIEW
3" = 1'-0"

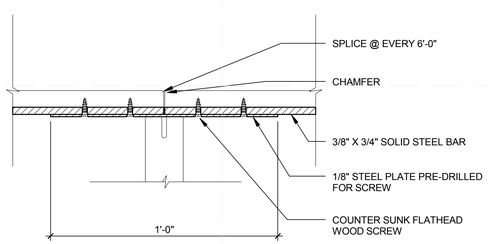

A1 HAND RAIL SPLICE DETAIL
3" = 1'-0"

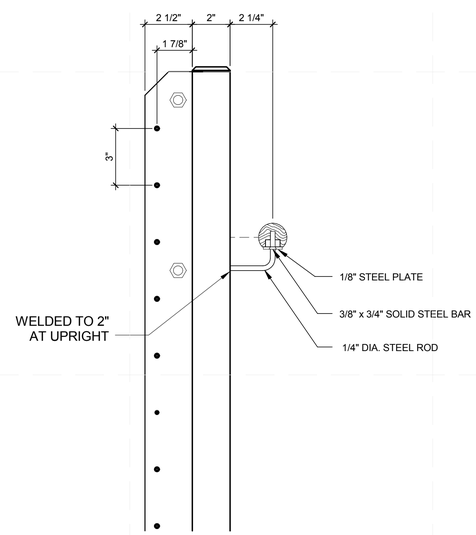

A3 HANDRAIL DETAIL
3" = 1'-0"

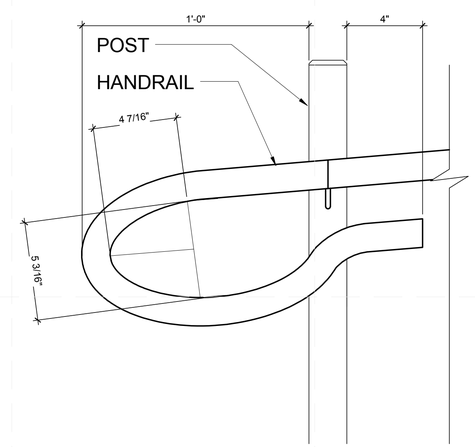

A6 HANDRAIL-END DETAIL
3" = 1'-0"

teamhawai'i
halepilihonua

TEAM NAME:	UNIVERSITY OF HAWAII (TEAM HAWAII)
ADDRESS:	UNIVERSITY OF HAWAI'I AT MĀNOA 2410 CAMPUS ROAD HONOLULU, HI 96822
CONTACT:	ROCKWOOD@ARCH.HAWAII.EDU WWW.SOLAR.HAWAII.EDU

CONSULTANTS
ARCHITECTURE:
ENGINEERS:
LANDSCAPING:
CODE CONSULTANTS:

CLIENT
U.S. DEPARTMENT OF ENERGY
SOLAR DECATHLON 2011
WWW.SOLARDECATHLON.GOV

U.S. DEPARTMENT OF ENERGY SOLAR DECATHLON

MARK	DATE	DESCRIPTION

LOT NUMBER:	306
DRAWN BY:	UNIVERSITY OF HAWAI'I
CHECKED BY:	Checker
COPYRIGHT:	UNIVERSITY OF HAWAI'I SCHOOL OF ARCHITECTURE

SHEET TITLE
RAMP AND DECK DETAILS

S-525

5/8/2011 5:32:28 PM

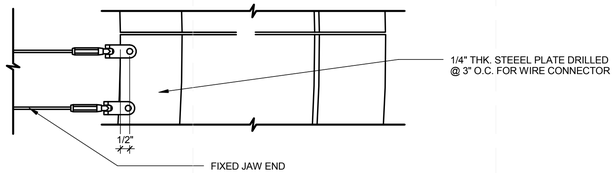

ELEVATION

E1 RAMP GUARDRAIL END CONNECTION DETAIL 1

3" = 1'-0"

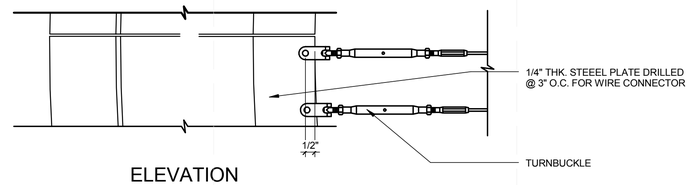

ELEVATION

E4 RAMP GUARDRAIL TURNBUCKLE CONNECTION DETAIL 1

3" = 1'-0"

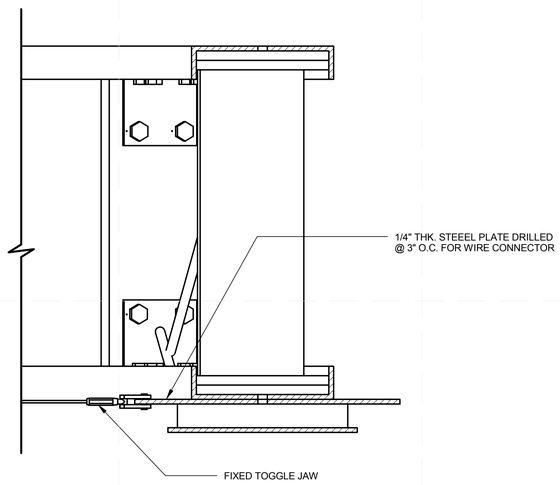

PLAN

C1 RAMP GUARDRAIL END CONNECTION DETAIL 2

3" = 1'-0"

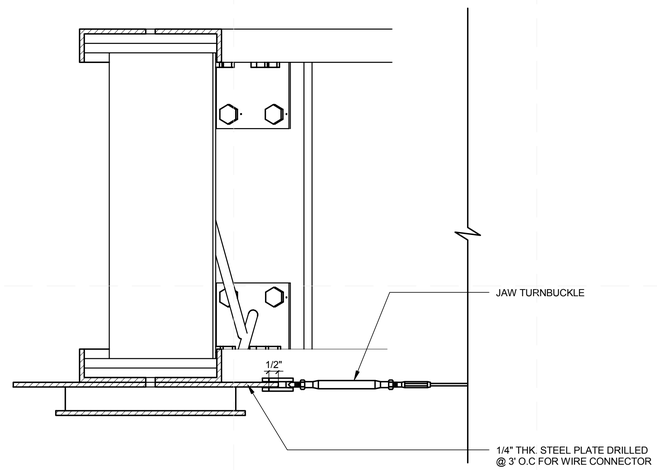

PLAN

C4 RAMP GUARDRAIL TURNBUCKLE CONNECTION DETAIL 2

3" = 1'-0"

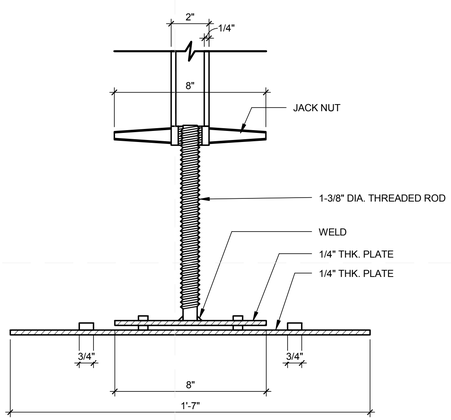

A1 TYPICAL LEVER JACK ASSEMBLY

3" = 1'-0"

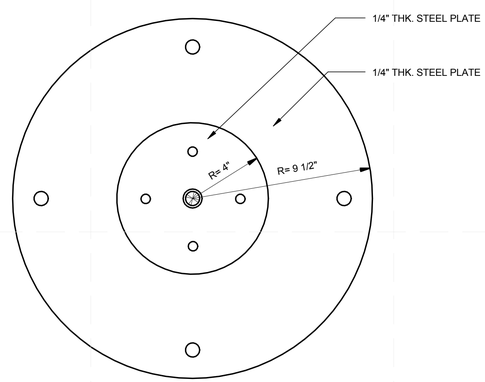

A3 TYPICAL LEVER JACK BASE PLAN

3" = 1'-0"

5/6/2011 5:32:31 PM

teamhawai'i

halepilihonua

TEAM NAME:	UNIVERSITY OF HAWAII (TEAM HAWAII)
ADDRESS:	UNIVERSITY OF HAWAI'I AT MĀNOA 2410 CAMPUS ROAD HONOLULU, HI 96822
CONTACT:	ROCKWOOD@ARCH.HAWAII.EDU WWW.SOLAR.HAWAII.EDU

CONSULTANTS

ARCHITECTURE:

ENGINEERS:

LANDSCAPING:

CODE CONSULTANTS:

CLIENT

U.S. DEPARTMENT OF ENERGY

SOLAR DECATHLON 2011

WWW.SOLARDECATHLON.GOV

U.S. DEPARTMENT OF ENERGY SOLAR DECATHLON

MARK	DATE	DESCRIPTION

LOT NUMBER:	306
DRAWN BY:	UNIVERSITY OF HAWAI'I
CHECKED BY:	Checker
COPYRIGHT:	UNIVERSITY OF HAWAI'I SCHOOL OF ARCHITECTURE

SHEET TITLE

RAMP AND DECK DETAILS

S-526

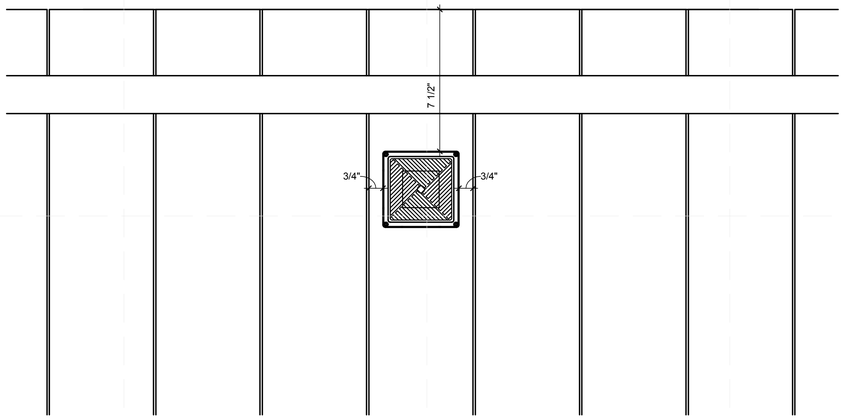

D1 LED PAVER LIGHT
3" = 1'-0"

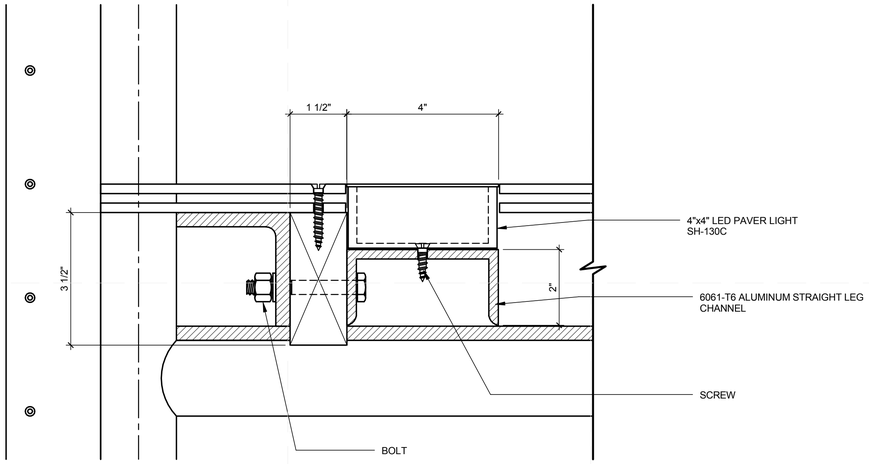

D5 LED PAVER LIGHT DETAIL
6" = 1'-0"

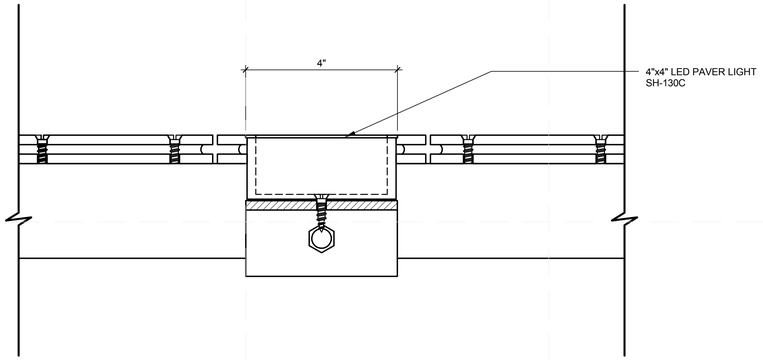

B5 LED PAVER SECTION DETAIL
6" = 1'-0"

teamhawai'i
halepilihonua

TEAM NAME:	UNIVERSITY OF HAWAII (TEAM HAWAII)
ADDRESS:	UNIVERSITY OF HAWAI'I AT MĀNOA 2410 CAMPUS ROAD HONOLULU, HI 96822
CONTACT:	ROCKWOOD@ARCH.HAWAII.EDU WWW.SOLAR.HAWAII.EDU

CONSULTANTS

ARCHITECTURE:
ENGINEERS:
LANDSCAPING:
CODE CONSULTANTS:

CLIENT
U.S. DEPARTMENT OF ENERGY
SOLAR DECATHLON 2011
WWW.SOLARDECATHLON.GOV

U.S. DEPARTMENT OF ENERGY SOLAR DECATHLON

MARK	DATE	DESCRIPTION

LOT NUMBER:	306
DRAWN BY:	UNIVERSITY OF HAWAI'I
CHECKED BY:	Checker
COPYRIGHT:	UNIVERSITY OF HAWAI'I SCHOOL OF ARCHITECTURE

SHEET TITLE
RAMP AND DECK DETAILS

S-527

5/8/2011 5:32:33 PM

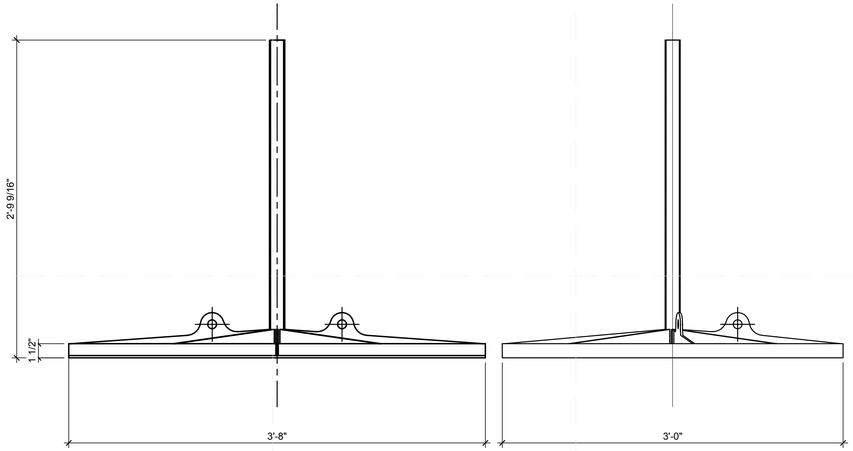

CORNER FOOTING ELEVATION

INNER FOOTING ELEVATION

D1 FOOTING ELEVATIONS

1 1/2" = 1'-0"

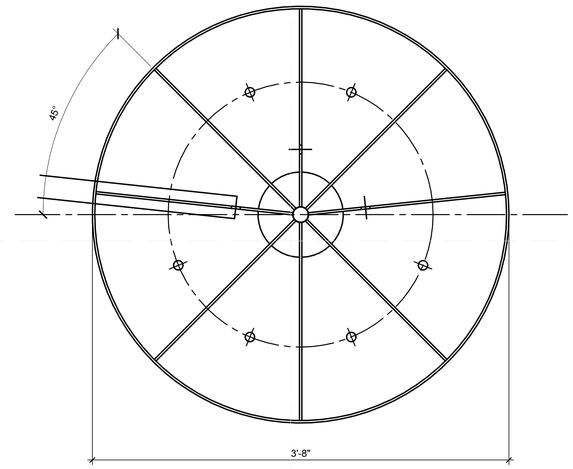

D4 CORNER FOOTING PLAN

1 1/2" = 1'-0"

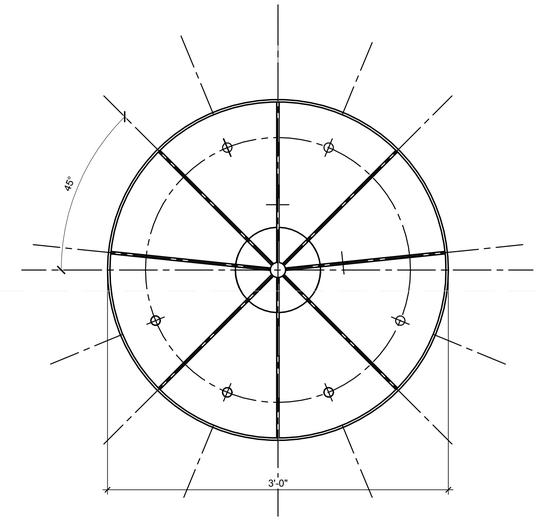

D6 INNER FOOTING PLAN

1 1/2" = 1'-0"

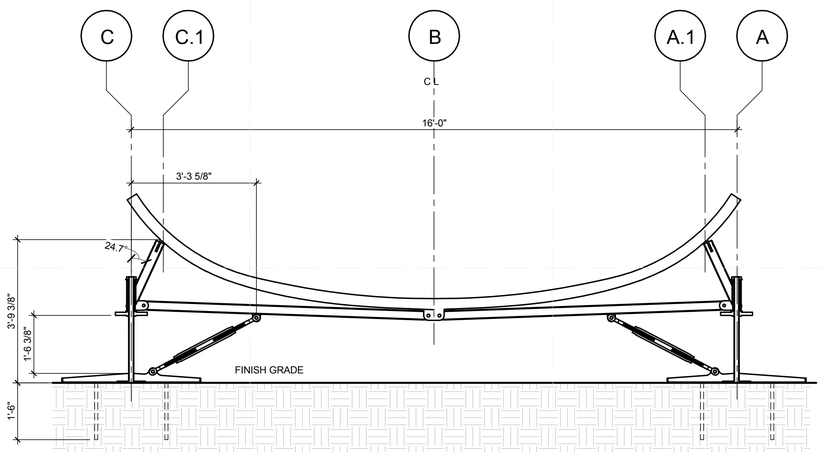

B1 SUBSTRUCTURE TRANSVERSE SECTION ELEVATED

1/2" = 1'-0"

TYP. HORIZONTAL TIE STRUT END

A1 STRUT CONNECTION ENDS

3" = 1'-0"

teamhawai'i

halepilihonua

TEAM NAME:	UNIVERSITY OF HAWAII (TEAM HAWAII)
ADDRESS:	UNIVERSITY OF HAWAI'I AT MĀNOA 2410 CAMPUS ROAD HONOLULU, HI 96822
CONTACT:	ROCKWOOD@ARCH.HAWAII.EDU WWW.SOLAR.HAWAII.EDU

CONSULTANTS

ARCHITECTURE:

ENGINEERS:

LANDSCAPING:

CODE CONSULTANTS:

CLIENT

U.S. DEPARTMENT OF ENERGY

SOLAR DECATHLON 2011

WWW.SOLARDECATHLON.GOV

U.S. DEPARTMENT OF ENERGY SOLAR DECATHLON

MARK	DATE	DESCRIPTION

LOT NUMBER:	306
DRAWN BY:	UNIVERSITY OF HAWAI'I
CHECKED BY:	Checker
COPYRIGHT:	UNIVERSITY OF HAWAI'I SCHOOL OF ARCHITECTURE

SHEET TITLE

FOUNDATION DETAILS

S-535

5/9/2011 5:32:37 PM

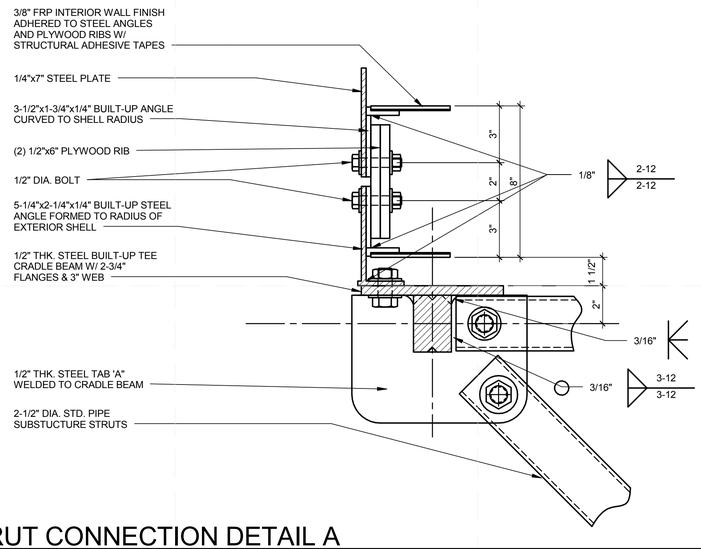

D1 STRUT CONNECTION DETAIL A

3" = 1'-0"

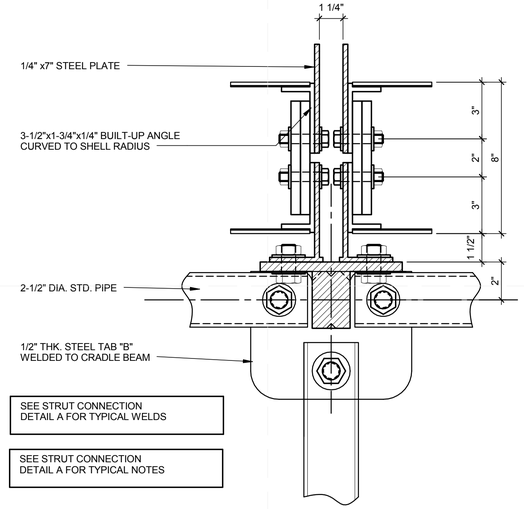

D4 STRUT CONNECTION DETAIL B

3" = 1'-0"

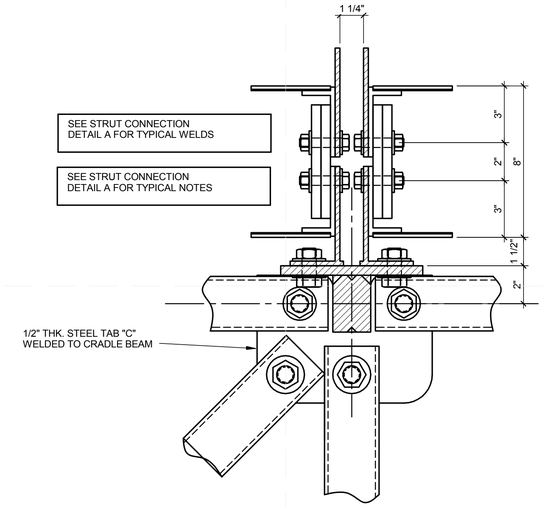

D6 STRUT CONNECTION DETAIL C

3" = 1'-0"

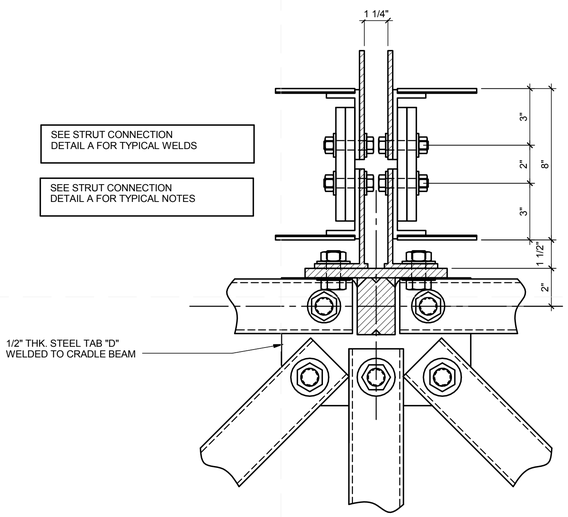

B1 STRUT CONNECTION DETAIL D

3" = 1'-0"

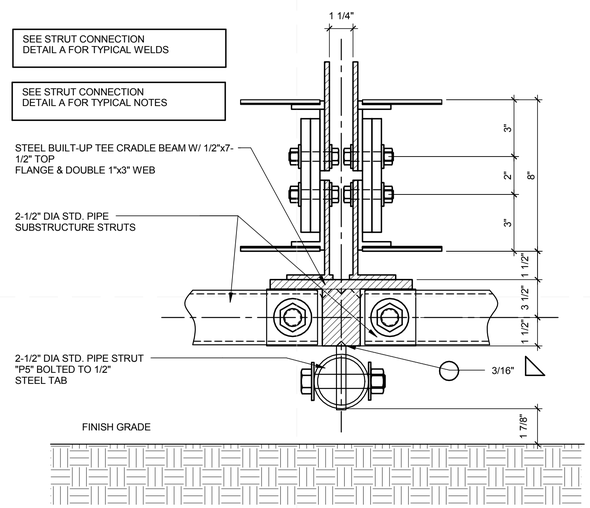

B3 LOW HORIZONTAL STRUT SECTION

3" = 1'-0"

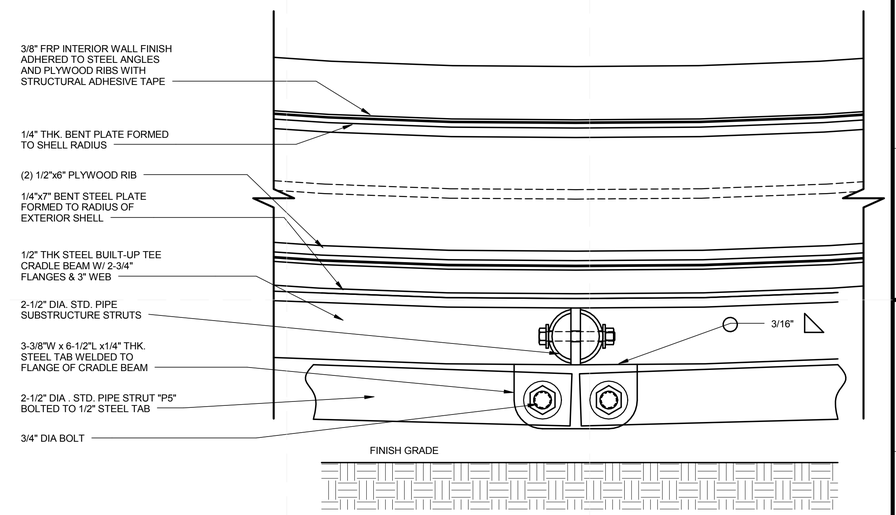

B5 LOW HORIZONTAL STRUT DETAIL

3" = 1'-0"

teamhawai'i

halepilihonua

TEAM NAME:	UNIVERSITY OF HAWAII (TEAM HAWAII)
ADDRESS:	UNIVERSITY OF HAWAI'I AT MĀNOA 2410 CAMPUS ROAD HONOLULU, HI 96822
CONTACT:	ROCKWOOD@ARCH.HAWAII.EDU WWW.SOLAR.HAWAII.EDU

CONSULTANTS

ARCHITECTURE:

ENGINEERS:

LANDSCAPING:

CODE CONSULTANTS:

CLIENT

U.S. DEPARTMENT OF ENERGY

SOLAR DECATHLON 2011

WWW.SOLARDECATHLON.GOV

U.S. DEPARTMENT OF ENERGY SOLAR DECATHLON

MARK	DATE	DESCRIPTION

LOT NUMBER:	306
DRAWN BY:	UNIVERSITY OF HAWAI'I
CHECKED BY:	Checker
COPYRIGHT:	UNIVERSITY OF HAWAI'I SCHOOL OF ARCHITECTURE

SHEET TITLE

FOUNDATION DETAILS

S-536

5/6/2011 5:32:41 PM

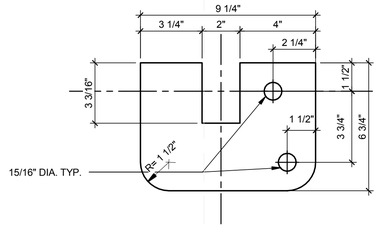

E1 STEEL TAB PLATE A
3" = 1'-0"

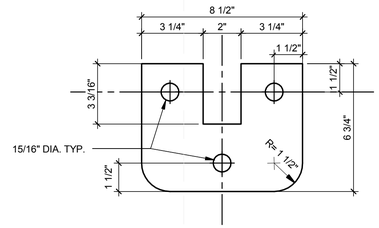

E3 STEEL TAB PLATE B
3" = 1'-0"

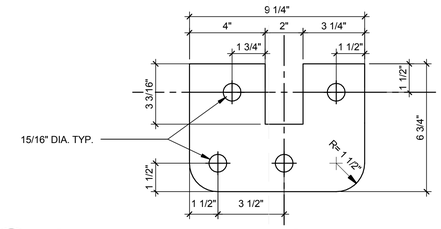

E5 STEEL TAB PLATE C
3" = 1'-0"

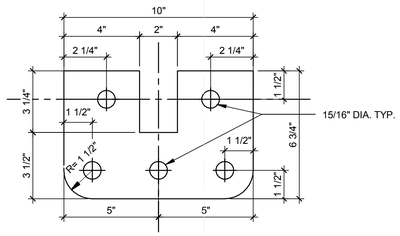

D1 STEEL TAB PLATE D
3" = 1'-0"

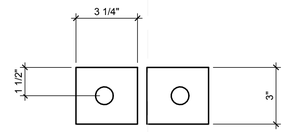

D3 STEEL TAB PLATE E
3" = 1'-0"

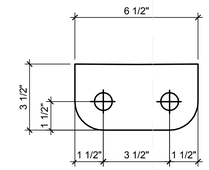

D5 STEEL TAB PLATE F
3" = 1'-0"

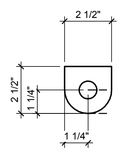

C1 STEEL TAB PLATE G
3" = 1'-0"

teamhawai'i
halepilihonua

TEAM NAME:	UNIVERSITY OF HAWAII (TEAM HAWAII)
ADDRESS:	UNIVERSITY OF HAWAI'I AT MĀNOA 2410 CAMPUS ROAD HONOLULU, HI 96822
CONTACT:	ROCKWOOD@ARCH.HAWAII.EDU WWW.SOLAR.HAWAII.EDU

CONSULTANTS

ARCHITECTURE:
ENGINEERS:
LANDSCAPING:
CODE CONSULTANTS:

CLIENT
U.S. DEPARTMENT OF ENERGY
SOLAR DECATHLON 2011
WWW.SOLARDECATHLON.GOV

U.S. DEPARTMENT OF ENERGY SOLAR DECATHLON

MARK	DATE	DESCRIPTION

LOT NUMBER:	306
DRAWN BY:	UNIVERSITY OF HAWAI'I
CHECKED BY:	Checker
COPYRIGHT:	UNIVERSITY OF HAWAI'I SCHOOL OF ARCHITECTURE

SHEET TITLE
FOUNDATION DETAILS

S-537

5/8/2011 5:32:44 PM

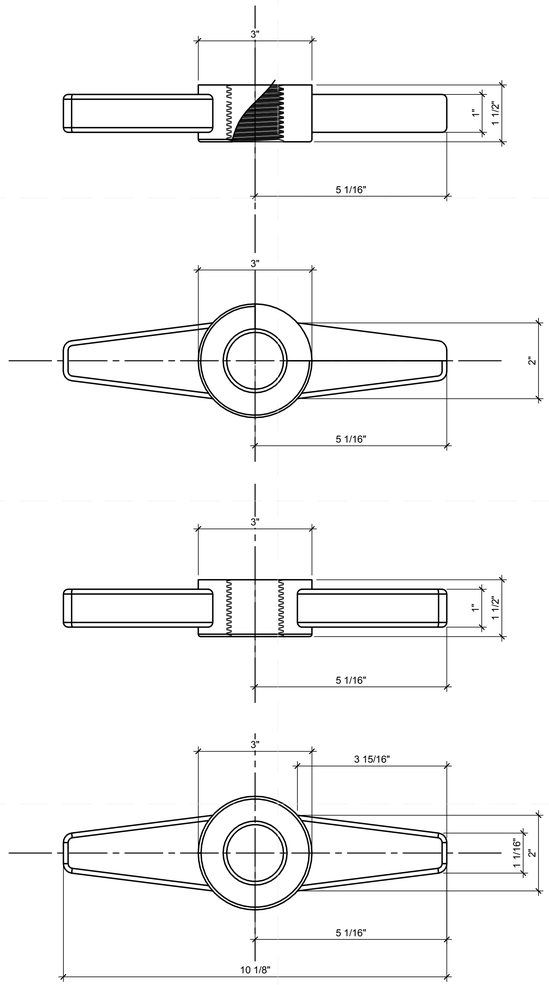

B1 JACK BASE LOWER NUT
6" = 1'-0"
0 1" 2" 3" 4"

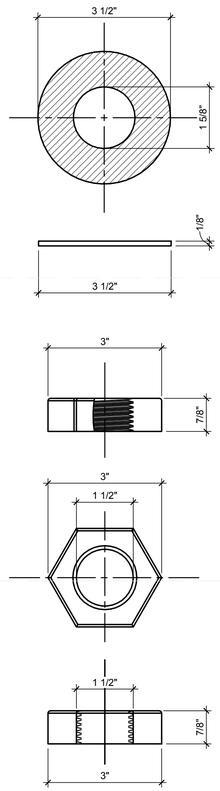

C3 JACK BASE UPPER NUT
6" = 1'-0"
0 1" 2" 3" 4"

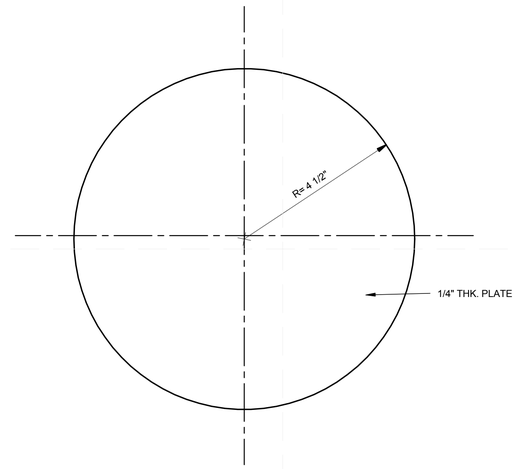

D4 SCREW JACK BASE
6" = 1'-0"
0 1" 2" 3" 4"

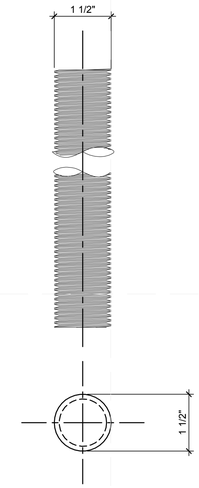

D6 SCREW JACK SHAFT
6" = 1'-0"
0 1" 2" 3" 4"

teamhawai'i
halepilihonua

TEAM NAME: UNIVERSITY OF HAWAII (TEAM HAWAII)
ADDRESS: UNIVERSITY OF HAWAI'I AT MĀNOA
2410 CAMPUS ROAD
HONOLULU, HI 96822
CONTACT: ROCKWOOD@ARCH.HAWAII.EDU
WWW.SOLAR.HAWAII.EDU

CONSULTANTS
ARCHITECTURE:
ENGINEERS:
LANDSCAPING:
CODE CONSULTANTS:

CLIENT
U.S. DEPARTMENT OF ENERGY
SOLAR DECATHLON 2011
WWW.SOLARDECATHLON.GOV

U.S. DEPARTMENT OF ENERGY
SOLAR DECATHLON

MARK	DATE	DESCRIPTION

LOT NUMBER: 306
DRAWN BY: UNIVERSITY OF HAWAI'I
CHECKED BY: Checker
COPYRIGHT: UNIVERSITY OF HAWAI'I
SCHOOL OF ARCHITECTURE

SHEET TITLE
FOUNDATION DETAILS

S-538

5/8/2011 5:32:46 PM

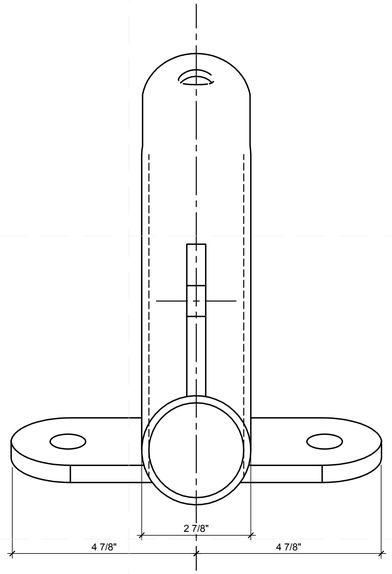

BOTTOM VIEW

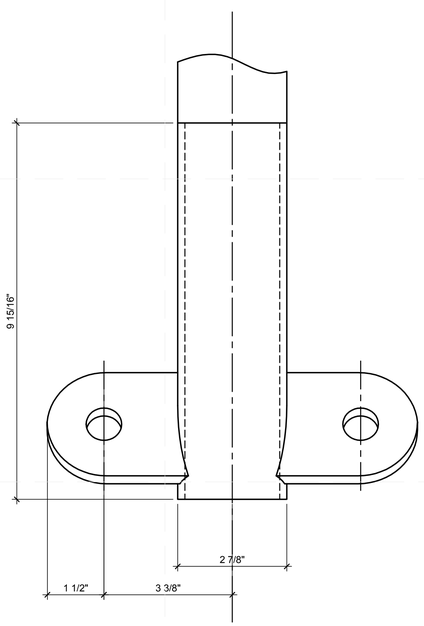

FRONT VIEW

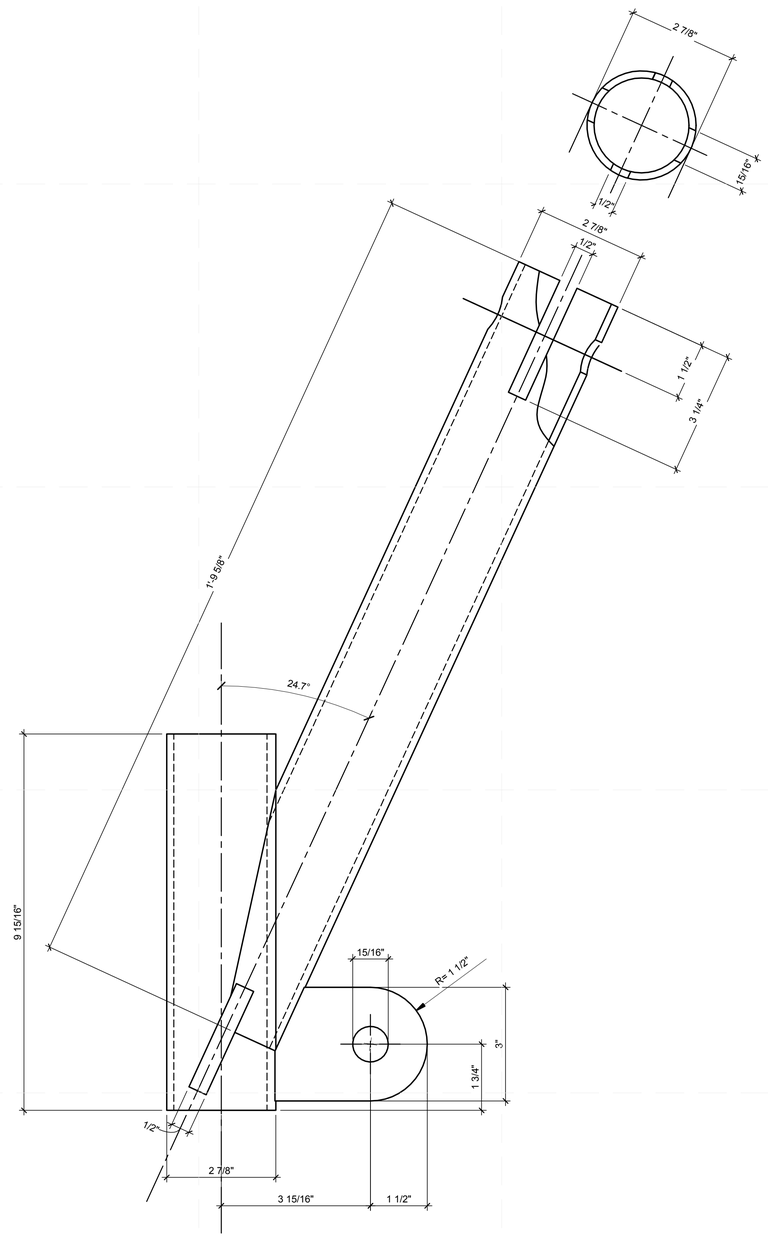

LEFT VIEW (RIGHT REVERSE)

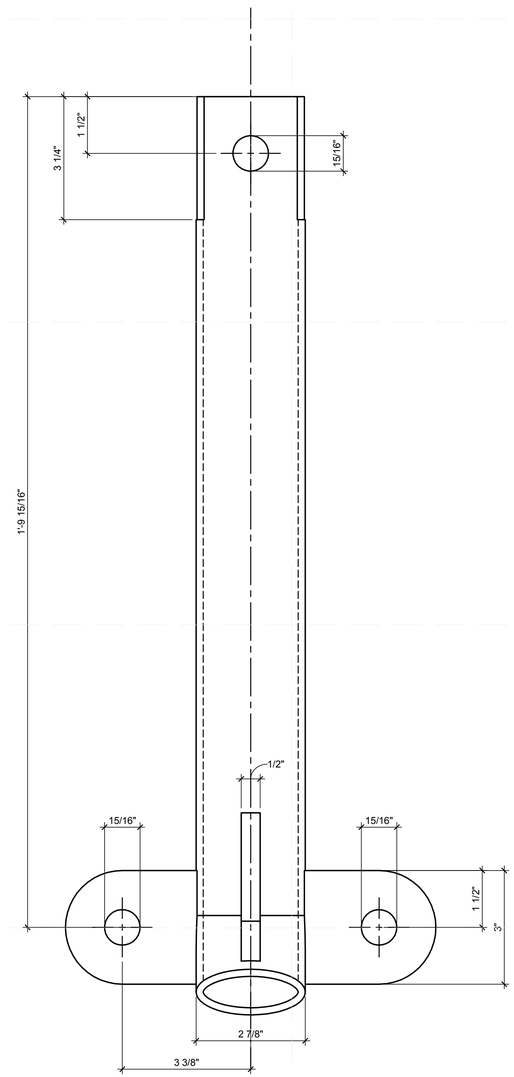

REAR VIEW

A1 JACK BASE PIPE SLEEVE PS1

6" = 1'-0"

0 1" 2" 3" 4"

5/8/2011 5:32:48 PM

teamhawai'i

halepilihonua

TEAM NAME: UNIVERSITY OF HAWAII (TEAM HAWAII)

ADDRESS: UNIVERSITY OF HAWAI'I AT MĀNOA
2410 CAMPUS ROAD
HONOLULU, HI 96822

CONTACT: ROCKWOOD@ARCH.HAWAII.EDU
WWW.SOLAR.HAWAII.EDU

CONSULTANTS

ARCHITECTURE:

ENGINEERS:

LANDSCAPING:

CODE CONSULTANTS:

CLIENT

U.S. DEPARTMENT OF ENERGY

SOLAR DECATHLON 2011

WWW.SOLARDECATHLON.GOV

U.S. DEPARTMENT OF ENERGY SOLAR DECATHLON

MARK	DATE	DESCRIPTION

LOT NUMBER: 306

DRAWN BY: UNIVERSITY OF HAWAI'I

CHECKED BY: Checker

COPYRIGHT: UNIVERSITY OF HAWAI'I
SCHOOL OF ARCHITECTURE

SHEET TITLE

FOUNDATION DETAILS

S-539

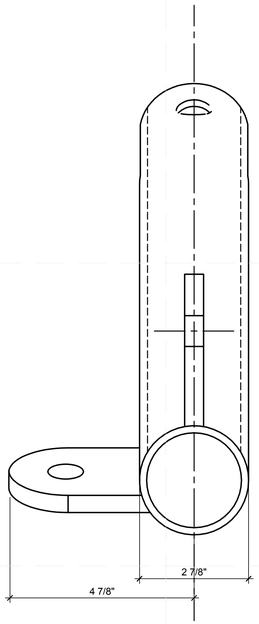

BOTTOM VIEW

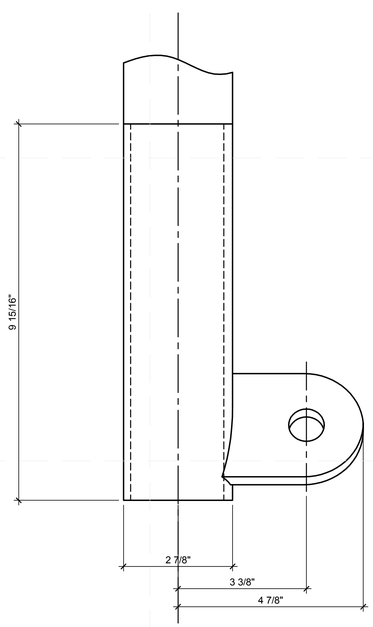

FRONT VIEW

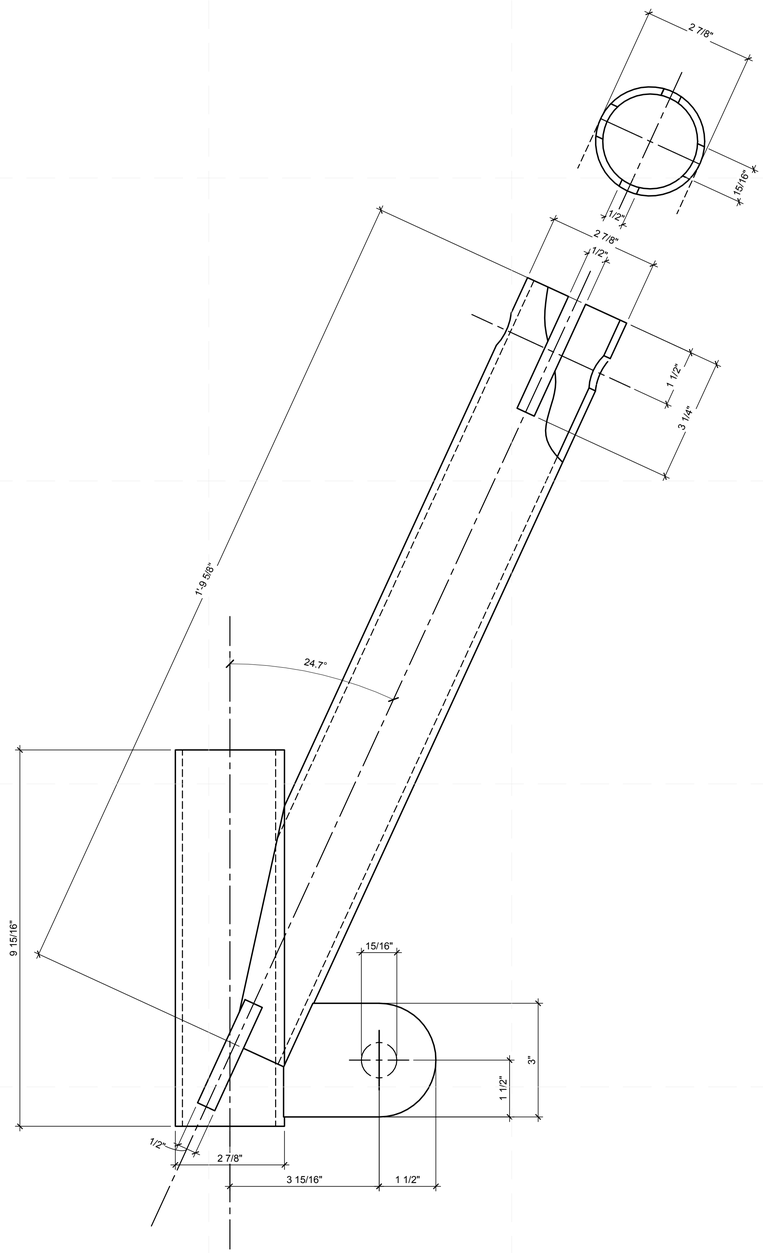

LEFT VIEW (RIGHT REVERSE)

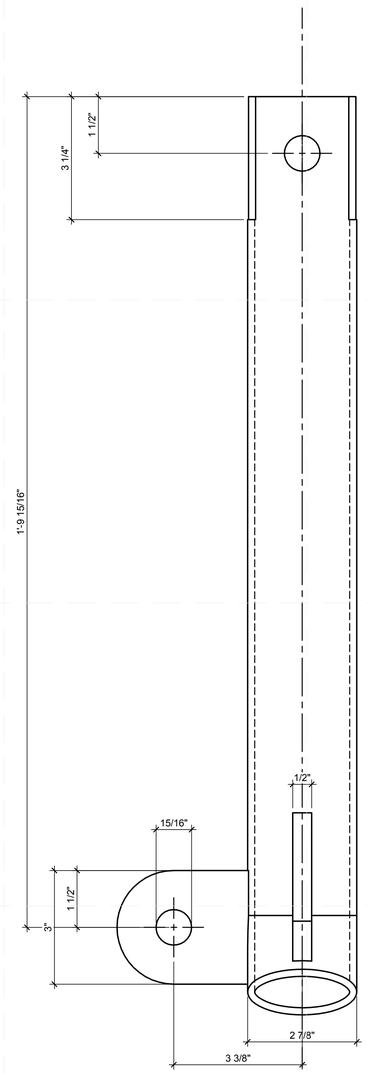

REAR VIEW

A1 JACK BASE PIPE SLEEVE PS2

6" = 1'-0"

0 1" 2" 3" 4"

5/9/2011 5:32:51 PM

teamhawai'i

halepilihonua

TEAM NAME: UNIVERSITY OF HAWAII (TEAM HAWAII)

ADDRESS: UNIVERSITY OF HAWAI'I AT MĀNOA
2410 CAMPUS ROAD
HONOLULU, HI 96822

CONTACT: ROCKWOOD@ARCH.HAWAII.EDU
WWW.SOLAR.HAWAII.EDU

CONSULTANTS

ARCHITECTURE:

ENGINEERS:

LANDSCAPING:

CODE CONSULTANTS:

CLIENT

U.S. DEPARTMENT OF ENERGY

SOLAR DECATHLON 2011

WWW.SOLARDECATHLON.GOV

U.S. DEPARTMENT OF ENERGY SOLAR DECATHLON

MARK	DATE	DESCRIPTION

LOT NUMBER: 306

DRAWN BY: UNIVERSITY OF HAWAI'I

CHECKED BY: Checker

COPYRIGHT: UNIVERSITY OF HAWAI'I
SCHOOL OF ARCHITECTURE

SHEET TITLE

FOUNDATION DETAILS

S-540

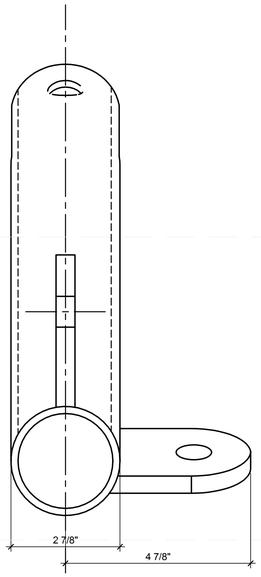

BOTTOM VIEW

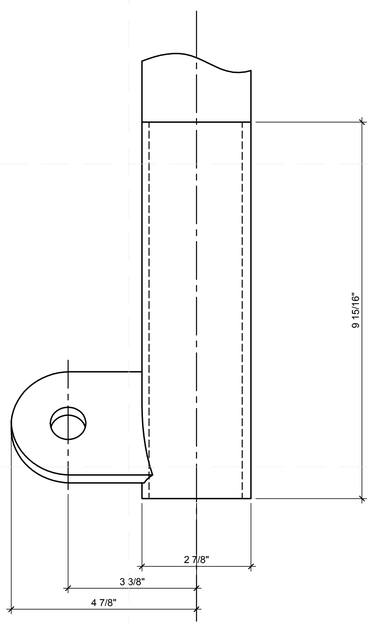

FRONT VIEW

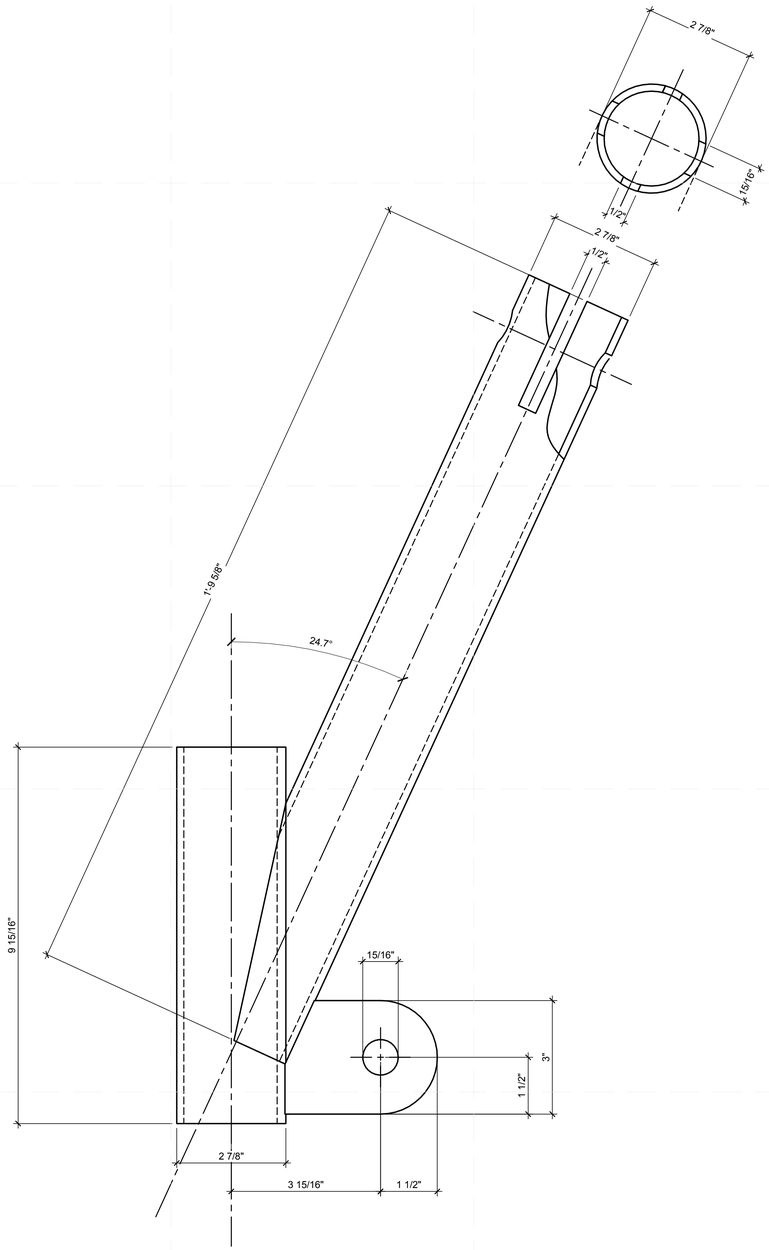

LEFT VIEW (RIGHT REVERSE)

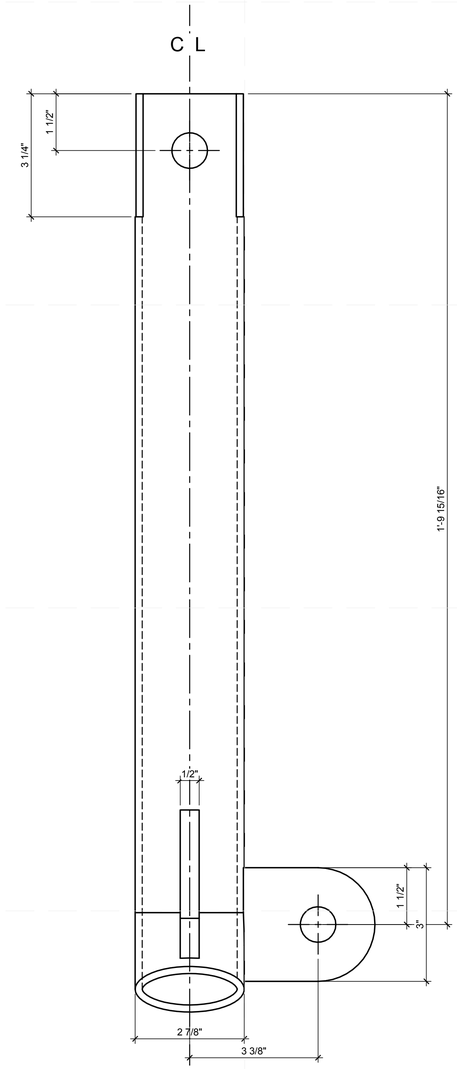

REAR VIEW

A1 JACK BASE PIPE SLEEVE PS3

6" = 1'-0"

0 1" 2" 3" 4"

5/8/2011 5:32:53 PM

teamhawai'i

halepilihonua

TEAM NAME:	UNIVERSITY OF HAWAII (TEAM HAWAII)
ADDRESS:	UNIVERSITY OF HAWAI'I AT MĀNOA 2410 CAMPUS ROAD HONOLULU, HI 96822
CONTACT:	ROCKWOOD@ARCH.HAWAII.EDU WWW.SOLAR.HAWAII.EDU

CONSULTANTS

ARCHITECTURE:

ENGINEERS:

LANDSCAPING:

CODE CONSULTANTS:

CLIENT

U.S. DEPARTMENT OF ENERGY

SOLAR DECATHLON 2011

WWW.SOLARDECATHLON.GOV

U.S. DEPARTMENT OF ENERGY SOLAR DECATHLON

MARK	DATE	DESCRIPTION

LOT NUMBER:	306
DRAWN BY:	UNIVERSITY OF HAWAI'I
CHECKED BY:	Checker
COPYRIGHT:	UNIVERSITY OF HAWAI'I SCHOOL OF ARCHITECTURE

SHEET TITLE

FOUNDATION DETAILS

S-541

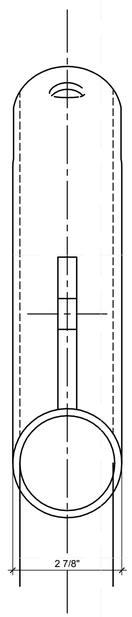

BOTTOM VIEW

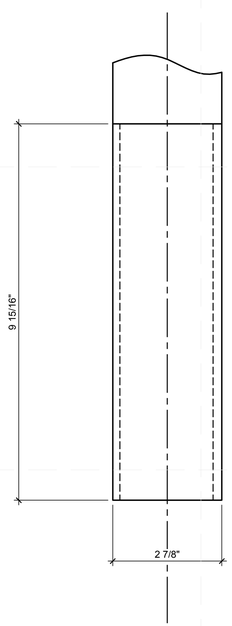

FRONT VIEW

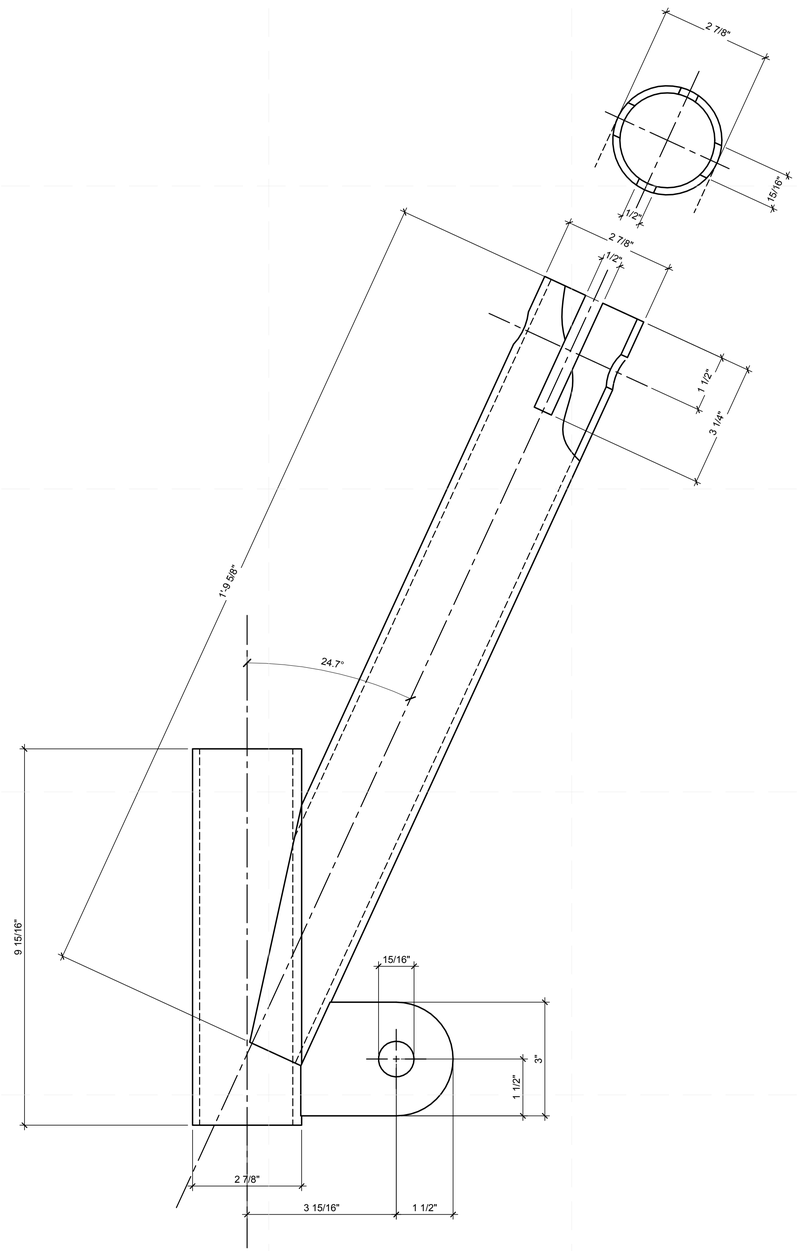

LEFT VIEW (RIGHT REVERSE)

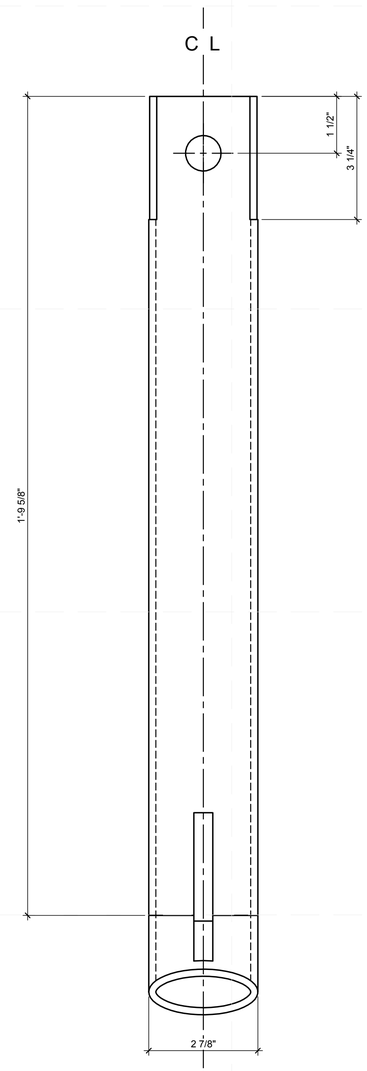

REAR VIEW

A1 JACK BASE PIPE SLEEVE PS4

6" = 1'-0"

0 1" 2" 3" 4"

5/8/2011 5:32:55 PM

teamhawai'i

halepilihonua

TEAM NAME:	UNIVERSITY OF HAWAII (TEAM HAWAII)
ADDRESS:	UNIVERSITY OF HAWAI'I AT MĀNOA 2410 CAMPUS ROAD HONOLULU, HI 96822
CONTACT:	ROCKWOOD@ARCH.HAWAII.EDU WWW.SOLAR.HAWAII.EDU

CONSULTANTS

ARCHITECTURE:

ENGINEERS:

LANDSCAPING:

CODE CONSULTANTS:

CLIENT

U.S. DEPARTMENT OF ENERGY

SOLAR DECATHLON 2011

WWW.SOLARDECATHLON.GOV

U.S. DEPARTMENT OF ENERGY SOLAR DECATHLON

MARK	DATE	DESCRIPTION

LOT NUMBER:	306
DRAWN BY:	UNIVERSITY OF HAWAI'I
CHECKED BY:	Checker
COPYRIGHT:	UNIVERSITY OF HAWAI'I SCHOOL OF ARCHITECTURE

SHEET TITLE

FOUNDATION DETAILS

S-542

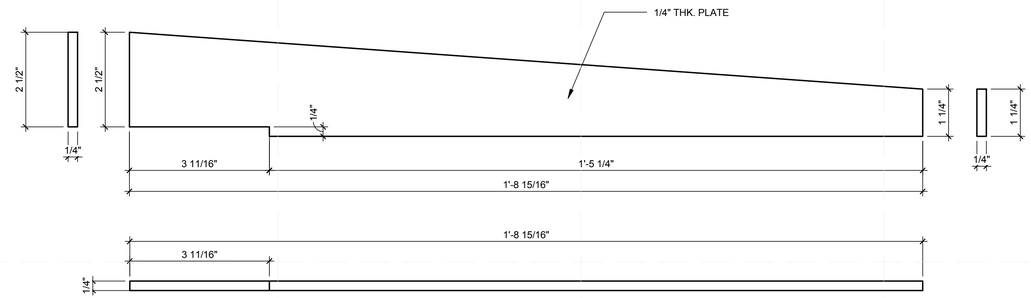

D1 FOOTING BASE 1 STIFFENER PLATE S1

6" = 1'-0"

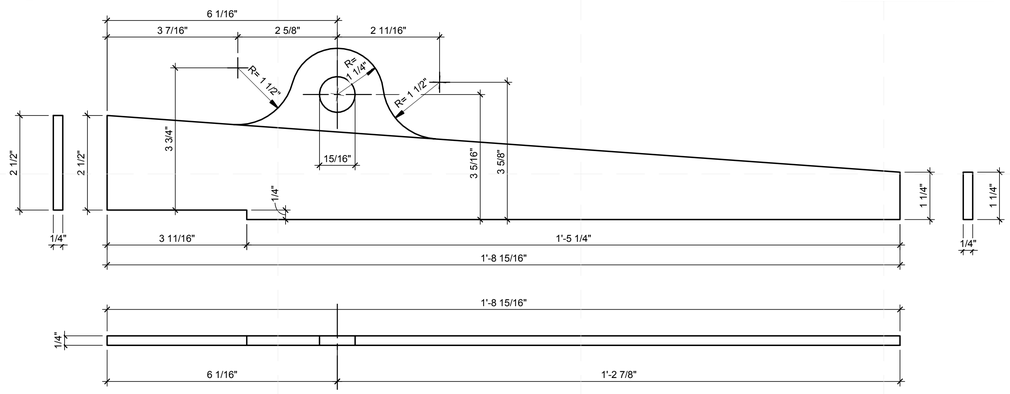

C1 FOOTING BASE 1 STIFFENER PLATE S2

6" = 1'-0"

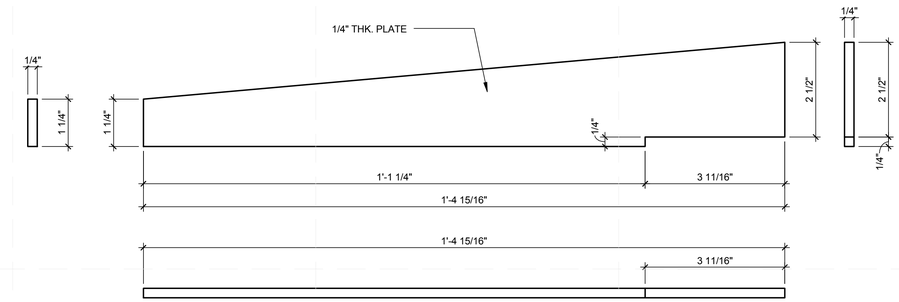

D5 FOOTING BASE 2 STIFFENER PLATE S3

6" = 1'-0"

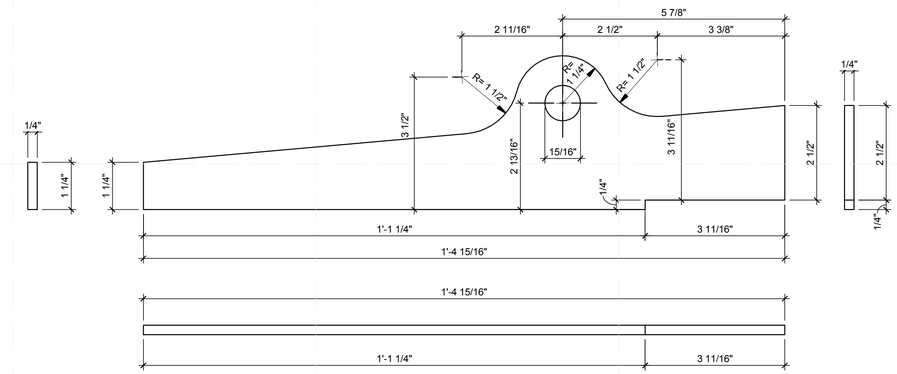

C5 FOOTING BASE 2 STIFFENER PLATE S4

6" = 1'-0"

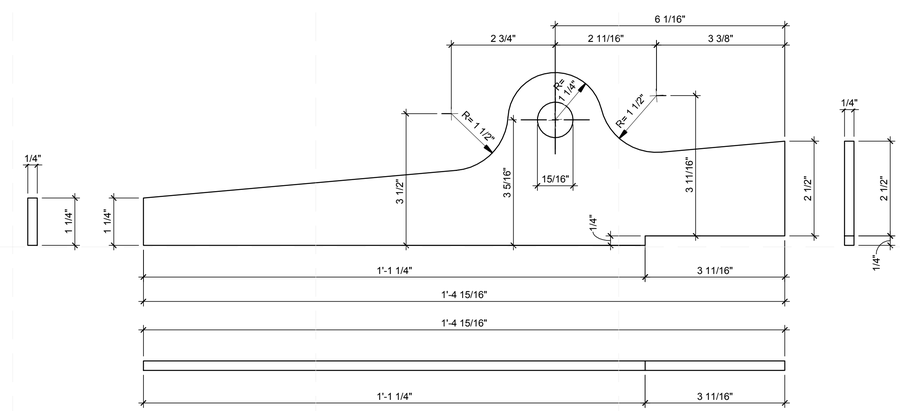

A5 FOOTING BASE 2 STIFFENER PLATE S5

6" = 1'-0"

teamhawai'i

halepilihonua

TEAM NAME:	UNIVERSITY OF HAWAII (TEAM HAWAII)
ADDRESS:	UNIVERSITY OF HAWAI'I AT MĀNOA 2410 CAMPUS ROAD HONOLULU, HI 96822
CONTACT:	ROCKWOOD@ARCH.HAWAII.EDU WWW.SOLAR.HAWAII.EDU

CONSULTANTS

ARCHITECTURE:

ENGINEERS:

LANDSCAPING:

CODE CONSULTANTS:

CLIENT

U.S. DEPARTMENT OF ENERGY

SOLAR DECATHLON 2011

WWW.SOLARDECATHLON.GOV

U.S. DEPARTMENT OF ENERGY SOLAR DECATHLON

MARK	DATE	DESCRIPTION

LOT NUMBER:	306
DRAWN BY:	UNIVERSITY OF HAWAI'I
CHECKED BY:	Checker
COPYRIGHT:	UNIVERSITY OF HAWAI'I SCHOOL OF ARCHITECTURE

SHEET TITLE

FOUNDATION DETAILS

S-543

5/8/2011 5:32:58 PM

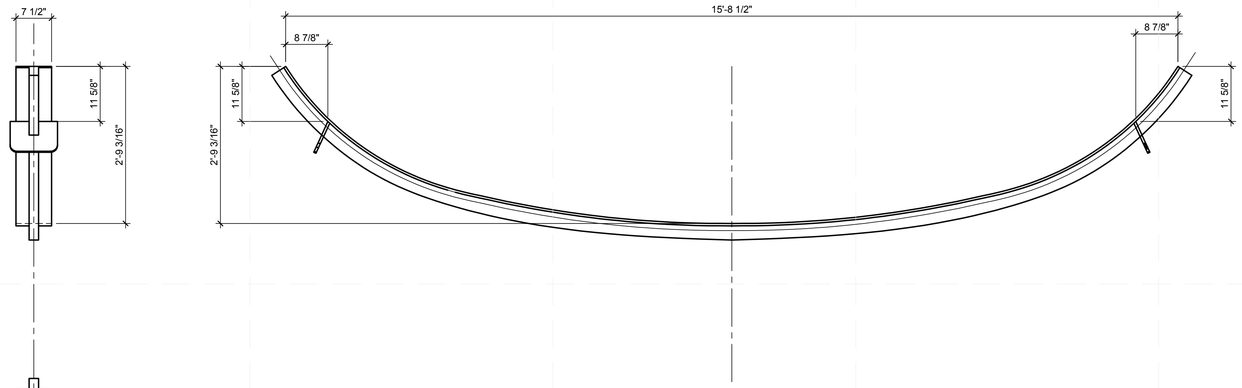

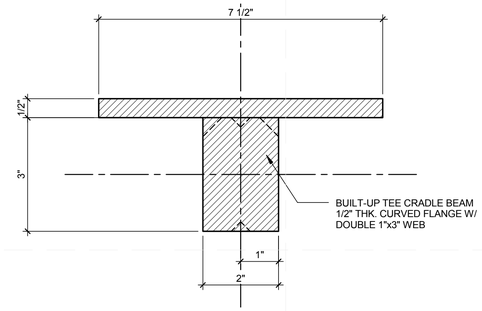

D6 TYPICAL CRADLE BEAM SECTION

6" = 1'-0"

0 1" 2" 3" 4"

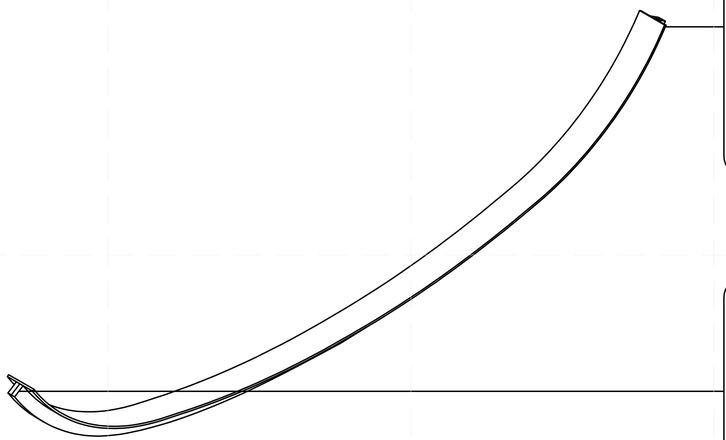

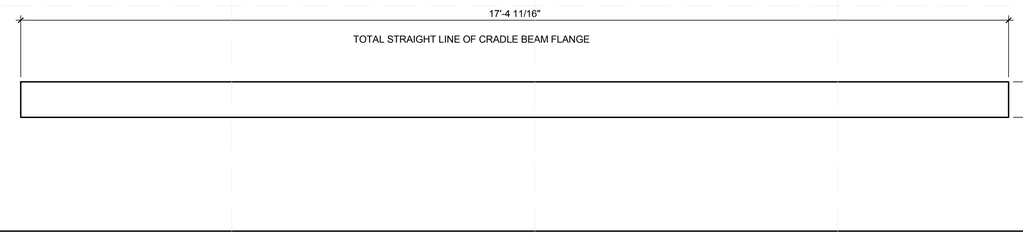

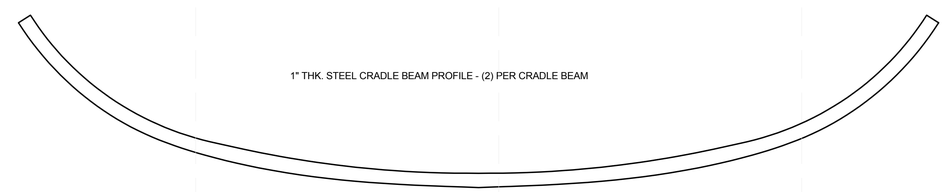

A1 TYICAL CRADLE BEAM PROFILE SECTIONS

3/4" = 1'-0"

0 1' 2' 3'

5/8/2011 5:33:01 PM

teamhawai'i

halepilihonua

TEAM NAME: UNIVERSITY OF HAWAII (TEAM HAWAII)

ADDRESS: UNIVERSITY OF HAWAI'I AT MĀNOA
2410 CAMPUS ROAD
HONOLULU, HI 96822

CONTACT: ROCKWOOD@ARCH.HAWAII.EDU
WWW.SOLAR.HAWAII.EDU

CONSULTANTS

ARCHITECTURE:

ENGINEERS:

LANDSCAPING:

CODE CONSULTANTS:

CLIENT

U.S. DEPARTMENT OF ENERGY

SOLAR DECATHLON 2011

WWW.SOLARDECATHLON.GOV

U.S. DEPARTMENT OF ENERGY SOLAR DECATHLON

MARK	DATE	DESCRIPTION

LOT NUMBER: 306

DRAWN BY: UNIVERSITY OF HAWAI'I

CHECKED BY: Checker

COPYRIGHT: UNIVERSITY OF HAWAI'I
SCHOOL OF ARCHITECTURE

SHEET TITLE

FOUNDATION DETAILS

S-544

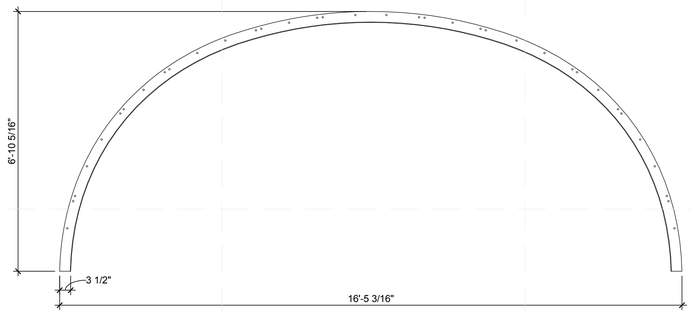

1/4" THK PLATE MIDDLE (UPPER INNER) 24EA

D1 UPPER INNER MID PLATE

1/2" = 1'-0"

0 1' 2' 4'

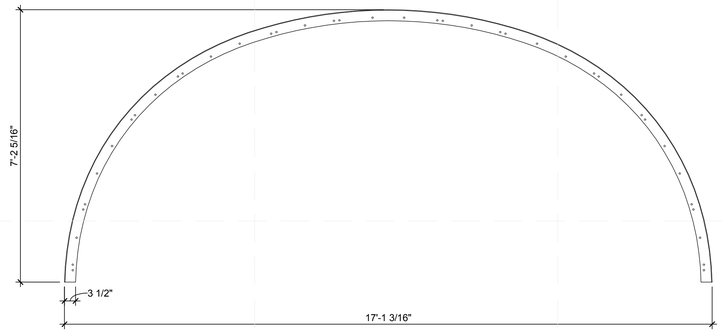

1/4" THK PLATE MIDDLE (UPPER OUTER) 24EA

D4 UPPER OUTER MID PLATE

1/2" = 1'-0"

0 1' 2' 4'

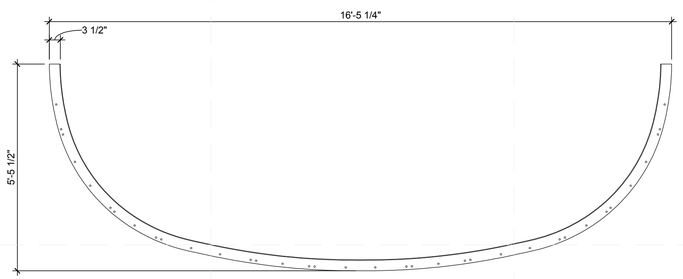

1/4" THK PLATE MIDDLE (LOWER INNER) 24EA

B1 LOWER INNER MID PLATE

1/2" = 1'-0"

0 1' 2' 4'

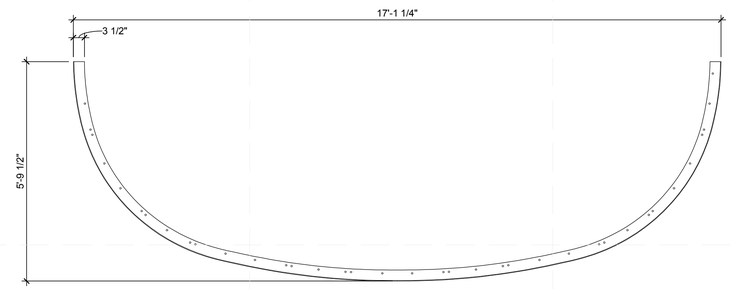

1/4" THK PLATE_MIDDLE (LOWER OUTER) 24EA

B4 LOWER OUTER MID PLATE

1/2" = 1'-0"

0 1' 2' 4'

5/9/2011 5:33:03 PM

teamhawai'i

halepilihonua

TEAM NAME:	UNIVERSITY OF HAWAII (TEAM HAWAII)
ADDRESS:	UNIVERSITY OF HAWAI'I AT MĀNOA 2410 CAMPUS ROAD HONOLULU, HI 96822
CONTACT:	ROCKWOOD@ARCH.HAWAII.EDU WWW.SOLAR.HAWAII.EDU

CONSULTANTS

ARCHITECTURE:

ENGINEERS:

LANDSCAPING:

CODE CONSULTANTS:

CLIENT

U.S. DEPARTMENT OF ENERGY

SOLAR DECATHLON 2011

WWW.SOLARDECATHLON.GOV

U.S. DEPARTMENT OF ENERGY SOLAR DECATHLON

MARK	DATE	DESCRIPTION

LOT NUMBER:	306
DRAWN BY:	UNIVERSITY OF HAWAI'I
CHECKED BY:	Checker
COPYRIGHT:	UNIVERSITY OF HAWAI'I SCHOOL OF ARCHITECTURE

SHEET TITLE

SHELL FRAMING DETAILS

S-550

teamhawai'i

halepilihonua

TEAM NAME:	UNIVERSITY OF HAWAII (TEAM HAWAII)
ADDRESS:	UNIVERSITY OF HAWAI'I AT MĀNOA 2410 CAMPUS ROAD HONOLULU, HI 96822
CONTACT:	ROCKWOOD@ARCH.HAWAII.EDU WWW.SOLAR.HAWAII.EDU

CONSULTANTS

ARCHITECTURE:

ENGINEERS:

LANDSCAPING:

CODE CONSULTANTS:

CLIENT

U.S. DEPARTMENT OF ENERGY

SOLAR DECATHLON 2011

WWW.SOLARDECATHLON.GOV

U.S. DEPARTMENT OF ENERGY SOLAR DECATHLON

MARK	DATE	DESCRIPTION

LOT NUMBER:	306
DRAWN BY:	UNIVERSITY OF HAWAI'I
CHECKED BY:	Checker
COPYRIGHT:	UNIVERSITY OF HAWAI'I SCHOOL OF ARCHITECTURE

SHEET TITLE

SHELL FRAMING DETAILS

S-551

5/8/2011 5:33:05 PM

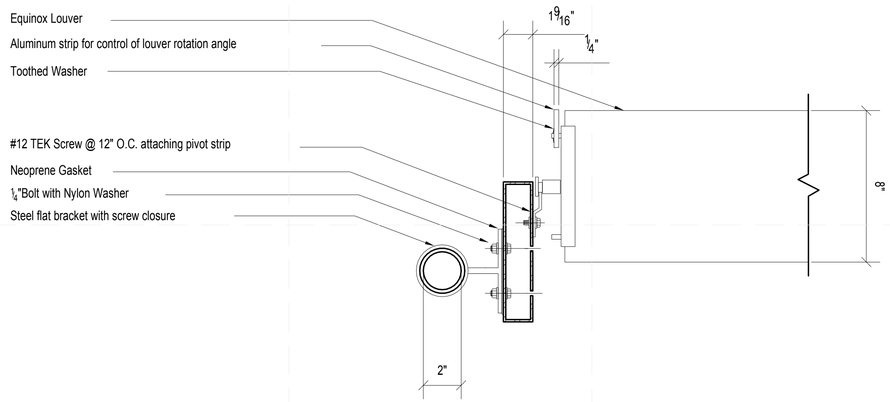

D1 LOUVER CONNECTION DETAIL

3" = 1'-0"

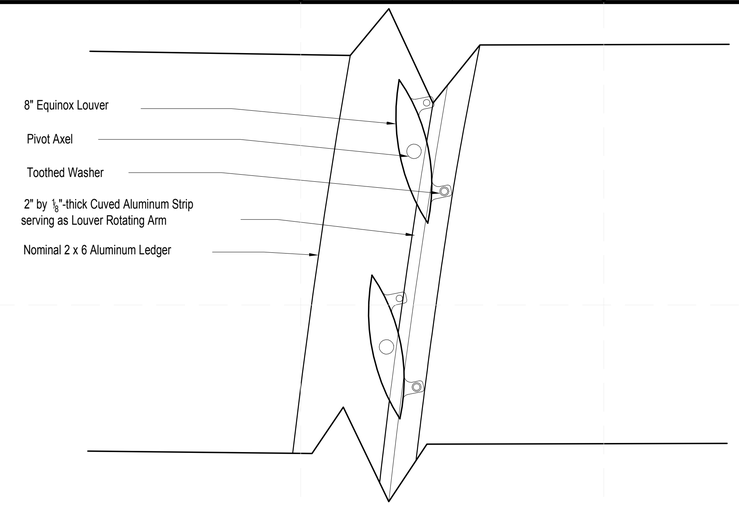

D4 LOUVER CONNECTION DETAIL 2

3" = 1'-0"

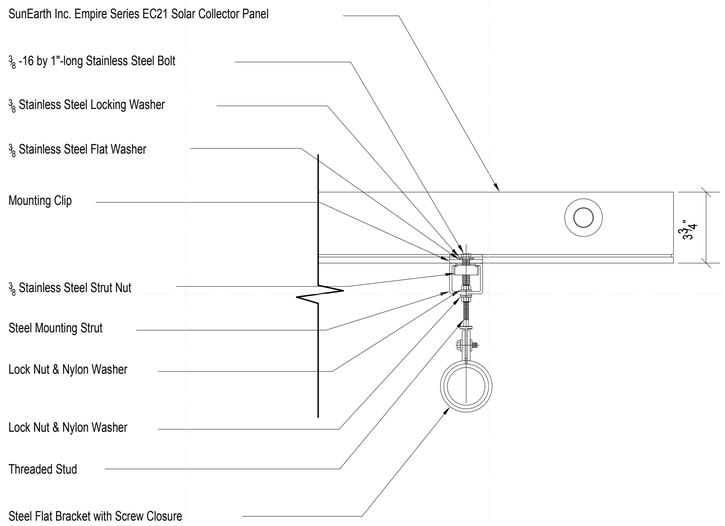

B1 SDHW PANEL CONNECTION DETAIL 1

3" = 1'-0"

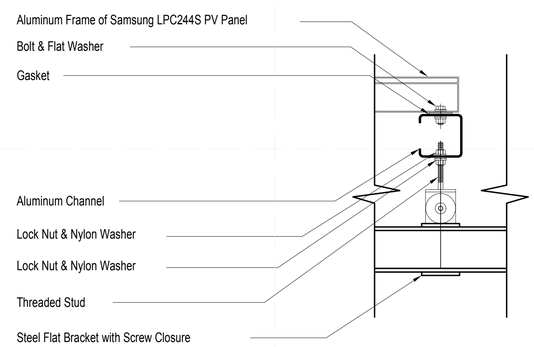

B5 PV PANEL MOUNTING DETAIL 1

3" = 1'-0"

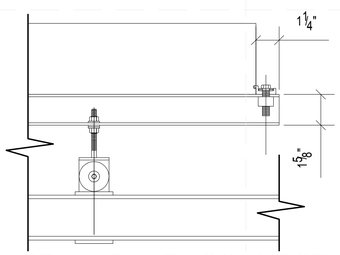

A1 SDHW PANEL CONNECTION DETAIL 2

3" = 1'-0"

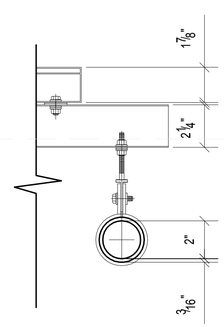

A4 PV PANEL MOUNTING DETAIL 2

3" = 1'-0"

GENERAL SHEET NOTES

REFERENCE KEYNOTES

SHEET KEYNOTES

teamhawai'i

halepilihonua

TEAM NAME:	UNIVERSITY OF HAWAII (TEAM HAWAII)
ADDRESS:	UNIVERSITY OF HAWAI'I AT MĀNOA 2410 CAMPUS ROAD HONOLULU, HI 96822
CONTACT:	ROCKWOOD@ARCH.HAWAII.EDU WWW.SOLAR.HAWAII.EDU

CONSULTANTS

ARCHITECTURE:

ENGINEERS:

LANDSCAPING:

CODE CONSULTANTS:

CLIENT

U.S. DEPARTMENT OF ENERGY

SOLAR DECATHLON 2011

WWW.SOLARDECATHLON.GOV

U.S. DEPARTMENT OF ENERGY SOLAR DECATHLON

MARK	DATE	DESCRIPTION

LOT NUMBER:	306
DRAWN BY:	UNIVERSITY OF HAWAI'I
CHECKED BY:	CHECKER
COPYRIGHT:	UNIVERSITY OF HAWAI'I SCHOOL OF ARCHITECTURE

SHEET TITLE

SUPERSTRUCTURE DETAILS

S-645

5/8/2011 5:33:09 PM

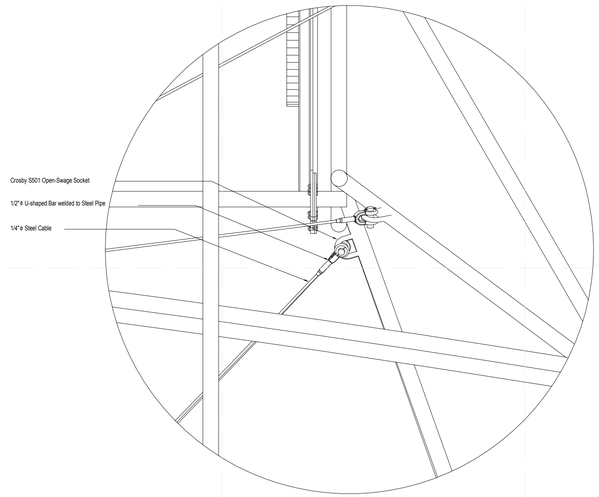

D1 CABLE CONNECTION DETAIL2
1 1/2" = 1'-0"
0 1/2" 1' 1 1/2'

D4 CABLE CONNECTION DETAIL1
1 1/2" = 1'-0"
0 1/2" 1' 1 1/2'

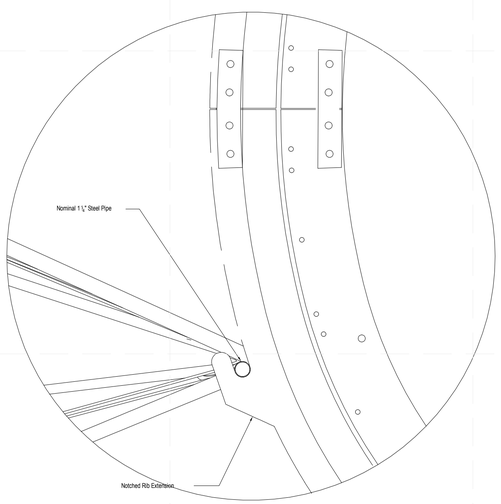

A1 SUPERSTRUCTURE-RIB CONNECTION 1
1 1/2" = 1'-0"
0 1/2" 1' 1 1/2'

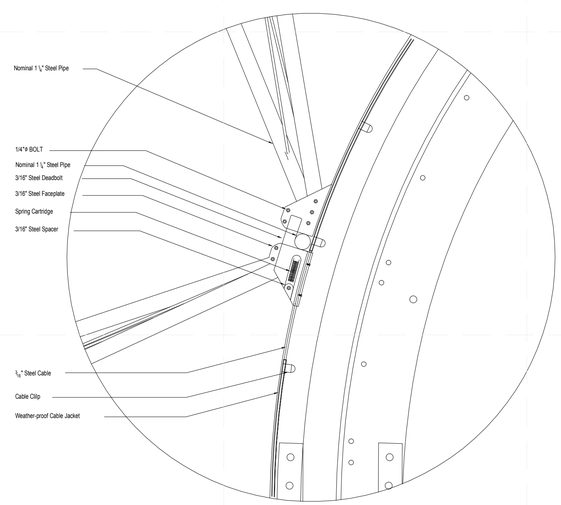

A4 SUPERSTRUCTURE-RIB CONNECTION 2
1 1/2" = 1'-0"
0 1/2" 1' 1 1/2'

5/6/2011 5:33:13 PM

teamhawai'i
halepilihonua

TEAM NAME: UNIVERSITY OF HAWAII (TEAM HAWAII)
ADDRESS: UNIVERSITY OF HAWAI'I AT MĀNOA
2410 CAMPUS ROAD
HONOLULU, HI 96822
CONTACT: ROCKWOOD@ARCH.HAWAII.EDU
WWW.SOLAR.HAWAII.EDU

CONSULTANTS
ARCHITECTURE:
ENGINEERS:
LANDSCAPING:
CODE CONSULTANTS:

CLIENT
U.S. DEPARTMENT OF ENERGY
SOLAR DECATHLON 2011
WWW.SOLARDECATHLON.GOV

U.S. DEPARTMENT OF ENERGY
SOLAR DECATHLON

MARK	DATE	DESCRIPTION

LOT NUMBER: 306
DRAWN BY: UNIVERSITY OF HAWAI'I
CHECKED BY: Checker
COPYRIGHT: UNIVERSITY OF HAWAI'I
SCHOOL OF ARCHITECTURE

SHEET TITLE
SUPERSTRUCTURE DETAILS

S-646

GENERAL SHEET NOTES

1. GENERAL SHEET NOTES
2. GENERAL SHEET NOTES 2
3. GENERAL SHEET NOTES 3
4. GENERAL SHEET NOTES 4
5. GENERAL SHEET NOTES 5FA FDAFDAFDASF D FDASDFSAFDASFDAS FA FAF
6. GENERAL SHEET NOTES 6
7. GENERAL SHEET NOTES 7
8. GENERAL SHEET NOTES 8

REFERENCE KEYNOTES

SHEET KEYNOTES

teamhawai'i

halepilihonua

TEAM NAME: UNIVERSITY OF HAWAII (TEAM HAWAII)

ADDRESS: UNIVERSITY OF HAWAI'I AT MĀNOA
2410 CAMPUS ROAD
HONOLULU, HI 96822

CONTACT: ROCKWOOD@ARCH.HAWAII.EDU
WWW.SOLAR.HAWAII.EDU

CONSULTANTS

ARCHITECTURE:

ENGINEERS:

LANDSCAPING:

CODE CONSULTANTS:

CLIENT

U.S. DEPARTMENT OF ENERGY

SOLAR DECATHLON 2011

WWW.SOLARDECATHLON.GOV

U.S. DEPARTMENT OF ENERGY SOLAR DECATHLON

MARK	DATE	DESCRIPTION

LOT NUMBER:	306
DRAWN BY:	UNIVERSITY OF HAWAI'I
CHECKED BY:	CHECKER
COPYRIGHT:	UNIVERSITY OF HAWAI'I SCHOOL OF ARCHITECTURE

SHEET TITLE

REINFORCING AND FRAMING SCHEDULES

S-701

5/8/2011 5:33:16 PM

teamhawai'i

halepilihonua

TEAM NAME:	UNIVERSITY OF HAWAII (TEAM HAWAII)
ADDRESS:	UNIVERSITY OF HAWAI'I AT MĀNOA 2410 CAMPUS ROAD HONOLULU, HI 96822
CONTACT:	ROCKWOOD@ARCH.HAWAII.EDU WWW.SOLAR.HAWAII.EDU

CONSULTANTS

ARCHITECTURE:

ENGINEERS:

LANDSCAPING:

CODE CONSULTANTS:

CLIENT

U.S. DEPARTMENT OF ENERGY

SOLAR DECATHLON 2011

WWW.SOLARDECATHLON.GOV

U.S. DEPARTMENT OF ENERGY SOLAR DECATHLON

MARK	DATE	DESCRIPTION

LOT NUMBER:	306
DRAWN BY:	UNIVERSITY OF HAWAI'I
CHECKED BY:	CHECKER
COPYRIGHT:	UNIVERSITY OF HAWAI'I SCHOOL OF ARCHITECTURE

SHEET TITLE

COLUMNN AND BEAM SCHEDULES

S-702

5/6/2011 5:33:18 PM

GENERAL SHEET NOTES

1. GENERAL SHEET NOTES
2. GENERAL SHEET NOTES 2
3. GENERAL SHEET NOTES 3
4. GENERAL SHEET NOTES 4
5. GENERAL SHEET NOTES 5FA FDAFDAFDASF D FDASDFSAFDASFDAS FA FAF
6. GENERAL SHEET NOTES 6
7. GENERAL SHEET NOTES 7
8. GENERAL SHEET NOTES 8

REFERENCE KEYNOTES

SHEET KEYNOTES

teamhawai'i

halepilihonua

TEAM NAME:	UNIVERSITY OF HAWAII (TEAM HAWAII)
ADDRESS:	UNIVERSITY OF HAWAI'I AT MĀNOA 2410 CAMPUS ROAD HONOLULU, HI 96822
CONTACT:	ROCKWOOD@ARCH.HAWAII.EDU WWW.SOLAR.HAWAII.EDU

CONSULTANTS

ARCHITECTURE:

ENGINEERS:

LANDSCAPING:

CODE CONSULTANTS:

CLIENT

U.S. DEPARTMENT OF ENERGY

SOLAR DECATHLON 2011

WWW.SOLARDECATHLON.GOV

U.S. DEPARTMENT OF ENERGY SOLAR DECATHLON

MARK	DATE	DESCRIPTION

LOT NUMBER:	306
DRAWN BY:	UNIVERSITY OF HAWAI'I
CHECKED BY:	CHECKER
COPYRIGHT:	UNIVERSITY OF HAWAI'I SCHOOL OF ARCHITECTURE

SHEET TITLE

LOAD DIAGRAMS

S-711

5/8/2011 5:33:22 PM

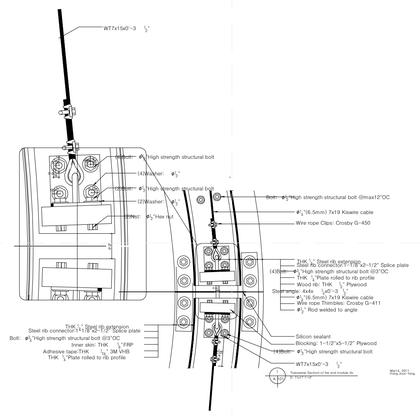

D1 SHELL HALVES CONNECTION DETAIL

1" = 1'-0"

0 1" 2"

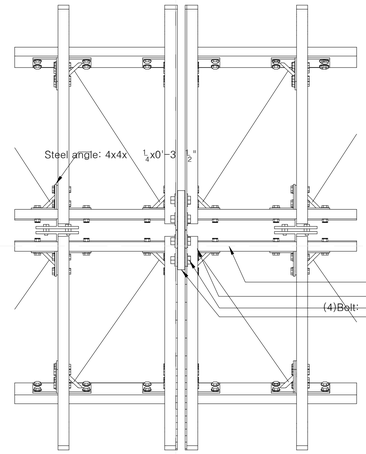

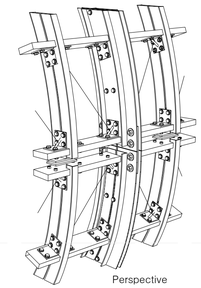

Perspective

D3 SHELL ELEVATION DETAIL

1" = 1'-0"

0 1" 2"

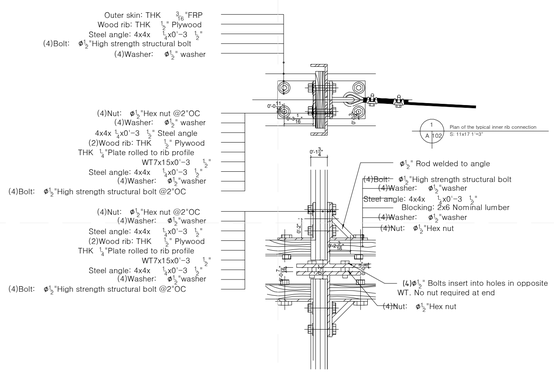

B1 SHELL STRUCTURE INNER RIB DETAIL

1 1/2" = 1'-0"

0 1" 2"

GENERAL SHEET NOTES

REFERENCE KEYNOTES

SHEET KEYNOTES

teamhawai'i

halepilihonua

TEAM NAME:	UNIVERSITY OF HAWAII (TEAM HAWAII)
ADDRESS:	UNIVERSITY OF HAWAI'I AT MĀNOA 2410 CAMPUS ROAD HONOLULU, HI 96822
CONTACT:	ROCKWOOD@ARCH.HAWAII.EDU WWW.SOLAR.HAWAII.EDU

CONSULTANTS

ARCHITECTURE:

ENGINEERS:

LANDSCAPING:

CODE CONSULTANTS:

CLIENT

U.S. DEPARTMENT OF ENERGY

SOLAR DECATHLON 2011

WWW.SOLARDECATHLON.GOV

U.S. DEPARTMENT OF ENERGY SOLAR DECATHLON

MARK	DATE	DESCRIPTION

LOT NUMBER:	306
DRAWN BY:	UNIVERSITY OF HAWAI'I
CHECKED BY:	CHECKER
COPYRIGHT:	UNIVERSITY OF HAWAI'I SCHOOL OF ARCHITECTURE

SHEET TITLE

TYPICAL DETAILS

S-801

5/9/2011 5:33:34 PM

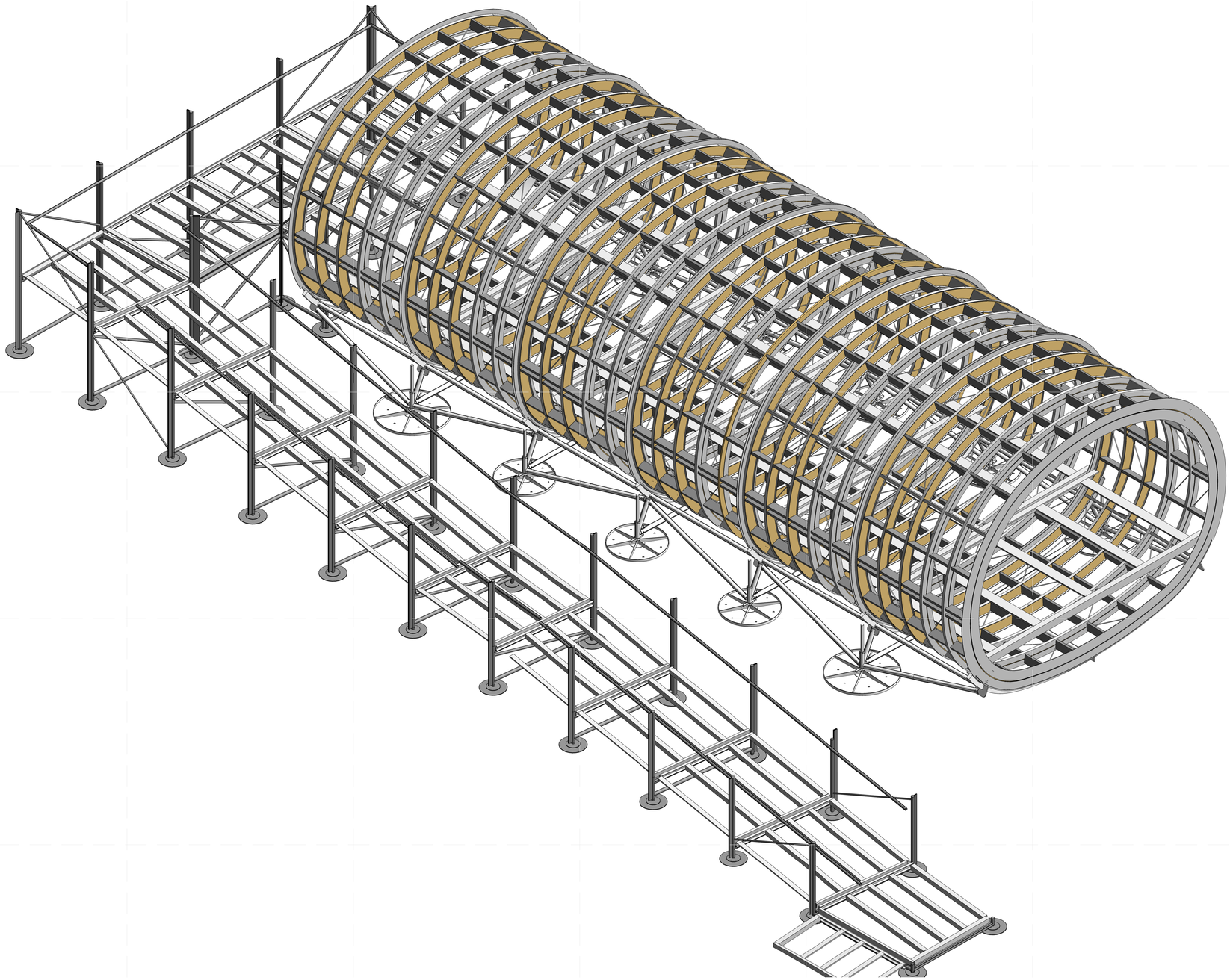

A1 FRAMING ISOMETRICS

5/8/2011 5:35:36 PM

GENERAL SHEET NOTES

1. GENERAL SHEET NOTES
2. GENERAL SHEET NOTES 2
3. GENERAL SHEET NOTES 3
4. GENERAL SHEET NOTES 4
5. GENERAL SHEET NOTES 5FA FDAFDAFDASF D FDASDFSAFDASFDAS FA FAF
6. GENERAL SHEET NOTES 6
7. GENERAL SHEET NOTES 7
8. GENERAL SHEET NOTES 8

REFERENCE KEYNOTES

SHEET KEYNOTES

teamhawai'i

halepilihonua

TEAM NAME:	UNIVERSITY OF HAWAII (TEAM HAWAII)
ADDRESS:	UNIVERSITY OF HAWAI'I AT MĀNOA 2410 CAMPUS ROAD HONOLULU, HI 96822
CONTACT:	ROCKWOOD@ARCH.HAWAII.EDU WWW.SOLAR.HAWAII.EDU

CONSULTANTS

ARCHITECTURE:

ENGINEERS:

LANDSCAPING:

CODE CONSULTANTS:

CLIENT

U.S. DEPARTMENT OF ENERGY

SOLAR DECATHLON 2011

WWW.SOLARDECATHLON.GOV

U.S. DEPARTMENT OF ENERGY SOLAR DECATHLON

MARK	DATE	DESCRIPTION

LOT NUMBER:	306
DRAWN BY:	UNIVERSITY OF HAWAI'I
CHECKED BY:	CHECKER
COPYRIGHT:	UNIVERSITY OF HAWAI'I SCHOOL OF ARCHITECTURE

SHEET TITLE

FRAMING ISOMETRICS

S-901

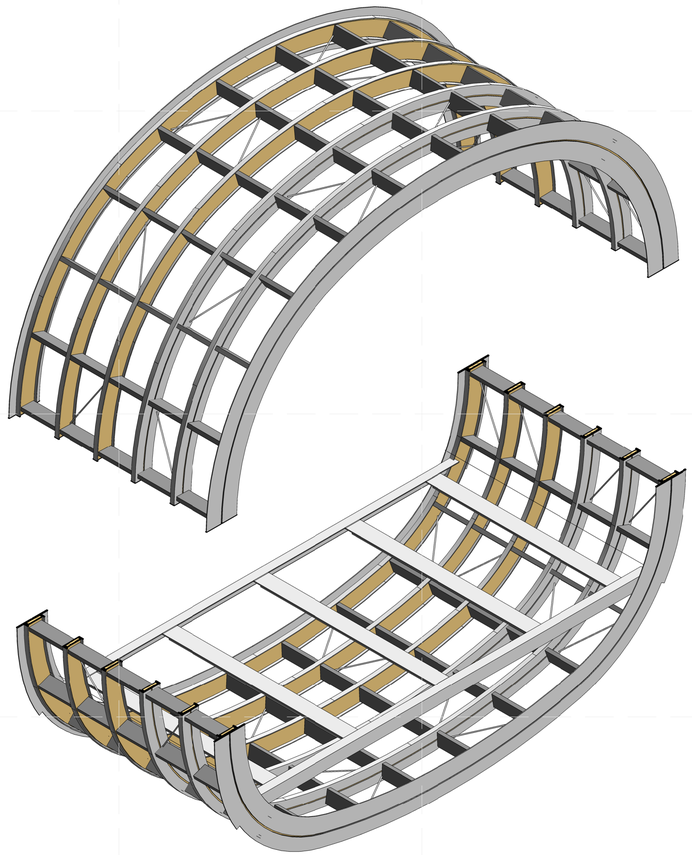

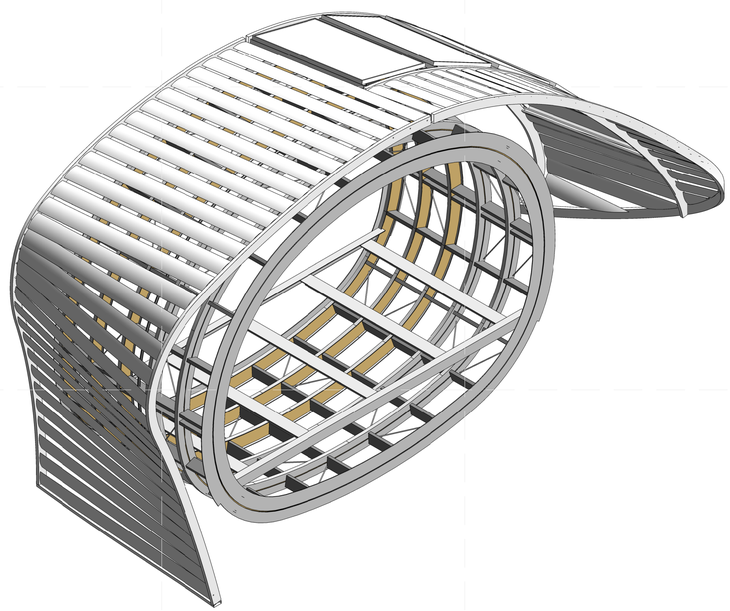

A1 SHELL FRAMING DIAGRAM

GENERAL SHEET NOTES

REFERENCE KEYNOTES

SHEET KEYNOTES

teamhawai'i

halepilihonua

TEAM NAME:	UNIVERSITY OF HAWAII (TEAM HAWAII)
ADDRESS:	UNIVERSITY OF HAWAI'I AT MĀNOA 2410 CAMPUS ROAD HONOLULU, HI 96822
CONTACT:	ROCKWOOD@ARCH.HAWAII.EDU WWW.SOLAR.HAWAII.EDU

CONSULTANTS

ARCHITECTURE:

ENGINEERS:

LANDSCAPING:

CODE CONSULTANTS:

CLIENT

U.S. DEPARTMENT OF ENERGY

SOLAR DECATHLON 2011

WWW.SOLARDECATHLON.GOV

U.S. DEPARTMENT OF ENERGY SOLAR DECATHLON

MARK	DATE	DESCRIPTION

LOT NUMBER:	306
DRAWN BY:	UNIVERSITY OF HAWAI'I
CHECKED BY:	Checker
COPYRIGHT:	UNIVERSITY OF HAWAI'I SCHOOL OF ARCHITECTURE

SHEET TITLE

MODULE DIAGRAM

S-903

5/8/2011 5:36:39 PM

GENERAL STRUCTURAL NOTES

DESIGN CRITERIA

1. STRUCTURAL DESIGN IS IN ACCORDANCE WITH THE 2009 INTERNATIONAL BUILDING CODE (IBC), AS MODIFIED BY THE SOLAR DECATHLON BUILDING CODE, DATED MARCH 26, 2010.

2. DEAD LOADS: BASED ON ACTUAL WEIGHT OF THE STRUCTURE, SOLAR PANELS AND EQUIPMENT.
   A. NO SINGLE PIECE OF EQUIPMENT SHALL EXCEED 13,000 LB. OPERATING WEIGHT.
   B. SOLAR PANELS, INCLUDING THEIR ALUMINUM FRAMES, SHALL NOT EXCEED 3 PSF UNIT WEIGHT.

3. LIVE LOADS:
   A. TYPICAL RESIDENTIAL FLOOR LIVE LOAD: 40 PSF
   B. LIVE LOAD ON APPROACH RAMP: 100 PSF
   C. LIVE LOAD ON ROOF: 20 PSF

4. WIND LOAD:
   A. DESIGN WIND SPEED: 60 MPH
   B. IMPORTANCE FACTOR (IW): 1.0
   C. EXPOSURE CATEGORY: C

5. SEISMIC LOAD: NOT CONSIDERED IN THE DESIGN FOR THIS INSTALLATION.

6. FOUNDATION DESIGN CRITERIA:
   A. ALLOWABLE SOIL BEARING: 1500 PSF
   B. COEFFICIENT OF FRICTION FOR SLIDING RESISTANCE: 0.25
   C. OVERTURNING FACTOR OF SAFETY: 2.0

STRUCTURAL PLYWOOD

1. MATERIAL SHALL CONFORM TO "SOFTWOOD PLYWOOD-CONSTRUCTION AND INDUSTRIAL," PRODUCT STANDARD PS 1- 83 OF U.S. DEPARTMENT OF COMMERCE, BUREAU OF STANDARDS.

2. FIRE TREATMENT PER THE FOLLOWING STANDARD: "PLYWOOD - FIRE RETARDANT TREATMENT BY PRESSURE PROCESS" (AWPA C27□74).

3. PLYWOOD SHALL BE MANUFACTURED IN ACCORDANCE WITH AMERICAN PLYWOOD ASSOCIATION STANDARDS WITH EACH SHEET GRADE MARKED.

4. ALL PLYWOOD SHALL HAVE A MINIMUM OF 5 PLIES.

5. PLYWOOD SHALL BE C-D STRUCTURAL I WITH EXTERIOR GLUE AND SHALL BE ½-INCH THICK MINIMUM. WHERE PLYWOOD THICKNESS IS BUILT UP FROM MULTIPLE SHEETS, ADJACENT SHEETS SHALL BE GLUED TOGETHER.

6. HOLES FOR BOLTS SHALL NOT BE MORE THAN 1/16-INCH LARGER THAN BOLT DIAMETER, UNLESS NOTED OTHERWISE.

STRUCTURAL STEEL WORK

1. STRUCTURAL STEEL SHAPES AND PLATES SHALL CONFORM TO ASTM A36. STEEL PIPE SECTIONS SHALL CONFORM TO ASTM A53 TYPE E OR S (WELDED OR SEAMLESS), GRADE B (FY = 35KSI) OR ASTM A501 (FY = 35KSI).

2. THREADED ROD SHALL CONFORM TO ASTM A36.

3. STRUCTURAL STEEL SHALL BE FABRICATED IN ACCORDANCE WITH AISC SPECIFICATIONS, AISC CODE OFSTANDARD PRACTICE, AND AWS D1.1.

4. BOLT HOLES SHALL BE DRILLED OR PUNCHED AT RIGHT ANGLES TO THE SURFACE OF THE METAL. BOLT HOLESSHALL NOT BE MORE THAN 1/16-INCH LARGER THAN BOLT DIAMETER, UNLESS NOTED OTHERWISE.

5. INTERIOR PRIMER PAINT:
   A. SSPC PAINT SPECIFICATION NO. 13; CONFORMING TO FEDERAL, STATE, AND LOCAL VOC REGULATORS; CONTAINING NO LEAD OR CHROMATES.
   B. AFTER FABRICATION, PREPARE STEEL SURFACES TO RECEIVE INTERIOR PRIMER IN ACCORDANCE WITH THE SSPC-SP3 "POWER TOOL CLEANING".
   C. APPLY INTERIOR PRIMER AT 2.0 MILS MINIMUM DRY FILM THICKNESS.

6. EXTERIOR PRIMER PAINT:
   A. SSPC PAINT SPECIFICATION NO. 20 ZINC-RICH PRIMER.
   B. AFTER FABRICATION, PREPARE STEEL SURFACES TO RECEIVE EXTERIOR PRIMER IN ACCORDANCE WITH THE SSPC-SP6 "COMMERCIAL BLAST CLEANING".
   C. APPLY EXTERIOR PRIMER AT 3.0 MILS MINIMUM DRY FILM THICKNESS.

7. ALL STEEL SURFACES SHALL BE CLEANED PER SSPC-SP1 "SOLVENT CLEANING" TO REMOVE OIL AND GREASE PRIOR TO ANY OTHER SURFACE PREPARATION. EASE ALLCORNERS OF PLATES AND SHAPES TO RECEIVE EXTERIOIPRIMER TO 1/16-INCH MINIMUM CHAMFER.

STRUCTURAL BOLTING

1. TYPICAL BOLTS SHALL CONFORM TO ASTM A307, GRADE A REGULAR LOW-CARBON STEEL BOLTS AND NUTS. PROVIDE HEXAGONAL HEAD BOLT HEADS AND SELF-LOCKING NUTS.

2. WHERE SPECIFIED IN DRAWINGS, ASTM A325 BOLTS SHALL BE USED. PROVIDE HEXAGONAL HEAD BOLT HEADS AND SELF- LOCKING NUTS.

3. BOLTS, NUTS AND WASHERS TO BE EXPOSED TO THE ELEMENTS IN THE FINAL STRUCTURE SHALL BE HOT-DIP GALVANIZED. GALVANIZE BOLTS, NUTS AND WASHERS IN ACCORDANCE WITH ASTM A153. TOUCH UP GALVANIZED SURFACES IN ACCORDANCE WITH ASTM A780.

4. BOLTS SHALL BE BROUGHT TO A SNUG TIGHT CONDITION.

5. BOLTS SHALL BE OF A LENGTH THAT WILL EXTEND ENTIRELY THROUGH BUT NOT MORE THAT ¼-INCH BEYONTHE NUT. WASHERS SHALL BE USED ON ALL BOLTS.

STRUCTURAL WELDING

1. ALL WELDING SHALL COMPLY WITH AISC SPECIFICATIONS AND AWS D1.1.

2. WELDING MATERIAL: FILLER METAL REQUIREMENTS SHALL CONFORM TO AWS D1.1 AND AISC "SPECIFICATION FOR STRUCTURAL STEEL BUILDINGS". MINIMUM CLASSIFIED TENSILE STRENGTH OF 70 KSI (E70). USE LOW HYDROGEN ELECTRODES AS DEFINED BY AWS D1.1.

STRUCTURAL CABLE

1. STRUCTURAL CABLE SHALL BE 7X19 CABLE CONFORMING TO AMERICAN STANDARD "MIL-W-1511A GALVANIZED AIRCRAFT CABLE."

2. CABLE END CONNECTIONS SHALL DEVELOP THE FULL BREAKING STRENGTH OF THE CABLE.

3. THIMBLES SHALL BE INSTALLED AT ALL 180-DEGREE BENDS. THE CABLE SHALL BE CLIPPED TO ITSELF IMMEDIATELY BEYOND THE THIMBLE.

4. WHERE CABLES ARE CLIPPED, THE DEAD END SHALL BE CLIPPED TO THE LIVE END BY AT LEAST TWO CLIPS, AND SHALL OVERLAP BY AT LEAST 4 ¾", OR AS REQUIRED BY THE CLIP MANUFACTURER.

5. CABLE END SPLICES SHALL USE AT LEAST FOUR CLIPS AND INCLUDE AN OVERLAP OF AT LEAST 9 ½", OR AS REQUIRED BY THE CLIP MANUFACTURER.

teamhawai'i

halepilihonua

TEAM NAME: UNIVERSITY OF HAWAII (TEAM HAWAII)
ADDRESS: UNIVERSITY OF HAWAII AT MĀNOA
2410 CAMPUS ROAD
HONOLULU, HI 96822
CONTACT: ROCKWOOD@ARCH.HAWAII.EDU
WWW.SOLAR.HAWAII.EDU

CONSULTANTS

ARCHITECTURE:

ENGINEERS:

LANDSCAPING:

CODE CONSULTANTS:

CLIENT

U.S. DEPARTMENT OF ENERGY
SOLAR DECATHLON 2011
WWW.SOLARDECATHLON.GOV

U.S. DEPARTMENT OF ENERGY SOLAR DECATHLON

MARK	DATE	DESCRIPTION

LOT NUMBER: 306

DRAWN BY: UNIVERSITY OF HAWAI'I

CHECKED BY: CHECKER

COPYRIGHT: UNIVERSITY OF HAWAI'I SCHOOL OF ARCHITECTURE

SHEET TITLE

STRUCTURAL NOTES AND SYMBOLS

S-001

3/21/2011 1:18:45 PM

PRODUCED BY AN AUTODESK EDUCATIONAL PRODUCT

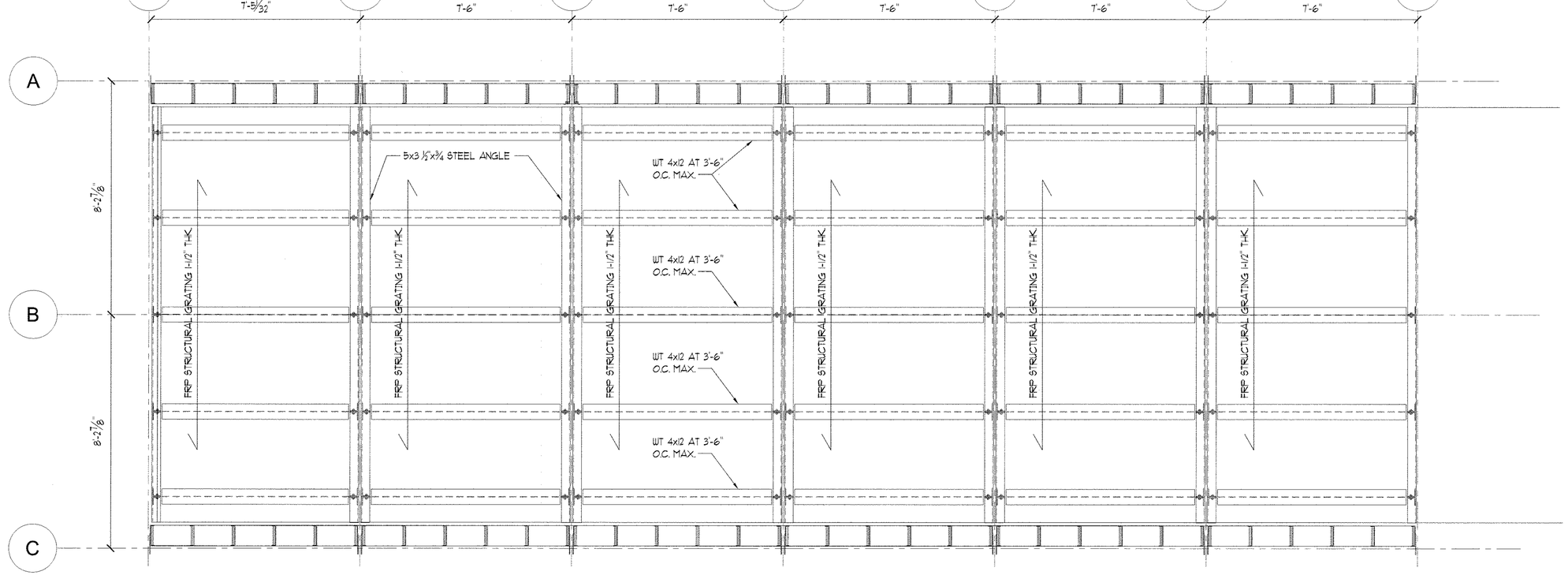

A1 FLOOR FRAMING PLAN

1/2" = 1' - 0"

HALE PILIHONUA

TEAM NAME:

ADDRESS:

CONTACT:

CONSULTANTS

ARCHITECTURE:

ENGINEERS:

LANDSCAPING:

SAFETY FIRST CODE CONSULTANTS:

CLIENT

U.S. DEPARTMENT OF ENERGY

SOLAR DECATHLON 2011

WWW.SOLARDECATHLON.GOV

LOT NUMBER:

DRAWN BY: UNIVERSITY OF HAWAI'I

CHECKED BY:

COPYRIGHT: UNIVERSITY OF HAWAI'I SCHOOL OF ARCHITECTURE

SHEET TITLE

FIRST FLOOR FRAMING PLAN

S-102

PRODUCED BY AN AUTODESK EDUCATIONAL PRODUCT

PRODUCED BY AN AUTODESK EDUCATIONAL PRODUCT

PRODUCED BY AN AUTODESK EDUCATIONAL PRODUCT

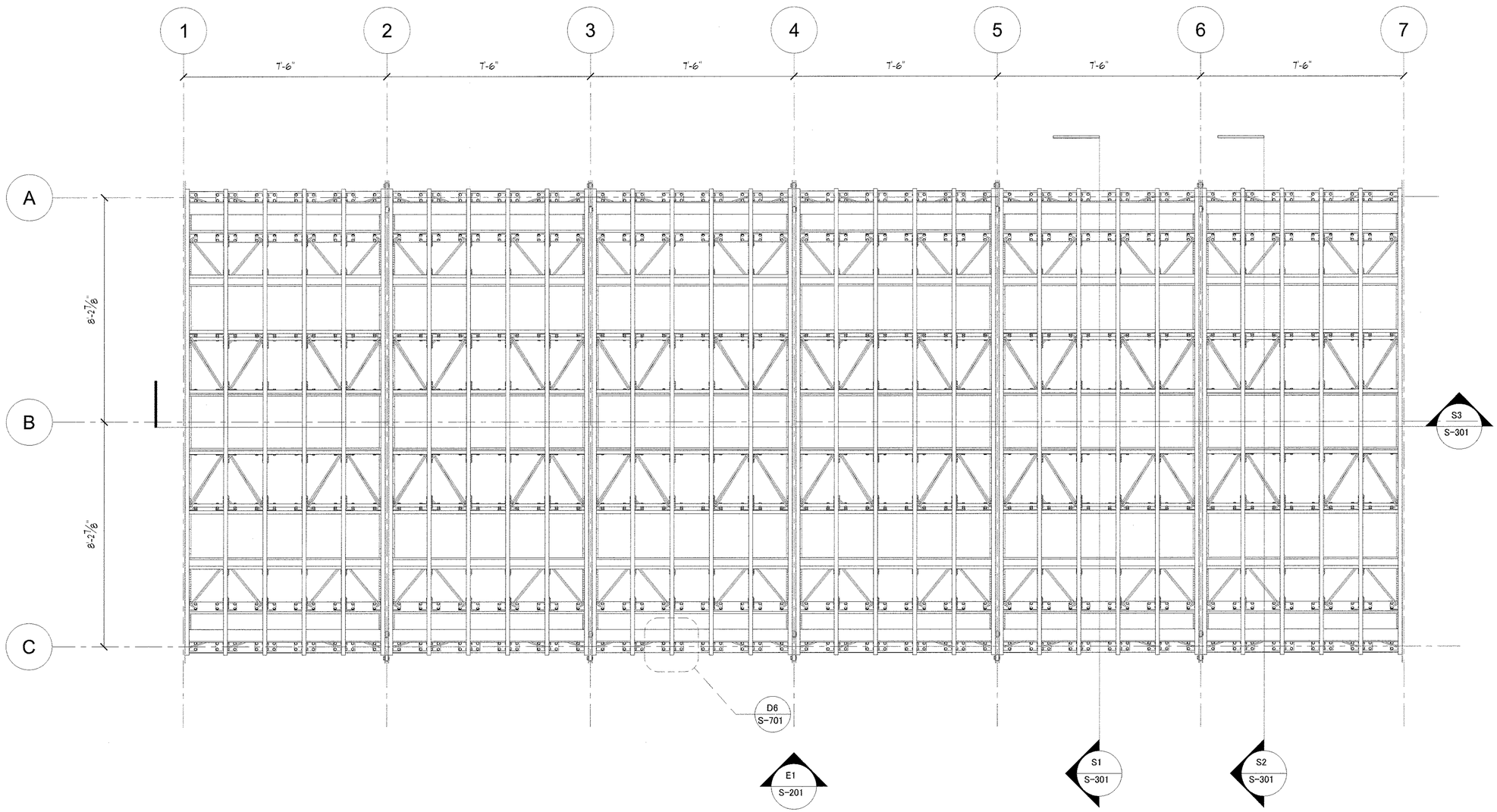

A1 ROOF FRAMING PLAN

½" = 1' - 0"

HALE PILIHONUA

TEAM NAME:
ADDRESS:
CONTACT:

CONSULTANTS
ARCHITECTURE:
ENGINEERS:
LANDSCAPING:
SAFETY FIRST CODE CONSULTANTS:

CLIENT
U.S. DEPARTMENT OF ENERGY
SOLAR DECATHLON 2011
WWW.SOLARDECATHLON.GOV

LOT NUMBER:
DRAWN BY: UNIVERSITY OF HAWAI'I
CHECKED BY:
COPYRIGHT: UNIVERSITY OF HAWAI'I SCHOOL OF ARCHITECTURE

SHEET TITLE
ROOF FRAMING PLAN

S-103

PRODUCED BY AN AUTODESK EDUCATIONAL PRODUCT
PRODUCED BY AN AUTODESK EDUCATIONAL PRODUCT

PRODUCED BY AN AUTODESK EDUCATIONAL PRODUCT

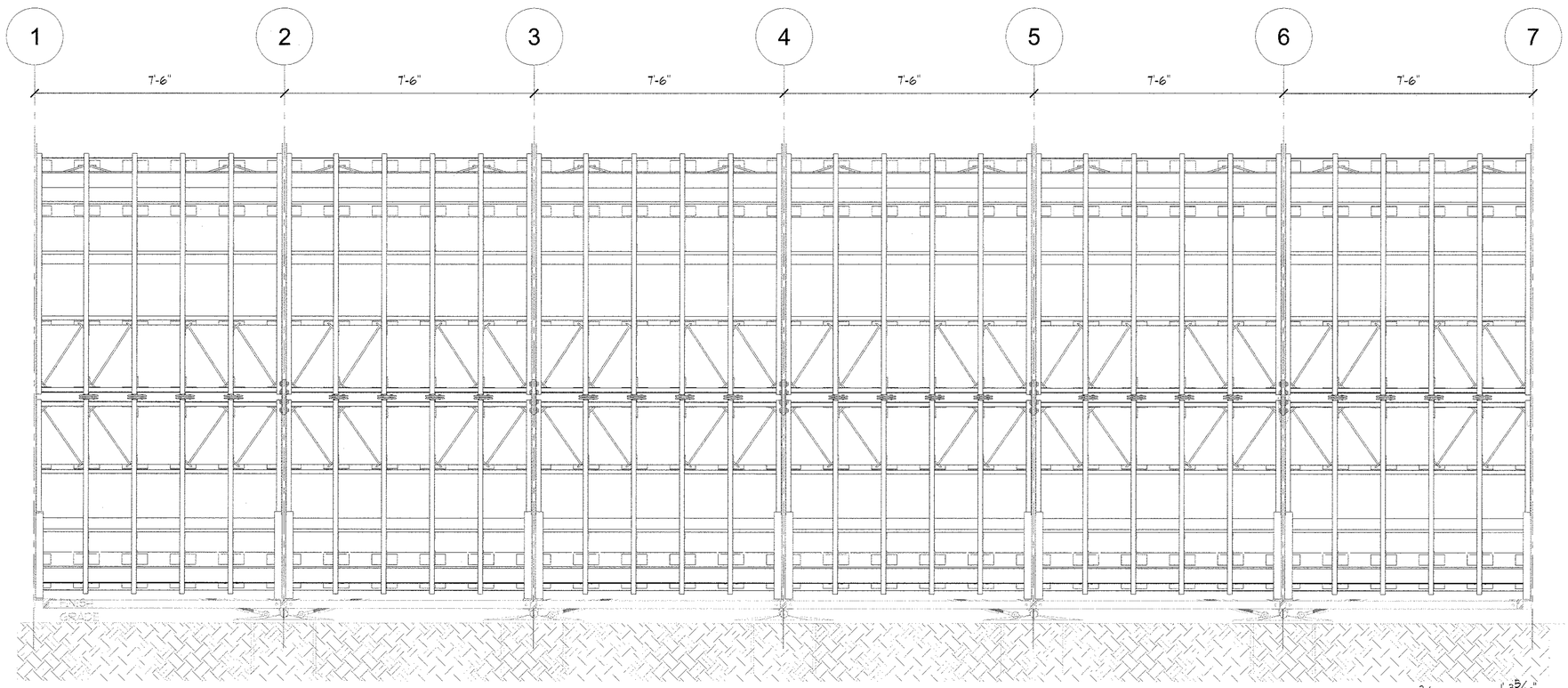

A1 FRAMING SOUTH ELEVATION

½" = 1' - 0"

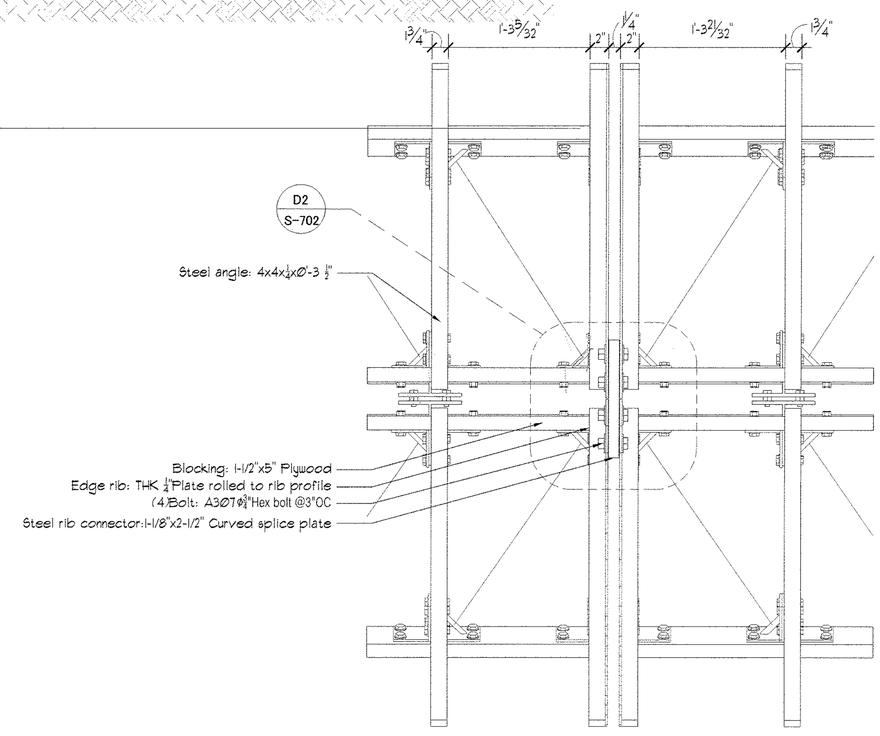

E2 MAJOR RIB ELEVATION DETAIL

1 ½" = 1' - 0"

HALE PILIHONUA

TEAM NAME:

ADDRESS:

CONTACT:

CONSULTANTS

ARCHITECTURE:

ENGINEERS:

LANDSCAPING:

SAFETY FIRST CODE CONSULTANTS:

REGISTERED PROFESSIONAL ENGINEER JOHN A. WORLEY S 3409 EXP. 03/31/11 STRUCTURAL STATE OF CALIFORNIA

CLIENT

U.S. DEPARTMENT OF ENERGY

SOLAR DECATHLON 2011

WWW.SOLARDECATHLON.GOV

LOT NUMBER:

DRAWN BY: UNIVERSITY OF HAWAI'I

CHECKED BY:

COPYRIGHT: UNIVERSITY OF HAWAI'I SCHOOL OF ARCHITECTURE

SHEET TITLE

FRAMING ELEVATIONS

S-201

PRODUCED BY AN AUTODESK EDUCATIONAL PRODUCT

PRODUCED BY AN AUTODESK EDUCATIONAL PRODUCT

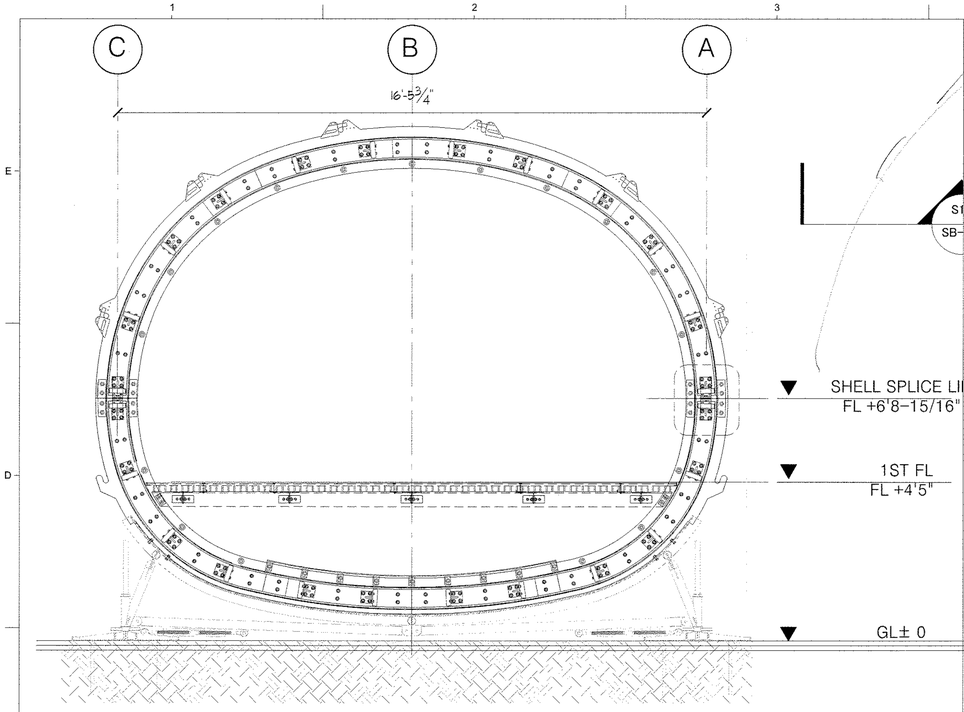

S1 TRANSVERSE FRAMING SECTION

½" = 1' - 0"

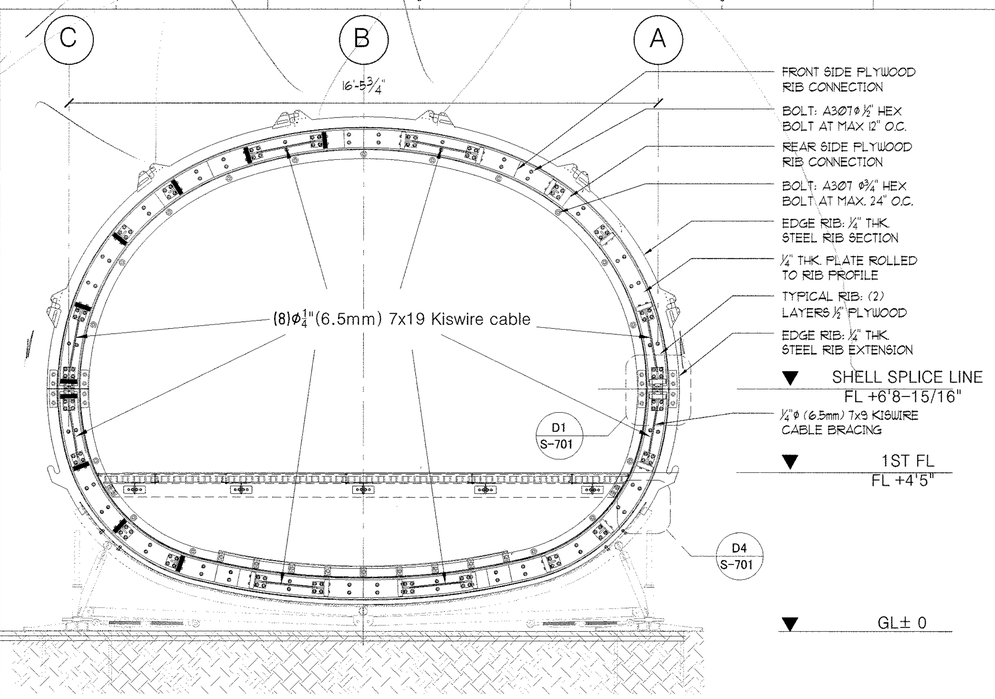

S2 TRANSVERSE FRAMING SECTION AT BRACING

½" = 1' - 0"

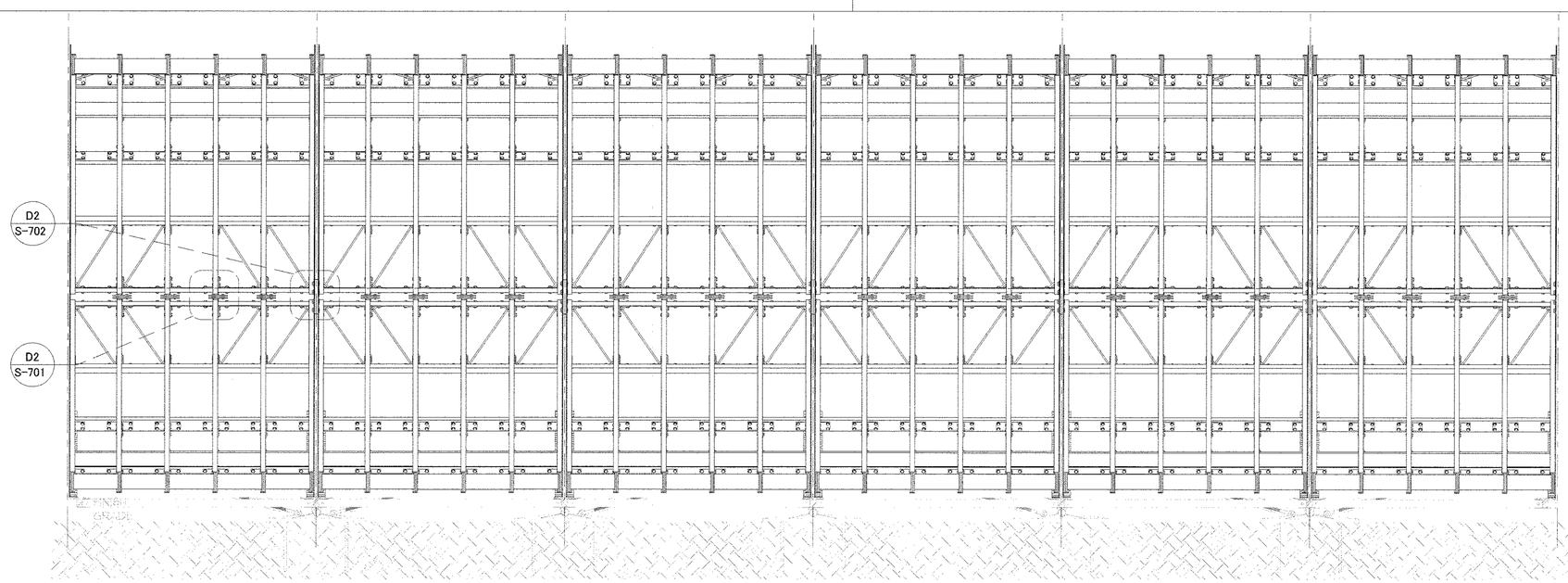

S3 FRAMING LONGITUDINAL SECTION

½" = 1' - 0"

HALE PILIHONUA

TEAM NAME:

ADDRESS:

CONTACT:

CONSULTANTS

ARCHITECTURE:

ENGINEERS:

LANDSCAPING:

SAFETY FIRST CODE CONSULTANTS:

REGISTERED PROFESSIONAL ENGINEER
JOHN A. WORLEY
S 3478
EXP 03/31/11
STRUCTURAL
STATE OF CALIFORNIA

CLIENT

U.S. DEPARTMENT OF ENERGY

SOLAR DECATHLON 2011

WWW.SOLARDECATHLON.GOV

LOT NUMBER:

DRAWN BY: UNIVERSITY OF HAWAI'I

CHECKED BY:

COPYRIGHT: UNIVERSITY OF HAWAI'I SCHOOL OF ARCHITECTURE

SHEET TITLE

FRAMING SECTIONS

S-301

PRODUCED BY AN AUTODESK EDUCATIONAL PRODUCT

PRODUCED BY AN AUTODESK EDUCATIONAL PRODUCT

PRODUCED BY AN AUTODESK EDUCATIONAL PRODUCT

PRODUCED BY AN AUTODESK EDUCATIONAL PRODUCT

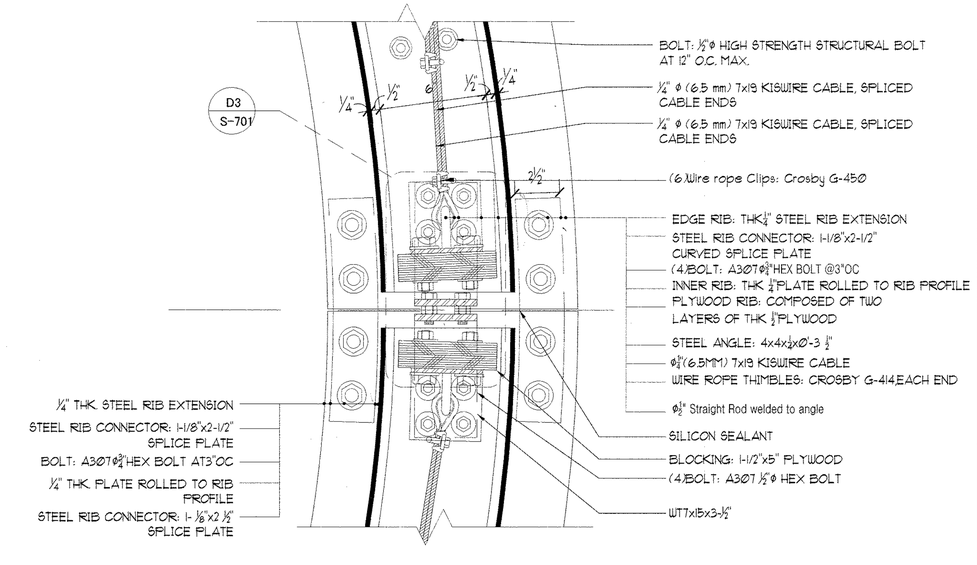

D1 TYPICAL INNER RIB DETAIL
3" = 1' - 0"

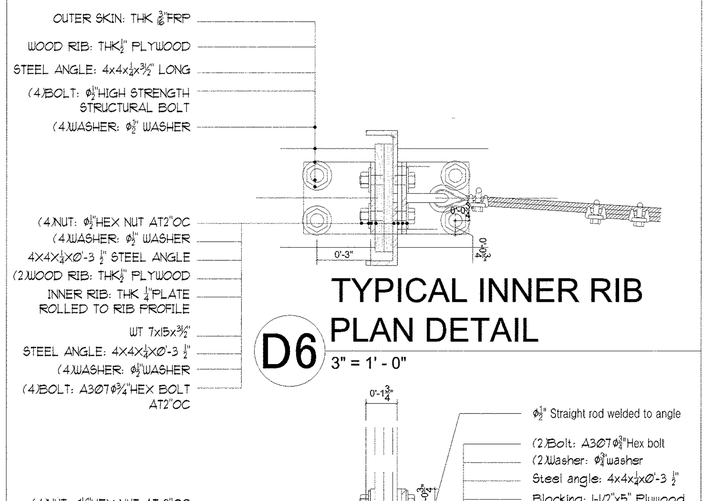

D6 TYPICAL INNER RIB PLAN DETAIL
3" = 1' - 0"

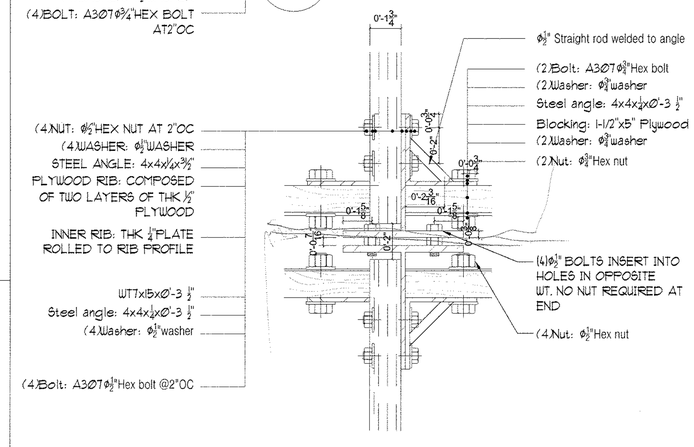

D2 TYPICAL INNER RIB DETAIL
3" = 1' - 0"

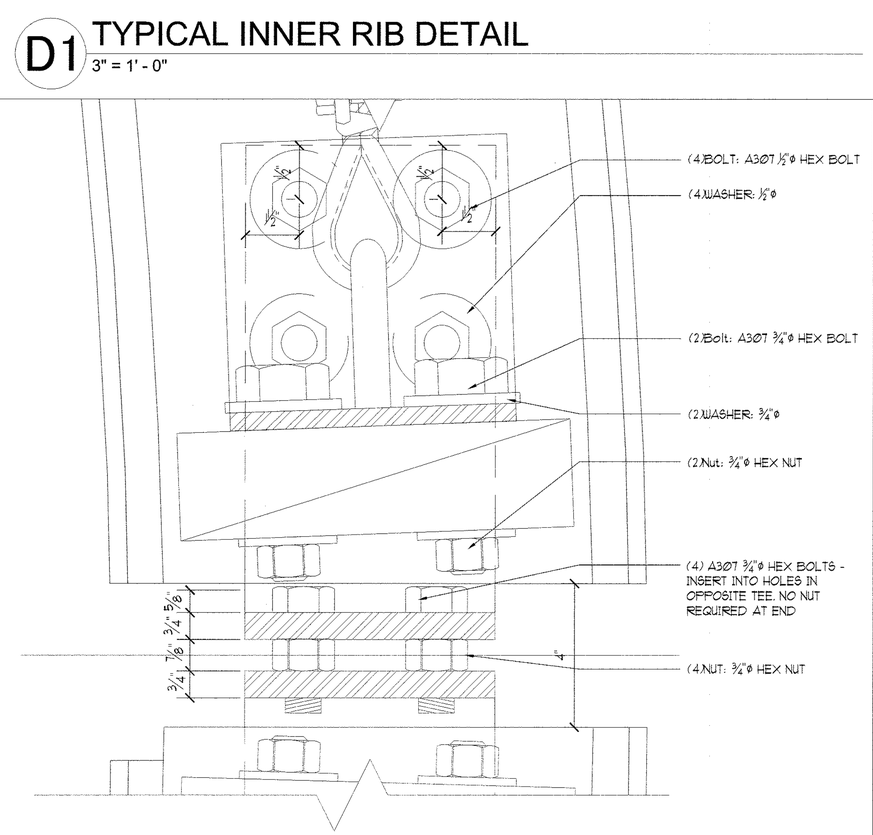

D3 TYPICAL INNER RIB DETAIL
6" = 1' - 0"

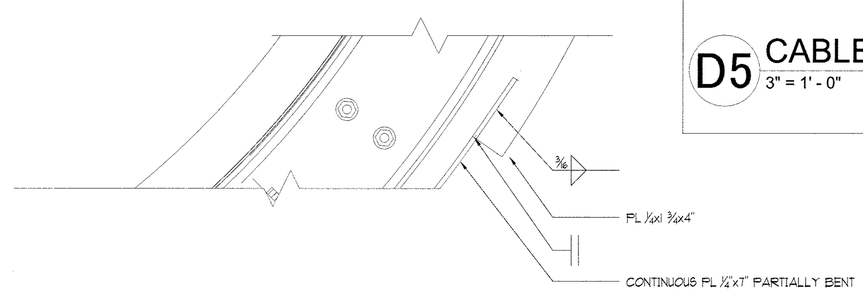

D4 RIB EXTENSION TAB DETAIL
3" = 1' - 0"

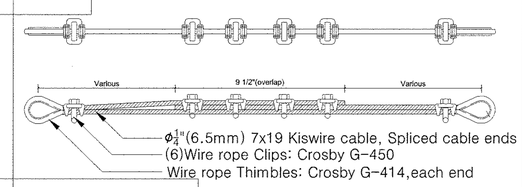

D5 CABLE DETAIL
3" = 1' - 0"

HALE PILIHONUA

TEAM NAME:	
ADDRESS:	
CONTACT:	
CONSULTANTS	
ARCHITECTURE:	
ENGINEERS:	
LANDSCAPING:	
SAFETY FIRST CODE CONSULTANTS:	

REGISTERED PROFESSIONAL ENGINEER
ANDRA A. WICHMAN
S 3449
EXP. 06/30/11
STRUCTURAL
STATE OF CALIFORNIA

CLIENT	
U.S. DEPARTMENT OF ENERGY	
SOLAR DECATHLON 2011	
WWW.SOLARDECATHLON.GOV	
LOT NUMBER:	
DRAWN BY:	UNIVERSITY OF HAWAI'I
CHECKED BY:	
COPYRIGHT:	UNIVERSITY OF HAWAI'I SCHOOL OF ARCHITECTURE

SHEET TITLE

FRAMING DETAILS

S-701

PRODUCED BY AN AUTODESK EDUCATIONAL PRODUCT
PRODUCED BY AN AUTODESK EDUCATIONAL PRODUCT
PRODUCED BY AN AUTODESK EDUCATIONAL PRODUCT

PRODUCED BY AN AUTODESK EDUCATIONAL PRODUCT

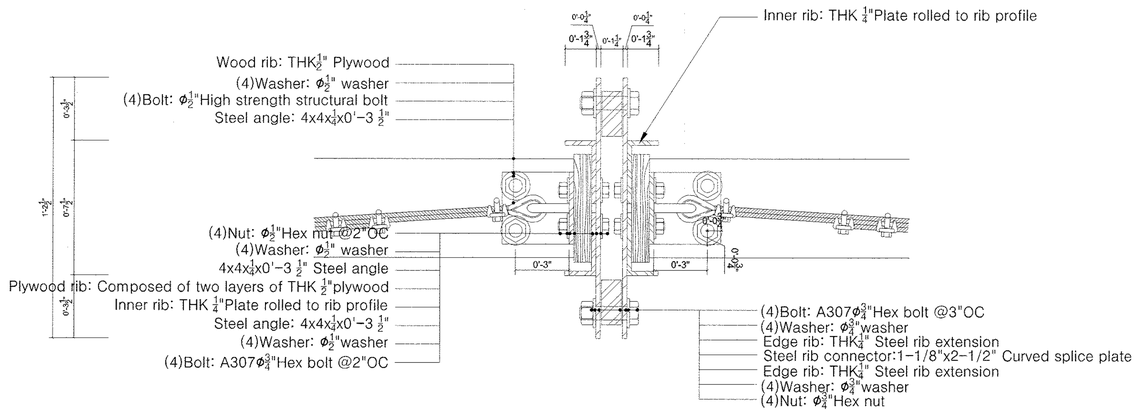

D1 MAJOR RIB PLAN DETAIL

3" = 1' - 0"

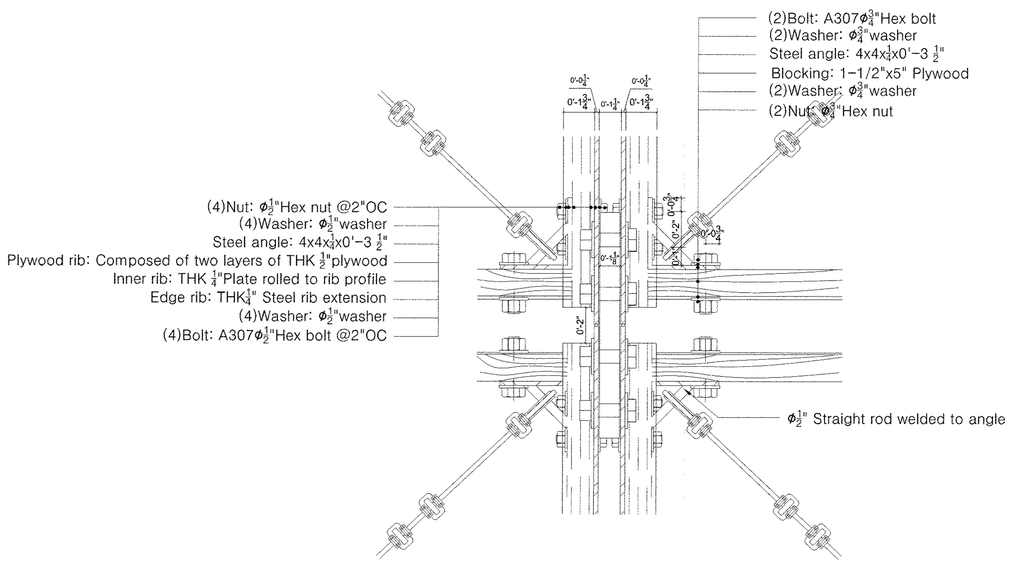

D2 MAJOR RIB ELEVATION DETAIL

3" = 1' - 0"

HALE PILIHONUA

TEAM NAME:
ADDRESS:
CONTACT:

CONSULTANTS
ARCHITECTURE:
ENGINEERS:
LANDSCAPING:
SAFETY FIRST CODE CONSULTANTS:

CLIENT
U.S. DEPARTMENT OF ENERGY
SOLAR DECATHLON 2011
WWW.SOLARDECATHLON.GOV

LOT NUMBER:
DRAWN BY: UNIVERSITY OF HAWAI'I
CHECKED BY:
COPYRIGHT: UNIVERSITY OF HAWAI'I SCHOOL OF ARCHITECTURE

SHEET TITLE
FRAMING DETAILS

S-702

PRODUCED BY AN AUTODESK EDUCATIONAL PRODUCT
PRODUCED BY AN AUTODESK EDUCATIONAL PRODUCT
PRODUCED BY AN AUTODESK EDUCATIONAL PRODUCT

PRODUCED BY AN AUTODESK EDUCATIONAL PRODUCT

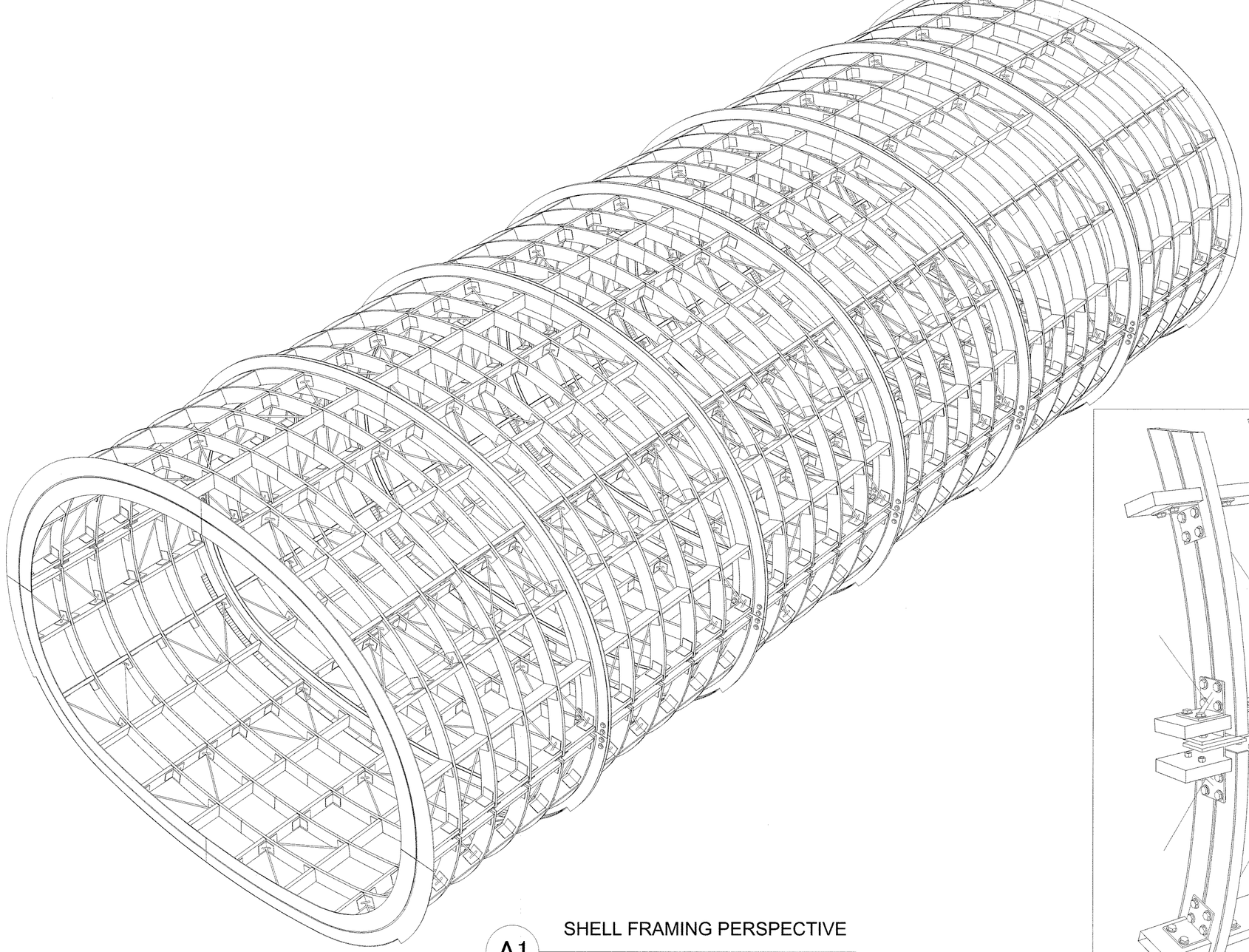

A1 SHELL FRAMING PERSPECTIVE

N.T.S.

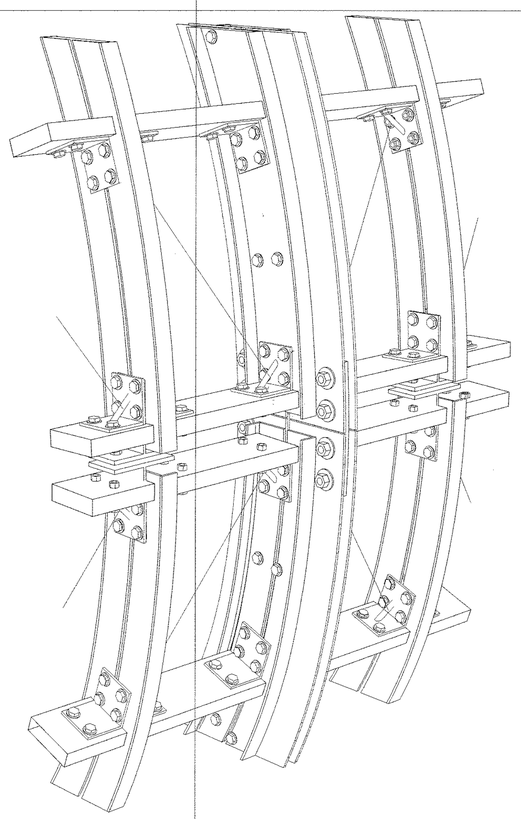

A2 MODULE SPLICE & SHELL SPLICE PERSPECTIVE DETAIL

N.T.S.

HALE PILIHONUA

TEAM NAME:

ADDRESS:

CONTACT:

CONSULTANTS

ARCHITECTURE:

ENGINEERS:

LANDSCAPING:

SAFETY FIRST CODE CONSULTANTS:

REGISTERED PROFESSIONAL ENGINEER JOHN A. WORLEY S 3449 EXP. 06/31/11 STRUCTURAL STATE OF CALIFORNIA

CLIENT

U.S. DEPARTMENT OF ENERGY

SOLAR DECATHLON 2011

WWW.SOLARDECATHLON.GOV

LOT NUMBER:

DRAWN BY: UNIVERSITY OF HAWAI'I

CHECKED BY:

COPYRIGHT: UNIVERSITY OF HAWAI'I SCHOOL OF ARCHITECTURE

SHEET TITLE

FRAMING ISOMETRICS

S-901

PRODUCED BY AN AUTODESK EDUCATIONAL PRODUCT

PRODUCED BY AN AUTODESK EDUCATIONAL PRODUCT

PRODUCED BY AN AUTODESK EDUCATIONAL PRODUCT

PRODUCED BY AN AUTODESK EDUCATIONAL PRODUCT

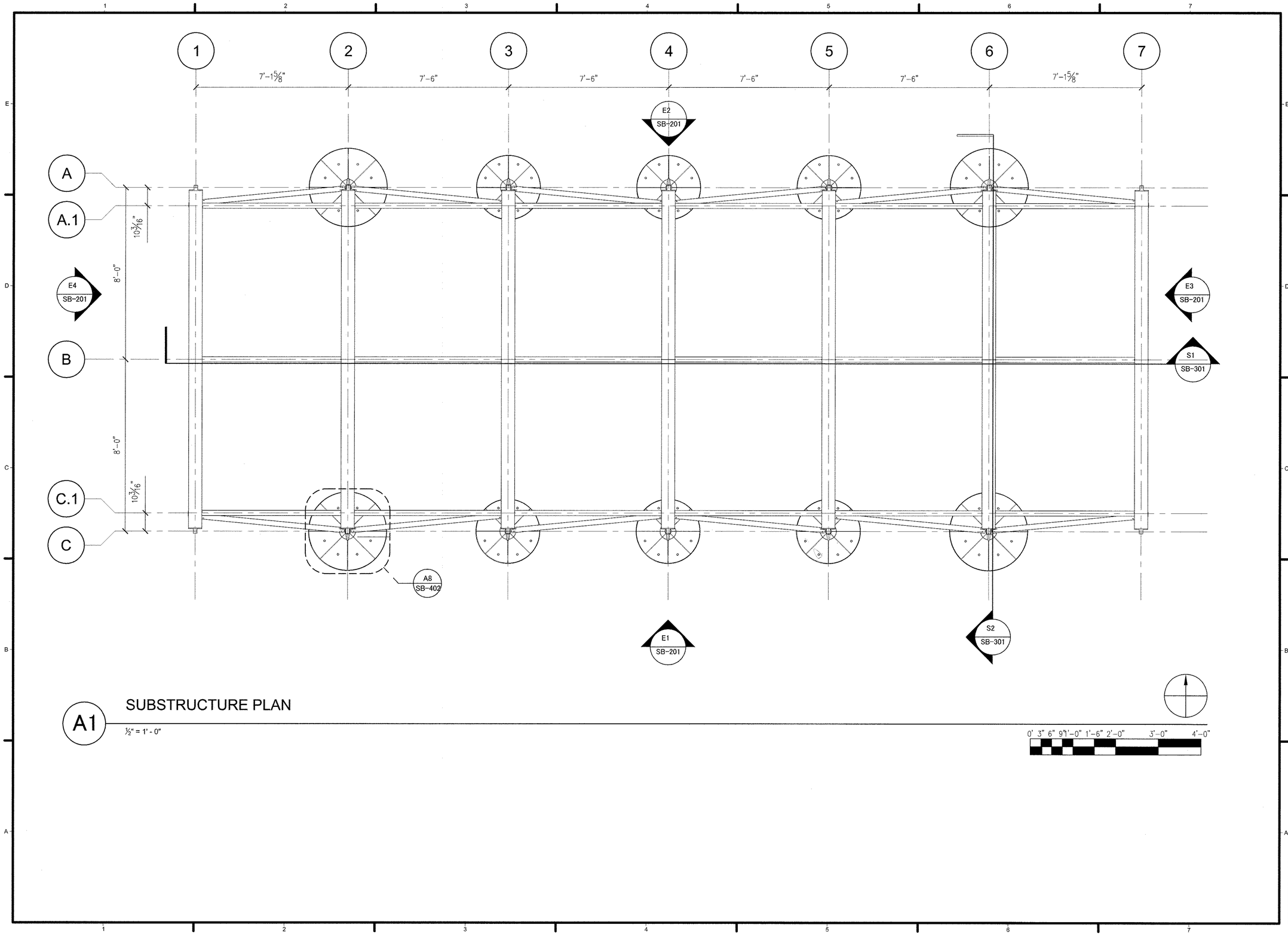

A1 SUBSTRUCTURE PLAN

½" = 1' - 0"

HALE PILIHONUA

TEAM NAME:

ADDRESS:

CONTACT:

CONSULTANTS

ARCHITECTURE:

ENGINEERS:

LANDSCAPING:

SAFETY FIRST CODE CONSULTANTS:

CLIENT

U.S. DEPARTMENT OF ENERGY

SOLAR DECATHLON 2011

WWW.SOLARDECATHLON.GOV

LOT NUMBER:

DRAWN BY: UNIVERSITY OF HAWAI'I

CHECKED BY:

COPYRIGHT: UNIVERSITY OF HAWAI'I SCHOOL OF ARCHITECTURE

SHEET TITLE

FOUNDATION PLAN

SB-101

PRODUCED BY AN AUTODESK EDUCATIONAL PRODUCT

PRODUCED BY AN AUTODESK EDUCATIONAL PRODUCT

PRODUCED BY AN AUTODESK EDUCATIONAL PRODUCT

PRODUCED BY AN AUTODESK EDUCATIONAL PRODUCT

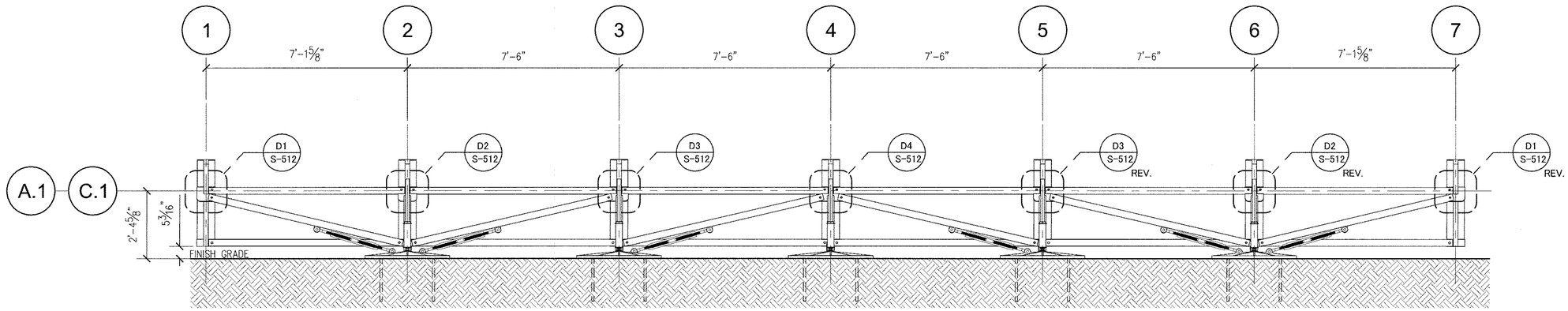

E1 SUBSTRUCTURE SOUTH ELEVATION

½" = 1' - 0"

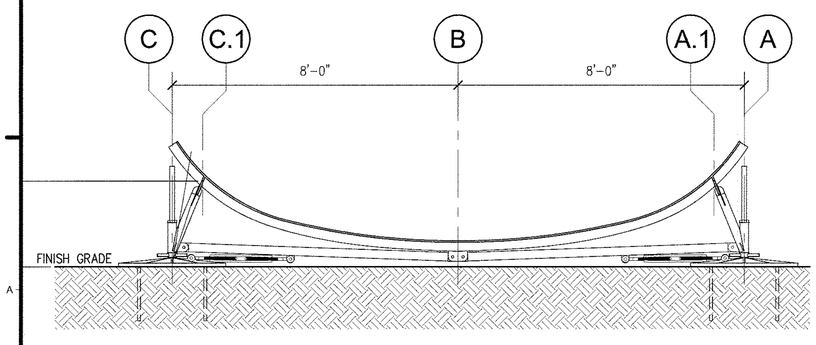

E3 SUBSTRUCTURE EAST ELEVATION

½" = 1' - 0"

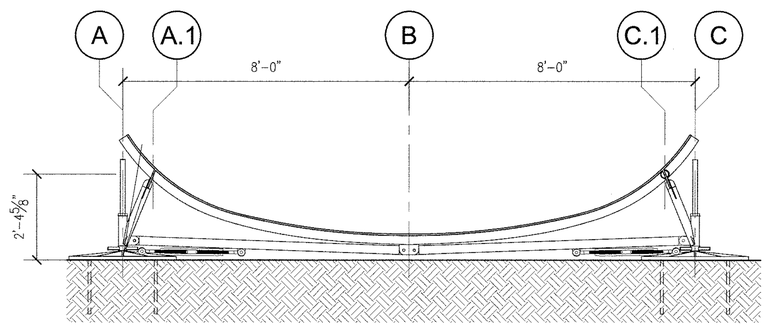

E4 SUBSTRUCTURE WEST ELEVATION

½" = 1' - 0"

HALE PILIHONUA

TEAM NAME:

ADDRESS:

CONTACT:

CONSULTANTS

ARCHITECTURE:

ENGINEERS:

LANDSCAPING:

SAFETY FIRST CODE CONSULTANTS:

CLIENT

U.S. DEPARTMENT OF ENERGY

SOLAR DECATHLON 2011

WWW.SOLARDECATHLON.GOV

LOT NUMBER:

DRAWN BY: UNIVERSITY OF HAWAI'I

CHECKED BY:

COPYRIGHT: UNIVERSITY OF HAWAI'I SCHOOL OF ARCHITECTURE

SHEET TITLE

FOUNDATION ELEVATIONS

SB-201

PRODUCED BY AN AUTODESK EDUCATIONAL PRODUCT

PRODUCED BY AN AUTODESK EDUCATIONAL PRODUCT

PRODUCED BY AN AUTODESK EDUCATIONAL PRODUCT

PRODUCED BY AN AUTODESK EDUCATIONAL PRODUCT

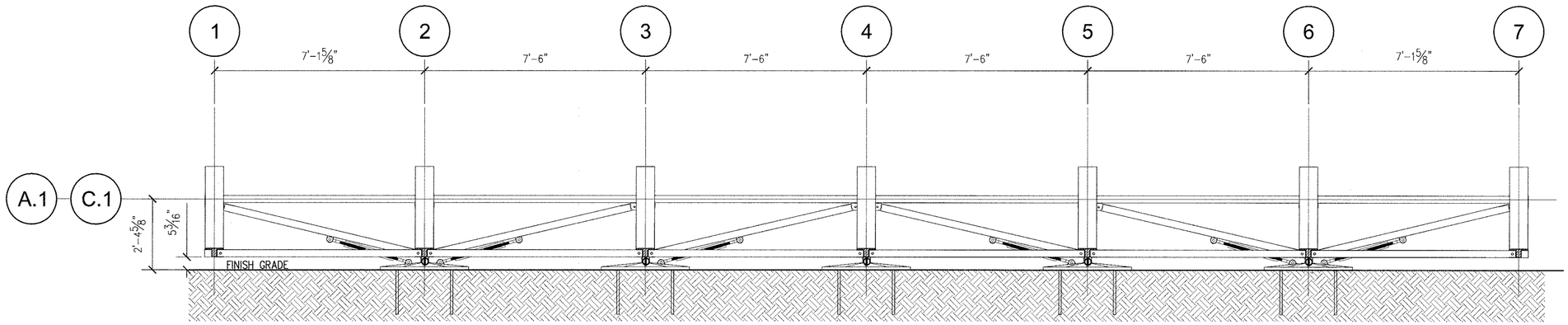

S1 SUBSTRUCTURE LONGITUDINAL SECTION

½" = 1' - 0"

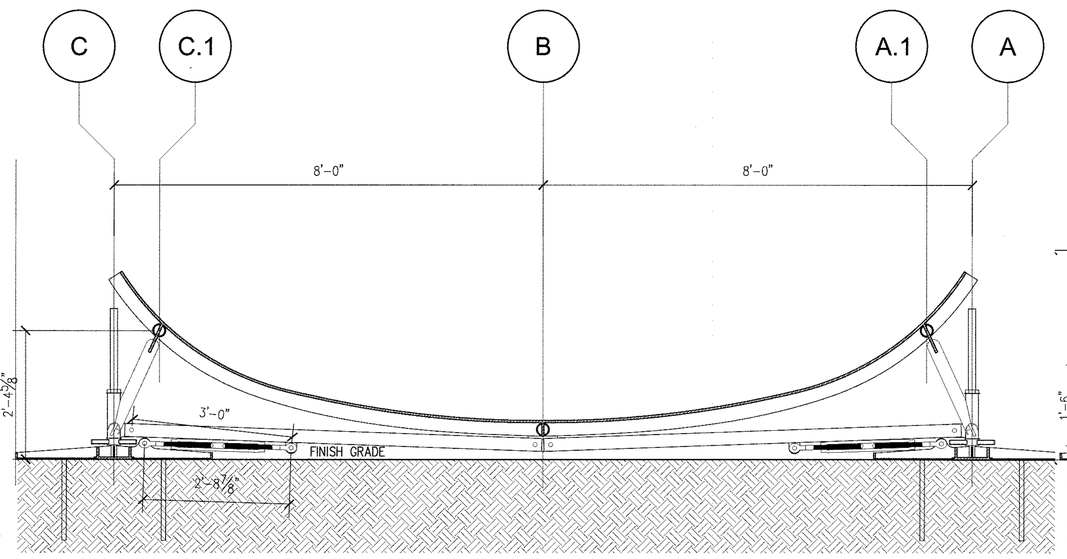

S2 SUBSTRUCTURE TRANSVERSE SECTION

¾" = 1' - 0"

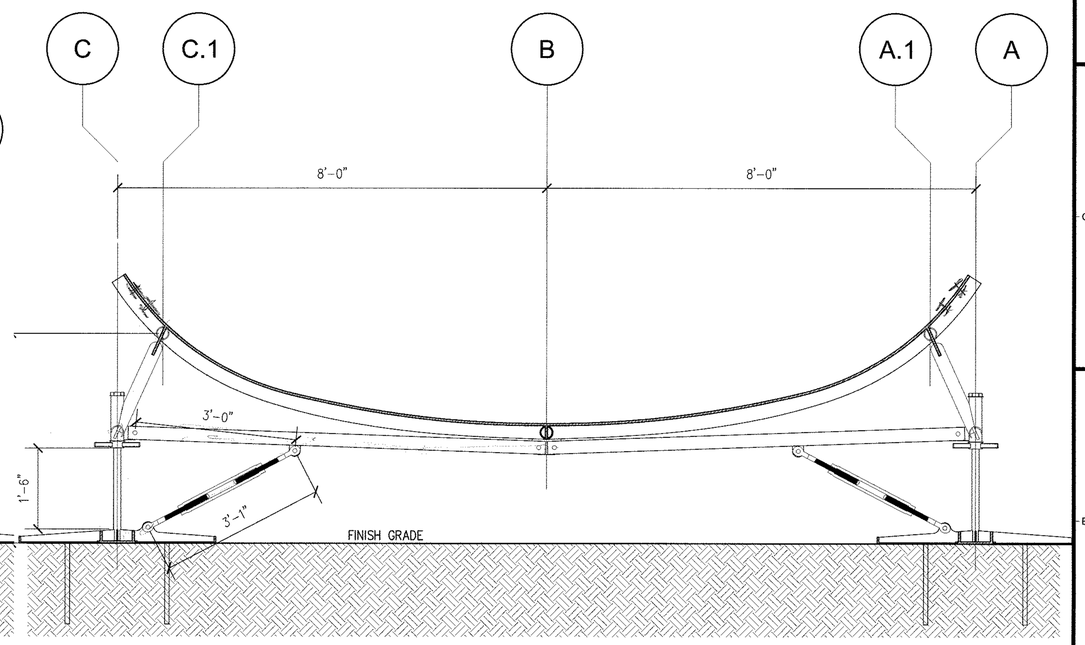

S3 SUBSTRUCTURE TRANSVERSE SECTION ELEVATED

¾" = 1' - 0"

HALE PILIHONUA

TEAM NAME:
ADDRESS:
CONTACT:

CONSULTANTS
ARCHITECTURE:
ENGINEERS:
LANDSCAPING:
SAFETY FIRST CODE CONSULTANTS:

CLIENT
U.S. DEPARTMENT OF ENERGY
SOLAR DECATHLON 2011
WWW.SOLARDECATHLON.GOV

LOT NUMBER:
DRAWN BY: UNIVERSITY OF HAWAI'I
CHECKED BY:
COPYRIGHT: UNIVERSITY OF HAWAI'I SCHOOL OF ARCHITECTURE

SHEET TITLE
FOUNDATION SECTIONS

SB-301

PRODUCED BY AN AUTODESK EDUCATIONAL PRODUCT
PRODUCED BY AN AUTODESK EDUCATIONAL PRODUCT
PRODUCED BY AN AUTODESK EDUCATIONAL PRODUCT

PRODUCED BY AN AUTODESK EDUCATIONAL PRODUCT

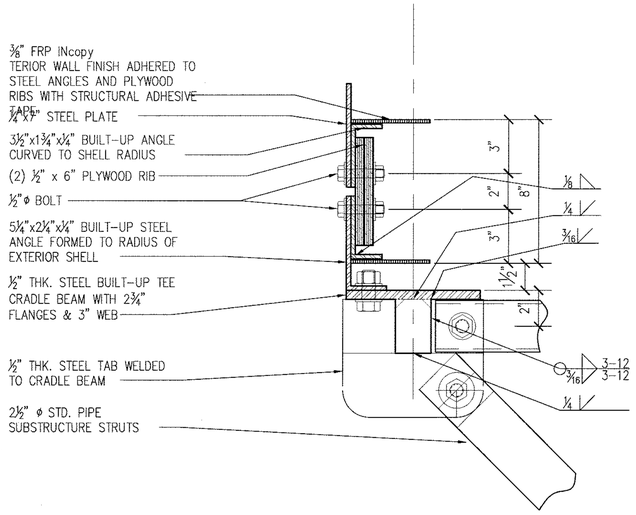

D1 STRUT CONNECTION DETAIL A

3" = 1' - 0"

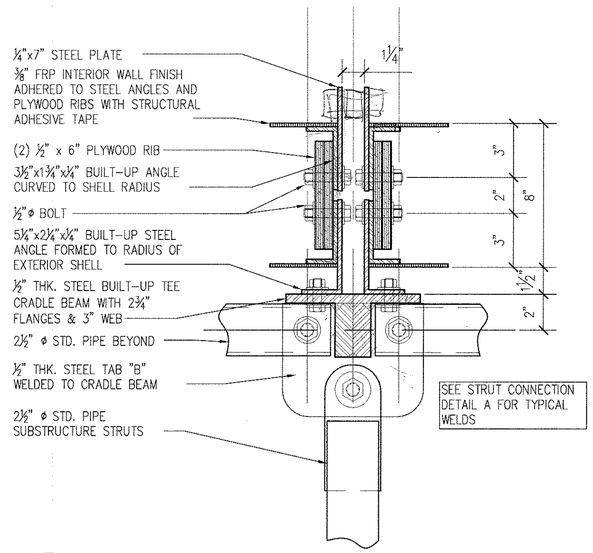

D2 STRUT CONNECTION DETAIL B

3" = 1' - 0"

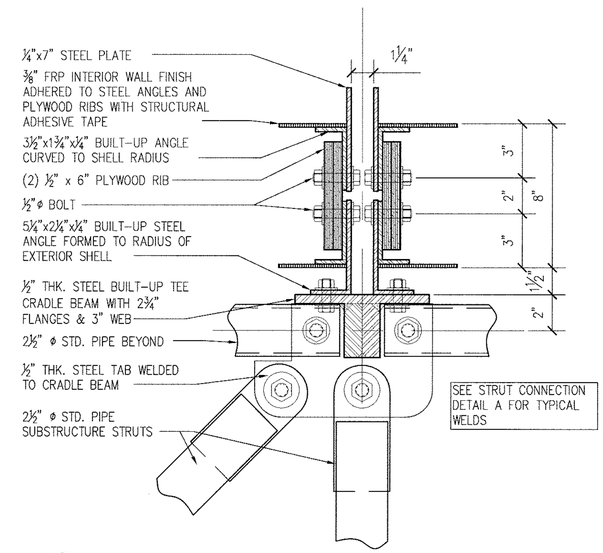

D3 STRUT CONNECTION DETAIL C

3" = 1' - 0"

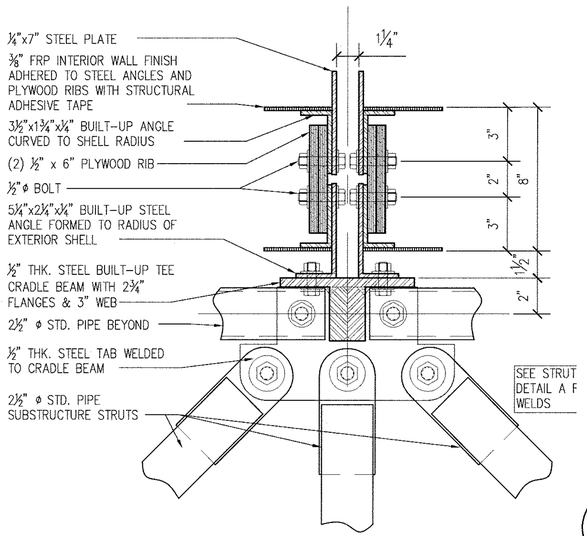

D4 STRUT CONNECTION DETAIL D

3" = 1' - 0"

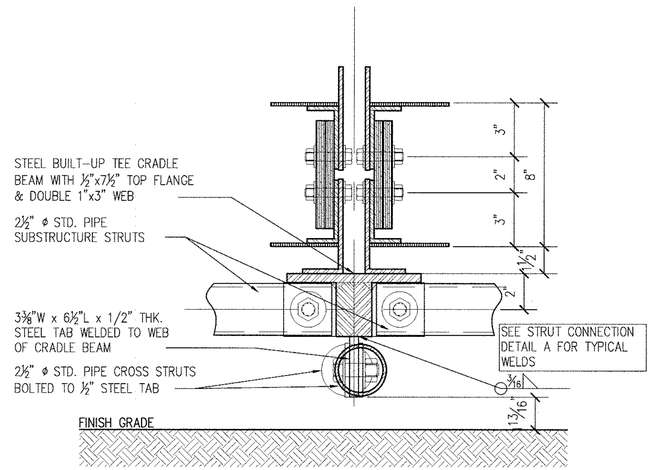

D5 LOWER HORIZANTAL STRUT CONNECTION 1-A

3" = 1'-0"

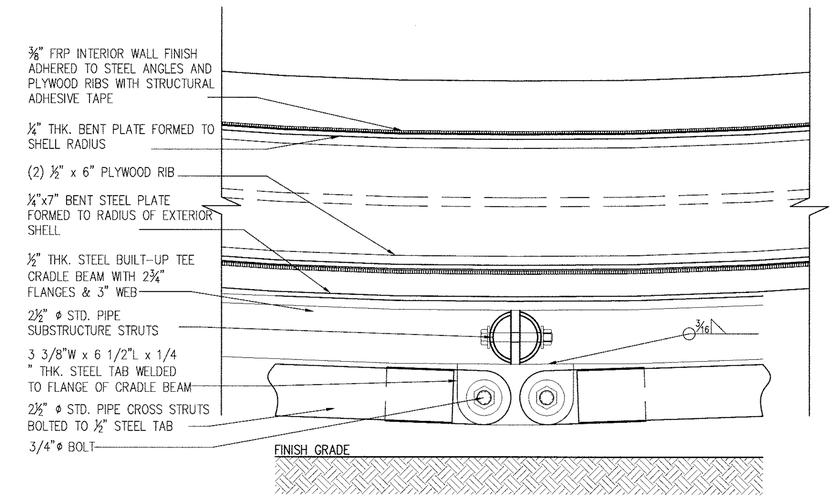

D6 LOWER HORIZONTAL STRUT CONNECTION 1-B

1"=3'-0"

HALE PILIHONUA

TEAM NAME:
ADDRESS:
CONTACT:

CONSULTANTS
ARCHITECTURE:
ENGINEERS:
LANDSCAPING:
SAFETY FIRST CODE CONSULTANTS:

CLIENT
U.S. DEPARTMENT OF ENERGY
SOLAR DECATHLON 2011
WWW.SOLARDECATHLON.GOV

LOT NUMBER:
DRAWN BY: UNIVERSITY OF HAWAI'I
CHECKED BY:
COPYRIGHT: UNIVERSITY OF HAWAI'I SCHOOL OF ARCHITECTURE

SHEET TITLE
FOUNDATION DETAILS

SB-401

PRODUCED BY AN AUTODESK EDUCATIONAL PRODUCT
PRODUCED BY AN AUTODESK EDUCATIONAL PRODUCT
PRODUCED BY AN AUTODESK EDUCATIONAL PRODUCT

PRODUCED BY AN AUTODESK EDUCATIONAL PRODUCT

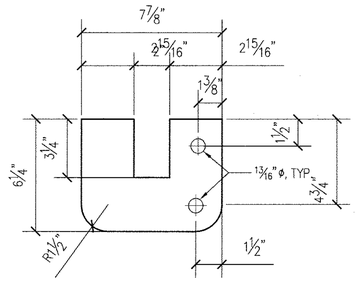

A1 STEEL TAB PLATE A
3" = 1' - 0"

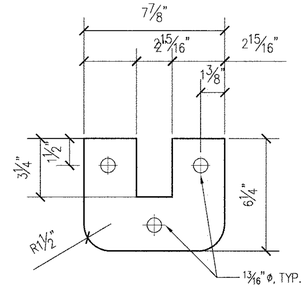

A2 STEEL TAB PLATE B
3" = 1' - 0"

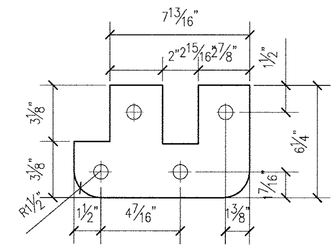

A3 STEEL TAB PLATE C
3" = 1' - 0"

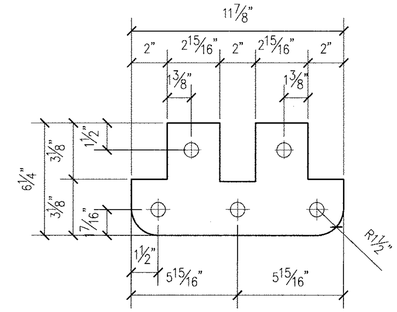

A4 STEEL TAB PLATE D
3" = 1' - 0"

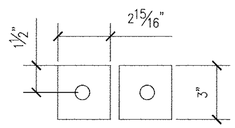

A5 STEEL TAB PLATE E
3" = 1' - 0"

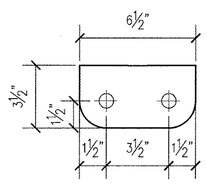

A6 STEEL TAB PLATE F
3" = 1' - 0"

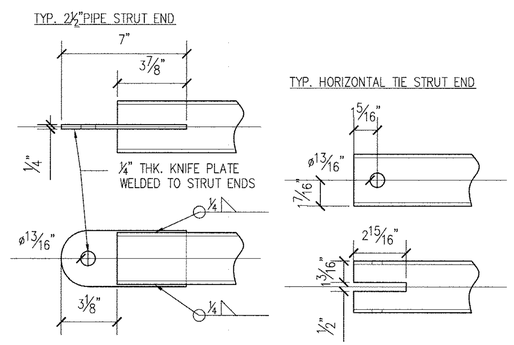

A7 STRUT CONNECTION ENDS
3" = 1'-0"

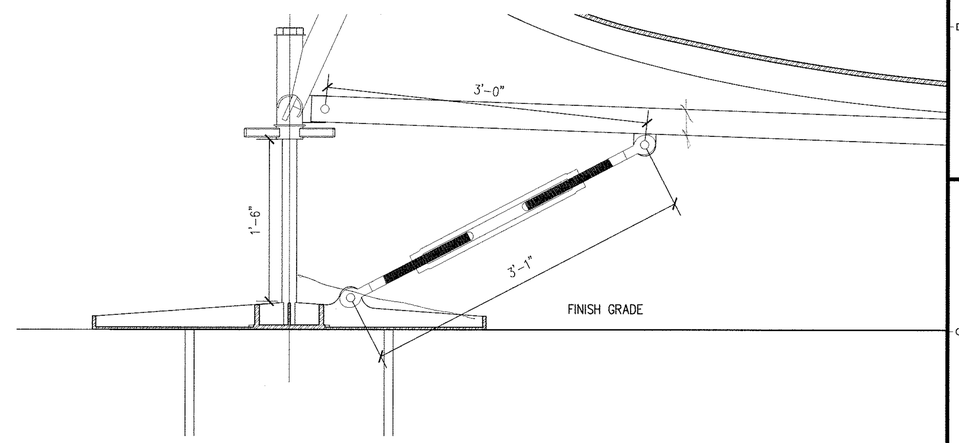

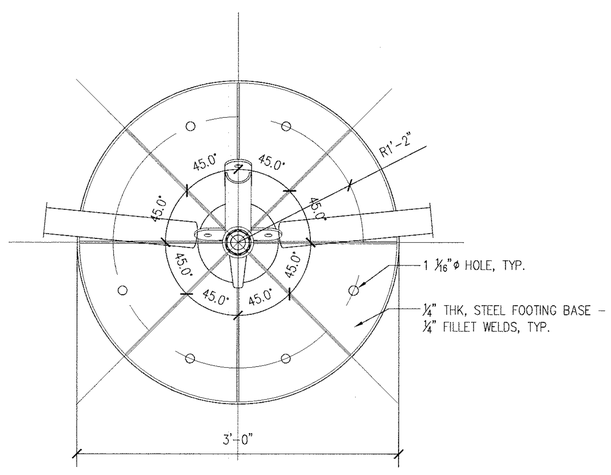

A8 TYPICAL FOOTING PLAN DETAIL
1 1/2" = 1'= 0"

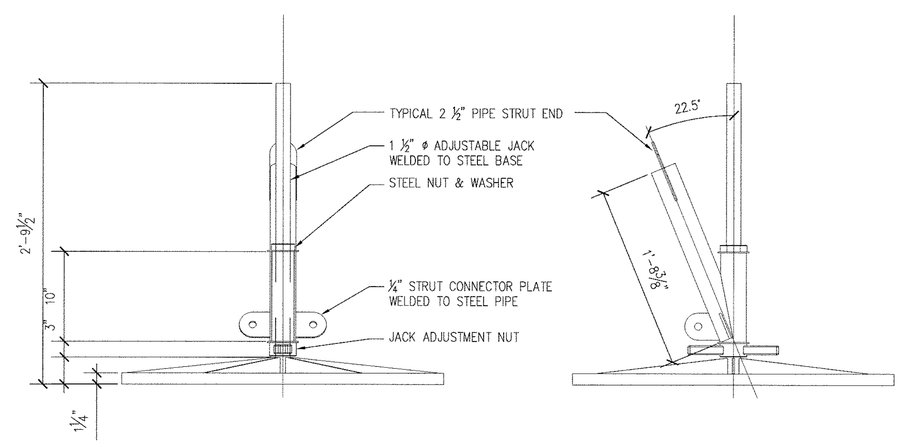

A9 TYPICAL FOOTING ELEVATIONS
1 1/2" = 1'= 0"

HALE PILIHONUA

TEAM NAME:
ADDRESS:
CONTACT:

CONSULTANTS
ARCHITECTURE:
ENGINEERS:
LANDSCAPING:
SAFETY FIRST CODE CONSULTANTS:

CLIENT
U.S. DEPARTMENT OF ENERGY
SOLAR DECATHLON 2011
WWW.SOLARDECATHLON.GOV

LOT NUMBER:
DRAWN BY: UNIVERSITY OF HAWAI'I
CHECKED BY:
COPYRIGHT: UNIVERSITY OF HAWAI'I SCHOOL OF ARCHITECTURE

SHEET TITLE
FOUNDATION DETAILS

SB-402

PRODUCED BY AN AUTODESK EDUCATIONAL PRODUCT
PRODUCED BY AN AUTODESK EDUCATIONAL PRODUCT
PRODUCED BY AN AUTODESK EDUCATIONAL PRODUCT

PRODUCED BY AN AUTODESK EDUCATIONAL PRODUCT

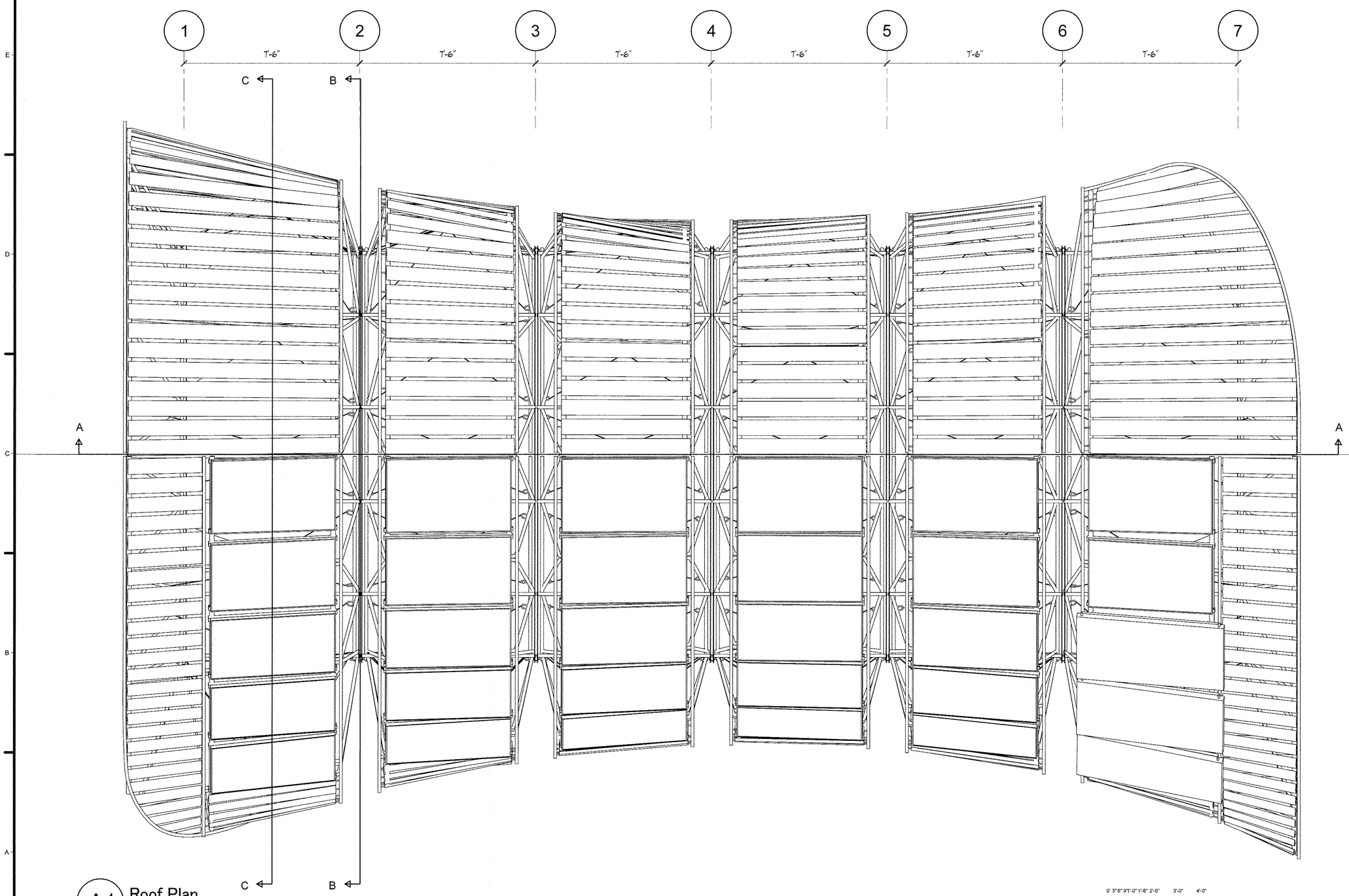

A1 Roof Plan
½" = 1' - 0"

HALE PILIHONUA

TEAM NAME:
ADDRESS:
CONTACT:

CONSULTANTS
ARCHITECTURE:
ENGINEERS:
LANDSCAPING:
SAFETY FIRST CODE CONSULTANTS:

CLIENT
U.S. DEPARTMENT OF ENERGY
SOLAR DECATHLON 2011
WWW.SOLARDECATHLON.GOV

LOT NUMBER:
DRAWN BY: UNIVERSITY OF HAWAI'I
CHECKED BY:
COPYRIGHT: UNIVERSITY OF HAWAI'I SCHOOL OF ARCHITECTURE

SHEET TITLE
SUPERSTRUCTURE PLANS

SP-201

PRODUCED BY AN AUTODESK EDUCATIONAL PRODUCT
PRODUCED BY AN AUTODESK EDUCATIONAL PRODUCT
PRODUCED BY AN AUTODESK EDUCATIONAL PRODUCT

PRODUCED BY AN AUTODESK EDUCATIONAL PRODUCT

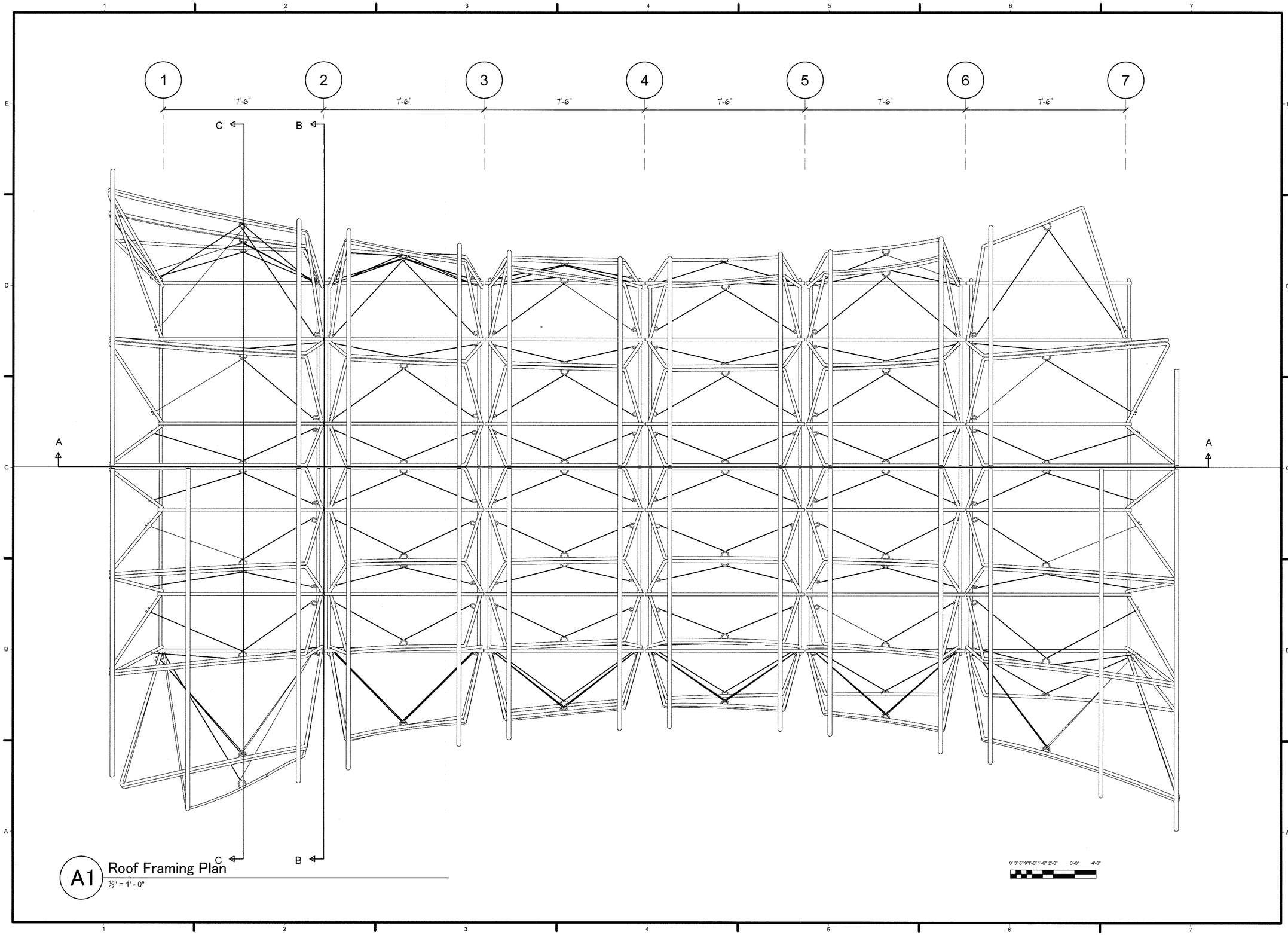

A1 Roof Framing Plan
½" = 1' - 0"

HALE PILIHONUA

TEAM NAME:
ADDRESS:
CONTACT:

CONSULTANTS
ARCHITECTURE:
ENGINEERS:
LANDSCAPING:
SAFETY FIRST CODE CONSULTANTS:

CLIENT
U.S. DEPARTMENT OF ENERGY
SOLAR DECATHLON 2011
WWW.SOLARDECATHLON.GOV

LOT NUMBER:
DRAWN BY: UNIVERSITY OF HAWAI'I
CHECKED BY:
COPYRIGHT: UNIVERSITY OF HAWAI'I SCHOOL OF ARCHITECTURE

SHEET TITLE
SUPERSTRUCTURE PLANS

SP-202

PRODUCED BY AN AUTODESK EDUCATIONAL PRODUCT
PRODUCED BY AN AUTODESK EDUCATIONAL PRODUCT
PRODUCED BY AN AUTODESK EDUCATIONAL PRODUCT

PRODUCED BY AN AUTODESK EDUCATIONAL PRODUCT

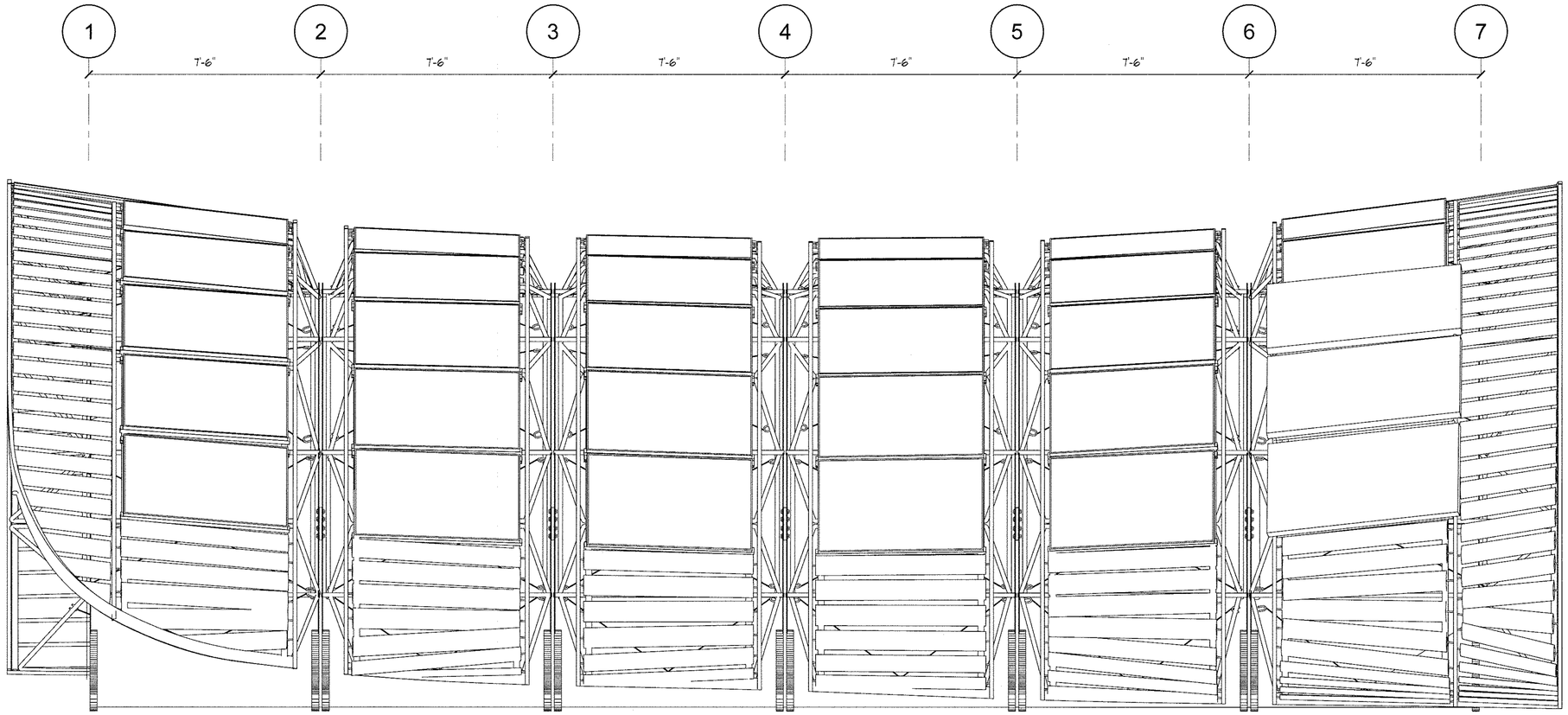

A1 SOUTH ELEVATION (Panels and Louvers Installed)

½" = 1' - 0"

0' 3" 6" 9" 1'-0" 1'-6" 2'-0" 3'-0" 4'-0"

HALE PILIHONUA

TEAM NAME:

ADDRESS:

CONTACT:

CONSULTANTS

ARCHITECTURE:

ENGINEERS:

LANDSCAPING:

SAFETY FIRST CODE CONSULTANTS:

EXP. 03/31/11 STRUCTURAL STATE OF CALIFORNIA

CLIENT

U.S. DEPARTMENT OF ENERGY

SOLAR DECATHLON 2011

WWW.SOLARDECATHLON.GOV

LOT NUMBER:

DRAWN BY: UNIVERSITY OF HAWAI'I

CHECKED BY:

COPYRIGHT: UNIVERSITY OF HAWAI'I SCHOOL OF ARCHITECTURE

SHEET TITLE

SUPERSTRUCTURE ELEVATIONS

SP-301

PRODUCED BY AN AUTODESK EDUCATIONAL PRODUCT

PRODUCED BY AN AUTODESK EDUCATIONAL PRODUCT

PRODUCED BY AN AUTODESK EDUCATIONAL PRODUCT

PRODUCED BY AN AUTODESK EDUCATIONAL PRODUCT

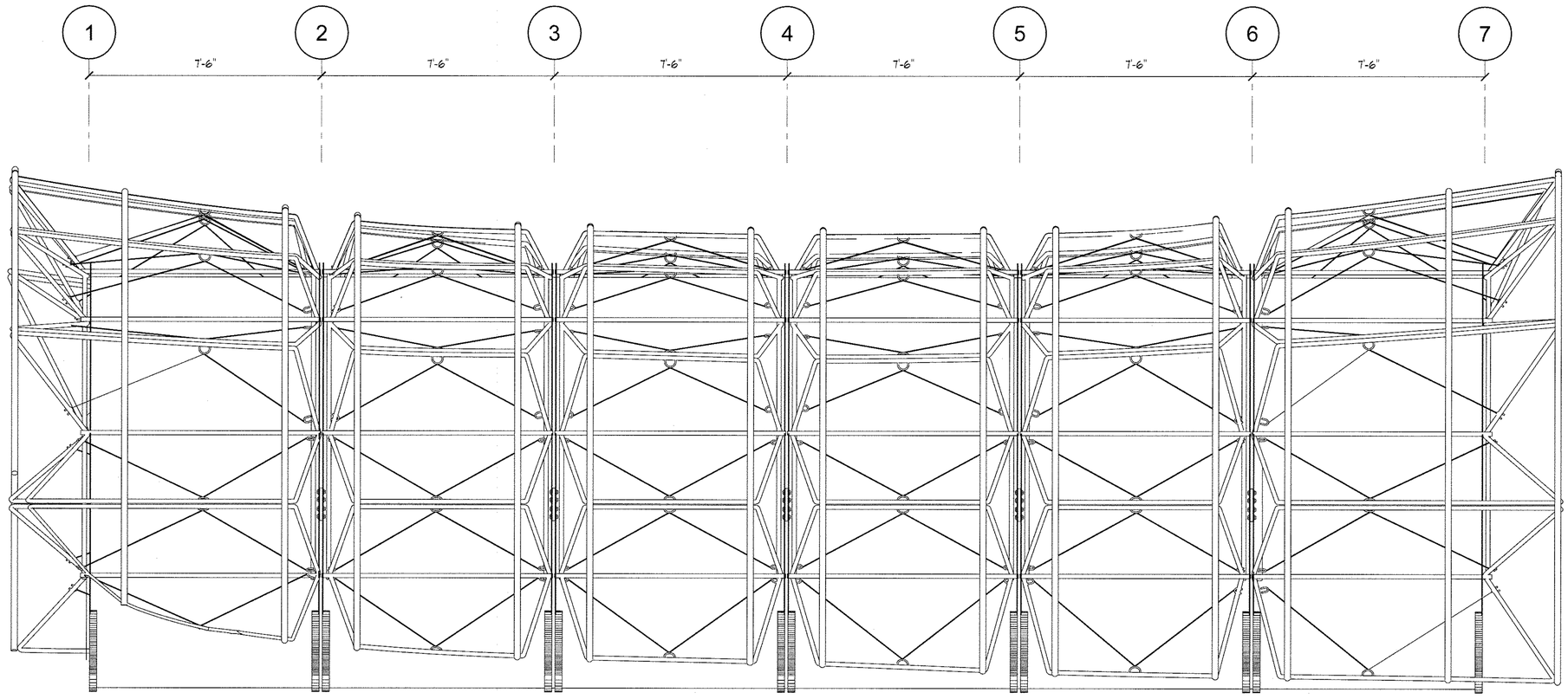

A1 SOUTH ELEVATION (Panels and Louvers Uninstalled)
½" = 1' - 0"

0' 3" 6" 9" 1'-0" 1'-6" 2'-0" 3'-0" 4'-0"

HALE PILIHONUA

TEAM NAME:
ADDRESS:
CONTACT:

CONSULTANTS
ARCHITECTURE:
ENGINEERS:
LANDSCAPING:
SAFETY FIRST CODE CONSULTANTS:

CLIENT
U.S. DEPARTMENT OF ENERGY
SOLAR DECATHLON 2011
WWW.SOLARDECATHLON.GOV

LOT NUMBER:
DRAWN BY: UNIVERSITY OF HAWAI'I
CHECKED BY:
COPYRIGHT: UNIVERSITY OF HAWAI'I SCHOOL OF ARCHITECTURE

SHEET TITLE
SUPERSTRUCTURE ELEVATIONS

SP-302

PRODUCED BY AN AUTODESK EDUCATIONAL PRODUCT
PRODUCED BY AN AUTODESK EDUCATIONAL PRODUCT
PRODUCED BY AN AUTODESK EDUCATIONAL PRODUCT

PRODUCED BY AN AUTODESK EDUCATIONAL PRODUCT

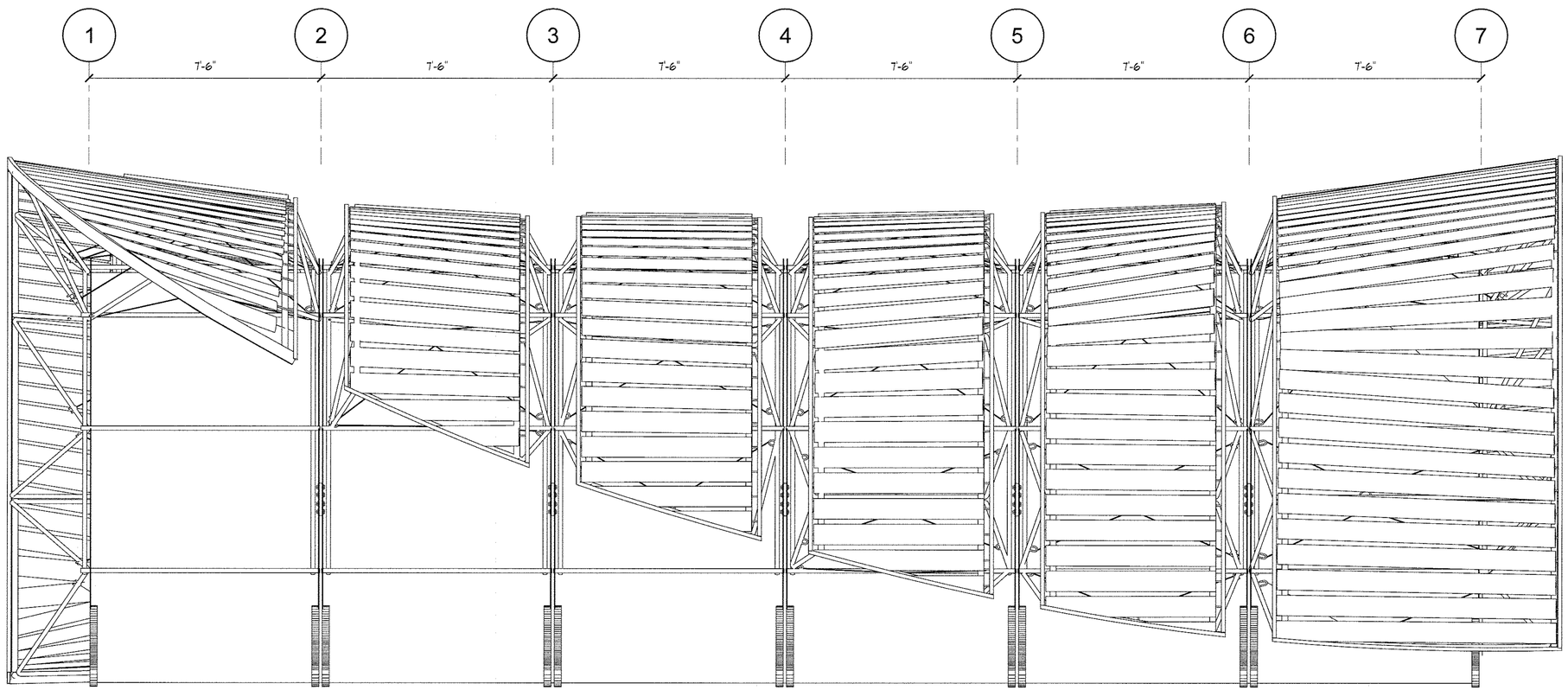

A1 North Elevation (Louvers Installed)
½" = 1' - 0"

0' 3" 6" 9" 1'-0" 1'-6" 2'-0" 3'-0" 4'-0"

HALE PILIHONUA

TEAM NAME:
ADDRESS:
CONTACT:

CONSULTANTS
ARCHITECTURE:
ENGINEERS:
LANDSCAPING:
SAFETY FIRST CODE CONSULTANTS:

REGISTERED PROFESSIONAL ENGINEER
NORMAN A. WORLEY
S 3449
EXP. 03/31/11
STRUCTURAL
STATE OF CALIFORNIA

CLIENT
U.S. DEPARTMENT OF ENERGY
SOLAR DECATHLON 2011
WWW.SOLARDECATHLON.GOV

LOT NUMBER:
DRAWN BY: UNIVERSITY OF HAWAI'I
CHECKED BY:
COPYRIGHT: UNIVERSITY OF HAWAI'I SCHOOL OF ARCHITECTURE

SHEET TITLE
SUPERSTRUCTURE ELEVATIONS

SP-303

PRODUCED BY AN AUTODESK EDUCATIONAL PRODUCT
PRODUCED BY AN AUTODESK EDUCATIONAL PRODUCT
PRODUCED BY AN AUTODESK EDUCATIONAL PRODUCT

PRODUCED BY AN AUTODESK EDUCATIONAL PRODUCT

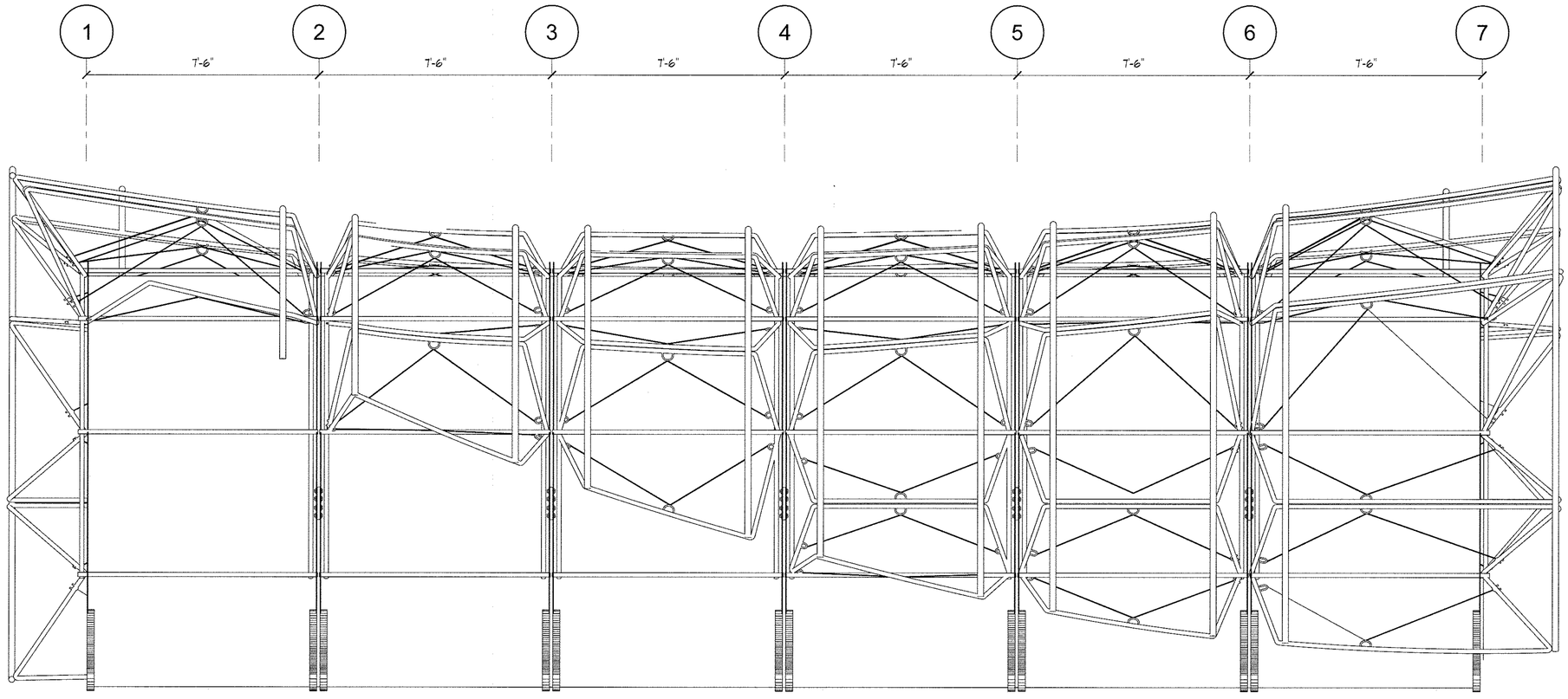

A1 North Framing Elevation
½" = 1' - 0"

0' 3" 6" 9" 1'-0" 1'-6" 2'-0" 3'-0" 4'-0"

HALE PILIHONUA

TEAM NAME:
ADDRESS:
CONTACT:

CONSULTANTS
ARCHITECTURE:
ENGINEERS:
LANDSCAPING:
SAFETY FIRST CODE CONSULTANTS:

CLIENT
U.S. DEPARTMENT OF ENERGY
SOLAR DECATHLON 2011
WWW.SOLARDECATHLON.GOV

LOT NUMBER:
DRAWN BY: UNIVERSITY OF HAWAI'I
CHECKED BY:
COPYRIGHT: UNIVERSITY OF HAWAI'I SCHOOL OF ARCHITECTURE

SHEET TITLE
SUPERSTRUCTURE ELEVATIONS

SP-304

PRODUCED BY AN AUTODESK EDUCATIONAL PRODUCT
PRODUCED BY AN AUTODESK EDUCATIONAL PRODUCT
PRODUCED BY AN AUTODESK EDUCATIONAL PRODUCT

PRODUCED BY AN AUTODESK EDUCATIONAL PRODUCT

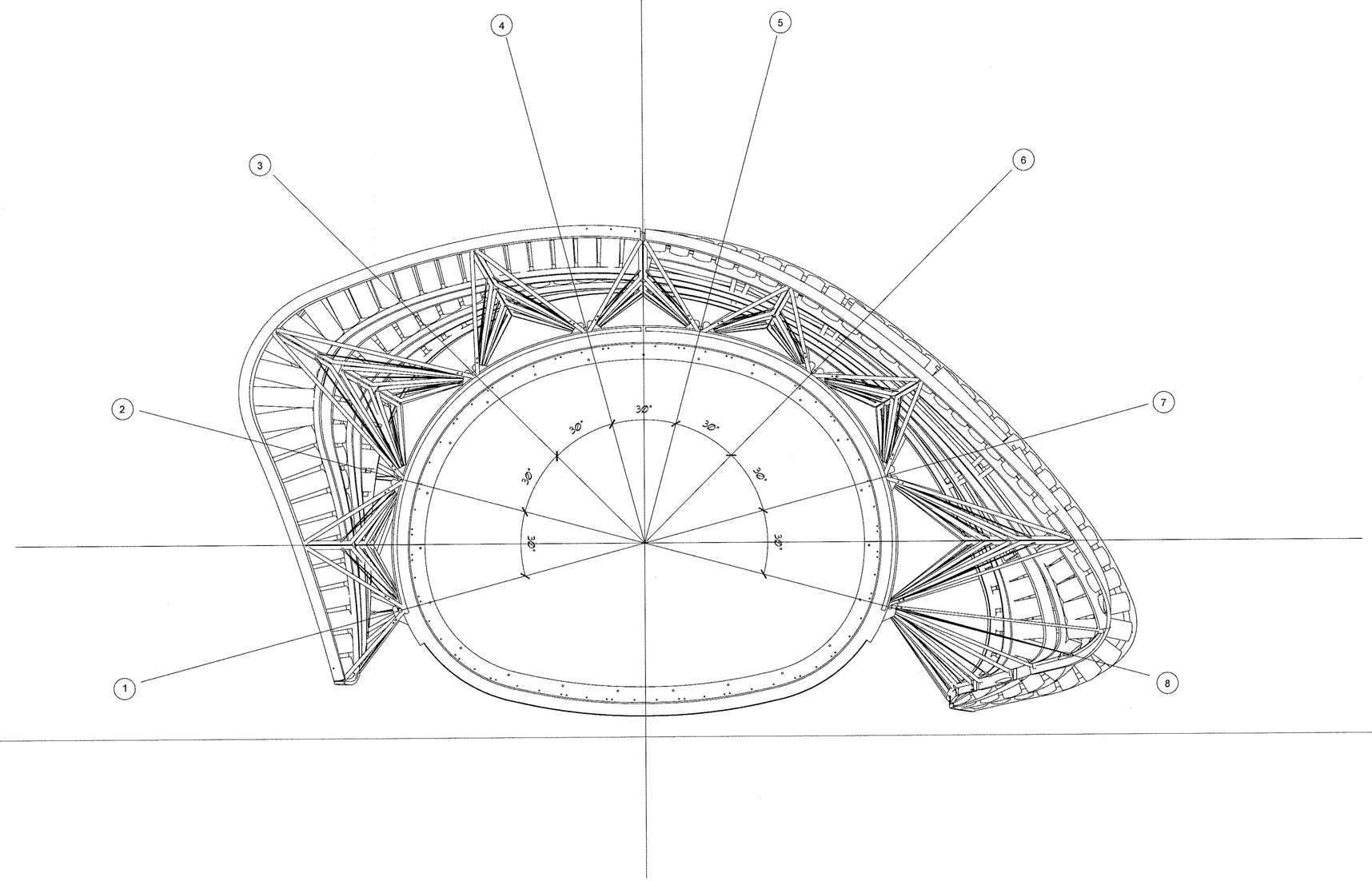

A1 West Elevation
½" = 1' - 0"

0' 3" 6" 9" 1'-0" 1'-6" 2'-0" 3'-0" 4'-0"

HALE PILIHONUA

TEAM NAME:
ADDRESS:
CONTACT:

CONSULTANTS
ARCHITECTURE:
ENGINEERS:
LANDSCAPING:
SAFETY FIRST CODE CONSULTANTS:

REGISTERED PROFESSIONAL ENGINEER
JOHN A. WORLEY
S 3469
EXP. 08/31/11
STRUCTURAL
STATE OF CALIFORNIA

CLIENT
U.S. DEPARTMENT OF ENERGY
SOLAR DECATHLON 2011
WWW.SOLARDECATHLON.GOV

LOT NUMBER:
DRAWN BY: UNIVERSITY OF HAWAI'I
CHECKED BY:
COPYRIGHT: UNIVERSITY OF HAWAI'I SCHOOL OF ARCHITECTURE

SHEET TITLE
SUPERSTRUCTURE ELEVATIONS

SP-305

PRODUCED BY AN AUTODESK EDUCATIONAL PRODUCT
PRODUCED BY AN AUTODESK EDUCATIONAL PRODUCT
PRODUCED BY AN AUTODESK EDUCATIONAL PRODUCT

PRODUCED BY AN AUTODESK EDUCATIONAL PRODUCT

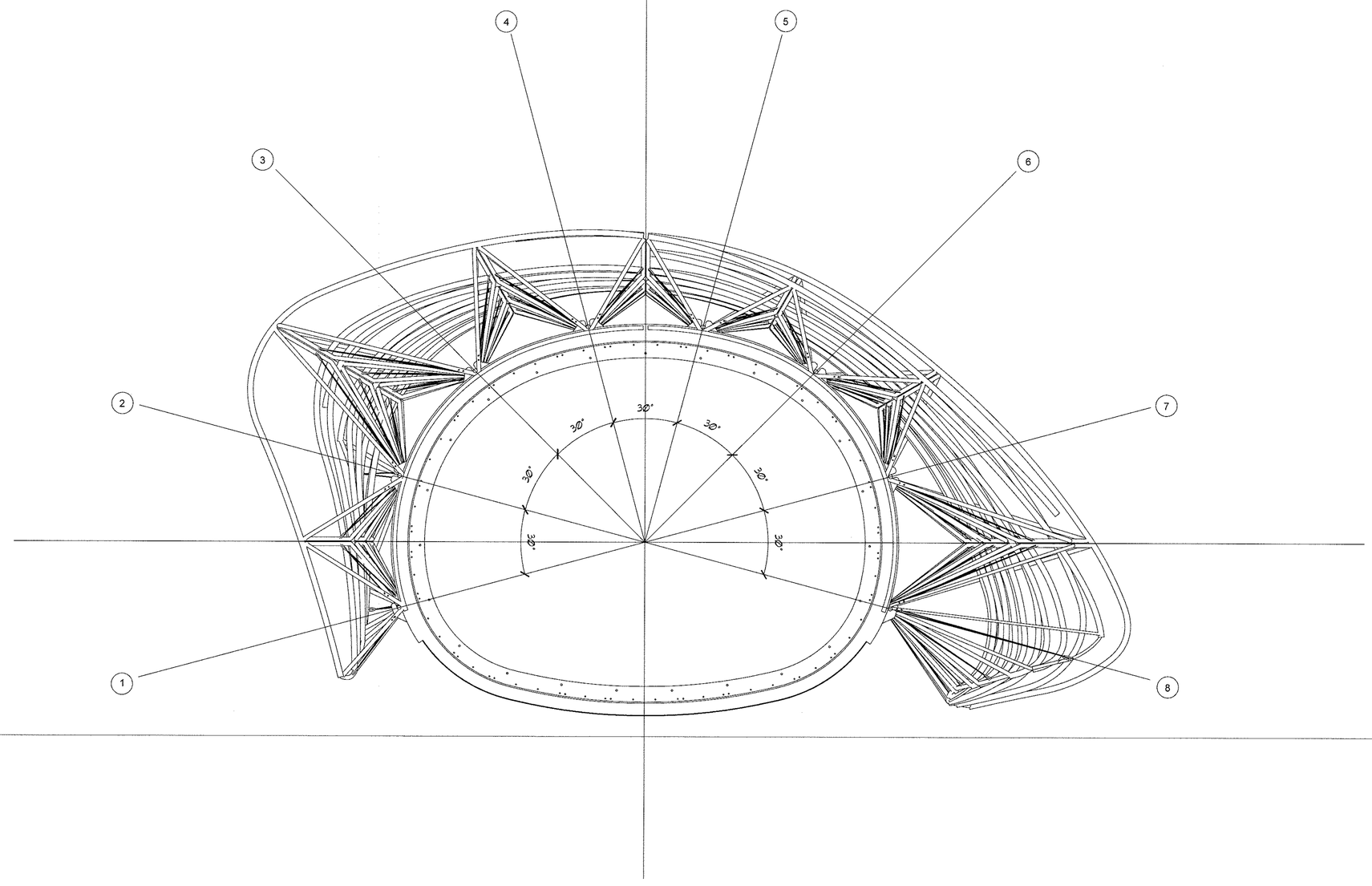

A1 West Framing Elevation

½" = 1' - 0"

0' 3" 6" 9"1'-0" 1'-6" 2'-0" 3'-0" 4'-0"

HALE PILIHONUA

TEAM NAME:

ADDRESS:

CONTACT:

CONSULTANTS

ARCHITECTURE:

ENGINEERS:

LANDSCAPING:

SAFETY FIRST CODE CONSULTANTS:

CLIENT

U.S. DEPARTMENT OF ENERGY

SOLAR DECATHLON 2011

WWW.SOLARDECATHLON.GOV

LOT NUMBER:

DRAWN BY: UNIVERSITY OF HAWAI'I

CHECKED BY:

COPYRIGHT: UNIVERSITY OF HAWAI'I SCHOOL OF ARCHITECTURE

SHEET TITLE

SUPERSTRUCTURE ELEVATIONS

SP-306

PRODUCED BY AN AUTODESK EDUCATIONAL PRODUCT

PRODUCED BY AN AUTODESK EDUCATIONAL PRODUCT

PRODUCED BY AN AUTODESK EDUCATIONAL PRODUCT

PRODUCED BY AN AUTODESK EDUCATIONAL PRODUCT

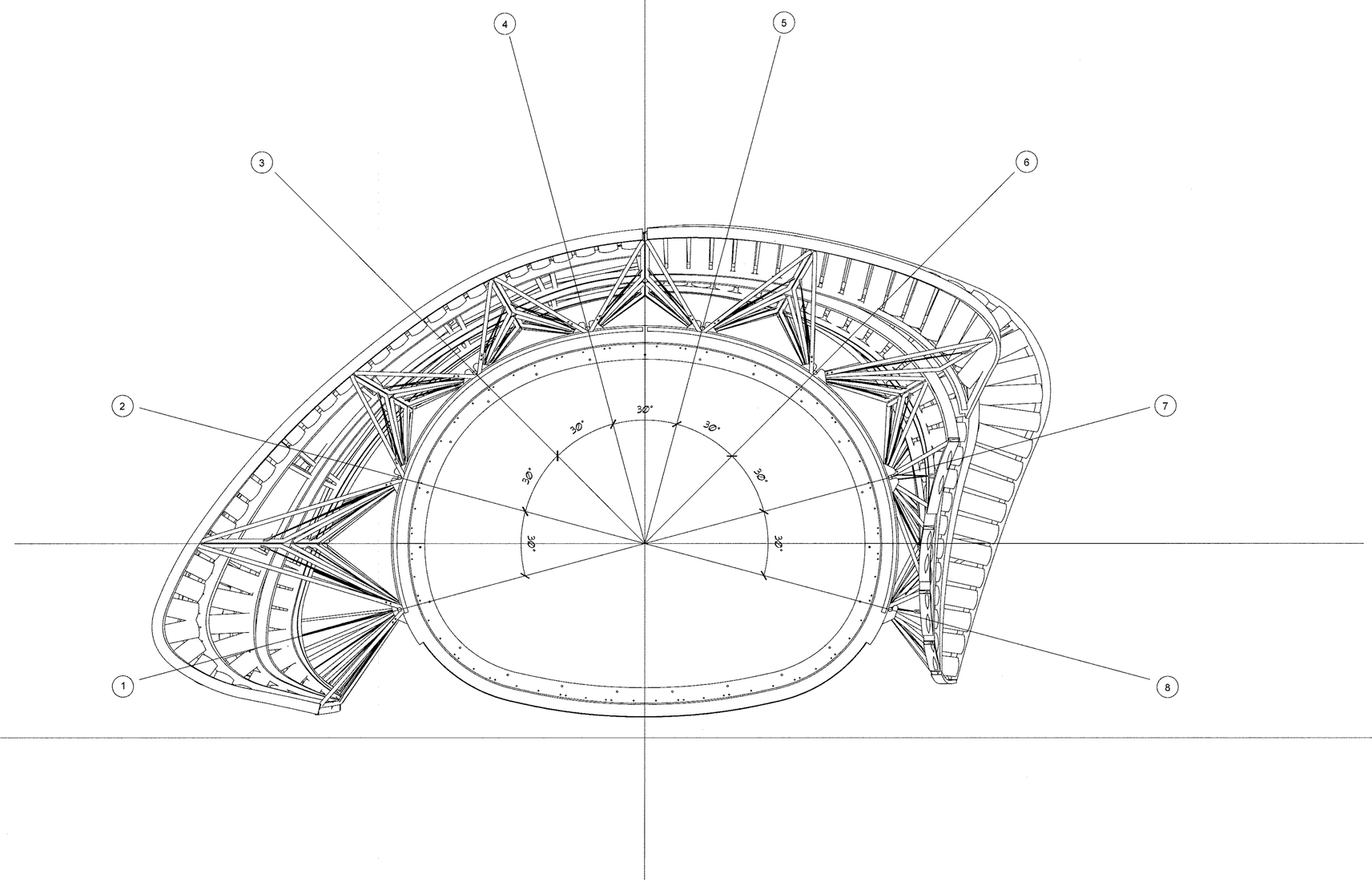

A1 East Elevation
½" = 1' - 0"

0' 3" 6" 9" 1'-0" 1'-6" 2'-0" 3'-0" 4'-0"

HALE PILIHONUA

TEAM NAME:
ADDRESS:
CONTACT:

CONSULTANTS
ARCHITECTURE:
ENGINEERS:
LANDSCAPING:
SAFETY FIRST CODE CONSULTANTS:

REGISTERED PROFESSIONAL ENGINEER JOHN A. WORLEY S 3448 EXP. 03/31/11 STRUCTURAL STATE OF CALIFORNIA

CLIENT
U.S. DEPARTMENT OF ENERGY
SOLAR DECATHLON 2011
WWW.SOLARDECATHLON.GOV

LOT NUMBER:
DRAWN BY: UNIVERSITY OF HAWAI'I
CHECKED BY:
COPYRIGHT: UNIVERSITY OF HAWAI'I SCHOOL OF ARCHITECTURE

SHEET TITLE
SUPERSTRUCTURE ELEVATIONS

SP-307

PRODUCED BY AN AUTODESK EDUCATIONAL PRODUCT
PRODUCED BY AN AUTODESK EDUCATIONAL PRODUCT
PRODUCED BY AN AUTODESK EDUCATIONAL PRODUCT

PRODUCED BY AN AUTODESK EDUCATIONAL PRODUCT

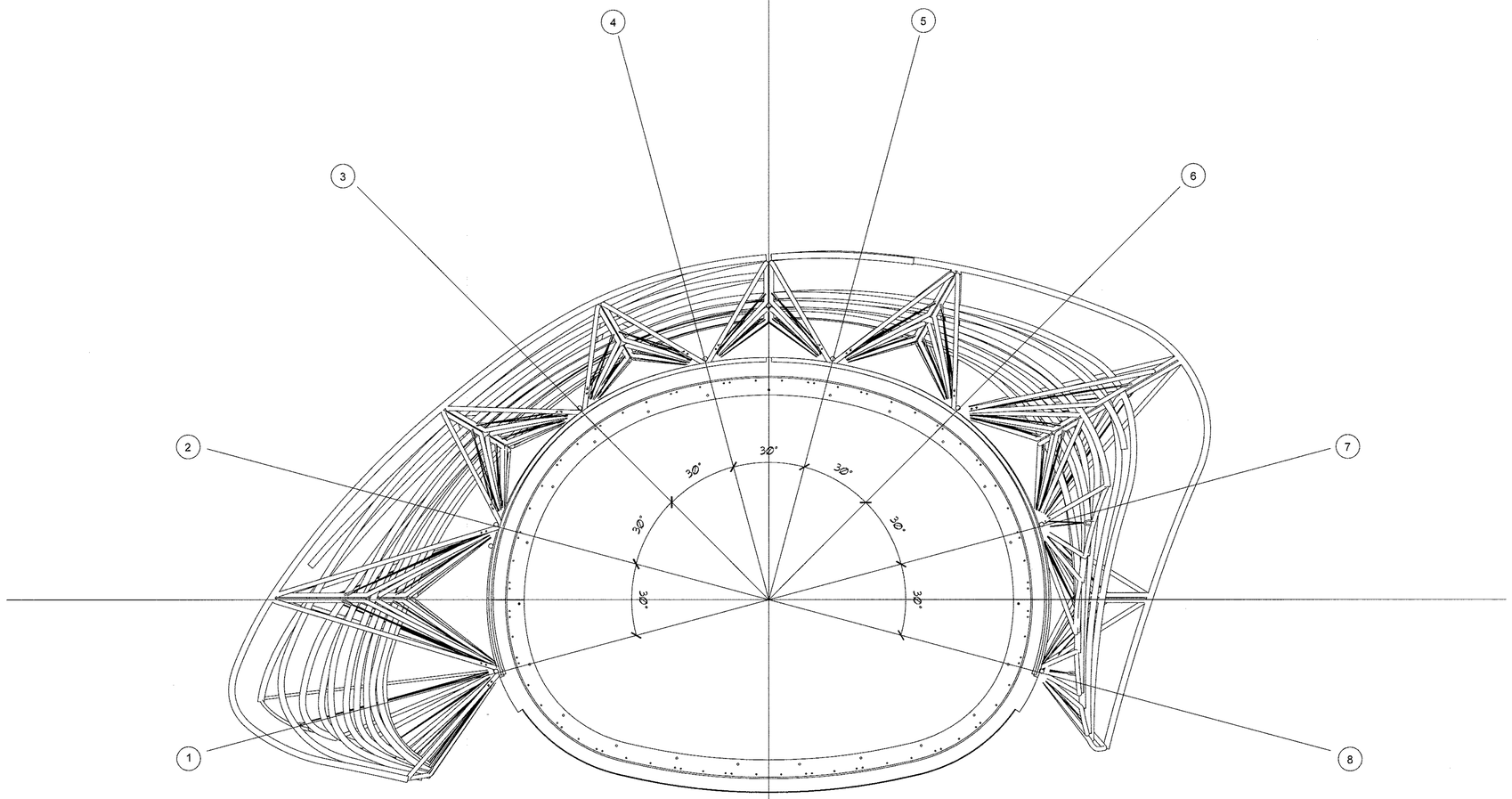

A1 East Framing Elevation
½" = 1' - 0"

0' 3" 6" 9" 1'-0" 1'-6" 2'-0" 3'-0" 4'-0"

HALE PILIHONUA

TEAM NAME:
ADDRESS:
CONTACT:

CONSULTANTS
ARCHITECTURE:
ENGINEERS:
LANDSCAPING:
SAFETY FIRST CODE CONSULTANTS:

REGISTERED PROFESSIONAL ENGINEER
JOHN A. WORLEY
S 3449
EXP. 02/31/11
STRUCTURAL
STATE OF CALIFORNIA

CLIENT
U.S. DEPARTMENT OF ENERGY
SOLAR DECATHLON 2011
WWW.SOLARDECATHLON.GOV

LOT NUMBER:
DRAWN BY: UNIVERSITY OF HAWAI'I
CHECKED BY:
COPYRIGHT: UNIVERSITY OF HAWAI'I SCHOOL OF ARCHITECTURE

SHEET TITLE
SUPERSTRUCTURE ELEVATIONS

SP-308

PRODUCED BY AN AUTODESK EDUCATIONAL PRODUCT
PRODUCED BY AN AUTODESK EDUCATIONAL PRODUCT
PRODUCED BY AN AUTODESK EDUCATIONAL PRODUCT

PRODUCED BY AN AUTODESK EDUCATIONAL PRODUCT

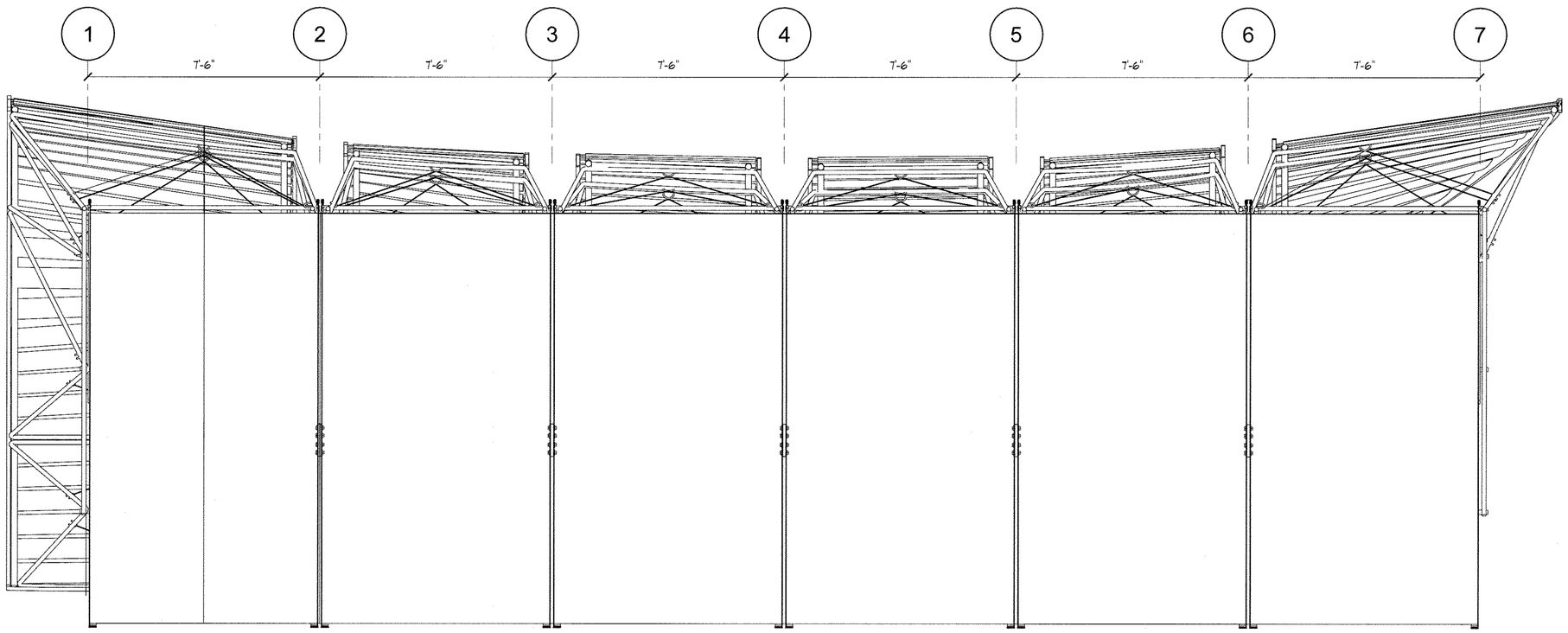

A1 Cross-Section A-A
½" = 1' - 0"

0' 3" 6" 9" 1'-0" 1'-6" 2'-0" 3'-0" 4'-0"

HALE PILIHONUA

TEAM NAME:
ADDRESS:
CONTACT:

CONSULTANTS
ARCHITECTURE:
ENGINEERS:
LANDSCAPING:
SAFETY FIRST CODE CONSULTANTS:

REGISTERED PROFESSIONAL ENGINEER
JOHN A. WORLEY
S 3449
EXP. 12/31/11
STRUCTURAL
STATE OF CALIFORNIA

CLIENT
U.S. DEPARTMENT OF ENERGY
SOLAR DECATHLON 2011
WWW.SOLARDECATHLON.GOV

LOT NUMBER:
DRAWN BY: UNIVERSITY OF HAWAI'I
CHECKED BY:
COPYRIGHT: UNIVERSITY OF HAWAI'I
SCHOOL OF ARCHITECTURE

SHEET TITLE
SUPERSTRUCTURE SECTIONS

SP-401

PRODUCED BY AN AUTODESK EDUCATIONAL PRODUCT
PRODUCED BY AN AUTODESK EDUCATIONAL PRODUCT
PRODUCED BY AN AUTODESK EDUCATIONAL PRODUCT

PRODUCED BY AN AUTODESK EDUCATIONAL PRODUCT

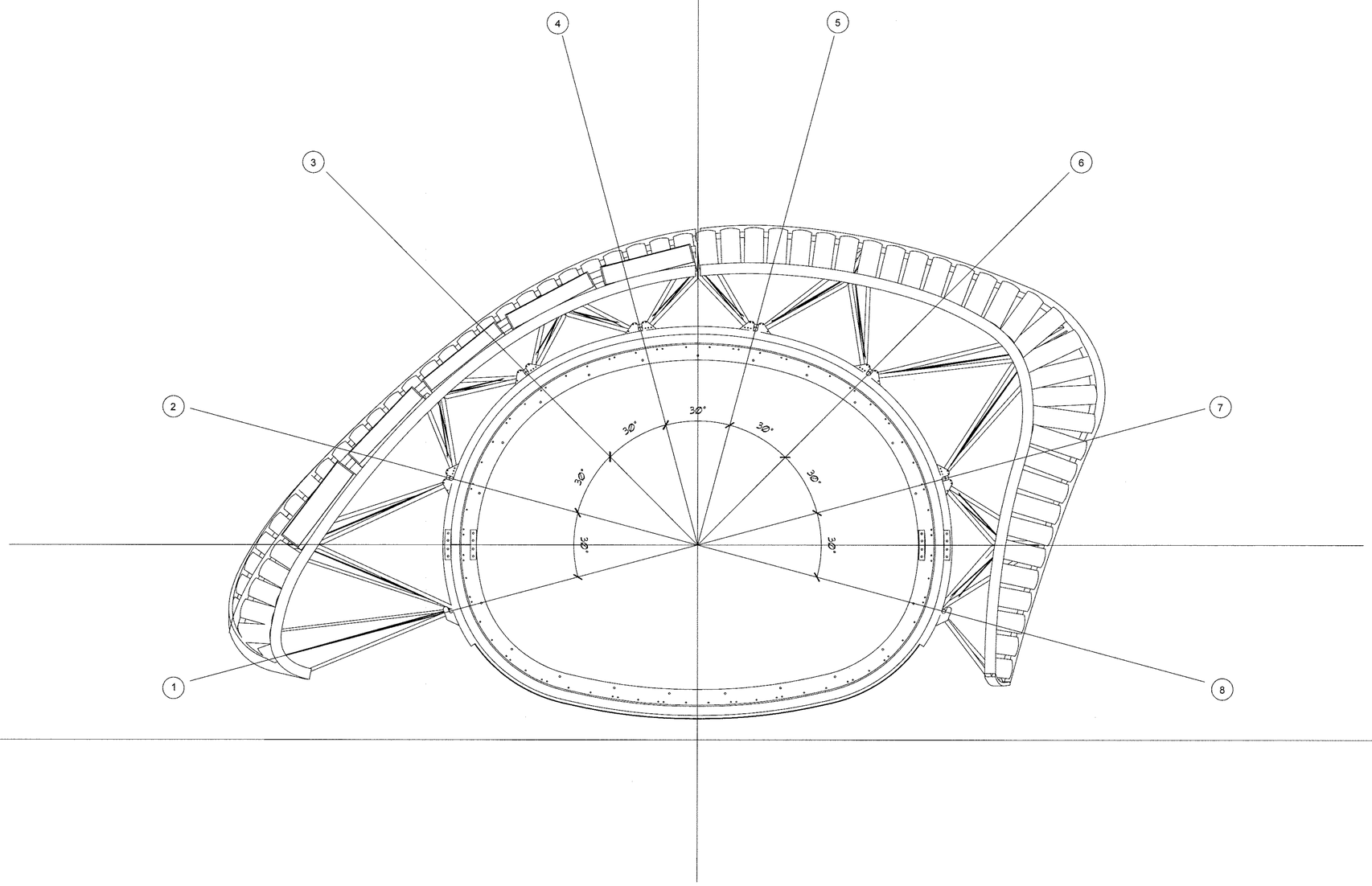

A1 Cross-Secion B-B
½" = 1' - 0"

0' 3"6" 9"1'-0" 1'-6" 2'-0" 3'-0" 4'-0"

HALE PILIHONUA

TEAM NAME:
ADDRESS:
CONTACT:

CONSULTANTS
ARCHITECTURE:
ENGINEERS:
LANDSCAPING:
SAFETY FIRST CODE CONSULTANTS:

CLIENT
U.S. DEPARTMENT OF ENERGY
SOLAR DECATHLON 2011
WWW.SOLARDECATHLON.GOV

LOT NUMBER:
DRAWN BY: UNIVERSITY OF HAWAI'I
CHECKED BY:
COPYRIGHT: UNIVERSITY OF HAWAI'I SCHOOL OF ARCHITECTURE

SHEET TITLE
SUPERSTRUCTURE SECTIONS

SP-402

PRODUCED BY AN AUTODESK EDUCATIONAL PRODUCT
PRODUCED BY AN AUTODESK EDUCATIONAL PRODUCT
PRODUCED BY AN AUTODESK EDUCATIONAL PRODUCT

PRODUCED BY AN AUTODESK EDUCATIONAL PRODUCT

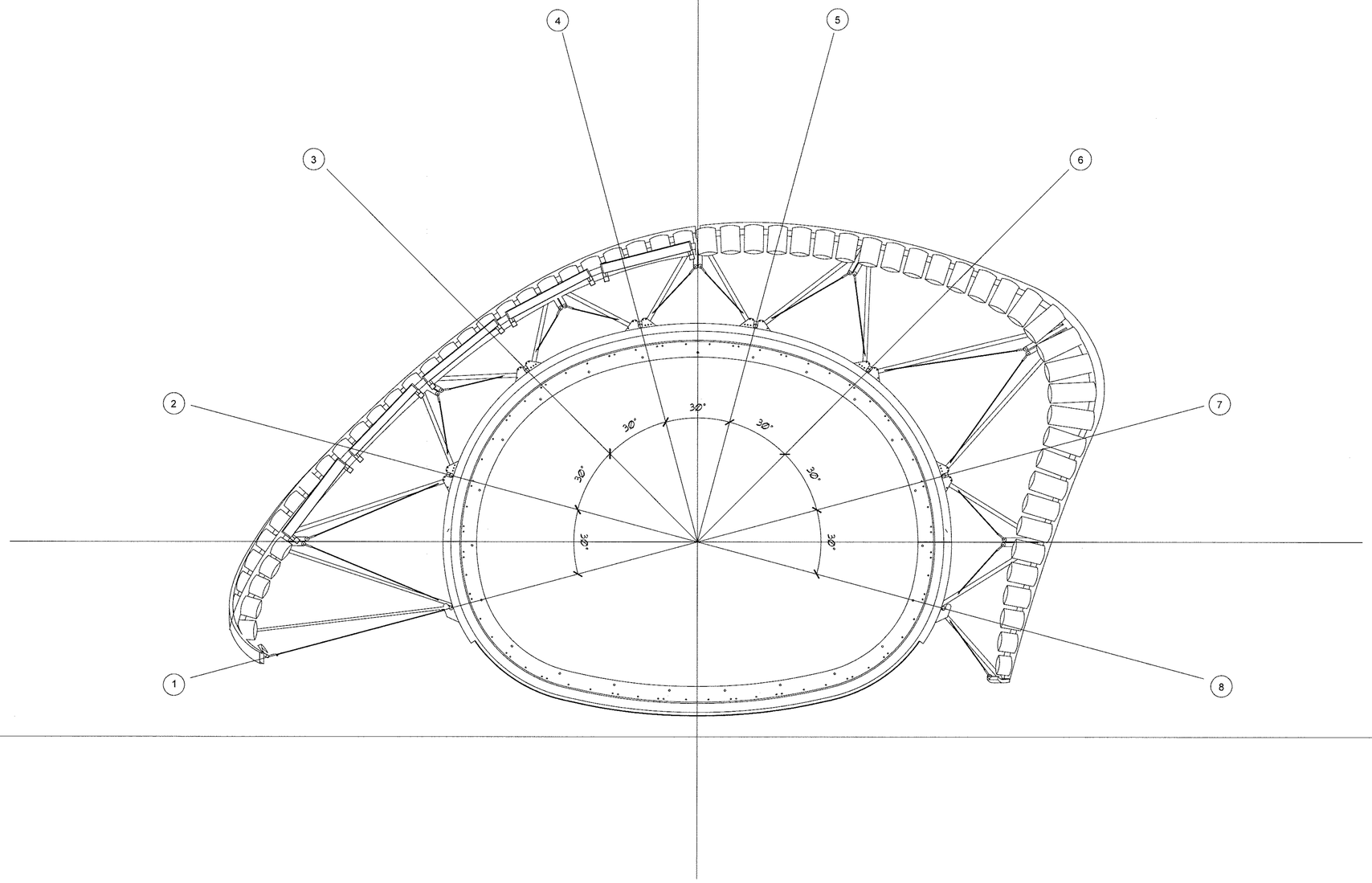

A1 Cross-Section C-C
½" = 1' - 0"

0' 3" 6" 9" 1'-0" 1'-6" 2'-0" 3'-0" 4'-0"

HALE PILIHONUA

TEAM NAME:
ADDRESS:
CONTACT:

CONSULTANTS
ARCHITECTURE:
ENGINEERS:
LANDSCAPING:
SAFETY FIRST CODE CONSULTANTS:

REGISTERED PROFESSIONAL ENGINEER
3440
EXP. 03/31/11
STRUCTURAL
STATE OF CALIFORNIA

CLIENT
U.S. DEPARTMENT OF ENERGY
SOLAR DECATHLON 2011
WWW.SOLARDECATHLON.GOV

LOT NUMBER:
DRAWN BY: UNIVERSITY OF HAWAI'I
CHECKED BY:
COPYRIGHT: UNIVERSITY OF HAWAI'I SCHOOL OF ARCHITECTURE

SHEET TITLE
SUPERSTRUCTURE SECTIONS

SP-403

PRODUCED BY AN AUTODESK EDUCATIONAL PRODUCT
PRODUCED BY AN AUTODESK EDUCATIONAL PRODUCT
PRODUCED BY AN AUTODESK EDUCATIONAL PRODUCT

PRODUCED BY AN AUTODESK EDUCATIONAL PRODUCT

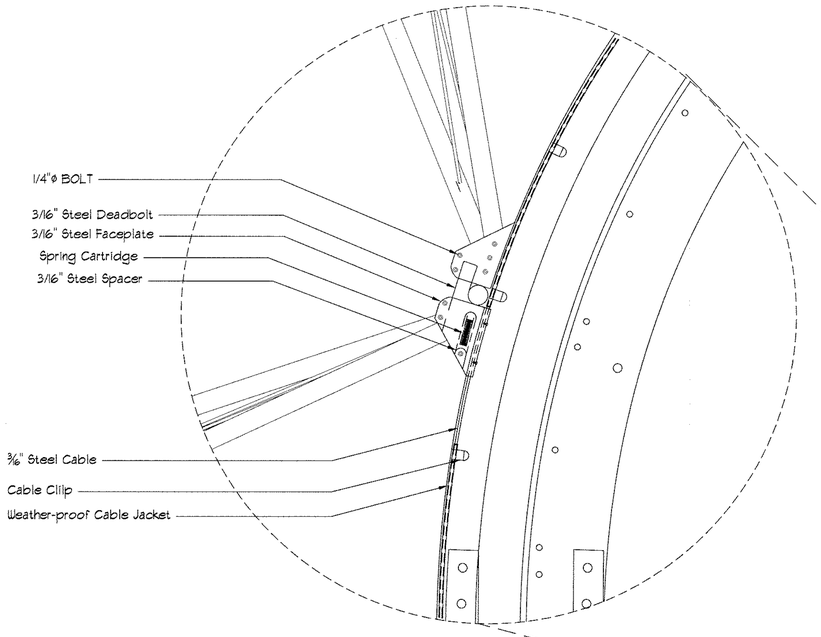

A1 TYPICAL UPPER CONNECTION DETAIL
3" = 1' - 0"

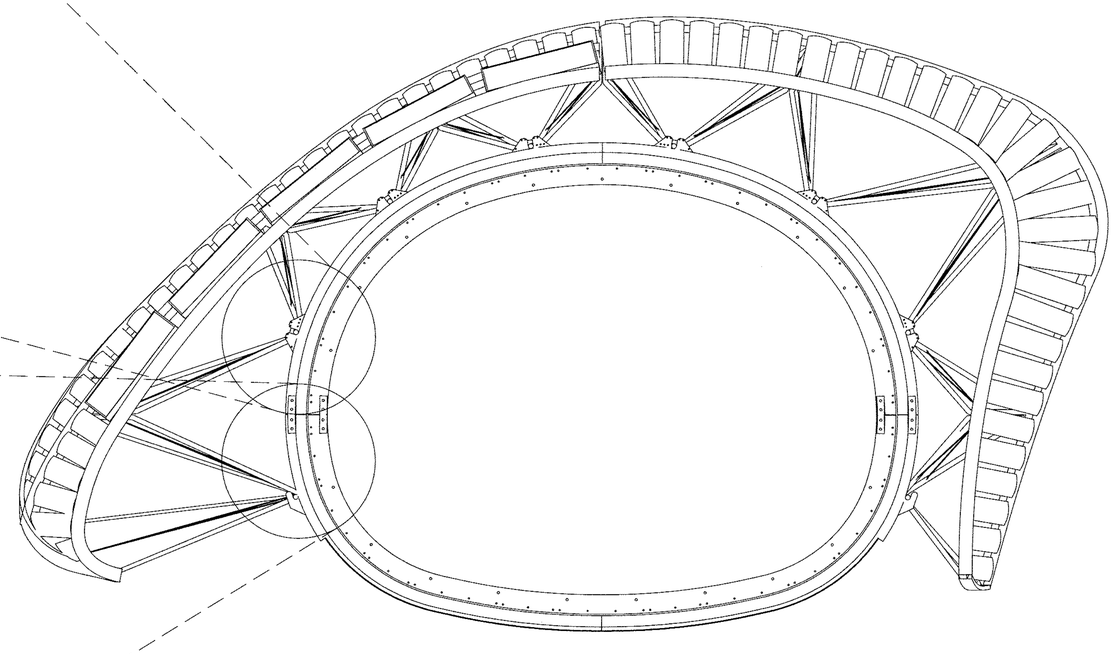

A1 CROSS-SECTION B-B
1/2" = 1' - 0"

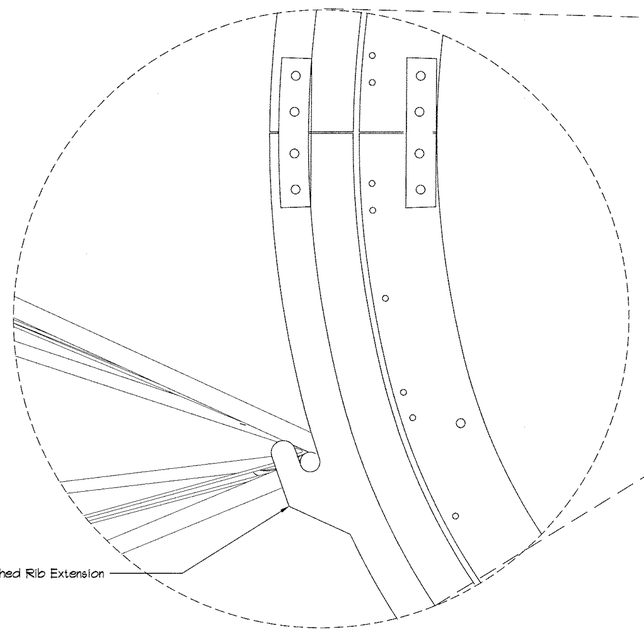

A1 BOTTOM CONNECTION DETAIL
2" = 1' - 0"

HALE PILIHONUA

TEAM NAME:
ADDRESS:
CONTACT:

CONSULTANTS
ARCHITECTURE:
ENGINEERS:
LANDSCAPING:
SAFETY FIRST CODE CONSULTANTS:

CLIENT
U.S. DEPARTMENT OF ENERGY
SOLAR DECATHLON 2011
WWW.SOLARDECATHLON.GOV

LOT NUMBER:
DRAWN BY: UNIVERSITY OF HAWAI'I
CHECKED BY:
COPYRIGHT: UNIVERSITY OF HAWAI'I SCHOOL OF ARCHITECTURE

SHEET TITLE
SUPERSTRUCTURE MOUNTING DETAILS

S-501

PRODUCED BY AN AUTODESK EDUCATIONAL PRODUCT
PRODUCED BY AN AUTODESK EDUCATIONAL PRODUCT
PRODUCED BY AN AUTODESK EDUCATIONAL PRODUCT

PRODUCED BY AN AUTODESK EDUCATIONAL PRODUCT

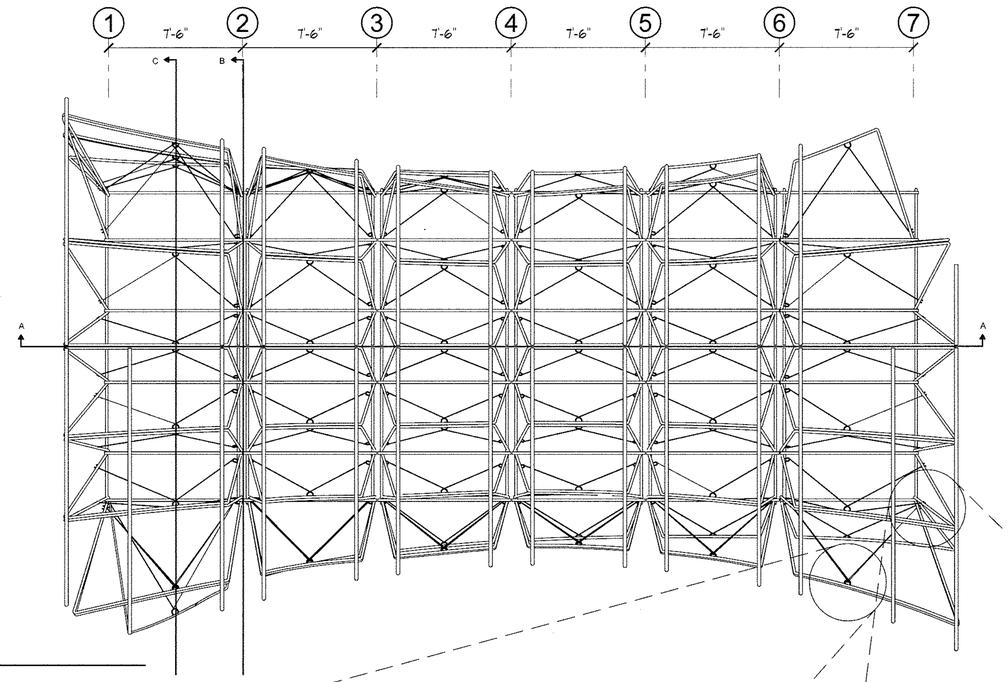

A1 FRAMING PLAN
¼" = 1' - 0"

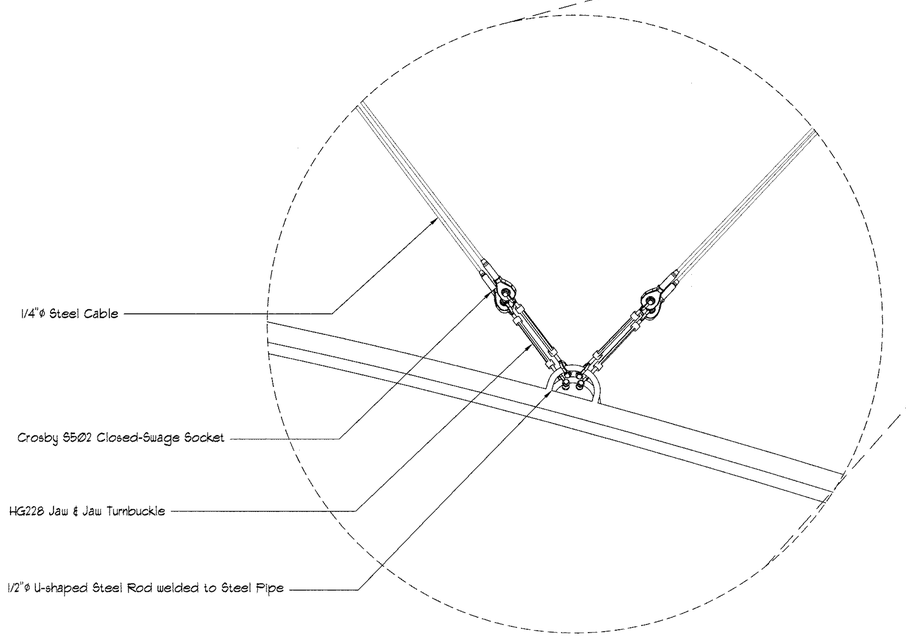

A1 CABLE CONNECTION DETAIL
2" = 1' - 0"

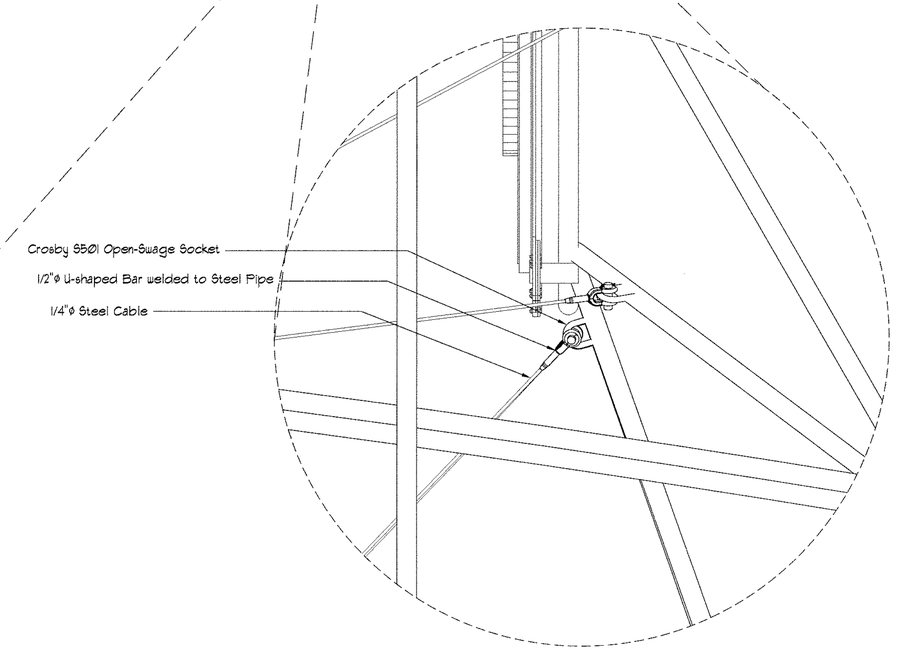

A1 CABLE CONNECTION DETAIL
2" = 1' - 0"

HALE PILIHONUA

TEAM NAME:
ADDRESS:
CONTACT:

CONSULTANTS
ARCHITECTURE:
ENGINEERS:
LANDSCAPING:
SAFETY FIRST CODE CONSULTANTS:

CLIENT
U.S. DEPARTMENT OF ENERGY
SOLAR DECATHLON 2011
WWW.SOLARDECATHLON.GOV

LOT NUMBER:
DRAWN BY: UNIVERSITY OF HAWAI'I
CHECKED BY:
COPYRIGHT: UNIVERSITY OF HAWAI'I SCHOOL OF ARCHITECTURE

SHEET TITLE
SUPERSTRUCTURE MOUNTING DETAILS

S-502

PRODUCED BY AN AUTODESK EDUCATIONAL PRODUCT
PRODUCED BY AN AUTODESK EDUCATIONAL PRODUCT
PRODUCED BY AN AUTODESK EDUCATIONAL PRODUCT

PRODUCED BY AN AUTODESK EDUCATIONAL PRODUCT

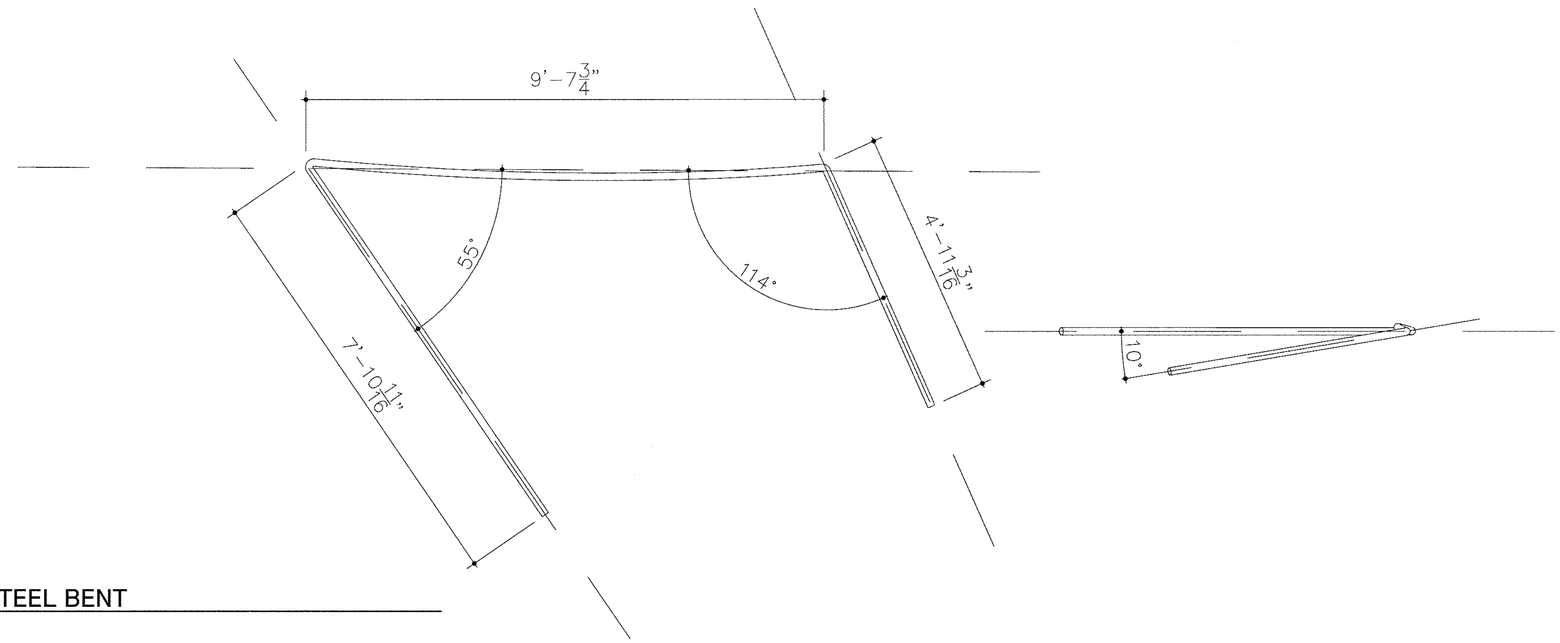

A1 TYPICAL STEEL BENT
3/4" = 1' - 0"

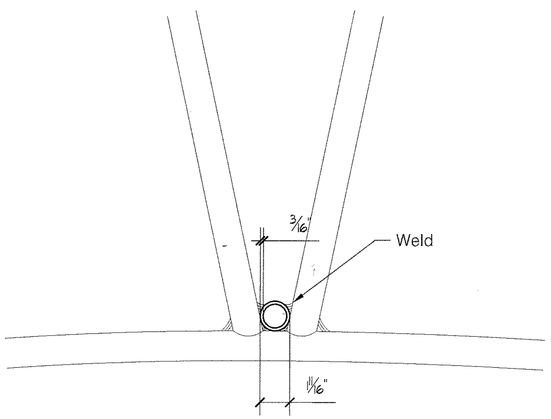

A1 LOWER WELDED CONNECTION DETAIL
3" = 1' - 0"

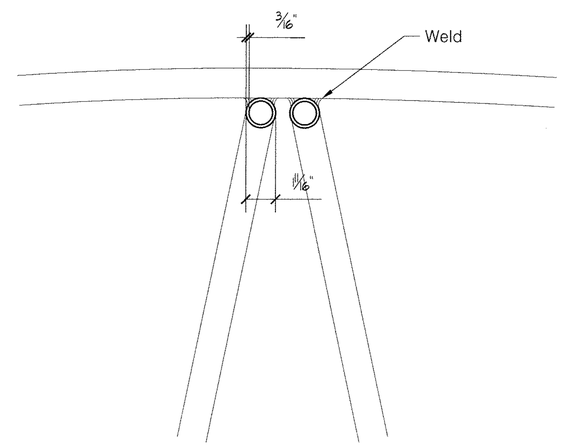

A1 UPPER WELDED CONNECTION DETAIL
3" = 1' - 0"

HALE PILIHONUA

TEAM NAME:
ADDRESS:
CONTACT:

CONSULTANTS
ARCHITECTURE:
ENGINEERS:
LANDSCAPING:
SAFETY FIRST CODE CONSULTANTS:

CLIENT
U.S. DEPARTMENT OF ENERGY
SOLAR DECATHLON 2011
WWW.SOLARDECATHLON.GOV

LOT NUMBER:
DRAWN BY: UNIVERSITY OF HAWAI'I
CHECKED BY:
COPYRIGHT: UNIVERSITY OF HAWAI'I SCHOOL OF ARCHITECTURE

SHEET TITLE
STEEL PIPE CONNECTION DETAILS

S-503

PRODUCED BY AN AUTODESK EDUCATIONAL PRODUCT
PRODUCED BY AN AUTODESK EDUCATIONAL PRODUCT
PRODUCED BY AN AUTODESK EDUCATIONAL PRODUCT

PRODUCED BY AN AUTODESK EDUCATIONAL PRODUCT

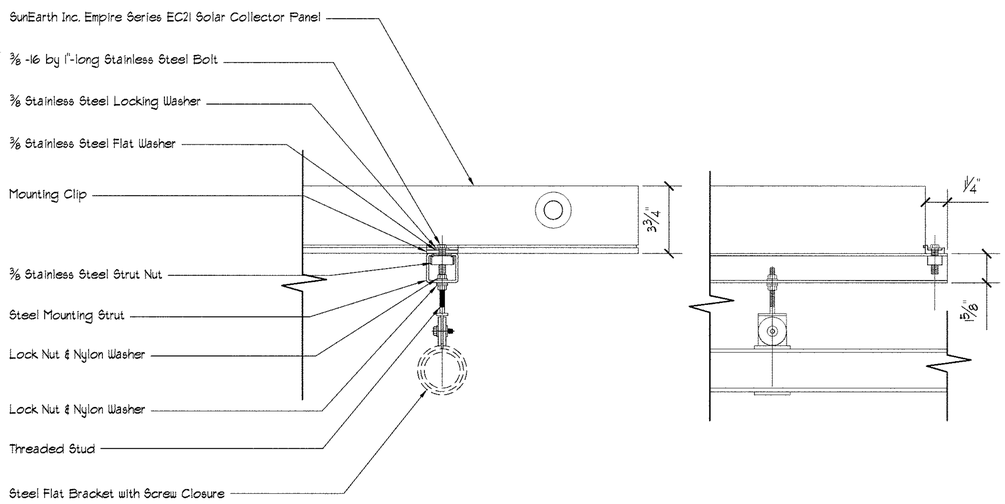

A1 SDHW COLLECTOR PANEL MOUNTING DETAIL
3" = 1' - 0"

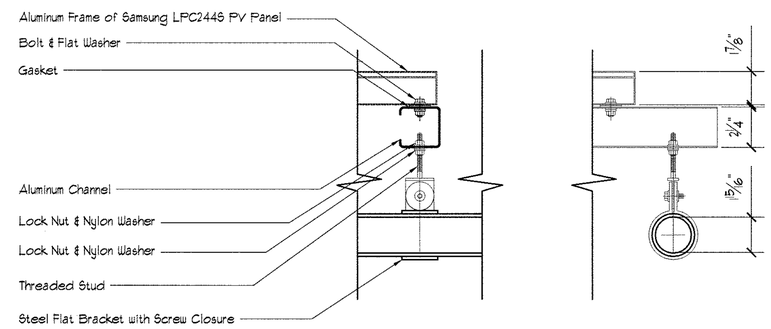

A1 PHOTOVOLTAIC PANEL MOUNTING DETAIL
3" = 1' - 0"

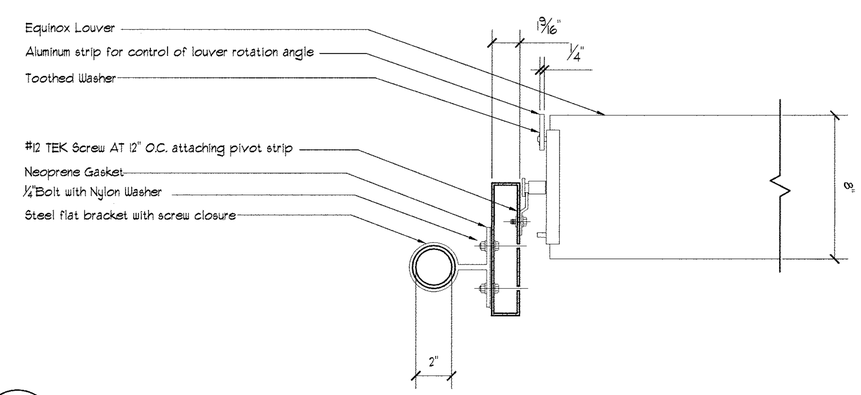

A1 LOUVER MOUNTING DETAIL
3" = 1' - 0"

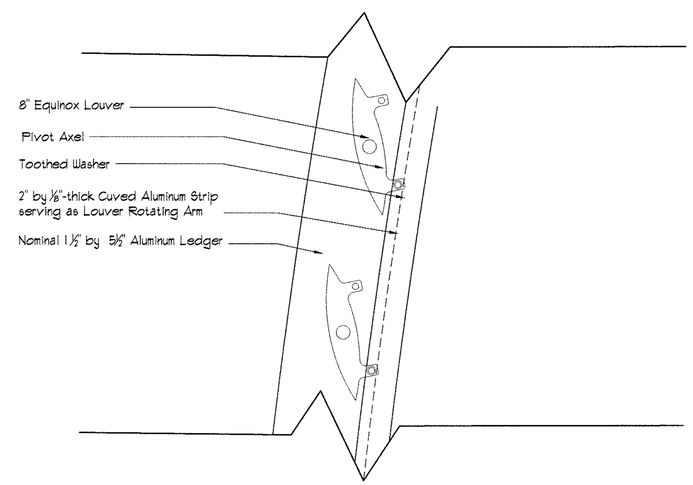

A1 LOUVER MOUNTING DETAIL
3" = 1' - 0"

HALE PILIHONUA

TEAM NAME:
ADDRESS:
CONTACT:

CONSULTANTS
ARCHITECTURE:
ENGINEERS:
LANDSCAPING:
SAFETY FIRST CODE CONSULTANTS:

CLIENT
U.S. DEPARTMENT OF ENERGY
SOLAR DECATHLON 2011
WWW.SOLARDECATHLON.GOV

LOT NUMBER:
DRAWN BY: UNIVERSITY OF HAWAI'I
CHECKED BY:
COPYRIGHT: UNIVERSITY OF HAWAI'I SCHOOL OF ARCHITECTURE

SHEET TITLE
CONNECTION DETAILS

S-504

PRODUCED BY AN AUTODESK EDUCATIONAL PRODUCT
PRODUCED BY AN AUTODESK EDUCATIONAL PRODUCT
PRODUCED BY AN AUTODESK EDUCATIONAL PRODUCT

PRODUCED BY AN AUTODESK EDUCATIONAL PRODUCT

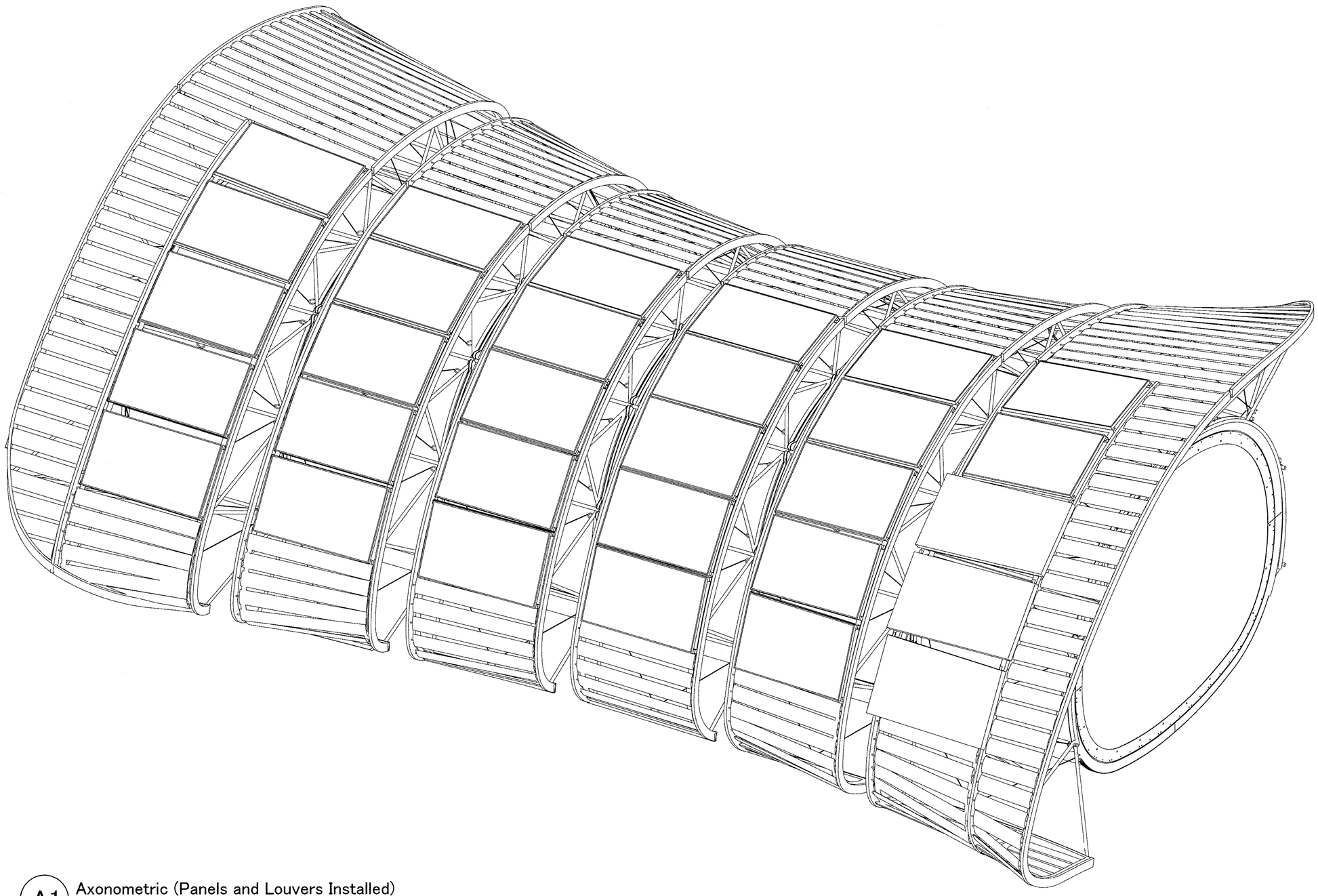

A1 Axonometric (Panels and Louvers Installed)
½" = 1' - 0"

HALE PILIHONUA

TEAM NAME:
ADDRESS:
CONTACT:

CONSULTANTS
ARCHITECTURE:
ENGINEERS:
LANDSCAPING:
SAFETY FIRST CODE CONSULTANTS:

REGISTERED PROFESSIONAL ENGINEER
JOHN A. WORLEY
S 3449
EXP. 03/31/11
STRUCTURAL
STATE OF CALIFORNIA

CLIENT
U.S. DEPARTMENT OF ENERGY
SOLAR DECATHLON 2011
WWW.SOLARDECATHLON.GOV

LOT NUMBER:
DRAWN BY: UNIVERSITY OF HAWAI'I
CHECKED BY:
COPYRIGHT: UNIVERSITY OF HAWAI'I SCHOOL OF ARCHITECTURE

SHEET TITLE
SUPERSTRUCTURE AXONOMETRIC

SP-601

PRODUCED BY AN AUTODESK EDUCATIONAL PRODUCT
PRODUCED BY AN AUTODESK EDUCATIONAL PRODUCT
PRODUCED BY AN AUTODESK EDUCATIONAL PRODUCT

PRODUCED BY AN AUTODESK EDUCATIONAL PRODUCT

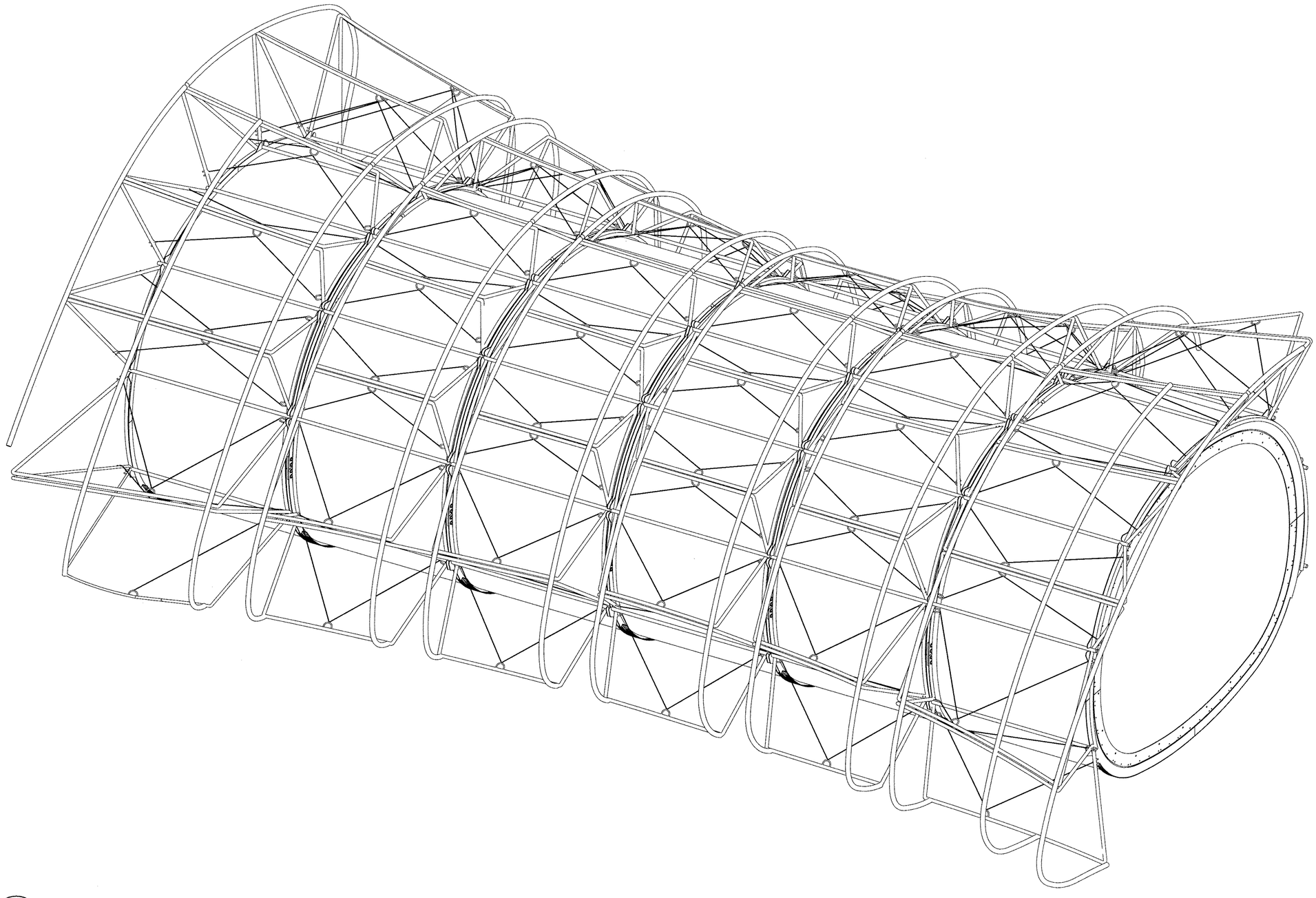

A1 Axonometric (Panels and Louvers Uninstalled)
½" = 1' - 0"

HALE PILIHONUA

TEAM NAME:
ADDRESS:
CONTACT:

CONSULTANTS
ARCHITECTURE:
ENGINEERS:
LANDSCAPING:
SAFETY FIRST CODE CONSULTANTS:

CLIENT
U.S. DEPARTMENT OF ENERGY
SOLAR DECATHLON 2011
WWW.SOLARDECATHLON.GOV

LOT NUMBER:
DRAWN BY: UNIVERSITY OF HAWAI'I
CHECKED BY:
COPYRIGHT: UNIVERSITY OF HAWAI'I
SCHOOL OF ARCHITECTURE

SHEET TITLE
SUPERSTRUCTURE AXONOMETRIC

SP-602

PRODUCED BY AN AUTODESK EDUCATIONAL PRODUCT
PRODUCED BY AN AUTODESK EDUCATIONAL PRODUCT
PRODUCED BY AN AUTODESK EDUCATIONAL PRODUCT

PRODUCED BY AN AUTODESK EDUCATIONAL PRODUCT

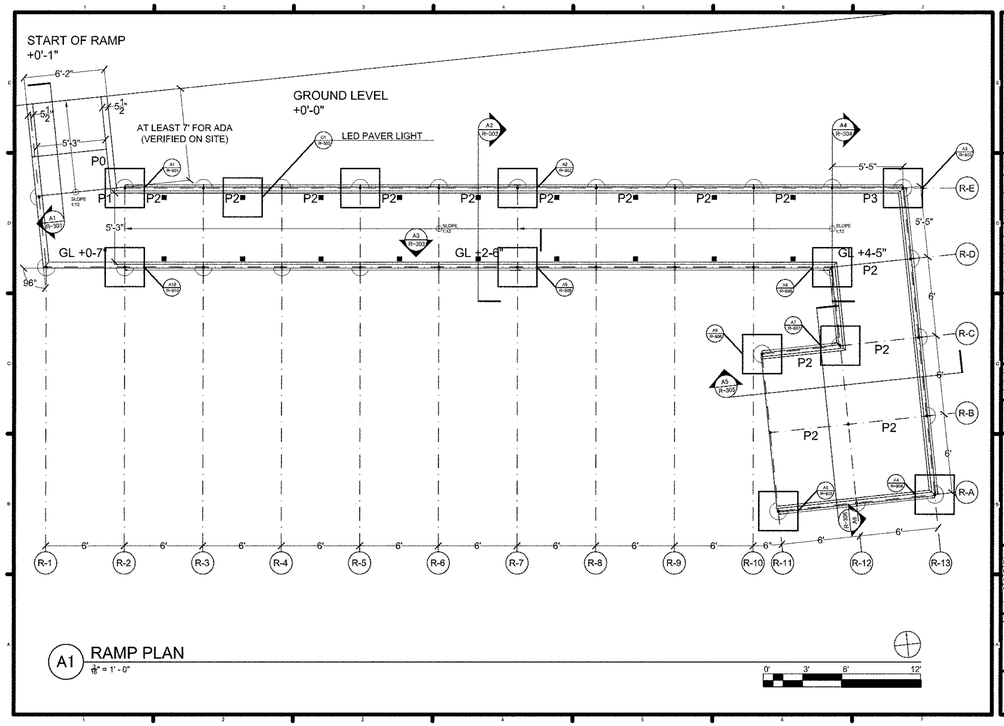

A1 RAMP PLAN
3/16" = 1' - 0"

HALE PILIHONUA

TEAM NAME:
ADDRESS:
CONTACT:
CONSULTANTS
ARCHITECTURE
ENGINEERS:
LANDSCAPING
SAFETY FIRST CODE CONSULTANTS:

CLIENT
U.S. DEPARTMENT OF ENERGY
SOLAR DECATHLON 2011
WWW.SOLARDECATHLON.GOV

LOT NUMBER:
DRAWN BY: UNIVERSITY OF HAWAII
CHECKED BY:
COPYRIGHT: UNIVERSITY OF HAWAII SCHOOL OF ARCHITECTURE

SHEET TITLE
RAMP PLAN

R-101

PRODUCED BY AN AUTODESK EDUCATIONAL PRODUCT

PRODUCED BY AN AUTODESK EDUCATIONAL PRODUCT

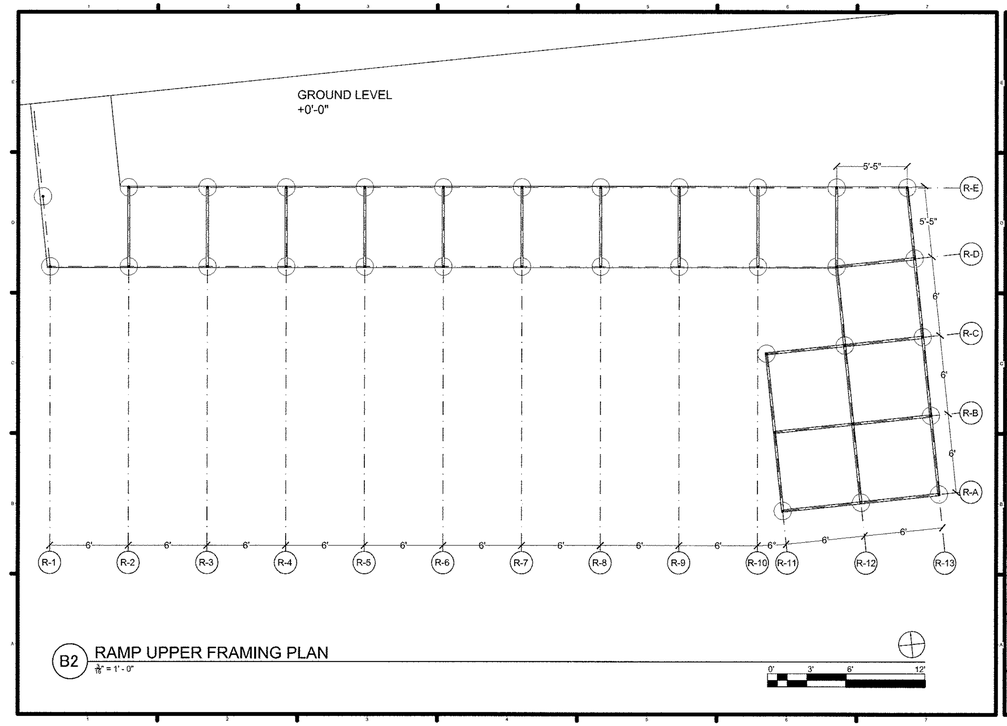

B2 RAMP UPPER FRAMING PLAN
3/16" = 1' - 0"

HALE PILIHONUA

TEAM NAME:
ADDRESS:
CONTACT:
CONSULTANTS
ARCHITECTURE
ENGINEERS:
LANDSCAPING
SAFETY FIRST CODE CONSULTANTS:

CLIENT
U.S. DEPARTMENT OF ENERGY
SOLAR DECATHLON 2011
WWW.SOLARDECATHLON.GOV

LOT NUMBER:
DRAWN BY: UNIVERSITY OF HAWAII
CHECKED BY:
COPYRIGHT: UNIVERSITY OF HAWAII SCHOOL OF ARCHITECTURE

SHEET TITLE
RAMP UPPER FRAMING PLAN

R-103

PRODUCED BY AN AUTODESK EDUCATIONAL PRODUCT

PRODUCED BY AN AUTODESK EDUCATIONAL PRODUCT

PAGE	SHEET NO.	TITLE	SCALE
1	R-101	RAMP PLAN	3/16" = 1'-0"
2	R-102	RAMP LOWER FRAMING PLAN	3/16" = 1'-0"
3	R-103	RAMP UPPER FRAMING PLAN	3/16" = 1'-0"
4	R-201	RAMP NORTH ELEVATION	3/16" = 1'-0"
5	R-202	RAMP SOUTH ELEVATION	3/16" = 1'-0"
6	R-203	RAMP EAST ELEVATION	3/16" = 1'-0"
7	R-301	SECTION A-A'	1" = 1'-0"
8	R-302	SECTION B-B'	1" = 1'-0"
9	R-303	SECTION C-C'	1" = 1'-0"
10	R-304	SECTION D-D'	1" = 1'-0"
11	R-305	SECTION E-E'	1" = 1'-0"
12	R-306	SECTION F-F'	1" = 1'-0"
13	R-307	MECHANICAL SERVICE DOOR	1" = 1'-0"
14	R-401	PANEL TYPE - P1	3" = 1'-0"
15	R-402	PANEL TYPE - P2	3" = 1'-0"
16	R-403	PANEL TYPE - P3	3" = 1'-0"
17	R-404	PANEL TYPE - P4	3" = 1'-0"
18	R-501	RAMP FOOTING DETAIL	3" = 1'-0"
19	R-502	RAMP HANDRAIL END DETAIL	3" = 1'-0"
20	R-503	RAMP HANDRAIL SECTION DETAIL	3" = 1'-0"
21	R-504	RAMP HANDRAIL SPLICE DETAIL	3" = 1'-0"
22	R-505	LED PAVER LIGHT	3" = 1'-0"
23	R-506	LED PAVER LIGHT DETAIL	3" = 1'-0"
24	R-507	FRP DETAIL FOR MECHANICAL DOOR	3" = 1'-0"
25	R-508	FRP PANEL DETAIL PLAN	3" = 1'-0"
26	R-601	RAMP DECKING DETAIL AT R-2	3" = 1'-0"
27	R-602	RAMP DECKING DETAIL AT R-6	3" = 1'-0"
28	R-603	RAMP DECKING DETAIL AT R-7	3" = 1'-0"
29	R-604	RAMP DECKING DETAIL AT R-12	3" = 1'-0"

PAGE	SHEET NO.	TITLE	SCALE
30	R-801	RAMP WIRE DETAIL AT R-E2	3" = 1'-0"
31	R-802	RAMP WIRE DETAIL AT R-E7	3" = 1'-0"
32	R-803	RAMP WIRE DETAIL AT R-E13	3" = 1'-0"
33	R-804	RAMP WIRE DETAIL AT R-A13	3" = 1'-0"
34	R-805	RAMP WIRE DETAIL AT R-A11	3" = 1'-0"
35	R-806	RAMP WIRE DETAIL AT R-C11	3" = 1'-0"
36	R-807	RAMP WIRE DETAIL AT R-C12	3" = 1'-0"
37	R-808	RAMP WIRE DETAIL AT R-D12	3" = 1'-0"
38	R-809	RAMP WIRE DETAIL AT R-D7	3" = 1'-0"
39	R-810	RAMP WIRE DETAIL AT R-D2	3" = 1'-0"
40	R-811	RAMP WIRE DETAIL AT THREADED PLATE	3" = 1'-0"
41	R-812	WIRE SPECIAL DETAIL	3" = 1'-0"
42	R-813	WIRE DETAIL FOR MECHANICAL DOOR	3" = 1'-0"

HALE PILIHONUA

TEAM NAME:
ADDRESS:
CONTACT:
CONSULTANTS
ARCHITECTURE:
ENGINEERS:
LANDSCAPING:
SAFETY FIRST CODE CONSULTANTS:

CLIENT
U.S. DEPARTMENT OF ENERGY
SOLAR DECATHLON 2011
WWW.SOLARDECATHLON.GOV

LOT NUMBER:
DRAWN BY: UNIVERSITY OF HAWAII
CHECKED BY:
COPYRIGHT: UNIVERSITY OF HAWAII SCHOOL OF ARCHITECTURE

SHEET TITLE
MASTER SHEET

R-100

PRODUCED BY AN AUTODESK EDUCATIONAL PRODUCT

PRODUCED BY AN AUTODESK EDUCATIONAL PRODUCT

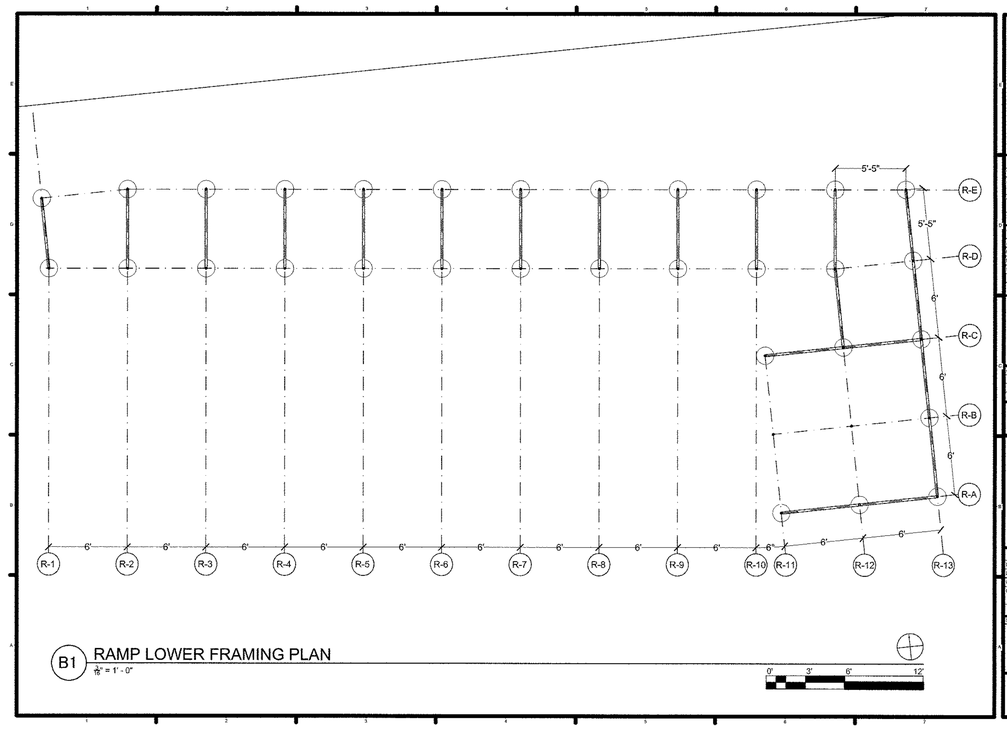

B1 RAMP LOWER FRAMING PLAN
3/16" = 1' - 0"

HALE PILIHONUA

TEAM NAME:
ADDRESS:
CONTACT:
CONSULTANTS
ARCHITECTURE:
ENGINEERS:
LANDSCAPING:
SAFETY FIRST CODE CONSULTANTS:

CLIENT
U.S. DEPARTMENT OF ENERGY
SOLAR DECATHLON 2011
WWW.SOLARDECATHLON.GOV

LOT NUMBER:
DRAWN BY: UNIVERSITY OF HAWAII
CHECKED BY:
COPYRIGHT: UNIVERSITY OF HAWAII SCHOOL OF ARCHITECTURE

SHEET TITLE
RAMP LOWER FRAMING PLAN

R-102

PRODUCED BY AN AUTODESK EDUCATIONAL PRODUCT

PRODUCED BY AN AUTODESK EDUCATIONAL PRODUCT

REGISTERED PROFESSIONAL ENGINEER
LAURA A. WOLFE
C 55449
EXP. 03/31/11
STRUCTURAL
STATE OF CALIFORNIA

PRODUCED BY AN AUTODESK EDUCATIONAL PRODUCT

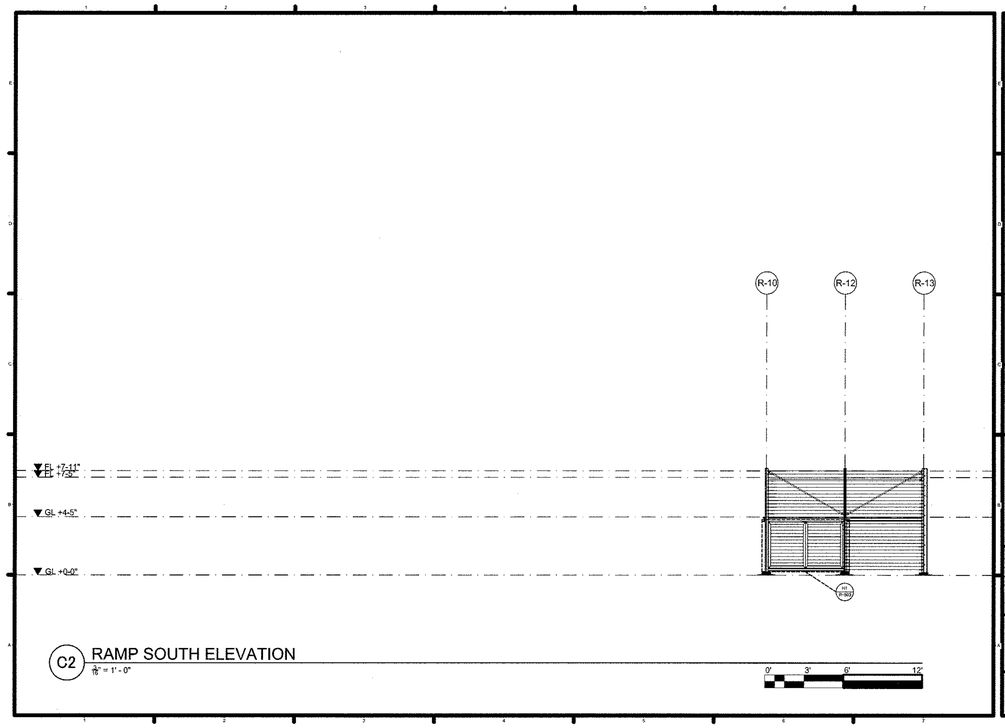

C2 RAMP SOUTH ELEVATION
1/8" = 1' - 0"

HALE PILIHONUA

TEAM NAME:
ADDRESS:
CONTACT:
CONSULTANTS:
ARCHITECTURE:
ENGINEERS:
LANDSCAPING:
SAFETY FIRST CODE CONSULTANTS:
CLIENT
U.S. DEPARTMENT OF ENERGY
SOLAR DECATHLON 2011
WWW.SOLARDECATHLON.GOV
LOT NUMBER:
DRAWN BY: UNIVERSITY OF HAWAII
CHECKED BY:
COPYRIGHT: UNIVERSITY OF HAWAII SCHOOL OF ARCHITECTURE
SHEET TITLE
RAMP SOUTH ELEVATION
R-202

PRODUCED BY AN AUTODESK EDUCATIONAL PRODUCT

PRODUCED BY AN AUTODESK EDUCATIONAL PRODUCT

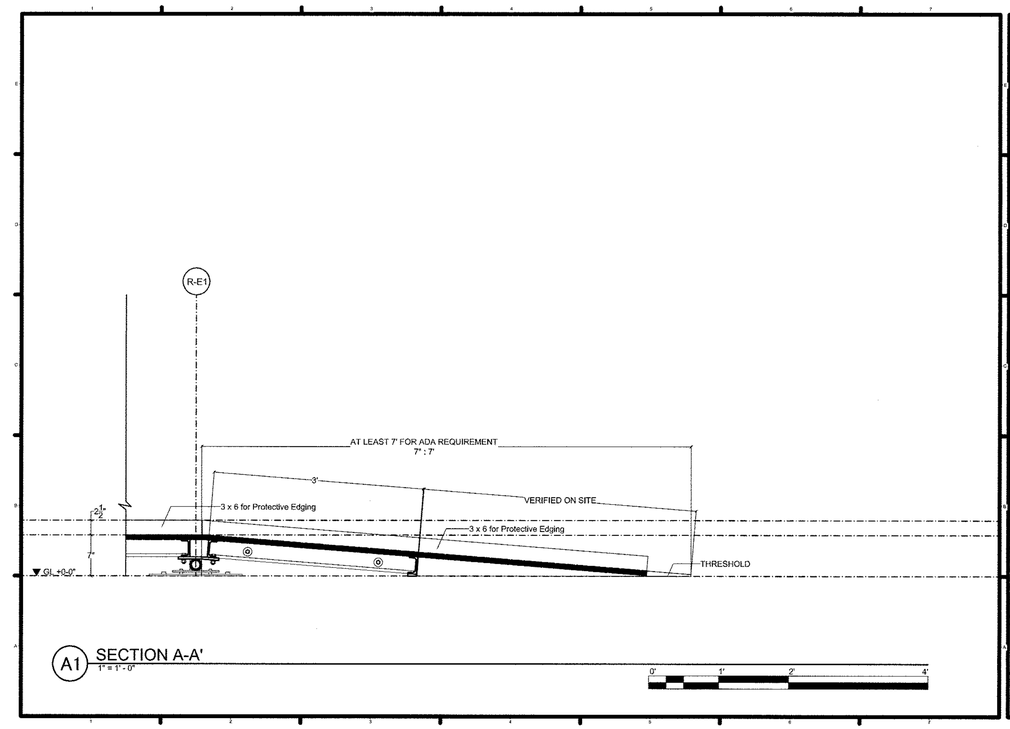

A1 SECTION A-A'
1" = 1' - 0"

HALE PILIHONUA

TEAM NAME:
ADDRESS:
CONTACT:
CONSULTANTS:
ARCHITECTURE:
ENGINEERS:
LANDSCAPING:
SAFETY FIRST CODE CONSULTANTS:
CLIENT
U.S. DEPARTMENT OF ENERGY
SOLAR DECATHLON 2011
WWW.SOLARDECATHLON.GOV
LOT NUMBER:
DRAWN BY: UNIVERSITY OF HAWAII
CHECKED BY:
COPYRIGHT: UNIVERSITY OF HAWAII SCHOOL OF ARCHITECTURE
SHEET TITLE
SECTION A-A'
R-301

PRODUCED BY AN AUTODESK EDUCATIONAL PRODUCT

PRODUCED BY AN AUTODESK EDUCATIONAL PRODUCT

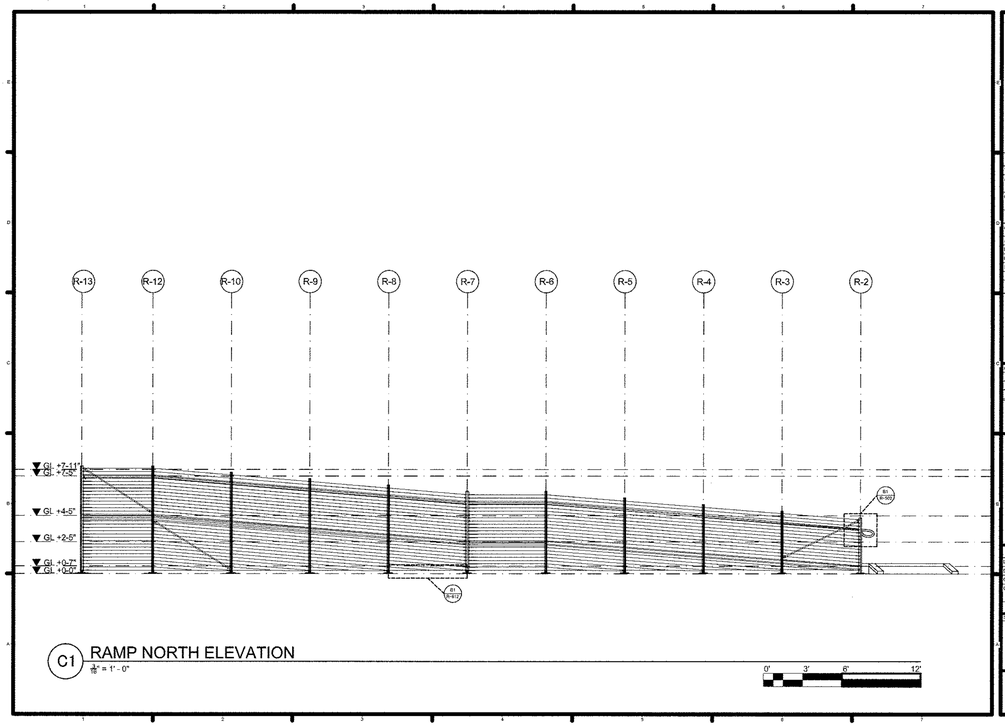

C1 RAMP NORTH ELEVATION
1/8" = 1' - 0"

HALE PILIHONUA

TEAM NAME:
ADDRESS:
CONTACT:
CONSULTANTS:
ARCHITECTURE:
ENGINEERS:
LANDSCAPING:
SAFETY FIRST CODE CONSULTANTS:
CLIENT
U.S. DEPARTMENT OF ENERGY
SOLAR DECATHLON 2011
WWW.SOLARDECATHLON.GOV
LOT NUMBER:
DRAWN BY: UNIVERSITY OF HAWAII
CHECKED BY:
COPYRIGHT: UNIVERSITY OF HAWAII SCHOOL OF ARCHITECTURE
SHEET TITLE
RAMP NORTH ELEVATION
R-201

PRODUCED BY AN AUTODESK EDUCATIONAL PRODUCT

PRODUCED BY AN AUTODESK EDUCATIONAL PRODUCT

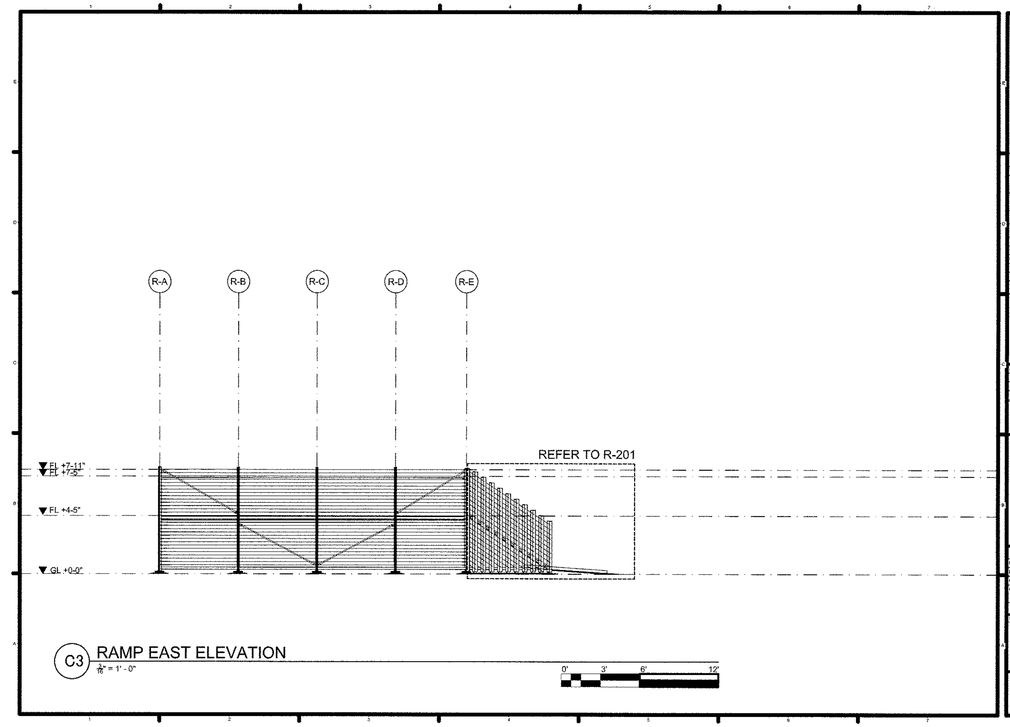

C3 RAMP EAST ELEVATION
1/8" = 1' - 0"

HALE PILIHONUA

TEAM NAME:
ADDRESS:
CONTACT:
CONSULTANTS:
ARCHITECTURE:
ENGINEERS:
LANDSCAPING:
SAFETY FIRST CODE CONSULTANTS:
CLIENT
U.S. DEPARTMENT OF ENERGY
SOLAR DECATHLON 2011
WWW.SOLARDECATHLON.GOV
LOT NUMBER:
DRAWN BY: UNIVERSITY OF HAWAII
CHECKED BY:
COPYRIGHT: UNIVERSITY OF HAWAII SCHOOL OF ARCHITECTURE
SHEET TITLE
RAMP EAST ELEVATION
R-203

PRODUCED BY AN AUTODESK EDUCATIONAL PRODUCT

REGISTERED PROFESSIONAL ENGINEER
JOHN A. WORLEY
No. S 5447
EXP. 09/30/11
STRUCTURAL
STATE OF CALIFORNIA

PRODUCED BY AN AUTODESK EDUCATIONAL PRODUCT

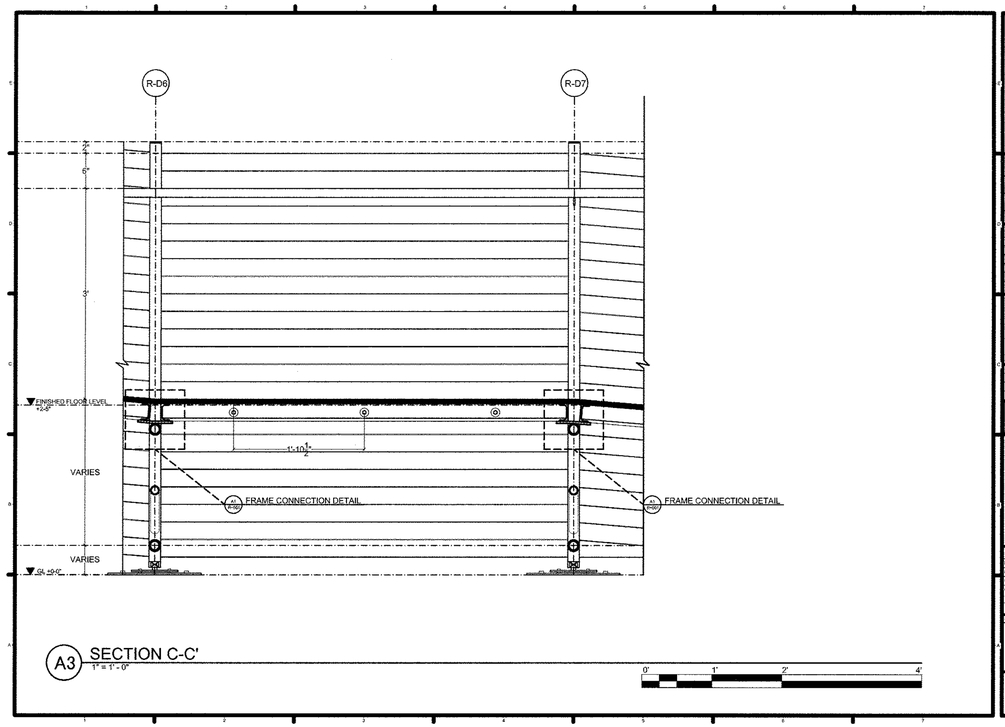

A3 SECTION C-C'
1" = 1' - 0"

HALE PILIHONUA

TEAM NAME:
ADDRESS:
CONTACT:
CONSULTANTS
ARCHITECTURE:
ENGINEERS:
LANDSCAPING:
SAFETY FIRST CODE CONSULTANTS:
CLIENT
U.S. DEPARTMENT OF ENERGY
SOLAR DECATHLON 2011
WWW.SOLARDECATHLON.GOV
LOT NUMBER:
DRAWN BY: UNIVERSITY OF HAWAII
CHECKED BY:
COPYRIGHT: UNIVERSITY OF HAWAII SCHOOL OF ARCHITECTURE
SHEET TITLE
SECTION C-C'
R-303

PRODUCED BY AN AUTODESK EDUCATIONAL PRODUCT

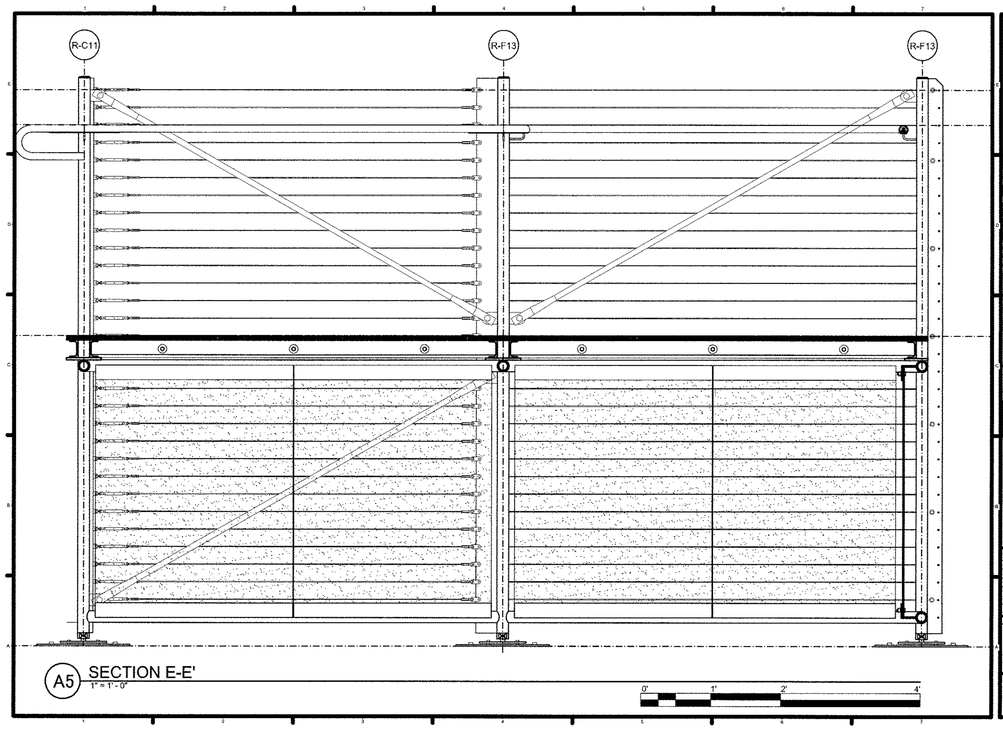

A5 SECTION E-E'
1" = 1' - 0"

HALE PILIHONUA

TEAM NAME:
ADDRESS:
CONTACT:
CONSULTANTS
ARCHITECTURE:
ENGINEERS:
LANDSCAPING:
SAFETY FIRST CODE CONSULTANTS:
CLIENT
U.S. DEPARTMENT OF ENERGY
SOLAR DECATHLON 2011
WWW.SOLARDECATHLON.GOV
LOT NUMBER:
DRAWN BY: UNIVERSITY OF HAWAII
CHECKED BY:
COPYRIGHT: UNIVERSITY OF HAWAII SCHOOL OF ARCHITECTURE
SHEET TITLE
SECTION E-E'
R-305

PRODUCED BY AN AUTODESK EDUCATIONAL PRODUCT

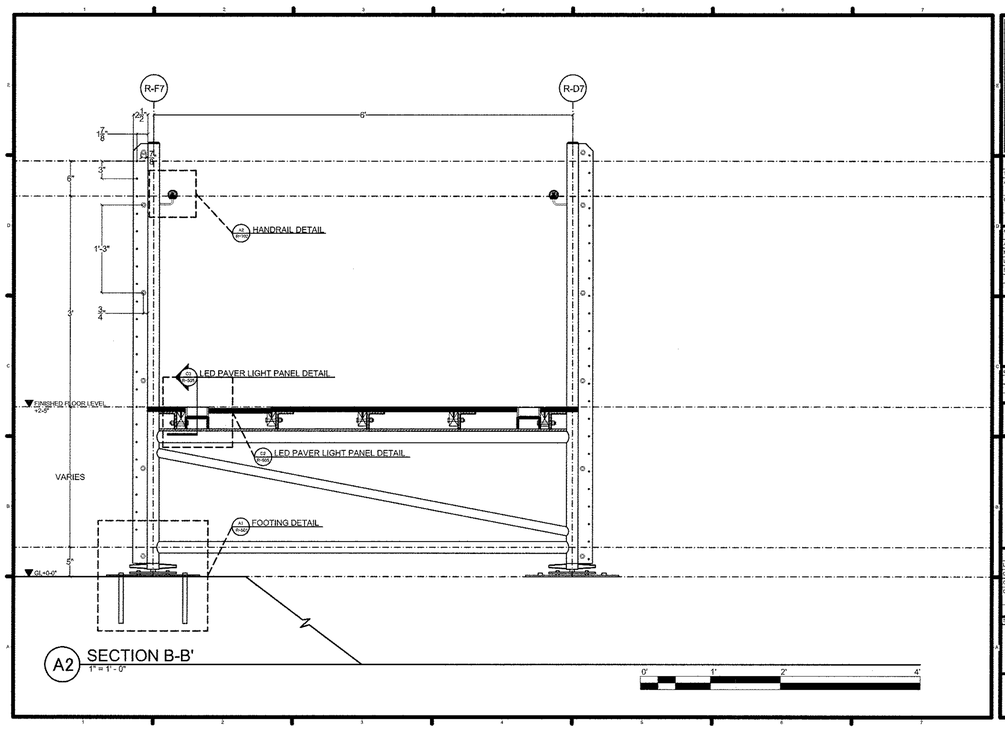

A2 SECTION B-B'
1" = 1' - 0"

HALE PILIHONUA

TEAM NAME:
ADDRESS:
CONTACT:
CONSULTANTS
ARCHITECTURE:
ENGINEERS:
LANDSCAPING:
SAFETY FIRST CODE CONSULTANTS:
CLIENT
U.S. DEPARTMENT OF ENERGY
SOLAR DECATHLON 2011
WWW.SOLARDECATHLON.GOV
LOT NUMBER:
DRAWN BY: UNIVERSITY OF HAWAII
CHECKED BY:
COPYRIGHT: UNIVERSITY OF HAWAII SCHOOL OF ARCHITECTURE
SHEET TITLE
SECTION B-B'
R-302

PRODUCED BY AN AUTODESK EDUCATIONAL PRODUCT

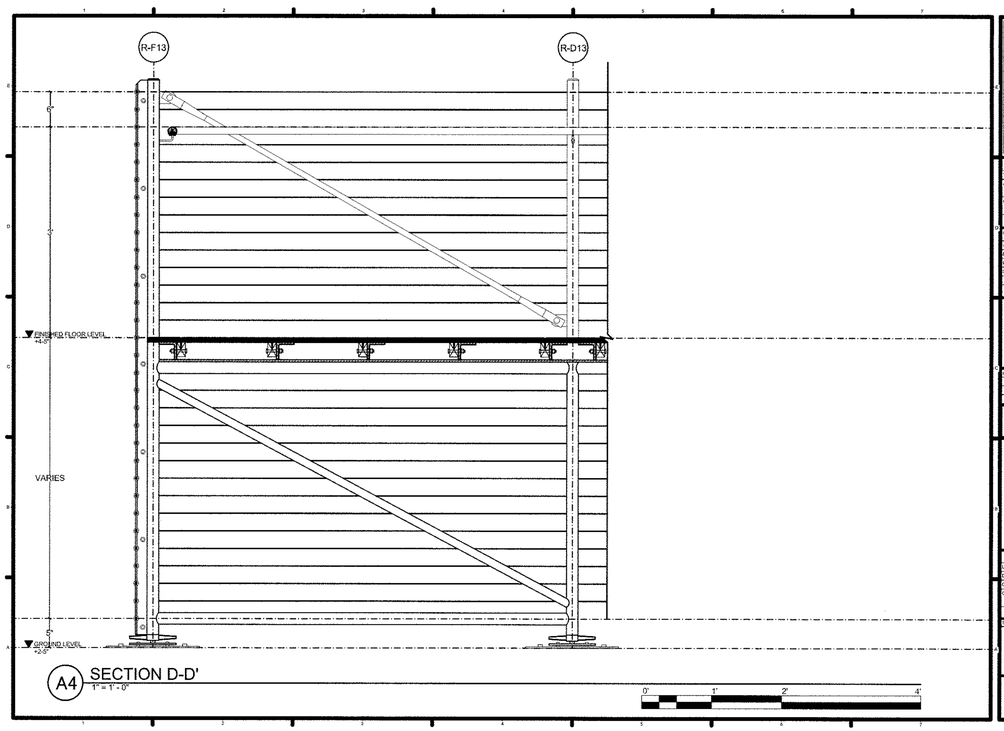

A4 SECTION D-D'
1" = 1' - 0"

HALE PILIHONUA

TEAM NAME:
ADDRESS:
CONTACT:
CONSULTANTS
ARCHITECTURE:
ENGINEERS:
LANDSCAPING:
SAFETY FIRST CODE CONSULTANTS:
CLIENT
U.S. DEPARTMENT OF ENERGY
SOLAR DECATHLON 2011
WWW.SOLARDECATHLON.GOV
LOT NUMBER:
DRAWN BY: UNIVERSITY OF HAWAII
CHECKED BY:
COPYRIGHT: UNIVERSITY OF HAWAII SCHOOL OF ARCHITECTURE
SHEET TITLE
SECTION D-D'
R-304

PRODUCED BY AN AUTODESK EDUCATIONAL PRODUCT

LICENSED PROFESSIONAL ENGINEER
JOHN A. WOMELY
No. S4449
EXP. 06/31/11
STRUCTURAL
STATE OF CALIFORNIA

PRODUCED BY AN AUTODESK EDUCATIONAL PRODUCT

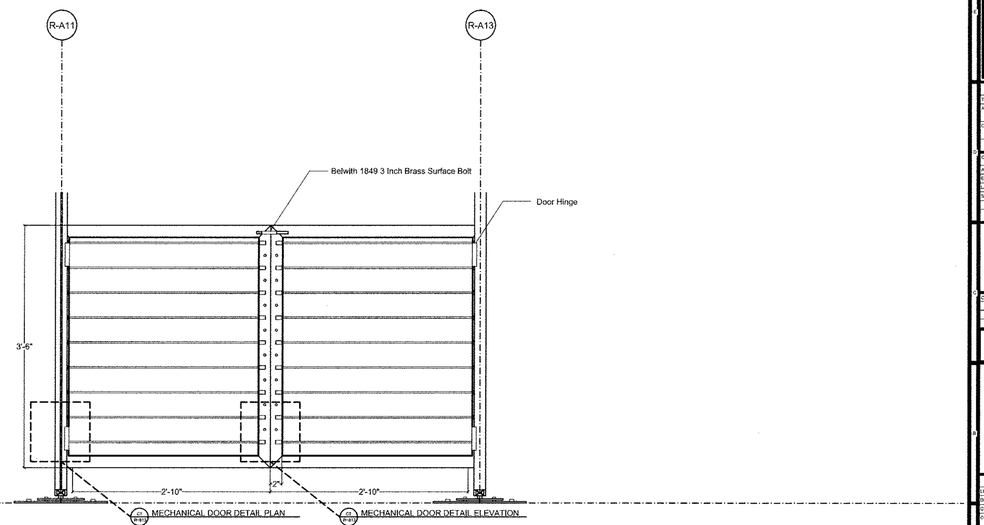

B1 MECHANICAL SERVICE DOOR
1" = 1'-0"

HALE PILIHONUA

TEAM NAME:
ADDRESS:
CONTACT:
CONSULTANTS:
ARCHITECTURE:
ENGINEERS:
LANDSCAPING:
SAFETY FIRST CODE CONSULTANTS:
CLIENT:
U.S. DEPARTMENT OF ENERGY
SOLAR DECATHLON 2011
WWW.SOLARDECATHLON.GOV
LOT NUMBER:
DRAWN BY: UNIVERSITY OF HAWAII
CHECKED BY:
COPYRIGHT: UNIVERSITY OF HAWAII SCHOOL OF ARCHITECTURE
SHEET TITLE
MECHANICAL SERVICE DOOR
R-307

PRODUCED BY AN AUTODESK EDUCATIONAL PRODUCT

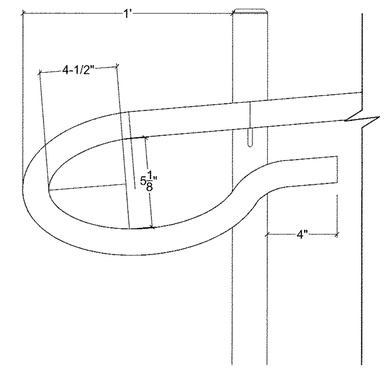

B1 HANDRAIL END
3" = 1'-0"

HALE PILIHONUA

TEAM NAME:
ADDRESS:
CONTACT:
CONSULTANTS:
ARCHITECTURE:
ENGINEERS:
LANDSCAPING:
SAFETY FIRST CODE CONSULTANTS:
CLIENT:
U.S. DEPARTMENT OF ENERGY
SOLAR DECATHLON 2011
WWW.SOLARDECATHLON.GOV
LOT NUMBER:
DRAWN BY: UNIVERSITY OF HAWAII
CHECKED BY:
COPYRIGHT: UNIVERSITY OF HAWAII SCHOOL OF ARCHITECTURE
SHEET TITLE
RAMP HANDRAIL END DETAIL
R-502

PRODUCED BY AN AUTODESK EDUCATIONAL PRODUCT

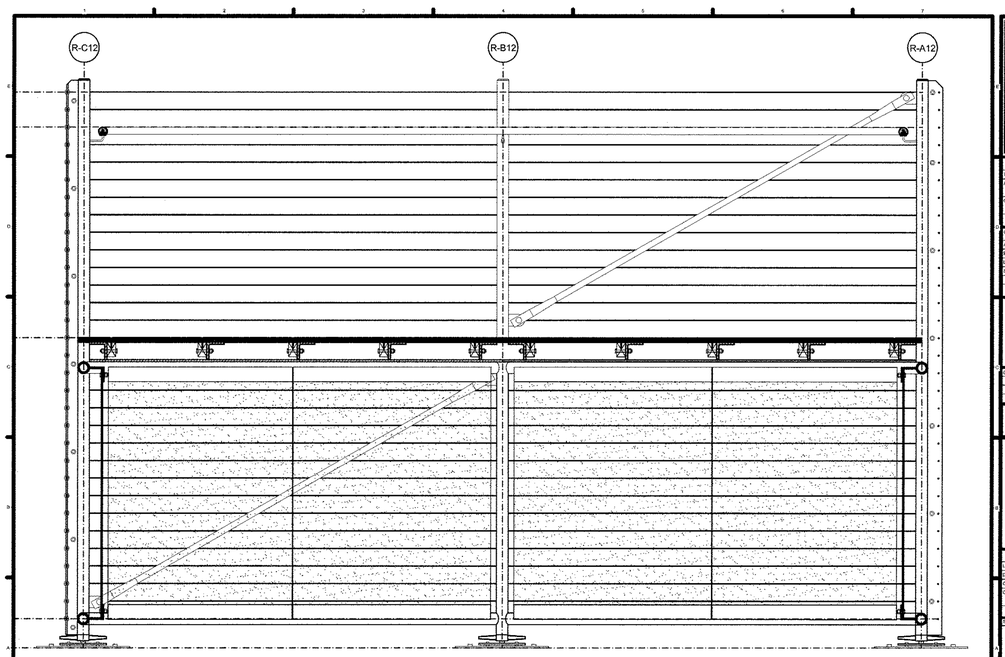

A6 SECTION E-E'
1" = 1'-0"

HALE PILIHONUA

TEAM NAME:
ADDRESS:
CONTACT:
CONSULTANTS:
ARCHITECTURE:
ENGINEERS:
LANDSCAPING:
SAFETY FIRST CODE CONSULTANTS:
CLIENT:
U.S. DEPARTMENT OF ENERGY
SOLAR DECATHLON 2011
WWW.SOLARDECATHLON.GOV
LOT NUMBER:
DRAWN BY: UNIVERSITY OF HAWAII
CHECKED BY:
COPYRIGHT: UNIVERSITY OF HAWAII SCHOOL OF ARCHITECTURE
SHEET TITLE
SECTION E-E'
R-306

PRODUCED BY AN AUTODESK EDUCATIONAL PRODUCT

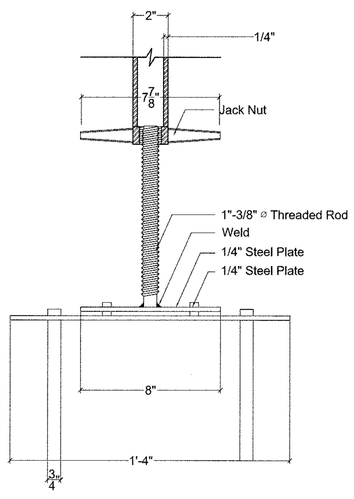

A1 LEVER JACK ASSEMBLY TYP
3" = 1'-0"

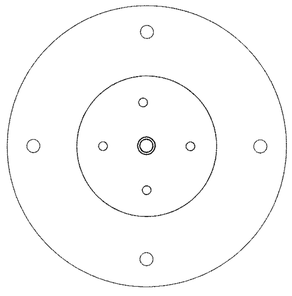

A2 FOOTING PLAN TYP
3" = 1'-0"

HALE PILIHONUA

TEAM NAME:
ADDRESS:
CONTACT:
CONSULTANTS:
ARCHITECTURE:
ENGINEERS:
LANDSCAPING:
SAFETY FIRST CODE CONSULTANTS:
CLIENT:
U.S. DEPARTMENT OF ENERGY
SOLAR DECATHLON 2011
WWW.SOLARDECATHLON.GOV
LOT NUMBER:
DRAWN BY: UNIVERSITY OF HAWAII
CHECKED BY:
COPYRIGHT: UNIVERSITY OF HAWAII SCHOOL OF ARCHITECTURE
SHEET TITLE
RAMP FOOTING DETAIL
R-501

PRODUCED BY AN AUTODESK EDUCATIONAL PRODUCT

PRODUCED BY AN AUTODESK EDUCATIONAL PRODUCT

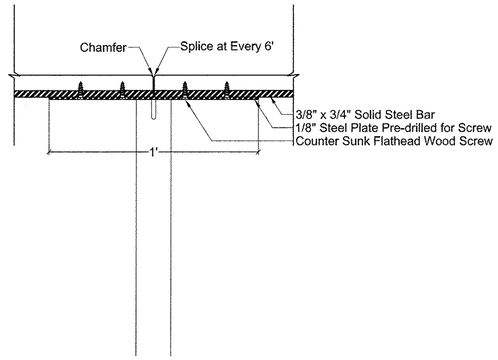

B3 HANDRAIL SPLICE
3" = 1'-0"

HALE PILIHONUA

TEAM NAME:
ADDRESS:
CONTACT:
CONSULTANTS:
ARCHITECTURE:
ENGINEERS:
LANDSCAPING:
SAFETY FIRST CODE CONSULTANTS:
CLIENT
U.S. DEPARTMENT OF ENERGY
SOLAR DECATHLON 2011
WWW.SOLARDECATHLON.GOV
LOT NUMBER:
DRAWN BY: UNIVERSITY OF HAWAII
CHECKED BY:
COPYRIGHT: UNIVERSITY OF HAWAII SCHOOL OF ARCHITECTURE
SHEET TITLE
RAMP HANDRAIL SPLICE DETAIL
R-504

PRODUCED BY AN AUTODESK EDUCATIONAL PRODUCT

PRODUCED BY AN AUTODESK EDUCATIONAL PRODUCT

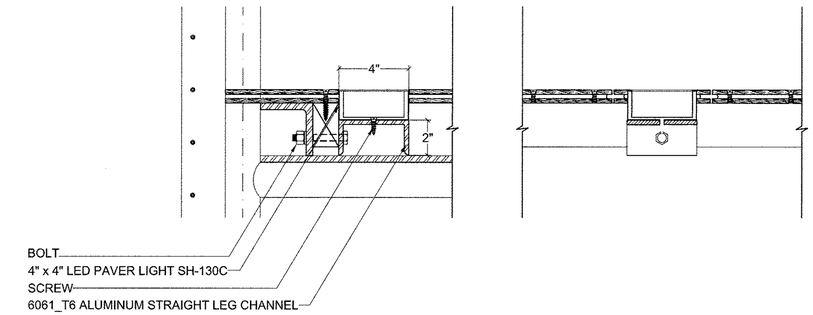

C2 LED PAVER LIGHT DETAIL
3" = 1'-0"

C3 LED PAVER LIGHT SECTION DETAIL
3" = 1'-0"

HALE PILIHONUA

TEAM NAME:
ADDRESS:
CONTACT:
CONSULTANTS:
ARCHITECTURE:
ENGINEERS:
LANDSCAPING:
SAFETY FIRST CODE CONSULTANTS:
CLIENT
U.S. DEPARTMENT OF ENERGY
SOLAR DECATHLON 2011
WWW.SOLARDECATHLON.GOV
LOT NUMBER:
DRAWN BY: UNIVERSITY OF HAWAII
CHECKED BY:
COPYRIGHT: UNIVERSITY OF HAWAII SCHOOL OF ARCHITECTURE
SHEET TITLE
LED PAVER LIGHT DETAIL
R-506

PRODUCED BY AN AUTODESK EDUCATIONAL PRODUCT

PRODUCED BY AN AUTODESK EDUCATIONAL PRODUCT

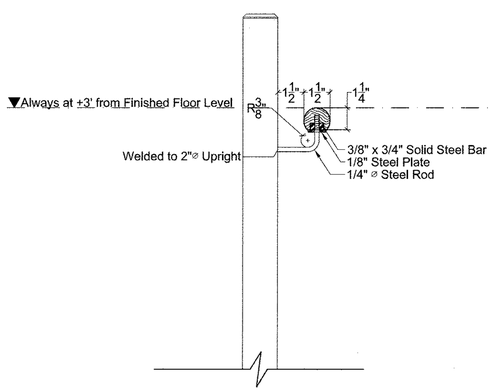

B2 HANDRAIL SECTON TYP
3" = 1'-0"

HALE PILIHONUA

TEAM NAME:
ADDRESS:
CONTACT:
CONSULTANTS:
ARCHITECTURE:
ENGINEERS:
LANDSCAPING:
SAFETY FIRST CODE CONSULTANTS:
CLIENT
U.S. DEPARTMENT OF ENERGY
SOLAR DECATHLON 2011
WWW.SOLARDECATHLON.GOV
LOT NUMBER:
DRAWN BY: UNIVERSITY OF HAWAII
CHECKED BY:
COPYRIGHT: UNIVERSITY OF HAWAII SCHOOL OF ARCHITECTURE
SHEET TITLE
RAMP HANDRAIL SECTION DETAIL
R-503

PRODUCED BY AN AUTODESK EDUCATIONAL PRODUCT

PRODUCED BY AN AUTODESK EDUCATIONAL PRODUCT

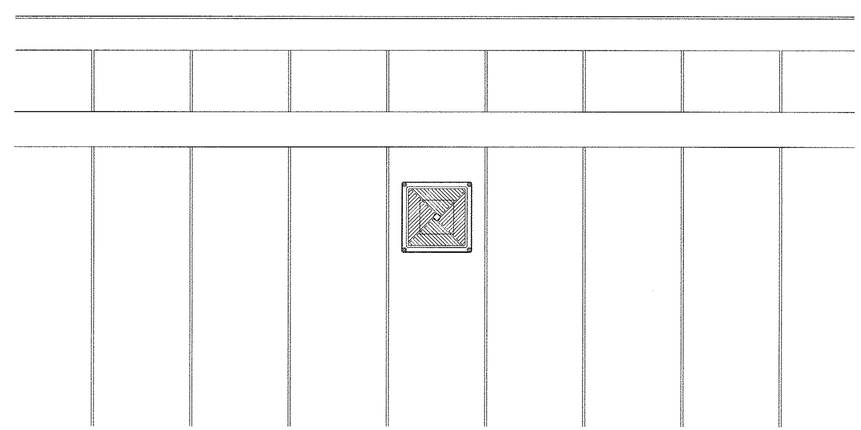

C1 LED PAVER LIGHT
3" = 1'-0"

HALE PILIHONUA

TEAM NAME:
ADDRESS:
CONTACT:
CONSULTANTS:
ARCHITECTURE:
ENGINEERS:
LANDSCAPING:
SAFETY FIRST CODE CONSULTANTS:
CLIENT
U.S. DEPARTMENT OF ENERGY
SOLAR DECATHLON 2011
WWW.SOLARDECATHLON.GOV
LOT NUMBER:
DRAWN BY: UNIVERSITY OF HAWAII
CHECKED BY:
COPYRIGHT: UNIVERSITY OF HAWAII SCHOOL OF ARCHITECTURE
SHEET TITLE
LED PAVER LIGHT
R-505

PRODUCED BY AN AUTODESK EDUCATIONAL PRODUCT

REGISTERED PROFESSIONAL ENGINEER
JOHN A. WOLF
No. 3449
Exp. 03/31/11
STRUCTURAL
STATE OF CALIFORNIA

PRODUCED BY AN AUTODESK EDUCATIONAL PRODUCT

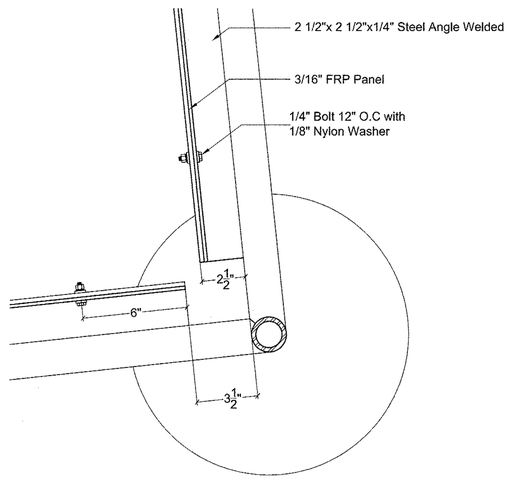

E1 FRP PANEL DETAIL PLAN
3" = 1' - 0"

HALE PILIHONUA

TEAM NAME:
ADDRESS:
CONTACT:
CONSULTANTS
ARCHITECTURE:
ENGINEERS:
LANDSCAPING:
SAFETY FIRST CODE CONSULTANTS:

CLIENT
U.S. DEPARTMENT OF ENERGY
SOLAR DECATHLON 2011
WWW.SOLARDECATHLON.GOV

LOT NUMBER:
DRAWN BY: UNIVERSITY OF HAWAII
CHECKED BY:
COPYRIGHT: UNIVERSITY OF HAWAII SCHOOL OF ARCHITECTURE

SHEET TITLE
FRP PANEL DETAIL PLAN

R-508

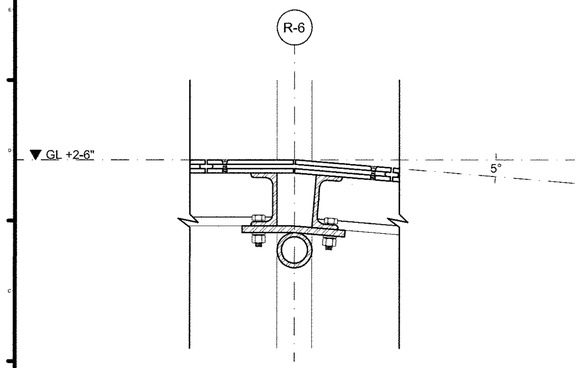

S2 DECKING CONNECTION AT R-6
3" = 1' - 0"

HALE PILIHONUA

TEAM NAME:
ADDRESS:
CONTACT:
CONSULTANTS
ARCHITECTURE:
ENGINEERS:
LANDSCAPING:
SAFETY FIRST CODE CONSULTANTS:

CLIENT
U.S. DEPARTMENT OF ENERGY
SOLAR DECATHLON 2011
WWW.SOLARDECATHLON.GOV

LOT NUMBER:
DRAWN BY: UNIVERSITY OF HAWAII
CHECKED BY:
COPYRIGHT: UNIVERSITY OF HAWAII SCHOOL OF ARCHITECTURE

SHEET TITLE
RAMP DECKING DETAIL AT R-6

R-602

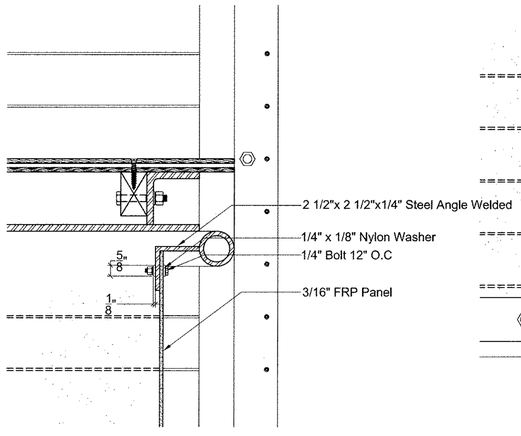

D1 FRP PANEL TOP CONNECTION DETAIL
3" = 1' - 0"

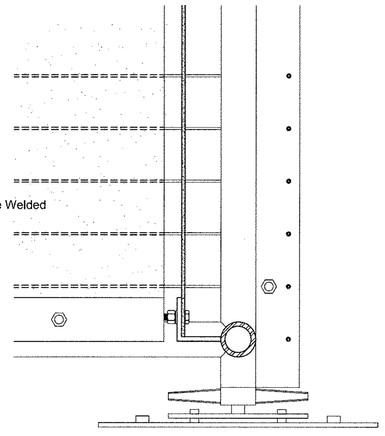

D2 FRP PANEL BOTTOM CONNECTION DETAIL
3" = 1' - 0"

HALE PILIHONUA

TEAM NAME:
ADDRESS:
CONTACT:
CONSULTANTS
ARCHITECTURE:
ENGINEERS:
LANDSCAPING:
SAFETY FIRST CODE CONSULTANTS:

CLIENT
U.S. DEPARTMENT OF ENERGY
SOLAR DECATHLON 2011
WWW.SOLARDECATHLON.GOV

LOT NUMBER:
DRAWN BY: UNIVERSITY OF HAWAII
CHECKED BY:
COPYRIGHT: UNIVERSITY OF HAWAII SCHOOL OF ARCHITECTURE

SHEET TITLE
FRP DETAIL FOR MECHANICAL DOOR

R-507

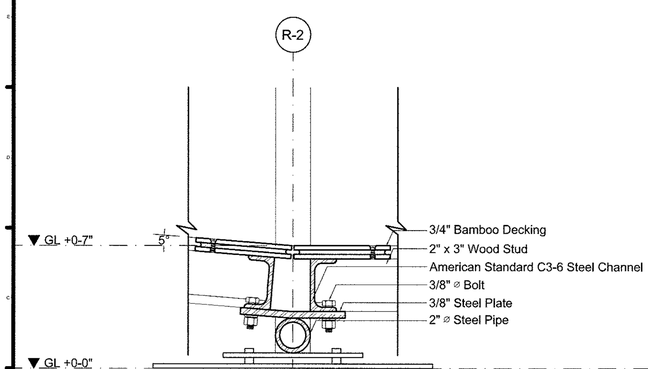

S1 DECKING CONNECTION AT R-2
3" = 1' - 0"

HALE PILIHONUA

TEAM NAME:
ADDRESS:
CONTACT:
CONSULTANTS
ARCHITECTURE:
ENGINEERS:
LANDSCAPING:
SAFETY FIRST CODE CONSULTANTS:

CLIENT
U.S. DEPARTMENT OF ENERGY
SOLAR DECATHLON 2011
WWW.SOLARDECATHLON.GOV

LOT NUMBER:
DRAWN BY: UNIVERSITY OF HAWAII
CHECKED BY:
COPYRIGHT: UNIVERSITY OF HAWAII SCHOOL OF ARCHITECTURE

SHEET TITLE
RAMP DECKING DETAIL AT R-2

R-601

REGISTERED PROFESSIONAL ENGINEER
JOHN A. WORLEY
S 3449
EXP. 06/31/11
STRUCTURAL
STATE OF CALIFORNIA

PRODUCED BY AN AUTODESK EDUCATIONAL PRODUCT

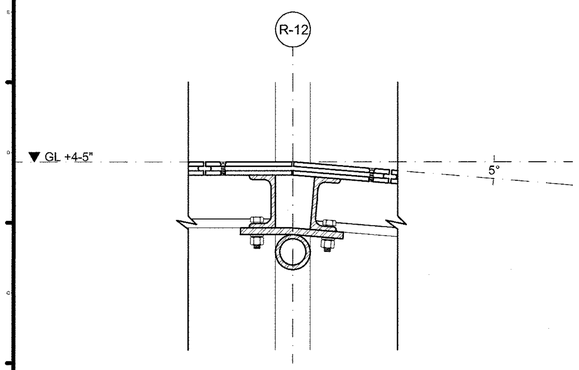

S4 DECKING CONDITION AT R-12
3" = 1'-0"

HALE PILIHONUA

TEAM NAME:
ADDRESS:
CONTACT:
CONSULTANTS:
ARCHITECTURE:
ENGINEERS:
LANDSCAPING:
SAFETY FIRST CODE CONSULTANTS:
CLIENT
U.S. DEPARTMENT OF ENERGY
SOLAR DECATHLON 2011
WWW.SOLARDECATHLON.GOV
LOT NUMBER:
DRAWN BY: UNIVERSITY OF HAWAII
CHECKED BY:
COPYRIGHT: UNIVERSITY OF HAWAII SCHOOL OF ARCHITECTURE
SHEET TITLE
RAMP DECKING DETAIL AT R-12
R-604

PRODUCED BY AN AUTODESK EDUCATIONAL PRODUCT

PRODUCED BY AN AUTODESK EDUCATIONAL PRODUCT

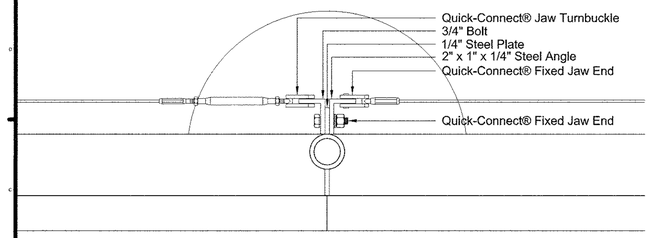

A2 WIRE CONNECTION AT R-E7
3" = 1'-0"

HALE PILIHONUA

TEAM NAME:
ADDRESS:
CONTACT:
CONSULTANTS:
ARCHITECTURE:
ENGINEERS:
LANDSCAPING:
SAFETY FIRST CODE CONSULTANTS:
CLIENT
U.S. DEPARTMENT OF ENERGY
SOLAR DECATHLON 2011
WWW.SOLARDECATHLON.GOV
LOT NUMBER:
DRAWN BY: UNIVERSITY OF HAWAII
CHECKED BY:
COPYRIGHT: UNIVERSITY OF HAWAII SCHOOL OF ARCHITECTURE
SHEET TITLE
RAMP WIRE DETAIL AT R-E7
R-802

PRODUCED BY AN AUTODESK EDUCATIONAL PRODUCT

PRODUCED BY AN AUTODESK EDUCATIONAL PRODUCT

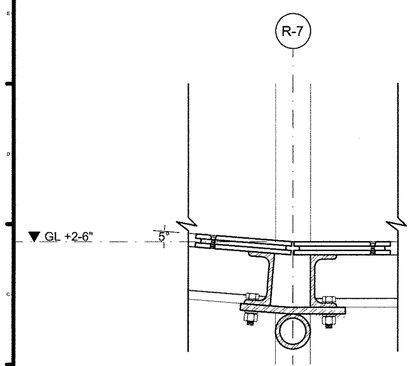

S3 DECKING CONNECTION AT R-7
3" = 1'-0"

HALE PILIHONUA

TEAM NAME:
ADDRESS:
CONTACT:
CONSULTANTS:
ARCHITECTURE:
ENGINEERS:
LANDSCAPING:
SAFETY FIRST CODE CONSULTANTS:
CLIENT
U.S. DEPARTMENT OF ENERGY
SOLAR DECATHLON 2011
WWW.SOLARDECATHLON.GOV
LOT NUMBER:
DRAWN BY: UNIVERSITY OF HAWAII
CHECKED BY:
COPYRIGHT: UNIVERSITY OF HAWAII SCHOOL OF ARCHITECTURE
SHEET TITLE
RAMP DECKING DETAIL AT R-7
R-603

PRODUCED BY AN AUTODESK EDUCATIONAL PRODUCT

PRODUCED BY AN AUTODESK EDUCATIONAL PRODUCT

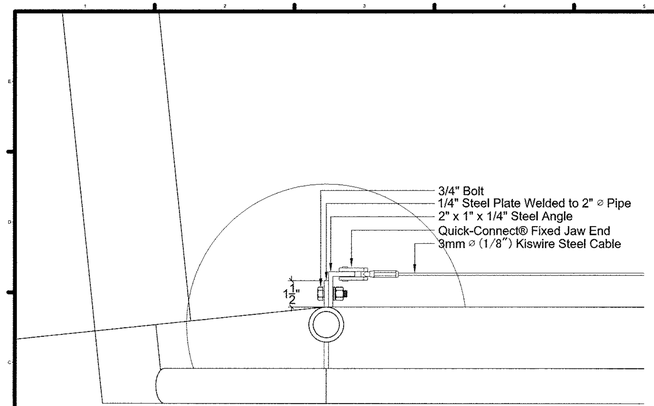

A1 WIRE CONNECTION AT R-E2
3" = 1'-0"

HALE PILIHONUA

TEAM NAME:
ADDRESS:
CONTACT:
CONSULTANTS:
ARCHITECTURE:
ENGINEERS:
LANDSCAPING:
SAFETY FIRST CODE CONSULTANTS:
CLIENT
U.S. DEPARTMENT OF ENERGY
SOLAR DECATHLON 2011
WWW.SOLARDECATHLON.GOV
LOT NUMBER:
DRAWN BY: UNIVERSITY OF HAWAII
CHECKED BY:
COPYRIGHT: UNIVERSITY OF HAWAII SCHOOL OF ARCHITECTURE
SHEET TITLE
RAMP WIRE DETAIL AT R-E2
R-801

PRODUCED BY AN AUTODESK EDUCATIONAL PRODUCT

PRODUCED BY AN AUTODESK EDUCATIONAL PRODUCT

REGISTERED PROFESSIONAL ENGINEER
JOHN A. WORTHINGTON
3/6/2019
EXP. 6/30/11
STRUCTURAL
STATE OF CALIFORNIA

PRODUCED BY AN AUTODESK EDUCATIONAL PRODUCT

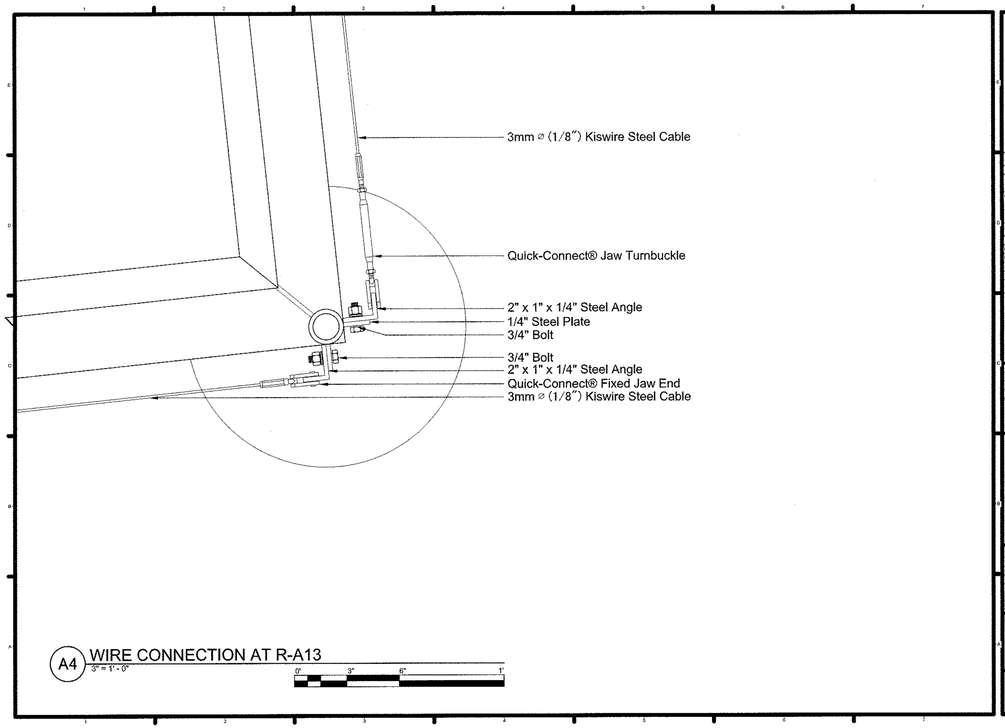

A4 WIRE CONNECTION AT R-A13
3" = 1' - 0"

HALE PILIHONUA

TEAM NAME:
ADDRESS:
CONTACT:
CONSULTANTS:
ARCHITECTURE:
ENGINEERS:
LANDSCAPING:
SAFETY FIRST CODE CONSULTANTS:
CLIENT: U.S. DEPARTMENT OF ENERGY
SOLAR DECATHLON 2011
WWW.SOLARDECATHLON.GOV
LOT NUMBER:
DRAWN BY: UNIVERSITY OF HAWAII
CHECKED BY:
COPYRIGHT: UNIVERSITY OF HAWAII SCHOOL OF ARCHITECTURE
SHEET TITLE
RAMP WIRE DETAIL AT R-A13
R-804

PRODUCED BY AN AUTODESK EDUCATIONAL PRODUCT

PRODUCED BY AN AUTODESK EDUCATIONAL PRODUCT

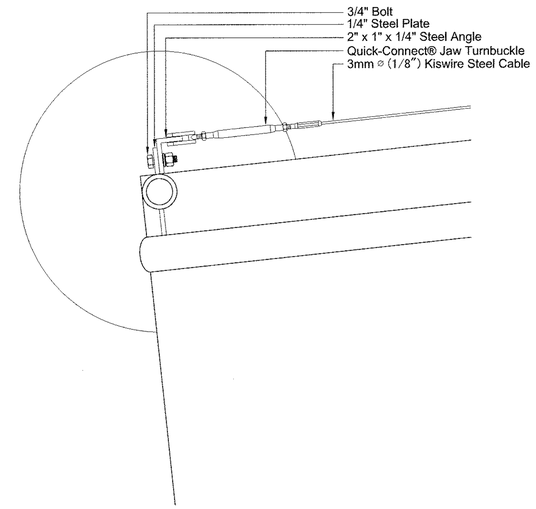

A6 WIRE CONNECTION AT R-C11
3" = 1' - 0"

HALE PILIHONUA

TEAM NAME:
ADDRESS:
CONTACT:
CONSULTANTS:
ARCHITECTURE:
ENGINEERS:
LANDSCAPING:
SAFETY FIRST CODE CONSULTANTS:
CLIENT: U.S. DEPARTMENT OF ENERGY
SOLAR DECATHLON 2011
WWW.SOLARDECATHLON.GOV
LOT NUMBER:
DRAWN BY: UNIVERSITY OF HAWAII
CHECKED BY:
COPYRIGHT: UNIVERSITY OF HAWAII SCHOOL OF ARCHITECTURE
SHEET TITLE
RAMP WIRE DETAIL AT R-C11
R-806

PRODUCED BY AN AUTODESK EDUCATIONAL PRODUCT

PRODUCED BY AN AUTODESK EDUCATIONAL PRODUCT

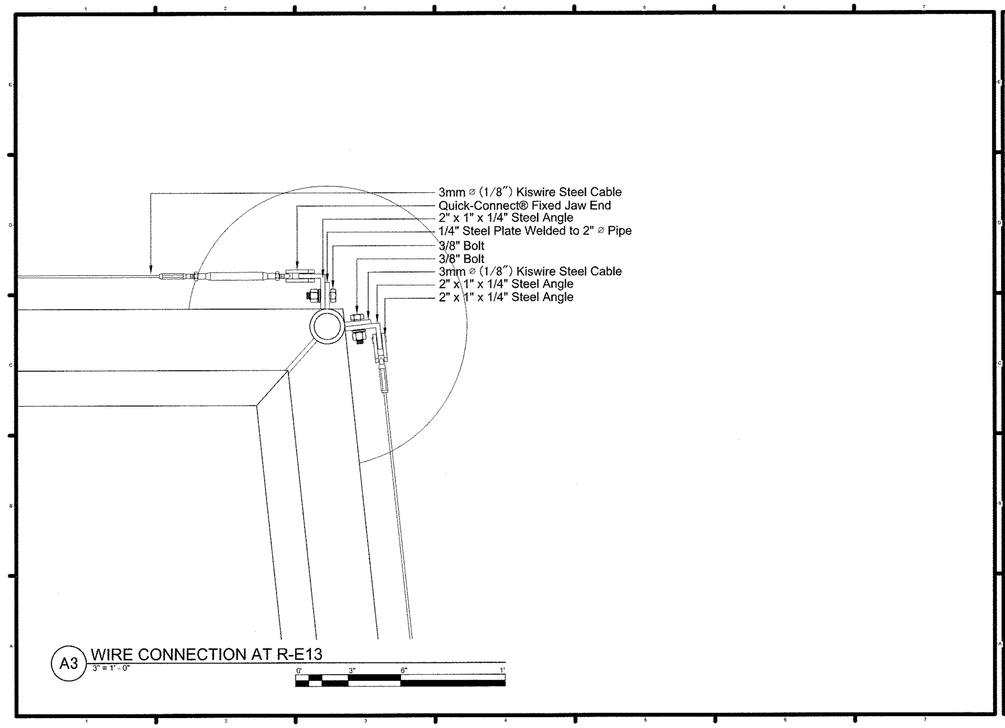

A3 WIRE CONNECTION AT R-E13
3" = 1' - 0"

HALE PILIHONUA

TEAM NAME:
ADDRESS:
CONTACT:
CONSULTANTS:
ARCHITECTURE:
ENGINEERS:
LANDSCAPING:
SAFETY FIRST CODE CONSULTANTS:
CLIENT: U.S. DEPARTMENT OF ENERGY
SOLAR DECATHLON 2011
WWW.SOLARDECATHLON.GOV
LOT NUMBER:
DRAWN BY: UNIVERSITY OF HAWAII
CHECKED BY:
COPYRIGHT: UNIVERSITY OF HAWAII SCHOOL OF ARCHITECTURE
SHEET TITLE
RAMP WIRE DETAIL AT R-E13
R-803

PRODUCED BY AN AUTODESK EDUCATIONAL PRODUCT

PRODUCED BY AN AUTODESK EDUCATIONAL PRODUCT

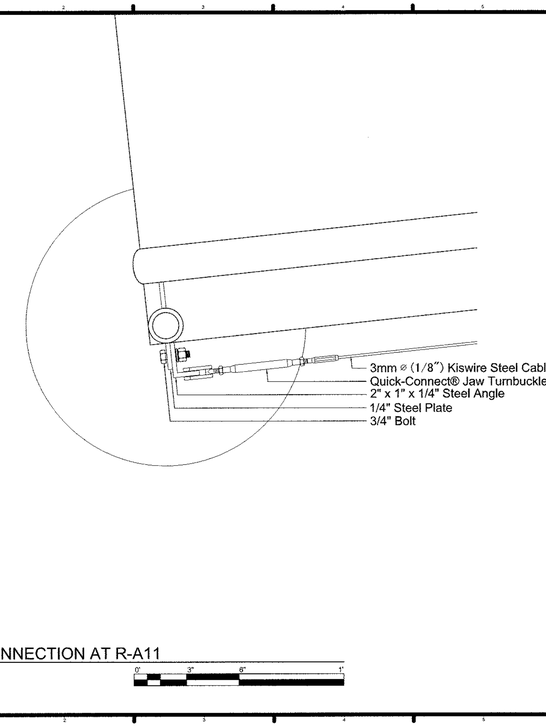

A5 WIRE CONNECTION AT R-A11
3" = 1' - 0"

HALE PILIHONUA

TEAM NAME:
ADDRESS:
CONTACT:
CONSULTANTS:
ARCHITECTURE:
ENGINEERS:
LANDSCAPING:
SAFETY FIRST CODE CONSULTANTS:
CLIENT: U.S. DEPARTMENT OF ENERGY
SOLAR DECATHLON 2011
WWW.SOLARDECATHLON.GOV
LOT NUMBER:
DRAWN BY: UNIVERSITY OF HAWAII
CHECKED BY:
COPYRIGHT: UNIVERSITY OF HAWAII SCHOOL OF ARCHITECTURE
SHEET TITLE
RAMP WIRE DETAIL AT R-A11
R-805

PRODUCED BY AN AUTODESK EDUCATIONAL PRODUCT

PRODUCED BY AN AUTODESK EDUCATIONAL PRODUCT

REGISTERED PROFESSIONAL ENGINEER
JOHN A. WOMACK
No. 34140
EXP. 03/31/11
STRUCTURAL
STATE OF CALIFORNIA

GENERAL SHEET NOTES

1. GENERAL SHEET NOTES
2. GENERAL SHEET NOTES 2
3. GENERAL SHEET NOTES 3
4. GENERAL SHEET NOTES 4
5. GENERAL SHEET NOTES 5FA FDAFDAFDASF D FDASDFSAFDASFDAS FA FAF
6. GENERAL SHEET NOTES 6
7. GENERAL SHEET NOTES 7
8. GENERAL SHEET NOTES 8

REFERENCE KEYNOTES

SHEET KEYNOTES

teamhawai'i

halepilihonua

TEAM NAME:	UNIVERSITY OF HAWAII (TEAM HAWAII)
ADDRESS:	UNIVERSITY OF HAWAI'I AT MĀNOA 2410 CAMPUS ROAD HONOLULU, HI 96822
CONTACT:	ROCKWOOD@ARCH.HAWAII.EDU WWW.SOLAR.HAWAII.EDU

CONSULTANTS

ARCHITECTURE:

ENGINEERS:

LANDSCAPING:

CODE CONSULTANTS:

CLIENT

U.S. DEPARTMENT OF ENERGY

SOLAR DECATHLON 2011

WWW.SOLARDECATHLON.GOV

U.S. DEPARTMENT OF ENERGY SOLAR DECATHLON

MARK	DATE	DESCRIPTION

LOT NUMBER:	306
DRAWN BY:	UNIVERSITY OF HAWAI'I
CHECKED BY:	CHECKER
COPYRIGHT:	UNIVERSITY OF HAWAI'I SCHOOL OF ARCHITECTURE

SHEET TITLE

ARCHITECTURAL SYMBOLS AND NOTES

A-001

5/8/2011 1:55:07 PM

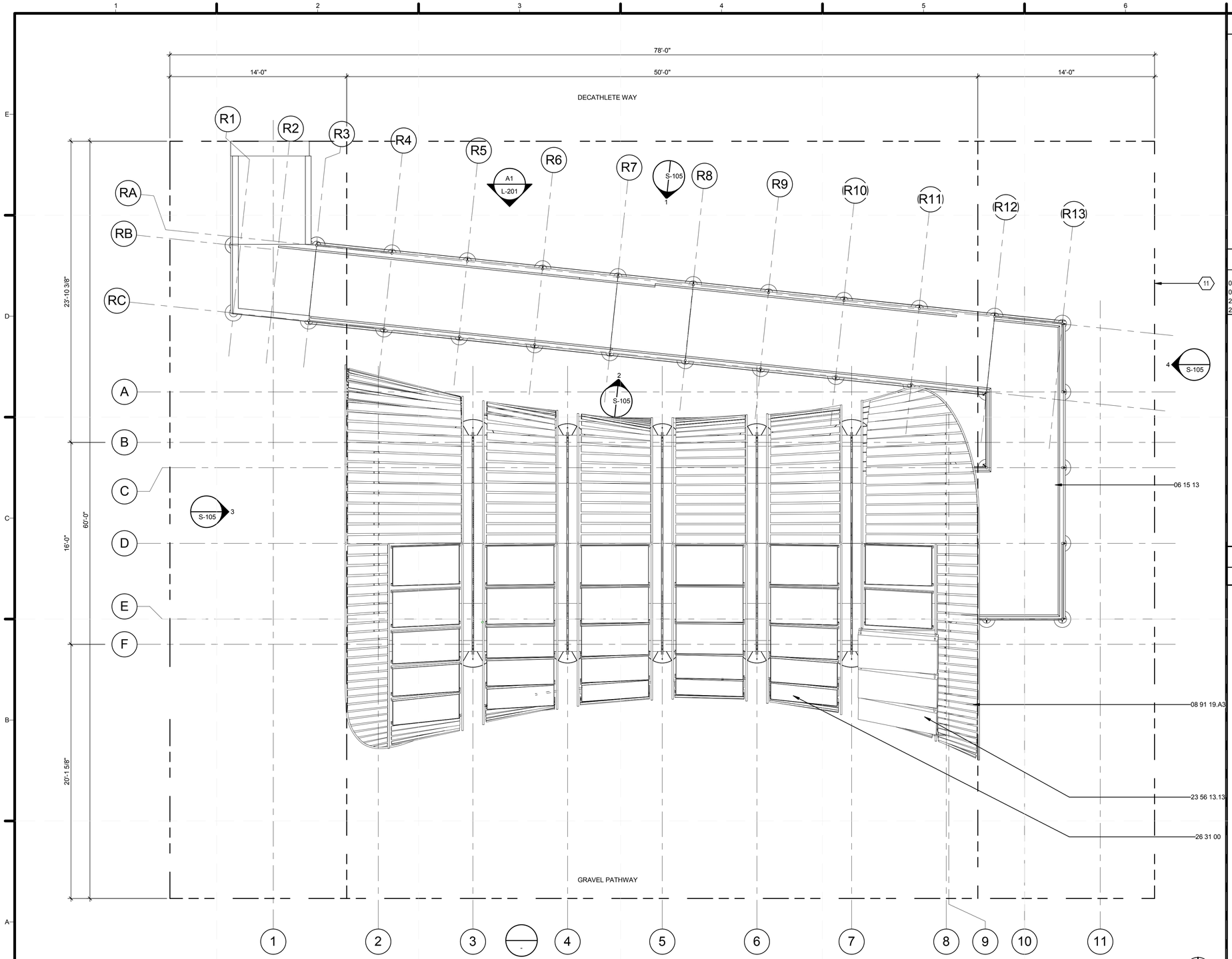

A1 SITE PLAN
1/4" = 1'-0"

0 2' 4' 8'

5/8/2011 1:55:28 PM

GENERAL SHEET NOTES

REFERENCE KEYNOTES

06 15 13	WOOD FLOOR DECKING
08 91 19.A3	
23 56 13.13	HEATING SOLAR FLAT-PLATE COLLECTORS
26 31 00	PHOTOVOLTAIC COLLECTORS

SHEET KEYNOTES

11	BATHROOM VENTILATION EXHAUST

teamhawai'i

halepilihonua

TEAM NAME:	UNIVERSITY OF HAWAII (TEAM HAWAII)
ADDRESS:	UNIVERSITY OF HAWAI'I AT MĀNOA 2410 CAMPUS ROAD HONOLULU, HI 96822
CONTACT:	ROCKWOOD@ARCH.HAWAII.EDU WWW.SOLAR.HAWAII.EDU

CONSULTANTS

ARCHITECTURE:

ENGINEERS:

LANDSCAPING:

CODE CONSULTANTS:

CLIENT

U.S. DEPARTMENT OF ENERGY

SOLAR DECATHLON 2011

WWW.SOLARDECATHLON.GOV

U.S. DEPARTMENT OF ENERGY SOLAR DECATHLON

MARK	DATE	DESCRIPTION

LOT NUMBER:	306
DRAWN BY:	UNIVERSITY OF HAWAI'I
CHECKED BY:	CHECKER
COPYRIGHT:	UNIVERSITY OF HAWAI'I SCHOOL OF ARCHITECTURE

SHEET TITLE

SITE PLAN

A-101

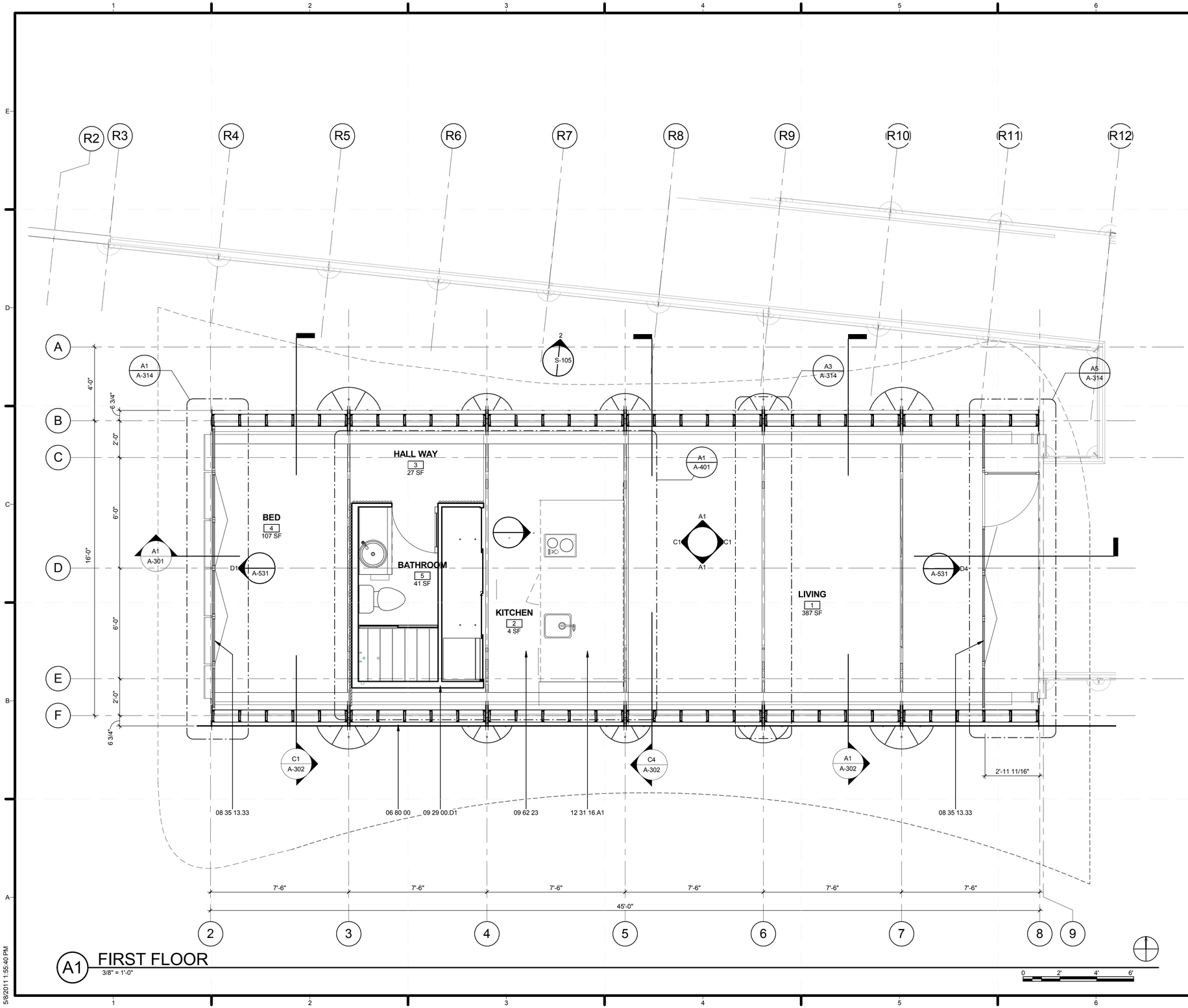

A1 FIRST FLOOR
3/8" = 1'-0"

5/8/2011 1:55:40 PM

GENERAL SHEET NOTES

REFERENCE KEYNOTES

06 80 00	COMPOSITE FABRICATIONS
08 35 13.33	PANEL FOLDING DOORS
09 29 00.D1	5/8" GYPSUM WALLBOARD
09 62 23	BAMBOO FLOORING
12 31 16.A1	KITCHEN COUNTER TOP W/ INTEGRATED SEAM LESS SINK

SHEET KEYNOTES

teamhawai'i

halepilihonua

TEAM NAME: UNIVERSITY OF HAWAII (TEAM HAWAII)

ADDRESS: UNIVERSITY OF HAWAI'I AT MĀNOA
2410 CAMPUS ROAD
HONOLULU, HI 96822

CONTACT: ROCKWOOD@ARCH.HAWAII.EDU
WWW.SOLAR.HAWAII.EDU

CONSULTANTS

ARCHITECTURE:

ENGINEERS:

LANDSCAPING:

CODE CONSULTANTS:

CLIENT

U.S. DEPARTMENT OF ENERGY
SOLAR DECATHLON 2011
WWW.SOLARDECATHLON.GOV

U.S. DEPARTMENT OF ENERGY SOLAR DECATHLON

MARK	DATE	DESCRIPTION

LOT NUMBER:	306
DRAWN BY:	UNIVERSITY OF HAWAI'I
CHECKED BY:	CHECKER
COPYRIGHT:	UNIVERSITY OF HAWAI'I SCHOOL OF ARCHITECTURE

SHEET TITLE

FIRST FLOOR PLAN

A-110

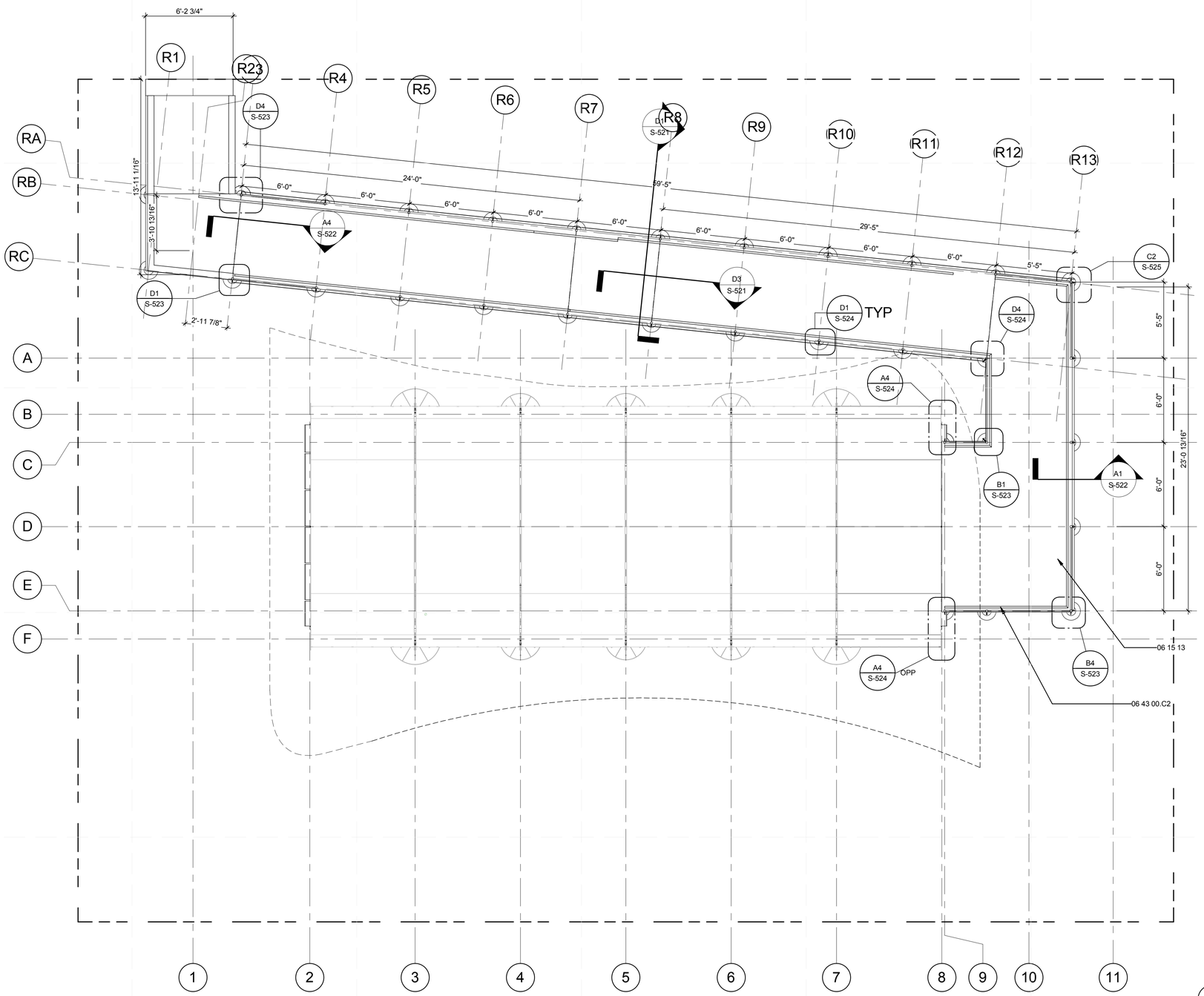

A1 RAMP DECK PLAN

1/4" = 1'-0"

0 2' 4' 8'

5/8/2011 1:55:50 PM

GENERAL SHEET NOTES

REFERENCE KEYNOTES

06 15 13	WOOD FLOOR DECKING
06 43 00.C2	1 1/2" ROUND RAIL

SHEET KEYNOTES

teamhawai'i

halepilihonua

TEAM NAME:	UNIVERSITY OF HAWAII (TEAM HAWAII)
ADDRESS:	UNIVERSITY OF HAWAI'I AT MĀNOA 2410 CAMPUS ROAD HONOLULU, HI 96822
CONTACT:	ROCKWOOD@ARCH.HAWAII.EDU WWW.SOLAR.HAWAII.EDU

CONSULTANTS

ARCHITECTURE:

ENGINEERS:

LANDSCAPING:

CODE CONSULTANTS:

CLIENT

U.S. DEPARTMENT OF ENERGY

SOLAR DECATHLON 2011

WWW.SOLARDECATHLON.GOV

U.S. DEPARTMENT OF ENERGY SOLAR DECATHLON

MARK	DATE	DESCRIPTION

LOT NUMBER:	306
DRAWN BY:	UNIVERSITY OF HAWAI'I
CHECKED BY:	Checker
COPYRIGHT:	UNIVERSITY OF HAWAI'I SCHOOL OF ARCHITECTURE

SHEET TITLE

RAMP DECK PLAN

A-111

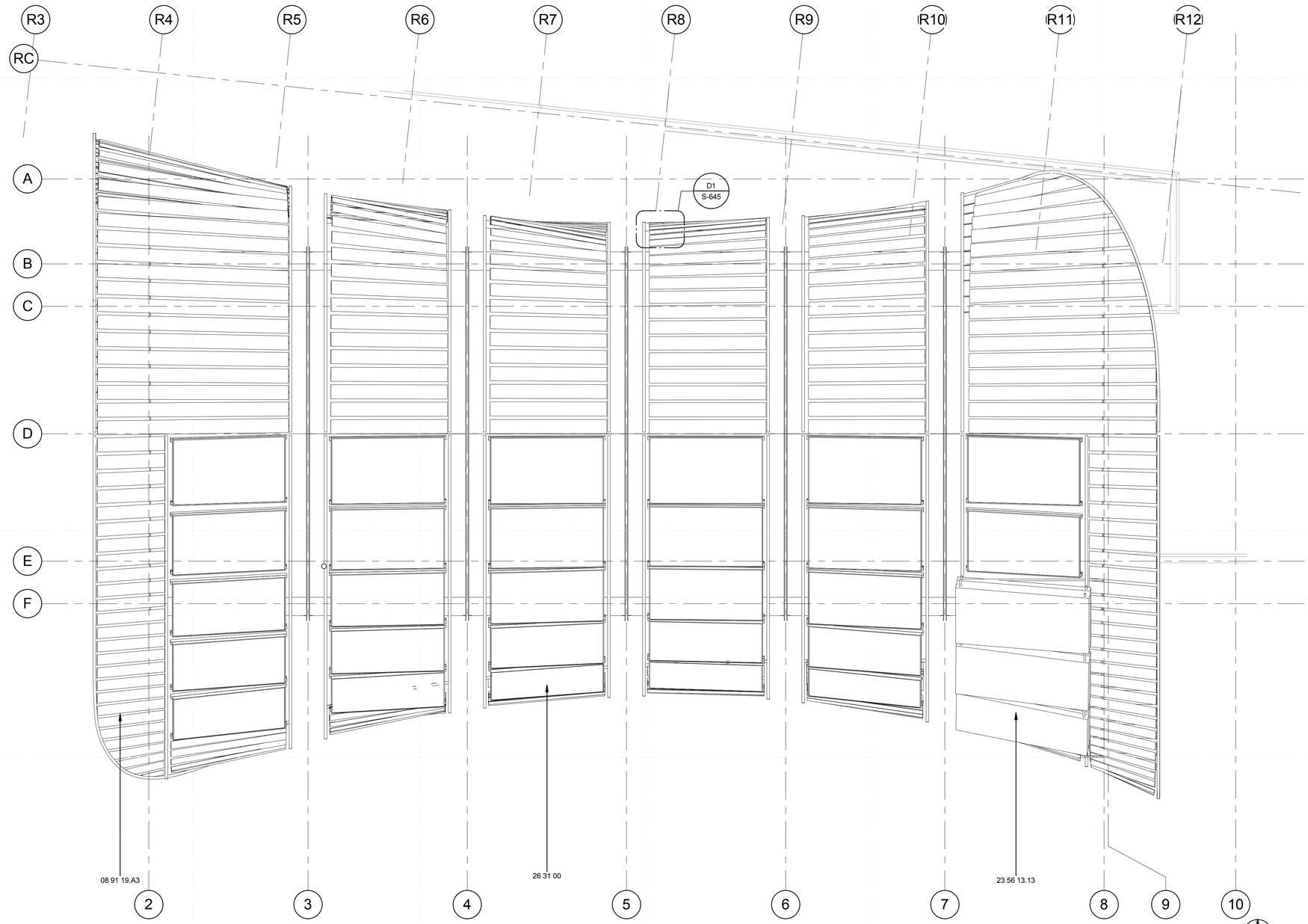

A1 ROOF PLAN SUPERSTRUCTURE

3/8" = 1'-0"

0 2' 4' 6'

5/9/2011 1:56:02 PM

GENERAL SHEET NOTES

REFERENCE KEYNOTES

08 91 19.A3	
23 56 13.13	HEATING SOLAR FLAT-PLATE COLLECTORS
26 31 00	PHOTOVOLTAIC COLLECTORS

SHEET KEYNOTES

teamhawai'i

halepilihonua

TEAM NAME:	UNIVERSITY OF HAWAII (TEAM HAWAII)
ADDRESS:	UNIVERSITY OF HAWAI'I AT MĀNOA 2410 CAMPUS ROAD HONOLULU, HI 96822
CONTACT:	ROCKWOOD@ARCH.HAWAII.EDU WWW.SOLAR.HAWAII.EDU

CONSULTANTS

ARCHITECTURE:

ENGINEERS:

LANDSCAPING:

CODE CONSULTANTS:

CLIENT

U.S. DEPARTMENT OF ENERGY

SOLAR DECATHLON 2011

WWW.SOLARDECATHLON.GOV

U.S. DEPARTMENT OF ENERGY SOLAR DECATHLON

MARK	DATE	DESCRIPTION

LOT NUMBER:	306
DRAWN BY:	UNIVERSITY OF HAWAI'I
CHECKED BY:	CHECKER
COPYRIGHT:	UNIVERSITY OF HAWAI'I SCHOOL OF ARCHITECTURE

SHEET TITLE

ROOF PLAN

A-112

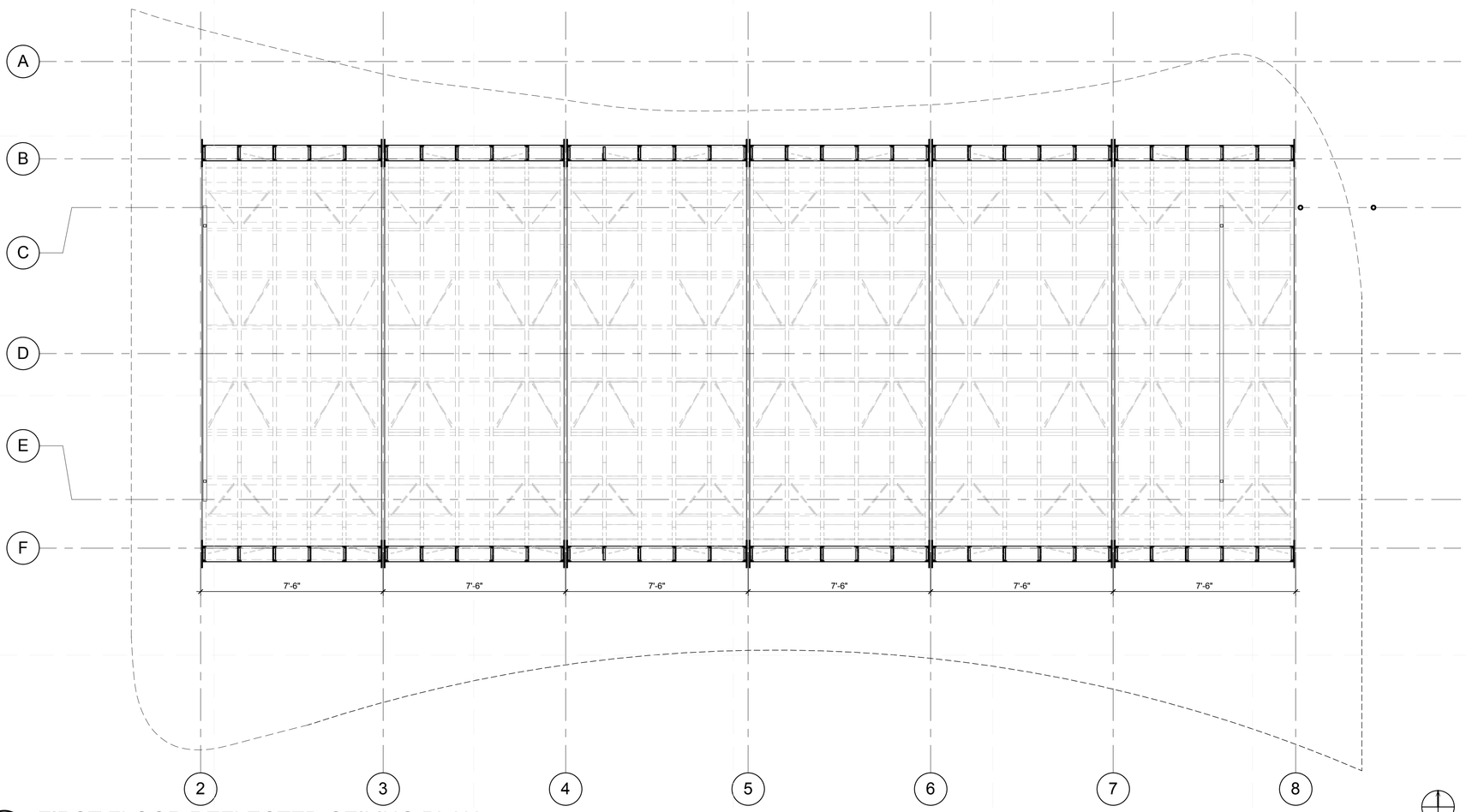

A1 FIRST FLOOR REFLECTED CEILING PLAN
3/8" = 1'-0"

GENERAL SHEET NOTES

REFERENCE KEYNOTES

SHEET KEYNOTES

teamhawai'i
halepilihonua

TEAM NAME: UNIVERSITY OF HAWAII (TEAM HAWAII)
ADDRESS: UNIVERSITY OF HAWAI'I AT MĀNOA
2410 CAMPUS ROAD
HONOLULU, HI 96822
CONTACT: ROCKWOOD@ARCH.HAWAII.EDU
WWW.SOLAR.HAWAII.EDU

CONSULTANTS
ARCHITECTURE:
ENGINEERS:
LANDSCAPING:
CODE CONSULTANTS:

CLIENT
U.S. DEPARTMENT OF ENERGY
SOLAR DECATHLON 2011
WWW.SOLARDECATHLON.GOV

U.S. DEPARTMENT OF ENERGY
SOLAR DECATHLON

MARK	DATE	DESCRIPTION

LOT NUMBER: 306
DRAWN BY: UNIVERSITY OF HAWAI'I
CHECKED BY: CHECKER

COPYRIGHT: UNIVERSITY OF HAWAI'I
SCHOOL OF ARCHITECTURE

SHEET TITLE
FIRST FLOOR REFLECTED CEILING PLAN

A-121

5/9/2011 1:56:10 PM

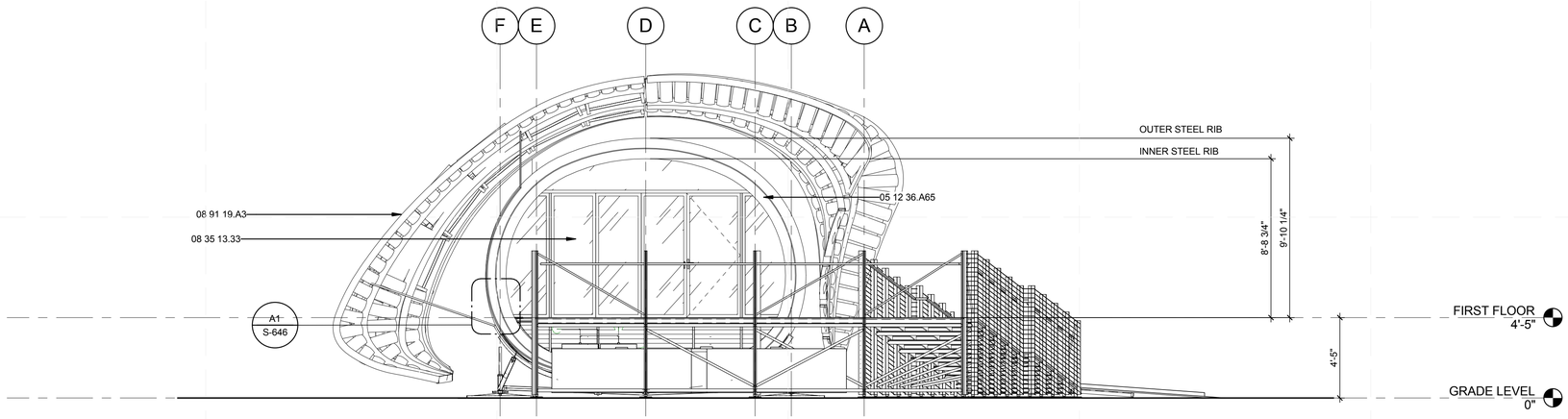

C1 EAST ELEVATION
1/4" = 1'-0"

0 2' 4' 8'

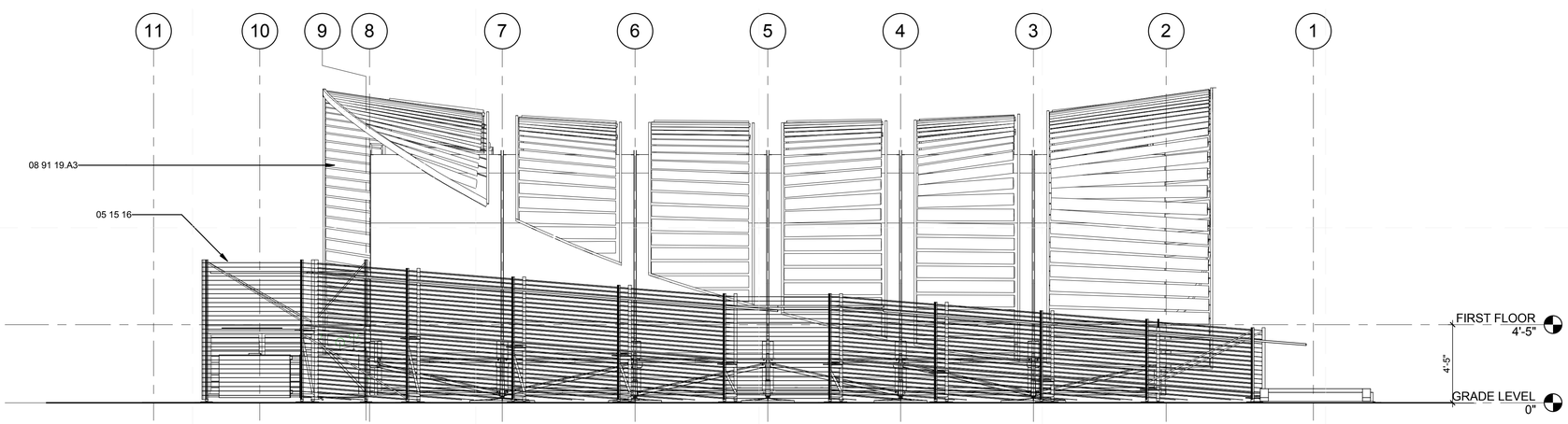

A1 NORTH ELEVATION
1/4" = 1'-0"

0 2' 4' 8'

GENERAL SHEET NOTES

REFERENCE KEYNOTES

05 12 36.A65	L5X3X0.25
05 15 16	STEEL WIRE ROPE ASSEMBLIES
08 35 13.33	PANEL FOLDING DOORS
08 91 19.A3	

SHEET KEYNOTES

teamhawai'i

halepilihonua

TEAM NAME: UNIVERSITY OF HAWAII (TEAM HAWAII)

ADDRESS: UNIVERSITY OF HAWAI'I AT MĀNOA
2410 CAMPUS ROAD
HONOLULU, HI 96822

CONTACT: ROCKWOOD@ARCH.HAWAII.EDU
WWW.SOLAR.HAWAII.EDU

CONSULTANTS

ARCHITECTURE:

ENGINEERS:

LANDSCAPING:

CODE CONSULTANTS:

CLIENT

U.S. DEPARTMENT OF ENERGY

SOLAR DECATHLON 2011

WWW.SOLARDECATHLON.GOV

U.S. DEPARTMENT OF ENERGY SOLAR DECATHLON

MARK	DATE	DESCRIPTION

LOT NUMBER:	306
DRAWN BY:	UNIVERSITY OF HAWAI'I
CHECKED BY:	CHECKER
COPYRIGHT:	UNIVERSITY OF HAWAI'I SCHOOL OF ARCHITECTURE

SHEET TITLE

ELEVATIONS

A-211

5/8/2011 1:56:56 PM

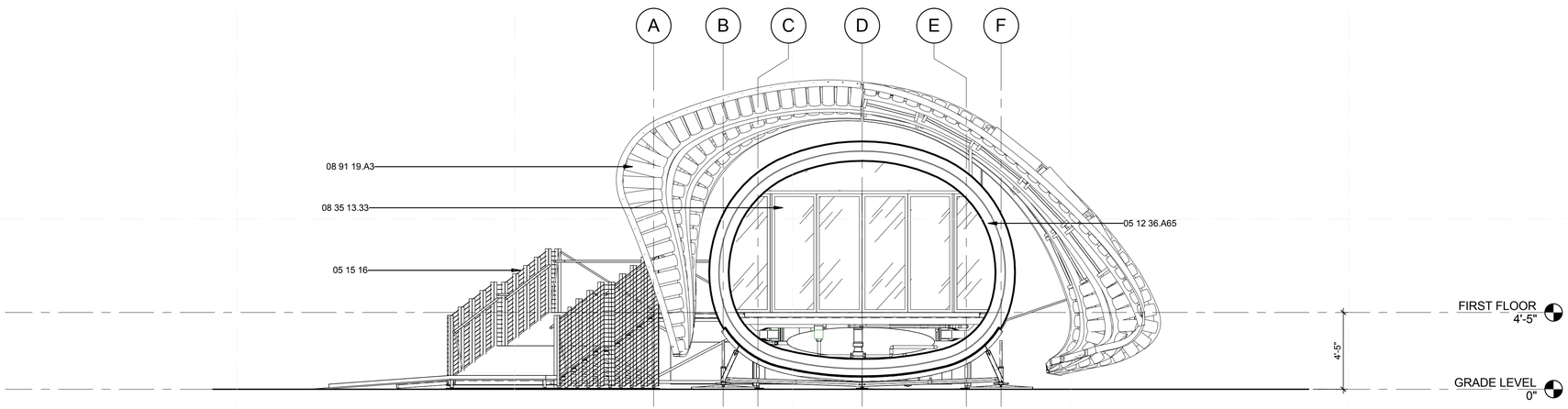

C1 WEST ELEVATION
1/4" = 1'-0"

0 2' 4' 8'

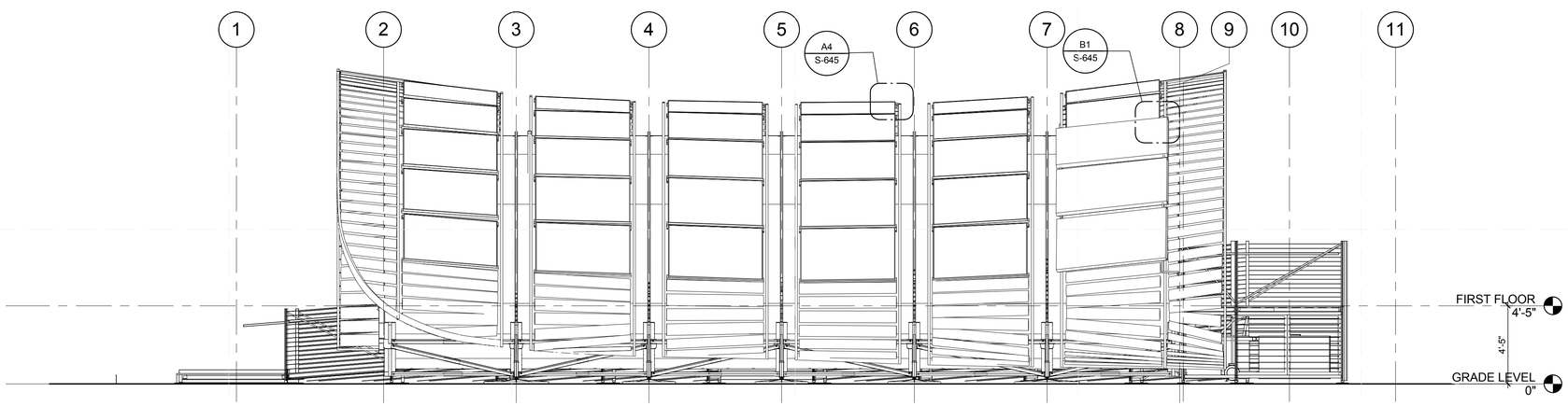

A1 SOUTH ELEVATION
1/4" = 1'-0"

0 2' 4' 8'

GENERAL SHEET NOTES

REFERENCE KEYNOTES

05 12 36.A65	L5X3X0.25
05 15 16	STEEL WIRE ROPE ASSEMBLIES
08 35 13.33	PANEL FOLDING DOORS
08 91 19.A3	

SHEET KEYNOTES

teamhawai'i

halepilihonua

TEAM NAME: UNIVERSITY OF HAWAII (TEAM HAWAII)

ADDRESS: UNIVERSITY OF HAWAI'I AT MĀNOA
2410 CAMPUS ROAD
HONOLULU, HI 96822

CONTACT: ROCKWOOD@ARCH.HAWAII.EDU
WWW.SOLAR.HAWAII.EDU

CONSULTANTS

ARCHITECTURE:

ENGINEERS:

LANDSCAPING:

CODE CONSULTANTS:

CLIENT

U.S. DEPARTMENT OF ENERGY

SOLAR DECATHLON 2011

WWW.SOLARDECATHLON.GOV

U.S. DEPARTMENT OF ENERGY SOLAR DECATHLON

MARK	DATE	DESCRIPTION

LOT NUMBER:	306
DRAWN BY:	UNIVERSITY OF HAWAI'I
CHECKED BY:	CHECKER
COPYRIGHT:	UNIVERSITY OF HAWAI'I SCHOOL OF ARCHITECTURE

SHEET TITLE

ELEVATIONS

A-212

5/8/2011 1:57:42 PM

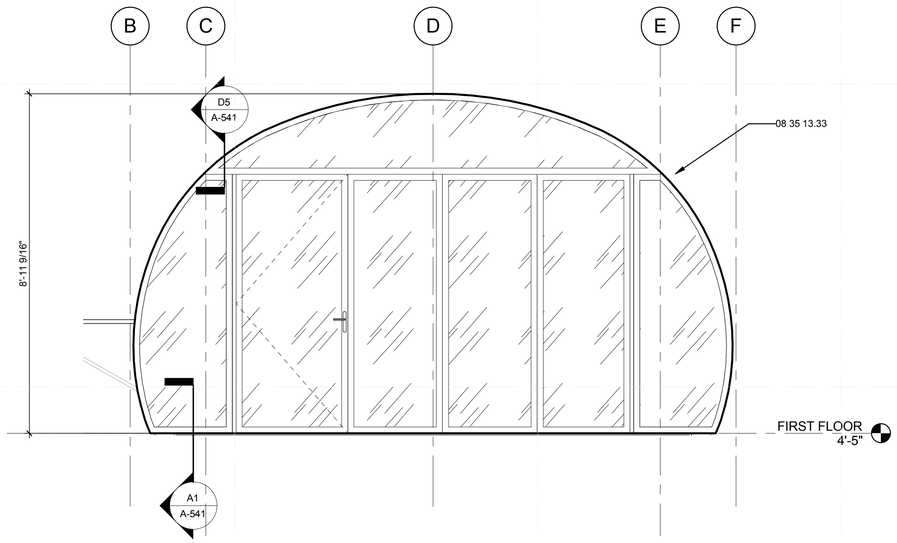

C1 EAST INTERIOR ELEVATION
1/2" = 1'-0"

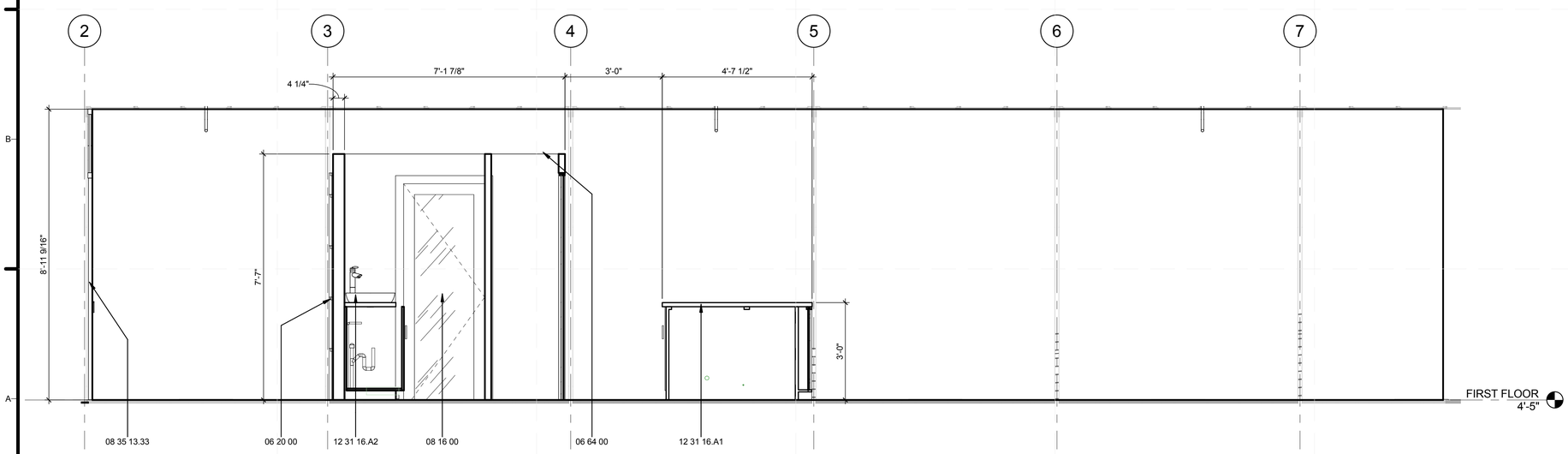

A1 SOUTH INTERIOR ELEVATION
1/2" = 1'-0"

GENERAL SHEET NOTES

REFERENCE KEYNOTES

06 20 00	FINISH CARPENTRY
06 64 00	PLASTIC PANELING
08 16 00	COMPOSITE DOORS
08 35 13.33	PANEL FOLDING DOORS
12 31 16.A1	KITCHEN COUNTER TOP W/ INTEGRATED SEAM LESS SINK
12 31 16.A2	VANITY COUNTER TOP W/ INTEGRATED SINK

SHEET KEYNOTES

teamhawai'i

halepilihonua

TEAM NAME: UNIVERSITY OF HAWAII (TEAM HAWAII)

ADDRESS: UNIVERSITY OF HAWAI'I AT MĀNOA
2410 CAMPUS ROAD
HONOLULU, HI 96822

CONTACT: ROCKWOOD@ARCH.HAWAII.EDU
WWW.SOLAR.HAWAII.EDU

CONSULTANTS

ARCHITECTURE:

ENGINEERS:

LANDSCAPING:

CODE CONSULTANTS:

CLIENT

U.S. DEPARTMENT OF ENERGY
SOLAR DECATHLON 2011
WWW.SOLARDECATHLON.GOV

U.S. DEPARTMENT OF ENERGY SOLAR DECATHLON

MARK	DATE	DESCRIPTION

LOT NUMBER:	306
DRAWN BY:	UNIVERSITY OF HAWAI'I
CHECKED BY:	CHECKER
COPYRIGHT:	UNIVERSITY OF HAWAI'I SCHOOL OF ARCHITECTURE

SHEET TITLE

INTERIOR ELEVATIONS

A-213

5/8/2011 1:57:50 PM

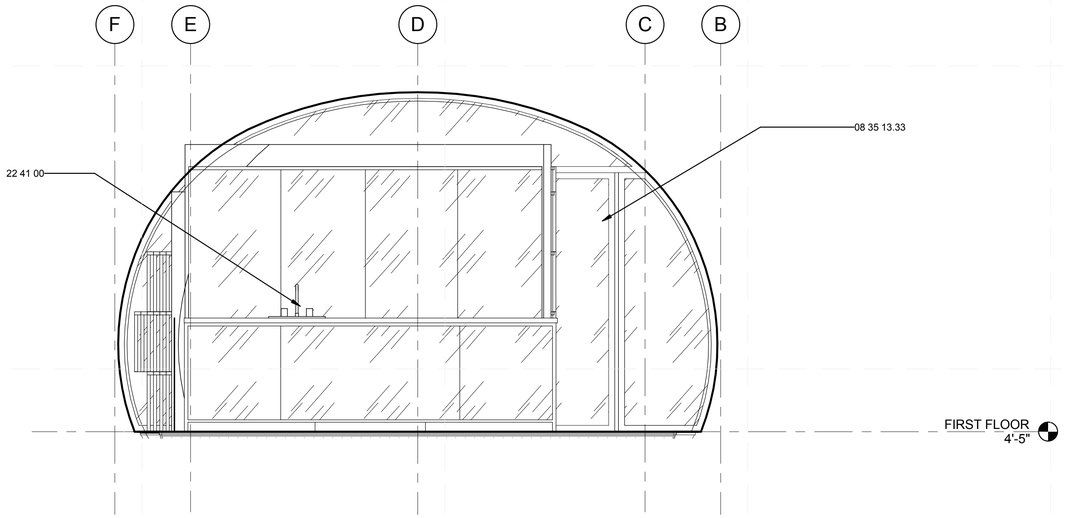

C1 WEST INTERIOR ELEVATION
1/2" = 1'-0"

0 1' 2' 4'

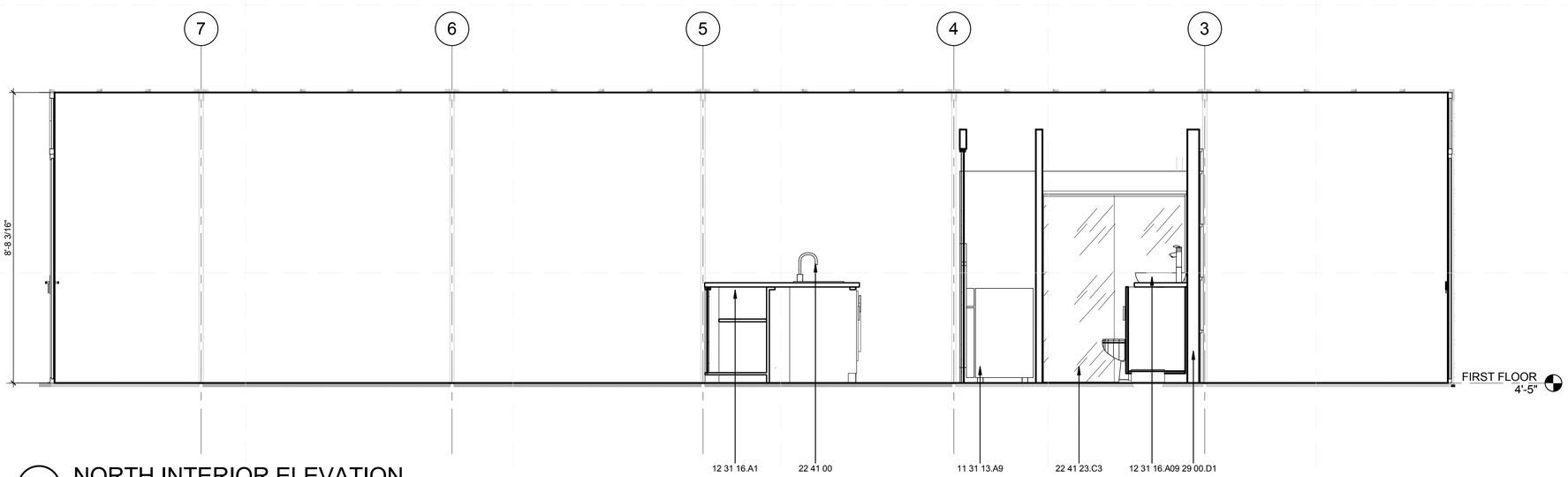

A1 NORTH INTERIOR ELEVATION
1/2" = 1'-0"

0 2' 4' 6'

GENERAL SHEET NOTES

REFERENCE KEYNOTES

08 35 13.33	PANEL FOLDING DOORS
09 29 00.D1	5/8" GYPSUM WALLBOARD
11 31 13.A9	FREEZER
12 31 16.A1	KITCHEN COUNTER TOP W/ INTEGRATED SEAM LESS SINK
12 31 16.A2	VANITY COUNTER TOP W/ INTEGRATED SINK
22 41 00	RESIDENTIAL PLUMBING FIXTURES
22 41 23.C3	SLIDING GLASS SHOWER DOOR

SHEET KEYNOTES

teamhawai'i

halepilihonua

TEAM NAME: UNIVERSITY OF HAWAII (TEAM HAWAII)

ADDRESS: UNIVERSITY OF HAWAI'I AT MĀNOA
2410 CAMPUS ROAD
HONOLULU, HI 96822

CONTACT: ROCKWOOD@ARCH.HAWAII.EDU
WWW.SOLAR.HAWAII.EDU

CONSULTANTS

ARCHITECTURE:

ENGINEERS:

LANDSCAPING:

CODE CONSULTANTS:

CLIENT

U.S. DEPARTMENT OF ENERGY
SOLAR DECATHLON 2011
WWW.SOLARDECATHLON.GOV

U.S. DEPARTMENT OF ENERGY SOLAR DECATHLON

MARK	DATE	DESCRIPTION

LOT NUMBER:	306
DRAWN BY:	UNIVERSITY OF HAWAI'I
CHECKED BY:	CHECKER
COPYRIGHT:	UNIVERSITY OF HAWAI'I SCHOOL OF ARCHITECTURE

SHEET TITLE

INTERIOR ELEVATIONS

A-214

5/8/2011 1:58:05 PM

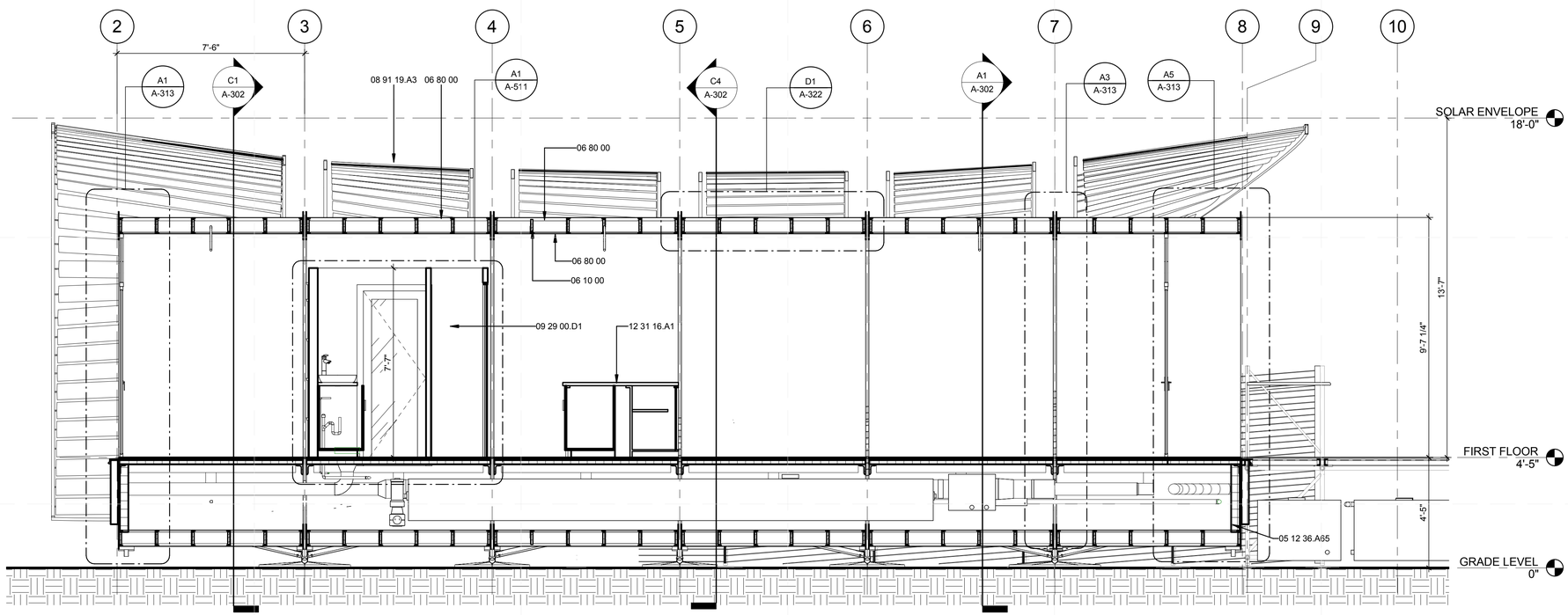

A1 LONGITUDINAL SECTION

3/8" = 1'-0"

0 2' 4' 6'

5/8/2011 1:38:25 PM

GENERAL SHEET NOTES

REFERENCE KEYNOTES

05 12 36.A65	L5X3X0.25
06 10 00	ROUGH CARPENTRY
06 80 00	COMPOSITE FABRICATIONS
08 91 19.A3	
09 29 00.D1	5/8" GYPSUM WALLBOARD
12 31 16.A1	KITCHEN COUNTER TOP W/ INTEGRATED SEAM LESS SINK

SHEET KEYNOTES

teamhawai'i

halepilihonua

TEAM NAME: UNIVERSITY OF HAWAII (TEAM HAWAII)

ADDRESS: UNIVERSITY OF HAWAI'I AT MĀNOA
2410 CAMPUS ROAD
HONOLULU, HI 96822

CONTACT: ROCKWOOD@ARCH.HAWAII.EDU
WWW.SOLAR.HAWAII.EDU

CONSULTANTS

ARCHITECTURE:

ENGINEERS:

LANDSCAPING:

CODE CONSULTANTS:

CLIENT

U.S. DEPARTMENT OF ENERGY

SOLAR DECATHLON 2011

WWW.SOLARDECATHLON.GOV

U.S. DEPARTMENT OF ENERGY SOLAR DECATHLON

MARK	DATE	DESCRIPTION

LOT NUMBER:	306
DRAWN BY:	UNIVERSITY OF HAWAI'I
CHECKED BY:	CHECKER
COPYRIGHT:	UNIVERSITY OF HAWAI'I SCHOOL OF ARCHITECTURE

SHEET TITLE

BUILDING SECTIONS

A-301

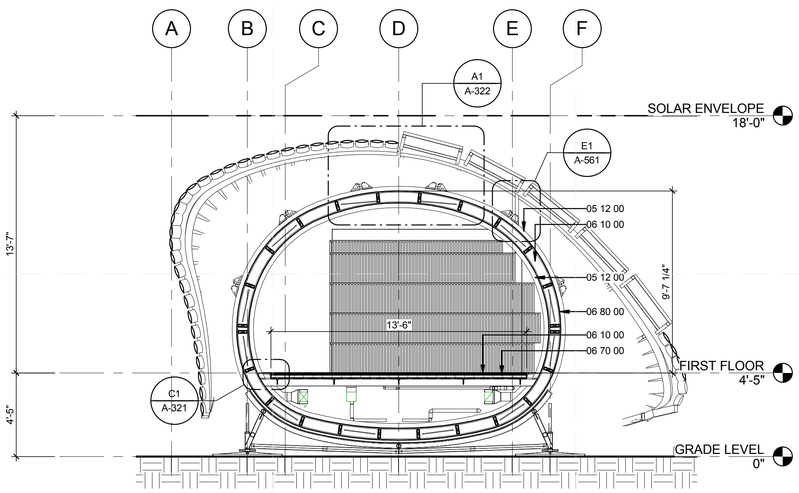

C1 TRANSVERSE SECTION 1

1/4" = 1'-0"

0 2' 4' 8'

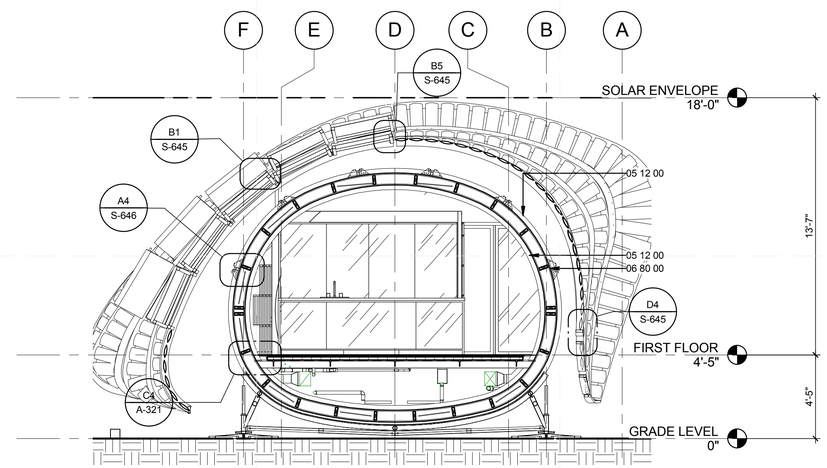

C4 TRANSVERSE SECTION 2

1/4" = 1'-0"

0 2' 4' 8'

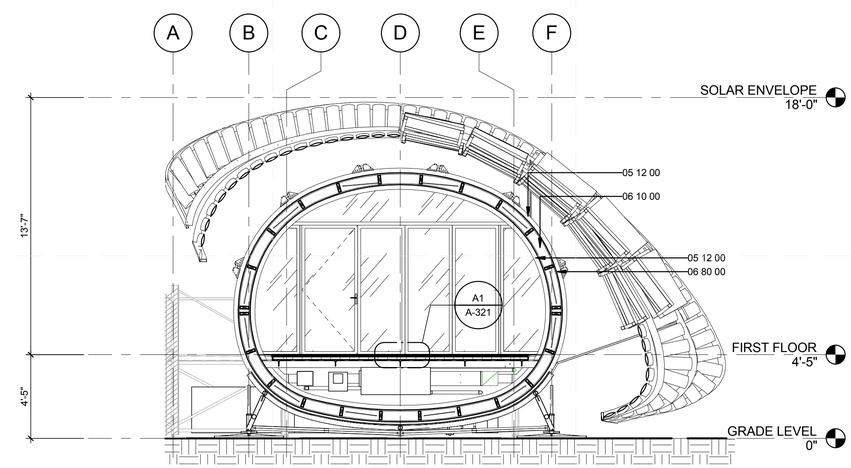

A1 TRANSVERSE SECTION 3

1/4" = 1'-0"

0 2' 4' 8'

GENERAL SHEET NOTES

REFERENCE KEYNOTES

05 12 00	STRUCTURAL STEEL FRAMING
06 10 00	ROUGH CARPENTRY
06 70 00	STRUCTURAL COMPOSITES
06 80 00	COMPOSITE FABRICATIONS

SHEET KEYNOTES

teamhawai'i

halepilihonua

TEAM NAME:	UNIVERSITY OF HAWAII (TEAM HAWAII)
ADDRESS:	UNIVERSITY OF HAWAI'I AT MĀNOA 2410 CAMPUS ROAD HONOLULU, HI 96822
CONTACT:	ROCKWOOD@ARCH.HAWAII.EDU WWW.SOLAR.HAWAII.EDU

CONSULTANTS

ARCHITECTURE:

ENGINEERS:

LANDSCAPING:

CODE CONSULTANTS:

CLIENT

U.S. DEPARTMENT OF ENERGY

SOLAR DECATHLON 2011

WWW.SOLARDECATHLON.GOV

U.S. DEPARTMENT OF ENERGY SOLAR DECATHLON

MARK	DATE	DESCRIPTION

LOT NUMBER:	306
DRAWN BY:	UNIVERSITY OF HAWAI'I
CHECKED BY:	CHECKER
COPYRIGHT:	UNIVERSITY OF HAWAI'I SCHOOL OF ARCHITECTURE

SHEET TITLE

BUILDING SECTIONS

A-302

5/6/2011 1:59:06 PM

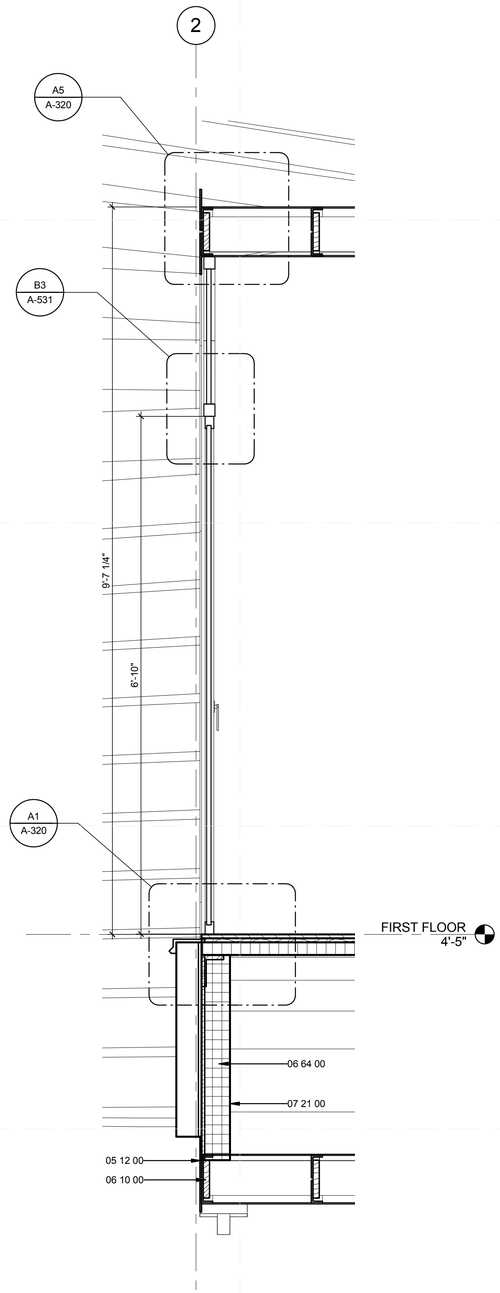

A1 WALL SECTION AT WEST END
1" = 1'-0"
0 1/2' 1' 2'

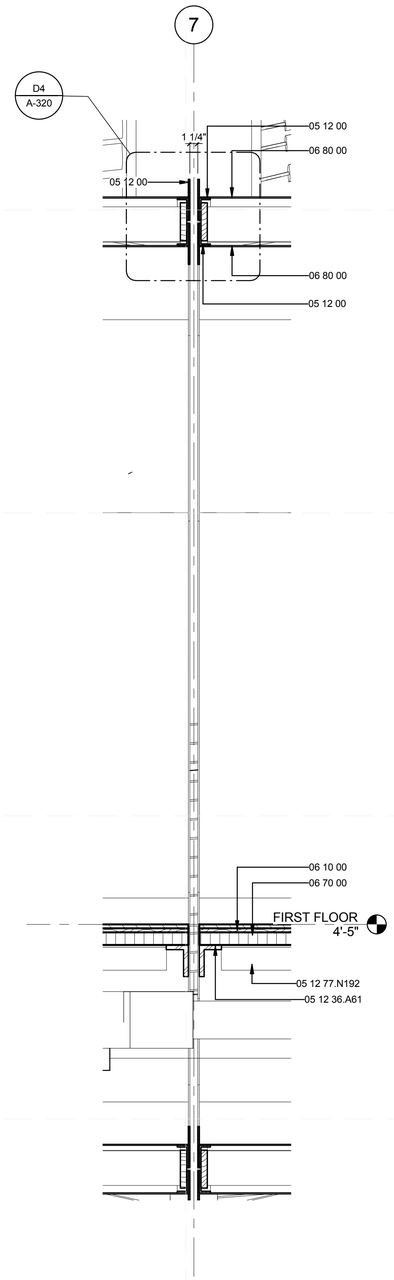

A3 WALL SECTION AT MODULE CONNECTION
1" = 1'-0"
0 1/2' 1' 2'

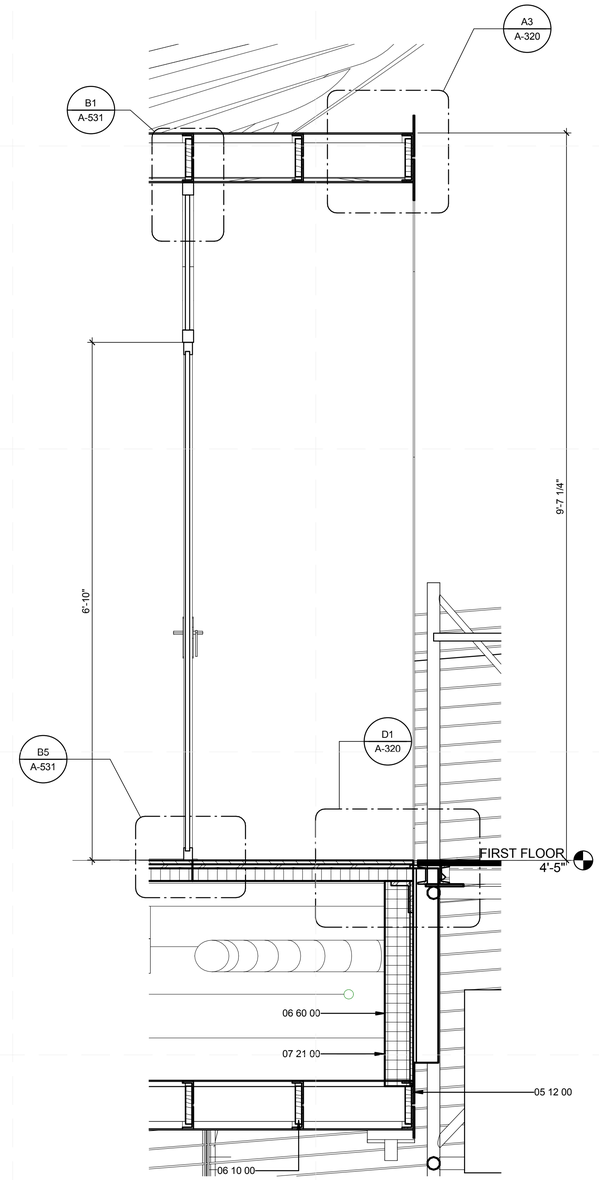

A5 WALL SECTION AT EAST END
1" = 1'-0"
0 1/2' 1' 2'

GENERAL SHEET NOTES

REFERENCE KEYNOTES

05 12 00	STRUCTURAL STEEL FRAMING
05 12 36.A61	L5X3X0.5
05 12 77.N192	WT4X12
06 10 00	ROUGH CARPENTRY
06 60 00	PLASTIC FABRICATIONS
06 64 00	PLASTIC PANELING
06 70 00	STRUCTURAL COMPOSITES
06 80 00	COMPOSITE FABRICATIONS
07 21 00	THERMAL INSULATION

SHEET NOTES

teamhawai'i
halepilihonua

TEAM NAME: UNIVERSITY OF HAWAII (TEAM HAWAII)
ADDRESS: UNIVERSITY OF HAWAI'I AT MĀNOA
2410 CAMPUS ROAD
HONOLULU, HI 96822
CONTACT: ROCKWOOD@ARCH.HAWAII.EDU
WWW.SOLAR.HAWAII.EDU

CONSULTANTS
ARCHITECTURE:
ENGINEERS:
LANDSCAPING:
CODE CONSULTANTS:

CLIENT
U.S. DEPARTMENT OF ENERGY
SOLAR DECATHLON 2011
WWW.SOLARDECATHLON.GOV
U.S. DEPARTMENT OF ENERGY SOLAR DECATHLON

MARK	DATE	DESCRIPTION

LOT NUMBER:	306
DRAWN BY:	UNIVERSITY OF HAWAI'I
CHECKED BY:	Checker
COPYRIGHT:	UNIVERSITY OF HAWAI'I SCHOOL OF ARCHITECTURE

SHEET TITLE
WALL SECTIONS AT WEST AND EAST END

A-313

5/9/2011 1:59:33 PM

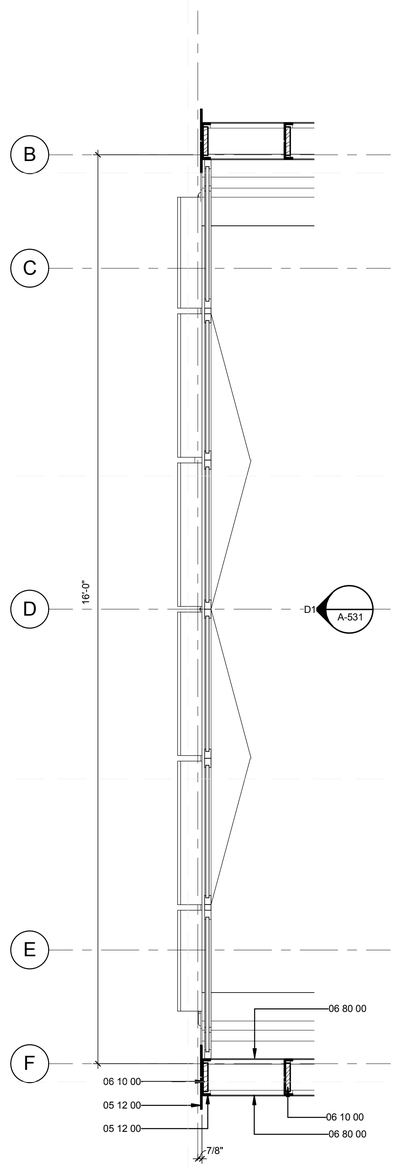

A1 WALL PLAN AT WEST END
3/4" = 1'-0"

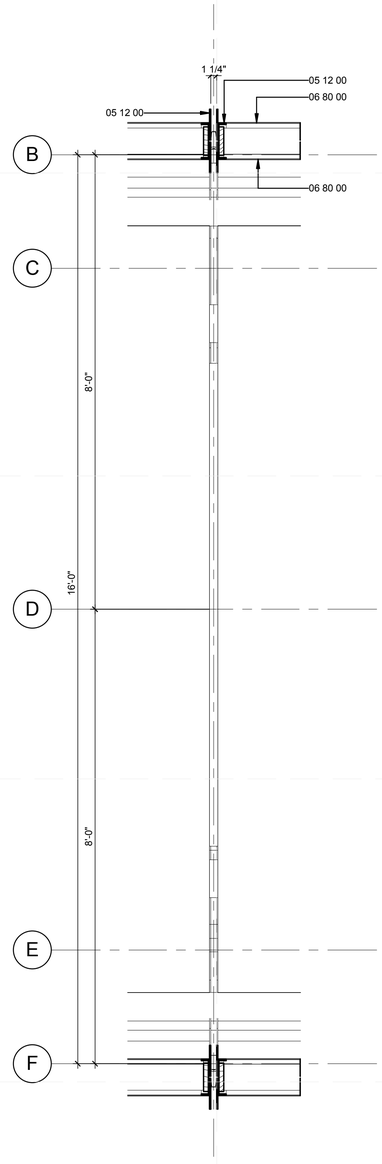

A3 WALL PLAN AT MODULE CONNECTION
3/4" = 1'-0"

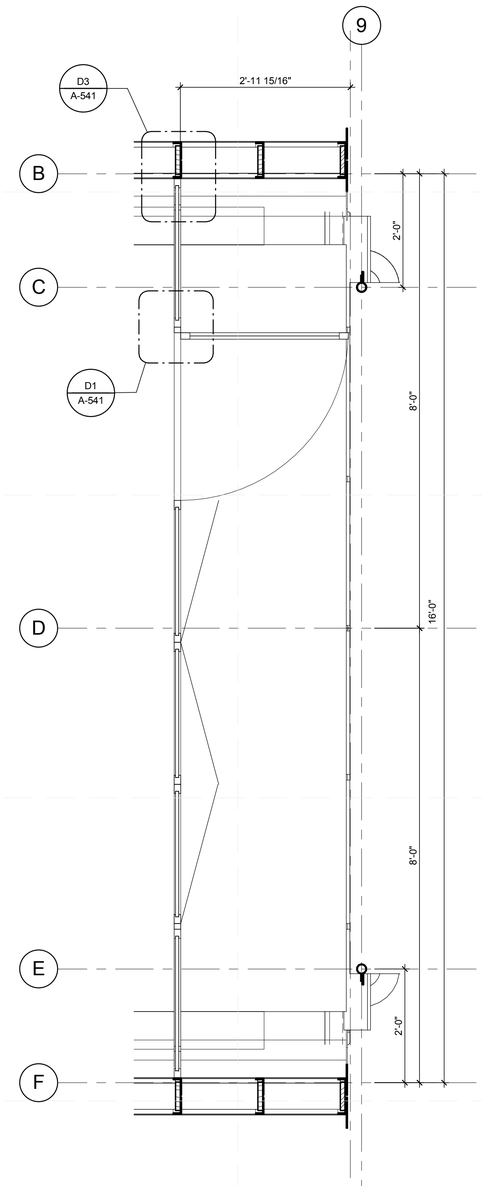

A5 WALL PLAN AT EAST END
3/4" = 1'-0"

GENERAL SHEET NOTES

REFERENCE KEYNOTES

05 12 00	STRUCTURAL STEEL FRAMING
06 10 00	ROUGH CARPENTRY
06 80 00	COMPOSITE FABRICATIONS

SHEET KEYNOTES

teamhawai'i
halepilihonua

TEAM NAME: UNIVERSITY OF HAWAII (TEAM HAWAII)
ADDRESS: UNIVERSITY OF HAWAI'I AT MĀNOA
2410 CAMPUS ROAD
HONOLULU, HI 96822
CONTACT: ROCKWOOD@ARCH.HAWAII.EDU
WWW.SOLAR.HAWAII.EDU

CONSULTANTS
ARCHITECTURE:
ENGINEERS:
LANDSCAPING:
CODE CONSULTANTS:

CLIENT
U.S. DEPARTMENT OF ENERGY
SOLAR DECATHLON 2011
WWW.SOLARDECATHLON.GOV

U.S. DEPARTMENT OF ENERGY
SOLAR DECATHLON

MARK	DATE	DESCRIPTION

LOT NUMBER:	306
DRAWN BY:	UNIVERSITY OF HAWAI'I
CHECKED BY:	Checker
COPYRIGHT:	UNIVERSITY OF HAWAI'I SCHOOL OF ARCHITECTURE

SHEET TITLE
WALL PLAN AT WEST AND EAST END

A-314

5/9/2011 1:59:44 PM

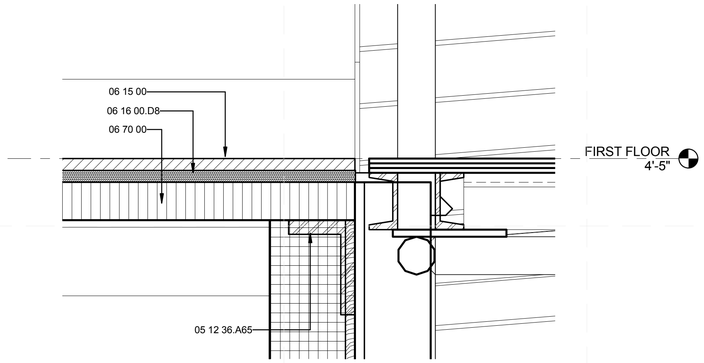

D1 EAST END FLOOR SECTION

3" = 1'-0"

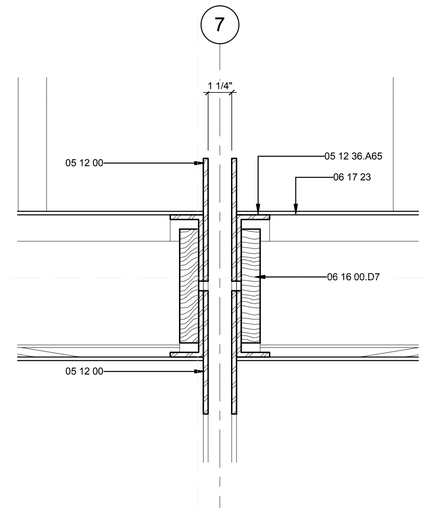

D4 MIDPOINT MODULE CONNECTION ROOF DETAIL

3" = 1'-0"

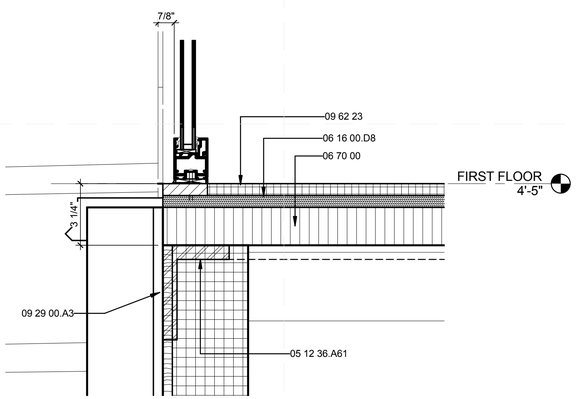

A1 WEST END FLOOR SECTION

3" = 1'-0"

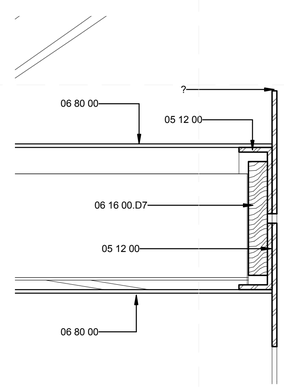

A3 EAST END ROOF DETAIL

3" = 1'-0"

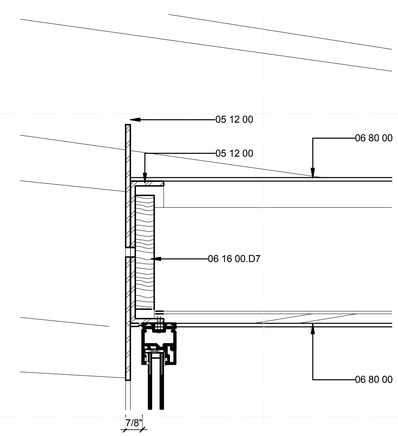

A5 WEST END ROOF DETAIL

3" = 1'-0"

GENERAL SHEET NOTES

REFERENCE KEYNOTES

05 12 00	STRUCTURAL STEEL FRAMING
05 12 36.A61	L5X3X0.5
05 12 36.A65	L5X3X0.25
06 15 00	WOOD DECKING
06 16 00.D7	1/2" EXTERIOR GRADE PLYWOOD
06 16 00.D8	5/8" PLYWOOD
06 17 23	PARALLEL STRAND LUMBER
06 70 00	STRUCTURAL COMPOSITES
06 80 00	COMPOSITE FABRICATIONS
08 40 00	ENTRANCES, STOREFRONTS, AND CURTAIN WALLS
09 29 00.A3	1/2" GYPSUM WALLBOARD
09 62 23	BAMBOO FLOORING

SHEET KEYNOTES

teamhawai'i

halepilihonua

TEAM NAME: UNIVERSITY OF HAWAII (TEAM HAWAII)

ADDRESS: UNIVERSITY OF HAWAI'I AT MĀNOA
2410 CAMPUS ROAD
HONOLULU, HI 96822

CONTACT: ROCKWOOD@ARCH.HAWAII.EDU
WWW.SOLAR.HAWAII.EDU

CONSULTANTS

ARCHITECTURE:

ENGINEERS:

LANDSCAPING:

CODE CONSULTANTS:

CLIENT

U.S. DEPARTMENT OF ENERGY

SOLAR DECATHLON 2011

WWW.SOLARDECATHLON.GOV

U.S. DEPARTMENT OF ENERGY SOLAR DECATHLON

MARK	DATE	DESCRIPTION

LOT NUMBER:	306
DRAWN BY:	UNIVERSITY OF HAWAI'I
CHECKED BY:	Checker
COPYRIGHT:	UNIVERSITY OF HAWAI'I SCHOOL OF ARCHITECTURE

SHEET TITLE

FLOOR SECTIONS AND DETAILS

A-320

5/8/2011 2:00:13 PM

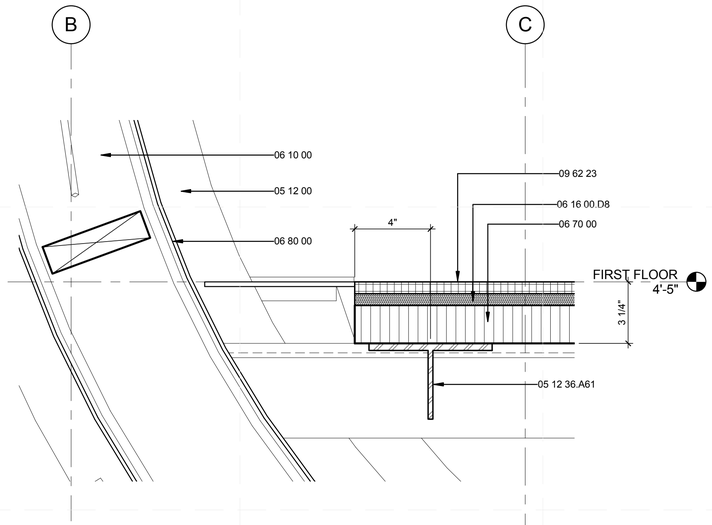

C1 SOUTH FLOOR TO WALL CONNECTION DETAIL
3" = 1'-0"

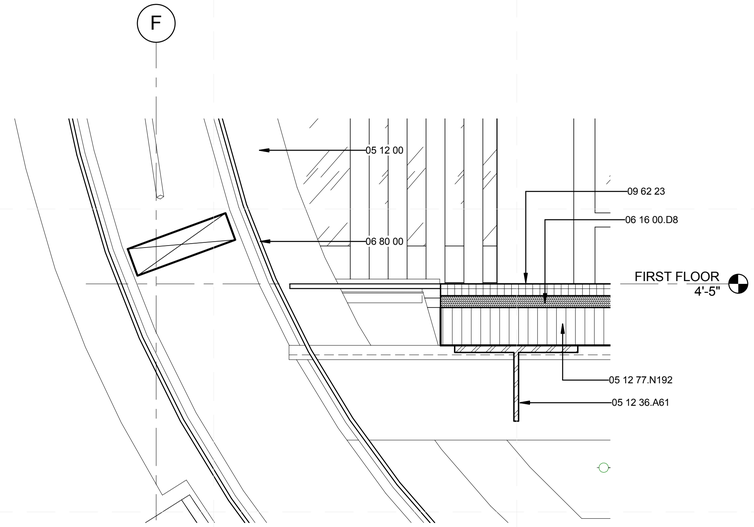

C4 FLOOR TRANSVERSE SECTION 2
3" = 1'-0"

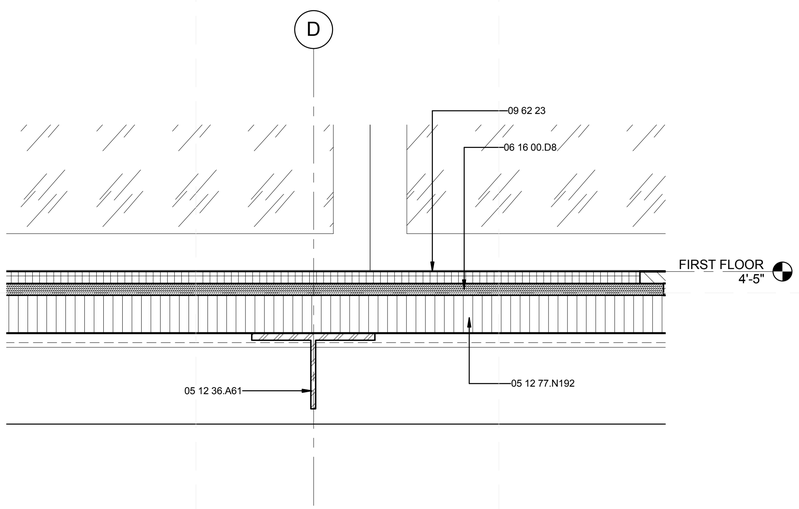

A1 FLOOR TRANSVERSE SECTION
3" = 1'-0"

GENERAL SHEET NOTES

REFERENCE KEYNOTES

05 12 00	STRUCTURAL STEEL FRAMING
05 12 36.A61	L5X3X0.5
05 12 77.N192	WT4X12
06 10 00	ROUGH CARPENTRY
06 16 00.D8	5/8" PLYWOOD
06 70 00	STRUCTURAL COMPOSITES
06 80 00	COMPOSITE FABRICATIONS
09 62 23	BAMBOO FLOORING

SHEET KEYNOTES

teamhawai'i

halepilihonua

TEAM NAME: UNIVERSITY OF HAWAII (TEAM HAWAII)

ADDRESS: UNIVERSITY OF HAWAI'I AT MĀNOA
2410 CAMPUS ROAD
HONOLULU, HI 96822

CONTACT: ROCKWOOD@ARCH.HAWAII.EDU
WWW.SOLAR.HAWAII.EDU

CONSULTANTS

ARCHITECTURE:

ENGINEERS:

LANDSCAPING:

CODE CONSULTANTS:

CLIENT

U.S. DEPARTMENT OF ENERGY

SOLAR DECATHLON 2011

WWW.SOLARDECATHLON.GOV

U.S. DEPARTMENT OF ENERGY SOLAR DECATHLON

MARK	DATE	DESCRIPTION

LOT NUMBER:	306
DRAWN BY:	UNIVERSITY OF HAWAI'I
CHECKED BY:	CHECKER
COPYRIGHT:	UNIVERSITY OF HAWAI'I SCHOOL OF ARCHITECTURE

SHEET TITLE

FLOOR SECTIONS AND DETAILS

A-321

5/9/2011 2:00:32 PM

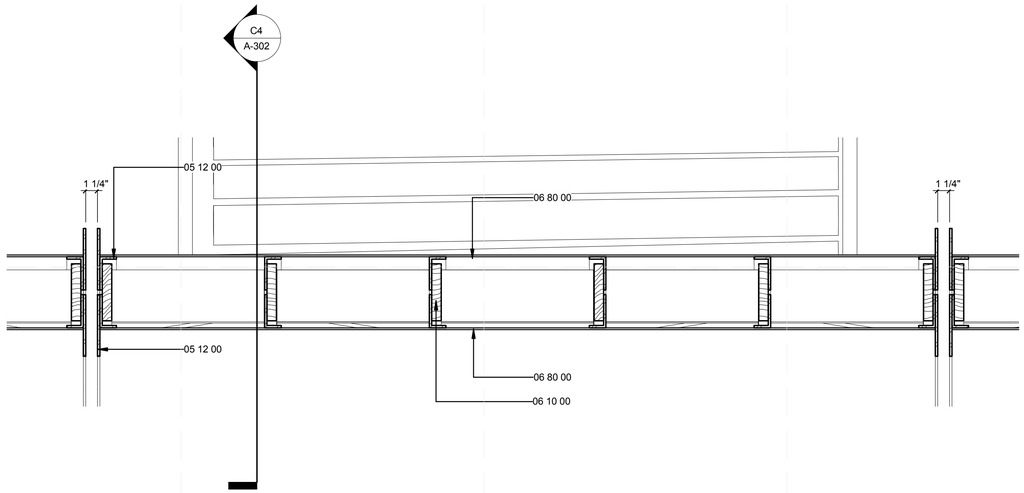

D1 LONGITUDINAL ROOF SECTION
1 1/2" = 1'-0"

0 1/2" 1' 1 1/2'

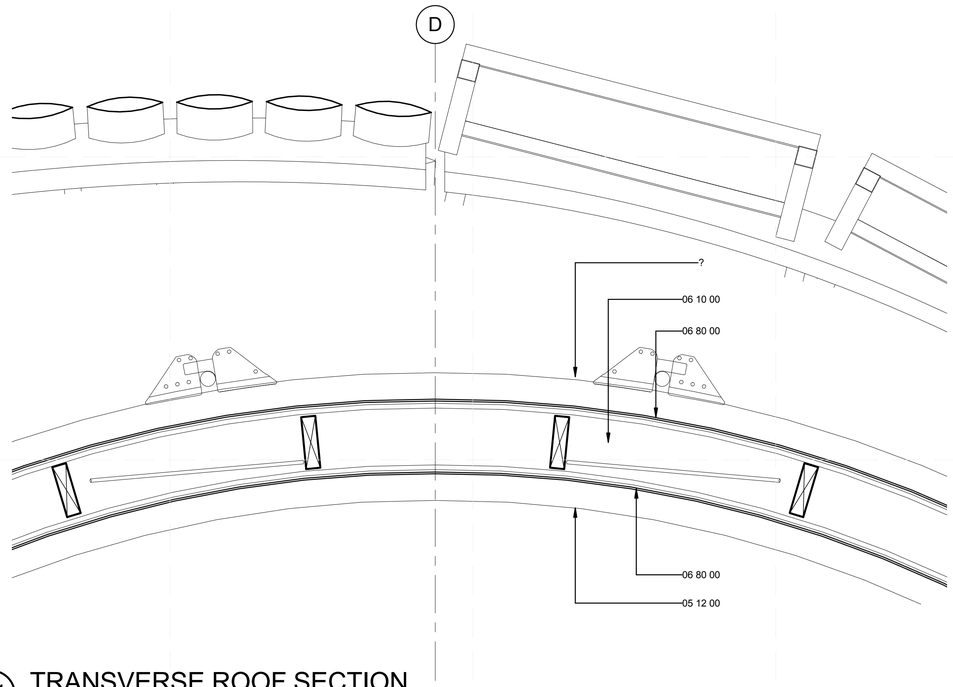

A1 TRANSVERSE ROOF SECTION
1 1/2" = 1'-0"

0 1/2" 1' 1 1/2'

GENERAL SHEET NOTES

REFERENCE KEYNOTES

05 12 00	STRUCTURAL STEEL FRAMING
06 10 00	ROUGH CARPENTRY
06 80 00	COMPOSITE FABRICATIONS

SHEET KEYNOTES

teamhawai'i

halepilihonua

TEAM NAME:	UNIVERSITY OF HAWAII (TEAM HAWAII)
ADDRESS:	UNIVERSITY OF HAWAI'I AT MĀNOA 2410 CAMPUS ROAD HONOLULU, HI 96822
CONTACT:	ROCKWOOD@ARCH.HAWAII.EDU WWW.SOLAR.HAWAII.EDU

CONSULTANTS

ARCHITECTURE:

ENGINEERS:

LANDSCAPING:

CODE CONSULTANTS:

CLIENT

U.S. DEPARTMENT OF ENERGY

SOLAR DECATHLON 2011

WWW.SOLARDECATHLON.GOV

U.S. DEPARTMENT OF ENERGY SOLAR DECATHLON

MARK	DATE	DESCRIPTION

LOT NUMBER:	306
DRAWN BY:	UNIVERSITY OF HAWAI'I
CHECKED BY:	CHECKER
COPYRIGHT:	UNIVERSITY OF HAWAI'I SCHOOL OF ARCHITECTURE

SHEET TITLE

ROOF SECTIONS

A-322

5/9/2011 2:00:49 PM

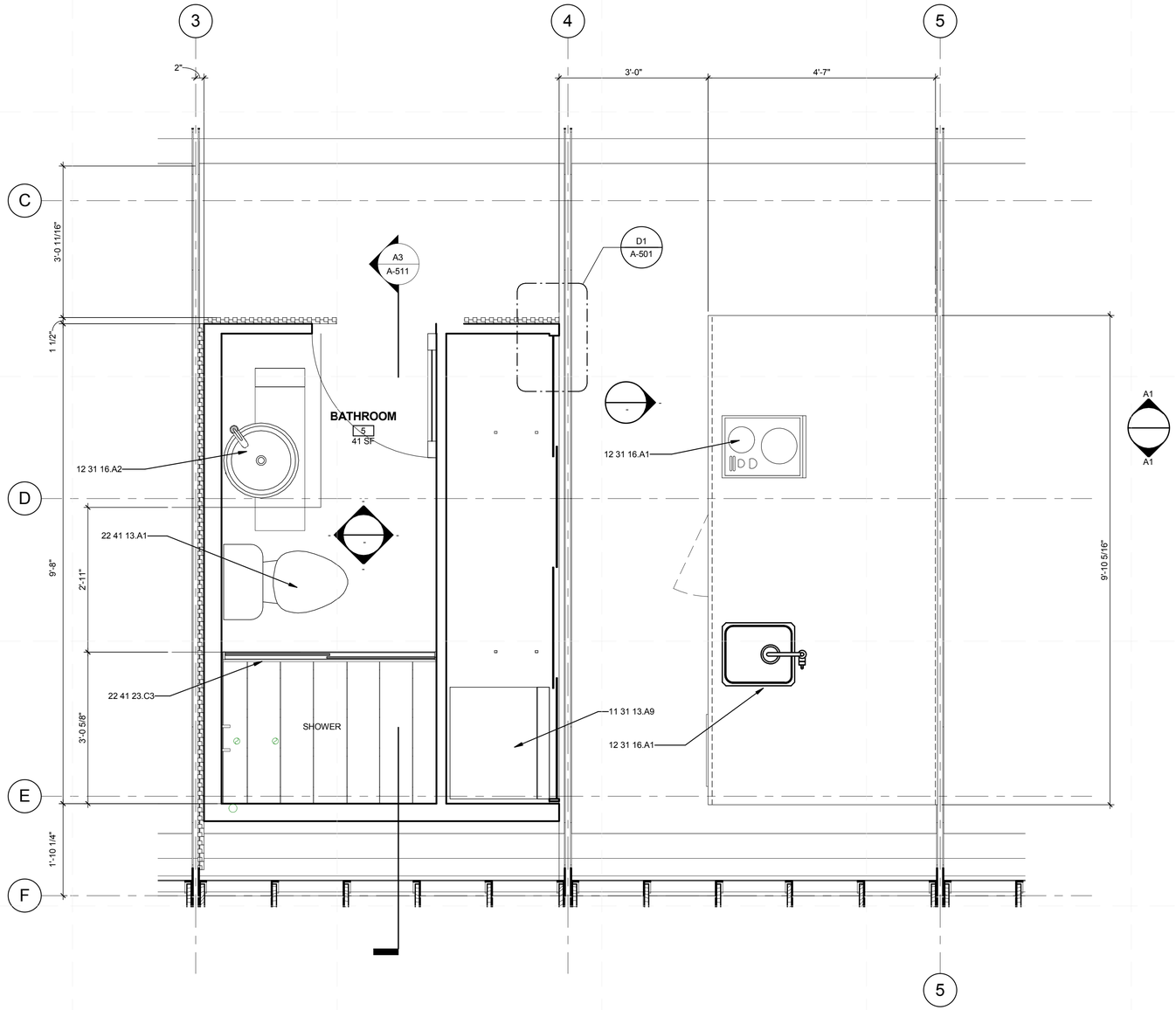

A1 BATH CORE & KITCHEN DETAIL PLAN

3/4" = 1'-0"

0 1' 2' 3'

5/8/2011 2:00:56 PM

GENERAL SHEET NOTES

REFERENCE KEYNOTES

11 31 13.A9	FREEZER
12 31 16.A1	KITCHEN COUNTER TOP W/ INTEGRATED SEAM LESS SINK
12 31 16.A2	VANITY COUNTER TOP W/ INTEGRATED SINK
22 41 13.A1	WATER CLOSET
22 41 23.C3	SLIDING GLASS SHOWER DOOR

SHEET KEYNOTES

teamhawai'i

halepilihonua

TEAM NAME:	UNIVERSITY OF HAWAII (TEAM HAWAII)
ADDRESS:	UNIVERSITY OF HAWAI'I AT MĀNOA 2410 CAMPUS ROAD HONOLULU, HI 96822
CONTACT:	ROCKWOOD@ARCH.HAWAII.EDU WWW.SOLAR.HAWAII.EDU

CONSULTANTS

ARCHITECTURE:

ENGINEERS:

LANDSCAPING:

CODE CONSULTANTS:

CLIENT

U.S. DEPARTMENT OF ENERGY

SOLAR DECATHLON 2011

WWW.SOLARDECATHLON.GOV

U.S. DEPARTMENT OF ENERGY SOLAR DECATHLON

MARK	DATE	DESCRIPTION

LOT NUMBER:	306
DRAWN BY:	UNIVERSITY OF HAWAI'I
CHECKED BY:	CHECKER
COPYRIGHT:	UNIVERSITY OF HAWAI'I SCHOOL OF ARCHITECTURE

SHEET TITLE

LARGE SCALE PLANS

A-401

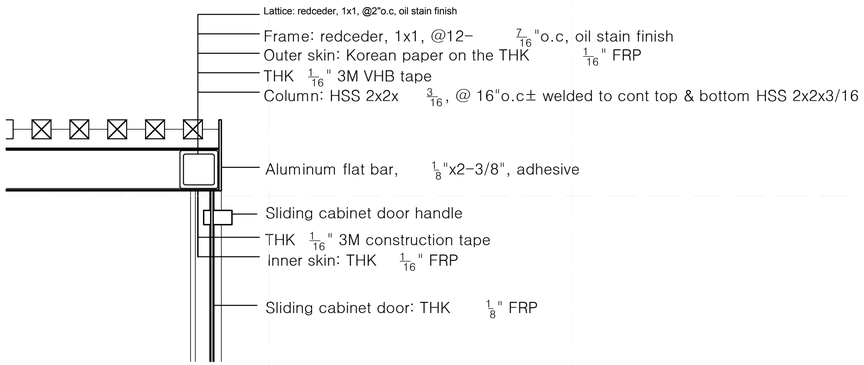

D1 BATH WALL PLAN DETAIL

3" = 1'-0"

0 3" 6" 1'

GENERAL SHEET NOTES

REFERENCE KEYNOTES

SHEET KEYNOTES

teamhawai'i

halepilihonua

TEAM NAME:	UNIVERSITY OF HAWAII (TEAM HAWAII)
ADDRESS:	UNIVERSITY OF HAWAI'I AT MĀNOA 2410 CAMPUS ROAD HONOLULU, HI 96822
CONTACT:	ROCKWOOD@ARCH.HAWAII.EDU WWW.SOLAR.HAWAII.EDU

CONSULTANTS

ARCHITECTURE:

ENGINEERS:

LANDSCAPING:

CODE CONSULTANTS:

CLIENT

U.S. DEPARTMENT OF ENERGY

SOLAR DECATHLON 2011

WWW.SOLARDECATHLON.GOV

U.S. DEPARTMENT OF ENERGY SOLAR DECATHLON

MARK	DATE	DESCRIPTION

LOT NUMBER:	306
DRAWN BY:	UNIVERSITY OF HAWAI'I
CHECKED BY:	CHECKER
COPYRIGHT:	UNIVERSITY OF HAWAI'I SCHOOL OF ARCHITECTURE

SHEET TITLE

PLAN DETAILS

A-501

5/8/2011 2:01:01 PM

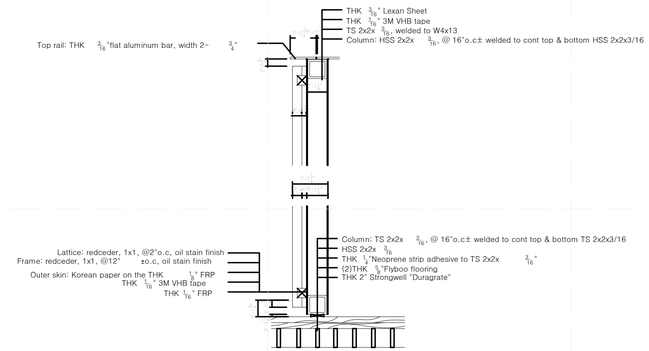

D1 BATH WALL SECTION DETAIL

1 1/2" = 1'-0"

0 1/2" 1' 1 1/2'

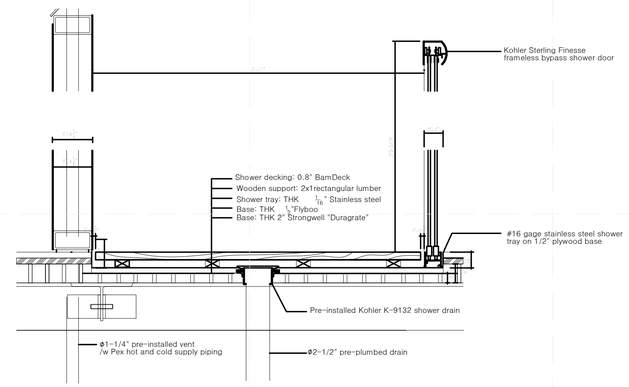

D4 BATH SHOWER PAN DETAIL

1 1/2" = 1'-0"

0 1/2" 1' 1 1/2'

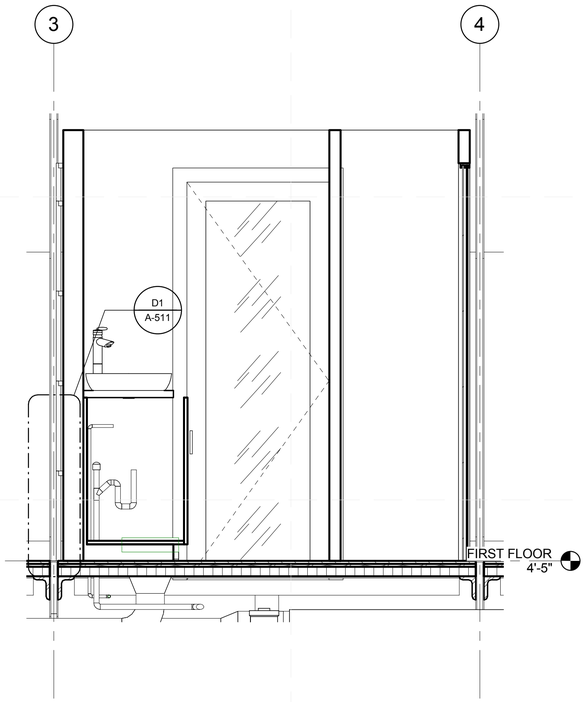

A1 BATHROOM CORE LONGITUDINAL SECTION

3/4" = 1'-0"

0 1' 2' 3'

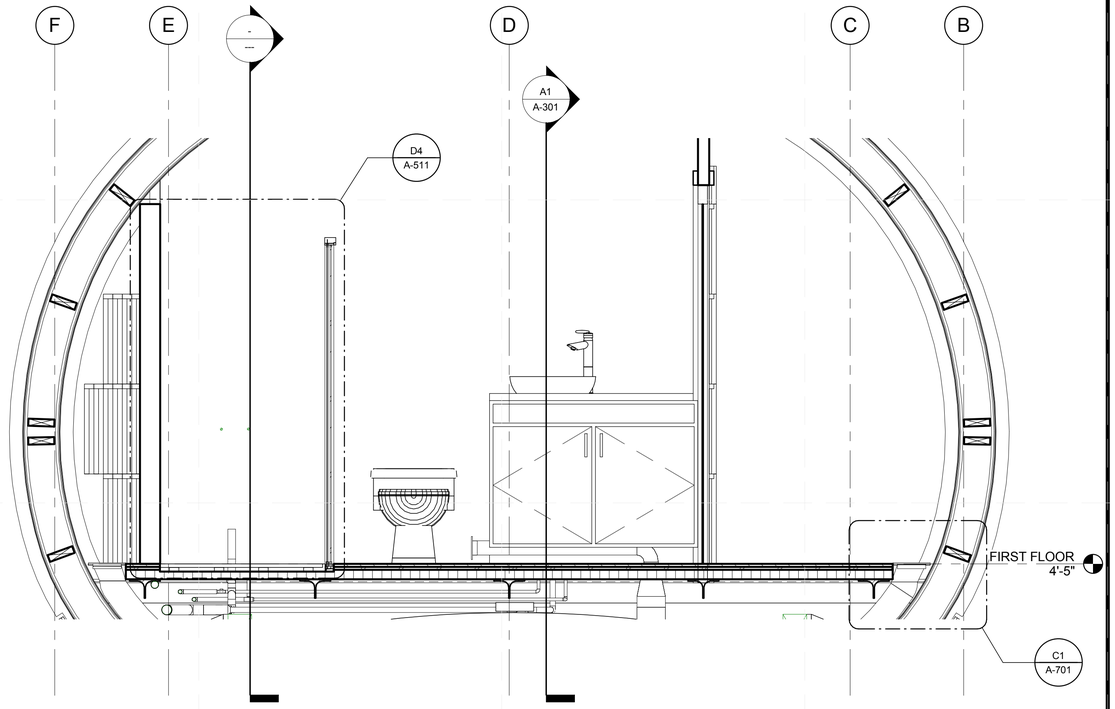

A3 BATHROOM CORE TRANSVERSE SECTION

3/4" = 1'-0"

0 1' 2' 3'

GENERAL SHEET NOTES

REFERENCE KEYNOTES

SHEET KEYNOTES

teamhawai'i

halepilihonua

TEAM NAME:	UNIVERSITY OF HAWAII (TEAM HAWAII)
ADDRESS:	UNIVERSITY OF HAWAI'I AT MĀNOA 2410 CAMPUS ROAD HONOLULU, HI 96822
CONTACT:	ROCKWOOD@ARCH.HAWAII.EDU WWW.SOLAR.HAWAII.EDU

CONSULTANTS

ARCHITECTURE:

ENGINEERS:

LANDSCAPING:

CODE CONSULTANTS:

CLIENT

U.S. DEPARTMENT OF ENERGY

SOLAR DECATHLON 2011

WWW.SOLARDECATHLON.GOV

U.S. DEPARTMENT OF ENERGY SOLAR DECATHLON

MARK	DATE	DESCRIPTION

LOT NUMBER:	306
DRAWN BY:	UNIVERSITY OF HAWAI'I
CHECKED BY:	CHECKER
COPYRIGHT:	UNIVERSITY OF HAWAI'I SCHOOL OF ARCHITECTURE

SHEET TITLE

SECTION DETAILS

A-511

5/8/2011 2:01:14 PM

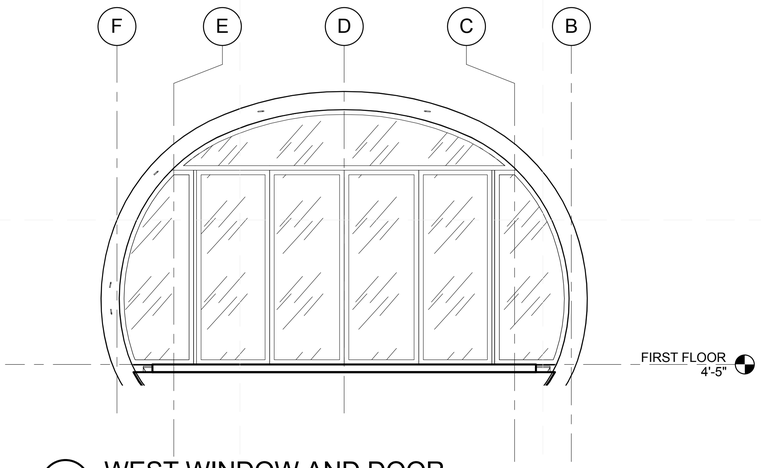

D1 WEST WINDOW AND DOOR
3/8" = 1'-0"

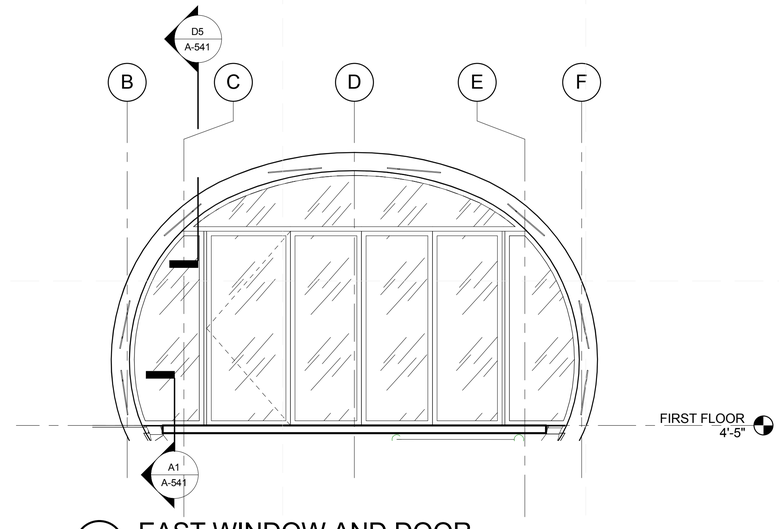

D4 EAST WINDOW AND DOOR
3/8" = 1'-0"

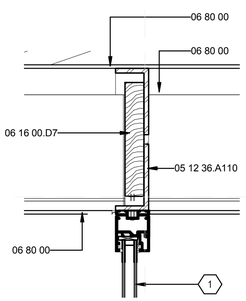

B1 TRANSOM HEAD DETAIL
3" = 1'-0"

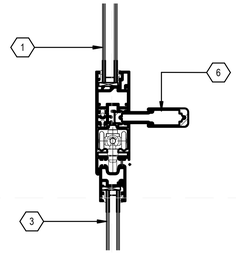

B3 DOOR HEAD DETAIL
3" = 1'-0"

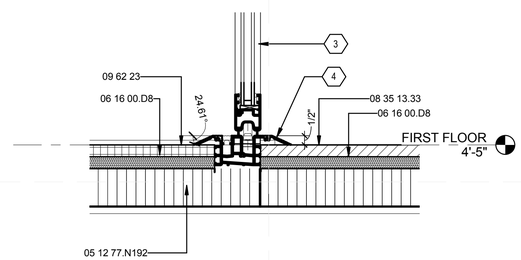

B5 DOOR SILL DETAIL
3" = 1'-0"

GENERAL SHEET NOTES

REFERENCE KEYNOTES

05 12 36.A110	L3X2.5X0.25
05 12 77.N192	WT4X12
06 16 00.D7	1/2" EXTERIOR GRADE PLYWOOD
06 16 00.D8	5/8" PLYWOOD
06 80 00	COMPOSITE FABRICATIONS
08 35 13.33	PANEL FOLDING DOORS
09 62 23	BAMBOO FLOORING

SHEET KEYNOTES

1	FIXED TRANSOM GLASS
3	FOLDING DOOR
4	THRESHOLD
6	HORIZONTAL SUPPORT PROFILE

teamhawai'i

halepilihonua

TEAM NAME: UNIVERSITY OF HAWAII (TEAM HAWAII)

ADDRESS: UNIVERSITY OF HAWAI'I AT MĀNOA
2410 CAMPUS ROAD
HONOLULU, HI 96822

CONTACT: ROCKWOOD@ARCH.HAWAII.EDU
WWW.SOLAR.HAWAII.EDU

CONSULTANTS

ARCHITECTURE:

ENGINEERS:

LANDSCAPING:

CODE CONSULTANTS:

CLIENT

U.S. DEPARTMENT OF ENERGY
SOLAR DECATHLON 2011
WWW.SOLARDECATHLON.GOV

U.S. DEPARTMENT OF ENERGY SOLAR DECATHLON

MARK	DATE	DESCRIPTION

LOT NUMBER:	306
DRAWN BY:	UNIVERSITY OF HAWAI'I
CHECKED BY:	CHECKER
COPYRIGHT:	UNIVERSITY OF HAWAI'I SCHOOL OF ARCHITECTURE

SHEET TITLE

WINDOW AND DOOR DETAILS

A-531

5/8/2011 2:01:28 PM

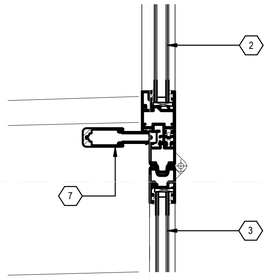

D1 DOOR JAMB DETAIL
3" = 1'-0"

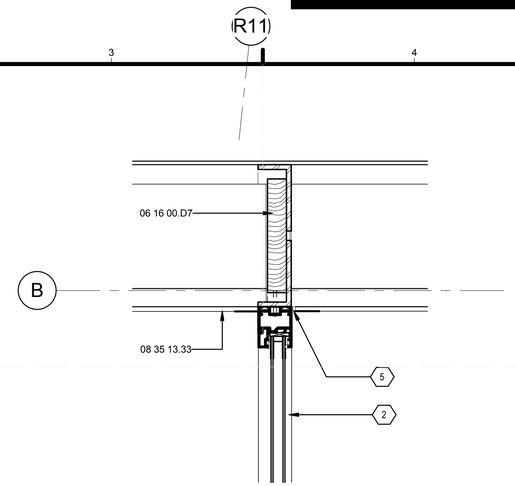

D3 FIXED WINDOW JAMB DETAIL
3" = 1'-0"

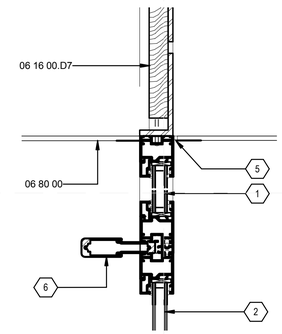

D5 FIXED WINDOW HEAD DETAIL
3" = 1'-0"

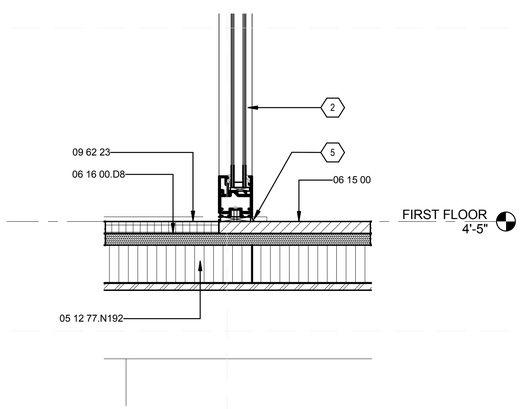

A1 FIXED WINDOW SILL DETAIL
3" = 1'-0"

GENERAL SHEET NOTES

REFERENCE KEYNOTES

05 12 77.N192	WT4X12
06 15 00	WOOD DECKING
06 16 00.D7	1/2" EXTERIOR GRADE PLYWOOD
06 16 00.D8	5/8" PLYWOOD
06 80 00	COMPOSITE FABRICATIONS
08 35 13.33	PANEL FOLDING DOORS
09 62 23	BAMBOO FLOORING

SHEET KEYNOTES

1	FIXED TRANSOM GLASS
2	FIXED SIDELITE GLASS
3	FOLDING DOOR
5	SEALANT
6	HORIZONTAL SUPPORT PROFILE
7	VERTICAL SUPPORT PROFILE

teamhawai'i

halepilihonua

TEAM NAME: UNIVERSITY OF HAWAII (TEAM HAWAII)

ADDRESS: UNIVERSITY OF HAWAI'I AT MĀNOA
2410 CAMPUS ROAD
HONOLULU, HI 96822

CONTACT: ROCKWOOD@ARCH.HAWAII.EDU
WWW.SOLAR.HAWAII.EDU

CONSULTANTS

ARCHITECTURE:

ENGINEERS:

LANDSCAPING:

CODE CONSULTANTS:

CLIENT

U.S. DEPARTMENT OF ENERGY

SOLAR DECATHLON 2011

WWW.SOLARDECATHLON.GOV

U.S. DEPARTMENT OF ENERGY SOLAR DECATHLON

MARK	DATE	DESCRIPTION

LOT NUMBER:	306
DRAWN BY:	UNIVERSITY OF HAWAI'I
CHECKED BY:	CHECKER
COPYRIGHT:	UNIVERSITY OF HAWAI'I SCHOOL OF ARCHITECTURE

SHEET TITLE

WINDOW AND DOOR DETAILS

A-541

5/8/2011 2:01:45 PM

GENERAL SHEET NOTES

1. GENERAL SHEET NOTES
2. GENERAL SHEET NOTES 2
3. GENERAL SHEET NOTES 3
4. GENERAL SHEET NOTES 4
5. GENERAL SHEET NOTES 5
6. GENERAL SHEET NOTES 6
7. GENERAL SHEET NOTES 7
8. GENERAL SHEET NOTES 8

REFERENCE KEYNOTES

SHEET KEYNOTES

teamhawai'i

halepilihonua

TEAM NAME: UNIVERSITY OF HAWAII (TEAM HAWAII)

ADDRESS: UNIVERSITY OF HAWAI'I AT MĀNOA
2410 CAMPUS ROAD
HONOLULU, HI 96822

CONTACT: ROCKWOOD@ARCH.HAWAII.EDU
WWW.SOLAR.HAWAII.EDU

CONSULTANTS

ARCHITECTURE:

ENGINEERS:

LANDSCAPING:

CODE CONSULTANTS:

CLIENT

U.S. DEPARTMENT OF ENERGY

SOLAR DECATHLON 2011

WWW.SOLARDECATHLON.GOV

U.S. DEPARTMENT OF ENERGY SOLAR DECATHLON

MARK	DATE	DESCRIPTION

LOT NUMBER:	306
DRAWN BY:	UNIVERSITY OF HAWAI'I
CHECKED BY:	CHECKER
COPYRIGHT:	UNIVERSITY OF HAWAI'I SCHOOL OF ARCHITECTURE

SHEET TITLE

PV MOUNTING DETAILS

A-551

5/8/2011 2:01:49 PM

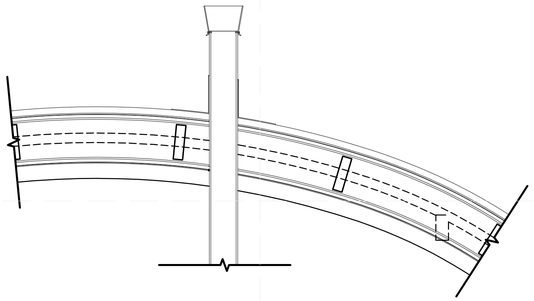

E1 ROOF PLUMBING VENT PENETRATION

1" = 1'-0"

0 1' 2' 3'

GENERAL SHEET NOTES

REFERENCE KEYNOTES

SHEET KEYNOTES

teamhawai'i

halepilihonua

TEAM NAME: UNIVERSITY OF HAWAII (TEAM HAWAII)

ADDRESS: UNIVERSITY OF HAWAI'I AT MĀNOA
2410 CAMPUS ROAD
HONOLULU, HI 96822

CONTACT: ROCKWOOD@ARCH.HAWAII.EDU
WWW.SOLAR.HAWAII.EDU

CONSULTANTS

ARCHITECTURE:

ENGINEERS:

LANDSCAPING:

CODE CONSULTANTS:

CLIENT

U.S. DEPARTMENT OF ENERGY

SOLAR DECATHLON 2011

WWW.SOLARDECATHLON.GOV

U.S. DEPARTMENT OF ENERGY SOLAR DECATHLON

MARK	DATE	DESCRIPTION

LOT NUMBER: 306

DRAWN BY: UNIVERSITY OF HAWAI'I

CHECKED BY: CHECKER

COPYRIGHT: UNIVERSITY OF HAWAI'I
SCHOOL OF ARCHITECTURE

SHEET TITLE

ROOF DETAILS

A-561

5/8/2011 2:01:53 PM

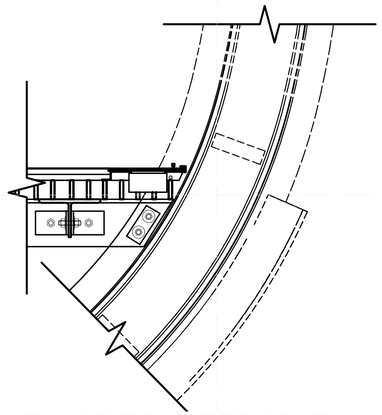

C1 FLOOR REGISTER SECTION DETAIL

1 1/2" = 1'-0"

0 1/2" 1' 1 1/2"

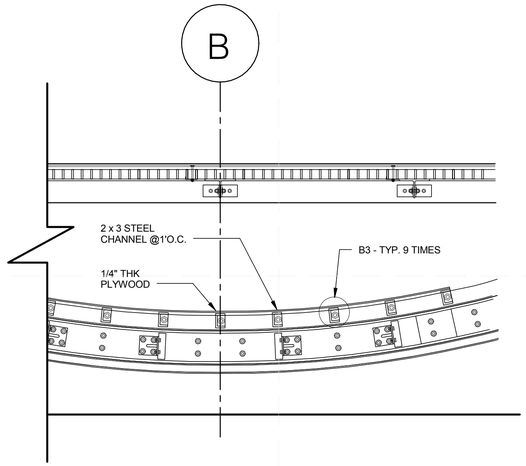

1 MECHANICAL FLOOR SECTION

3" = 1'-0"

0 3" 6" 1'

GENERAL SHEET NOTES

REFERENCE KEYNOTES

SHEET KEYNOTES

teamhawai'i

halepilihonua

TEAM NAME: UNIVERSITY OF HAWAII (TEAM HAWAII)

ADDRESS: UNIVERSITY OF HAWAI'I AT MĀNOA
2410 CAMPUS ROAD
HONOLULU, HI 96822

CONTACT: ROCKWOOD@ARCH.HAWAII.EDU
WWW.SOLAR.HAWAII.EDU

CONSULTANTS

ARCHITECTURE:

ENGINEERS:

LANDSCAPING:

CODE CONSULTANTS:

CLIENT

U.S. DEPARTMENT OF ENERGY

SOLAR DECATHLON 2011

WWW.SOLARDECATHLON.GOV

U.S. DEPARTMENT OF ENERGY SOLAR DECATHLON

MARK	DATE	DESCRIPTION

LOT NUMBER: 306

DRAWN BY: UNIVERSITY OF HAWAI'I

CHECKED BY: CHECKER

COPYRIGHT: UNIVERSITY OF HAWAI'I
SCHOOL OF ARCHITECTURE

SHEET TITLE

TYPICAL DETAILS

A-701

5/8/2011 2:01:59 PM

teamhawai'i

halepilihonua

TEAM NAME:	UNIVERSITY OF HAWAII (TEAM HAWAII)
ADDRESS:	UNIVERSITY OF HAWAI'I AT MĀNOA 2410 CAMPUS ROAD HONOLULU, HI 96822
CONTACT:	ROCKWOOD@ARCH.HAWAII.EDU WWW.SOLAR.HAWAII.EDU

CONSULTANTS

ARCHITECTURE:

ENGINEERS:

LANDSCAPING:

CODE CONSULTANTS:

CLIENT

U.S. DEPARTMENT OF ENERGY

SOLAR DECATHLON 2011

WWW.SOLARDECATHLON.GOV

U.S. DEPARTMENT OF ENERGY SOLAR DECATHLON

MARK	DATE	DESCRIPTION

LOT NUMBER:	306
DRAWN BY:	UNIVERSITY OF HAWAI'I
CHECKED BY:	Checker
COPYRIGHT:	UNIVERSITY OF HAWAI'I SCHOOL OF ARCHITECTURE

SHEET TITLE

INTERIOR SYMBOLS AND NOTES

I-001

5/8/2011 2:16:00 PM

teamhawai'i

halepilihonua

TEAM NAME: UNIVERSITY OF HAWAII (TEAM HAWAII)

ADDRESS: UNIVERSITY OF HAWAI'I AT MĀNOA
2410 CAMPUS ROAD
HONOLULU, HI 96822

CONTACT: ROCKWOOD@ARCH.HAWAII.EDU
WWW.SOLAR.HAWAII.EDU

CONSULTANTS

ARCHITECTURE:

ENGINEERS:

LANDSCAPING:

CODE CONSULTANTS:

CLIENT

U.S. DEPARTMENT OF ENERGY

SOLAR DECATHLON 2011

WWW.SOLARDECATHLON.GOV

U.S. DEPARTMENT OF ENERGY SOLAR DECATHLON

MARK	DATE	DESCRIPTION

LOT NUMBER: 306

DRAWN BY: UNIVERSITY OF HAWAI'I

CHECKED BY: Checker

COPYRIGHT: UNIVERSITY OF HAWAI'I
SCHOOL OF ARCHITECTURE

SHEET TITLE

INTERIOR DESIGN PLAN

I-101

5/8/2011 2:16:02 PM

teamhawai'i

halepilihonua

TEAM NAME:	UNIVERSITY OF HAWAII (TEAM HAWAII)
ADDRESS:	UNIVERSITY OF HAWAI'I AT MĀNOA 2410 CAMPUS ROAD HONOLULU, HI 96822
CONTACT:	ROCKWOOD@ARCH.HAWAII.EDU WWW.SOLAR.HAWAII.EDU

CONSULTANTS

ARCHITECTURE:

ENGINEERS:

LANDSCAPING:

CODE CONSULTANTS:

CLIENT

U.S. DEPARTMENT OF ENERGY

SOLAR DECATHLON 2011

WWW.SOLARDECATHLON.GOV

U.S. DEPARTMENT OF ENERGY SOLAR DECATHLON

MARK	DATE	DESCRIPTION

LOT NUMBER:	306
DRAWN BY:	UNIVERSITY OF HAWAI'I
CHECKED BY:	Checker
COPYRIGHT:	UNIVERSITY OF HAWAI'I SCHOOL OF ARCHITECTURE

SHEET TITLE

INTERIOR FURNISHING PLAN

I-102

5/8/2011 2:16:05 PM

teamhawai'i

halepilihonua

TEAM NAME:	UNIVERSITY OF HAWAII (TEAM HAWAII)
ADDRESS:	UNIVERSITY OF HAWAI'I AT MĀNOA 2410 CAMPUS ROAD HONOLULU, HI 96822
CONTACT:	ROCKWOOD@ARCH.HAWAII.EDU WWW.SOLAR.HAWAII.EDU

CONSULTANTS

ARCHITECTURE:

ENGINEERS:

LANDSCAPING:

CODE CONSULTANTS:

CLIENT

U.S. DEPARTMENT OF ENERGY

SOLAR DECATHLON 2011

WWW.SOLARDECATHLON.GOV

U.S. DEPARTMENT OF ENERGY SOLAR DECATHLON

MARK	DATE	DESCRIPTION

LOT NUMBER:	306
DRAWN BY:	UNIVERSITY OF HAWAI'I
CHECKED BY:	Checker
COPYRIGHT:	UNIVERSITY OF HAWAI'I SCHOOL OF ARCHITECTURE

SHEET TITLE

INTERIOR DESIGN REFLECTED CEILING PLAN

I-103

5/8/2011 2:16:07 PM

teamhawai'i

halepilihonua

TEAM NAME:	UNIVERSITY OF HAWAII (TEAM HAWAII)
ADDRESS:	UNIVERSITY OF HAWAI'I AT MĀNOA 2410 CAMPUS ROAD HONOLULU, HI 96822
CONTACT:	ROCKWOOD@ARCH.HAWAII.EDU WWW.SOLAR.HAWAII.EDU

CONSULTANTS

ARCHITECTURE:

ENGINEERS:

LANDSCAPING:

CODE CONSULTANTS:

CLIENT

U.S. DEPARTMENT OF ENERGY

SOLAR DECATHLON 2011

WWW.SOLARDECATHLON.GOV

U.S. DEPARTMENT OF ENERGY SOLAR DECATHLON

MARK	DATE	DESCRIPTION

LOT NUMBER:	306
DRAWN BY:	UNIVERSITY OF HAWAI'I
CHECKED BY:	Checker
COPYRIGHT:	UNIVERSITY OF HAWAI'I SCHOOL OF ARCHITECTURE

SHEET TITLE

INTERIOR DESIGN ELEVATIONS

I-201

5/8/2011 2:16:09 PM

teamhawai'i

halepilihonua

TEAM NAME: UNIVERSITY OF HAWAII (TEAM HAWAII)

ADDRESS: UNIVERSITY OF HAWAI'I AT MĀNOA
2410 CAMPUS ROAD
HONOLULU, HI 96822

CONTACT: ROCKWOOD@ARCH.HAWAII.EDU
WWW.SOLAR.HAWAII.EDU

CONSULTANTS

ARCHITECTURE:

ENGINEERS:

LANDSCAPING:

CODE CONSULTANTS:

CLIENT

U.S. DEPARTMENT OF ENERGY

SOLAR DECATHLON 2011

WWW.SOLARDECATHLON.GOV

U.S. DEPARTMENT OF ENERGY SOLAR DECATHLON

MARK	DATE	DESCRIPTION

LOT NUMBER: 306

DRAWN BY: UNIVERSITY OF HAWAI'I

CHECKED BY: Checker

COPYRIGHT: UNIVERSITY OF HAWAI'I
SCHOOL OF ARCHITECTURE

SHEET TITLE

INTERIOR DESIGN ELEVATIONS

I-202

5/8/2011 2:16:11 PM

teamhawai'i

halepilihonua

TEAM NAME:	UNIVERSITY OF HAWAII (TEAM HAWAII)
ADDRESS:	UNIVERSITY OF HAWAI'I AT MĀNOA 2410 CAMPUS ROAD HONOLULU, HI 96822
CONTACT:	ROCKWOOD@ARCH.HAWAII.EDU WWW.SOLAR.HAWAII.EDU

CONSULTANTS

ARCHITECTURE:

ENGINEERS:

LANDSCAPING:

CODE CONSULTANTS:

CLIENT

U.S. DEPARTMENT OF ENERGY

SOLAR DECATHLON 2011

WWW.SOLARDECATHLON.GOV

U.S. DEPARTMENT OF ENERGY SOLAR DECATHLON

MARK	DATE	DESCRIPTION

LOT NUMBER:	306
DRAWN BY:	UNIVERSITY OF HAWAI'I
CHECKED BY:	Checker
COPYRIGHT:	UNIVERSITY OF HAWAI'I SCHOOL OF ARCHITECTURE

SHEET TITLE

LARGE-SCALE INTERIOR DESIGN PLANS

I-401

5/8/2011 2:16:13 PM

teamhawai'i

halepilihonua

TEAM NAME:	UNIVERSITY OF HAWAII (TEAM HAWAII)
ADDRESS:	UNIVERSITY OF HAWAI'I AT MĀNOA 2410 CAMPUS ROAD HONOLULU, HI 96822
CONTACT:	ROCKWOOD@ARCH.HAWAII.EDU WWW.SOLAR.HAWAII.EDU

CONSULTANTS

ARCHITECTURE:

ENGINEERS:

LANDSCAPING:

CODE CONSULTANTS:

CLIENT

U.S. DEPARTMENT OF ENERGY

SOLAR DECATHLON 2011

WWW.SOLARDECATHLON.GOV

U.S. DEPARTMENT OF ENERGY SOLAR DECATHLON

MARK	DATE	DESCRIPTION

LOT NUMBER:	306
DRAWN BY:	UNIVERSITY OF HAWAI'I
CHECKED BY:	Checker
COPYRIGHT:	UNIVERSITY OF HAWAI'I SCHOOL OF ARCHITECTURE

SHEET TITLE

INTERIOR DESIGN DETAILS

I-501

5/8/2011 2:16:15 PM

teamhawai'i

halepilihonua

TEAM NAME:	UNIVERSITY OF HAWAII (TEAM HAWAII)
ADDRESS:	UNIVERSITY OF HAWAI'I AT MĀNOA 2410 CAMPUS ROAD HONOLULU, HI 96822
CONTACT:	ROCKWOOD@ARCH.HAWAII.EDU WWW.SOLAR.HAWAII.EDU

CONSULTANTS

ARCHITECTURE:

ENGINEERS:

LANDSCAPING:

CODE CONSULTANTS:

CLIENT

U.S. DEPARTMENT OF ENERGY

SOLAR DECATHLON 2011

WWW.SOLARDECATHLON.GOV

U.S. DEPARTMENT OF ENERGY SOLAR DECATHLON

MARK	DATE	DESCRIPTION

LOT NUMBER:	306
DRAWN BY:	UNIVERSITY OF HAWAI'I
CHECKED BY:	Checker
COPYRIGHT:	UNIVERSITY OF HAWAI'I SCHOOL OF ARCHITECTURE

SHEET TITLE

INTERIOR DESIGN SCHEDULES

I-601

5/8/2011 2:16:17 PM

FIRE PROTECTION NOTES

1. THE FIRE SUPPRESSION SYSTEM WAS DESIGNED ACCORDING TO INTERNATIONAL RESIDENTIAL CODE STANDARDS.
2. THE SLOPE OF CEILING IS GREATER THAN 1/3 BUT LESS THAN 2/3. FROM THE SPRINKLER SPECIFICATION SHEET, THE SINGLE SPRINKLER'S MAXIMUM COVERAGE AREA IS SELECTED TO 18" X 18", AND THEN THE MINIMUM FLOW RATE IS 19GPM AND MINIMUM PRESSURE IS 15PSI. ACCORDING TO IRC2009 SECTION P2904.4.2, TWO SPRINKLERS RUN SIMULTANEOUSLY FOR 7 MINUTES, AND THEN THE MINIMUM WATER CONSUMPTION IS 266 GALLONS. APPROXIMATELY 280 GALLONS OF WATER WILL BE DEVOTED TO THIS FIRE SUPPRESSION SYSTEM AND WILL BE STORED IN A 300 GALLON TANK IN THE UNDER PORCH AREA.
3. THE PRESSURE NEEDED FOR FIRE SUPPRESSION WILL BE PROVIDED BY A 3 HP CENTRIFUGAL PUMP. THIS PUMP WAS SIZED AFTER PERFORMING A FLOW PRESSURE SIMULATION BY THERMAL ENGINEERING CORPORATION.
4. THE FIRE SPRINKLER LINES ARE PEX PIPING RATED FOR FIRE SUPPRESSION SYSTEMS. THESE PIPES ARE FLEXIBLE ARE ABLE TO BE ROUTED THROUGH THE SHELL STRUCTURE OF THE HOUSE. THEY WILL PENETRATE THE SHELL IN THE UNDERFLOOR AREA. EXCESS PEX PIPING WILL BE FITTED INTO THE SHELL STRUCTURE TO ACCOMMODATE FOR MULTIPLE CONNECTIONS AND DISCONNECTIONS FOR OFF-SITE ASSEMBLY AND DISASSEMBLY.

FIRE PROTECTION LEGEND

SYMBOL	ABBRV.	DESCRIPTION
		BREAK LINE
	CV	CHECK VALVE
		FLOW DIRECTION ARROW
	GV	GATE VALVE
	P	PUMP
SD	SD	SMOKE DETECTOR
	SHP	SPRINKLER HEAD - PENDANT
	U	UNION
	DV	DRAIN VALVE

teamhawai'i

halepilihonua

TEAM NAME: UNIVERSITY OF HAWAII (TEAM HAWAII)

ADDRESS: UNIVERSITY OF HAWAI'I AT MĀNOA
2410 CAMPUS ROAD
HONOLULU, HI 96822

CONTACT: ROCKWOOD@ARCH.HAWAII.EDU
WWW.SOLAR.HAWAII.EDU

CONSULTANTS

ARCHITECTURE:

ENGINEERS:

LANDSCAPING:

CODE CONSULTANTS:

CLIENT

U.S. DEPARTMENT OF ENERGY

SOLAR DECATHLON 2011

WWW.SOLARDECATHLON.GOV

U.S. DEPARTMENT OF ENERGY SOLAR DECATHLON

MARK	DATE	DESCRIPTION

LOT NUMBER: 306

DRAWN BY: UNIVERSITY OF HAWAI'I

CHECKED BY: CHECKER

COPYRIGHT: UNIVERSITY OF HAWAI'I
SCHOOL OF ARCHITECTURE

SHEET TITLE

FIRE PROTECTION NOTES AND SYMBOLS

F-001

5/8/2011 2:04:46 PM

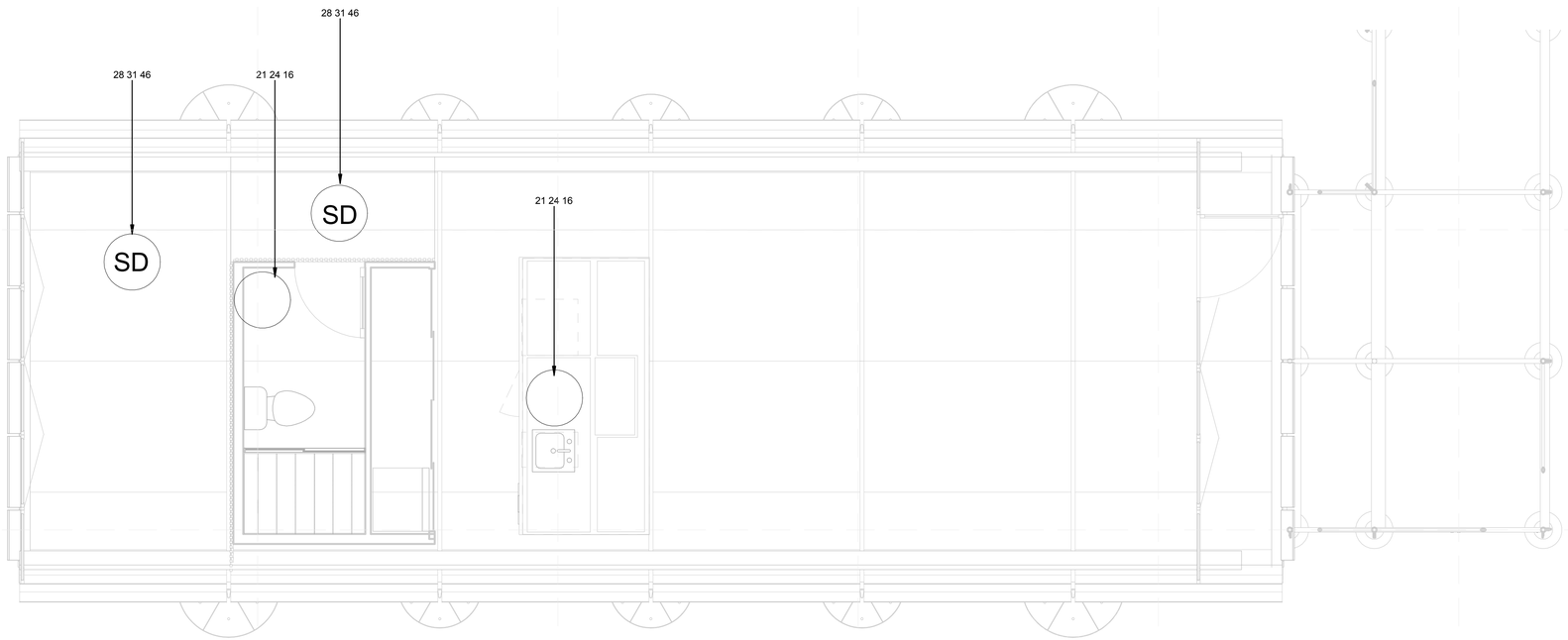

A1 FIRE DETECTION AND ALARM PLAN
3/8" = 1'-0"

0 2' 4' 6'

GENERAL SHEET NOTES

REFERENCE KEYNOTES

21 24 16	DRY-CHEMICAL FIRE-EXTINGUISHER EQUIPMENT
28 31 46	SMOKE DETECTION SENSORS

SHEET KEYNOTES

teamhawai'i
halepilihonua

TEAM NAME: UNIVERSITY OF HAWAII (TEAM HAWAII)
ADDRESS: UNIVERSITY OF HAWAI'I AT MĀNOA
2410 CAMPUS ROAD
HONOLULU, HI 96822
CONTACT: ROCKWOOD@ARCH.HAWAII.EDU
WWW.SOLAR.HAWAII.EDU

CONSULTANTS
ARCHITECTURE:
ENGINEERS:
LANDSCAPING:
CODE CONSULTANTS:

CLIENT
U.S. DEPARTMENT OF ENERGY
SOLAR DECATHLON 2011
WWW.SOLARDECATHLON.GOV

U.S. DEPARTMENT OF ENERGY SOLAR DECATHLON

MARK	DATE	DESCRIPTION

LOT NUMBER:	306
DRAWN BY:	UNIVERSITY OF HAWAI'I
CHECKED BY:	CHECKER
COPYRIGHT:	UNIVERSITY OF HAWAI'I SCHOOL OF ARCHITECTURE

SHEET TITLE
FIRE DETECTION AND ALARM PLAN

F-101

5/8/2011 2:04:54 PM

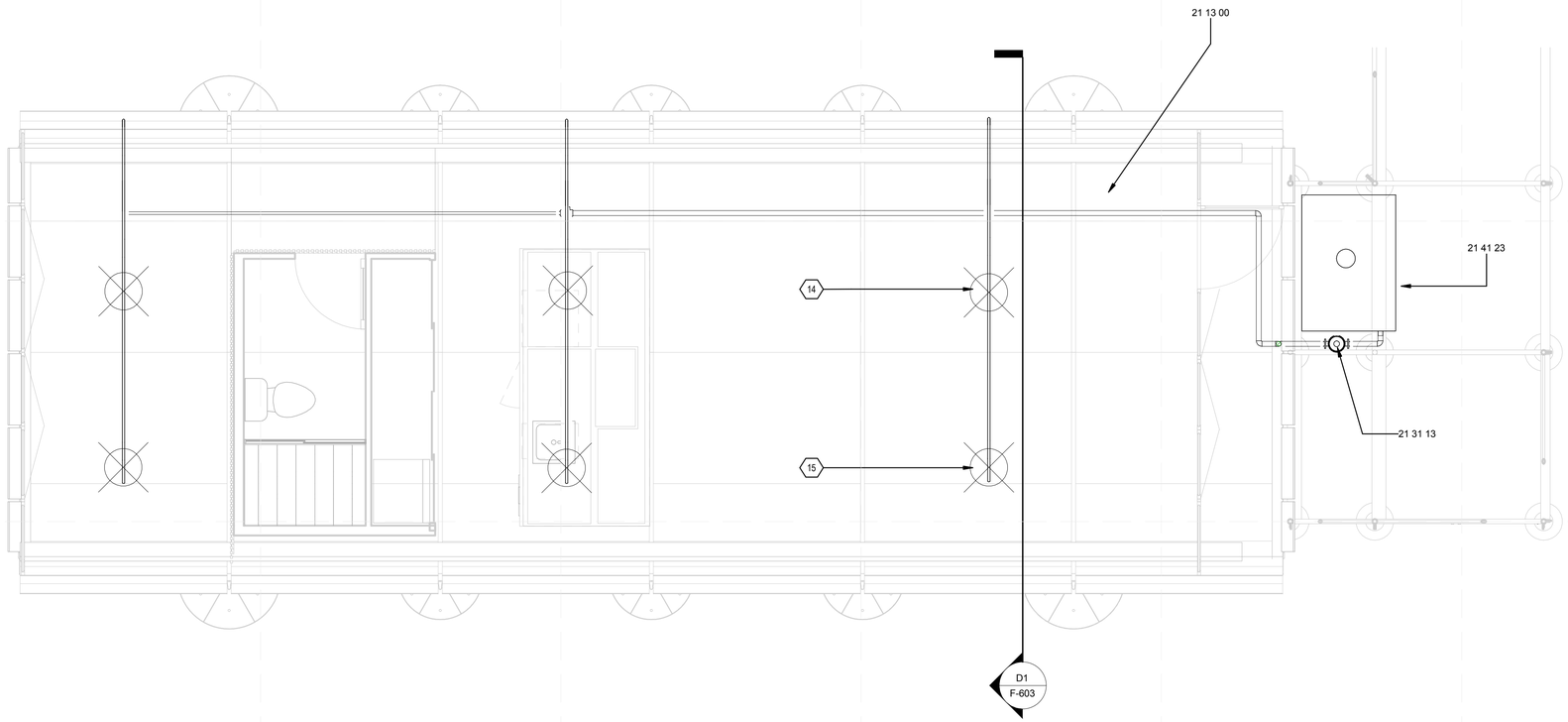

A1 FIRE SUPPRESSION PLAN
3/8" = 1'-0"

0 2' 4' 6'

5/8/2011 2:05:02 PM

GENERAL SHEET NOTES

REFERENCE KEYNOTES

21 13 00	FIRE-SUPPRESSION SPRINKLER SYSTEMS
21 31 13	ELECTRIC-DRIVE, CENTRIFUGAL FIRE PUMPS
21 41 23	GROUND SUCTION STORAGE TANKS FOR FIRE-SUPPRESSION WATER

SHEET KEYNOTES

14	DUAL CONNECTION CONCEALED SPRINKLER HEAD
15	SINGLE CONNECTION CONCEALED SPRINKLER HEAD

teamhawai'i

halepilihonua

TEAM NAME: UNIVERSITY OF HAWAII (TEAM HAWAII)

ADDRESS: UNIVERSITY OF HAWAI'I AT MĀNOA
2410 CAMPUS ROAD
HONOLULU, HI 96822

CONTACT: ROCKWOOD@ARCH.HAWAII.EDU
WWW.SOLAR.HAWAII.EDU

CONSULTANTS

ARCHITECTURE:

ENGINEERS:

LANDSCAPING:

CODE CONSULTANTS:

CLIENT

U.S. DEPARTMENT OF ENERGY

SOLAR DECATHLON 2011

WWW.SOLARDECATHLON.GOV

U.S. DEPARTMENT OF ENERGY SOLAR DECATHLON

MARK	DATE	DESCRIPTION

LOT NUMBER:	306
DRAWN BY:	UNIVERSITY OF HAWAI'I
CHECKED BY:	CHECKER
COPYRIGHT:	UNIVERSITY OF HAWAI'I SCHOOL OF ARCHITECTURE

SHEET TITLE

FIRE SUPPRESSION PLAN

F-102

FIRE PROTECTION EQUIPMENT SCHEDULE

DESCRIPTION	MANUFACTURER	MODEL	MAX FLOW RATE GPM	POWER HP	CURRENT AMPS	RATED VOLTAGE			DIMENSIONS INCH
						V	HZ	PH	
FIRE WATER PUMP	GRUNDFOS	CR 5-8	45	3	19.0	120	60	1	33 H X 8-5/8 D
FIRE SPRINKLER HEADS (6 CT)	TYCO	LFII TY2234	13 [EA]	—	—	—	—	—	3-5/16 D [3/4 CONNECTION]
FIRE EXTINGUISHER	FIRST ALERT	FE3A40GR	—	—	—	—	—	—	4.6 D x 16.0 H

FIRE PROTECTION PIPING SCHEDULE

DESCRIPTION	MATERIAL	SIZE DIAMETER INCH	LENGTH	INSULATION
FIRE SUPPRESSION SHELL BRANCH SUPPLIES	PEX PIPE	1	~60 FEET	NONE
FIRE SUPPRESSION MAIN LINE AND PUMP CONNECTION	COPPER TYPE K	1-1/4	~50 FEET	NONE

FIRE PROTECTION VALVE SCHEDULE

FAMILY	TYPE	CONNECTION SIZE DIAMETER INCH	COUNT
FIRE SUPPRESSION SUPPLY	CHECK VALVE	1-1/4	1
FIRE SUPPRESSION SUPPLY	GATE VALVE	1-1/4	2

FIRE PROTECTION FITTING SCHEDULE

FAMILY	TYPE	MATERIAL	CONNECTION SIZES DIAMETER INCH	COUNT
FIRE SUPPRESSION SUPPLY	REDUCING TEE	EP	1-1/4 X 1 X 3/4	4
FIRE SUPPRESSION SUPPLY	COUPLING	EP	1 X 3/4	2
FIRE SUPPRESSION SUPPLY	ELBOW	EP	1-1/4 X 1-1/4	4
FIRE SUPPRESSION SUPPLY	TEE	EP	1-1/4 X 1-1/4 X 1-1/4	6
FIRE SUPPRESSION PUMP CONNECTION	ELBOW	COPPER TYPE K	1-1/4 X 1-1/4	1

FIRE PROTECTION TANK SCHEDULE

DESCRIPTION	MATERIAL	DIMENSIONS INCH	VOLUME GALLONS
FIRE SUPPRESSION WATER STORAGE TANK	MEDIUM-DENSITY POLYETHYLENE	40 W X 58 L X 29 H	300

teamhawai'i

halepilihonua

TEAM NAME: UNIVERSITY OF HAWAII (TEAM HAWAII)

ADDRESS: UNIVERSITY OF HAWAI'I AT MĀNOA
2410 CAMPUS ROAD
HONOLULU, HI 96822

CONTACT: ROCKWOOD@ARCH.HAWAII.EDU
WWW.SOLAR.HAWAII.EDU

CONSULTANTS

ARCHITECTURE:

ENGINEERS:

LANDSCAPING:

CODE CONSULTANTS:

CLIENT

U.S. DEPARTMENT OF ENERGY

SOLAR DECATHLON 2011

WWW.SOLARDECATHLON.GOV

U.S. DEPARTMENT OF ENERGY SOLAR DECATHLON

MARK	DATE	DESCRIPTION

LOT NUMBER: 306

DRAWN BY: UNIVERSITY OF HAWAI'I

CHECKED BY: CHECKER

COPYRIGHT: UNIVERSITY OF HAWAI'I SCHOOL OF ARCHITECTURE

SHEET TITLE

FIRE PROTECTION SCHEDULES

F-601

5/9/2011 2:05:05 PM

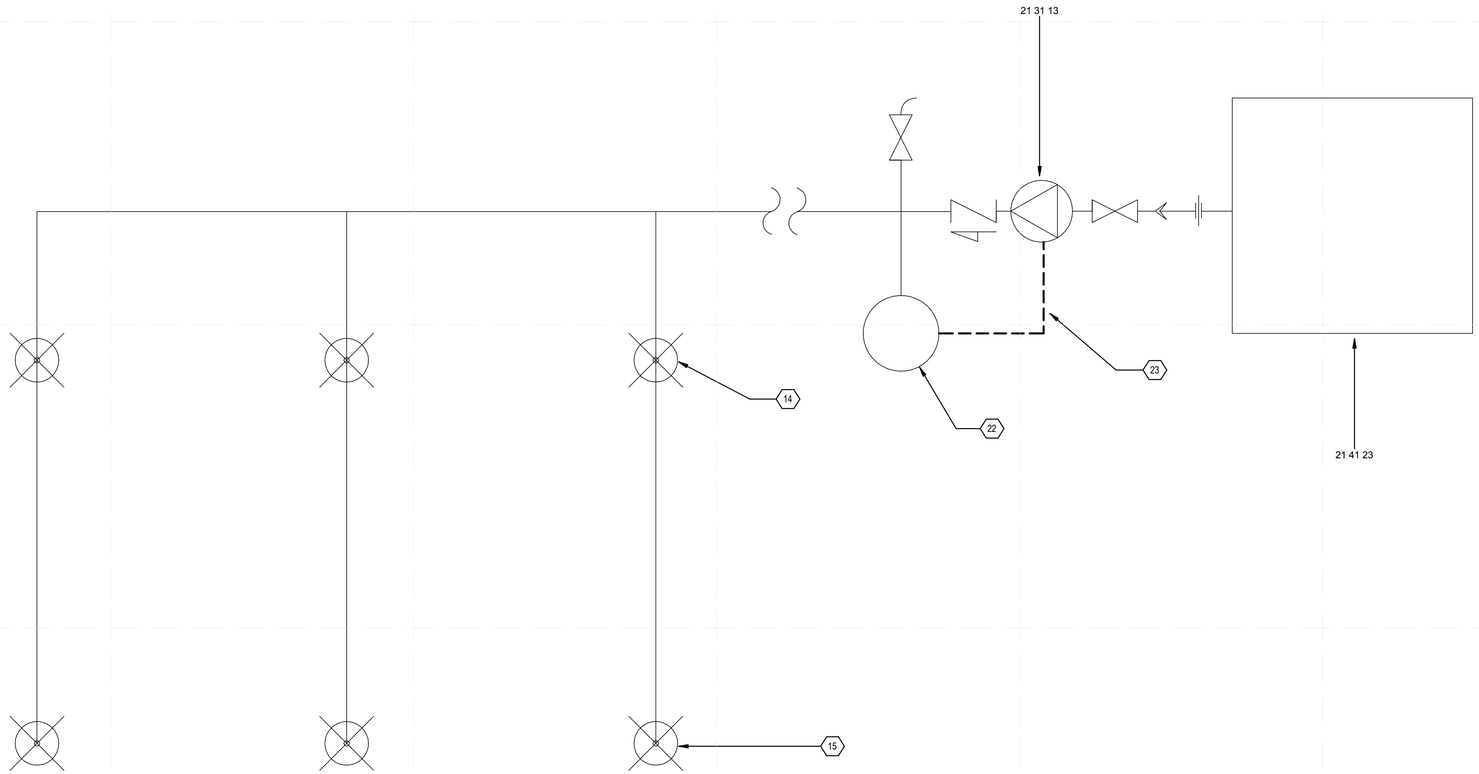

A1 FIRE SUPPRESSION DIAGRAM
NTS

GENERAL SHEET NOTES

REFERENCE KEYNOTES

21 31 13	ELECTRIC-DRIVE, CENTRIFUGAL FIRE PUMPS
21 41 23	GROUND SUCTION STORAGE TANKS FOR FIRE-SUPPRESSION WATER

SHEET KEYNOTES

14	DUAL CONNECTION CONCEALED SPRINKLER HEAD
15	SINGLE CONNECTION CONCEALED SPRINKLER HEAD
22	DIAPHRAGM PRESSURE TANK
23	SENSOR WIRE FOR PUMP TO DIAPHRAGM TANK

teamhawai'i
halepilihonua

TEAM NAME: UNIVERSITY OF HAWAII (TEAM HAWAII)
ADDRESS: UNIVERSITY OF HAWAI'I AT MĀNOA
2410 CAMPUS ROAD
HONOLULU, HI 96822
CONTACT: ROCKWOOD@ARCH.HAWAII.EDU
WWW.SOLAR.HAWAII.EDU

CONSULTANTS
ARCHITECTURE:
ENGINEERS:
LANDSCAPING:
CODE CONSULTANTS:

CLIENT
U.S. DEPARTMENT OF ENERGY
SOLAR DECATHLON 2011
WWW.SOLARDECATHLON.GOV

U.S. DEPARTMENT OF ENERGY SOLAR DECATHLON

MARK	DATE	DESCRIPTION

LOT NUMBER:	306
DRAWN BY:	UNIVERSITY OF HAWAI'I
CHECKED BY:	CHECKER
COPYRIGHT:	UNIVERSITY OF HAWAI'I SCHOOL OF ARCHITECTURE

SHEET TITLE
FIRE PROTECTION DIAGRAMS

F-602

5/8/2011 2:05:09 PM

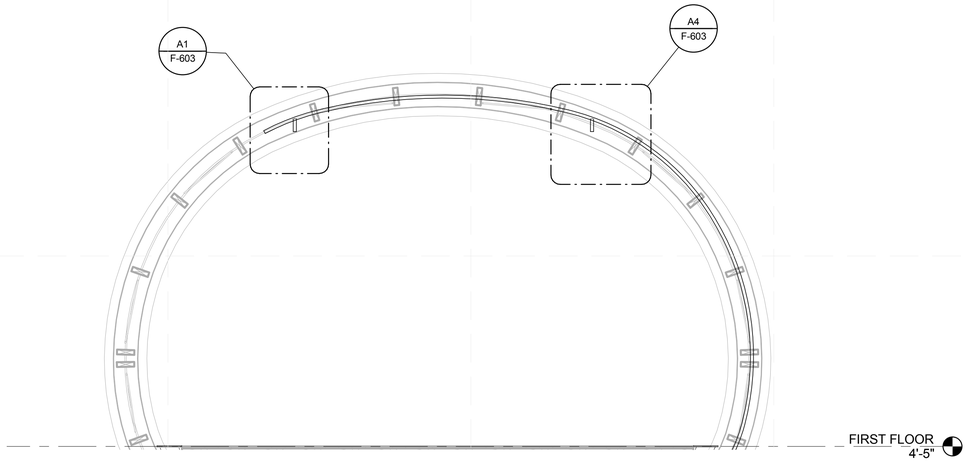

D1 FIRE SPRINKLER SECTION DETAIL
1/2" = 1'-0"

0 1' 2' 4'

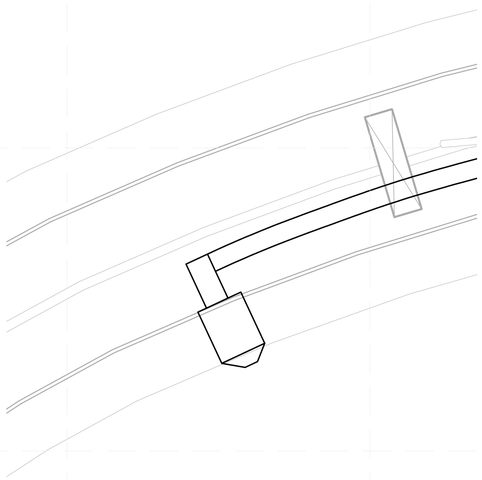

A1 SINGLE CONNECTION FIRE SPRINKLER DETAIL
3" = 1'-0"

0 3" 6" 1'

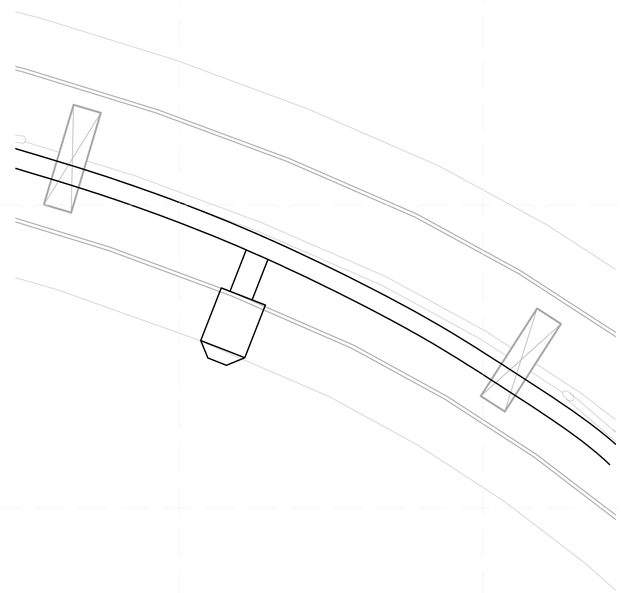

A4 DUAL CONNECTION FIRE SPRINKLER DETAIL
3" = 1'-0"

0 3" 6" 1'

GENERAL SHEET NOTES

1. THE PLACEMENT AND FLOW RATES OF THE FIRE SPRINKLER HEADS WERE DETERMINED BASED ON THE SPECIFICATIONS FROM TYCO.
2. FOR SLOPED CEILING GREATER THAN 4-INCH RISE UP TO MAXIMUM 8-INCH RISE FOR 12-INCH RUN.
3. THESE HEADS ARE CAPABLE OF MAXIMUM COVERAGE AREA OF 18 X 18 (FEET), WITH A 19 GPM MINIMUM FLOW RATE.

REFERENCE KEYNOTES

SHEET KEYNOTES

teamhawai'i

halepilihonua

TEAM NAME: UNIVERSITY OF HAWAII (TEAM HAWAII)
ADDRESS: UNIVERSITY OF HAWAI'I AT MĀNOA
2410 CAMPUS ROAD
HONOLULU, HI 96822
CONTACT: ROCKWOOD@ARCH.HAWAII.EDU
WWW.SOLAR.HAWAII.EDU

CONSULTANTS

ARCHITECTURE:

ENGINEERS:

LANDSCAPING:

CODE CONSULTANTS:

CLIENT

U.S. DEPARTMENT OF ENERGY
SOLAR DECATHLON 2011
WWW.SOLARDECATHLON.GOV

U.S. DEPARTMENT OF ENERGY SOLAR DECATHLON

MARK	DATE	DESCRIPTION

LOT NUMBER:	306
DRAWN BY:	UNIVERSITY OF HAWAI'I
CHECKED BY:	Checker
COPYRIGHT:	UNIVERSITY OF HAWAI'I SCHOOL OF ARCHITECTURE

SHEET TITLE

FIRE SPRINKLER DETAIL

F-603

5/8/2011 2:05:22 PM

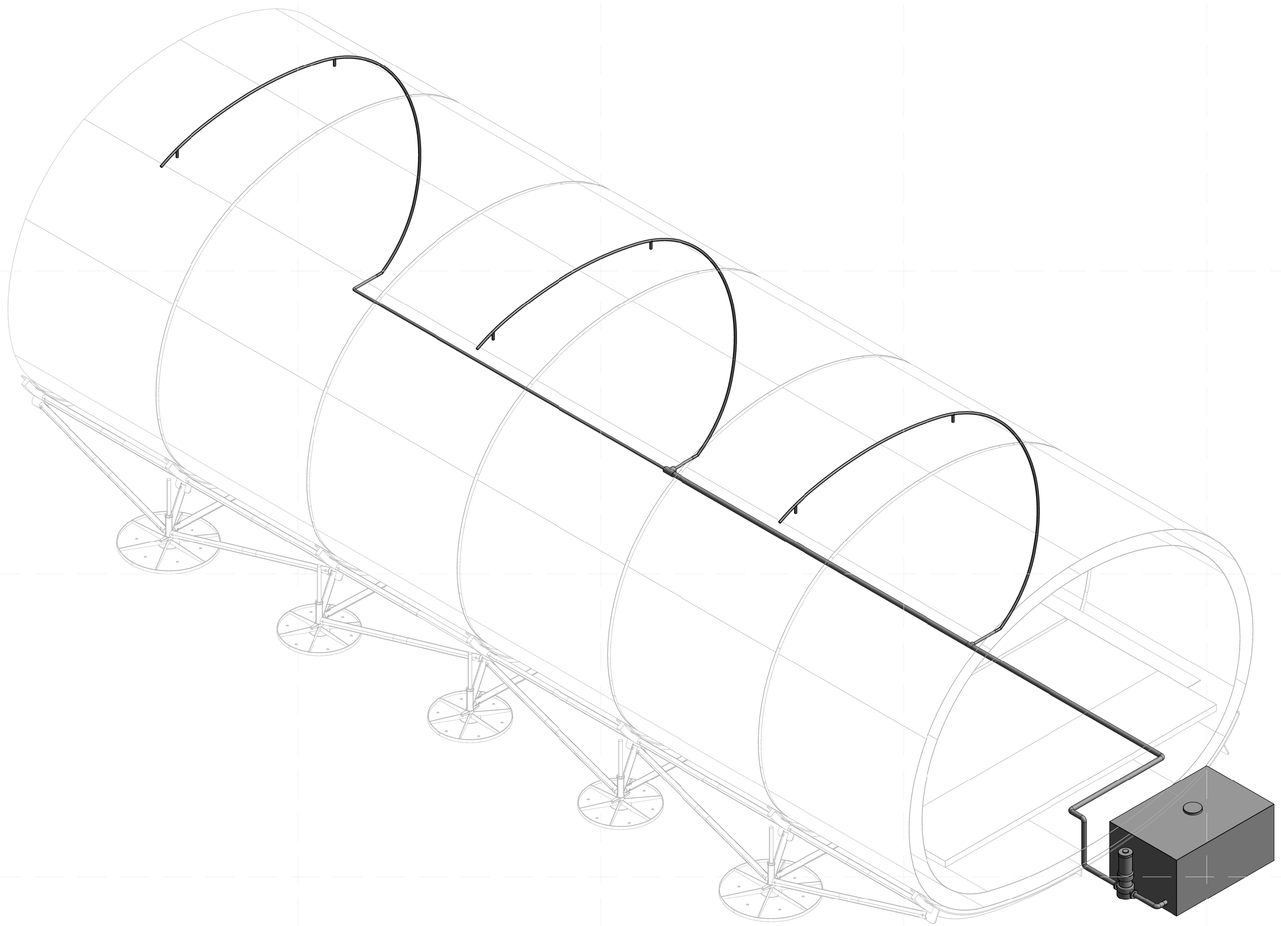

A1 FIRE SUPPRESSION ISOMETRIC

0 2' 4' 6'

5/8/2011 2:08:10 PM

teamhawai'i

halepilihonua

TEAM NAME:	UNIVERSITY OF HAWAII (TEAM HAWAII)
ADDRESS:	UNIVERSITY OF HAWAI'I AT MĀNOA 2410 CAMPUS ROAD HONOLULU, HI 96822
CONTACT:	ROCKWOOD@ARCH.HAWAII.EDU WWW.SOLAR.HAWAII.EDU

CONSULTANTS

ARCHITECTURE:

ENGINEERS:

LANDSCAPING:

CODE CONSULTANTS:

CLIENT

U.S. DEPARTMENT OF ENERGY

SOLAR DECATHLON 2011

WWW.SOLARDECATHLON.GOV

U.S. DEPARTMENT OF ENERGY SOLAR DECATHLON

MARK	DATE	DESCRIPTION

LOT NUMBER:	306
DRAWN BY:	UNIVERSITY OF HAWAI'I
CHECKED BY:	CHECKER
COPYRIGHT:	UNIVERSITY OF HAWAI'I SCHOOL OF ARCHITECTURE

SHEET TITLE

FIRE SUPPRESSION ISOMETRICS

F-901

PLUMBING NOTES

1. PLUMBING SYSTEMS WERE DESIGNED FOLLOWING INTERNATIONAL RESIDENTIAL CODE, INTERNATIONAL PLUMBING CODE, AND UNIFORM PLUMBING CODE.
2. DOMESTIC HOT AND COLD WATER LINES WILL BE PEX PIPING IN ORDER TO ALLOW FOR EASE OF INSTALLATION. HORIZONTAL PEX PIPES WILL BE SUPPORTED FOR EVERY 2.5 FT, COMPLYING TO 2.67 FT REQUIREMENT FROM IRC2009 TABLE P2605.1 - PIPING SUPPORT. HOT WATER SUPPLY LINE WILL BE USED INSULATED PEX PIPE TO MINIMIZE THE HEAT LOSS. PRESSURE FOR THE DOMESTIC WATER SUPPLY WILL BE PROVIDED BY A 1 HP CENTRIFUGAL PUMP, AND WILL BE CONNECTED TO THE 500 GALLON FRESH WATER TANK.
3. SANITARY WASTE AND VENT LINES WILL BE PVC PIPING. THE FIXTURE SANITARY DRAINS ARE GREATER OR EQUAL THAN 1-1/4" TO COMPLY WITH IRC2009 P2703.1, AND WILL DRAIN INTO 2" BRANCH LINES LEADING TO THE MAIN 2" RETURN LINE TO SANITARY WASTE TANK. THE CLOTHES WASHING MACHINE WILL DRAIN INTO AN 18 INCH HIGH STAND PIPE TO COMPLY WITH IRC2009 P2706.2 - STANDPIPES. THE CLOTHES WASHING MACHINE DISCHARGE WILL BE THROUGH AN AIR BREAK TO COMPLY WITH IRC2009 P2718.1 - WASTE CONNECTION. THE DRAINAGE FIXTURE UNIT VALUE (D.F.U.) IN OUR HOUSE IS 7, AND ACCORDING TO UNIFORM PLUMBING CODE, 2 INCH GRAY WATER PIPES CAN BE USED. AIR ADMITTANCE VALVES ARE USED FOR LOW FLOW RATE FIXTURES (LESS THAN 18GPM), AND COMPLY WITH IRC2009 SECTION P3114.

PLUMBING LEGEND

SYMBOL	ABBRV.	DESCRIPTION
	AAV	AIR ADMITTANCE VALVE
	BV	BALL VALVE
	CV	CHECK VALVE
	CO	CLEANOUT
	FXC	FIXTURE CONNECTION
	FXD	FIXTURE DRAIN
	FLD	FLOOR DRAIN
	FLP	FLOOR PENETRATION
	GV	GATE VALVE
	P	PUMP
	SHR	SHOWER
	TRP	TRAP
	VTR	VENT ROOF

teamhawai'i

halepilihonua

TEAM NAME: UNIVERSITY OF HAWAII (TEAM HAWAII)

ADDRESS: UNIVERSITY OF HAWAI'I AT MĀNOA
2410 CAMPUS ROAD
HONOLULU, HI 96822

CONTACT: ROCKWOOD@ARCH.HAWAII.EDU
WWW.SOLAR.HAWAII.EDU

CONSULTANTS

ARCHITECTURE:

ENGINEERS:

LANDSCAPING:

CODE CONSULTANTS:

CLIENT

U.S. DEPARTMENT OF ENERGY

SOLAR DECATHLON 2011

WWW.SOLARDECATHLON.GOV

U.S. DEPARTMENT OF ENERGY SOLAR DECATHLON

MARK	DATE	DESCRIPTION

LOT NUMBER: 306

DRAWN BY: UNIVERSITY OF HAWAI'I

CHECKED BY: CHECKER

COPYRIGHT: UNIVERSITY OF HAWAI'I
SCHOOL OF ARCHITECTURE

SHEET TITLE

PLUMBING SYMBOLS AND NOTES

P-001

5/8/2011 5:22:26 PM

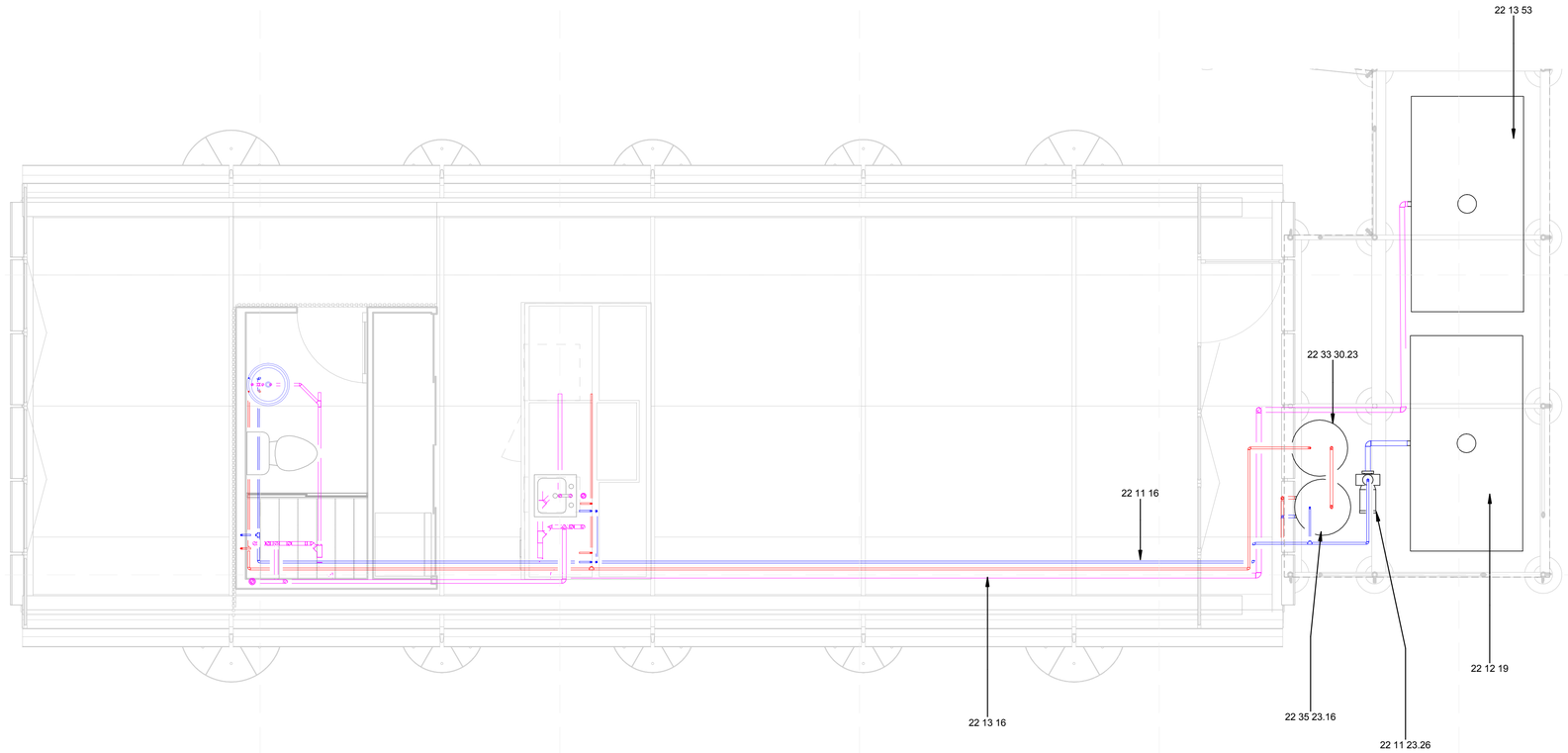

A1 PLUMBING SITE PLAN
3/8" = 1'-0"

0 2' 4' 6'

5/6/2011 5:22:36 PM

GENERAL SHEET NOTES

1. WC WILL NOT BE CONNECTED TO WATER SUPPLY AND SANITARY LINES DURING COMPETITION.

REFERENCE KEYNOTES

22 11 16	DOMESTIC WATER PIPING
22 11 23.26	CLOSE-COUPLED, HORIZONTALLY MOUNTED, IN-LINE CENTRIFUGAL DOMESTIC-WATER PUMPS
22 12 19	FACILITY GROUND-MOUNTED, POTABLE WATER STORAGE TANKS
22 13 16	SANITARY WASTE AND VENT PIPING
22 13 53	FACILITY SEPTIC TANKS
22 33 30.23	RESIDENTIAL, COLLECTOR-TO-TANK, SOLAR-ELECTRIC DOMESTIC WATER HEATERS
22 35 23.16	CIRCULATING, STORAGE DOMESTIC WATER HEAT EXCHANGERS

SHEET KEYNOTES

teamhawai'i

halepilihonua

TEAM NAME: UNIVERSITY OF HAWAII (TEAM HAWAII)

ADDRESS: UNIVERSITY OF HAWAI'I AT MĀNOA
2410 CAMPUS ROAD
HONOLULU, HI 96822

CONTACT: ROCKWOOD@ARCH.HAWAII.EDU
WWW.SOLAR.HAWAII.EDU

CONSULTANTS

ARCHITECTURE:

ENGINEERS:

LANDSCAPING:

CODE CONSULTANTS:

CLIENT

U.S. DEPARTMENT OF ENERGY
SOLAR DECATHLON 2011
WWW.SOLARDECATHLON.GOV

U.S. DEPARTMENT OF ENERGY SOLAR DECATHLON

MARK	DATE	DESCRIPTION

LOT NUMBER:	306
DRAWN BY:	UNIVERSITY OF HAWAI'I
CHECKED BY:	CHECKER
COPYRIGHT:	UNIVERSITY OF HAWAI'I SCHOOL OF ARCHITECTURE

SHEET TITLE

PLUMBING SITE PLAN

P-101

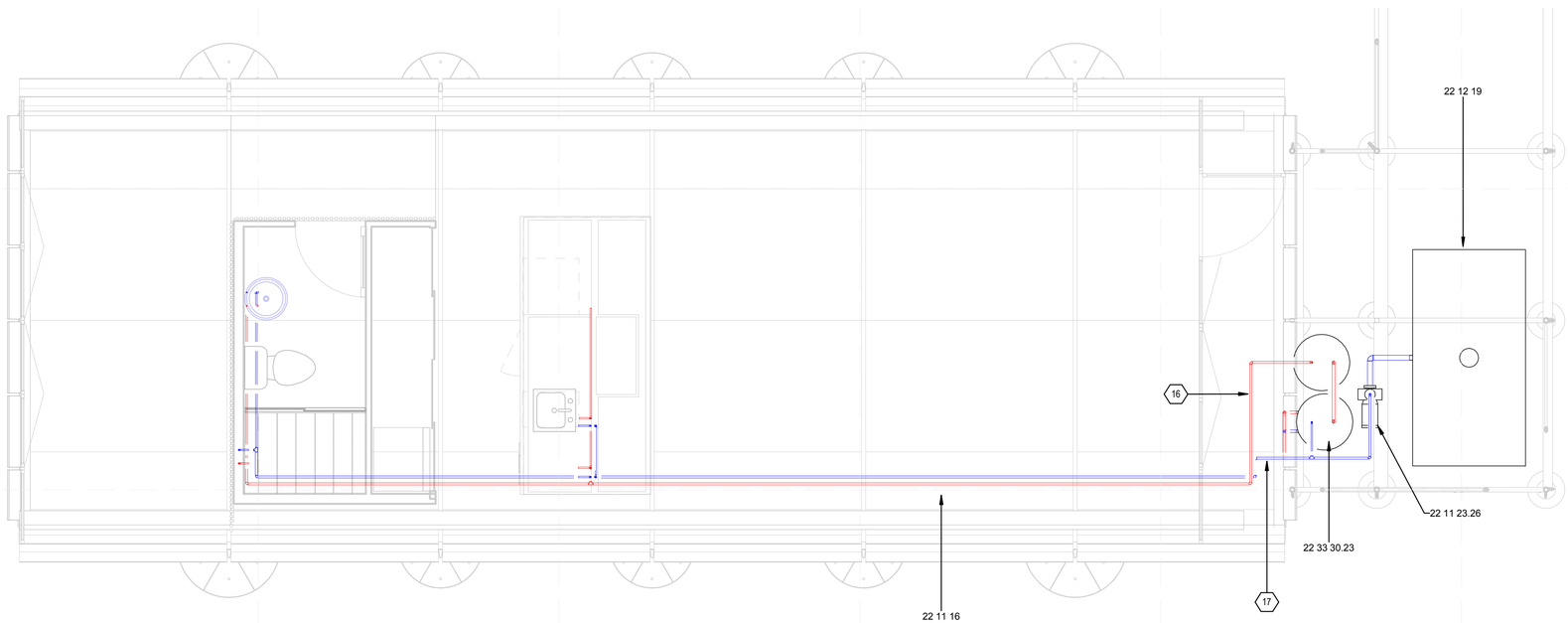

A1 DOMESTIC SUPPLY PLAN
3/8" = 1'-0"

0 2' 4' 6'

5/8/2011 5:22:44 PM

GENERAL SHEET NOTES

1. WC WILL NOT BE CONNECTED TO WATER SUPPLY AND SANITARY LINES DURING COMPETITION.

REFERENCE KEYNOTES

22 11 16	DOMESTIC WATER PIPING
22 11 23.26	CLOSE-COUPLED, HORIZONTALLY MOUNTED, IN-LINE CENTRIFUGAL DOMESTIC-WATER PUMPS
22 12 19	FACILITY GROUND-MOUNTED, POTABLE WATER STORAGE TANKS
22 33 30.23	RESIDENTIAL, COLLECTOR-TO-TANK, SOLAR-ELECTRIC DOMESTIC WATER HEATERS

SHEET KEYNOTES

16	PEX INSULATED HOT WATER LINE
17	PEX COLD WATER LINE

teamhawai'i

halepilihonua

TEAM NAME: UNIVERSITY OF HAWAII (TEAM HAWAII)

ADDRESS: UNIVERSITY OF HAWAI'I AT MĀNOA
2410 CAMPUS ROAD
HONOLULU, HI 96822

CONTACT: ROCKWOOD@ARCH.HAWAII.EDU
WWW.SOLAR.HAWAII.EDU

CONSULTANTS

ARCHITECTURE:

ENGINEERS:

LANDSCAPING:

CODE CONSULTANTS:

CLIENT

U.S. DEPARTMENT OF ENERGY
SOLAR DECATHLON 2011
WWW.SOLARDECATHLON.GOV

U.S. DEPARTMENT OF ENERGY SOLAR DECATHLON

MARK	DATE	DESCRIPTION

LOT NUMBER:	306
DRAWN BY:	UNIVERSITY OF HAWAI'I
CHECKED BY:	CHECKER
COPYRIGHT:	UNIVERSITY OF HAWAI'I SCHOOL OF ARCHITECTURE

SHEET TITLE

DOMESTIC SUPPLY PLAN

P-102

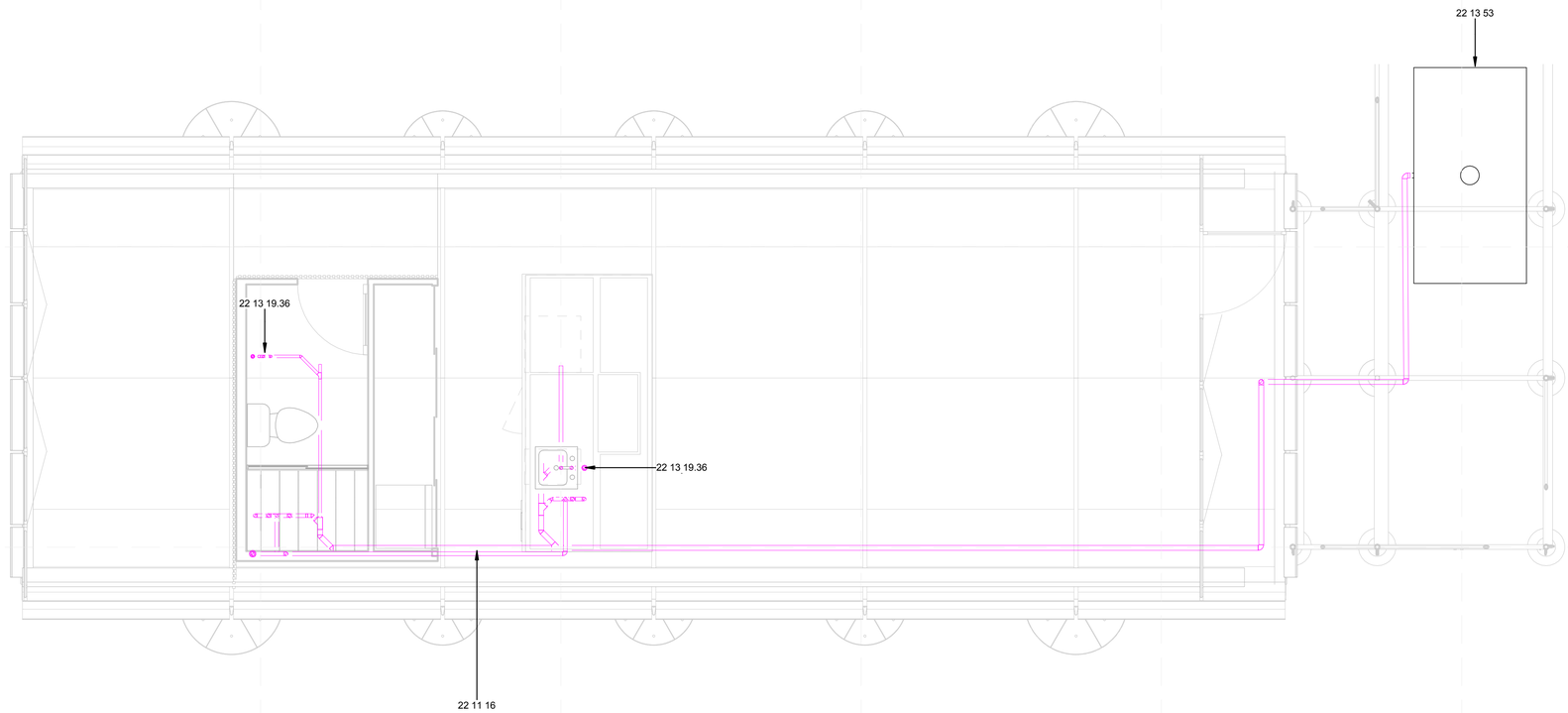

A1 SANITARY WASTE AND VENT PLAN
3/8" = 1'-0"

0 2' 4' 6'

GENERAL SHEET NOTES

1. WC WILL NOT BE CONNECTED TO WATER SUPPLY AND SANITARY LINES DURING COMPETITION.

REFERENCE KEYNOTES

22 11 16	DOMESTIC WATER PIPING
22 13 19.36	AIR-ADMITTANCE VALVES
22 13 53	FACILITY SEPTIC TANKS

SHEET KEYNOTES

teamhawai'i
halepilihonua

TEAM NAME: UNIVERSITY OF HAWAII (TEAM HAWAII)
ADDRESS: UNIVERSITY OF HAWAI'I AT MĀNOA
2410 CAMPUS ROAD
HONOLULU, HI 96822
CONTACT: ROCKWOOD@ARCH.HAWAII.EDU
WWW.SOLAR.HAWAII.EDU

CONSULTANTS
ARCHITECTURE:
ENGINEERS:
LANDSCAPING:
CODE CONSULTANTS:

CLIENT
U.S. DEPARTMENT OF ENERGY
SOLAR DECATHLON 2011
WWW.SOLARDECATHLON.GOV

U.S. DEPARTMENT OF ENERGY SOLAR DECATHLON

MARK	DATE	DESCRIPTION

LOT NUMBER:	306
DRAWN BY:	UNIVERSITY OF HAWAI'I
CHECKED BY:	CHECKER
COPYRIGHT:	UNIVERSITY OF HAWAI'I SCHOOL OF ARCHITECTURE

SHEET TITLE
DOMESTIC SANITARY RETURN PLAN

P-103

5/8/2011 5:22:52 PM

PLUMBING EQUIPMENT SCHEDULE

DESCRIPTION	MANUFACTURER	MODEL	MAX FLOW RATE GPM	POWER HP	CURRENT AMPS	RATED VOLTAGE			DIMENSIONS INCH
						V	HZ	PH	
FRESH WATER PUMP	GRUNDFOS	MQ 3-45	19	1	10.0	120	60	1	12.74H X 22.44L X 8.58W
SOLAR RECIRCULATING PUMP	GRUNDFOS	UP15-18 BUC 7	16	1/25	0.74	120	60	1	5-1/4 H X 7-3/4 L X 3-3/4 W
SOLAR STORAGE TANK W/ BACKUP HEAING	BRADFORD WHITE	M-1-40L6DS**	—	—	16.0	240	60	1	31-1/4 H X 22 D [40 GAL]
SOLAR THERMAL SYSTEM CONTROLLER	DELTA-T CONTROLS HELIODYNE INC.	DLTA 000-002	—	—	4.45	120	60	1	

PLUMBING PIPING SCHEDULE

DESCRIPTION	MATERIAL	SIZE DIAMETER INCH	LENGTH	INSULATION
DOMESTIC COLD WATER	PEX PIPE	3/4 & 1/2	~60 FEET	NONE
DOMESTIC HOT WATER	PEX PIPE	3/4 & 1/2	~60 FEET	1 INCH LAYER
SANITARY RETURN	PVC	1-1/2 & 2	~50 FEET	NONE
SANITARY VENT	PVC	1-1/2 & 2	~30 FEET	NONE
SOLAR HOT WATER	COPPER TYPE K	1 & 1/2	~25 FEET	1 INCH LAYER

PLUMBING VALVE SCHEDULE

FAMILY	TYPE	CONNECTION SIZE DIAMETER INCH	COUNT
DOMESTIC COLD WATER	BALL VALVE	3/4	1
DOMESTIC COLD WATER	CHECK VALVE	3/4	1
DOMESTIC COLD WATER	GATE VALVE	3/4	2
SOLAR HOT WATER	BALL VALVE	1 & 1/2	6
SOLAR HOT WATER	CHECK VALVE	1 & 1/2	2
SOLAR HOT WATER	DRAIN	1	2
SOLAR HOT WATER	MIXING VALVE	1	1
SOLAR HOT WATER	PRESSURE RELIEF VALVE	1	1
SOLAR HOT WATER	TEMPERATURE & PRESSURE RELIEF VALVE	1	2
SANITARY VENT	AIR-ADMITTANCE VALVE	1-1/2	2

PLUMBING FIXTURES SCHEDULE

DESCRIPTION	MANUFACTURER	MODEL	COLOR/ FINISH
KITCHEN SINK	KOHLER	UNDERTONE KITCHEN SINK 3331-NA	—
KITCHEN SINK FAUCET	KOHLER	PURIST KITCHEN FAUCET 7507-CP	POLISHED CHROME
KITCHEN SINK STRAINER	KOHLER	DUO STRAINER 8801-CP	POLISHED CHROME
BATHROOM SINK	KOHLER	VOX VESSEL LAVATORY 14800-0	WHITE
BATHROOM SINK FAUCET	KOHLER	PURIST KITCHEN FAUCET 7507-CP	POLISHED CHROME
BATHROOM SINK DRAIN	KOHLER	LAVATORY DRAIN 7124-A-CP	POLISHED CHROME
SHOWER	KOHLER	PURIST LOW FLOW HANDSHOWER 978-CP	POLISHED CHROME
SHOWER DRAIN	KOHLER	SHOWER DRAIN 9135-CP	POLISHED CHROME
SHOWER VALVE	KOHLER	STACKED VALVE 680-KS-NA	—
WATER CLOSET	KOHLER	PURIST HATBOX TOILET 3492-0	WHITE

PLUMBING FITTING SCHEDULE

FAMILY	TYPE	MATERIAL	CONNECTION SIZES DIAMETER INCH	COUNT
DOMESTIC WATER	REDUCING TEE	EP	3/4 X 3/4 X 1/2	4
DOMESTIC WATER	COUPLING	EP	3/4 X 1/2	2
DOMESTIC WATER	ELBOW	EP	3/4 & 3/4	4
DOMESTIC WATER	TEE	EP	3/4 X 3/4 X 3/4	6
SANITARY WASTE AND VENT	TEE	PVC	2 X 2 X 2	1
SANITARY WASTE AND VENT	TEE	PVC	1-1/2 X 1-1/2 X 1-1/2	3
SANITARY WASTE AND VENT	TEE	PVC	2 X 1-1/2 X 2	5
SANITARY WASTE AND VENT	CLEANOUT	PVC	2	3
SANITARY WASTE AND VENT	P-TRAP	PVC/ CHROME	1-1/2	4
SOLAR HOT WATER	REDUCING TEE	COPPER	1 X 1 X 1/2	3
SOLAR HOT WATER	COUPLING	COPPER	1 X 1	10
SOLAR HOT WATER	ELBOW	COPPER	1 X 1/2	7

PLUMBING TANK SCHEDULE

DESCRIPTION	MATERIAL	DIMENSIONS INCH	VOLUME GALLONS
FRESH WATER STORAGE TANK	MEDIUM-DENSITY POLYETHYLENE	48 W X 92 L X 29 H	500
SANITARY WATER STORAGE TANK	MEDIUM-DENSITY POLYETHYLENE	48 W X 92 L X 29 H	500
SOLAR HOT WATER STORAGE TANK	STEEL CASSING W/ VITRAGLAS LINING	31-1/4 H X 22 D	40

teamhawai'i
halepilihonua

TEAM NAME: UNIVERSITY OF HAWAII (TEAM HAWAII)
ADDRESS: UNIVERSITY OF HAWAI'I AT MĀNOA
2410 CAMPUS ROAD
HONOLULU, HI 96822
CONTACT: ROCKWOOD@ARCH.HAWAII.EDU
WWW.SOLAR.HAWAII.EDU

CONSULTANTS
ARCHITECTURE:
ENGINEERS:
LANDSCAPING:
CODE CONSULTANTS:

CLIENT
U.S. DEPARTMENT OF ENERGY
SOLAR DECATHLON 2011
WWW.SOLARDECATHLON.GOV

U.S. DEPARTMENT OF ENERGY SOLAR DECATHLON

MARK	DATE	DESCRIPTION

LOT NUMBER: 306
DRAWN BY: UNIVERSITY OF HAWAI'I
CHECKED BY: CHECKER

COPYRIGHT: UNIVERSITY OF HAWAI'I SCHOOL OF ARCHITECTURE

SHEET TITLE
PLUMBING SCHEDULES

P-601

5/8/2011 5:22:55 PM

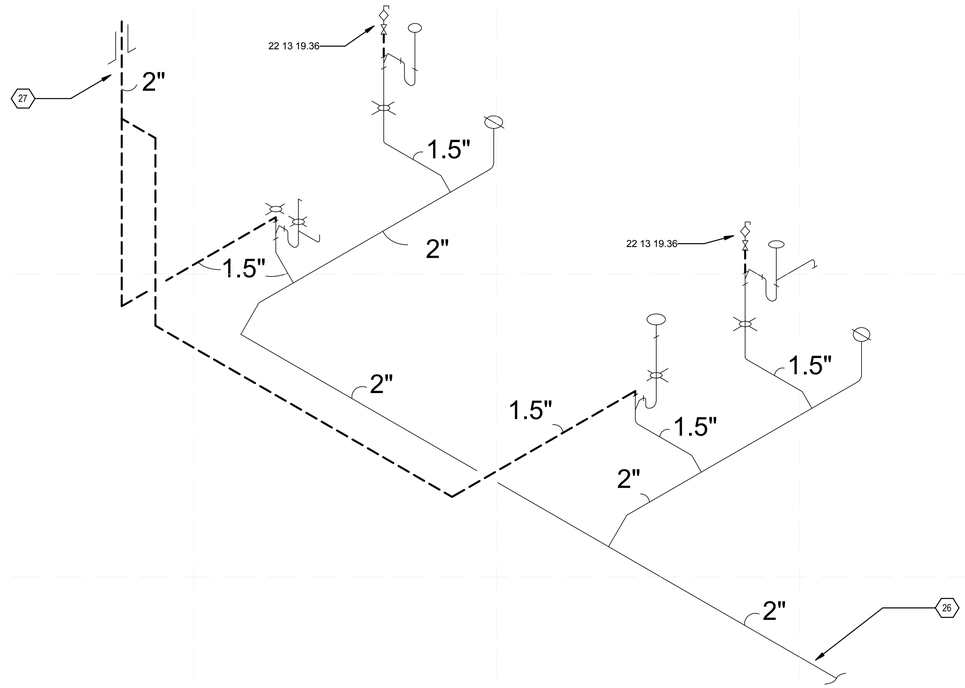

C4 SANITARY WASTE & VENT DIAGRAM
NTS

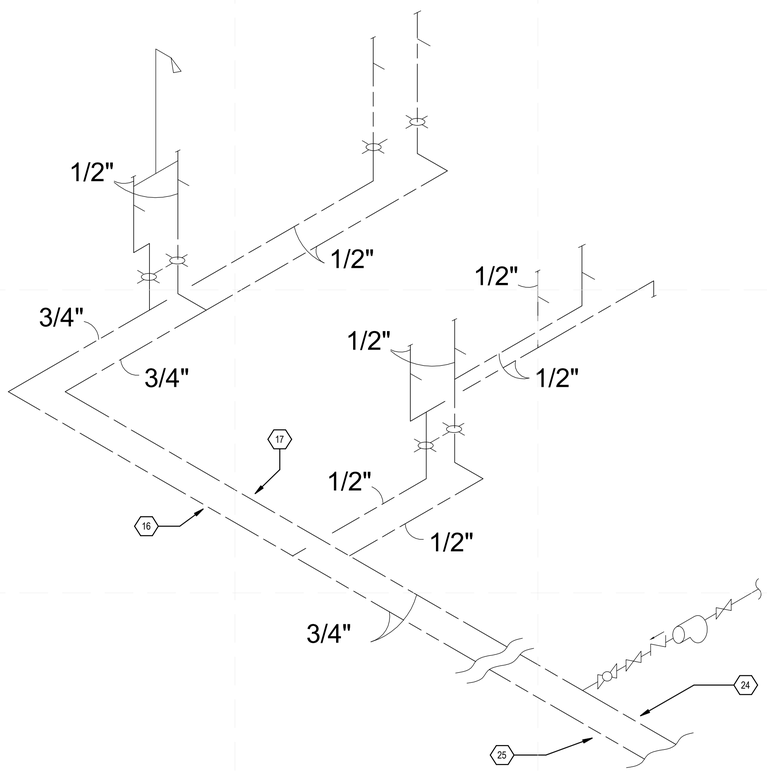

A1 DOMESTIC SUPPLY DIAGRAM
NTS

GENERAL SHEET NOTES

REFERENCE KEYNOTES

22 13 19.36	AIR-ADMITTANCE VALVES

SHEET KEYNOTES

16	PEX INSULATED HOT WATER LINE
17	PEX COLD WATER LINE
24	COLD WATER SUPPLY TO SOLAR WATER SYSTEM
25	HOT WATER SUPPLY FROM SOLAR WATER SYSTEM
26	SANITARY WATER RETURN TO SANITARY WATER TANK
27	SANITARY VENTING TO ROOF

teamhawai'i
halepilihonua

TEAM NAME: UNIVERSITY OF HAWAII (TEAM HAWAII)
ADDRESS: UNIVERSITY OF HAWAI'I AT MĀNOA
2410 CAMPUS ROAD
HONOLULU, HI 96822
CONTACT: ROCKWOOD@ARCH.HAWAII.EDU
WWW.SOLAR.HAWAII.EDU

CONSULTANTS
ARCHITECTURE:
ENGINEERS:
LANDSCAPING:
CODE CONSULTANTS:

CLIENT
U.S. DEPARTMENT OF ENERGY
SOLAR DECATHLON 2011
WWW.SOLARDECATHLON.GOV

U.S. DEPARTMENT OF ENERGY SOLAR DECATHLON

MARK	DATE	DESCRIPTION

LOT NUMBER:	306
DRAWN BY:	UNIVERSITY OF HAWAI'I
CHECKED BY:	Checker
COPYRIGHT:	UNIVERSITY OF HAWAI'I SCHOOL OF ARCHITECTURE

SHEET TITLE
PLUMBING DIAGRAMS

P-602

5/8/2011 5:23:00 PM

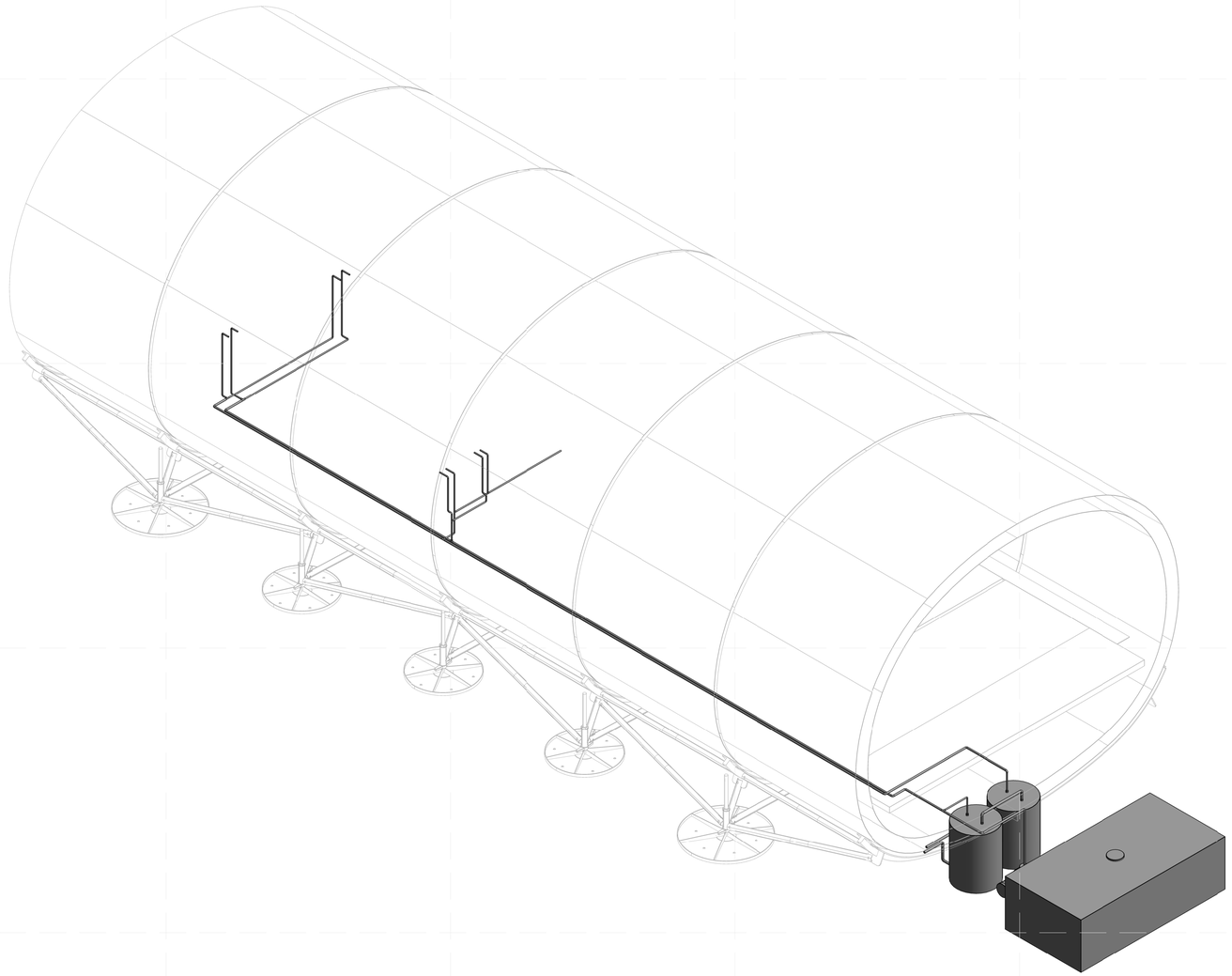

A1 DOMESTIC SUPPLY ISOMETRIC

5/9/2011 5:25:47 PM

teamhawai'i

halepilihonua

TEAM NAME: UNIVERSITY OF HAWAII (TEAM HAWAII)

ADDRESS: UNIVERSITY OF HAWAI'I AT MĀNOA
2410 CAMPUS ROAD
HONOLULU, HI 96822

CONTACT: ROCKWOOD@ARCH.HAWAII.EDU
WWW.SOLAR.HAWAII.EDU

CONSULTANTS

ARCHITECTURE:

ENGINEERS:

LANDSCAPING:

CODE CONSULTANTS:

CLIENT

U.S. DEPARTMENT OF ENERGY

SOLAR DECATHLON 2011

WWW.SOLARDECATHLON.GOV

U.S. DEPARTMENT OF ENERGY SOLAR DECATHLON

MARK	DATE	DESCRIPTION

LOT NUMBER: 306

DRAWN BY: UNIVERSITY OF HAWAI'I

CHECKED BY: CHECKER

COPYRIGHT: UNIVERSITY OF HAWAI'I SCHOOL OF ARCHITECTURE

SHEET TITLE

DOMESTIC SUPPLY ISOMETRICS

P-901

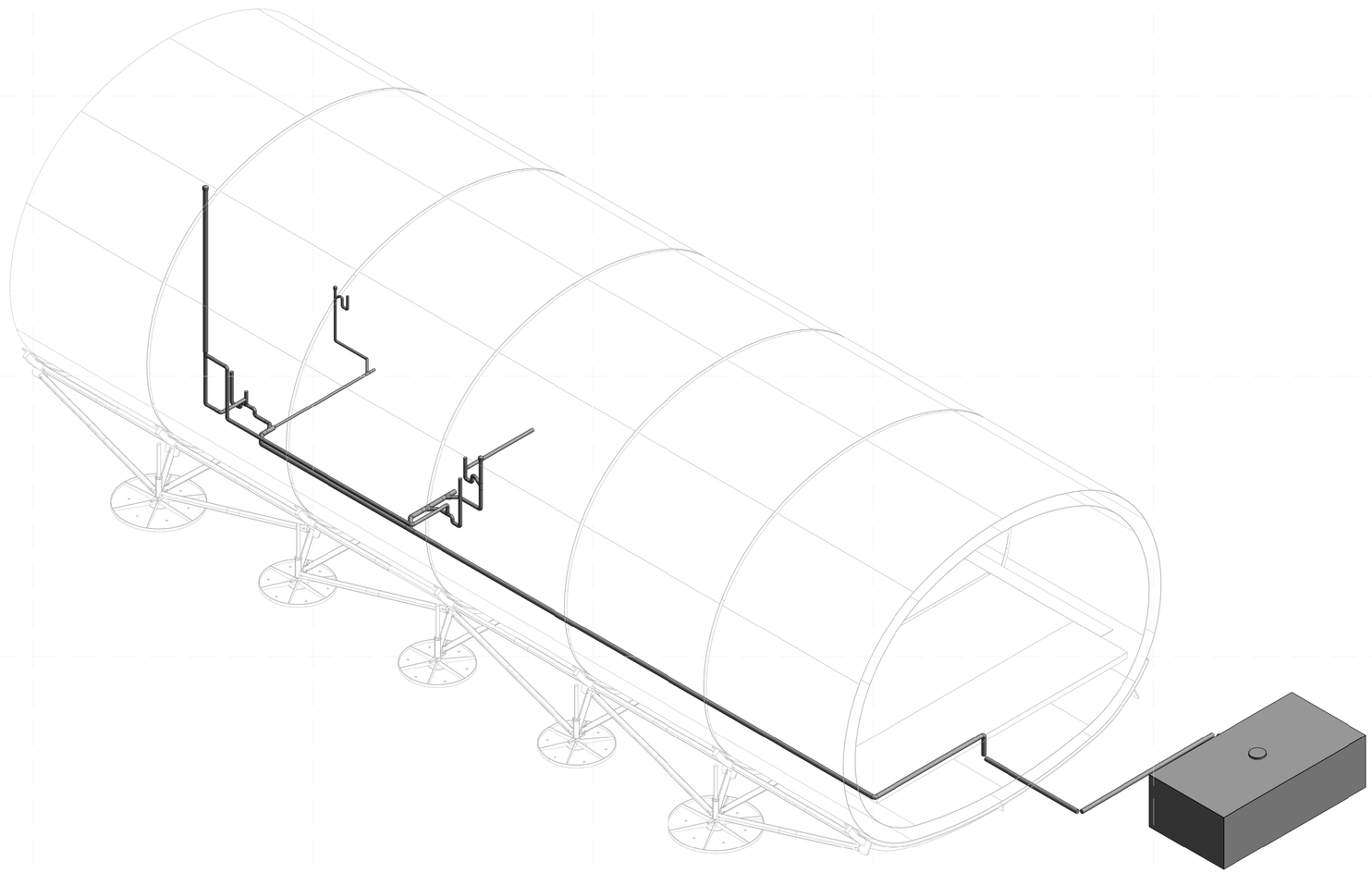

A1 SANITARY WASTE AND VENT ISOMETRIC

5/8/2011 5:28:35 PM

teamhawai'i

halepilihonua

TEAM NAME: UNIVERSITY OF HAWAII (TEAM HAWAII)

ADDRESS: UNIVERSITY OF HAWAI'I AT MĀNOA
2410 CAMPUS ROAD
HONOLULU, HI 96822

CONTACT: ROCKWOOD@ARCH.HAWAII.EDU
WWW.SOLAR.HAWAII.EDU

CONSULTANTS

ARCHITECTURE:

ENGINEERS:

LANDSCAPING:

CODE CONSULTANTS:

CLIENT

U.S. DEPARTMENT OF ENERGY

SOLAR DECATHLON 2011

WWW.SOLARDECATHLON.GOV

U.S. DEPARTMENT OF ENERGY SOLAR DECATHLON

MARK	DATE	DESCRIPTION

LOT NUMBER: 306

DRAWN BY: UNIVERSITY OF HAWAI'I

CHECKED BY: CHECKER

COPYRIGHT: UNIVERSITY OF HAWAI'I
SCHOOL OF ARCHITECTURE

SHEET TITLE

SANITARY WASTE AND VENT ISOMETRICS

P-902

MECHANICAL NOTES

1. MECHANICAL AND HVAC SYSTEMS SHALL BE INSTALLED PER MANUFACTURER'S SPECIFICATIONS AND INTERNATIONAL RESIDENTIAL CODE.
2. THE HVAC SYSTEM IMPLEMENTS A WATER-SOURCE HEAT PUMP DRAWING FROM A THERMAL MASS WHICH ACTS AS A GEOTHERMAL SOURCE. THE THERMAL MASS CONTAINS PHASE CHANGE MATERIAL WHICH WILL CREATE A LOWER AND UPPER BOUND TEMPERATURE RANGE THAT WILL OPTIMIZE THE PERFORMANCE OF THE HEAT PUMP. DURING COOLING MODE, HEAT WILL BE DUMPED INTO THERMAL MASS, WHILE DURING HEATING MODE COOLER WATER WILL BE PUMPED BACK INTO THERMAL MASS TANK. THIS BALANCE WILL HELP TO REDUCE ENERGY NEEDS AND REDUCE HEAT LOSS FROM SYSTEM.
3. THE THERMAL MASS WILL BE CONTAINED BY AN INSULATED PILLOW/BLADDER TANK. THE PILLOW TANK WILL HOLD THE PHASE CHANGE MATERIAL WHICH IS CONTAINED IN LONG TUBES. APPROXIMATELY 450 OF THESE TUBES SHALL BY PLACED INTO THE PILLOW TANK THROUGH FILL OPENING. THE TUBES WILL SELF-STACK INSIDE THE PILLOW TANK, WITH SOME ASSISTANCE. ONCE ALL PHASE CHANGE MATERIAL TUBES (TUBEICE) ARE IN PLACE, THE PILLOW TANK WILL BE FILLED WITH WATER.
4. THE PILLOW TANK WILL BE FILLED WITH WATER PUMP OUT OF THE WATER TANKS THROUGH A 1.5 INCH RUBBER HOSE. A 0.6 HP SUBMERSIBLE PUMP WILL BE USED TO PUMP THE WATER FROM THE WATER TANKS INTO THE PILLOW TANK. THIS PUMP WILL ALSO BE USED TO DRAIN THE PILLOW TANK BACK INTO THE WATER TANKS FOR WATER REMOVAL.
5. HVAC AIR DISTRIBUTION SHALL USE STANDARD RECTANGULAR DUCTING WITH 1 INCH INSULATION LAYER. FLEXIBLE HOSE DUCT WILL BE USED FOR FRESH AIR INTAKE AND ALSO FOR DEHUMIDIFIER CONNECTION. THE DEHUMIDIFIER IS PLACED IN PARALLEL TO THE REST OF THE DISTRIBUTION SYSTEM SO THAT IF HEAT PUMP IS NOT RUNNING THE DEHUMIDIFIER COULD STILL RUN AND DEHUMIDIFY AIR INTO HOUSE. THIS WILL REDUCE ENERGY CONSUMPTION FOR DAYS WHEN HEATING AND COOLING ARE NOT NEEDED. BATHROOM VENTILATION WILL BE PROVIDED BY A FAN UNDER THE LAVATORY, AND WILL TAKE AIR OUT OF WEST BULKHEAD.
6. INSTALLATION OF MAIN SUPPLY AND RETURN DUCTS, BRANCH DUCT, AND FLOOR DIFFUSERS WILL BE PRE-INSTALLED PER MODULE OF THE HOUSE. CONNECTIONS BETWEEN MAIN DUCTS WILL BE MADE AFTER MODULES ARE PLACED TOGETHER. ALL OTHER MECHANICA EQUIPMENT WILL BE SHIPPED SEPARATELY AND INSTALLED ONSITE.
7. SOLAR WATER HEATING WILL BE PROVIDED BY SUPERSTRUCTURE MOUNTED SOLAR THERMAL FLAT-PLATE COLLECTORS. PIPING WILL BE RUN FROM COLLECTORS INTO A SOLAR THERMAL STORAGE TANK, CONNECTED TO A SECOND SOLAR THERMAL STORAGE TANK FITTED WITH A BACKUP HEATING ELEMENT. IN THE EVENT THAT THE COLLECTORS DON'T PROVIDE SUFFICIENT WATER HEATING, THE BACKUP HEATER WILL MAKE UP THE DIFFERENCE. A MIXING VALVE WILL TAKE WATER FROM SOLAR STORAGE TANKS AND MIX WITH COLD WATER FROM FRESH WATER TANK.

MECHANICAL LEGEND

SYMBOL	ABBRV.	DESCRIPTION
		AIR FLOW DIRECTION ARROW
	BDD	BACK DRAFT DAMPER
	BV	BALL VALVE
		BREAK LINE
	CV	CHECK VALVE
	CD	CONDENSATE DRAIN
	DT	DUCT TRANSITION
		FLOW DIRECTION ARROW
	GV	GATE VALVE
	MV	MIXING VALVE
	PRV	PRESSURE RELIEF VALVE
	P	PUMP
	TPRV	TEMPERATURE & PRESSURE RELIEF VALVE
	VCD	UNION
	VCD	VOLUME CONTROL DAMPER

teamhawai'i

halepilihonua

TEAM NAME: UNIVERSITY OF HAWAII (TEAM HAWAII)

ADDRESS: UNIVERSITY OF HAWAI'I AT MĀNOA
2410 CAMPUS ROAD
HONOLULU, HI 96822

CONTACT: ROCKWOOD@ARCH.HAWAII.EDU
WWW.SOLAR.HAWAII.EDU

CONSULTANTS

ARCHITECTURE:

ENGINEERS:

LANDSCAPING:

CODE CONSULTANTS:

CLIENT

U.S. DEPARTMENT OF ENERGY

SOLAR DECATHLON 2011

WWW.SOLARDECATHLON.GOV

U.S. DEPARTMENT OF ENERGY
SOLAR DECATHLON

MARK	DATE	DESCRIPTION

LOT NUMBER: 306

DRAWN BY: UNIVERSITY OF HAWAI'I

CHECKED BY: CHECKER

COPYRIGHT: UNIVERSITY OF HAWAI'I
SCHOOL OF ARCHITECTURE

SHEET TITLE

MECHANICAL SYMBOLS AND NOTES

M-001

5/8/2011 2:17:18 PM

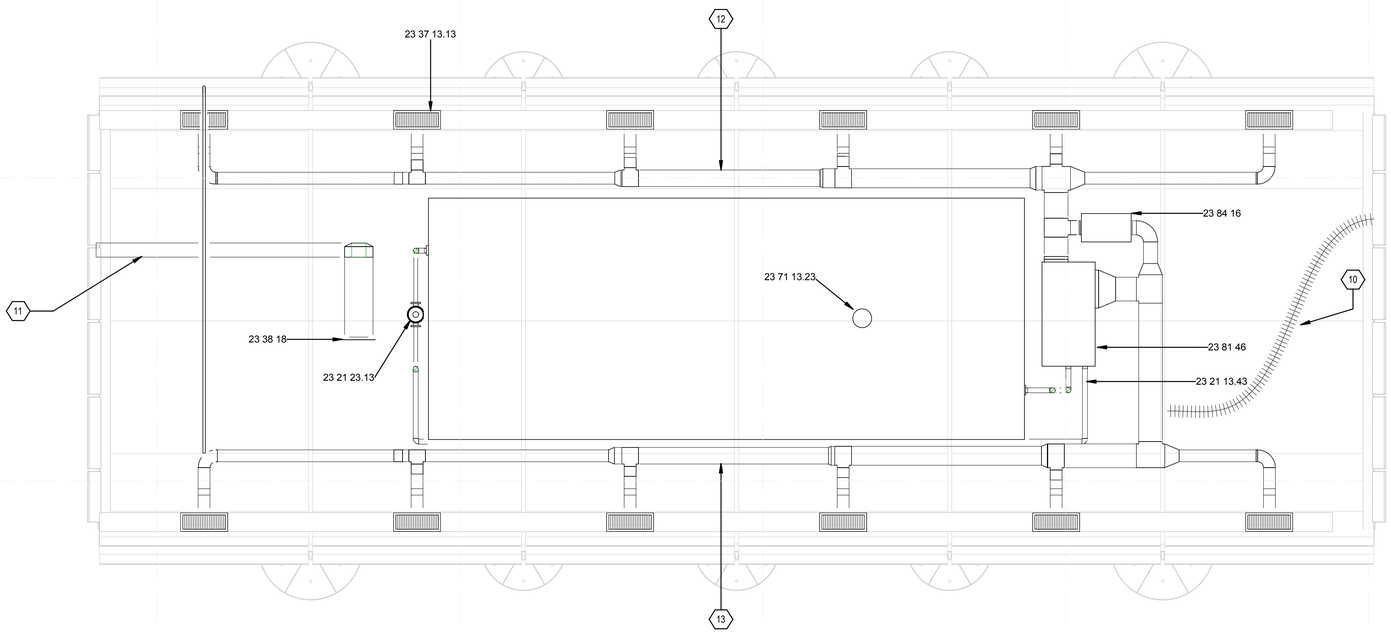

A1 HVAC PLAN
3/8" = 1'-0"

0 2' 4' 6'

GENERAL SHEET NOTES

REFERENCE KEYNOTES

23 21 13.43	THERMAL MASS LOOP HEAT-PUMP PIPING
23 21 23.13	IN-LINE CENTRIFUGAL HYDRONIC PUMPS
23 37 13.13	FLOOR DIFFUSER
23 38 18	ROOM EXHAUST FAN
23 71 13.23	PRESSURIZED-WATER THERMAL STORAGE TANKS
23 81 46	WATER-SOURCE UNITARY HEAT PUMPS
23 84 16	DEHUMIDIFIERS

SHEET KEYNOTES

10	FRESH AIR INTAKE
11	BATHROOM VENTILATION EXHAUST
12	AIR SUPPLY MAIN DUCT
13	AIR RETURN MAIN DUCT

teamhawai'i

halepilihonua

TEAM NAME: UNIVERSITY OF HAWAII (TEAM HAWAII)

ADDRESS: UNIVERSITY OF HAWAI'I AT MĀNOA
2410 CAMPUS ROAD
HONOLULU, HI 96822

CONTACT: ROCKWOOD@ARCH.HAWAII.EDU
WWW.SOLAR.HAWAII.EDU

CONSULTANTS

ARCHITECTURE:

ENGINEERS:

LANDSCAPING:

CODE CONSULTANTS:

CLIENT

U.S. DEPARTMENT OF ENERGY

SOLAR DECATHLON 2011

WWW.SOLARDECATHLON.GOV

U.S. DEPARTMENT OF ENERGY SOLAR DECATHLON

MARK	DATE	DESCRIPTION

LOT NUMBER:	306
DRAWN BY:	UNIVERSITY OF HAWAI'I
CHECKED BY:	CHECKER
COPYRIGHT:	UNIVERSITY OF HAWAI'I SCHOOL OF ARCHITECTURE

SHEET TITLE

HVAC EQUIPMENT AND DISTRIBUTION PLAN

M-101

5/8/2011 2:17:26 PM

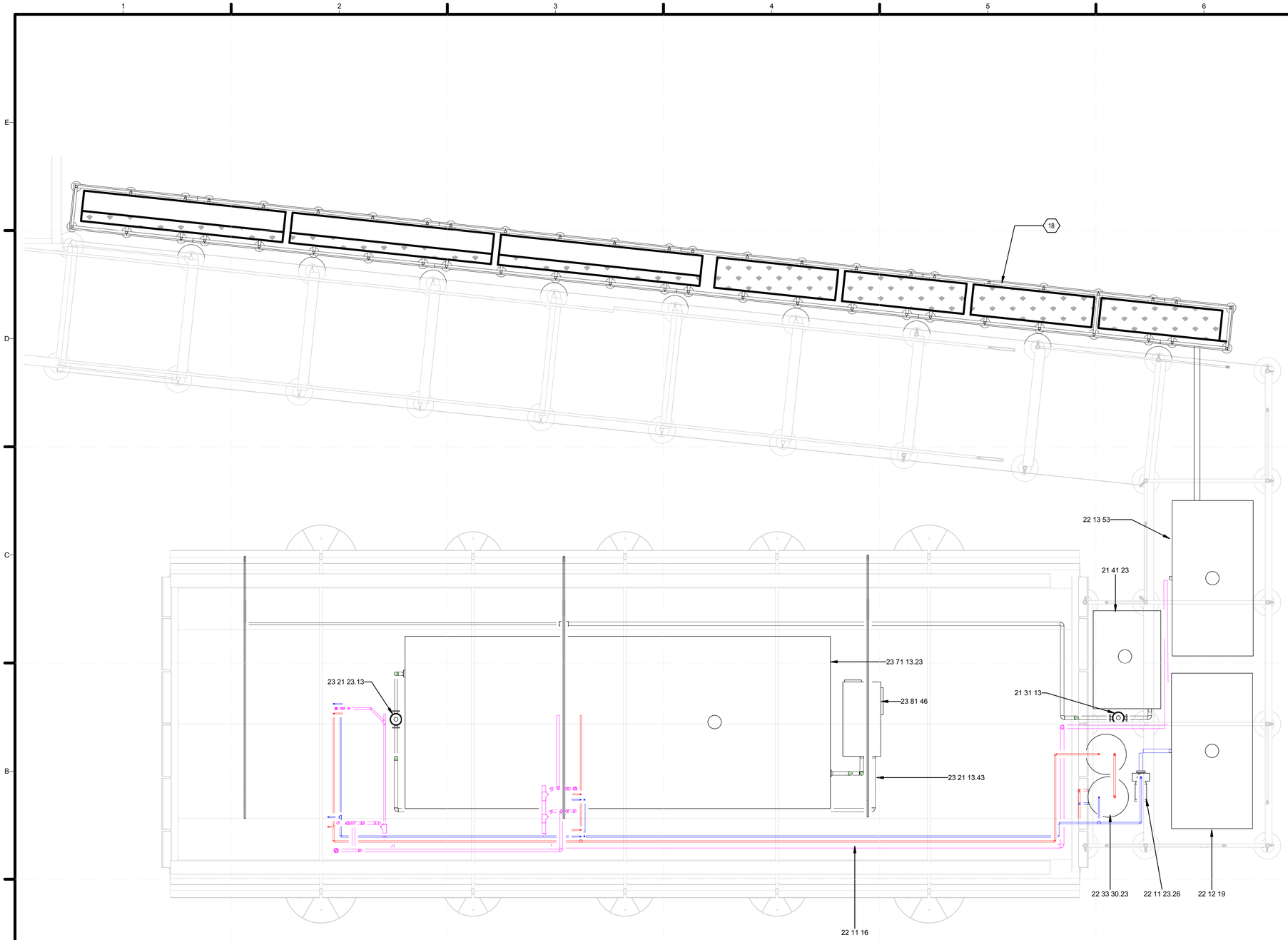

A1 SPILL CONTAINMENT PLAN
3/8" = 1'-0"

0 2' 4' 6'

GENERAL SHEET NOTES

REFERENCE KEYNOTES

21 31 13	ELECTRIC-DRIVE, CENTRIFUGAL FIRE PUMPS
21 41 23	GROUND SUCTION STORAGE TANKS FOR FIRE-SUPPRESSION WATER
22 11 16	DOMESTIC WATER PIPING
22 11 23.26	CLOSE-COUPLED, HORIZONTALLY MOUNTED, IN-LINE CENTRIFUGAL DOMESTIC-WATER PUMPS
22 12 19	FACILITY GROUND-MOUNTED, POTABLE WATER STORAGE TANKS
22 13 53	FACILITY SEPTIC TANKS
22 33 30.23	RESIDENTIAL, COLLECTOR-TO-TANK, SOLAR-ELECTRIC DOMESTIC WATER HEATERS
23 21 13.43	THERMAL MASS LOOP HEAT-PUMP PIPING
23 21 23.13	IN-LINE CENTRIFUGAL HYDRONIC PUMPS
23 71 13.23	PRESSURIZED-WATER THERMAL STORAGE TANKS
23 81 46	WATER-SOURCE UNITARY HEAT PUMPS

SHEET KEYNOTES

18	AQUAPONICS TANKS

teamhawai'i

halepilihonua

TEAM NAME: UNIVERSITY OF HAWAII (TEAM HAWAII)

ADDRESS: UNIVERSITY OF HAWAI'I AT MĀNOA
2410 CAMPUS ROAD
HONOLULU, HI 96822

CONTACT: ROCKWOOD@ARCH.HAWAII.EDU
WWW.SOLAR.HAWAII.EDU

CONSULTANTS

ARCHITECTURE:

ENGINEERS:

LANDSCAPING:

CODE CONSULTANTS:

CLIENT

U.S. DEPARTMENT OF ENERGY
SOLAR DECATHLON 2011
WWW.SOLARDECATHLON.GOV

U.S. DEPARTMENT OF ENERGY SOLAR DECATHLON

MARK	DATE	DESCRIPTION

LOT NUMBER:	306
DRAWN BY:	UNIVERSITY OF HAWAI'I
CHECKED BY:	Checker
COPYRIGHT:	UNIVERSITY OF HAWAI'I SCHOOL OF ARCHITECTURE

SHEET TITLE

SPILL CONTAINMENT PLAN

M-102

5/8/2011 2:17:42 PM

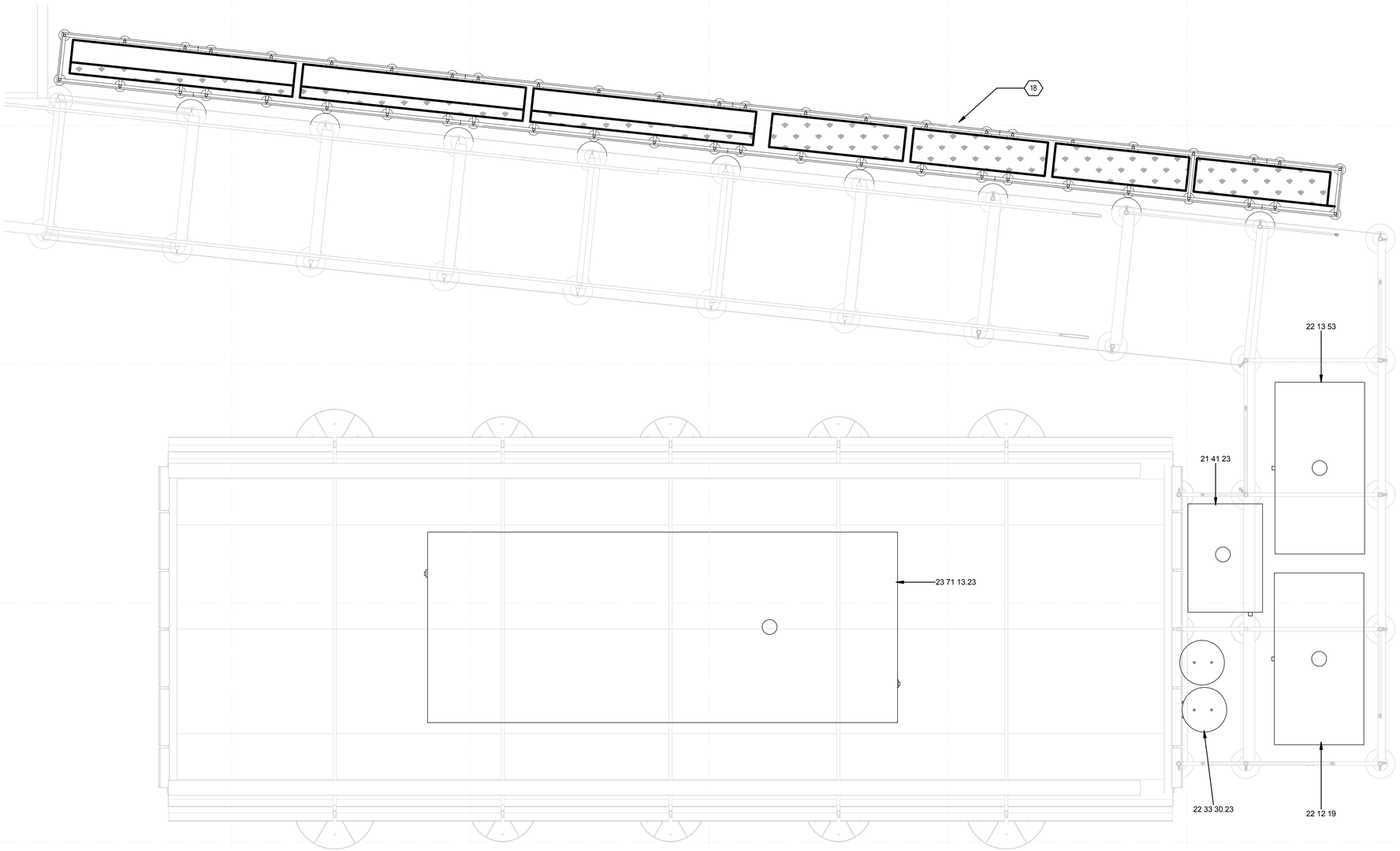

A1 CONTAINER LOCATIONS PLAN
3/8" = 1'-0"

0 2' 4' 6'

GENERAL SHEET NOTES

REFERENCE KEYNOTES

21 41 23	GROUND SUCTION STORAGE TANKS FOR FIRE-SUPPRESSION WATER
22 12 19	FACILITY GROUND-MOUNTED, POTABLE WATER STORAGE TANKS
22 13 53	FACILITY SEPTIC TANKS
22 33 30.23	RESIDENTIAL, COLLECTOR-TO-TANK, SOLAR-ELECTRIC DOMESTIC WATER HEATERS
23 71 13.23	PRESSURIZED-WATER THERMAL STORAGE TANKS

SHEET KEYNOTES

18	AQUAPONICS TANKS

teamhawai'i
halepilihonua

TEAM NAME: UNIVERSITY OF HAWAII (TEAM HAWAII)
ADDRESS: UNIVERSITY OF HAWAI'I AT MĀNOA
2410 CAMPUS ROAD
HONOLULU, HI 96822
CONTACT: ROCKWOOD@ARCH.HAWAII.EDU
WWW.SOLAR.HAWAII.EDU

CONSULTANTS
ARCHITECTURE:
ENGINEERS:
LANDSCAPING:
CODE CONSULTANTS:

CLIENT
U.S. DEPARTMENT OF ENERGY
SOLAR DECATHLON 2011
WWW.SOLARDECATHLON.GOV

U.S. DEPARTMENT OF ENERGY
SOLAR DECATHLON

MARK	DATE	DESCRIPTION

LOT NUMBER:	306
DRAWN BY:	UNIVERSITY OF HAWAI'I
CHECKED BY:	Checker
COPYRIGHT:	UNIVERSITY OF HAWAI'I SCHOOL OF ARCHITECTURE

SHEET TITLE
CONTAINER LOCATIONS PLAN

M-103

5/8/2011 2:17:56 PM

MECHANICAL FOOTING SCHEDULE					
FOOTING TYPE	QUANTITY	SIZE DIA	AREA (SF)	TOTAL FILLED LOAD PER TANK (LBS)	FOOTING PRESSURE (PSF)
E (WATER TANKS)	8	1'	0.7854	4,360	1,387.8
F (FIRE TANK)	4	10"	0.5454	2,615	1,198.6
G (HOT WATER TANKS)	1	N/A	0.8194	454 (2 CT)	1,108.1

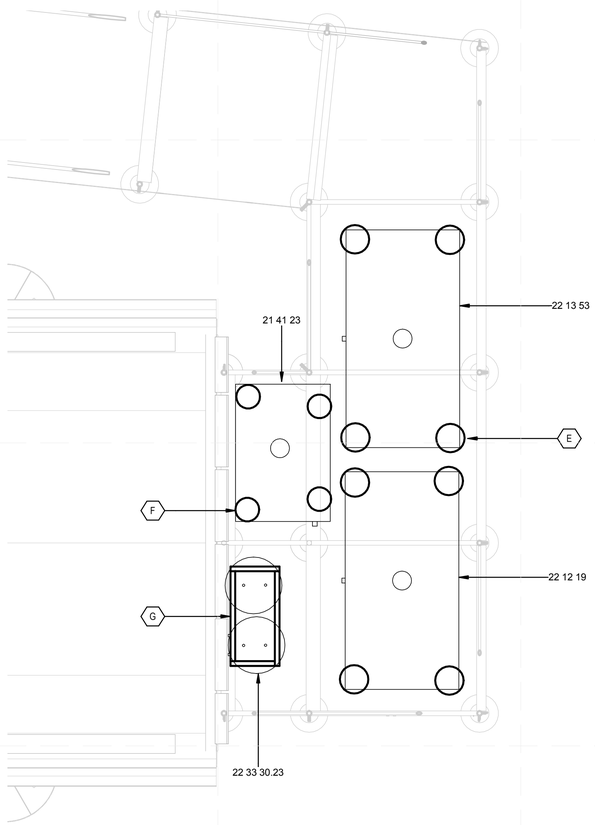

A1 MECHANICAL GROUND CONTACT PLAN
3/8" = 1'-0"

0 2' 4' 6'

GENERAL SHEET NOTES

1. ALL MECHANICAL EQUIPMENT LOCATED IN THE UNDER-PORCH AREA WILL BE ELEVATED 3-1/2 INCH OFF THE GROUND ON STANDS.
2. THESE STANDS WILL HAVE FOOTINGS AS SHOWN WITH PRESSURES INDICATED IN MECHANICAL FOOTING SCHEDULE.

REFERENCE KEYNOTES

21 41 23	GROUND SUCTION STORAGE TANKS FOR FIRE-SUPPRESSION WATER
22 12 19	FACILITY GROUND-MOUNTED, POTABLE WATER STORAGE TANKS
22 13 53	FACILITY SEPTIC TANKS
22 33 30.23	RESIDENTIAL, COLLECTOR-TO-TANK, SOLAR-ELECTRIC DOMESTIC WATER HEATERS

SHEET KEYNOTES

E	TYPICAL WATER TANK FOOTING
F	TYPICAL FIRE TANK FOOTING
G	HOT WATER TANKS FOOTING

teamhawai'i
halepilihonua

TEAM NAME: UNIVERSITY OF HAWAII (TEAM HAWAII)
ADDRESS: UNIVERSITY OF HAWAI'I AT MĀNOA
2410 CAMPUS ROAD
HONOLULU, HI 96822
CONTACT: ROCKWOOD@ARCH.HAWAII.EDU
WWW.SOLAR.HAWAII.EDU

CONSULTANTS
ARCHITECTURE:
ENGINEERS:
LANDSCAPING:
CODE CONSULTANTS:

CLIENT
U.S. DEPARTMENT OF ENERGY
SOLAR DECATHLON 2011
WWW.SOLARDECATHLON.GOV

U.S. DEPARTMENT OF ENERGY SOLAR DECATHLON

MARK	DATE	DESCRIPTION

LOT NUMBER:	306
DRAWN BY:	UNIVERSITY OF HAWAI'I
CHECKED BY:	Checker
COPYRIGHT:	UNIVERSITY OF HAWAI'I SCHOOL OF ARCHITECTURE

SHEET TITLE
MECHANICAL GROUND CONTACT PLAN

M-104

5/6/2011 2:18:03 PM

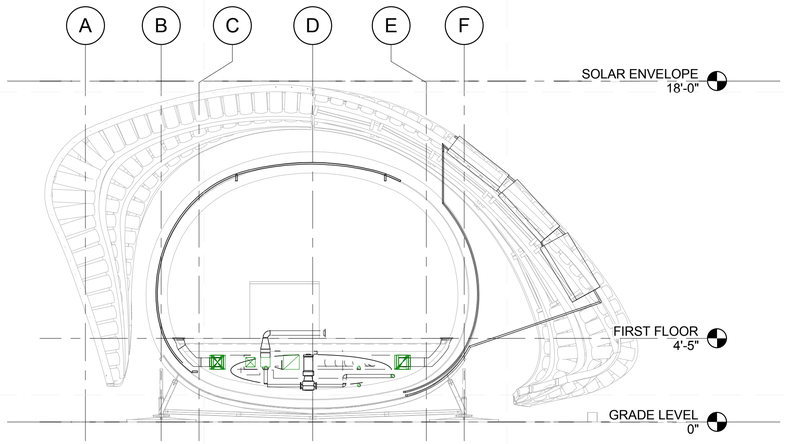

C1 WEST MECHANICAL ELEVATION
1/4" = 1'-0"
0 2' 4' 8'

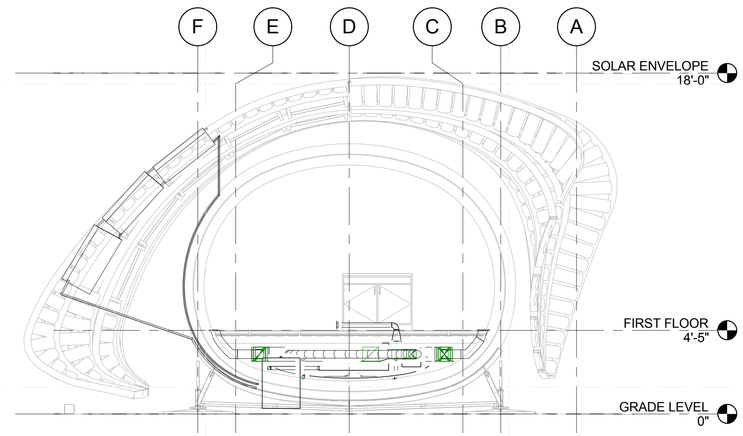

C4 EAST MECHANICAL
1/4" = 1'-0"
0 2' 4' 8'

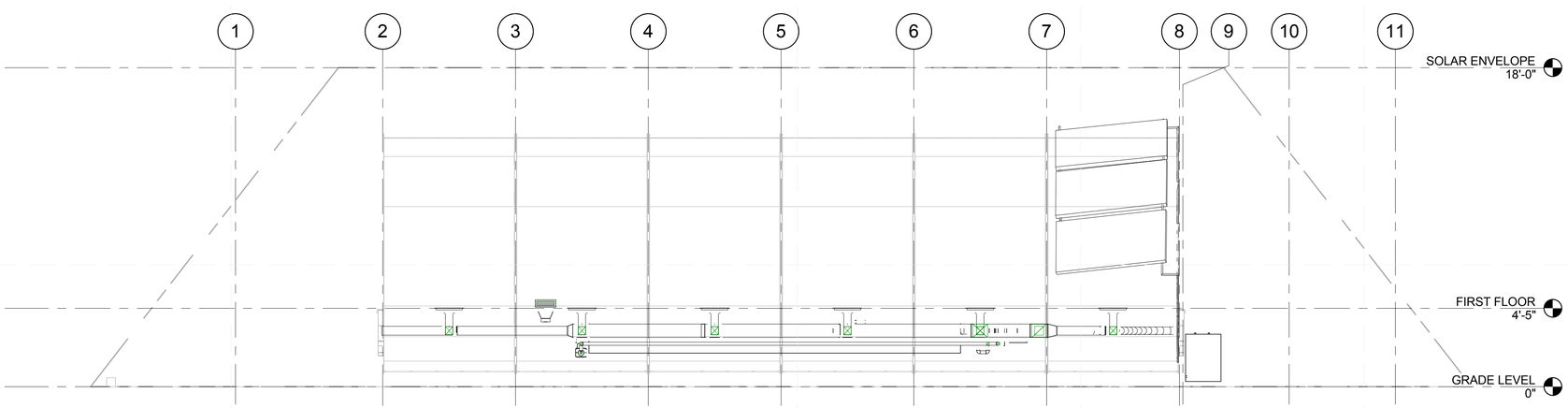

A1 SOUTH MECHANICAL
1/4" = 1'-0"
0 2' 4' 8'

GENERAL SHEET NOTES

REFERENCE KEYNOTES

SHEET KEYNOTES

teamhawai'i
halepilihonua

TEAM NAME: UNIVERSITY OF HAWAII (TEAM HAWAII)
ADDRESS: UNIVERSITY OF HAWAI'I AT MĀNOA
2410 CAMPUS ROAD
HONOLULU, HI 96822
CONTACT: ROCKWOOD@ARCH.HAWAII.EDU
WWW.SOLAR.HAWAII.EDU

CONSULTANTS
ARCHITECTURE:
ENGINEERS:
LANDSCAPING:
CODE CONSULTANTS:

CLIENT
U.S. DEPARTMENT OF ENERGY
SOLAR DECATHLON 2011
WWW.SOLARDECATHLON.GOV

U.S. DEPARTMENT OF ENERGY
SOLAR DECATHLON

MARK	DATE	DESCRIPTION

LOT NUMBER: 306
DRAWN BY: UNIVERSITY OF HAWAI'I
CHECKED BY: CHECKER
COPYRIGHT: UNIVERSITY OF HAWAI'I
SCHOOL OF ARCHITECTURE

SHEET TITLE
MECHANICAL ELEVATIONS

M-201

5/6/2011 2:18:37 PM

WATER COOLED AIR CONDITIONING EQUIPMENT SCHEDULE

DESCRIPTION	MANUFACTURER	MODEL	FLOW RATE		COOLING EWT 86°F		HEATING EWT 68°F		PSC FAN MOTOR		COMPRESSOR (1 EACH)			RATED VOLTAGE			TOTAL UNIT	MIN CIRC	MAX FUSE
			GPM	CFM	CAPACITY BTUH	EER BTUH/W	CAPACITY BTUH	COP	HP [W]	FLA	FACTORY CHARGE R410A, OZ [KG]	RLA	LRA	V	HZ	PH	FLA	AMP	HACR
WATER-SOURCE HEAT PUMP	JOHNSON CONTROLS	RJSH015ER000C	4.0	500	14,400	15.9	18,500	5.3	1/6 [134]	4.0	38 [1.08]	6.2	29.0	230	60	1	10.2	11.8	15

HVAC EQUIPMENT SCHEDULE

DESCRIPTION	MANUFACTURER	MODEL	FLOW RATE		POWER		CURRENT AMPS	RATED VOLTAGE			DIMENSIONS INCH
			GPM	CFM	HP	WATTS		V	HZ	PH	
DEHUMIDIFIER	THERMA-STOR LLC	ULTRA-AIRE 65H	—	500	—	680	5.50	120	60	1	21 W X 12 H X 12 D
THERMAL MASS CIRCULATING PUMP	GRUNDFOS	UP15-18 BUC 7	0 - 16	—	1/25	—	0.74	120	60	1	5-1/4 H X 7-3/4 L X 3-3/4 W
BATHROOM VENTILATION FAN	PANASONIC	WHISPERGREEN LITE VENTILATION FAN FV-08VKML3	—	80	—	14.9	0.12	120	60	1	11.5H x 14.17W x 16.73D
HVAC CONTROLS	JOHNSON CONTROLS	RJ SERIES CONTROLS PREMIER MICROPROCESSOR	—	—	—	—	—	120	60	1	———
THERMAL MASS PILLOW TANK	RAINWATER COLLECTION SOLUTIONS, INC	1200 GALLON PILLOW TANK	—	—	—	—	—	—	—	—	15' L X 8' W X 2' H [FEET]
PHASE CHANGE MATERIAL	PCM PRODUCTS LTD	TUBEICE ENAPSULATED PCM	—	—	—	—	—	—	—	—	1000 MM LENTH 50 MM DIAMETER

SOLAR THERMAL EQUIPMENT SCHEDULE

DESCRIPTION	MANUFACTURER	MODEL	DAILY INSOLATION BTU 500 ZONE (400 ZONE)	PANEL COATING	PANEL SIZE (INCH)
HEATING SOLAR FLAT-PLATE COLLECTORS	HELIODYNE	GOBI 406	26,199 (19,742)	BLACK PAINT	47.56 X 81.56

HVAC DUCT AND PIPING SCHEDULE

DESCRIPTION	MATERIAL	LENGTH	INSULATION
RECTANGULAR METAL DUCT	FABRICATED SHEET METAL	~100 FEET	1 INCH LAYER
1 INCH THERMAL MASS PIPE	COPPER TYPE K	~30 FEET	1 INCH LAYER

MECHANICAL VALVE SCHEDULE

FAMILY	TYPE	CONNECTION SIZE DIAMETER INCH	COUNT
HVAC AIR DISTRIBUTION	VOLUME-CONTROL DAMPER	6	12
HVAC AIR DISTRIBUTION	BACK DRAFT DAMPER	7.5	2
THERMAL MASS LOOP	GATE VALVE	1	4
THERMAL MASS LOOP	BALL VALVE	1	2
THERMAL MASS LOOP	CHECK VALVE	1	2
HVAC EQUIPMENT	CONDENSATE DRAIN	1	2

teamhawai'i

halepilihonua

TEAM NAME: UNIVERSITY OF HAWAII (TEAM HAWAII)

ADDRESS: UNIVERSITY OF HAWAI'I AT MĀNOA
2410 CAMPUS ROAD
HONOLULU, HI 96822

CONTACT: ROCKWOOD@ARCH.HAWAII.EDU
WWW.SOLAR.HAWAII.EDU

CONSULTANTS

ARCHITECTURE:

ENGINEERS:

LANDSCAPING:

CODE CONSULTANTS:

CLIENT

U.S. DEPARTMENT OF ENERGY

SOLAR DECATHLON 2011

WWW.SOLARDECATHLON.GOV

U.S. DEPARTMENT OF ENERGY SOLAR DECATHLON

MARK	DATE	DESCRIPTION

LOT NUMBER: 306

DRAWN BY: UNIVERSITY OF HAWAI'I

CHECKED BY: CHECKER

COPYRIGHT: UNIVERSITY OF HAWAI'I SCHOOL OF ARCHITECTURE

SHEET TITLE

MECHANICAL SCHEDULES

M-601

5/8/2011 2:18:43 PM

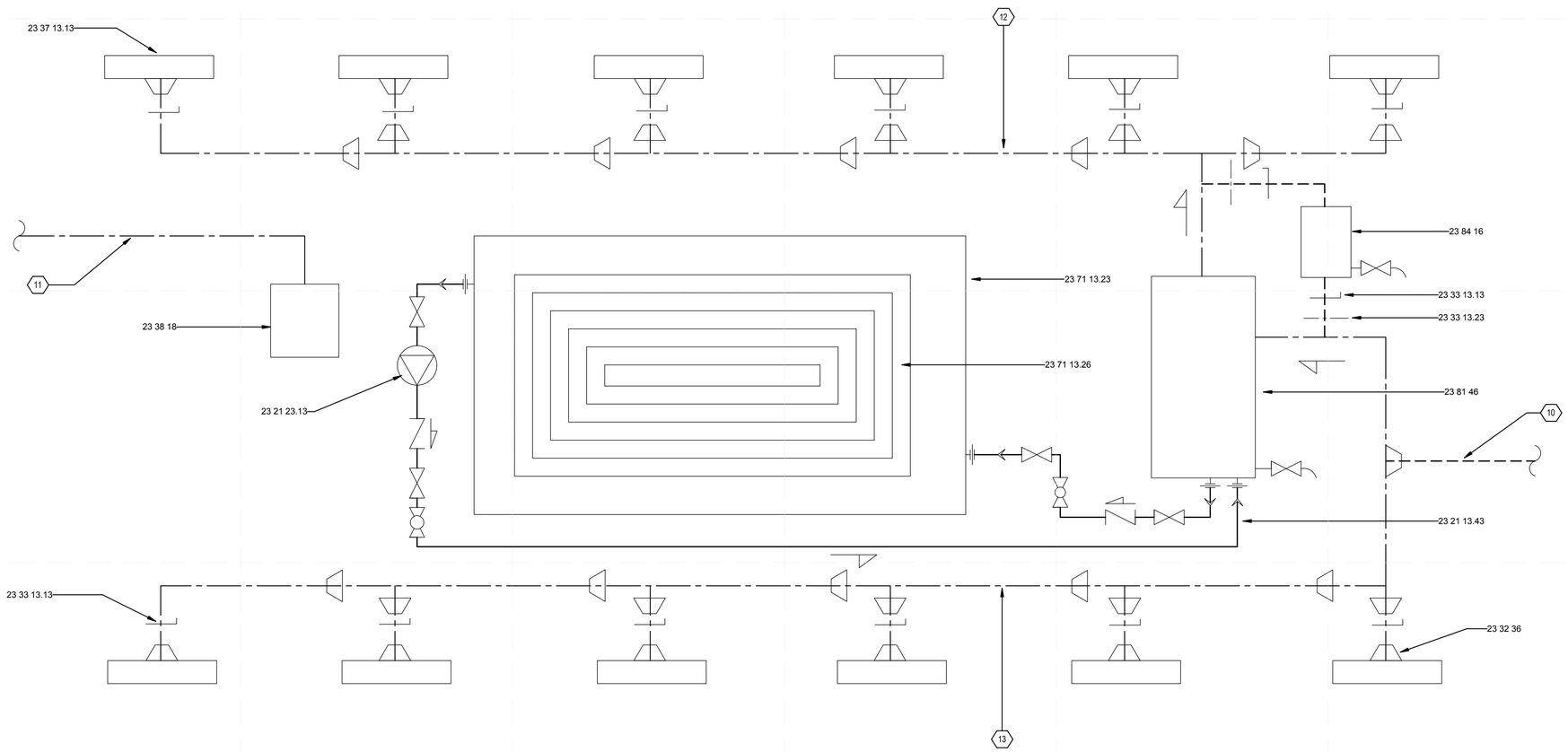

A1 HVAC DIAGRAM
NTS

GENERAL SHEET NOTES

REFERENCE KEYNOTES

23 21 13.43	THERMAL MASS LOOP HEAT-PUMP PIPING
23 21 23.13	IN-LINE CENTRIFUGAL HYDRONIC PUMPS
23 32 36	AIR-DISTRIBUTION FLOOR PLENUMS
23 33 13.13	VOLUME-CONTROL DAMPERS
23 33 13.23	BACKDRAFT DAMPERS
23 37 13.13	FLOOR DIFFUSER
23 38 18	ROOM EXHAUST FAN
23 71 13.23	PRESSURIZED-WATER THERMAL STORAGE TANKS
23 71 13.26	PHASE CHANGE MATERIAL FOR THERMAL STORAGE
23 81 46	WATER-SOURCE UNITARY HEAT PUMPS
23 84 16	DEHUMIDIFIERS

SHEET KEYNOTES

10	FRESH AIR INTAKE
11	BATHROOM VENTILATION EXHAUST
12	AIR SUPPLY MAIN DUCT
13	AIR RETURN MAIN DUCT

teamhawai'i
halepilihonua

TEAM NAME: UNIVERSITY OF HAWAII (TEAM HAWAII)

ADDRESS: UNIVERSITY OF HAWAI'I AT MĀNOA
2410 CAMPUS ROAD
HONOLULU, HI 96822

CONTACT: ROCKWOOD@ARCH.HAWAII.EDU
WWW.SOLAR.HAWAII.EDU

CONSULTANTS

ARCHITECTURE:

ENGINEERS:

LANDSCAPING:

CODE CONSULTANTS:

CLIENT

U.S. DEPARTMENT OF ENERGY

SOLAR DECATHLON 2011

WWW.SOLARDECATHLON.GOV

U.S. DEPARTMENT OF ENERGY
SOLAR DECATHLON

MARK	DATE	DESCRIPTION

LOT NUMBER: 306

DRAWN BY: UNIVERSITY OF HAWAI'I

CHECKED BY: CHECKER

COPYRIGHT: UNIVERSITY OF HAWAI'I
SCHOOL OF ARCHITECTURE

SHEET TITLE

HVAC DIAGRAMS

M-602

5/8/2011 2:18:47 PM

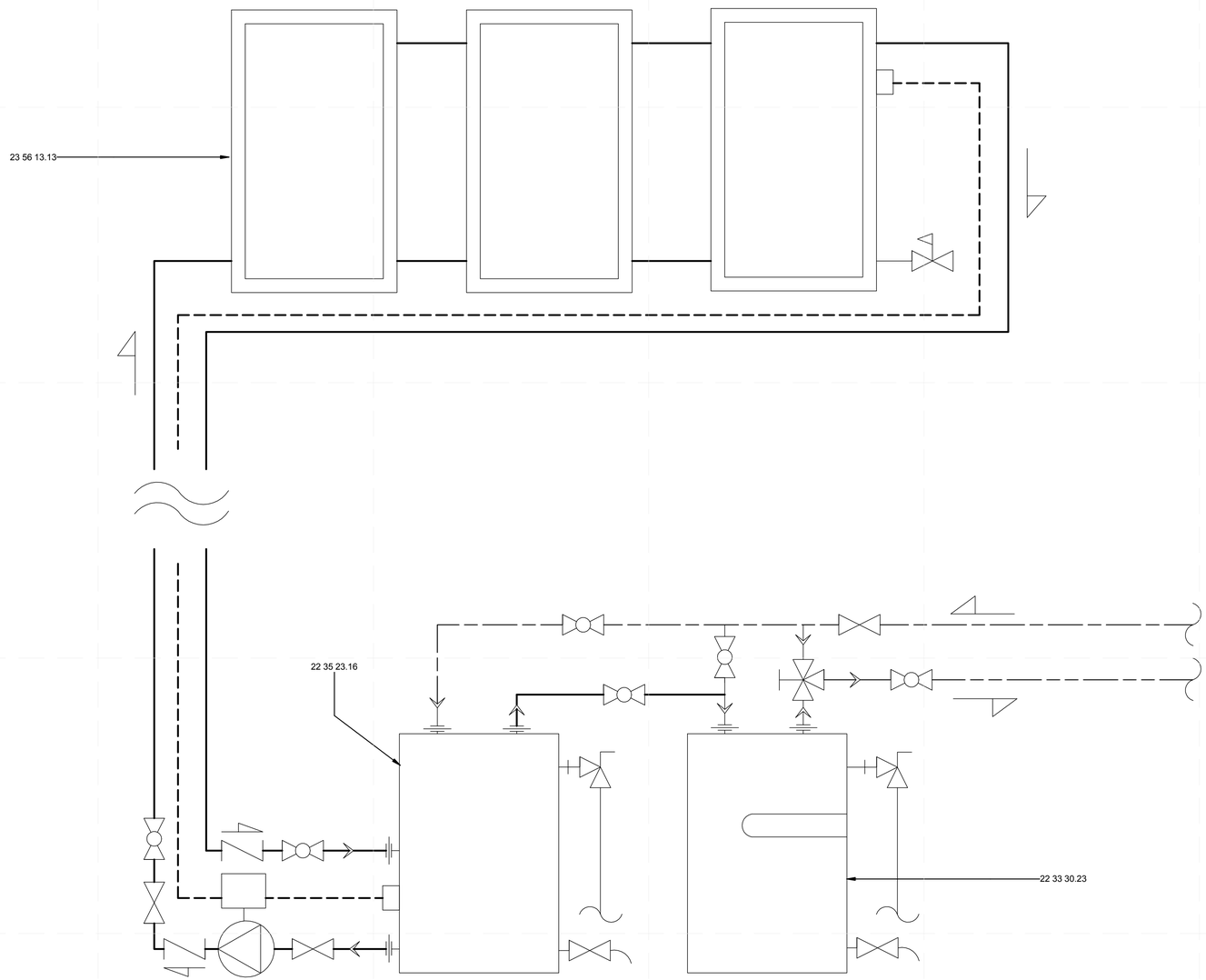

A1 SOLAR WATER DIAGRAM
NTS

GENERAL SHEET NOTES

REFERENCE KEYNOTES

22 33 30.23	RESIDENTIAL, COLLECTOR-TO-TANK, SOLAR-ELECTRIC DOMESTIC WATER HEATERS
22 35 23.16	CIRCULATING, STORAGE DOMESTIC WATER HEAT EXCHANGERS
23 56 13.13	HEATING SOLAR FLAT-PLATE COLLECTORS

SHEET KEYNOTES

teamhawai'i
halepilihonua

TEAM NAME: UNIVERSITY OF HAWAII (TEAM HAWAII)
ADDRESS: UNIVERSITY OF HAWAI'I AT MĀNOA
2410 CAMPUS ROAD
HONOLULU, HI 96822
CONTACT: ROCKWOOD@ARCH.HAWAII.EDU
WWW.SOLAR.HAWAII.EDU

CONSULTANTS
ARCHITECTURE:
ENGINEERS:
LANDSCAPING:
CODE CONSULTANTS:

CLIENT
U.S. DEPARTMENT OF ENERGY
SOLAR DECATHLON 2011
WWW.SOLARDECATHLON.GOV

U.S. DEPARTMENT OF ENERGY SOLAR DECATHLON

MARK	DATE	DESCRIPTION

LOT NUMBER:	306
DRAWN BY:	UNIVERSITY OF HAWAI'I
CHECKED BY:	CHECKER
COPYRIGHT:	UNIVERSITY OF HAWAI'I SCHOOL OF ARCHITECTURE

SHEET TITLE
SOLAR WATER DIAGRAMS

M-603

5/8/2011 2:18:52 PM

A1 HVAC ISOMETRIC

5/6/2011 2:20:58 PM

teamhawai'i

halepilihonua

TEAM NAME:	UNIVERSITY OF HAWAII (TEAM HAWAII)
ADDRESS:	UNIVERSITY OF HAWAI'I AT MĀNOA 2410 CAMPUS ROAD HONOLULU, HI 96822
CONTACT:	ROCKWOOD@ARCH.HAWAII.EDU WWW.SOLAR.HAWAII.EDU

CONSULTANTS

ARCHITECTURE:

ENGINEERS:

LANDSCAPING:

CODE CONSULTANTS:

CLIENT

U.S. DEPARTMENT OF ENERGY

SOLAR DECATHLON 2011

WWW.SOLARDECATHLON.GOV

U.S. DEPARTMENT OF ENERGY SOLAR DECATHLON

MARK	DATE	DESCRIPTION

LOT NUMBER:	306
DRAWN BY:	UNIVERSITY OF HAWAI'I
CHECKED BY:	CHECKER
COPYRIGHT:	UNIVERSITY OF HAWAI'I SCHOOL OF ARCHITECTURE

SHEET TITLE

HVAC ISOMETRICS

M-901

A1 SOLAR WATER ISOMETRIC

5/8/2011 2:21:56 PM

teamhawai'i

halepilihonua

TEAM NAME: UNIVERSITY OF HAWAII (TEAM HAWAII)

ADDRESS: UNIVERSITY OF HAWAI'I AT MĀNOA
2410 CAMPUS ROAD
HONOLULU, HI 96822

CONTACT: ROCKWOOD@ARCH.HAWAII.EDU
WWW.SOLAR.HAWAII.EDU

CONSULTANTS

ARCHITECTURE:

ENGINEERS:

LANDSCAPING:

CODE CONSULTANTS:

CLIENT

U.S. DEPARTMENT OF ENERGY

SOLAR DECATHLON 2011

WWW.SOLARDECATHLON.GOV

U.S. DEPARTMENT OF ENERGY SOLAR DECATHLON

MARK	DATE	DESCRIPTION

LOT NUMBER: 306

DRAWN BY: UNIVERSITY OF HAWAI'I

CHECKED BY: CHECKER

COPYRIGHT: UNIVERSITY OF HAWAI'I
SCHOOL OF ARCHITECTURE

SHEET TITLE

SOLAR WATER ISOMETRICS

M-902

GENERAL NOTES:

1. THE CONTRACTOR SHALL COMPLY WITH THE CONSTRUCTION PRACTICES AND REQUIREMENTS
OF THE 2008 EDITION OF THE NATIONAL ELECTRIC CODE (NFPA 70), NATIONAL ELECTRICAL SAFETY CODE, AMERICAN ELECTRICIANS HANDBOOK BY CROFT EDISON ELECTRIC INSTITUTE, APPLICABLE INSTALLATION INSTRUCTIONS OF MANUFACTURERS OF EQUIPMENT AND MATERIALS SUPPLIED FOR THE PROJECT, AND ALL ORDINANCES, RULES AND POLICIES OF THE STATE DISTRICT AND COUNTY IN WHICH THE WORK IS TO BE PERFORMED.

2. COORDINATE WITH OTHER TRADES AND CONFIRM THE EXACT EQUIPMENT LOCATIONS AND RATINGS MOUNTING HEIGHTS OF ALL POWER AND LIGHTING DEVICES BEFORE ROUGHING IN.

3. THE CONTRACTOR SHALL PROVIDE ALL JUNCTION AND PULL BOXES REQUIRED FOR THE INSTALLATION OF ELECTRICAL DEVICES AND EQUIPMENT, WHETHER OR NOT SPECIFICALLY INDICATED ON THE PLANS. SIZING OF THESE BOXES SHALL BE PER THE NATIONAL ELECTRICAL CODE.

4. THE CONTRACTOR SHALL FURNISH ALL EQUIPMENT AND CIRCUITING FOR TEMPORARY CONSTRUCTION POWER AS REQUIRED.

5. THE CONTRACTOR SHALL OBTAIN APPROVAL FROM THE ARCHITECT BEFORE MAKING ANY PENETRATIONS THROUGH STRUCTURAL MEMEMBERS OR FIRE RATED WALLS AND SLABS.

6. SHOULD PROJECT CONDITIONS REQUIRE REARRANGMENT OF WORK, THE CONTRACTOR SHALL MARK SUCH CHANGES ON THE AS-BUILT DRAWINGS.

7. THE CONTRACTOR SHALL SUBMIT DRAWINGS IN ACCORDANCE WITH THE CONTRACT DOCUMENTS. TESTING SHALL BE DONE IN ACCORDANCE WITH THE CONTRACT DOCUMENTS.

8. ALL 15A AND 20A RECEPTACLES SHALL BE TAMPER RESISTANT RECEPTACLES.

9. ARC FAULT CIRCUIT INTERRUPTING CIRCUIT BREAKERS SHALL BE PROVIDED FOR ALL 15A AND 20A BRANCH CIRCUITS.

ELECTRICAL SYMBOLS:

NOTE: NOT ALL SYMBOLS USED

	LED LIGHT FIXTURE, RAMP, SOLAR POWERED
	LED LIGHT STRIP CONCEALED BEHIND TRANSLUCENT FRP PANELS
S	SINGLE POLE SWITCH, WALL MOUNTED +44" UNLESS OTHERWISE NOTED
3S	THREE WAY POLE SWITCH, WALL MOUNTED +44" UNLESS OTHERWISE NOTED
	DUPLEX RECEPTACLE TAMPER RESISTANT NEMA 5-20 R
	GFCI TAMPER RESISTANT COUNTERTOP DUPLEX RECEPTACLE, NEMA 5-20R WALL MOUNTED 6" ABOVE COUNTERTOP, OR AS NOTED
	DUPLEX RECEPTACLE TAMPER RESISTANT NEMA 5-20R HALF SWITCHED, WALL MOUNTED +INSIDE EDGE WITHIN 8" OF WALL
	GFCI DUPLEX RECEPTACLE TAMPER RESISTANT NEMA 5-20R WALL MOUNTED +18" UNLESS OTHERWISE NOTED
	WP-GFCI DUPLEX RECEPTACLE TAMPER RESISTANT NEMA 5-20R WALL MOUNTED +18" UNLESS OTHERWISE NOTED
	ELECTRIC DRYER RECEPTACLE TAMPER RESISTANT NEMA 5-20R WALL MOUNTED +48" UNLESS OTHERWISE NOTED, NEMA 14-30R
	UNDER COUNTER COOK TOP RECEPTICLE NEMA 5-20R
	DUPLEX RECEPTACLE TAMPER RESISTANT NEMA 5-20R FLOOR MOUNTED INSIDE EDGE WITHIN 8" OF WALL
WP	WEATHERPROOF, INDICATE PROVIDE WEATHER PROOF HOUSING AND COVER, FOR RECEPTACLES ALSO INDICATE DEVICE SHALL BE U.L. LISTED WEATHERPROOF
	TELECOMMUNICATION JACK
	LOAD CENTER
	DISCONNECT SWITCH, MINIMUM RATINGS SHALL MATCH OVER CURRENT PROTECTION DEVICE BEING SERVED FROM
J	JUNCTION BOX
S	SMOKE DETECTOR, HARD-WIRED, INTERCONNECTED
	WIRES IN CONDUIT , EXPOSED
	WIRES BENEATH FINISH GRADE
	WIRES IN CONDUIT RUN IN WALL OR CEILING, METAL CLAD CU. MAY BE USED SUBJECT TO LOCAL ORDINANCE
	HOMERUN OF CONDUIT AND WIRES
	GROUNDING PLATE ELECTRODE
M	METER SOCKET
D	DMX BOX
I	INVERTER
	GROUND
R	RECTIFIER BOX
	MICROPHONE
	KINECT CAMERA
	AUDIO INTERFACE & MIXER BOX
	AC DISCONNECT
	LIGHT SENSOR
	REMOTE POWER CONTROL
S	pH/TEMPERATURE/TDS SENSOR
P	WATER PUMP
	USB WIRELESS
	USB HUB
	AUDIO MIXER
T	TELECOM CABINET
L	SAMSUNG 17" I7 LAPTOP

teamhawai'i

halepilihonua

TEAM NAME:	UNIVERSITY OF HAWAII (TEAM HAWAII)
ADDRESS:	UNIVERSITY OF HAWAI'I AT MĀNOA 2410 CAMPUS ROAD HONOLULU, HI 96822
CONTACT:	ROCKWOOD@ARCH.HAWAII.EDU WWW.SOLAR.HAWAII.EDU

CONSULTANTS

ARCHITECTURE:

ENGINEERS:

LANDSCAPING:

CODE CONSULTANTS:

CLIENT

U.S. DEPARTMENT OF ENERGY

SOLAR DECATHLON 2011

WWW.SOLARDECATHLON.GOV

U.S. DEPARTMENT OF ENERGY SOLAR DECATHLON

MARK	DATE	DESCRIPTION

LOT NUMBER:	306
DRAWN BY:	UNIVERSITY OF HAWAI'I
CHECKED BY:	RONALD HO & ASSOCIATES
COPYRIGHT:	UNIVERSITY OF HAWAI'I SCHOOL OF ARCHITECTURE

SHEET TITLE

ELECTRICAL SYMBOLS AND NOTES

E-001

5/8/2011 2:03:34 PM

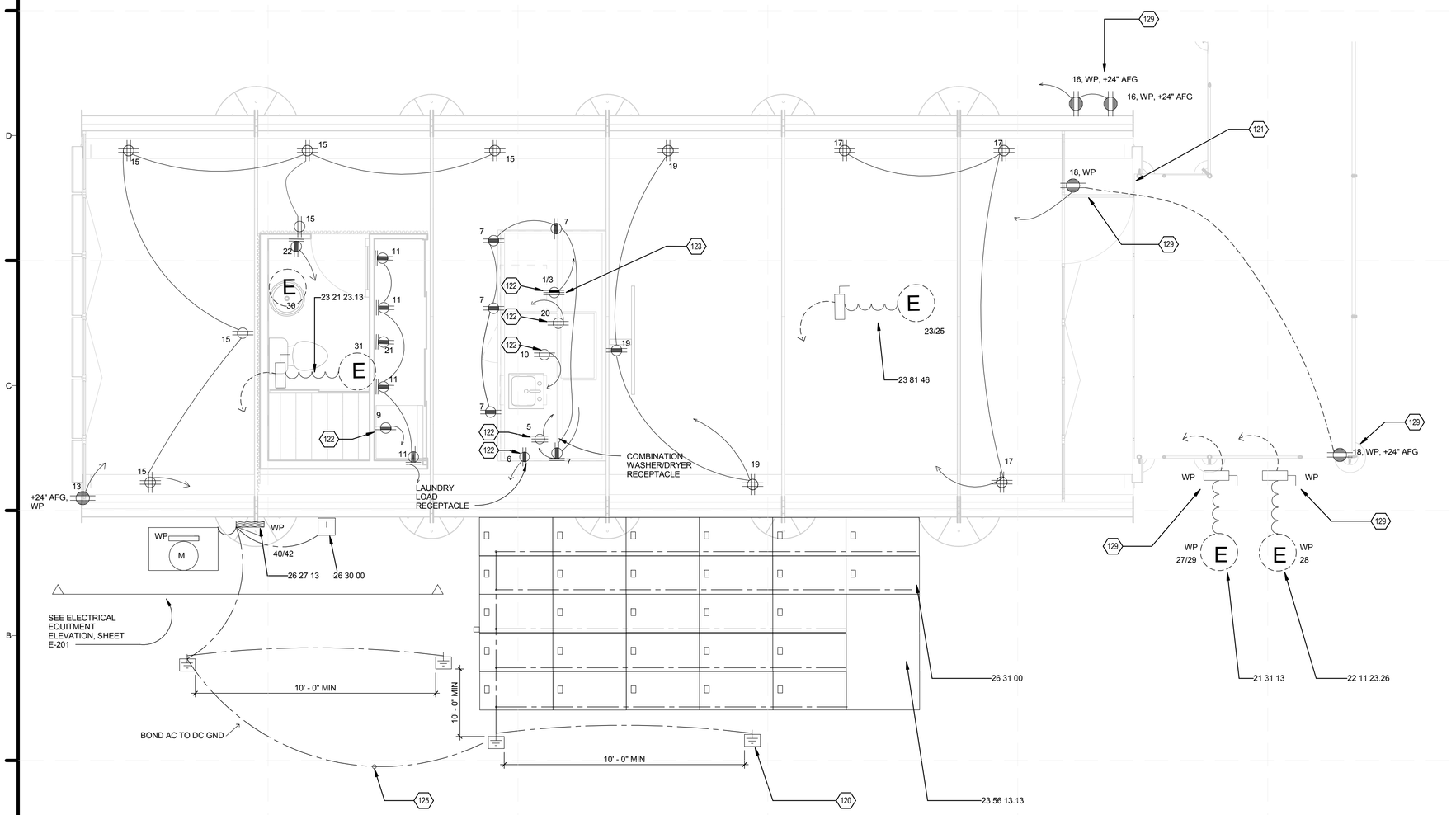

A1 ELECTRICAL DISTRIBUTION PLAN

3/8" = 1'-0"

0 2' 4' 6'

5/8/2011 2:03:39 PM

GENERAL SHEET NOTES

1. THE EXTERIOR RECEPTACLES SHALL BE WEATHER-RESISTANT. NEC 406.8(B)(1).

REFERENCE KEYNOTES

21 31 13	ELECTRIC-DRIVE, CENTRIFUGAL FIRE PUMPS
22 11 23.26	CLOSE-COUPLED, HORIZONTALLY MOUNTED, IN-LINE CENTRIFUGAL DOMESTIC-WATER PUMPS
23 21 23.13	IN-LINE CENTRIFUGAL HYDRONIC PUMPS
23 56 13.13	HEATING SOLAR FLAT-PLATE COLLECTORS
23 81 46	WATER-SOURCE UNITARY HEAT PUMPS
26 27 13	ELECTRICITY METERING
26 30 00	FACILITY ELECTRICAL POWER GENERATING AND STORING EQUIPMENT
26 31 00	PHOTOVOLTAIC COLLECTORS

SHEET KEYNOTES

120	COPPER GROUNDING ELECTRO PLATE (12" SQ X 1/4" T) AND 20 1/4" L GROUND ROD. CENTER GROUND ROD IN PLATE AND BOND TO PLATE WITH 2" OF GROUND ROD EXTENDING ABOVE PLATE BY EXOTHERMIC MEANS. BURY 18" GROUND ROD, TYPICAL
121	BOND RAMP/DECK STRUCTURE TO BLDG STRUCTURE WITH #4 C.U. BRAIDED STRAP
122	MOUNT RECEPTACLE UNDER COUNTER
123	MOUNT RECEPTACLE UNDER COUNTER, LOCATE WITHIN 18" OF RANGE
125	BURIED #4 B.C. GROUND WIRE, 18" DEEP, BOND TO PLATE BY EXOTHERMIC MEANS, TYPICAL
129	MOUNT TO STRUCTURAL SUPPORT, TYPICAL

teamhawai'i

halepilihonua

TEAM NAME: UNIVERSITY OF HAWAII (TEAM HAWAII)

ADDRESS: UNIVERSITY OF HAWAI'I AT MĀNOA
2410 CAMPUS ROAD
HONOLULU, HI 96822

CONTACT: ROCKWOOD@ARCH.HAWAII.EDU
WWW.SOLAR.HAWAII.EDU

CONSULTANTS

ARCHITECTURE:

ENGINEERS:

LANDSCAPING:

CODE CONSULTANTS:

CLIENT

U.S. DEPARTMENT OF ENERGY

SOLAR DECATHLON 2011

WWW.SOLARDECATHLON.GOV

U.S. DEPARTMENT OF ENERGY SOLAR DECATHLON

MARK	DATE	DESCRIPTION

LOT NUMBER:	306
DRAWN BY:	UNIVERSITY OF HAWAI'I
CHECKED BY:	RON HO AND ASSOCIATES
COPYRIGHT:	UNIVERSITY OF HAWAI'I SCHOOL OF ARCHITECTURE

SHEET TITLE

ELECTRICAL DISTRIBUTION PLAN

E-101

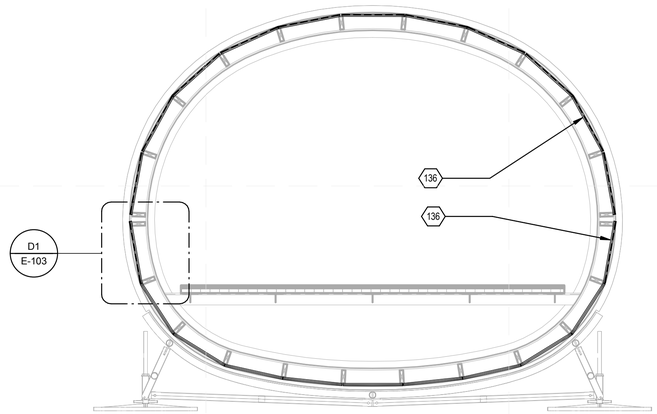

D1 LIGHTING SECTION

3/8" = 1'-0"

0 2' 4' 6'

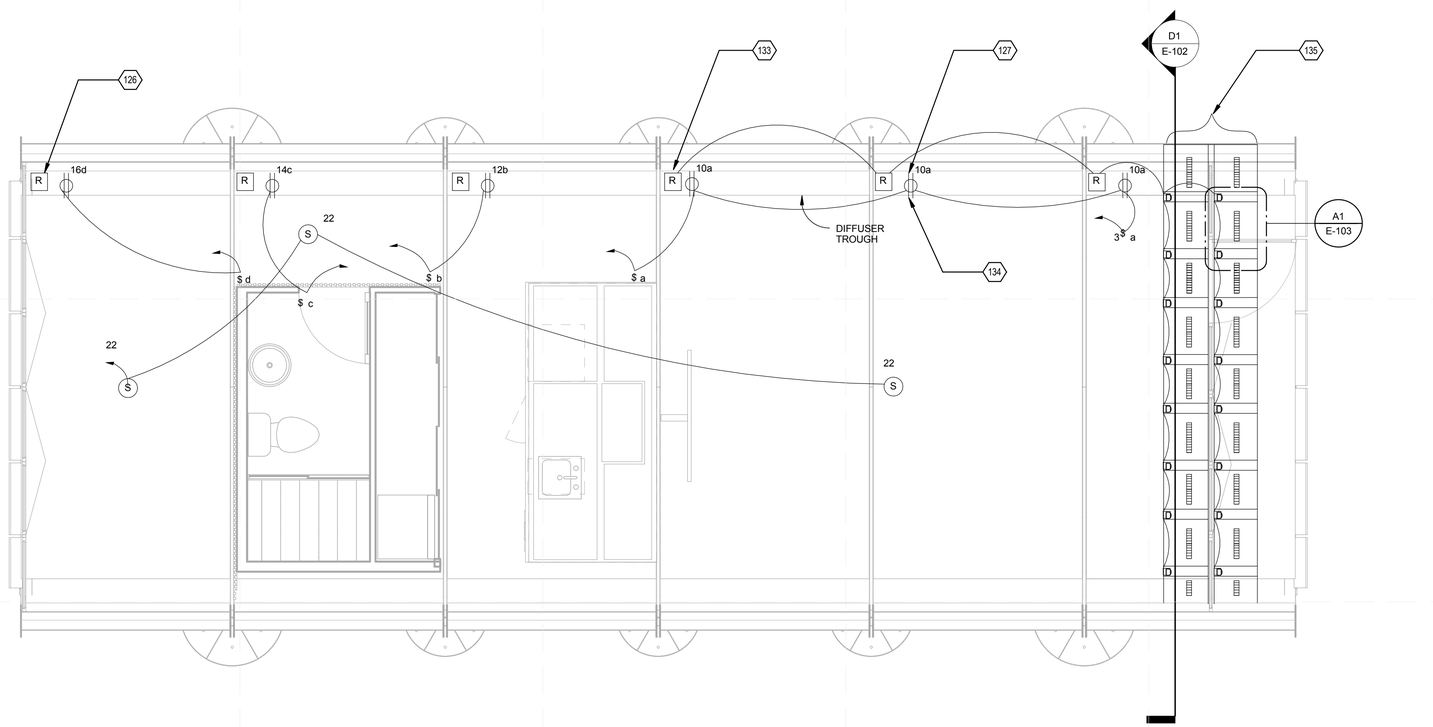

A1 LIGHTING PLAN

3/8" = 1'-0"

0 2' 4' 6'

GENERAL SHEET NOTES

REFERENCE KEYNOTES

SHEET KEYNOTES

126	EACH RECTIFIER BOX IS CONNECTED BY 10 AMG WIRE
127	MOUNT VERTICALLY IN DIFFUSER TROUGH
133	REMOVEABLE RECTIFIER BOX, PLUG CONNECTED, TYPICAL
134	MOUNT INSIDE FLOOR TROUGH, TYPICAL
135	SAMPLE OF LED LIGHT INSTALLATIONS REQUIRED IN EACH SUBSHELL PANEL, NOT ALL SHOWN, SEE DETAILS ON SHEET E-103
136	REMOVEABLE FRP PANELS, ACCESSIBLE FROM THE INTERIOR FRP PANEL, TYPICAL

teamhawai'i

halepilihonua

TEAM NAME: UNIVERSITY OF HAWAII (TEAM HAWAII)

ADDRESS: UNIVERSITY OF HAWAI'I AT MĀNOA
2410 CAMPUS ROAD
HONOLULU, HI 96822

CONTACT: ROCKWOOD@ARCH.HAWAII.EDU
WWW.SOLAR.HAWAII.EDU

CONSULTANTS

ARCHITECTURE:

ENGINEERS:

LANDSCAPING:

CODE CONSULTANTS:

CLIENT

U.S. DEPARTMENT OF ENERGY

SOLAR DECATHLON 2011

WWW.SOLARDECATHLON.GOV

U.S. DEPARTMENT OF ENERGY SOLAR DECATHLON

MARK	DATE	DESCRIPTION

LOT NUMBER:	306
DRAWN BY:	UNIVERSITY OF HAWAI'I
CHECKED BY:	RON HO AND ASSOCIATES
COPYRIGHT:	UNIVERSITY OF HAWAI'I SCHOOL OF ARCHITECTURE

SHEET TITLE

LIGHTING PLAN

E-102

5/9/2011 2:03:49 PM

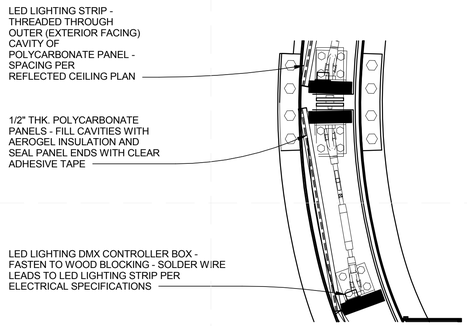

D1 ENLARGED SUBSHELL PANEL CROSS SECTION

1/4" = 1'-0"

0 2' 4' 8'

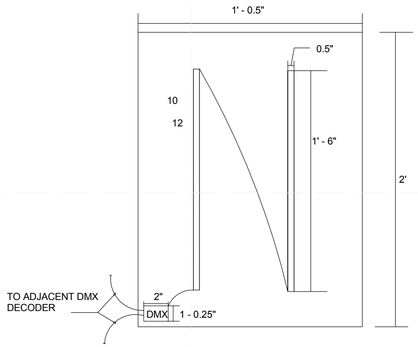

NOTE:

1. Each subshell contains 13 panel sections between the wall cavity.
2. Each panel section contains two 18" LED strips and is controlled by a dedicated DMX decoders.
3. The DMX decoders shall be daisy chained together.
4. One rectifier box per shell to power (65) DMX decoders and 130 LED strips.
5. All DMX decoders and rectifier boxes shall be accessible.

A1 SUBSHELL PANEL LED DETAIL

NTS

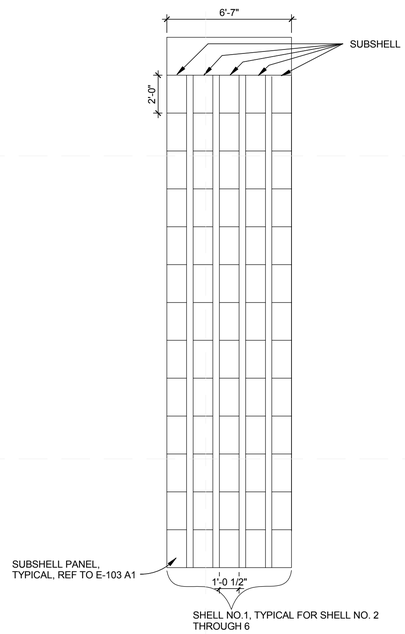

A4 SHELL-SUBSHELL CROSS SECTION

NTS

GENERAL SHEET NOTES

REFERENCE KEYNOTES

SHEET KEYNOTES

teamhawai'i

halepilihonua

TEAM NAME:	UNIVERSITY OF HAWAII (TEAM HAWAII)
ADDRESS:	UNIVERSITY OF HAWAI'I AT MĀNOA 2410 CAMPUS ROAD HONOLULU, HI 96822
CONTACT:	ROCKWOOD@ARCH.HAWAII.EDU WWW.SOLAR.HAWAII.EDU

CONSULTANTS

ARCHITECTURE:

ENGINEERS:

LANDSCAPING:

CODE CONSULTANTS:

CLIENT

U.S. DEPARTMENT OF ENERGY

SOLAR DECATHLON 2011

WWW.SOLARDECATHLON.GOV

U.S. DEPARTMENT OF ENERGY SOLAR DECATHLON

MARK	DATE	DESCRIPTION

LOT NUMBER:	306
DRAWN BY:	UNIVERSITY OF HAWAI'I
CHECKED BY:	RON HO AND ASSOCIATES
COPYRIGHT:	UNIVERSITY OF HAWAI'I SCHOOL OF ARCHITECTURE

SHEET TITLE

LIGHTING DETAILS

E-103

5/8/2011 2:03:54 PM

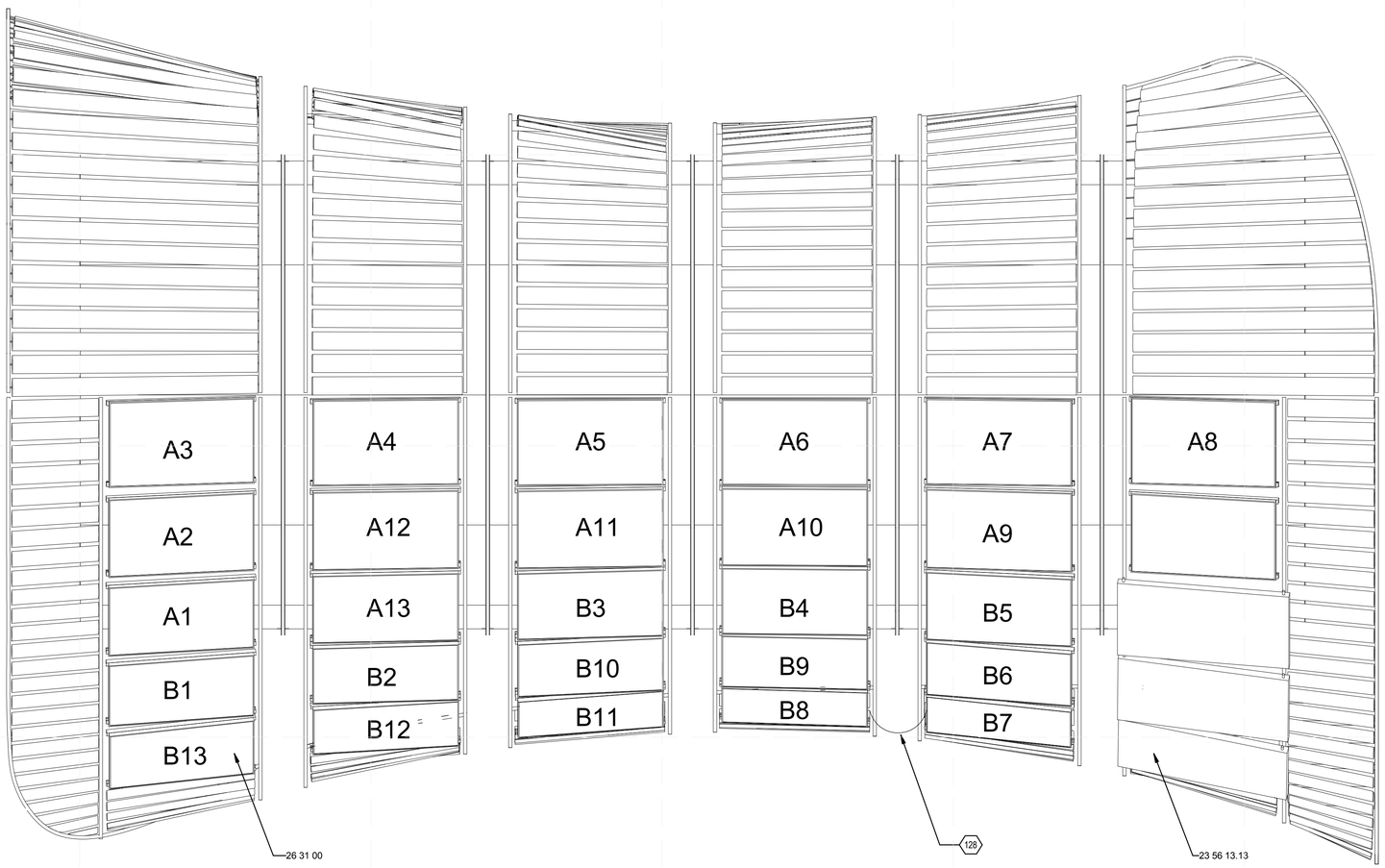

A1 PV ROOF PLAN
3/8" = 1'-0"

0 2' 4' 6'

GENERAL SHEET NOTES

REFERENCE KEYNOTES

23 56 13.13	HEATING SOLAR FLAT-PLATE COLLECTORS
26 31 00	PHOTOVOLTAIC COLLECTORS

SHEET KEYNOTES

128	PROVIDE FIELD CONNECTORS CONNECT AFTER ASSEMBLY

teamhawai'i

halepilihonua

TEAM NAME: UNIVERSITY OF HAWAII (TEAM HAWAII)

ADDRESS: UNIVERSITY OF HAWAI'I AT MĀNOA
2410 CAMPUS ROAD
HONOLULU, HI 96822

CONTACT: ROCKWOOD@ARCH.HAWAII.EDU
WWW.SOLAR.HAWAII.EDU

CONSULTANTS

ARCHITECTURE:

ENGINEERS:

LANDSCAPING:

CODE CONSULTANTS:

CLIENT

U.S. DEPARTMENT OF ENERGY

SOLAR DECATHLON 2011

WWW.SOLARDECATHLON.GOV

U.S. DEPARTMENT OF ENERGY SOLAR DECATHLON

MARK	DATE	DESCRIPTION

LOT NUMBER:	306
DRAWN BY:	UNIVERSITY OF HAWAI'I
CHECKED BY:	RON HO AND ASSOCIATES
COPYRIGHT:	UNIVERSITY OF HAWAI'I SCHOOL OF ARCHITECTURE

SHEET TITLE

PV ROOF PLAN

E-104

5/8/2011 2:04:06 PM

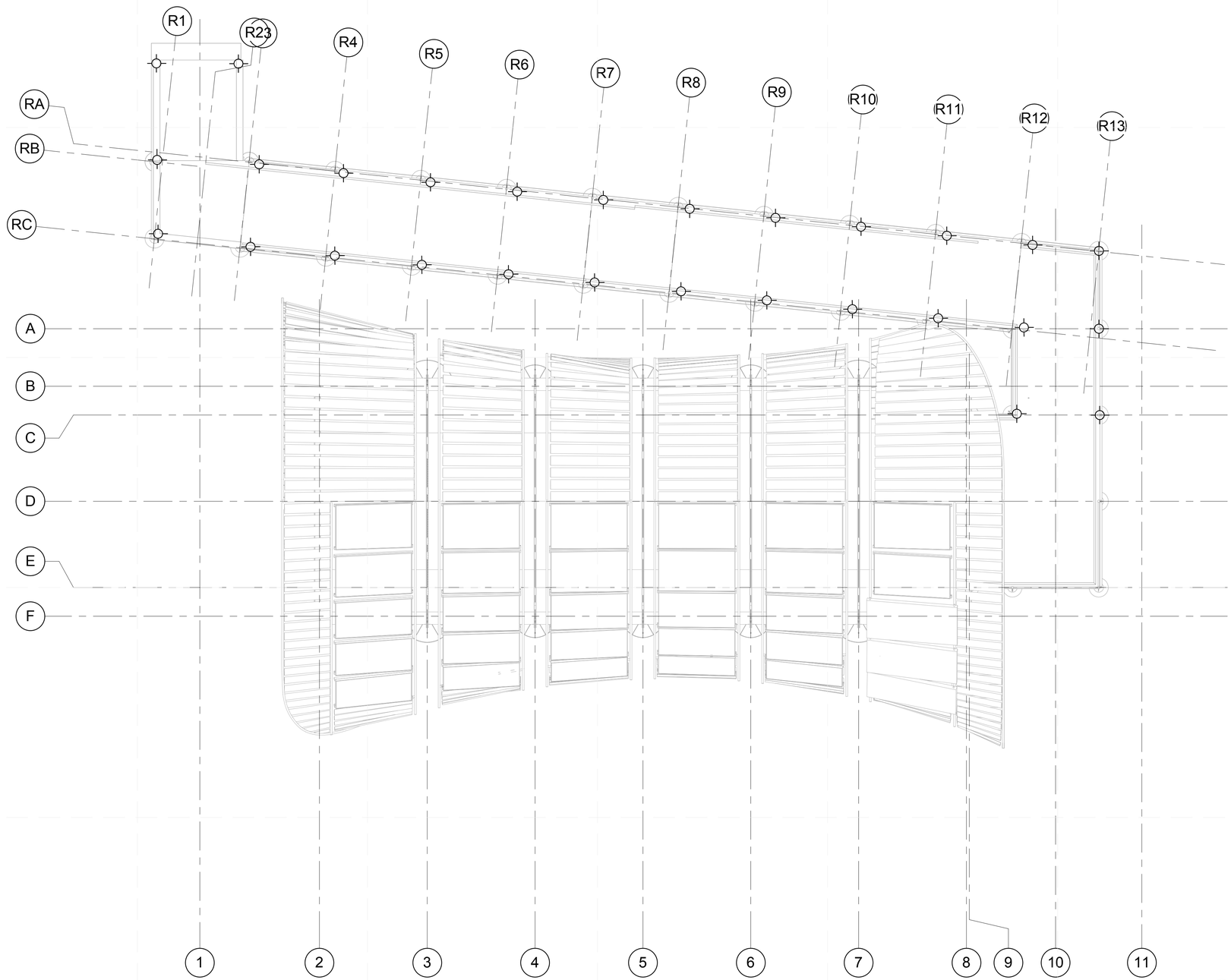

A1 RAMP LIGHTING PLAN
1/4" = 1'-0"

0 2' 4' 8'

5/8/2011 2:04:22 PM

GENERAL SHEET NOTES

LED LAMP RAMP LIGHTING BATTERY CALCULATIONS

1 LED LAMP LIGHT ENERGY = 952 JOULES =0.26 Wh

TOTAL FOR 29 LED RAMP LIGHTS = 0.754 Wh

REFERENCE KEYNOTES

SHEET KEYNOTES

teamhawai'i

halepilihonua

TEAM NAME:	UNIVERSITY OF HAWAII (TEAM HAWAII)
ADDRESS:	UNIVERSITY OF HAWAI'I AT MĀNOA 2410 CAMPUS ROAD HONOLULU, HI 96822
CONTACT:	ROCKWOOD@ARCH.HAWAII.EDU WWW.SOLAR.HAWAII.EDU

CONSULTANTS

ARCHITECTURE:

ENGINEERS:

LANDSCAPING:

CODE CONSULTANTS:

CLIENT

U.S. DEPARTMENT OF ENERGY

SOLAR DECATHLON 2011

WWW.SOLARDECATHLON.GOV

U.S. DEPARTMENT OF ENERGY SOLAR DECATHLON

MARK	DATE	DESCRIPTION

LOT NUMBER:	306
DRAWN BY:	UNIVERSITY OF HAWAI'I
CHECKED BY:	RON HO AND ASSOCIATES
COPYRIGHT:	UNIVERSITY OF HAWAI'I SCHOOL OF ARCHITECTURE

SHEET TITLE

RAMP LIGHTING PLAN

E-106

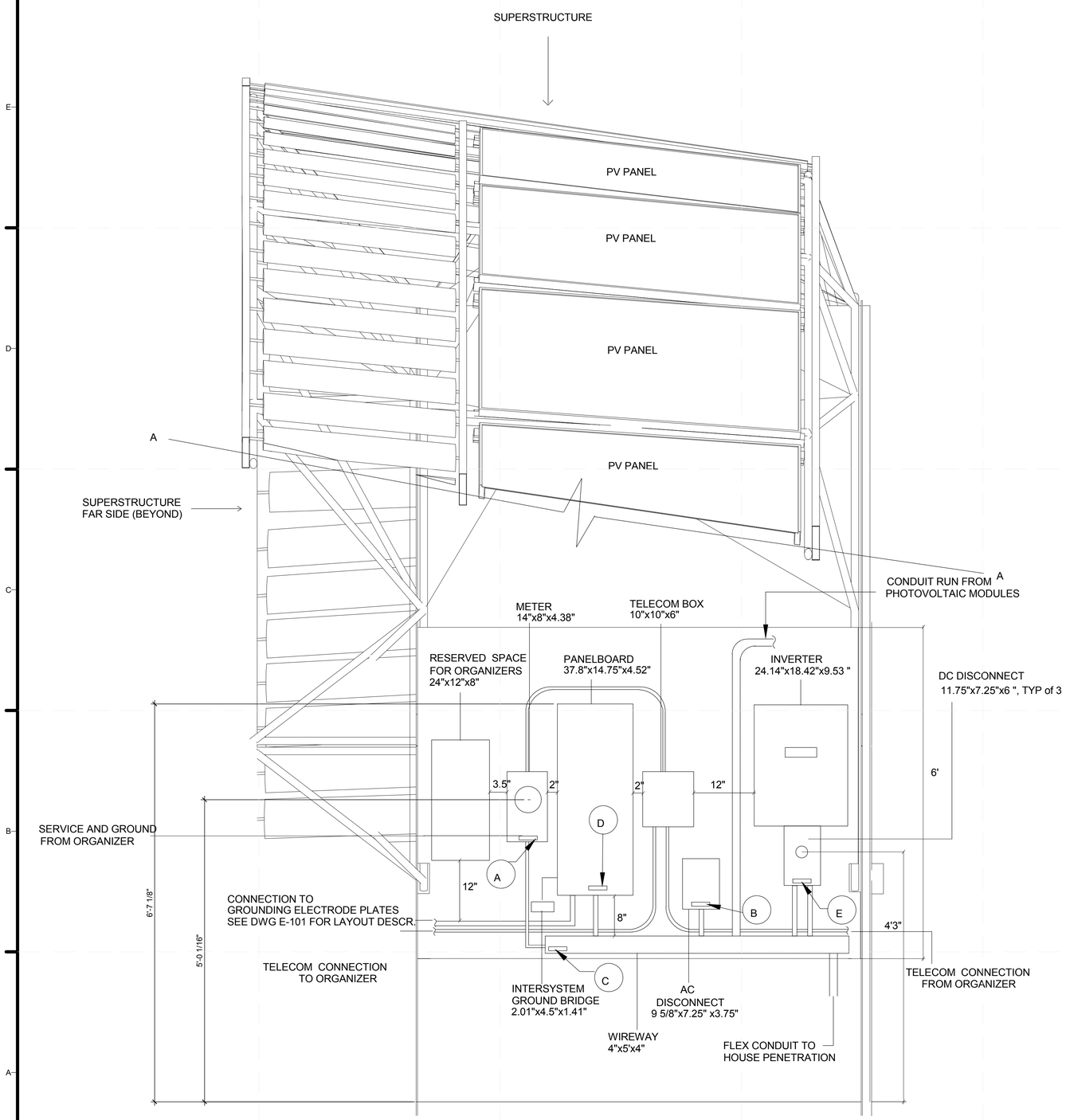

1 ELECTRICAL EQUIPMENT ELEVATION

1" = 1'-0"

0 1/2" 1' 2'

POWER DISTRIBUTION LABELS (NTS)

4"

A (1 1/4")

INTERACTIVE PHOTOVOLTAIC POWER F0LLOWING THROUGH THIS METER

RATED AC OUTPUT CURRENT	30.6 A
NOMINAL OPERATION AC VOLTAGE	240V

B (1/2")

PHOTOVOLTAIC SYSTEM
AC DISCONNECT

C (1/2")

INTERACTIVE PHOTOVOLTAIC POWER
RUNNING THROUGH THIS WIRE WAY

E (1 1/2")

PHOTOVOLTAIC DC DISCONNECT
INVERTER A

OPERATING CURRENT	8.07A
OPERATING VOLTAGE	337.5V
SHORT CIRCUIT CURRENT	8.58A
MAXIMUM SYSTEM VOLTAGE	371.25V

D (1 1/2")

PANELBOARD
U.L. LISTED SERVICE ENTRANCE EQUIPMENT

CURRENT RATING	225A
VOLTAGE RATING	120/240V
1 PHASE, 3W, 3-WIRE	

GENERAL SHEET NOTES

REFERENCE KEYNOTES

SHEET KEYNOTES

teamhawai'i

halepilihonua

TEAM NAME:	UNIVERSITY OF HAWAII (TEAM HAWAII)
ADDRESS:	UNIVERSITY OF HAWAI'I AT MĀNOA 2410 CAMPUS ROAD HONOLULU, HI 96822
CONTACT:	ROCKWOOD@ARCH.HAWAII.EDU WWW.SOLAR.HAWAII.EDU

CONSULTANTS

ARCHITECTURE:

ENGINEERS:

LANDSCAPING:

CODE CONSULTANTS:

CLIENT

U.S. DEPARTMENT OF ENERGY

SOLAR DECATHLON 2011

WWW.SOLARDECATHLON.GOV

U.S. DEPARTMENT OF ENERGY SOLAR DECATHLON

MARK	DATE	DESCRIPTION

LOT NUMBER:	306
DRAWN BY:	UNIVERSITY OF HAWAI'I
CHECKED BY:	RON HO AND ASSOCIATES
COPYRIGHT:	UNIVERSITY OF HAWAI'I SCHOOL OF ARCHITECTURE

SHEET TITLE

ELECTRICAL EQUIPMENT ELEVATIONS

E-201

5/8/2011 2:04:28 PM

PRODUCT SPECIFICATIONS	
INVERTERS	1 SUNNY BOY 6000W (SB 6000-US) EGUAGE MONITORING INCLUDED
MODULES	26 SAMSUNG LPC244SM 244W (STC)
SYSTEM SIZE	6.34 kW (STC)

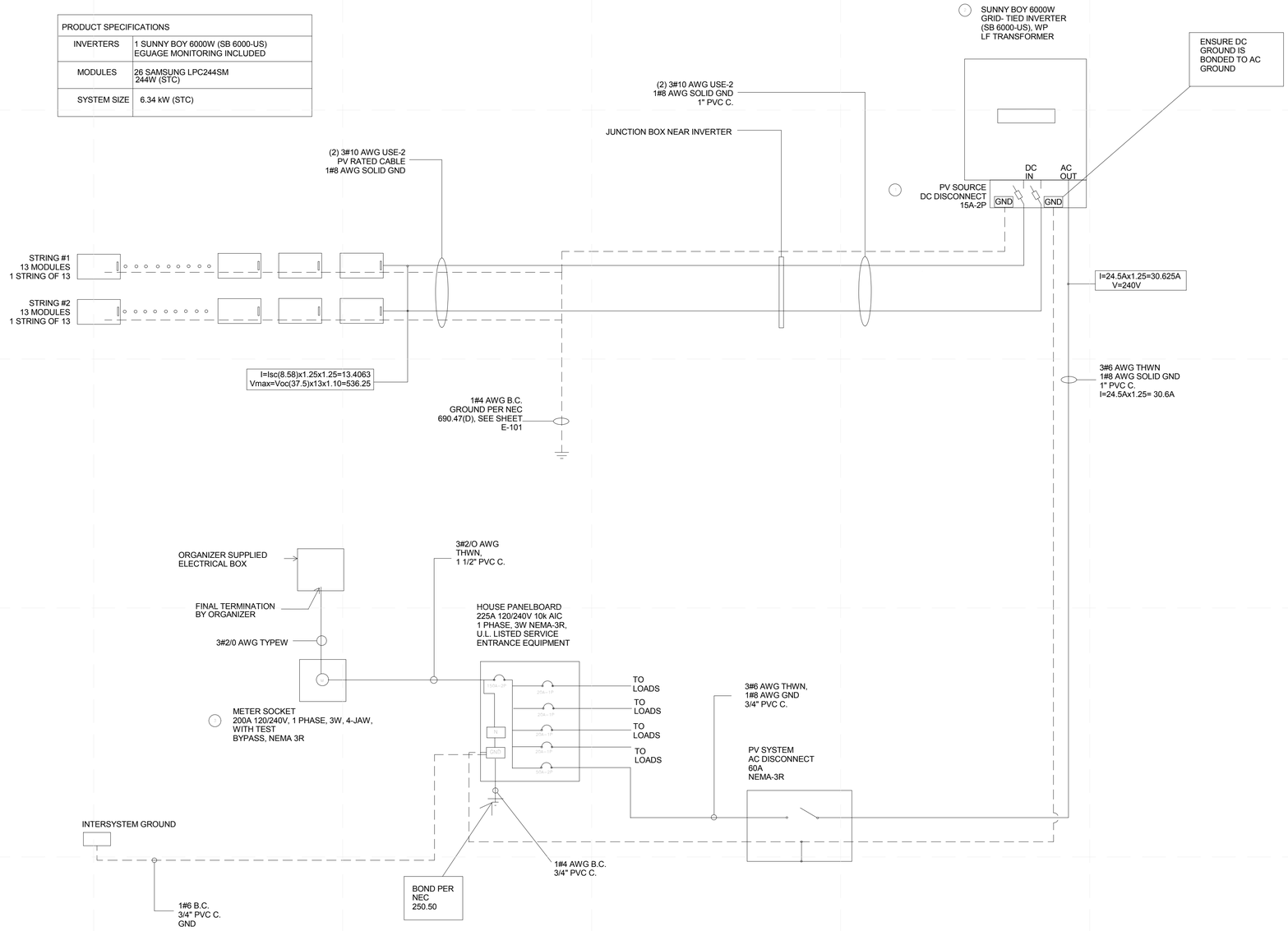

A1 PV ONE-LINE DIAGRAM
NTS

GENERAL SHEET NOTES

REFERENCE KEYNOTES

SHEET KEYNOTES

NOTES

1. PER NEC ARTICLE 690.17: CONTRACTOR TO MOUNT WARNING SIGN ON OR ADJACENT TO THE DISCONNECTING MEANS. THE SIGN SHALL BE CLEARLY LEGIBLE HAVE THE FOLLOWING WORDS OR EQUIVALENT. "WARNING ELECTRIC SHOCK HAZARD. DO NOT TOCH TERMINALS. TERMINALS ON BOTH THE LINE AND LOAD SIDES MAY BE ENERGIZED IN THE OPEN POSITION."
2. PER ARTICLE 690.53: CONTRACTOR SHALL PROVIDE MARKING FOR THE DC PV POWER SOURCE INDICATING THE FOLLOWING:
   1. OPERATING CURRENT
   2. OPERATING VOLTAGE
   3. MAXIMUM SYSTEM VOLTAGE
   4. SHORT-CIRCUIT CURRENT

   MARKINGS SHALL BE LOCATED AT AN ACCESSIBLE LOCATION AT THE DISCONNECTING MEANS FOR THE POWER SOURCE.
3. PER NEC ARTICLE 690.54: AT THE POINT OF INTERCONNECTION WITH THE UTILITY SOURCE THE CONTRACTOR SHALL PROVIDE MARKING AT AN ACCESSIBLE LOCATION

teamhawai'i
halepilihonua

TEAM NAME: UNIVERSITY OF HAWAII (TEAM HAWAII)
ADDRESS: UNIVERSITY OF HAWAI'I AT MĀNOA
2410 CAMPUS ROAD
HONOLULU, HI 96822
CONTACT: ROCKWOOD@ARCH.HAWAII.EDU
WWW.SOLAR.HAWAII.EDU

CONSULTANTS
ARCHITECTURE:
ENGINEERS:
LANDSCAPING:
CODE CONSULTANTS:

CLIENT
U.S. DEPARTMENT OF ENERGY
SOLAR DECATHLON 2011
WWW.SOLARDECATHLON.GOV

U.S. DEPARTMENT OF ENERGY SOLAR DECATHLON

MARK	DATE	DESCRIPTION

LOT NUMBER:	306
DRAWN BY:	UNIVERSITY OF HAWAI'I
CHECKED BY:	RON HO AND ASSOCIATES
COPYRIGHT:	UNIVERSITY OF HAWAI'I SCHOOL OF ARCHITECTURE

SHEET TITLE
PV ONE-LINE DIAGRAM

E-601

5/9/2011 2:04:32 PM

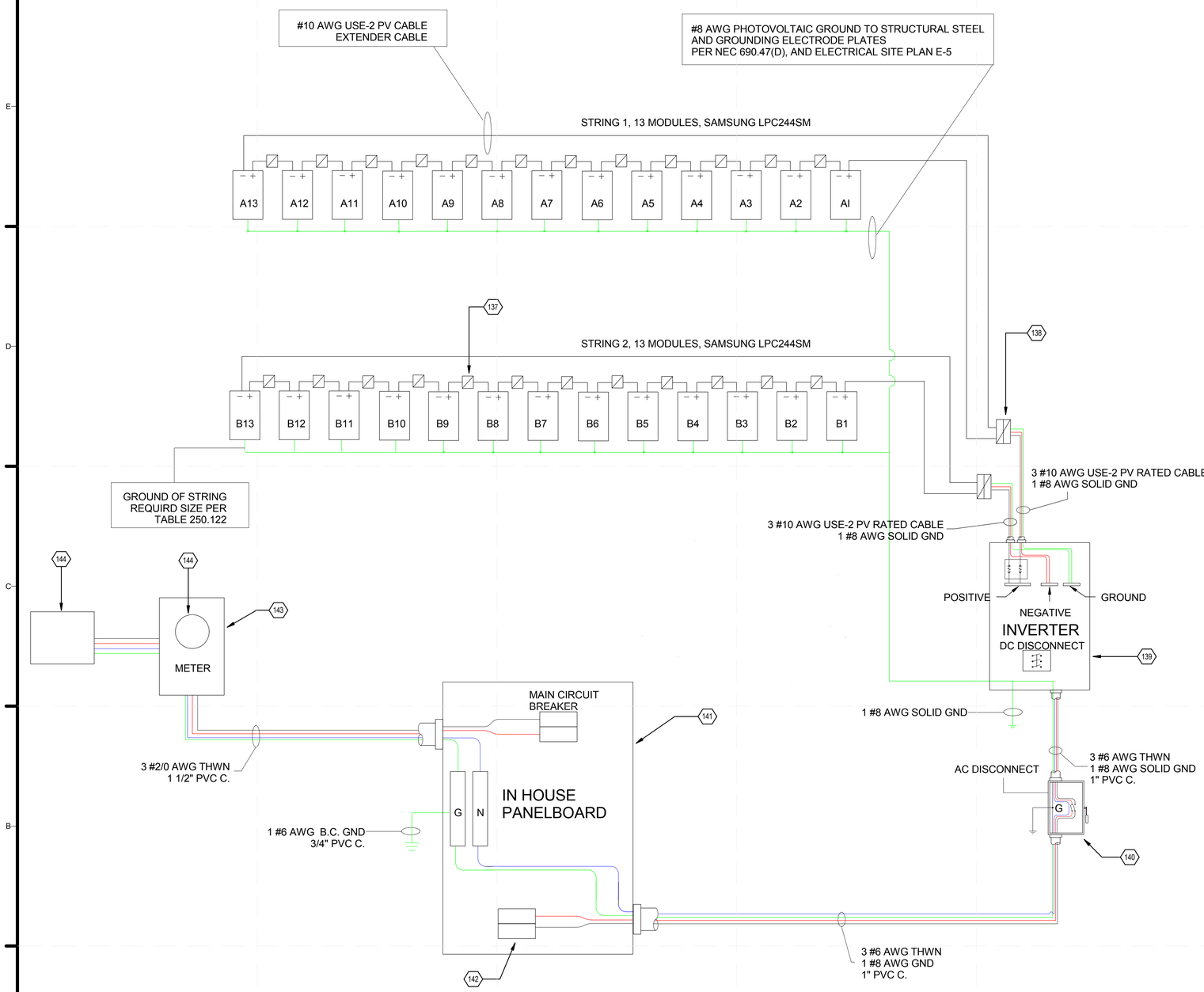

A1 PV THREE LINE DIAGRAM
1" = 1'-0"

D.C. CALCULATIONS

STRING 1.
PV STRING TO INVERTER:
A.
(ISC OF MODULES)(1.25)(1.25)
I=(8.58AMPS)(1.25)(1.25)= 13.4063 AMPS

B.
VDI= (AMPS * FEET)/(2% * VOLTAGE)
(13.4063)(150)/(2*(13*37.5))= 2.0625 V

C.
PER TABLE 310.16
90 DEG C. RATED CABLE
10 AWG = 40
61-70 DEG C CORRECTION FACTOR = 0.58
CORRECTED FACTOR= 23.2
(GREATER THAN 13.4063 AMPS)

REQUIRED CABLE:
10 AWG USE-2 COPPER

REQUIRED INVERTER FUSE:
15 AMPS

STRING 2.
PV STRING TO INVERTER:
A.
(ISC OF MODULES)(1.25)(1.25)
I=(8.58AMPS)(1.25)(1.25)= 13.4063 AMPS

B.
VDI= (AMPS * FEET)/(2% * VOLTAGE)
(13.4063)(150)/(2*(13*37.5))= 2.0625 V

C.
PER TABLE 310.16
90 DEG C. RATED CABLE
10 AWG = 40
61-70 DEG C CORRECTION FACTOR = 0.58
CORRECTED FACTOR= 23.2
(GREATER THAN 13.4063 AMPS)

REQUIRED CABLE:
10 AWG USE-2 COPPER

REQUIRED INVERTER FUSE:
15 AMPS

DC STRING VOC AT COLDEST EXPECTED
OPERATING TEMPERTATURE.

INVERTER 1:
STRING VOC = (37.5 V * 13 PANELS) = 487.5 V
CORRECTION FACTOR FOR TEMPERATURES OF -4DEG
F THROUGH 4 DEG F
=1.18 * STRING VOC
= 575.25(LESS THAN MAXIMUM INVERTER INPUT OF 600V)

*DC OVERCURRENT PROTECTION IS PROVIDED BY
BUSS FUSSES AT INVERTER, FUSES ARE SIZED
ABOVE TOTAL CURRENT FOR MODULE STRING
AMPERAGE. DC DISCONNECT IS LOCATED ON FACE
OF INVERTER PANNELS.
* STC VALUE OF 30% WAS CHOSEN FOR
PHOTOVOLTAIC MODULE

AC CALCULATIONS

INVERTER 1.
A.
(MAX OUTPUT CURRENT) (1.25)= NEC REQUIRED AMPS
(24.5 AMPS)(1.25)= 30.625 AMPS
6 AWG CABLE REQUIRED IN PVC CONDUIT
REQUIRED BACKFED BREAKER SIZE: 50 AMP
* VOLTAGE DROP IS NEGLIGIBLE

TEMPERATURE OPERATION IN CONDUIT INVERTER 1
PER TABLE 310.16
75 DEG C. RATED CABLE
6 AWG = 65
(GREATER THAN 30.625 AMPS)

GROUNDING CALCULATIONS

DC GROUND CALCULATIONS:
250.166 SIZE OF THE DIRECT-CURRENT GROUNDING
ELECTRODE CONDUCTOR.

(B) NOT SMALLER THAN THE LARGEST CONDUCTOR.
WHERE THE DC SYSTEM IS OTHER THAN AS IN 250.166 (A)
(5) OR (A) (7), THAT PORTION OF THE GROUNDING
ELECTRODE CONDUCTOR SHALL NOT BE SMALLER THAN
THE LARGEST CONDUCTOR SUPPLIED BY THE SYSTEM,
BUT NOT SMALLER THAN 8 AWG COPPER, OR 6 AWG
ALUMINUM

DC GROUND CONDUCTOR SIZE=8 AWG

AC GROUND CALCULATIONS:
PER TABLE 250.66, FOR A GROUND ELECTRODE OF 2 OR
SMALLER, THE SPECIFIED CONDUCTOR SIZE IS 8 AWG

*GROUND CABLE SHALL BE BOUNDED TO ELECTRODE
GROUNDING PLATE BY EXOTHERMIC WELD

GENERAL SHEET NOTES

GENERAL NOTE VALUE GENERAL TEXT

1. ALL PV SYSTEMS WILL BE DESIGNED AND INSTALLED IN FULL COMPLIANCE WITH THE 2008 NATIONAL ELECTRIC CODE (NEC).
2. PV MODULES, SOURCE-CIRCUITT COMBINERS, AND UTILITY INTERACTIVE INVERTERS MUST BE SAFETY CERTIFIED (LISTED) TO THE APPROPRIATE UL STANDARD LISTING (UL 1741 FOR INVERTERS AND COMBINERS, UL 1703 FOR PV MODULES) AND MUST BE TESTED AND CERTIFIED BY ONE OF THE FOLLOWING US NATIONALLY RECOGNIZED TESTING LABORATORIES (NTRL); UL, CSA, ETL, OR TUV RHEINLAND OF NORTH AMERICA. THE EUROPEAN CE DESIGNATON AND TESTS BY LABORATORIES IN OTHER COUNTRIES ARE NOT ACCEPTABLE (690.4).
3. DC CIRCUITS FROM THE PV MODULES TO THE DC PV DISCONNECT MUST BE IN METAL CONDUITS (RACEWAYS/WIREWAYS) WHERE INSIDE THE STRUCTURE (NEC 690.31 (E)).

REFERENCE KEYNOTES

SHEET KEYNOTES

137	MC4 10AWG CONNECTOR
138	MC4 10AWG BRANCH CONNECTOR
139	SUNNY BOY INVERTER (SB 6000-US) LF TRANSFORMER
140	60A AC DISCONNECT
141	225A IN-HOUSE PANEL BOARD
142	50A DUAL POLE BREAKER
143	METER SOCKET
144	EQUIPMENT PROVIDED BY SOLAR DECATHLON ORGANIZERS

THREE LINE LEGEND

- BUNDLED SOLAR PANEL MC4 WIRES
- GROUND
- NEUTRAL
- NEGATIVE
- POSITIVE

teamhawai'i
halepilihonua

TEAM NAME: UNIVERSITY OF HAWAII (TEAM HAWAII)
ADDRESS: UNIVERSITY OF HAWAI'I AT MĀNOA
2410 CAMPUS ROAD
HONOLULU, HI 96822
CONTACT: ROCKWOOD@ARCH.HAWAII.EDU
WWW.SOLAR.HAWAII.EDU

CONSULTANTS
ARCHITECTURE:
ENGINEERS:
LANDSCAPING:
CODE CONSULTANTS:

CLIENT
U.S. DEPARTMENT OF ENERGY
SOLAR DECATHLON 2011
WWW.SOLARDECATHLON.GOV

U.S. DEPARTMENT OF ENERGY
SOLAR DECATHLON

MARK	DATE	DESCRIPTION

LOT NUMBER:	306
DRAWN BY:	UNIVERSITY OF HAWAI'I
CHECKED BY:	RON HO AND ASSOCIATES
COPYRIGHT:	UNIVERSITY OF HAWAI'I SCHOOL OF ARCHITECTURE

SHEET TITLE
THREE-LINE DIAGRAM

E-603

5/8/2011 2:04:37 PM

PANEL "A" SCHEDULE

CKT NO.	DESCRIPTION	CIRCUIT BREAKER POLES	CIRCUIT BREAKER AMPS	CONNECTED LOAD (VA) A	CONNECTED LOAD (VA) B	WIRE SIZE (AWG)	WIRE SIZE (AWG)	CONNECTED LOAD (VA) A	CONNECTED LOAD (VA) B	CIRCUIT BREAKER POLES	CIRCUIT BREAKER AMPS	DESCRIPTION	CKT NO.
1	COOK TOP	2	40	3200		8	12	500		1	15	L-KITCHEN	2
3	COOK TOP	-	-		3200	8	12		1500	1	20	L-LIVING ROOM	4
5	WASHER/DRYER	1	20	1472		12	12	1500		1	20	LAUNDRY/DRYER	6
7	R- SMALL APPLIANCE	1	20		1500	12	12		500	1	20	L-ROOM	8
9	FREEZER	1	15	1725		12	12	396		1	15	REFRIGERATOR	10
11	R - SMALL APPLIANCE	1	20		1500	12	12		500	1	20	L-BATHROOM	12
13	R - OUTDOOR	1	20	180		12	12	360		1	20	SMOKE DETECTORS	14
15	R - ROOM	1	20		1080	12	12		360	1	20	R-RAMP	16
17	R-LIVING AREA	1	20	540		12	12	360		1	20	R-DECK	18
19	R - DINING	1	20		540	12	12		1100	1	15	DISHWASHER	20
21	MICROWAVE	1	15	1500		12	12	180		1	20	R - BATHROOM GFCI **	22
23	HVAC HEAT PUMP	2	30		1440	10	12		1900	1	20	THERMAL TANK*	24
25	HVAC HEAT PUMP	-	-	1440		10	12	1900		-	-	THERMAL TANK*	26
27	FIREPUMP	2	15		1150	12	12		1000	1	20	WATER PUMP	28
29	FIREPUMP	-	-	1150		12	12	32		1	15	FAN VENT	30
31	BOOSTER PUMP	1	20		1560	12						SPARE	32
33	SPARE											SPARE	34
35	SPARE											SPARE	36
37	SPARE											SPARE	38
39	SPARE									2	60	PV ***	40
41	SPARE									2	60	PV ***	42
TOTAL WATTS:		PHASE A		11207				5228					
		PHASE B			11970				6860				
TOTAL CONNECTED LOAD (VA):			35265									TOTAL CONNECTED LOAD (AMPS):	147

* - INDICATES TO PROVIDE A LOCKING HANDLE BREAKER

** - INDICATES TO PROVIDE GFCI BREAKER

*** - INDICATES BREAKER LOCATION PER NEC 690.64(B)(7)

GENERAL LOAD CALCULATIONS

GENERAL LIGHTING LOAD: 648 SQFT AT 3 VA PER SQFT = 1944 VA

MINIMUM NUMBER OF BRANCH CIRCUITS
GENERAL LIGHTING LOAD: 1944 VA / 120 V = 16.2 A
THIS REQUIRES TWO 15A, 2-WIRE OR TWO 20A, 2-WIRE CIRCUITS.
SMALL APPLIANCE LOAD: TWO 2-WIRE, 20A CIRCUITS
LAUNDRY LOAD: ONE 2-WIRE, 20A CIRCUIT
BATHROOM BRANCH CIRCUIT: ONE 2-WIRE, 20A CIRCUIT

MINIMUM SIZE FEEDER REQUIRED

				ARTICLE
1. LIGHTS:	648 SQFT X 3 VA =	1, 944	VA	220.12
2. SMALL APPLIANCE:	3 X 1500VA =	4, 500	VA	220.52
3. LAUNDRY LOAD :	2 X 1500VA =	3, 000	VA	220.54
	TOTAL	9, 727.5	VA	
	4500 VA AT 100%	4, 500	VA	
	9, 727.5 VA - 4,500 VA = 5, 227.5 VA AT 35%	1, 830	VA	
4. GENERAL OUTLETS:	14 @ 180 VA	2, 520	VA	220.14
	TOTAL NET LOAD	8, 850	VA	
5. RANGE:		4, 800	VA	220.55
6. WASHER/DRYER LOAD:		5, 000	VA	220.55
7. HEAT PUMP:		2, 880	VA	220.82 (C)
8. HVAC EQUIPMENT:		2, 592	VA	
9. FIRE PUMP:		2, 300	VA	
	NET CALCULATED LOAD	26, 422	VA	

26, 422 VA / 240 V = 110 A

CALCULATION FOR GENERAL LOAD NEUTRAL FOR FEEDER AND SERVICE

LIGHTING AND SMALL APPLIANCE LOAD		6, 444	VA
RANGE: 4800 VA AT 70%		3, 360 VA	220.61
DRYER:		1, 500 VA	220.61
RANGE: 4800 VA AT 70%		3, 600 VA	220.61
	TOTAL	14, 904	VA

CALCULATED LOAD FOR NEUTRAL
14, 904 VA / 240V = 62 A

	LINE A	NEUTRAL	LINE B
GENERAL LOAD	110	62	110
HVAC HEAT PUMP	30	21	30
THERMAL WATER HEATER	30	21	30
FIRE PUMP	15	10.5	15
TOTAL AMPERES PER LINE	185	114.5	185

GENERAL SHEET NOTES

REFERENCE KEYNOTES

SHEET KEYNOTES

teamhawai'i
halepilihonua

TEAM NAME: UNIVERSITY OF HAWAII (TEAM HAWAII)
ADDRESS: UNIVERSITY OF HAWAI'I AT MĀNOA
2410 CAMPUS ROAD
HONOLULU, HI 96822
CONTACT: ROCKWOOD@ARCH.HAWAII.EDU
WWW.SOLAR.HAWAII.EDU

CONSULTANTS
ARCHITECTURE:
ENGINEERS:
LANDSCAPING:
CODE CONSULTANTS:

CLIENT
U.S. DEPARTMENT OF ENERGY
SOLAR DECATHLON 2011
WWW.SOLARDECATHLON.GOV

U.S. DEPARTMENT OF ENERGY
SOLAR DECATHLON

MARK	DATE	DESCRIPTION

LOT NUMBER: 306
DRAWN BY: UNIVERSITY OF HAWAI'I
CHECKED BY: RON HO AND ASSOCIATES
COPYRIGHT: UNIVERSITY OF HAWAI'I
SCHOOL OF ARCHITECTURE

SHEET TITLE
PANEL SCHEDULES

E-604

5/6/2011 2:04:42 PM

ELECTRICAL EQUIPMENT SCHEDULE		
DESCRIPTION/MODEL	MANUFACTURER	QTY
SAMSUNG LPC244SM	SAMSUNG	27
SUNNY BOY 3000W INVERTER	SMA	3
200 AMP LOAD CENTER, NEMA 3R, QO130M200RB	SQUARE D	1
AC DISCONNECT SWITCH SAFETY 60A, NEMA 3R, DU322RB	SQUARE D	1
METER SOCKET, UATRS202B, 200A	SQUARE D	1
JUNCTION BOX (4X4X4), NEMA 3R, RSC040404	GRAINGER	1
INVERTER PANELBOARD LOAD CENTER, 100A, QO816L100RB	GRAINGER	1
INTERSYSTEM GROUND, LT1476	ERITECH	1
50A 2P CIRCUIT BREAKER, QO250	SQUARE D	1
150A 2P CIRCUIT BREAKER, QO150	SQUARE D	1
60A 1P CIRCUIT BREAKER, QO160	SQUARE D	1
EGAUGE	EGAUGE INC.	1
MEGAPLUG ETHERNET ADAPTER	ACTIONTEC	1
ARDUINO UNO	ARDUINO	6
ARDUINO WISHIELD	ARDUINO	6
PHIHONG RPSA05R-033-R W/ US PLUG RPA-R	PHIHONG	6
ARDUINO PROJECT ENCLOSURE	ARDUINO	6
AMERICAN ELECTRICAL TS3575SL DIN RAIL	AMERICAN ELECTRICAL	1
MAGNECRAFT 35MM DIN-RAIL END CLIP	MAGNECRAFT	2
TYCO 27E893 RELAY SOCKET	TYCO	2
TYCO KUL-5A15S-120 LATCHING RELAY	TYCO	2
HAMMOND 1418KA8 PANEL	HAMMOND	1
B00285F22G (MINI 3.5MM MICROPHONE)	ASIN	5
HOSA GPM103(CONNECTOR)	HOSA	5
ALESIS MULTIMIX 16 USB 2.0	ALESIS	5
INFINITE CABLES WP-IN-TRS	INFINITE CABLES INC.	5
WIRED HOME KWHC9 (WALL PLATE)	WIRED HOME	5
KINECT SENSOR FOR XBOX 360	MIRCOSOFT	6
EW2000-NA-ASUS	ASUS	1
MICROSOFT KINECT SENSOR POWER SUPPLY	MICROSOFT	6
USB NETPOWER 8800 OUTLET NETWORK AC POWER CTRLR	NETPOWER	2
CEM DT-1309 LIGHT METER	CEM	2
HI 2550	KATS SCIENTIFIC	2
TRULINK ® WIRELESS USB SUPERBOOSTER EXTENDER KIT	TRULINK	2

LIGHTING SCHEDULE		
DESCRIPTION/MODEL	MANUFACTURER	QTY
XFLS-RGB300 (RGB LIGHT STRIPS)	SUPER BRIGHT LEDS	1000FT
MAKISOLAR SH-130C: SOLAR LED LIGHT	METEOR LIGHTING	29
LC-GT-DMX-TR900-K: WIRELESS DMX TRANSCEIVER	ECO LIGHT LED	30
LC-OL-DMX-D: DMX DECODER/LED DRIVER	ECO LIGHT LED	390

teamhawai'i

halepilihonua

TEAM NAME: UNIVERSITY OF HAWAII (TEAM HAWAII)

ADDRESS: UNIVERSITY OF HAWAI'I AT MĀNOA
2410 CAMPUS ROAD
HONOLULU, HI 96822

CONTACT: ROCKWOOD@ARCH.HAWAII.EDU
WWW.SOLAR.HAWAII.EDU

CONSULTANTS

ARCHITECTURE:

ENGINEERS:

LANDSCAPING:

CODE CONSULTANTS:

CLIENT

U.S. DEPARTMENT OF ENERGY

SOLAR DECATHLON 2011

WWW.SOLARDECATHLON.GOV

U.S. DEPARTMENT OF ENERGY SOLAR DECATHLON

MARK	DATE	DESCRIPTION

LOT NUMBER:	306
DRAWN BY:	UNIVERSITY OF HAWAI'I
CHECKED BY:	RON HO AND ASSOCIATES
COPYRIGHT:	UNIVERSITY OF HAWAI'I SCHOOL OF ARCHITECTURE

SHEET TITLE

ELECTRICAL SCHEDULES

E-605

5/8/2011 2:04:44 PM

GENERAL NOTES:

1. THE CONTRACTOR SHALL COMPLY WITH THE CONSTRUCTION PRACTICES AND REQUIREMENTS OF THE 2008 EDITION OF THE NATIONAL ELECTRIC CODE (NFPA 70), NATIONAL ELECTRICAL SAFETY CODE, AMERICAN ELECTRICIANS HANDBOOK BY CROFT EDISON ELECTRIC INSTITUTE, APPLICABLE INSTALLATION INSTRUCTIONS OF MANUFACTURERS OF EQUIPMENT AND MATERIALS SUPPLIED FOR THE PROJECT, AND ALL ORDINANCES, RULES AND POLICIES OF THE STATE DISTRICT AND COUNTY IN WHICH THE WORK IS TO BE PERFORMED.

2. COORDINATE WITH OTHER TRADES AND CONFIRM THE EXACT EQUIPMENT LOCATIONS AND RATINGS MOUNTING HEIGHTS OF ALL POWER AND LIGHTING DEVICES BEFORE ROUGHING IN.

3. THE CONTRACTOR SHALL PROVIDE ALL JUNCTION AND PULL BOXES REQUIRED FOR THE INSTALLATION OF ELECTRICAL DEVICES AND EQUIPMENT, WHETHER OR NOT SPECIFICALLY INDICATED ON THE PLANS. SIZING OF THESE BOXES SHALL BE PER THE NATIONAL ELECTRICAL CODE.

4. THE CONTRACTOR SHALL FURNISH ALL EQUIPMENT AND CIRCUITING FOR TEMPORARY CONSTRUCTION POWER AS REQUIRED.

5. THE CONTRACTOR SHALL OBTAIN APPROVAL FROM THE ARCHITECT BEFORE MAKING ANY PENETRATIONS THROUGH STRUCTURAL MEMEMBERS OR FIRE RATED WALLS AND SLABS.

6. SHOULD PROJECT CONDITIONS REQUIRE REARRANGMENT OF WORK, THE CONTRACTOR SHALL MARK SUCH CHANGES ON THE AS-BUILT DRAWINGS.

7. THE CONTRACTOR SHALL SUBMIT DRAWINGS IN ACCORDANCE WITH THE CONTRACT DOCUMENTS. TESTING SHALL BE DONE IN ACCORDANCE WITH THE CONTRACT DOCUMENTS.

8. ALL 15A AND 20A RECEPTACLES SHALL BE TAMPER RESISTANT RECEPTACLES.

9. ARC FAULT CIRCUIT INTERRUPTING CIRCUIT BREAKERS SHALL BE PROVIDED FOR ALL 15A AND 20A BRANCH CIRCUITS.

TELECOMMUNICATIONS SYMBOLS:

NOTE: NOT ALL SYMBOLS USED

S	SINGLE POLE SWITCH, WALL MOUNTED +44" UNLESS OTHERWISE NOTED
	DUPLEX RECEPTACLE
	GFCI COUNTERTOP DUPLEX RECEPTACLE, WALL MOUNTED 6" ABOVE COUNTERTOP, OR AS NOTED
	DUPLEX RECEPTACLE - HALF SWITCHED, WALL MOUNTED +INSIDE EDGE WITHIN 8" OF WALL
	GFCI DUPLEX RECEPTACLE, WALL MOUNTED +18" UNLESS OTHERWISE NOTED
	WP-GFCI DUPLEX RECEPTACLE, WALL MOUNTED +18" UNLESS OTHERWISE NOTED
	ELECTRIC DRYER RECEPTACLE, WALL MOUNTED +48" UNLESS OTHERWISE NOTED, NEMA 14-30R
	UNDER COUNTER COOK TOP RECEPTICLE
	DUPLEX RECEPTACLE, FLOOR MOUNTED INSIDE EDGE WITHIN 8" OF WALL
WP	WEATHERPROOF
	TELECOMMUNICATION JACK
	LOAD CENTER
J	JUNCTION BOX
S	SMOKE DETECTOR, HARD-WIRED, INTERCONNECTED
	WIRES IN CONDUIT RUN OUTSIDE
	WIRES IN CONDUIT RUN IN WALL OR CEILING, NM.CU. MAY BE USED SUBJECTED TO LOCAL ORDINANCE
	HOMERUN OF CONDUIT
	GROUNDING PLATE ELECTRODE
M	COMBINATION METER MAIN
D	DMX BOX
I	INVERTER
	GROUND
R	RECTIFIER BOX
	MICROPHONE
	KINECT CAMERA
	AUDIO INTERFACE & MIXER BOX
	AC DISCONNECT
	LIGHT SENSOR
	REMOTE POWER CONTROL
S	pH/TEMPERATURE/TDS SENSOR
p	WATER PUMP
	USB WIRELESS
	USB HUB
	AUDIO MIXER
T	TELECOM CABINET
L	SAMSUNG 17" I7 LAPTOP
	DISCONNECT SWITCH

teamhawai'i

halepilihonua

TEAM NAME: UNIVERSITY OF HAWAII (TEAM HAWAII)

ADDRESS: UNIVERSITY OF HAWAI'I AT MĀNOA
2410 CAMPUS ROAD
HONOLULU, HI 96822

CONTACT: ROCKWOOD@ARCH.HAWAII.EDU
WWW.SOLAR.HAWAII.EDU

CONSULTANTS

ARCHITECTURE:

ENGINEERS:

LANDSCAPING:

CODE CONSULTANTS:

CLIENT

U.S. DEPARTMENT OF ENERGY

SOLAR DECATHLON 2011

WWW.SOLARDECATHLON.GOV

U.S. DEPARTMENT OF ENERGY SOLAR DECATHLON

MARK	DATE	DESCRIPTION

LOT NUMBER:	306
DRAWN BY:	UNIVERSITY OF HAWAI'I
CHECKED BY:	RON HO AND ASSOCIATES
COPYRIGHT:	UNIVERSITY OF HAWAI'I SCHOOL OF ARCHITECTURE

SHEET TITLE

TELECOMMUNICATIONS SYMBOLS AND NOTES

T-001

5/6/2011 5:36:42 PM

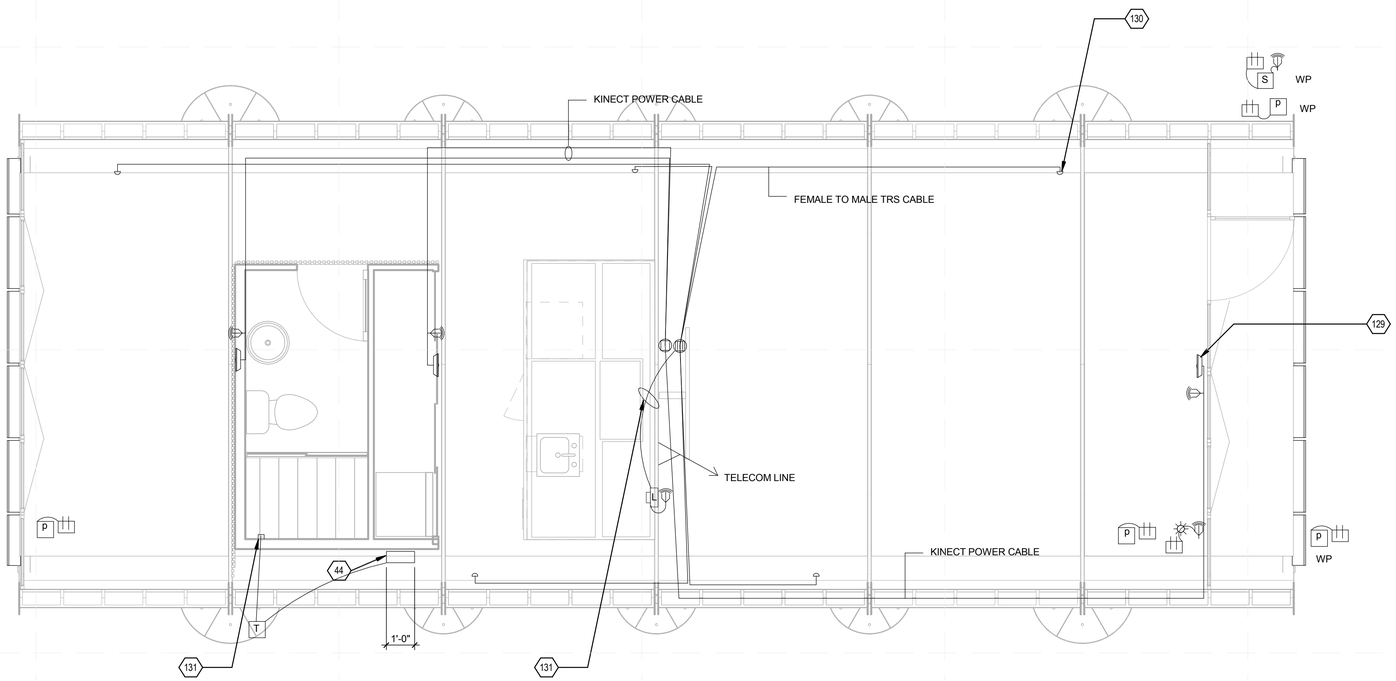

A1 TELECOMMUNICATIONS WIRING PLAN

3/8" = 1'-0"

0 2' 4' 6'

GENERAL SHEET NOTES

REFERENCE KEYNOTES

SHEET KEYNOTES

44	SERVER BOX, 1' X 2' 4", 3' FROM FLOOR
129	MOUNT TO STRUCTURAL SUPPORT, TYPICAL
130	FOR EVERY MICROPHONE, SEE SPECIFICATION SECTION D3060.003 FOR DETAILS ON PRODUCT INSTALLATION
131	CONNECTION FROM MIXER TO SAMSUMG LAPTOP VIA USB CABLE

teamhawai'i

halepilihonua

TEAM NAME: UNIVERSITY OF HAWAII (TEAM HAWAII)

ADDRESS: UNIVERSITY OF HAWAI'I AT MĀNOA
2410 CAMPUS ROAD
HONOLULU, HI 96822

CONTACT: ROCKWOOD@ARCH.HAWAII.EDU
WWW.SOLAR.HAWAII.EDU

CONSULTANTS

ARCHITECTURE:

ENGINEERS:

LANDSCAPING:

CODE CONSULTANTS:

CLIENT

U.S. DEPARTMENT OF ENERGY

SOLAR DECATHLON 2011

WWW.SOLARDECATHLON.GOV

U.S. DEPARTMENT OF ENERGY SOLAR DECATHLON

MARK	DATE	DESCRIPTION

LOT NUMBER:	306
DRAWN BY:	UNIVERSITY OF HAWAI'I
CHECKED BY:	RON HO AND ASSOCIATES
COPYRIGHT:	UNIVERSITY OF HAWAI'I SCHOOL OF ARCHITECTURE

SHEET TITLE

TELECOMMUNICATIONS WIRING PLAN

T-101

5/8/2011 5:36:51 PM

teamhawai'i

halepilihonua

TEAM NAME:	UNIVERSITY OF HAWAII (TEAM HAWAII)
ADDRESS:	UNIVERSITY OF HAWAI'I AT MĀNOA 2410 CAMPUS ROAD HONOLULU, HI 96822
CONTACT:	ROCKWOOD@ARCH.HAWAII.EDU WWW.SOLAR.HAWAII.EDU

CONSULTANTS

ARCHITECTURE:

ENGINEERS:

LANDSCAPING:

CODE CONSULTANTS:

CLIENT

U.S. DEPARTMENT OF ENERGY

SOLAR DECATHLON 2011

WWW.SOLARDECATHLON.GOV

U.S. DEPARTMENT OF ENERGY SOLAR DECATHLON

MARK	DATE	DESCRIPTION

LOT NUMBER:	306
DRAWN BY:	UNIVERSITY OF HAWAI'I
CHECKED BY:	CHECKER
COPYRIGHT:	UNIVERSITY OF HAWAI'I SCHOOL OF ARCHITECTURE

SHEET TITLE

SCHEDULES

T-601

5/6/2011 5:36:53 PM

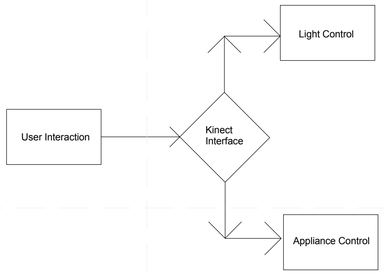

D1 KINECT DATA FLOW CHART

3/4" = 1'-0"

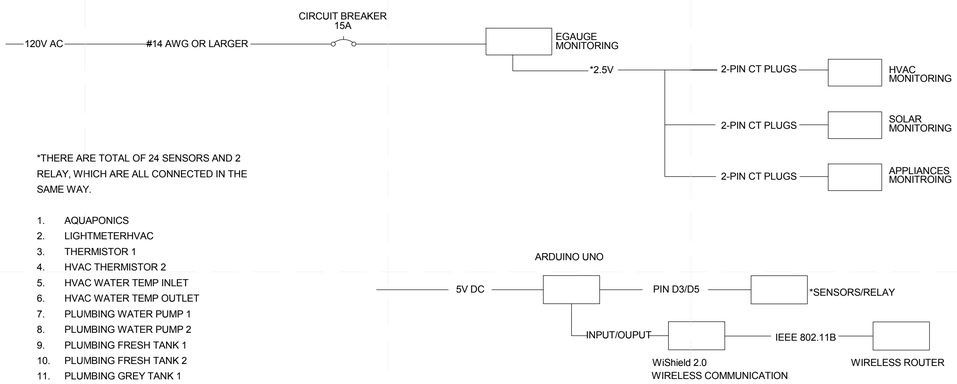

*THERE ARE TOTAL OF 24 SENSORS AND 2 RELAY, WHICH ARE ALL CONNECTED IN THE SAME WAY.

1. AQUAPONICS
2. LIGHTMETERHVAC
3. THERMISTOR 1
4. HVAC THERMISTOR 2
5. HVAC WATER TEMP INLET
6. HVAC WATER TEMP OUTLET
7. PLUMBING WATER PUMP 1
8. PLUMBING WATER PUMP 2
9. PLUMBING FRESH TANK 1
10. PLUMBING FRESH TANK 2
11. PLUMBING GREY TANK 1
12. PLUMBING GREY TANK 2
13. PLUMBING HOT WATER TANK LOWER
14. PLUMBING HOT WATER TANK UPPER
15. PLUMBING HOT WATER TANK VOLUME
16. PLUMBING MIXING VALVE INLET
17. PLUMBING MIXING VALUE OUTLET
18. ENVIRO TEMP 1
19. ENVIRO TEMP 2
20. ENVIRO TEMP 3
21. ENVIRO TEMP 4
22. ENVIRO TEMP 5
23. ENVIRO TEMP 6
24. AQUAPONICS SENSOR PACK RELAY 1
25. AQUAPONICS SENSOR PACK RELAY 2
26. AQUAPONICS PUMP RELAY 1
27. AQUAPONICS PUMP RELAY 2

A1 DATA WIRING DIAGRAM

NTS

5/8/2011 5:36:55 PM

teamhawai'i

halepilihonua

TEAM NAME: UNIVERSITY OF HAWAII (TEAM HAWAII)

ADDRESS: UNIVERSITY OF HAWAI'I AT MĀNOA
2410 CAMPUS ROAD
HONOLULU, HI 96822

CONTACT: ROCKWOOD@ARCH.HAWAII.EDU
WWW.SOLAR.HAWAII.EDU

CONSULTANTS

ARCHITECTURE:

ENGINEERS:

LANDSCAPING:

CODE CONSULTANTS:

CLIENT

U.S. DEPARTMENT OF ENERGY

SOLAR DECATHLON 2011

WWW.SOLARDECATHLON.GOV

U.S. DEPARTMENT OF ENERGY SOLAR DECATHLON

MARK	DATE	DESCRIPTION

LOT NUMBER: 306

DRAWN BY: UNIVERSITY OF HAWAI'I

CHECKED BY: RON HO AND ASSOCIATES

COPYRIGHT: UNIVERSITY OF HAWAI'I
SCHOOL OF ARCHITECTURE

SHEET TITLE

DATA WIRING DIAGRAM

T-602

teamhawai'i

halepilihonua

TEAM NAME:	UNIVERSITY OF HAWAII (TEAM HAWAII)
ADDRESS:	UNIVERSITY OF HAWAI'I AT MĀNOA 2410 CAMPUS ROAD HONOLULU, HI 96822
CONTACT:	ROCKWOOD@ARCH.HAWAII.EDU WWW.SOLAR.HAWAII.EDU

CONSULTANTS

ARCHITECTURE:

ENGINEERS:

LANDSCAPING:

CODE CONSULTANTS:

CLIENT

U.S. DEPARTMENT OF ENERGY

SOLAR DECATHLON 2011

WWW.SOLARDECATHLON.GOV

U.S. DEPARTMENT OF ENERGY SOLAR DECATHLON

MARK	DATE	DESCRIPTION

LOT NUMBER:	306
DRAWN BY:	UNIVERSITY OF HAWAI'I
CHECKED BY:	CHECKER
COPYRIGHT:	UNIVERSITY OF HAWAI'I SCHOOL OF ARCHITECTURE

SHEET TITLE

RESOURCE DRAWINGS (DELETE IF NOT USED)

R-001

5/6/2011 5:26:39 PM

teamhawai'i

halepilihonua

TEAM NAME:	UNIVERSITY OF HAWAII (TEAM HAWAII)
ADDRESS:	UNIVERSITY OF HAWAI'I AT MĀNOA 2410 CAMPUS ROAD HONOLULU, HI 96822
CONTACT:	ROCKWOOD@ARCH.HAWAII.EDU WWW.SOLAR.HAWAII.EDU

CONSULTANTS

ARCHITECTURE:

ENGINEERS:

LANDSCAPING:

CODE CONSULTANTS:

CLIENT

U.S. DEPARTMENT OF ENERGY

SOLAR DECATHLON 2011

WWW.SOLARDECATHLON.GOV

U.S. DEPARTMENT OF ENERGY SOLAR DECATHLON

MARK	DATE	DESCRIPTION

LOT NUMBER:	306
DRAWN BY:	UNIVERSITY OF HAWAI'I
CHECKED BY:	CHECKER
COPYRIGHT:	UNIVERSITY OF HAWAI'I SCHOOL OF ARCHITECTURE

SHEET TITLE

OTHER DISCIPLINES (DELETE IF NOT USED)

X-001

5/6/2011 5:36:59 PM

teamhawai'i

halepilihonua

TEAM NAME:	UNIVERSITY OF HAWAII (TEAM HAWAII)
ADDRESS:	UNIVERSITY OF HAWAI'I AT MĀNOA 2410 CAMPUS ROAD HONOLULU, HI 96822
CONTACT:	ROCKWOOD@ARCH.HAWAII.EDU WWW.SOLAR.HAWAII.EDU

CONSULTANTS

ARCHITECTURE:	
ENGINEERS:	
LANDSCAPING:	
CODE CONSULTANTS:	

CLIENT

U.S. DEPARTMENT OF ENERGY

SOLAR DECATHLON 2011

WWW.SOLARDECATHLON.GOV

U.S. DEPARTMENT OF ENERGY SOLAR DECATHLON

MARK	DATE	DESCRIPTION

LOT NUMBER:	306
DRAWN BY:	UNIVERSITY OF HAWAI'I
CHECKED BY:	CHECKER
COPYRIGHT:	UNIVERSITY OF HAWAI'I SCHOOL OF ARCHITECTURE

SHEET TITLE

CONTRACTOR/SHOP DRAWINGS (DELETE IF NOT USED)

Z-001

5/8/2011 5:37:01 PM

GENERAL SHEET NOTES

1. GENERAL SHEET NOTES
2. GENERAL SHEET NOTES 2
3. GENERAL SHEET NOTES 3
4. GENERAL SHEET NOTES 4
5. GENERAL SHEET NOTES 5
6. GENERAL SHEET NOTES 6
7. GENERAL SHEET NOTES 7
8. GENERAL SHEET NOTES 8

REFERENCE KEYNOTES

SHEET KEYNOTES

teamhawai'i

halepilihonua

TEAM NAME: UNIVERSITY OF HAWAII (TEAM HAWAII)

ADDRESS: UNIVERSITY OF HAWAI'I AT MĀNOA
2410 CAMPUS ROAD
HONOLULU, HI 96822

CONTACT: ROCKWOOD@ARCH.HAWAII.EDU
WWW.SOLAR.HAWAII.EDU

CONSULTANTS

ARCHITECTURE:

ENGINEERS:

LANDSCAPING:

CODE CONSULTANTS:

CLIENT

U.S. DEPARTMENT OF ENERGY

SOLAR DECATHLON 2011

WWW.SOLARDECATHLON.GOV

U.S. DEPARTMENT OF ENERGY SOLAR DECATHLON

MARK	DATE	DESCRIPTION

LOT NUMBER:	306
DRAWN BY:	UNIVERSITY OF HAWAI'I
CHECKED BY:	CHECKER
COPYRIGHT:	UNIVERSITY OF HAWAI'I SCHOOL OF ARCHITECTURE

SHEET TITLE

OPERATIONS SYMBOLS AND NOTES

O-001

5/8/2011 2:22:00 PM

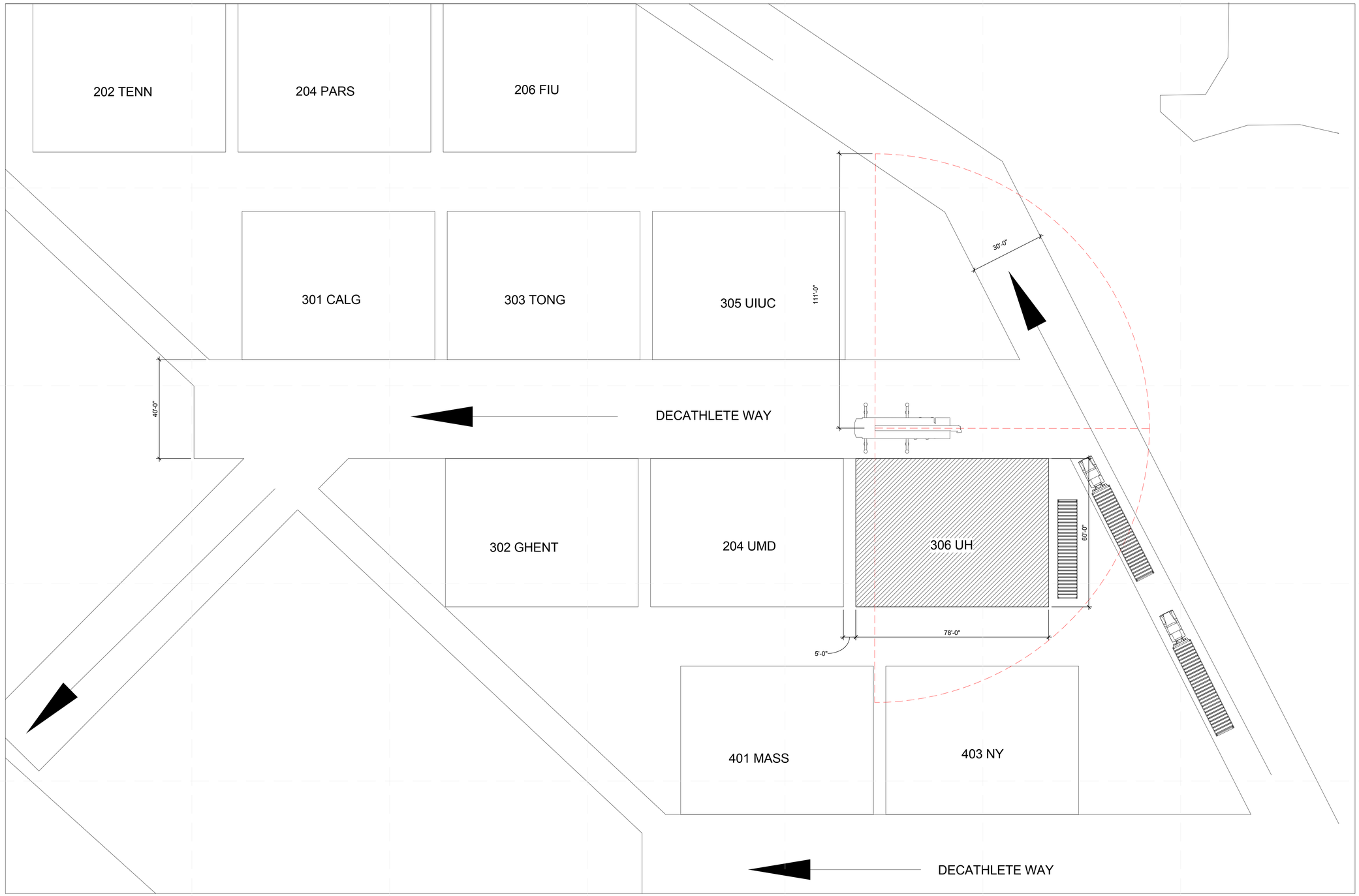

1 ARRIVAL STAGING PLAN
1" = 20'-0"

1" = 20'

5/8/2011 2:22:04 PM

teamhawai'i
halepilihonua

TEAM NAME:	UNIVERSITY OF HAWAII (TEAM HAWAII)
ADDRESS:	UNIVERSITY OF HAWAI'I AT MĀNOA 2410 CAMPUS ROAD HONOLULU, HI 96822
CONTACT:	ROCKWOOD@ARCH.HAWAII.EDU WWW.SOLAR.HAWAII.EDU

CONSULTANTS

ARCHITECTURE:	
ENGINEERS:	
LANDSCAPING:	
CODE CONSULTANTS:	

CLIENT

U.S. DEPARTMENT OF ENERGY
SOLAR DECATHLON 2011
WWW.SOLARDECATHLON.GOV

U.S. DEPARTMENT OF ENERGY SOLAR DECATHLON

MARK	DATE	DESCRIPTION

LOT NUMBER:	306
DRAWN BY:	UNIVERSITY OF HAWAI'I
CHECKED BY:	Checker
COPYRIGHT:	UNIVERSITY OF HAWAI'I SCHOOL OF ARCHITECTURE

SHEET TITLE

ARRIVAL STAGING PLAN

O-100

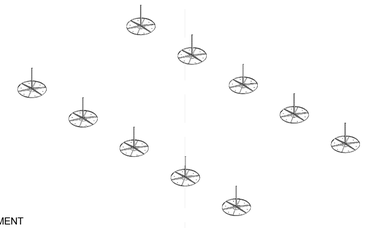

ASSEMBLY 1:
FOOTING PLACEMENT

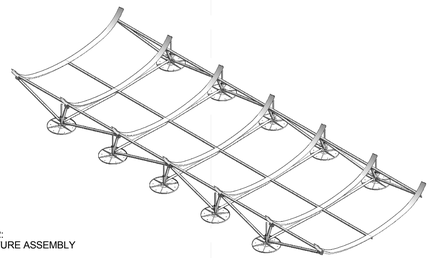

ASSEMBLY 2:
SUBSTRUCTURE ASSEMBLY

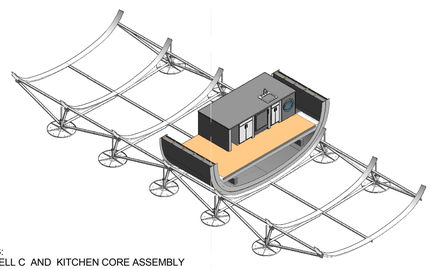

ASSEMBLY 3:
BOTTOM SHELL C AND KITCHEN CORE ASSEMBLY

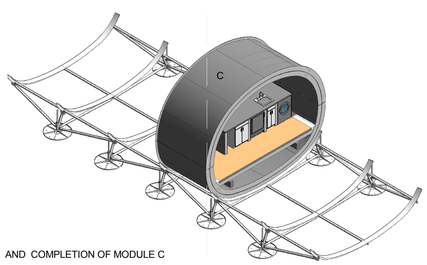

ASSEMBLY 4:
TOP SHELL C AND COMPLETION OF MODULE C

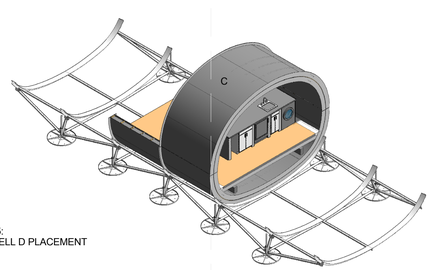

ASSEMBLY 5:
BOTTOM SHELL D PLACEMENT

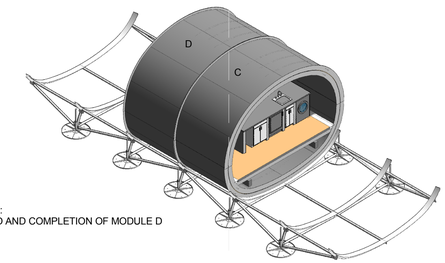

ASSEMBLY 6:
TOP SHELL D AND COMPLETION OF MODULE D

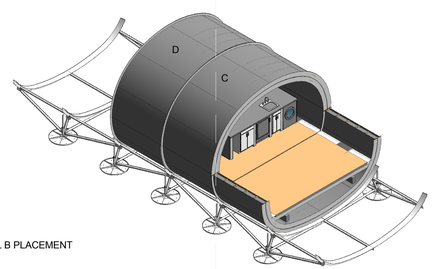

ASSEMBLY 7:
BOTTOM SHELL B PLACEMENT

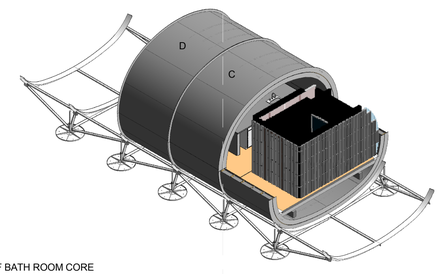

ASSEMBLY 8:
ASSEMBLY OF BATH ROOM CORE

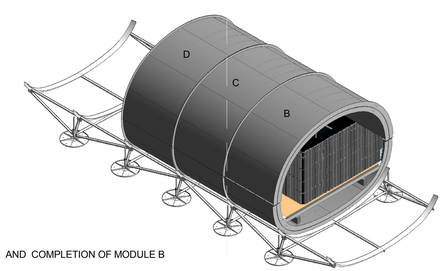

ASSEMBLY 9:
TOP SHELL B AND COMPLETION OF MODULE B

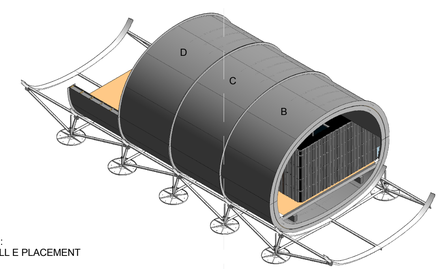

ASSEMBLY 10:
BOTTOM SHELL E PLACEMENT

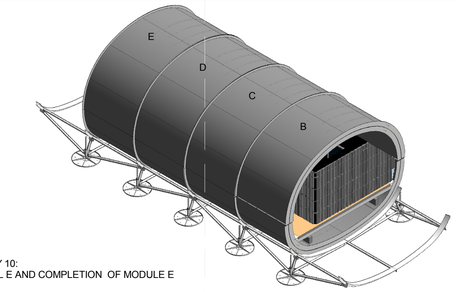

ASSEMBLY 10:
TOP SHELL E AND COMPLETION OF MODULE E

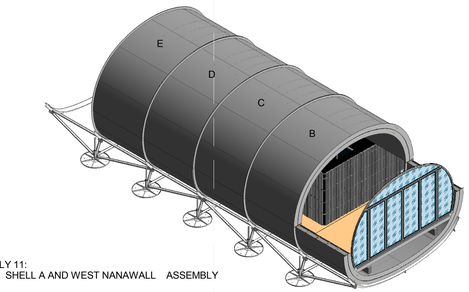

ASSEMBLY 11:
BOTTOM SHELL A AND WEST NANAWALL ASSEMBLY

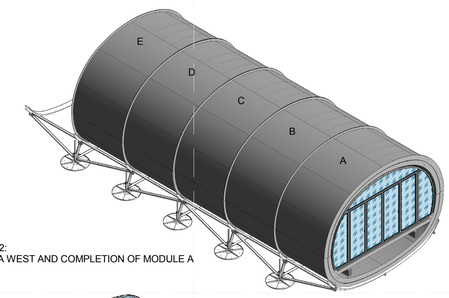

ASSEMBLY 12:
TOP SHELL A WEST AND COMPLETION OF MODULE A

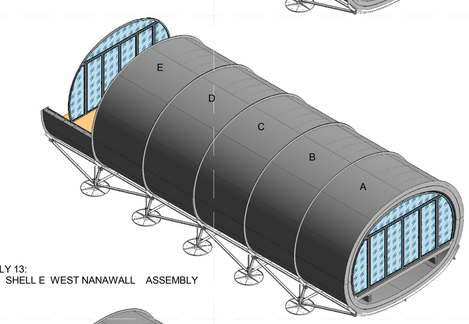

ASSEMBLY 13:
BOTTOM SHELL E WEST NANAWALL ASSEMBLY

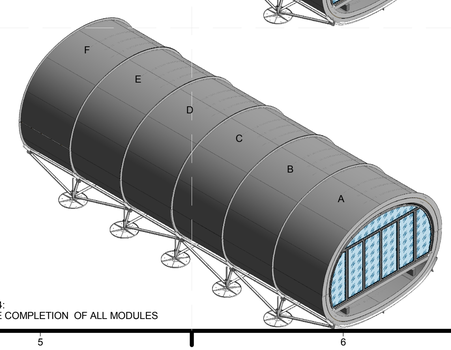

ASSEMBLY 14:
TOP SHELL E COMPLETION OF ALL MODULES

GENERAL SHEET NOTES

REFERENCE KEYNOTES

SHEET KEYNOTES

teamhawai'i
halepilihonua

TEAM NAME: UNIVERSITY OF HAWAII (TEAM HAWAII)

ADDRESS: UNIVERSITY OF HAWAI'I AT MĀNOA
2410 CAMPUS ROAD
HONOLULU, HI 96822

CONTACT: ROCKWOOD@ARCH.HAWAII.EDU
WWW.SOLAR.HAWAII.EDU

CONSULTANTS

ARCHITECTURE:
ENGINEERS:
LANDSCAPING:
CODE CONSULTANTS:

CLIENT
U.S. DEPARTMENT OF ENERGY
SOLAR DECATHLON 2011
WWW.SOLARDECATHLON.GOV

U.S. DEPARTMENT OF ENERGY
SOLAR DECATHLON

MARK	DATE	DESCRIPTION

LOT NUMBER:	306
DRAWN BY:	UNIVERSITY OF HAWAI'I
CHECKED BY:	CHECKER
COPYRIGHT:	UNIVERSITY OF HAWAI'I SCHOOL OF ARCHITECTURE

SHEET TITLE

ARRIVAL SHELL ASSEMBLY SEQUENCE PLANS

O-101

5/8/2011 2:27:22 PM

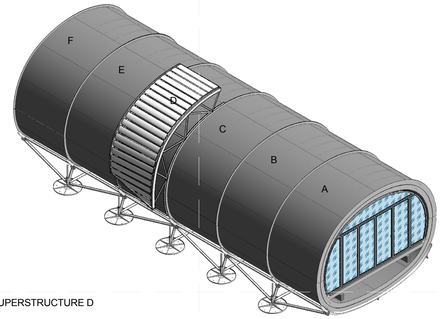

ASSEMBLY 15:
NORTHSIDE SUPERSTRUCTURE D

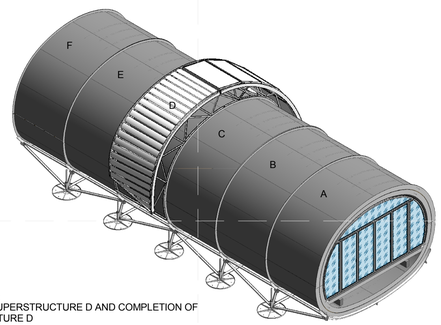

ASSEMBLY 15:
SOUTHSIDE SUPERSTRUCTURE D AND COMPLETION OF SUPERSTRUCTURE D

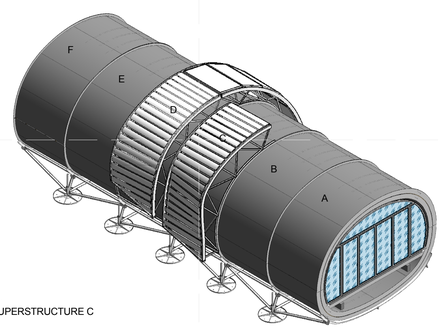

ASSEMBLY 16:
NORTHSIDE SUPERSTRUCTURE C

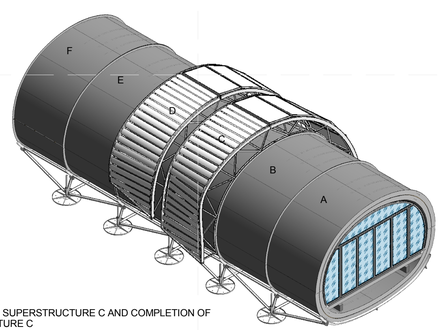

ASSEMBLY 17:
SOUTHTHSIDE SUPERSTRUCTURE C AND COMPLETION OF SUPERSTRUCTURE C

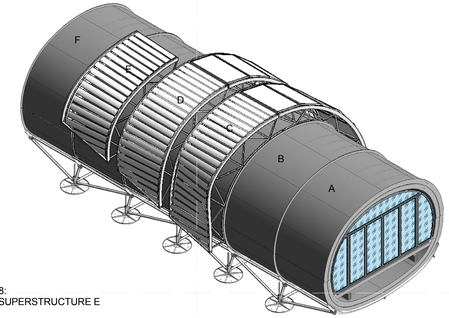

ASSEMBLY 18:
NORTHSIDE SUPERSTRUCTURE E

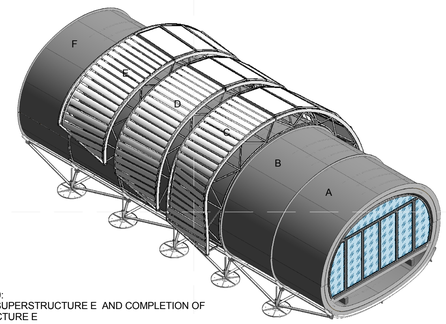

ASSEMBLY 19:
SOUTHSIDE SUPERSTRUCTURE E AND COMPLETION OF SUPERSTRUCTURE E

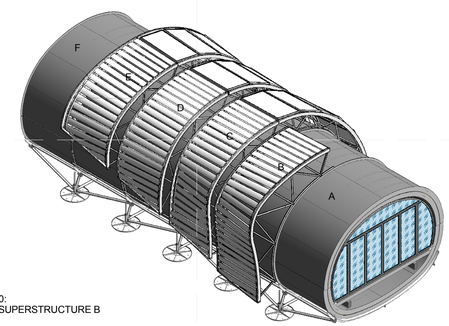

ASSEMBLY 20:
NORTHSIDE SUPERSTRUCTURE B

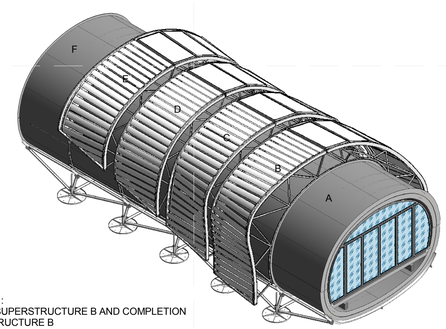

ASSEMBLY 21:
SOUTHSIDE SUPERSTRUCTURE B AND COMPLETION OF SUPERSTRUCTURE B

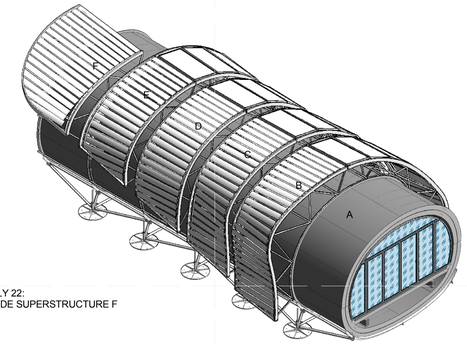

ASSEMBLY 22:
NORTHSIDE SUPERSTRUCTURE F

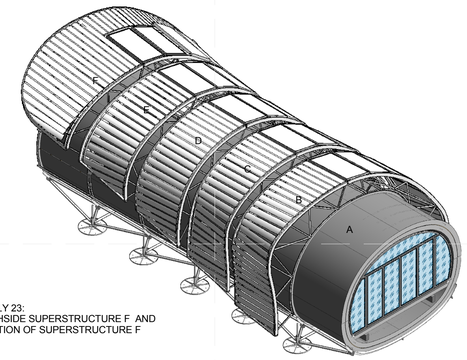

ASSEMBLY 23:
SOUTHTHSIDE SUPERSTRUCTURE F AND COMPLETION OF SUPERSTRUCTURE F

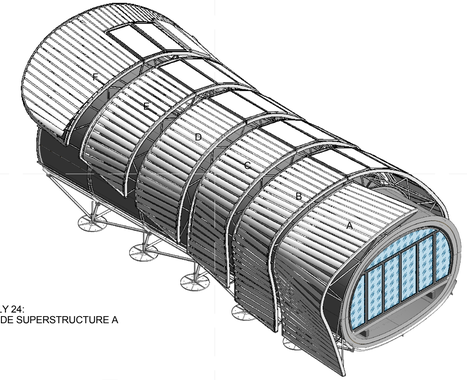

ASSEMBLY 24:
NORTHSIDE SUPERSTRUCTURE A

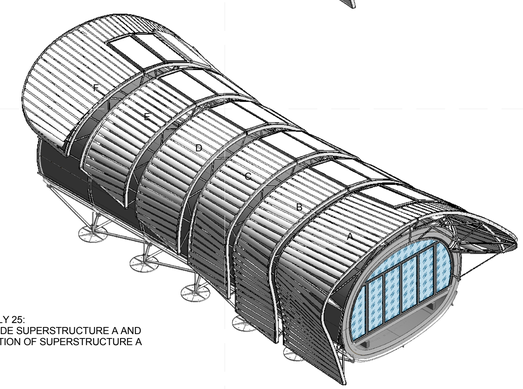

ASSEMBLY 25:
SOUTHSIDE SUPERSTRUCTURE A AND COMPLETION OF SUPERSTRUCTURE A

GENERAL SHEET NOTES

REFERENCE KEYNOTES

SHEET KEYNOTES

teamhawai'i

halepilihonua

TEAM NAME:	UNIVERSITY OF HAWAII (TEAM HAWAII)
ADDRESS:	UNIVERSITY OF HAWAI'I AT MĀNOA 2410 CAMPUS ROAD HONOLULU, HI 96822
CONTACT:	ROCKWOOD@ARCH.HAWAII.EDU WWW.SOLAR.HAWAII.EDU

CONSULTANTS

ARCHITECTURE:

ENGINEERS:

LANDSCAPING:

CODE CONSULTANTS:

CLIENT

U.S. DEPARTMENT OF ENERGY

SOLAR DECATHLON 2011

WWW.SOLARDECATHLON.GOV

U.S. DEPARTMENT OF ENERGY SOLAR DECATHLON

MARK	DATE	DESCRIPTION

LOT NUMBER:	306
DRAWN BY:	UNIVERSITY OF HAWAI'I
CHECKED BY:	CHECKER
COPYRIGHT:	UNIVERSITY OF HAWAI'I SCHOOL OF ARCHITECTURE

SHEET TITLE

SUPERSTRUCTURE ASSEMBLY SEQUENCE PLAN

O-102

5/6/2011 2:36:00 PM

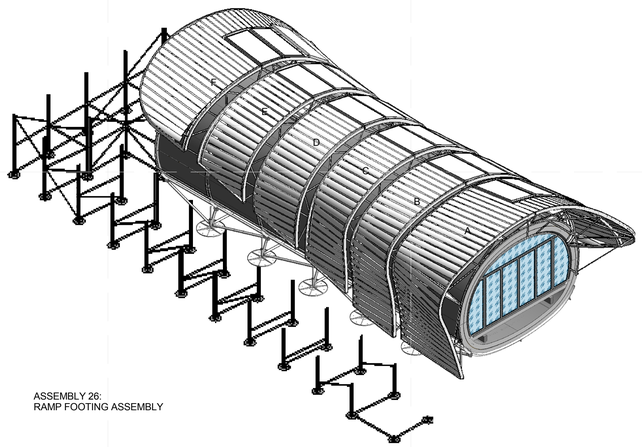

ASSEMBLY 26:
RAMP FOOTING ASSEMBLY

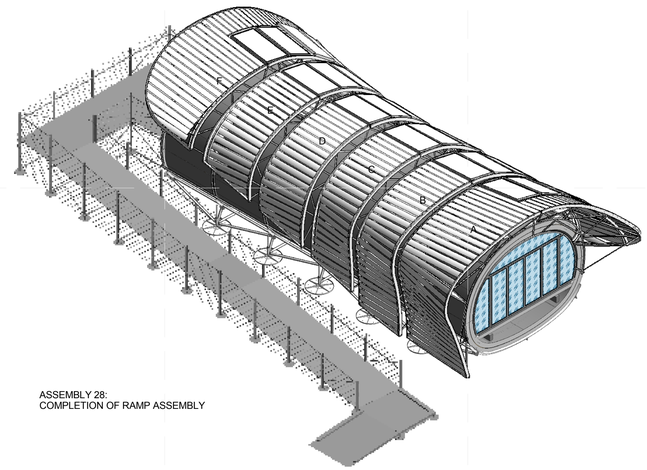

ASSEMBLY 28:
COMPLETION OF RAMP ASSEMBLY

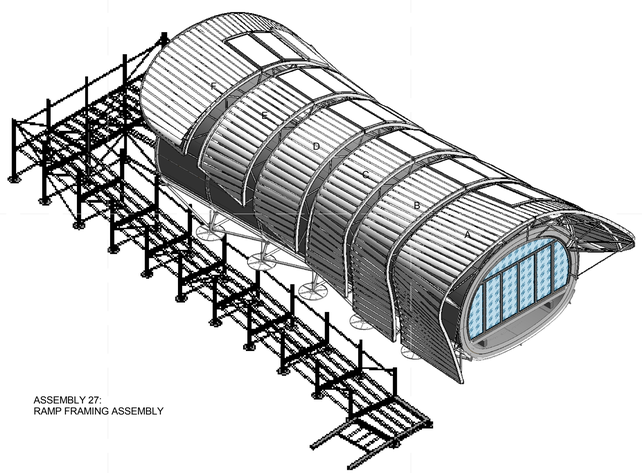

ASSEMBLY 27:
RAMP FRAMING ASSEMBLY

GENERAL SHEET NOTES

REFERENCE KEYNOTES

SHEET KEYNOTES

teamhawai'i

halepilihonua

TEAM NAME:	UNIVERSITY OF HAWAII (TEAM HAWAII)
ADDRESS:	UNIVERSITY OF HAWAI'I AT MĀNOA 2410 CAMPUS ROAD HONOLULU, HI 96822
CONTACT:	ROCKWOOD@ARCH.HAWAII.EDU WWW.SOLAR.HAWAII.EDU

CONSULTANTS

ARCHITECTURE:

ENGINEERS:

LANDSCAPING:

CODE CONSULTANTS:

CLIENT

U.S. DEPARTMENT OF ENERGY

SOLAR DECATHLON 2011

WWW.SOLARDECATHLON.GOV

U.S. DEPARTMENT OF ENERGY SOLAR DECATHLON

MARK	DATE	DESCRIPTION

LOT NUMBER:	306
DRAWN BY:	UNIVERSITY OF HAWAI'I
CHECKED BY:	Checker
COPYRIGHT:	UNIVERSITY OF HAWAI'I SCHOOL OF ARCHITECTURE

SHEET TITLE

RAMP ASSEMBLY SEQUENCE PLAN

O-103

5/6/2011 2:38:37 PM

GENERAL SHEET NOTES

REFERENCE KEYNOTES

SHEET KEYNOTES

teamhawai'i

halepilihonua

TEAM NAME: UNIVERSITY OF HAWAII (TEAM HAWAII)

ADDRESS: UNIVERSITY OF HAWAI'I AT MĀNOA
2410 CAMPUS ROAD
HONOLULU, HI 96822

CONTACT: ROCKWOOD@ARCH.HAWAII.EDU
WWW.SOLAR.HAWAII.EDU

CONSULTANTS

ARCHITECTURE:

ENGINEERS:

LANDSCAPING:

CODE CONSULTANTS:

CLIENT

U.S. DEPARTMENT OF ENERGY

SOLAR DECATHLON 2011

WWW.SOLARDECATHLON.GOV

U.S. DEPARTMENT OF ENERGY SOLAR DECATHLON

MARK	DATE	DESCRIPTION

LOT NUMBER:	306
DRAWN BY:	UNIVERSITY OF HAWAI'I
CHECKED BY:	Checker
COPYRIGHT:	UNIVERSITY OF HAWAI'I SCHOOL OF ARCHITECTURE

SHEET TITLE

DEPARTURE ASSEMBLY SEQUENCE PLAN

O-104

5/8/2011 5:21:10 PM

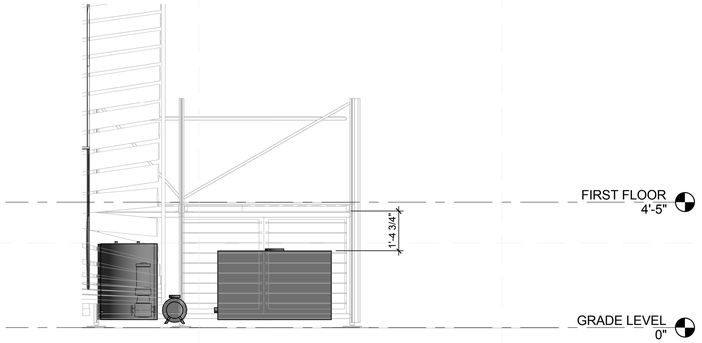

D1 WATER DELIVERY AND REMOVAL SECTION DETAIL
3/8" = 1'-0"
0 2' 4' 6'

WATER DELIVERY AND REMOVAL SCHEDULE

1. ON DAY 5 OF COMPETITION WATER WILL BE DELIVERED TO SITE. TRUCK WILL ARRIVE ON DECATHLON WAY. HOSE WILL BE UNLOADED AND BROUGHT TO SIDE OF PORCH.
2. THE PORCH ACCESS DOORS WILL BE OPENED AND THE HOSE WILL BE RUN UNDER PORCH AREA TO BE INSERTED INTO THE FRESH WATER STORAGE TANK. PRIOR TO DELIVERY A CONNECTION BETWEEN THE FRESH WATER TANK AND SANITARY TANK WILL BE MADE. AS THE FRESH WATER TANK IS FILLED, WATER WILL ALSO FLOW INTO THE SANITARY WATER TANK VIA THE CONNECTION. BOTH TANKS WILL BE FILLED WITH APPROXIMATELY 500 GALLONS EACH, FOR A TOTAL INITIAL DELIVERY OF 1000 GALLONS.
3. AFTER INITIAL DELIVERY WATER WILL BE DISTRIBUTED FROM FRESH AND SANITARY WATER TANKS INTO THE THERMAL MASS PILLOW TANK AND FIRE TANK. THIS WILL BE DONE USING A SANITARY SUBMERSIBLE PUMP AND HOSE. THIS PROCESS WILL EMPTY BOTH FRESH AND SANITARY WATER TANKS.
4. WATER TRUCK WILL RETURN FOR "TOP OFF" OF FRESH WATER TANK. THIS WILL TAKE THE REMAINING 500 GALLONS OF ALLOTTED WATER DELIVERY BUDGET. AT THIS POINT THE CONNECTION BETWEEN THE SANITARY AND FRESH WATER TANKS WILL HAVE BEEN REMOVED, AND CONNECTION POINTS PLUGGED. IT WILL REMAIN THIS WAY DURING COMPETITION.
5. ON WATER REMOVAL DAY THE WATER TRUCK WILL ARRIVE ON DECATHLON WAY. HOSE WILL BE UNLOADED AND BROUGHT TO SIDE OF PORCH.
6. PRIOR TO WATER REMOVAL WATER WILL BE DRAINED FROM THERMAL MASS PILLOW TANK AND FIRE TANK BACK INTO FRESH AND SANITARY WATER TANKS. THIS WILL BE DONE USING A SANITARY SUBMERSIBLE PUMP AND HOSE. THIS PROCESS WILL FILL BOTH FRESH AND SANITARY WATER TANKS.
7. THE PORCH ACCESS DOORS WILL BE OPENED AND THE HOSE WILL BE RUN UNDER PORCH AREA TO BE INSERTED INTO THE FRESH WATER STORAGE TANK. PRIOR TO REMOVAL THE CONNECTION BETWEEN THE FRESH WATER TANK AND SANITARY TANK WILL BE MADE. AS THE FRESH WATER TANK IS DRAINED, WATER WILL ALSO DRAIN FROM THE SANITARY WATER TANK VIA THE CONNECTION. BOTH TANKS WILL BE DRAINED OF APPROXIMATELY 500 GALLONS EACH, FOR A TOTAL INITIAL REMOVAL OF 1000 GALLONS.
8. AFTER INITIAL REMOVAL THE WATER NOW CONTAINED IN THE AQUAPONICS TANKS WILL BE DRAINED AND PUMPED BACK INTO SANITARY WATER TANK, WITH CONNECTION BETWEEN FRESH AND SANITARY TANKS STILL IN PLACE. THE WATER TRUCK WILL RETURN AFTER SERVICING OTHER HOUSES TO REMOVE APPROXIMATELY 500 GALLONS OF REMAINING WATER.

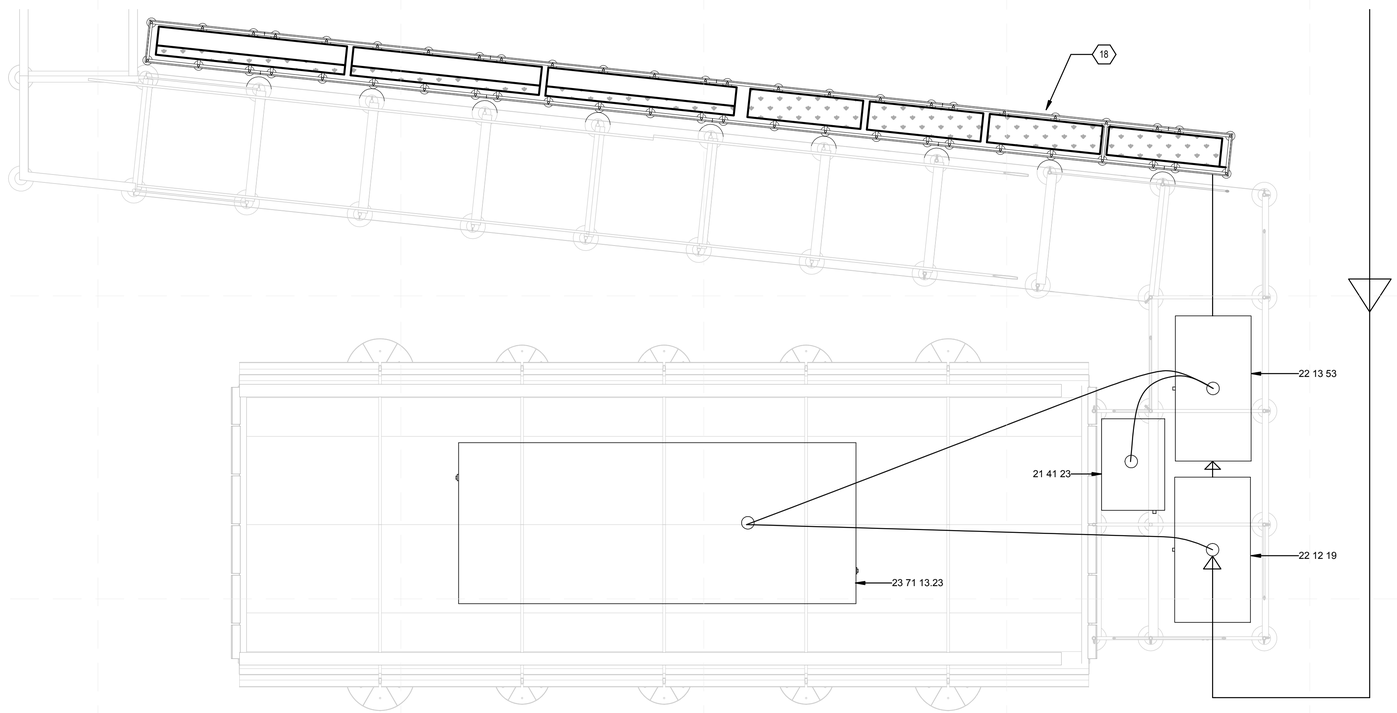

A1 WATER DELIVERY AND REMOVAL PLAN
1/4" = 1'-0"
0 2' 4' 8'

GENERAL SHEET NOTES

REFERENCE KEYNOTES

21 41 23	GROUND SUCTION STORAGE TANKS FOR FIRE-SUPPRESSION WATER
22 12 19	FACILITY GROUND-MOUNTED, POTABLE WATER STORAGE TANKS
22 13 53	FACILITY SEPTIC TANKS
23 71 13.23	PRESSURIZED-WATER THERMAL STORAGE TANKS

SHEET KEYNOTES

18	AQUAPONICS TANKS

teamhawai'i
halepilihonua

TEAM NAME: UNIVERSITY OF HAWAII (TEAM HAWAII)
ADDRESS: UNIVERSITY OF HAWAI'I AT MĀNOA 2410 CAMPUS ROAD HONOLULU, HI 96822
CONTACT: ROCKWOOD@ARCH.HAWAII.EDU WWW.SOLAR.HAWAII.EDU

CONSULTANTS
ARCHITECTURE:
ENGINEERS:
LANDSCAPING:
CODE CONSULTANTS:

CLIENT
U.S. DEPARTMENT OF ENERGY
SOLAR DECATHLON 2011
WWW.SOLARDECATHLON.GOV

U.S. DEPARTMENT OF ENERGY SOLAR DECATHLON

MARK	DATE	DESCRIPTION

LOT NUMBER:	306
DRAWN BY:	UNIVERSITY OF HAWAI'I
CHECKED BY:	Checker
COPYRIGHT:	UNIVERSITY OF HAWAI'I SCHOOL OF ARCHITECTURE

SHEET TITLE
WATER DELIVERY AND REMOVAL PLAN

O-201

5/8/2011 5:22:11 PM

GENERAL SHEET NOTES

1. GENERAL SHEET NOTES
2. GENERAL SHEET NOTES 2
3. GENERAL SHEET NOTES 3
4. GENERAL SHEET NOTES 4
5. GENERAL SHEET NOTES 5
6. GENERAL SHEET NOTES 6
7. GENERAL SHEET NOTES 7
8. GENERAL SHEET NOTES 8

REFERENCE KEYNOTES

SHEET KEYNOTES

teamhawai'i

halepilihonua

TEAM NAME: UNIVERSITY OF HAWAII (TEAM HAWAII)

ADDRESS: UNIVERSITY OF HAWAI'I AT MĀNOA
2410 CAMPUS ROAD
HONOLULU, HI 96822

CONTACT: ROCKWOOD@ARCH.HAWAII.EDU
WWW.SOLAR.HAWAII.EDU

CONSULTANTS

ARCHITECTURE:

ENGINEERS:

LANDSCAPING:

CODE CONSULTANTS:

CLIENT

U.S. DEPARTMENT OF ENERGY

SOLAR DECATHLON 2011

WWW.SOLARDECATHLON.GOV

U.S. DEPARTMENT OF ENERGY SOLAR DECATHLON

MARK	DATE	DESCRIPTION

LOT NUMBER:	306
DRAWN BY:	UNIVERSITY OF HAWAI'I
CHECKED BY:	CHECKER
COPYRIGHT:	UNIVERSITY OF HAWAI'I SCHOOL OF ARCHITECTURE

SHEET TITLE

CONSTRUCTION EQUIPMENT SCHEDULE

O-601

5/8/2011 5:22:15 PM

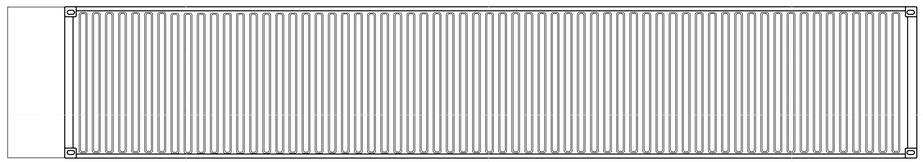

2 TRAILER LOADING PLAN

1/4" = 1'-0"

0 2' 4' 8'

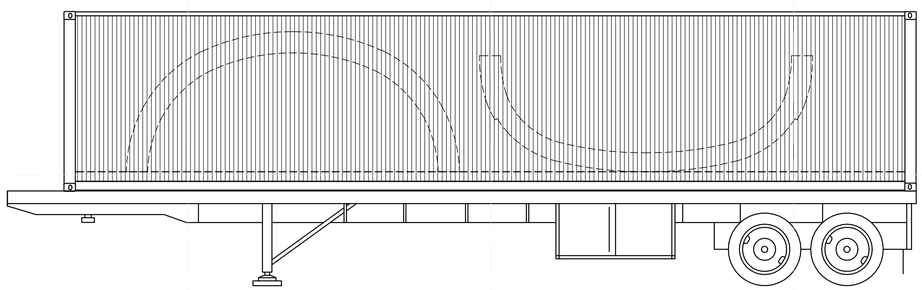

1 TRAILER LOADING ELEVATION

1/4" = 1'-0"

0 2' 4' 8'

GENERAL SHEET NOTES

REFERENCE KEYNOTES

SHEET KEYNOTES

teamhawai'i

halepilihonua

TEAM NAME: UNIVERSITY OF HAWAII (TEAM HAWAII)

ADDRESS: UNIVERSITY OF HAWAI'I AT MĀNOA
2410 CAMPUS ROAD
HONOLULU, HI 96822

CONTACT: ROCKWOOD@ARCH.HAWAII.EDU
WWW.SOLAR.HAWAII.EDU

CONSULTANTS

ARCHITECTURE:

ENGINEERS:

LANDSCAPING:

CODE CONSULTANTS:

CLIENT

U.S. DEPARTMENT OF ENERGY

SOLAR DECATHLON 2011

WWW.SOLARDECATHLON.GOV

U.S. DEPARTMENT OF ENERGY SOLAR DECATHLON

MARK	DATE	DESCRIPTION

LOT NUMBER: 306

DRAWN BY: UNIVERSITY OF HAWAI'I

CHECKED BY: CHECKER

COPYRIGHT: UNIVERSITY OF HAWAI'I
SCHOOL OF ARCHITECTURE

SHEET TITLE

TRUCK LOADING DIAGRAM

O-602

5/8/2011 5:22:20 PM

GENERAL SHEET NOTES

1. GENERAL SHEET NOTES
2. GENERAL SHEET NOTES 2
3. GENERAL SHEET NOTES 3
4. GENERAL SHEET NOTES 4
5. GENERAL SHEET NOTES 5
6. GENERAL SHEET NOTES 6
7. GENERAL SHEET NOTES 7
8. GENERAL SHEET NOTES 8

REFERENCE KEYNOTES

SHEET KEYNOTES

teamhawai'i

halepilihonua

TEAM NAME: UNIVERSITY OF HAWAII (TEAM HAWAII)

ADDRESS: UNIVERSITY OF HAWAI'I AT MĀNOA
2410 CAMPUS ROAD
HONOLULU, HI 96822

CONTACT: ROCKWOOD@ARCH.HAWAII.EDU
WWW.SOLAR.HAWAII.EDU

CONSULTANTS

ARCHITECTURE:

ENGINEERS:

LANDSCAPING:

CODE CONSULTANTS:

CLIENT

U.S. DEPARTMENT OF ENERGY

SOLAR DECATHLON 2011

WWW.SOLARDECATHLON.GOV

U.S. DEPARTMENT OF ENERGY SOLAR DECATHLON

MARK	DATE	DESCRIPTION

LOT NUMBER:	306
DRAWN BY:	UNIVERSITY OF HAWAI'I
CHECKED BY:	CHECKER
COPYRIGHT:	UNIVERSITY OF HAWAI'I SCHOOL OF ARCHITECTURE

SHEET TITLE

3D REPRESENTATIONS

O-901

5/8/2011 5:22:24 PM