Project Manual

Cover Page

U.S. DEPARTMENT OF ENERGY SOLAR DECATHLON 2011

Team Name

teamhawai'i

University of Hawai'i

Project Name

halepilihonua

Team Contact Information

School of Architecture, Room 301A
University of Hawai'i at Mānoa
2410 Campus Road
Honolulu, HI 96822
P | 808.956.8430
F | 808.956.7778
E | rockwood@arch.hawaii.edu

Submission Name

UH_MANUAL_2011-05-03.PDF

Submission Date

2011-05-03

Contents

Cover Page **1**

Summary of Changes **5**

November 23, 2010 Revision *5*

January 31, 2011 Revision *5*

March 22, 2011 Revision *5*

May 3, 2011 Revision *5*

Rules Compliance Checklist **6**

Structural Calculations **9**

Detailed Water Budget **10**

Summary of Unlisted Electrical Components **11**

Summary of Reconfigurable Features **12**

Interconnection Application Form **13**

Energy Analysis Results and Discussion **14**

Construction Specifications **17**

DIVISION 01 GENERAL REQUIREMENTS *1*

SECTION 01 10 00 1
SECTION 01 30 00 3
SECTION 01 40 00 6
SECTION 01 60 00 8
SECTION 01 74 19 10

DIVISION 05 METALS *13*

SECTION 05 05 23 13
SECTION 05 12 00 15
SECTION 05 14 00 21
SECTION 05 15 16 23
SECTION 05 50 00 26

DIVISION 06 WOOD, PLASTICS, AND COMPOSITES *28*

SECTION 06 05 23 28
SECTION 06 10 00 31

SECTION 06 15 00 37
SECTION 06 20 00 39
SECTION 06 43 16 43
SECTION 06 64 00 46
SECTION 06 73 00 51
SECTION 06 80 00 56

DIVISION 07 THERMAL AND MOISTURE PROTECTION 61
SECTION 07 21 00 61
SECTION 07 62 00 63
SECTION 07 91 13 65
SECTION 07 92 00 69

DIVISION 08 OPENINGS 72
SECTION 08 16 00 72
SECTION 08 35 15 79
SECTION 08 70 00 85
SECTION 08 91 00 88

DIVISION 09 FINISHES 90
SECTION 09 62 23 90
SECTION 09 91 00 95

DIVISION 10 SPECIALTIES 97
SECTION 10 28 00 97

DIVISION 11 EQUIPMENT 100
SECTION 11 31 00 100

DIVISION 12 FURNISHINGS 105
SECTION 12 21 16 105
SECTION 12 31 00 107

DIVISION 21 FIRE SUPPRESSION 110
SECTION 21 09 00 110
SECTION 21 13 00 112
SECTION 21 24 16 116
SECTION 21 31 13 118
SECTION 21 41 23 122

DIVISION 22 PLUMBING 124
SECTION 22 11 16 124
SECTION 22 11 23.26 127
SECTION 22 12 19 130
SECTION 22 13 16 132
SECTION 22 13 19.36 134
SECTION 22 13 29.16 136

SECTION 22 13 53 138
SECTION 22 33 30.23 140
SECTION 22 41 00 144

DIVISION 23 HEATING, VENTILATING, AND AIR-CONDITIONNIG (HVAC) 147
SECTION 23 09 23 147
SECTION 23 21 13.43 149
SECTION 23 21 23.13 151
SECTION 23 30 00 154
SECTION 23 56 13.13 158
SECTION 23 71 13.23 160
SECTION 23 71 13.26 163
SECTION 23 81 46 165
SECTION 23 84 16 168

DIVISION 26 ELECTRICAL 172
SECTION 26 00 00 172
SECTION 26 09 13 182
SECTION 26 09 23 186
SECTION 26 09 43 189
SECTION 26 30 00 193

DIVISION 28 ELECTRONIC SAFERTY AND SERCURITY 196
SECTION 28 31 46 196

DIVISION 32 EXTERIOR IMPROVEMENTS 198
SECTION 32 80 00 198

DIVISION 41 MATERIAL PROCESSING AND HANDLING EQUPIMENT 204
SECTION 41 22 00 204
SECTION 41 62 23 206
SECTION 41 65 16 208

Appendix A – Structural Calculations 1

Appendix B – Mechanical Calculations 2

Appendix C – Manufacturer's Submittals/Data Sheets 3

Summary of Changes

Significant changes to the project manual that have occurred between submissions have been outlined below. The Construction Drawings should also be reviewed for relevant revisions.

November 23, 2010 Revision

The Project Manual has been updated from the previous issue. Revisions include:

- Revision 1: The table of contents has been updated.
- Revision 2: Bookmarks have been added, reorganized, and renamed.

January 31, 2011 Revision

The Project Manual has been updated from the previous issue. Revisions include:

- Revision 1: Section Format and Page Format requirements have been applied.
- Revision 2: The table of contents has been updated.
- Revision 3: Bookmarks have been added, reorganized, and renamed.
- Revision 4: Detailed Water Budget has been updated.
- Revision 5: Interconnection Application Form has been updated.

March 22, 2011 Revision

The Project Manual has been updated from the previous issue. Revisions include:

- Revision 1: Expansion of project specifications.
- Revision 2: A summary of reconfigurable features has been added.
- Revision 3: Bookmarks have been added, reorganized, and renamed.
- Revision 4: Structural calculations have been added.
- Revision 5: Energy analysis Updated.
- Revision 6: Rules Compliance Checklist updated.

May 3, 2011 Revision

The Project Manual has been updated from the previous issue. Revisions include:

- Revision 1: Expansion of project specifications with Manufacturer Data Sheets
- Revision 2: A summary of reconfigurable features has been added.
- Revision 3: Bookmarks have been Updated, reorganized, and renamed.
- Revision 4: Rules Compliance Checklist updated.
- Revision 5: Detailed Water Budget Has Been Updated.

Rules Compliance Checklist

RULE	RULE DESCRIPTION	LOCATION DESCRIPTION	LOCATION
Rule 4-2	Construction Equipment	Drawing(s) showing the assembly and disassembly sequences and the movement of heavy machinery on the competition site	O-100 O-101 O-102 O-103 O-602
Rule 4-2	Construction Equipment	Specifications for heavy machinery	41 22 00 41 62 23
Rule 4-3	Ground Penetration	Drawing(s) showing the locations and depths of all ground penetrations on the competition site	A1/S-101 D1-D3/S-521 B1/S-535
Rule 4-4	Impact on the Turf	Drawing(s) showing the location, contact area, and soil-bearing pressure of every component resting directly on the turf	A-1/C-101 A-1/M-104
Rule 4-5	Generators	Specifications for generators	41 65 16
Rule 4-6	Spill Containment	Drawing(s) showing the locations of all equipment, containers, and pipes that will contain liquids at any point during the event	A1/M-102
Rule 4-6	Spill Containment	Specifications for all equipment, containers, and pipes that will contain fluids at any point during the event	Division 21 Division 22 Division 23 Division 32
Rule 4-7	Lot Conditions	Calculations showing that the structural design remains compliant even if 18 in. (45.7 cm) of vertical elevation change exists	PM Appendix-A P 3.1-1
Rule 4-7	Lot Conditions	Drawing(s) showing shimming methods and materials to be used if 18 in. (45.7 cm) of vertical elevation change exists on the lot	B1/S-535
Rule 5-2	Solar Envelope Dimensions	Drawing(s) showing the location of all house and site components relative to the solar envelope	A1-C1/G-201 A1-C1/G-202
Rule 5-2	Solar Envelope Dimensions	List of solar envelope exemption requests accompanied by justifications and drawing references	NA

Rule 6-1	Structural Design Approval	List of, or marking on, all drawing and project manual sheets that have been or will be stamped by the qualified, licensed design professional in the stamped structural submission; the stamped submission shall consist entirely of sheets that also appear in the drawings and project manual	PM Appendix-A P. 1-54 S-001 – S-901 SB-101 – SB-402 SP-201 – SP-602 R-101 – R-813
Rule 6-2	Finished Square Footage	Drawing(s) showing all information needed by the rules officials to measure the finished square footage electronically	G-101
Rule 6-2	Finished Square Footage	Drawing(s) showing all movable components that may increase the finished square footage if operated during contest week	NA
Rule 6-3	Entrance and Exit Routes	Drawing(s) showing the accessible public tour route and the ground surface area that will be covered by organizer-provided walkway material	A1/G-102 A1/G-103
Rule 7-1	Placement	Drawing(s) showing the location of all vegetation and, if applicable, the movement of vegetation designed as part of an integrated mobile system	A1/L-101
Rule 7-2	Watering Restrictions	Drawing(s) showing the layout and operation of greywater irrigation systems	A1/L-102
Rule 8-1	PV Technology Limitations	Specifications for photovoltaic components	26 30 00
Rule 8-3	Batteries	Drawing(s) showing the location(s) and quantity of all primary and secondary batteries and stand-alone, PV-powered devices	A1/E-106 E-605
Rule 8-3	Batteries	Specifications for all primary and secondary batteries and stand-alone, PV-powered devices	26 09 23
Rule 8-4	Desiccant Systems	Drawing(s) describing the operation of the desiccant system	NA
Rule 8-4	Desiccant Systems	Specifications for desiccant system components	NA
Rule 8-5	Village Grid	Completed interconnection application form.	PM 15
Rule 8-5	Village Grid	Drawing(s) showing the locations of the photovoltaics, inverter(s), terminal box, meter housing, service equipment, and grounding means	A1/E-101 A1/E-104 A1/E-201
Rule 8-5	Village Grid	Specifications for the photovoltaics, inverter(s), terminal box, meter housing, service equipment, and grounding means	26 00 00 26 09 13 26 30 00
Rule 8-5	Village Grid	One-line electrical diagram	A1/E-601

Rule 8-5	Village Grid	Calculation of service/feeder net computed load per NEC 220	PM 15
Rule 8-5	Village Grid	Site plan showing the house, decks, ramps, tour paths, and terminal box	A1/E-101 A1/E-106
Rule 8-5	Village Grid	Elevation(s) showing the meter housing, main utility disconnect, and other service equipment	A1-E1/E-2.01
Rule 9-1	Container Locations	Drawing(s) showing the location of all liquid containers relative to the finished square footage	A1/M-103
Rule 9-1	Container Locations	Drawing(s) demonstrating that the primary supply water tank(s) is fully shaded from direct solar radiation between 9 a.m. and 5 p.m. EDT or between 8 a.m. and 4 p.m. solar time on October 1	G-602
Rule 9-2	Team-Provided Liquids	Quantity, specifications , and delivery date(s) of all team-provided liquids for irrigation, thermal mass, hydronic system pressure testing, and thermodynamic system operation	Division 21 Division 22 Division 23 Division 32
Rule 9-3	Greywater Reuse	Drawing(s) showing the layout and operation of greywater reuse systems	NA
Rule 9-4	Rainwater Collection	Drawing(s) showing the layout and operation of rainwater collection systems	NA
Rule 9-6	Thermal Mass	Drawing(s) showing the locations of liquid-based thermal mass systems	A1/M-101 C1-C4/M-201
Rule 9-6	Thermal Mass	Specifications for components of liquid-based thermal mass systems	23 71 13.23 23 71 13.26
Rule 9-7	Greywater Heat Recovery	Drawing(s) showing the layout and operation of greywater heat recovery systems	NA
Rule 9-8	Water Delivery	Drawing(s) showing the complete sequence of water delivery and distribution events	A1-D1/O-201
Rule 9-8	Water Delivery	Specifications for the containers to which water will be delivered	22 12 19
Rule 9-9	Water Removal	Drawing(s) showing the complete sequence of water consolidation and removal events	A1/O-201
Rule 9-9	Water Removal	Specifications for the containers from which water will be removed	22 12 19
Rule 11-4	Public Exhibit	Interior and exterior plans showing entire accessible tour route	A1/G-103

Structural Calculations

See Attached Appendix – Structural Calculations.

Detailed Water Budget

FUNCTION	WATER USE (GALLONS)	WATER STORAGE (GALLONS)	CALCULATIONS		NOTES
Hot Water Draws	240		15	16	Will Draw From Fresh Water Tank
Water Vaporization	3		0.75	4	Will Draw From Fresh Water Tank
Dishwasher	10		2	5	Will Draw From Fresh Water Tank
Clothes Washer	160		20	8	Will Draw From Fresh Water Tank
Solar Storage Tanks		80*			Tank Capacity (*Will draw from Fresh Water to provide Hot water.)
Fire Suppresion Tank	266	280			Minmun 266 gallons needed for Fire Suppression
Thermal Storage Tank	770	770			Thermal Storage Water Fill
Fresh Water Tank		450			Initial Fresh Water Tank Fill
Aquaponics	50*	500**			*50 gallons Team Provided for Irrigation.**Capacity of system after grey water recovery.
Saftey Factor	50	N/A			
Totals	1499	1500			
WATER REQUIRED		**1500**	gallons		

Summary of Unlisted Electrical Components

All electrical components carry an approved testing agency's listing per Section 6 -7 of the SD2011 Building Code.

Summary of Reconfigurable Features

NA.

Interconnection Application Form

_____TEAM HAWAII LOT 306_____

PV Systems

Module Manufacturer	Short Description of Array	DC Rating of Array (sum of the DC ratings)
SAMSUNG	LPC244SM – 26 244W PANELS, IN 2 STRINGS OF 13	I=13.4063 A, Vmax=536.25V(per row)

Total DC power of all arrays is _____6.34kW _____ kW (in tenths)

INVERTERS

Inverter Manufacturer	Model Number	Voltage	Rating (kVA or KW)	Quantity
SUNNY BOY	6000US	Vin=250 to 480V	6	1

Total AC power of all inverters is _____4.43 kW ___ kVA or kW (in whole numbers)

PV Lead Designer: Richard Ordonez ordonez@hawaii.edu

The following information is included in the construction documents.

1. One-Line Electrical schematic. A1/E-601
2. Calculations of service/feeder net computer load and neutral load (NEC 220). A1/E-604
3. Plan view of the lot showing the house, decks, ramps, tour paths, the service point and the distribution panel or load center. A1/E-101, A1/E-106

Energy Analysis Results and Discussion

See Appendix – B Mechanical Calculations for further detailed Energy Calculations.

Energy Analysis 1: A demand-side calculation

Energy Analysis 1 was calculated from the appliances, HVAC, and lighting selection. Lighting and heating were itemized hourly and used the standard daylight values in Washington DC.

Energy consumption over the course of the competition is broken down in ½ hour increments. The energy consumption was calculated using a power average for each appliance over the contest period.

Refrigerator	61ARM	379.5
Freezer	UF-311S	1725
Cook Top	DDP-2	4800
Dish Washer	DD24S	1800
Washer/Dryer	WM3455H	1472
Notebook	QX410-J01	90
LCD 3D TV Class 9000 Series 3D 1080p(55")	UN55C9000ZFXZA	230
3D Blu-Ray Disk Player	BD-C7900	15
7.1 Channel Blu-Ray 3D Home Theater System	HT-C6930W	1330
7.1 Channel Home Theater System	HW-C700	990
LED and Decoder	Strips	180
Geothermal/water source heat pump	Horizontal Model 15	2880
Dehumidifier	65H	660
Multistage Booster Pump	1P879	1560
Fire pump	CR 5-8	2280
Water supply pump	MQ 3-45	1200
WhisperGreen Lite Ventilation Fan	FV-08VKML3	14.9
Solar Thermal Circulating Pump	UP15-18SU LC	85

Solar Thermal Controller	GL-235	60
Solar Thermal Storage Tank with Backup Heating	M40	3800

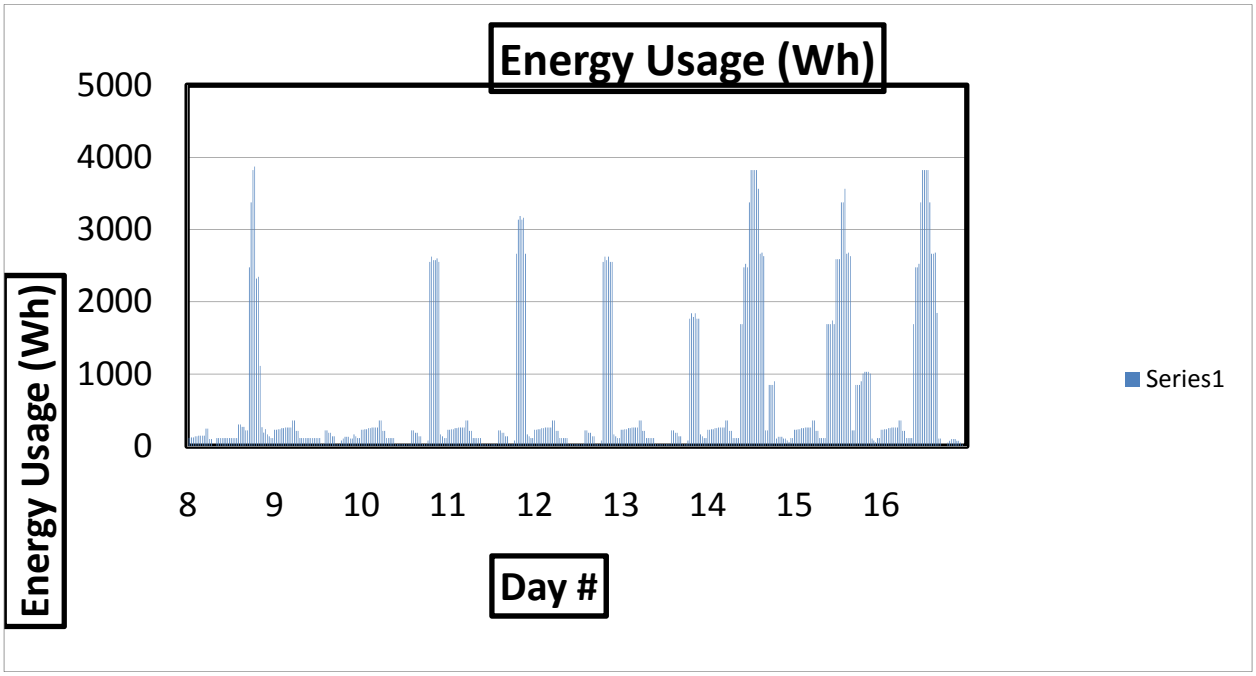

Energy Analysis 2: An energy production calculation.

Refer to one-line diagram, drawing E-602 for breakdown of calculations.

Results:

The total average energy usage per day was found to be 16.8 kWh/day as an upper bound.

Average power production was calculated from using Samsung LPC244SM panels at 15.2% efficiency. Using average, maximum, and minimum solar insulation levels (kWh/day/m^2), total solar isolation was found to be 5.1 kWh/day/m^2 for the contest period in Washington DC. Using this value it was found that total energy production of 26 panels with an area of 1.630 m^2 would be 25.9 kWh/day as an upper bound. This value was in the range of Ecotect simulations as well.

Construction Specifications

Division 01 - General Requirements
01 10 00 Summary
01 30 00 Administrative Requirements
01 40 00 Quality Requirements
01 60 00 Product Requirements
01 74 19 Construction Waste Management and Disposal
Division 05 – Metals
05 05 23 Metal Fastenings
05 12 00 Structural Steel Framing
05 14 00 Structural Aluminum Framing
05 15 16 Steel Wire Rope Assemblies
05 50 00 Metal Fabrications
Division 06 – Wood, Plastics, and Composites
06 05 23 Wood, Plastic, and Composite Fastenings
06 10 00 Rough Carpentry
06 15 00 Wood Decking
06 20 00 Finish Carpentry
06 43 00 Wood Stairs and Railings
06 64 00 Plastic Paneling
06 73 00 Composite Decking
06 80 00 Composite Fabrication
Division 07 – Thermal and Moisture Protection
07 21 00 Thermal Insulation
07 62 00 Sheet Metal Flashing and Trim
07 91 13 Joint Gaskets
07 92 00 Joint Sealants
Division 08 – Openings
08 16 00 Composite Doors
08 35 13 Folding Doors and Grilles
08 70 00 Hardware
08 91 00 Louvers
Division 09 – Finishes
09 62 23 Bamboo Flooring
09 90 00 Painting and Coating
Division 10 – Specialties
10 28 00 Toilet, Bath, and Laundry Accessories
10 44 00 Fire Protection
10 44 16 Fire Extinguisher
Division 11 – Equipment

11 31 00 Residential Appliances

Division 12 – Furnishings

12 21 16 Vertical Louver Blinds
12 31 00 Manufactured Metal Casework

Division 21 – Fire Suppression

21 09 00 Instrumentation and Control for Fire-Suppression Systems
21 13 00 Fire-Suppression Sprinkler Systems
21 24 16 Dry-Chemical Fire-Extinguishing Equipment
21 31 13 Electric-Drive, Centrifugal Fire Pumps
21 41 23 Ground Suction Storage Tanks for Fire-Suppression Water

Division 22 – Plumbing

22 11 16 Domestic Water Piping
22 11 23.26 Close-Coupled, Horizontally Mounted, In-Line Centrifugal-Domestic Water Pumps
22 12 19 Facility Ground-Mounted, Potable-Water Storage Tanks
22 13 16 Sanitary Waste and Vent Piping
22 13 19.36 Air-Admittance Valves
22 13 53 Facility Septic Tanks
22 33 30.23 Residential, Collector-To-Tank, Solar-Electric Domestic Water Heaters
22 41 00 Residential Plumbing Fixtures

Division 23 – Heating, Ventilating, and Air-Conditioning (HVAC)

23 09 23 Direct-Digital Control System for HVAC
23 21 13.43 Thermal Mass Loop Heat-Pump Piping
23 21 23.13 In-Line Centrifugal Hydronic Pumps
23 30 00 HVAC Air Distribution
23 56 13.13 Heating Solar Flat-Plate Collectors
23 71 13.23 Pressurized-Water Thermal Storage Tanks
23 71 13.26 Phase Change Material For Thermal Mass
23 81 46 Water-Source Unitary Heat Pumps
23 84 16 Dehumidifiers

Division 26 – Electrical

26 00 00 Electrical
26 09 13 Electrical Power Monitoring and Control
26 09 23 Lighting Control Devices
26 09 43 Network Lighting Controls
26 30 00 Facility Electrical Power Generating and Storing Equipment

Division 28 – Electronic Safety and Security

28 31 46 Smoke Detection and Sensors

Division 32 – Exterior Improvements

32 80 00 Irrigation

Division 40 – Material Processing and Handling Equipment

41 22 00	Cranes and Hoists
41 62 23	Forklift Trucks
41 65 16	Mobile Generator

DIVISION 01 GENERAL REQUIREMENTS

SECTION 01 10 00
SUMMARY

PART 1 – GENERAL

1.01 PROJECT INFORMATION

A. Project: Hale Pilihonua – University of Hawaii Solar Decathlon House.
   1. Project Location: The National Mall, District of Columbia

B. Owner: University of Hawaii

C. Architect: University of Hawaii Solar Decathlon Team

D. Contractor: University of Hawaii Solar Decathlon Team

E. Structural Engineer: ARUP-San Francisco

F. The work consists of: The design, build, and fabrication of a 650 S.F. net-zero solar powered home.

1.02 WORK RESTRICTIONS

A. Contractor's Use of Premises: During construction, Contractor will have full use of fabrication areas to include but not be limited to: Fabrication areas in the Architecture Building on the University of Hawaii at Manoa Campus; Building 14 of University of Hawaii Honolulu Community College Campus. Contractor's use of premises is limited only by Owner's right to perform work or employ other contractors on portions of the Project.
   1. Owner will occupy premises during construction. Perform construction both during and outside of Owner's normal working hours (8 AM to 5 PM) Monday thru Friday, other than holidays), unless otherwise agreed to in advance by Owner. Clean up work areas and return to usable condition at the end of each work period.
   2. Driveways, Walkways, and Entrances: Keep driveways, parking areas, loading areas and entrances serving premises clear and available to Owner, Owner's employees, and emergency vehicles at all times. Do not use these areas for parking or storage of materials.

B. Nonsmoking Building: Smoking is not permitted within the building or within 20 feet (7 m) of entrances, operable windows, or outdoor-air intakes.

PART 2 – PRODUCTS (Not Used)

PART 3 – EXECUTION (Not Used)

END OF SECTION

SECTION 01 30 00
ADMINSTRATIVE REQUIREMENTS

PART 1 – GENERAL

1.01 PROJECT MANAGEMENT AND COORDINATION

A. Coordinate construction operations included in different Sections of the Specifications to ensure efficient and orderly installation of each part of the Work.

B. Schedule and conduct progress meetings at Project site at weekly intervals. Notify Owner and Architect of meeting dates and times. Require attendance of each subcontractor or other entity concerned with current progress or involved in planning, coordination, or performance of future activities.
   1. Record minutes and distribute to everyone concerned, including Owner and Architect.

1.02 SUBMITTAL ADMINISTRATIVE REQUIREMENTS

A. Coordinate each submittal with fabrication, purchasing, testing, delivery, other submittals, and related activities that require sequential activity.
   1. No extension of the Contract Time will be authorized because of failure to transmit submittals enough in advance of the Work to permit processing, including re-submittals.
   2. Submit three copies of each action submittal. Architect will return two copies.
   3. Submit two copies of each informational submittal. Architect will not return copies.
   4. Architect will discard received from sources other than Contractor.

B. Place a permanent label or title block on each submittal for identification. Provide a space approximately 6 by 8 inches on label or beside title block to record Contractor's review and approval markings and action taken by Architect. Include the following information on the label.
   1. Project name.
   2. Date.
   3. Name and address of Contractor.
   4. Name and address of subcontractor or supplier.
   5. Number and title of appropriate Specification Section.

C. Identify deviations from the Contract Documents on submittals.

D. Contractor's Construction Schedule Submittal Procedure: Submit two copies of schedule within 10 days after date established for Commencement of the Work.

PART 2 – PRODUCTS

2.01 ACTION SUBMITTALS

A. Product Data: Mark each copy to show applicable products and options. Include the following:
   1. Manufacturer's written recommendations, product specifications, and installation instructions.
   2. Wiring diagrams showing factory-installed wiring.
   3. Printed performance curves and operational range diagrams.
   4. Testing by recognized testing agency.
   5. Compliance with specified standards and requirements.

B. Shop Drawings: Prepare Project-specific information, drawn accurately to scale. Do not base Shop Drawings on reproductions of the Contract Documents or standard printed data. Submit on sheets at least 8-1/2 by 11 inches (215 by 280 mm) but no larger than 30 by 42 inches (762 by 1067 mm). Include the following:
   1. Dimensions and identification of products.
   2. Fabrication and installation drawings and roughing-in and setting diagrams.
   3. Wiring diagrams showing field-installed wiring.
   4. Notation of coordination requirements.
   5. Notation of dimensions established by field measurement.

C. Samples: Submit Samples for review of kind, color, pattern, and texture and for a comparison of these characteristics between submittal and actual component as delivered and installed. Include name of manufacturer and product name on label.
   1. If variation is inherent in material or product, submit at least 3 sets of paired units that show variations.

2.02 INFORMATIONAL SUBMITTALS

A. Qualification Data: Include lists of completed projects with project names and addresses, names and addresses of architects and owners, and other information specified.

B. Product Certificates: Prepare written statements on manufacturer's letterhead certifying that product complies with requirements in the Contract Documents.

2.03 DELEGATED DESIGN SERVICES

A. Performance and Design Criteria: Where professional design services or certifications by a design professional are specifically required of Contractor by the Contract Documents, provide products and systems complying with specific performance and design criteria indicated.
   1. If criteria indicated are not sufficient to perform services or certification required, submit a written request for additional information to Architect.

B. Product Certificates: Prepare written statements on manufacturer's letterhead certifying that product complies with requirements in the Contract Documents.
   1. Indicate that products and systems comply with performance and design criteria in the Contract Documents. Include list of codes, loads, and other factors used in performing these services.

2.04 CONTRACTOR'S CONSTRUCTION SCHEDULE

A. Gantt-Chart Schedule: Submit a comprehensive, fully developed, horizontal Ganttchart-type schedule within 30 days of date established for commencement of the Work.

B. Preparation: Indicate each significant construction activity separately. Identify first workday of each week with a continuous vertical line.

PART 3 – EXECUTION

3.01 SUBMITTAL REVIEW

A. Review each submittal and check for coordination with other Work of the Contract and for compliance with the Contract Documents. Note corrections and field dimensions. Mark with approval stamp before submitting to Architect.

B. Architect will review each action submittal, make marks to indicate corrections or modifications required will stamp each submittal with an action stamp and will mark stamp appropriately to indicate action.

C. Submittals not required by the Contract Documents may not be reviewed and may be discarded.

3.02 CONTRACTOR'S CONSTRUCTION SCHEDULE

A. Updating: At weekly intervals, update schedule to reflect actual construction progress and activities. Issue schedule 1 day before each regularly scheduled progress meeting.
   1. As the Work progresses, indicate Actual Completion percentage for each activity.

B. Distribute copies of approved schedule to Owner, Architect, subcontractors, testing and inspecting agencies, and parties identified by Contractor with a need-to-know schedule responsibility. When revisions are made, distribute updated schedules to the same parties.

END OF SECTION

SECTION 01 40 00
QUALITY REQUIREMENTS

PART 1 – GENERAL

1.01 SUMMARY

A. Testing and inspecting services are required to verify compliance with requirements specified or indicated. These services do not relieve Contractor of responsibility for compliance with the Contract Document requirements.
   1. Testing and inspecting services shall be performed by independent testing agencies.

B. Referenced Standards: If compliance with two or more standards is specified and the standards establish different or conflicting requirements, comply with the most stringent requirement. Refer uncertainties to Architect for a decision.

C. Minimum Quantity or Quality Levels: The quantity or quality level shown or specified shall be the minimum. The actual installation may exceed the minimum within reasonable limits. Indicated numeric values are minimum or maximum, as appropriate, for the context of requirements. Refer uncertainties to Architect for a decision.

D. Test and Inspection Reports: Prepare and submit certified written reports specified in other Sections. Include the following:
   1. Date of issue.
   2. Project title and number.
      Name, address, and telephone number of testing agency.
   3. Dates and locations of samples and tests or inspections.
   4. Record of temperature and weather conditions at time of sample taking and testing and inspecting.
   5. Names of individuals making tests and inspections.
   6. Description of the Work and test and inspection method.
   7. Complete test or inspection data, test and inspection results, an interpretation of test results, and comments or professional opinion on whether tested or inspected Work complies with the Contract Document requirements.
   8. Name and signature of laboratory inspector.
   9. Recommendations on retesting and re-inspecting.

E. Permits, Licenses, and Certificates: For Owner's records, submit copies of permits, licenses, certifications, inspection reports, notices, receipts for fee payments, and similar documents, established for compliance with standards and regulations bearing on performance of the Work.

F. Testing Agency Qualifications: An independent agency with the experience and capability to conduct testing and inspecting indicated; and where required by authorities having jurisdiction, that is acceptable to authorities.

G. Retesting/Re-inspecting: Regardless of whether original tests or inspections were Contractor's responsibility, provide quality-control services, including retesting and re-inspecting, for construction that replaced Work that failed to comply with the Contract Documents.

H. Testing Agency Responsibilities: Cooperate with Architect and Contractor in performance of duties. Provide qualified personnel to perform required tests and inspections.
   1. Promptly notify Architect and Contractor of irregularities or deficiencies in the Work observed during performance of its services.
   2. Do not release, revoke, alter, or increase requirements of the Contract Documents or approve or accept any portion of the Work.
   3. Do not perform any duties of Contractor.

I. Associated Services: Cooperate with testing agencies and provide reasonable auxiliary services as requested. Provide the following:
   1. Access to the Work.
   2. Incidental labor and facilities necessary to facilitate tests and inspections.
   3. Adequate quantities of representative samples of materials that require testing and inspecting. Assist agency in obtaining samples.
   4. Facilities for storage and field curing of test samples.
   5. Security and protection for samples and for testing and inspecting equipment.

J. Coordination: Coordinate sequence of activities to accommodate required quality-assurance and -control services with a minimum of delay and to avoid necessity of removing and replacing construction to accommodate testing and inspecting.
   1. Schedule times for tests, inspections, obtaining samples, and similar activities.

PART 2 – PRODUCTS (Not Used)

PART 3 – EXECUTION (Not Used)

END OF SECTION

SECTION 01 60 00
PRODUCT REQUIREMENTS

PART 1 – GENERAL

1.01 SUMMARY

A. The term "product" includes the terms "material," "equipment," "system," and terms of similar intent.

B. Comparable Product Requests:
   1. Submit request for consideration of each comparable product. Do not submit unapproved products on Shop Drawings or other submittals.
   2. Identify product to be replaced and show compliance with requirements for comparable product requests. Include a detailed comparison of significant qualities of proposed substitution with those of the Work specified.
   3. Architect will review the proposed product and notify Contractor of its acceptance or rejection.

C. Basis-of-Design Product Specification Submittal: Show compliance with requirements.

D. Compatibility of Options: If Contractor is given option of selecting between two or more products, select product compatible with products previously selected.

E. Deliver, store, and handle products using means and methods that will prevent damage, deterioration, and loss, including theft. Comply with manufacturer's written instructions.
   1. Schedule delivery to minimize long-term storage at Project site and to prevent overcrowding of construction spaces.
   2. Deliver products to Project site in manufacturer's original sealed container or packaging, complete with labels and instructions for handling, storing, unpacking, protecting, and installing.
   3. Inspect products on delivery to ensure compliance with the Contract Documents and to ensure that products are undamaged and properly protected.
   4. Store materials in a manner that will not endanger Project structure.
   5. Store products that are subject to damage by the elements, under cover in a weather tight enclosure above ground, with ventilation adequate to prevent condensation.

F. Warranties specified in other Sections shall be in addition to, and run concurrent with, other warranties required by the Contract Documents. Manufacturer's disclaimers and limitations on product warranties do not relieve Contractor of obligations under requirements of the Contract Documents.

PART 2 – PRODUCTS

2.01 PRODUCT SELECTION PROCEDURES

A. Provide products that comply with the Contract Documents, are undamaged, and are new at the time of installation.
   1. Provide products complete with accessories, trim, finish, and other devices and components needed for a complete installation and the intended use and effect.
   2. Descriptive, performance, and reference standard requirements in the Specifications establish salient characteristics of products.

B. Product Selection Procedures:
   1. Where Specifications name a single manufacturer and product, provide the named product that complies with requirements.
   2. Where Specifications name a single manufacturer or source, provide a product by the named manufacturer or source that complies with requirements.
   3. Where Specifications include a list of names of both manufacturers and products, provide one of the products listed that complies with requirements. Comparable products or substitutions for Contractor's convenience will be considered.
   4. Where Specifications include a list of names of both available manufacturers and products, provide one of the products listed, or an unnamed product, that complies with requirements. Comply with requirements for "comparable product requests" for consideration of an unnamed product.
   5. Where Specifications include a list of manufacturers' names, provide a product by one of the manufacturers listed that complies with requirements. Comparable products or substitutions for Contractor's convenience will be considered.
   6. Where Specifications include a list of available manufacturers, provide a product by one of the manufacturers listed, or a product by an unnamed manufacturer, that complies with requirements. Comply with requirements for "comparable product requests" for consideration of an unnamed manufacturer's product.
   7. Where Specifications name a single product, or refer to a product indicated on Drawings, as the "basis-of-design," provide the named product. Comply with provisions for "comparable product requests" for consideration of an unnamed product by another manufacturer.

C. Where Specifications require "match Architect's sample," provide a product that complies with requirements and matches Architect's sample. Architect's decision will be final on whether a proposed product matches.

D. Unless otherwise indicated, Architect will select color, gloss, pattern, density, or texture from manufacturer's product line that includes both standard and premium items.

PART 3 – EXECUTION (Not Used)

END OF SECTION

SECTION 01 74 19
CONSTRUCTUION AND WASTE MANAGEMENT

PART 1 – GENERAL

1.01 SECTION REQUIREMENTS

A. Performance Requirements: Achieve end-of-Project rates for salvage/recycling of 75 percent by weight of total nonhazardous solid waste generated by the Work.

1.02 SUBMITTALS

A. Waste Management Plan: Submit plan within 30 days of date established for commencement of the Work.

B. Waste Reduction Progress Reports: Submit concurrent with each Application for Payment. Include total quantity of waste, total quantity of waste salvaged and recycled, and percentage of total waste salvaged and recycled.

C. Records of Donations and Sales: Receipts for salvageable waste donated or sold to individuals and organizations. Indicate whether organization is tax exempt.

D. Recycling and Processing Facility Records: Manifests, weight tickets, receipts, and invoices.

E. Landfill and Incinerator Disposal Records: Manifests, weight tickets, receipts, and invoices.

F. Waste Management Conference: Conduct conference at Project site to comply with requirements in Division 01 Section "Administrative Requirements." Review methods and procedures related to waste management.

G. Waste Management Plan: Develop a waste management plan consisting of waste identification, waste reduction work plan, and cost/revenue analysis. Indicate quantities by weight or volume, but use same units of measure throughout waste management plan.
   1. Salvaged Materials for Reuse: Identify materials that will be salvaged and reused.
   2. Salvaged Materials for Sale: Identify materials that will be sold to individuals and organizations, include list of their names, addresses, and telephone numbers.
   3. Salvaged Materials for Donation: Identify materials that will be donated to individuals and organizations, include list of their names, addresses, and telephone numbers.
   4. Recycled Materials: Include list of local receivers and processors and type of recycled materials each will accept. Include names, addresses, and telephone numbers.
   5. Cost/Revenue Analysis: Indicate total cost of waste disposal as if there was no waste management plan and net additional cost or net savings resulting from implementing waste management plan.

PART 2 – PRODUCTS (Not Used)

PART 3 – EXECUTION

3.01 PLAN IMPLEMENTATION

A. General: Implement approved waste management plan. Provide handling, containers, storage, signage, transportation, and other items as required to implement waste management plan during the entire duration of the Contract.

B. Training: Train workers, subcontractors, and suppliers on proper waste management procedures, as appropriate for the Work occurring at Project site.

C. Distribute waste management plan to entities when they first begin work on-site. Review plan procedures and locations established for salvage, recycling, and disposal.

3.02 RECYCLING WASTE.

A. General: Recycle paper and beverage containers used by on-site workers.

B. Packaging:
1. Cardboard and Boxes: Break down packaging into flat sheets. Bundle and store in a dry location.
2. Polystyrene Packaging: Separate and bag materials.
3. Pallets: As much as possible, require deliveries using pallets to remove pallets from Project site. For pallets that remain on-site, break down pallets into component wood pieces and comply with requirements for recycling wood.
4. Crates: Break down crates into component wood pieces and comply with requirements for recycling wood.

C. Wood Materials: Sort and stack members according to size, type, and length. Separate lumber, engineered wood products, panel products, and treated wood materials.

D. Metals: Separate metals by type.

E. Piping: Reduce piping to straight lengths and store by type and size. Separate supports, hangers, valves, sprinklers, and other components by type and size.

F. Conduit: Reduce conduit to straight lengths and store by type and size.

3.03 DISPOSAL OF WASTE

A. Except for items or materials to be salvaged, recycled, or otherwise reused, remove waste materials from Project site and legally dispose of them in a landfill or incinerator acceptable to authorities having jurisdiction.

B. Do not burn waste materials.

END OF SECTION

DIVISION 05 METALS

SECTION 05 05 23
METAL FASTENINGS

PART 1 – GENERAL

1.01 SUMMARY

A. Section includes:
   1. Miscellaneous Screws and Bolts

B. Related Requirements
   1. Section 06 10 00: Rough Carpentry.
   2. Section 06 15 00: Wood Decking.
   3. Section 06 20 00: Finished Carpentry.

1.02 SUBMITTALS

A. Data Specification Sheets.

PART 2 – PRODUCTS

2.01 MANUFACTURER

A. Crown Bolt
   http://www.crownbolt.com/home/default.asp

2.01 MATERIALS

A. Anchor Bolts:
   1. ASME B18.2.1 and ANSI B18.2.2 galvanized, 13 mm (1/2 inch) unless shown otherwise.
   2. Washers:
      a. Hot dip galvanized

B. Steel Bolts:
   1. 1/2" Bolts & Nuts
   2. 3/4" Bolts & Nuts
   3. 7/8" Bolts & Nuts

C. Screws:
   1. Wood to Wood: ANSI B18.6.1 or ASTM C1002.
   2. Wood to Steel: ASTM C954, or ASTM C1002.

PART 3 – EXECUTION

3.01 EXAMINATION

A. Hardware must fit snug into openings, do not use if loose or too tight.

B. Do not install stripped or damaged hardware.

3.02 INSTALLATION

A. Separate dissimilar metals and metal products from contact with wood materials, by painting each metal surface in area of contact with a bituminous coating or by other permanent separation.

B. Repair, refinish, or replace damaged during installation, as directed by Architect.

END OF SECTION

SECTION 05 12 00
STRUCTURAL STEEL FRAMING

PART 1 – GENERAL

1.01 SUMMARY

A. This section specifies structural steel shown and classified by Section 2, Code of Standard Practice for Steel Buildings and Bridges.

1.02 QUALITY ASSURANCE

A. Fabricator and erector shall maintain a program of quality assurance in conformance with Section 8, Code of Standard Practice for Steel Buildings and Bridges. Work shall be fabricated in an AISC certified Category Conventional Steel Structures fabrication plant.

B. Before authorizing the commencement of steel erection, the controlling contractor shall ensure that the steel erector is provided with the written notification required by 29 CFR 1926.752. Provide copy of this notification to the Resident Engineer.

1.03 TOLERANCES

A. Fabrication tolerances for structural steel shall be held within limits established by ASTM A6, by Section 7, Code of Standard Practice for Buildings and Bridges, and by Standard Mill Practice - General Information (AISC ASD Manual, Ninth Edition, Page 1-145 // LRFD Manual, Second Edition, Page 1-183 //), except as follows:
   1. Elevation tolerance for top surface of steel beams and girders at connections to columns at time floor is erected is 13 mm (1/2 inch).

1.04 DESIGN

A. Connections: Design and detail all connections for each member size, steel grade and connection type to resist the loads and reactions indicated on the drawings or specified herein. Use details consistent with the details shown on the Drawings, supplementing where necessary. The details shown on the Drawings are conceptual and do not indicate the required weld sizes or number of bolts unless specifically noted. Use rational engineering design and standard practice in detailing, accounting for all loads and eccentricities in both the connection and the members. Promptly notify the Resident Engineer of any location where the connection design criteria is not clearly indicated. The design of all connections is subject to the review and acceptance of the Resident Engineer. Submit structural calculations prepared and sealed by a qualified

engineer registered in the state where the project is located. Submit calculations for review before preparation of detail drawings.

1.05 REGULATORY REQUIREMENTS:

A. AISC: Specification for Structural Steel Buildings - Allowable Stress Design.

B. AISC: Code of Standard Practice for Steel Buildings and Bridges.

1.06 SUBMITTALS

A. Submit in accordance with Section 01 30 00, ADMINSTRATIVE REQUIREMENTS

B. Shop and Erection Drawings: Complete

C. Certificates:
   1. Structural steel.
   2. Steel for all connections.
   3. Welding materials.
   4. Shop coat primer paint.

D. Test Reports:
   1. Welders' qualifying tests.

E. Design Calculations and Drawings:
   1. Connection calculations, if required.

F. Record Surveys.

1.07 APPLICABLE PUBLICATIONS:

A. Publications listed below form a part of this specification to extent referenced. Publications are referenced in text by basic designation only.

B. American Institute of Steel Construction (AISC):

   1. Specification for Structural Steel Buildings - Allowable Stress Design and Plastic Design (Ninth Edition, 1989)
   2. Load and Resistance Factor Design Specification for Structural Steel Buildings (Second Edition, 1995)
   3. Code of Standard Practice for Steel Buildings and Bridges (March 2000).

C. American National Standards Institute (ANSI):

1. B18.22.1-98: Plain Washers
2. B18.22M-00: Metric Plain Washers

D. American Society for Testing and Materials (ASTM):

1. A6/A6M-02 Standard Specification for General Requirements for Rolled Structural Steel Bars, Plates, Shapes, and Sheet Piling
2. A36/A36M-01 Standard Specification for Carbon Structural Steel
3. A53/A53M-01 Standard Specification for Pipe, Steel, Black and Hot-Dipped, Zinc-Coated Welded and Seamless
4. A123/A123M-02 Standard Specification for Zinc (Hot-Dip Galvanized) Coatings on Iron and Steel Products
5. A242/A242M-01 Standard Specification for High-Strength Low-Alloy Structural Steel
6. A283/A283M-00 Standard Specification for Low and Intermediate Tensile Strength Carbon Steel Plates
7. A307-00 Standard Specification for Carbon Steel Bolts and Studs, 60,000 psi Tensile Strength
8. A325-02 Standard Specification for Structural Bolts, Steel, Heat Treated, 120/105 ksi Minimum Tensile Strength
9. A490-02 Standard Specification for Heat-Treated Steel Structural Bolts 150 ksi Minimum Tensile Strength
10. A500-01 Standard Specification for Cold Formed Welded and Seamless Carbon Steel Structural Tubing in Rounds and Shapes
11. A501-01 Standard Specification for Hot-Formed Welded and Seamless Carbon Steel Structural Tubing
12. A572/A572M-01 Standard Specification for High-Strength Low-Alloy Columbium-Vanadium Structural Steel
13. A992/A992M-02 Standard Specification for Structural Steel Shapes

E. American Welding Society (AWS):

1. D1.1-02 Structural Welding Code-Steel

F. Research Council on Structural Connections (RCSC) of The Engineering Foundation:

1. Specification for Structural Joints Using ASTM A325 or A490 Bolts

G. Occupational Safety and Health Administration (OSHA):

1. 29 CFR Part 1926-2001 Safety Standards for Steel Erection

PART 2 – PRODUCTS

2.01 STRUCTURAL STEEL

A. Angles, channels, & Tees: ASTM A36.

B. Plate and Bar: ASTM A36

C. Hollow Structural Section: ASTM A500, Grade B Structural Tubing

D. Structural Tubing: ASTM A501.

E. Steel Pipe: ASTM A53 Type E or S (welded or seamless), Grade B.

2.02 ACCESSORIES

A. Bolts, Nuts and Washers:
   1. Bolts and nuts, other than high-strength: ASTM A307, Grade A. Provide hexagonal head bolt heads and self-locking nuts.
   2. Plain washers, other than those in contact with high-strength bolt heads and nuts: ANSI Standard B18.22.1.

B. Threaded Rod: ASTM A36.

C. Zinc Coating: ASTM A123.

D. Galvanizing Repair Paint: Mil. Spec. MIL-P-21035.

PART 3 - EXECUTION

3.01 CONNECTIONS (SHOP AND FIELD)

A. Welding: Welding in accordance with AWS D1.1. Welds shall be made only by welders and welding operators who have been previously qualified by tests as prescribed in AWS D1.1 to perform type of work required.

B. Welding Material: Filler material requirements shall conform to AWS D1.1 and AISC "Specification for Structural Steel Buildings". Minimum classified tensile strength of 70ksi (E70). Use low hydrogen electrodes as defined by AWS D1.1.

C. Bolts: Bolts shall be brought to a snug, tight condition.

D. Bolt holes shall be drilled or punched at right angles to the surface of the metal. Bolt holes shall not be more than 1/16-inch larger than bolt diameter, unless otherwise noted.

E. Bolts shall be of a length that will extend entirely through but not more than ¼-inch beyond the nut. Washers shall be used on all bolts.

3.02 FABRICATION

A. Fabrication in accordance with Chapter M, Specification for Steel Buildings - Allowable Stress Design and Plastic Design.

3.03 SHOP PAINTING

A. General: Shop paint steel with primer in accordance with Section 6, Code of Standard Practice for Steel Buildings and Bridges.

B. Shop paint for steel surfaces is specified in Section 09 90 00, PAINTING AND COATING.

C. Do not apply paint to following:
   1. Surfaces within 50 mm (2 inches) of joints to be welded in field.
   2. Surfaces which will be encased in concrete.
   3. Surfaces which will receive sprayed on fireproofing.
   4. Top flange of members which will have shear connector studs applied.

D. Zinc Coated (Hot Dip Galvanized) per ASTM A123 (after fabrication): Touch-up after erection: Clean and wire brush any abraded and other spots worn through zinc coating, including threaded portions of bolts and welds and touch-up with galvanizing repair paint.

3.04 ERECTION

A. General: Erection in accordance with Section 7, Code of Standard Practice for Steel Buildings and Bridges.

B. Temporary Supports: Temporary support of structural steel frames during erection in accordance with Section 7, Code of Standard Practice for Steel Buildings and Bridges.

3.05 FIELD PAINTING:

A. After erection, touch-up steel surfaces specified to be shop painted. After welding is completed, clean and prime areas not painted due to field welding.

B. Interior primer paint: SSPC Paint Specification No. 13; conforming to federal, state, and local VOC regulators; containing no lead or chromates.

C. Exterior primer paint: SSPC Paint Specification No. 20 zinc-rich primer.

D. All steel surfaces shall be cleaned per SSPC-SP1 "Solvent Cleaning" to remove oil and grease prior to any other surface preparation. Ease all corners of plates and shapes to receive exterior primer to 1/16-inch chamfer.

E. After fabrication, prepare steel surfaces to be galvanized in accordance with SSPC-SP2 "Hand Tool Cleaning". After fabrication, prepare steel surfaces to receive interior primer in accordance with the SSPC-SP3 "Power Tool Cleaning". After fabrication, prepare steel surfaces to receive exterior primer in accordance with the SSPC-SP6 "Commercial Blast Cleaning".

F. Apply interior primer at 2.0 mils minimum dry film thickness. Apply exterior primer at 3.0 mils minimum dry film thickness.

G. Hot dip galvanize all steel items exposed to the exterior and all fasteners connected to galvanized components. Galvanize steel members in accordance with ASTM A123; and bolts, nuts and washers in accordance with ASTM A153. Touch up galvanized surfaces in accordance with ASTM A780.

H. Finish painting of steel surfaces is specified in Section 09 90 00, PAINTING AND COATING

3.06 SURVEY

A. Upon completion of finish bolting or welding on any part of the work, and prior to start of work by other trades that may be supported, attached, or applied to the structural steel work, submit a certified report of survey to Structural Engineer for approval. Report shall specify that location of structural steel is acceptable for plumbness, level and alignment within specified tolerances specified in the AISC Manual.

END OF SECTION

SECTION 05 14 00
STRUCTURAL ALUMINUM FRAMING

PART 1 – GENERAL

1.01 SUMMARY

A. Section includes aluminum angle and aluminum rectangular bar.

1.02 REFERENCES

A. Product: 6061-T6 Structural Aluminum Angle
   1. ASTM International
      a. ASTM B 221

B. Product: 6061 –T6511 Rectangular Aluminum Bar
   1. ASTM International
      a. ASTM B 221

1.03 SUBMITTALS

A. Manufacturer product data sheets.

PART 2 – PRODUCTS

2.01 MANUFACTURER

A. Alaskan Copper & Brass Company
   1333 30th Street, Suite A
   San Diego, California, 92154-3404
   Tel: (619) 423-2546
   Fax: (619) 423-5310
   Email: abscan@alaskancopper.com
   http://www.alaskancopper.com/index.php

2.02 MATERIALS

A. Aluminum

1. 6061-T6 Structural Aluminum Angle
2. 1/8" x 2-3/8" 6061 –T6511 Rectangular Aluminum Bar
3. 3/16" x 2-3/4" 6061 –T6511 Rectangular Aluminum Bar

PART 3 – EXECUTION

3.01 INSTALLATION

A. Comply with manufacturers installation instructions.

END OF SECTION

SECTION 05 15 16
STEEL WIRE ROPE ASSEMBLIES

PART 1 – GENERAL

1.01 SUMMARY

A. Section includes:
   1. Wire Rope and fittings for wire rope assembly.

1.02 SUBMITTALS

A. Manufacturers' product data sheets.

B. Submit in accordance with Section 01 30 00, ADMINSTRATIVE REQUIREMENTS

C. Design Calculations and Drawings
   1. Connection calculations, if required

PART 2 – PRODUCTS

2.01 MANUFACTURERS

A. The Crosby Group LLC
   2801 Dawson Road
   Tulsa, OK 74101
   Tel: (918) 834-4611
   Fax: (918) 832-8833
   http://www.thecrosbygroup.com/

B. Hayn Enterprises, LLC
   51 Inwood Road
   Rocky Hill, CT 06067 USA
   Tel: (808) 346-4296
   (860) 257-0680
   Fax: (800) 441-4296
   (860) 257-0683
   Email: sales@hayn.com
   http://hayn.com/cables/index.html

C. Kisswire Ltd.
475 Mangmi-2dong,
Sooyoung-ku, Busan, Korea
Tel: (051) 760-1700
Fax: (051) 757-7379
http://www.kiswire.com/english/index.html

2.02 MATERIALS

A. Galvanized Steel Wire Rope
1. Sizes: 1/8", 1/4", and 5/16"

B. Fittings:
1. Galvanized Steel: 1/4" and 5/16" The Crosby Group S-501 Open Swage Sockets Jaw turnbuckles
2. Galvanized Steel 1/4" and 5/16" The Crosby Group S-502 Closed Swage Sockets
3. Galvanized Steel 1/4"x4" & 5/16"x4-1/2" HG-228 Jaw & Jaw Turnbuckles
4. Stainless Steel, Grade 316 1/8" Hayn Enterprises, Inc ST06A18 Stud Tensioning Internal Adjuster
5. Stainless Steel, Grade 316 3/4" Hayn Enterprises, Inc AJB Adjust-A-Ball Fitting
6. Stainless Steel, Grade 316 1/8" Hayn Enterprises, Inc 14TTCLL18 Jaw to Swage Lifeline Turnbuckle – Closed Tubular TT Series with Handy Crimp Stud
7. Stainless Steel, Grade 316 1/8" Hayn Enterprises, Inc 14TJCLL18 Lifeline Toggle Jaw – Forged T-Bolt
8. Stainless Steel, Grade 316 1/8" Hayn Enterprises, Inc Wire Rope Clip

2.03 COMPONENTS

A. Custom Cable Fittings and Assemblies for 1/4" cables:
1. Cable: 1/4" (6.4 mm) diameter, 1x19 construction, Type Galvanized steel
2. Fittings: 1/4" S-501 Open Swage Sockets Jaw turnbuckles, 1/4" S-502 Closed Swage Sockets, 1/4"x4" HG-228 Jaw & Jaw Turnbuckles, and 1/4" G-450 Crosby Clips

B. Custom Cable Fittings and Assemblies for 5/16" cables:
1. Cable: 5/16", Galvanized steel
2. Fittings: 5/16" S-501 Open Swage Sockets Jaw turnbuckles, 5/16" S-502 Closed Swage Sockets, 5/16"x4-1/2" HG-228 Jaw & Jaw Turnbuckles, and 5/16" G-450 Crosby Clips

C. Custom Cable Fittings and Assemblies for 1/8" cables to be installed on the ramp:
   1. Cable: 1/8" (3.2 mm) diameter, 1x19 construction, Type Galvanized steel
   2. Fittings: 1/8" Hayn Enterprises, Inc ST06A18 Stud Tensioning Internal Adjuster and 3/4" Hayn Enterprises, Inc AJB Adjust-A-Ball Fitting

D. Custom Cable Fittings and Assemblies for 1/8" cables to be installed on the west guardrail:
   1. Cable: 1/8" (3.2 mm) diameter, 1x19 construction, Type Galvanized steel
   2. Fittings: 1/8" Hayn Enterprises, Inc 14TTCLL18 Jaw to Swage Lifeline Turnbuckle – Closed Tubular TT Series with Handy Crimp Stud, Hayn Enterprises, Inc 14TJCLL18 Lifeline Toggle Jaw – Forged T-Bolt, and 1/8" Hayn Enterprises, Inc Wire Rope Clip

PART 3 – EXECUTION

3.01 INSTALLATION

A. Comply with manufacturers' installation instructions
B. Comply with structural loading requirements.

END OF SECTION

SECTION 05 50 00
METAL FABRICATIONS

PART 1 – GENERAL

1.01 SUMMARY

A. Section includes:
1. Shower pan.

1.02 SUBMITTALS:

A. Manufacturer product data sheets

PART 2 – PRODUCTS

2.01 MANUFACTURER

A. Oceania Baths inc.
591, avenue des Entreprises
Thetford Mines (Quebec)
Canada, G6H 4B2
Tel: 1-888-851-8918
1-877-332-4224
Fax: 1-877-880-8918
1-866-460-4334
www.oceaniabaths.com

2.02 MATERIALS

A. Stainless Steel: 16 Gauge, Grade 304

2.03 SHOWER PAN

A. Fabricate the shower pan to have two slopes to the center drain:
1. Slope for Length of shower pan: 1 degrees
2. Slope for Width of shower pan: 1.9 degrees

PART 3 – EXECUTION

3.01 EXAMINATION

A. Examine roughing-in for plumbing, mechanical, and electrical services, with Installer present, to verify actual locations of services before pan installation.
   1. Proceed with installation only after unsatisfactory conditions have been corrected

3.02 INSTALLATION

A. Comply with manufacturers installation instructions.

END OF SECTION

DIVISION 06 WOOD, PLASTICS, AND COMPOSITES

SECTION 06 05 23
WOOD, PLASTIC, AND COMPOSITE FASTENINGS

PART 1 - GENERAL

1.01 SUMMARY

A. Section includes:
1. Structural Glazing Tape.

B. Related Requirements
1. Section 06 08 00: Composite Fabrications.

1.02 APPLICATION REQUIREMENTS

A. All 3M VHB Structural Glazing Tape projects must be reviewed on a project-specific basis by a 3M representative to begin the structural glazing process. 3M VHB Structural Glazing Tape Sales and Technical Service Representatives are available to assist the customer to determine the suitability of 3M VHB Structural Glazing Tape for structural glazing applications.

1.03 SUBMITTALS

A. Manufacturer product data sheets.

1.04 STORAGE

A. Storage: Store in original cartons at 21°C (70°F) and 50% relative humidity.

B. Shelf Life: When stored under proper conditions, product retains its performance and properties for 24 months from date of manufacture.

1.05 WARRANTY

A. Limited Time Warranty: 3M warrants for 24 months from the date of manufacture that 3M VHB Tape will be free of defects in material and manufacture. 3M MAKES NO OTHER WARRANTIES, EXPRESS OR IMPLIED, INCLUDING BUT NOT LIMITED TO, ANY IMPLIED WARRANTY OF MERCHANTABILITY OR FITNESS FOR A PARTICULAR PURPOSE. This limited warranty does not cover damage resulting from the use or inability to use 3M VHB Tape due to misuse, workmanship in application, or application or storage not in accordance with 3M recommended procedures. AN APPLICATION WARRANTY EXPRESSLY APPROVED AND ISSUED BY 3M IS AN EXCEPTION. THE CUSTOMER MUST APPLY FOR A SPECIFIC APPLICATION WARRANTY AND MEET ALL WARRANTY AND PROCESS REQUIREMENTS TO OBTAIN AN APPLICATION WARRANTY. CONTACT 3M FOR MORE INFORMATION ON APPLICATION WARRANTY TERMS AND CONDITIONS.

B. Limitation of Remedies and Liability: If the 3M VHB Tape is proved to be defective within the warranty period stated above. THE EXCLUSIVE REMEDY, AT 3M'S OPTION, SHALL BE TO REFUND THE PURCHASE PRICE OF OR TO REPAIR OR REPLACE THE DEFECTIVE 3M™ VHB™ TAPE. 3M shall not otherwise be liable for loss or damages, whether direct, indirect, special, incidental, or consequential, regardless of the legal theory asserted, including negligence, warranty, or strict liability.

PART 2 – PRODUCTS

2.01 MANUFACTURER

A. 3M Industrial Adhesives and Tapes Division
3M Center, Building 225-3S-06
St. Paul, MN 55144-1000
Phone: 800-362-3550
Fax: 877-369-2923
www.3M.com/industrial

2.02 MATERIALS

A. 3M VHB Structural Glazing Tape.
1. is a high performance double-coated pressure sensitive acrylic foam tape. Application history since 1990 and 3rd party test results demonstrate the outstanding performance, durability, UV and temperature resistance of 3M VHB Tape acrylic foam chemistry.

2.03 DESIGN CRITERIA

A. For tape area calculation the following guidelines can be used. Please ensure that each project is reviewed and approved by local 3M Technical Service.

B. Tape Design Strength for Dynamic Loads (deadload support): For dynamic tensile or shear stress such as wind loads, a design strength of 85 kPa (12 psi) is used for 3M™ VHB™ Structural Glazing Tape. This design strength guideline provides a safety factor of at least 5 and was established based on material property testing as well as ASTM dynamic load testing for curtain wall applications.

C. Tape Design Strength for Static Loads (no deadload support): For static tensile or shear stress such as dead weight loads, snow loads and other long-term loads, a design strength of 1.7 kPa (0.25 psi) is used for 3M™ VHB™ Structural Glazing Tape. This means 60 cm2 of tape per 1 kg or 4 in2 of tape per 1 lb load should be used to support static loads. This guideline provides a safety factor of at least 5.

D. Differential Movement (Shear strain): Two bonded surfaces like glass and an aluminum frame may experience differential movement relative to each other as a result of thermal expansion and contraction or other events such as seismic movement or slab deflection. 3M™ VHB™ Structural Glazing Tape can tolerate shear movement up to 3 times its original thickness (300% shear strain). This means 2.3 mm (0.090 in.) thick 3M™ VHB™ Structural Glazing Tape can safely experience shear strain up to 6.9 mm (0.27 in.).

E. Static load and dynamic load calculation should be performed on unsupported deadload structural glazing applications. The calculation resulting in the wider tape width should be used as the appropriate tape width for the application.

PART 3 – EXECUTION

3.01 EXAMINATION

A. Comply with manufacturer's application requirements.

3.02 PREPARATION

A. Comply with manufacturer's application requirements.

3.02 INSTALLATION

A. Comply with manufacturer's installation guidelines.

END OF SECTION

SECTION 06 10 00
ROUGH CARPENTRY

PART 1 – GENERAL

1.01 SECTION REQUIREMENTS:

A. Section specifies:
1. Wood blocking
2. Framing
3. Seething
4. Furring
5. Nailers
6. Sub-flooring
7. rough hardware
8. Light wood construction.

B. Related Requirements
1. Section 06 20 00: FINISHED CARPENTRY.

1.02 SUMBITTALS

A. Submit in accordance with Section 01 30 00, SHOP ADMINSTRATIVE REQUIREMENTS.

B. Shop Drawings showing framing connection details, fasteners, connections and dimensions.

1.03 PRODUCT DELIVERY, STORAGE AND HANDLING:

A. Protect lumber and other products from dampness both during and after delivery at site.

B. Pile lumber in stacks in such manner as to provide air circulation around surfaces of each piece.

C. Stack plywood and other board products so as to prevent warping.

D. Locate stacks on well drained areas, supported at least 150 mm (6 inches) above grade and cover with well ventilated sheds having firmly constructed over hanging roof with sufficient end wall to protect lumber from driving rain.

1.04 APPLICABLE PUBLICATIONS:

A. Publications listed below form a part of this specification to extent referenced. Publications are referenced in the text by basic designation only.

B. American Forest and Paper Association (AFPA):National Design Specification for Wood Construction
   1. NDS-05 Conventional Wood Frame Construction

C. American Institute of Timber Construction (AITC):
   1. A190.1-02 Structural Glued Laminated Timber

D. American Society of Mechanical Engineers (ASME):
   1. B18.2.1A-96(R2005) Square and Hex Bolts and Screws
   2. B18.2.2-87(R2005) Square and Hex Nuts
   3. B18.6.1-81 (R97) Wood Screws
   4. B18.6.4-98(R2005) Thread Forming and Thread Cutting Tapping Screws and Metallic Drive Screws

E. American Plywood Association (APA):
   1. E30-03 Engineered Wood Construction Guide

F. American Society for Testing And Materials (ASTM):
   1. A47-99(R2004) Ferritic Malleable Iron Castings
   2. A48-03 Gray Iron Castings
   3. A653/A653M-07 Steel Sheet Zinc-Coated (Galvanized) or Zinc-Iron Alloy Coated (Galvannealed) by the Hot Dip Process
   4. D143-94(R2004) Small Clear Specimens of Timber, Method of Testing
   5. D1760-01 Pressure Treatment of Timber Products
   6. D2559-04 Adhesives for Structural Laminated Wood Products for Use Under Exterior (Wet Use) Exposure Conditions
   7. D3498-03 Adhesives for Field-Gluing Plywood to Lumber Framing for Floor Systems
   8. F844-07 Washers, Steel, Plan (Flat) Unhardened for General Use

G. Federal Specifications (Fed. Spec.):
   1. MM-L-736C Lumber; Hardwood

H. Commercial Item Description (CID):
   1. A-A-55615 Shield, Expansion (Wood Screw and Lag Bolt Self Threading Anchors)

I. U.S. Department of Commerce Product Standard (PS)
   1. PS 1-95 Construction and Industrial Plywood

2. PS 20-05American Softwood Lumber Standard

PART 2 – PRODUCTS

2.01 LUMBER

A. Unless otherwise specified, each piece of lumber bear grade mark, stamp, or other identifying marks indicating grades of material, and rules or standards under which produced.
   1. Identifying marks in accordance with rule or standard under which material is produced, including requirements for qualifications and authority of the inspection organization, usage of authorized identification, and information included in the identification.
   2. Inspection agency for lumber approved by the Board of Review, American Lumber Standards Committee, to grade species used.

B. Structural Members: Species and grade as listed in the AFPA, National Design Specification for Wood Construction having design stresses as shown.

C. Lumber Other Than Structural:
   1. Unless otherwise specified, species graded under the grading rules of an inspection agency approved by Board of Review, American Lumber Standards Committee.
   2. Framing lumber: Minimum extreme fiber stress in bending of 1100.
   3. Furring, blocking, nailers and similar items 100 mm (4 inches) and narrower Standard Grade; and, members 150 mm (6 inches) and wider, Number 2 Grade.

D. Sizes:
   1. Conforming to Prod. Std., PS20.
   2. Size references are nominal sizes, unless otherwise specified, actual sizes within manufacturing tolerances allowed by standard under which produced.

E. Moisture Content:
   1. At time of delivery and maintained at the site.
   2. Boards and lumber 50 mm (2 inches) and less in thickness: 19 percent or less.
   3. Lumber over 50 mm (2 inches) thick: 25 percent or less.

F. Fire Retardant Treatment:
   1. Mil Spec. MIL-L-19140 with piece of treated material bearing identification of testing agency and showing performance rating.
   2. Treatment and performance inspection, by an independent and qualified testing agency that establishes performance ratings.

G. Preservative Treatment:
   1. Treat wood members and plywood exposed to weather or in contact with plaster, masonry or concrete, including framing of open roofed structures; sills, sole plates, furring, and sleepers that are less than 600 mm (24 inches) from ground; nailers, edge strips, blocking, crickets, curbs, cant, vent strips and other members used in connection with roofing and flashing materials.
   2. Treat other members specified as preservative treated (PT).
   3. Preservative treat by the pressure method complying with ASTM D1760, except any process involving the use of Chromated Copper arsenate (CCA) for pressure treating wood is not permitted.

2.02 PLYWOOD

A. Comply with Prod. Std., PS 1.

B. Bear the mark of a recognized association or independent inspection agency that maintains continuing control over quality of plywood which identifies compliance by veneer grade, group number, span rating where applicable, and glue type.

C. Subflooring: Under finish wood flooring or underlayment
   1. APA Rated sheathing, Exposure 1. panel grade CD.
   2. Minimum 15 mm (19/32 inch) thick with span rating 32/16 or greater for supports at 400 mm (16 inches) on center and 18.25 mm (23/32 inch) thick with span rating 48/24 for supports at 600 mm (24 inches) on center.

2.03 STRUCTURAL-USE PANELS

A. Material shall conform to "Softwood Plywood-Construction and Industrial:, Product Standard PS 1-83 of U.S. Department of Commerce, Bureau of Standards.

B. Fire treatment per the following standard: "Plywood – Fire Retardant Treatment by Pressure Process (AWPA C27-74).

C. Plywood shall be manufactured in accordance with American Plywood Association standards with each sheet grade marked.

D. All plywood shall have a minimum of 5 plies.

E. Plywood shall be C-D Structural I exterior glue and shall be ½-inch thick minimum.

F. Holes for bolts shall be no more than 1/16-inch larger than bolt diameter, unless noted otherwise.

G. Bearing the mark of a recognized association or independent agency that maintains continuing control over quality of panel which identifies compliance by end use, Span Rating, and exposure durability classification.

2.04 ROUGH HARDWARE AND ADHESIVES

A. Anchor Bolts:
   1. ASME B18.2.1 and ANSI B18.2.2 galvanized, 13 mm (1/2 inch) unless shown otherwise.

B. Washers:
   1. Hot dip galvanized

C. Screws:
   1. Wood to Wood: ANSI B18.6.1 or ASTM C1002.
   2. Wood to Steel: ASTM C954, or ASTM C1002.

D. Adhesives:
   1. For structural laminated Wood: ASTM D2559.

PART 3 - EXECUTION

3.01 INSTALLATION OF FRAMING AND MISCELLANEOUS WOOD MEMBERS:

A. Conform to applicable requirements of the following:
   1. AFPA National Design Specification for Wood Construction for timber connectors.
   2. AFPA WCD-number 1, Manual for House Framing
   3. APA for installation of plywood or structural use panels.
   4. ASTM F 499 for wood underlayment.

B. Fasteners:
   1. Bolts: Fit bolt heads and nuts bearing on wood with washers.
      a. Use bolts to steel over 2.84 mm (0.112 inch, 11 gauge) in thickness. Secure wood nailers to vertical structural steel members with bolts, placed one at ends of nailer and 600 mm (24 inch) intervals between end bolts. Use clips to beam flanges.
   2. Drill Screws to steel less than 2.84 mm (0.112 inch) thick.
      a. ASTM C1002 for steel less than 0.84 mm (0.033 inch) thick.
      b. ASTM C 954 for steel over 0.84 mm (0.033 inch) thick.
   3. Screws to Join Wood: ASTM C1002, sized to provide not less than 25 mm (1 inch) penetration into anchorage member.

C. Cut notch, or bore in accordance with NFPA Manual for House-Framing for passage of ducts wires, bolts, pipes, conduits and to accommodate other work. Repair or replace miscut, misfit or damaged work.

D. Blocking, Nailers, and Furring:
   1. Install furring, blocking, nailers, and grounds where shown.
   2. Use longest lengths practicable.
   3. Use fire retardant treated wood blocking where shown at openings and where shown or specified.
   4. Layers of Blocking or Plates: stagger end joints between upper and lower pieces.
   5. Unless otherwise shown, use wall furring 25 mm by 75 mm (1 inch by 3 inch) continuous wood strips installed plumb on walls, using wood shims where necessary so face of furring forms a true, even plane. Space furring not over 400 mm (16 inches on centers, butt joints over bearings and rigidly secure in place. Anchor furring on 400 mm (16 inches) centers.

E. Framing:
   1. Set with crown edge up.
   2. Hook ties at steel framing over top flange of steel members.

F. Plywood. subflooring:
   1. Lay board subflooring diagonally, with close joints. Stagger end joints and make joints over supports. Bear each board on at least three supports.
   2. Apply plywood subflooring with face grain or long dimension at right angles to the supports, with edges 6 mm (1/4 inch) apart at side joints, and 3 mm (1/8 inch) apart at end joints.
   3. Combination subfloor-underlayment: Space edges 3 mm (1/8 inch) apart.
   4. Stagger panel end joints and make over support.

END OF SECTION

SECTION 06 15 00
WOOD DECKING

PART 1 – GENERAL

1.01 SUMMARY

A. Section includes:
1. 1" x 6" Ipe Hardwood Decking
2. Fasteners

1.02 SUBMITTALS

A. Submit the following supporting data.
1. Product Data: For each flooring system type required indicating compliance with requirements; include complete installation and maintenance instructions.

PART 2 – PRODUCTS

2.01 MANUFACTURER

A. Advantage Trim & Lumber CO.
http://www.advantagelumber.com/ipedeckinstall.htm

2.02 FINISHES

A. Exterior Finish: Provide finishes as specified in project manual.
1. Use finishes recommended by manufacturer.

2.02 FASTENERS

A. Self-drilling Fasteners: Provide stainless steel or ceramic coated steel fasteners with sufficient length to penetrate supporting structural member a minimum of 1-1/2 inches.

2.03 QUALITY ASSURANCE

A. Manufacturing Standard: Conform to ANSI/AITC A190.1.

PART 3 – EXECUTION

3.01 DELIVERY, STORAGE, AND HANDLING

A. Per manufacturer's notes: Ipe decking should be allowed to sit where it will be installed for a few days prior to installation in order to get acclimated to your local temperature and humidity levels. The deck design should allow for ground side ventilation to insure stability of the decking due to proper air circulation.

B. Separate indoor decking from outdoor decking.
   1. Ipe decking is available in either partially air dried or kiln dried lumber. Air dried lumber is intended for outdoor use for decks, benches, docks, play yards, or other outdoor furniture. Air dried lumber inside will shrink. Kiln dried lumber is best suited for indoor uses. Kiln dried lumber outside will expand.

3.02 INSTALLATION

A. Comply with manufacturers installation instructions

   1. Due to the very hard nature of Ipe, premium carbide tipped saw blades are recommended for cutting. Brad point drill bits or foster bits provide cleaner holes than standard HSS twist bit. Predrill and countersink planks for fasteners
   2. Fresh cuts should be sealed within 24hrs with end grain sealant. We sell end grain sealant by the quart, typically enough for a 500 sq. ft of decking. The end grain sealant is simply applied with a paintbrush and dries clear.
   3. Allow 1/16" gaps between deck boards for water drainage and wood expansion / contraction. This also allows for proper air circulation. Average shrinkage is approximately 1/16" on 4" wide boards and 3/32" on 6" wide boards.
   4. If the need arises to glue your Ipe, waterproof glues, such as *Gorilla* brand polyurethane can be used with satisfactory results. Epoxy glues are also very suitable and can be dyed to black, brown or other colors to match your Ipe deck. Epoxy produces a very strong waterproof bond, particularly important for gluing posts.

END OF SECTION

SECTION 06 20 00
FINISH CARPENTRY

PART 1 – GENERAL

1.01 SUMMARY

A. Section includes:
   1. Cedar Slats
   2. Cedar Baseboard

1.02 SUBMITTALS

A. General: Submit the following in accordance with Conditions of Contract and Division 01 specification Sections.

   1. No Submittals required for this section

B. Submit the following supporting data.

   1. Product Data: For each appliance type required indicating compliance with requirements, include complete operating and maintenance instructions for each appliance.

1.03 QUALITY ASSURANCE

A. Factory-mark each piece of lumber and plywood with type, grade, mill, and grading agency identification; except omit marking from surfaces to receive transparent finish, and submit mill certificate that material has been inspected and graded in accordance with requirements if it cannot be marked on a concealed surface.

B. Perform finish carpentry work in accordance with AWI Quality Standards, Custom Grade.

1.04 DELIVERY, STORAGE, AND HANDLING

A. Protect finish carpentry materials during transit, delivery, storage, and handling to prevent damage, soiling, and deterioration.

B. Do not deliver finish carpentry materials, until painting, wet work, grinding, and similar operations which could damage, soil, or deteriorate woodwork have been completed in installation areas. If, due to unforeseen circumstances, finish carpentry materials must be stored in other than installation areas, store only in areas meeting requirements specified for installation areas.

1.05 PROJECT CONDITIONS

A. Conditioning: Installer shall advise Contractor of temperature and humidity requirements for finish carpentry installation areas.

B. Environmental Limitations: Do not deliver or install interior finish carpentry until building is enclosed and weatherproof, wet-work in space is completed and nominally dry, and HVAC system is operating and will maintain temperature and relative humidity at occupancy levels throughout the remainder of construction period.

   1. Maintain temperature and humidity in installation area as required to maintain moisture content of installed finish carpentry within a 1.0 percent tolerance of optimum moisture content, from date of installation through remainder of construction period. The fabricator of woodwork shall determine optimum moisture content and required temperature and humidity.

C. Weather Limitations: Proceed with installing exterior finish carpentry only when existing and forecasted weather conditions will permit work to be performed according to manufacturer's recommendations and warranty requirements and at least one coat of specified finish to be applied without exposure to rain, snow, or dampness.

PART 2 – PRODUCTS

2.01 MATERIALS

A. Western Red Cedar: Milled S4S. Select clear trims clear of knots and bleeding www.realcedar.org

B. Grade Stamps: Provide lumber with each piece factory marked with grade stamp of inspection agency evidencing compliance with grading rule requirements and identifying grading agency, grade, species, moisture content at time of surfacing, and mill.
   1. For exposed lumber, furnish pieces with grade stamps applied to ends or back of each piece, or omit grade stamps entirely and provide certificates of grade compliance issued by inspection agency.

C. Softwood Plywood: Comply with DOC PS 1, "U.S. Product Standard for Construction and Industrial Plywood."

D. Hardwood Plywood: Comply with ANSI/HPVA HP-1, "Interim Voluntary Standard for Hardwood and Decorative Plywood."

2.02 FINISHES

A. Exterior Finish:

2.03 FASTENERS

A. Provide matching color ceramic coated finish head screws.

PART 3 – EXECUTION

3.01 EXAMINATION

A. Examine finish dimensions matches shop drawing specifications.

B. Do not install wet, molded, or damaged materials.

3.02 PREPARATION

A. Clean substrates of projections and substances detrimental to application.

B. Condition finish carpentry to average prevailing humidity conditions in installation area before installation, for a minimum of 24 hours unless longer conditioning is recommended by manufacturer.

C. Prime and back prime limber for painted finish. Comply with requirements for surface preparation and application in Section 09 90 00 – Painting

D. Ensure that all electrical or other services are in place.

3.03 INSTALLATION

A. Discard units of material which are unsound, warped, bowed, twisted improperly treated, not adequately seasoned or too small to fabricate work with minimum of joints or optimum jointing arrangements. Do not use manufactured units with defective surfaces, sizes, or patterns.

B. Install the work plumb, level, true, and straight with no distortions. Shim as required using concealed shims. Install to a tolerance of 1/8" in 8'-0" for plumb and level countertops; and with 1/16" maximum offset in flush adjoining 1/8" maximum offsets in revealed adjoining surfaces.

C. Scribe and cut work to fit adjoining work, and refinish cut surfaces or repair damaged finish at cuts.

D. Countersink nails, fill surface flush, and sand where face nailing is unavoidable.

E. Install to tolerance of 1/8 inch in 96 inches for plumb and level. Install adjoining finish carpentry with 1/32 inch maximum offset for flush installation and 1/16 inch maximum offset for reveal installation.

F. Coordinate finish carpentry with materials and systems in or adjacent to standing and running trim and rails. Provide cutouts for mechanical and electrical items that penetrate exposed surfaces of trim and rails.

G. Finish according to specified requirements.

H. Anchor finish carpentry work to anchorage devices or blocking built-in or directly attached to substrates. Secure to grounds, stripping and blocking with countersunk, concealed fasteners and blind nailing as required for a complete installation. Except where prefinished matching fastener heads are required, use fine finishing nails for exposed nailing, countersunk and filled flush with finished surface, and matching final finish where transparent is indicated.

3.04 WOOD STANDING AND RUNNING TRIM INSTALLATION

A. Install with minimum number of joints practical, using full-length pieces from maximum lengths of lumber available. Do not use pieces less than 24 inches long, except where necessary. Stagger joints in adjacent and related standing and running trim. Cope at returns and miter at corners to produce tight-fitting joints with full-surface contact throughout length of joint. Use scarf joints for end-to-end joints. Plane backs of casings to provide uniform thickness across joints, if required.

1. Match color and grain pattern across joints for transparent finish locations.
2. Drill pilot holes in hardwood before fastening to prevent spitting. Fasten to prevent movement or warping. Countersink fastener heads on exposed carpentry work and fill holes.

3.05 ADJUSTMENT, CLEANING, FINISHING, AND PROTECTION

A. Repair damaged and defective finish carpentry work wherever possible to eliminate defects functionally and visually; where not possible to repair properly, replace woodwork. Adjust joinery for uniform appearance.

B. Clean finish carpentry work on exposed and semi-exposed surfaces. Touch-up factory-applied finishes to restore damaged or soiled areas.

C. Preparation for Finishing: Sand work smooth and set all nails and screws. Apply wood filler in exposed nail and screw indentations.

D. Cleaning: Keep premises in a neat, safe, and orderly condition at all times during execution of this portion of the work, free from the accumulation of sawdust, cut-ends, and debris.

E. Refer to Division 09 Sections for final finishing of installed finish carpentry work.

F. Protection: Installer of finish carpentry work shall advise Contractor of final protection and maintained conditions necessary to ensure that work will be without damage or deterioration at time of acceptance.

END OF SECTION

SECTION 06 43 16
WOOD RAILINGS

PART 1 – GENERAL

1.01 SUMMARY

A. Section includes the WallGuard.Com 2050 Infinity Series Handrails

B. Related Requirements
   1. Section 05 12 00 – Structural Steel Framing

1.02 REFERENCES

A. ANSI/CABO A117.1 – American National Standard for Buildings and Facilities; Providing Accessible and Usable Buildings and Facilities; Council of American Building Officials.

B. ASTM E 84 – Standard Test Method for Surface Burning Characteristics of Building Materials.

C. CAN/ULC S102.2 – Standard Method of Test for Surface Burning Characteristics of Building Materials.

1.03 SUBMITTALS

A. Manufacturer product data sheets and specifications.

1.04 QUALITY ASSURANCE

A. Provide test reports showing compliance with the performance specified for:
   1. Fire-related properties.
   2. Accessibility and safety properties.
   3. Impact strength.

PART 2 – PRODUCTS.

2.01 MANUFACTURERS

A. Provide Infinity Handrails by:
   1. WallGuard.Com LLC

P.O. Box 1109
Dover Plains, New York 12522
Tel: 1-877-943-6826
Fax: 1-877-943-2926
Email: sales@wallguard.com
http://www.wallguard.com

2. Substitutions will not be considered.

2.02 MATERIALS

A. Wood: Kiln dried solid oak for handrails.

B. Steel: steel tube section

2.03 HANDRAILS

A. Handrails – Performance Requirements: Pull out and live load capacity complying with State of California requirements, as administered by the Office of Statewide Health Planning and Development (OSHPD), and ANSI A117.1 requirements.

B. 2050 Handrail: Provide 1-1/2 inch diameter wood handrail with stain and accessories
   1. Color: Oak

2.04 ACCESSORIES

A. Provide appropriate returns, corners, and mounting brackets as required to properly finish handrail system and to support it in conformance with Uniform Federal Accessibility Standards.

PART 3 – EXECUTION

3.01 EXAMINATION

A. Verify that wall surfaces are properly prepared to receive installation of handrails. Verify that required blocking and bracing is in place for stud walls before beginning installation.

3.02 INSTALLATION

A. Install handrail systems in full compliance with manufacturer's installation instructions.

B. Wood Handrails: Attach appropriate mounting brackets at 32 inches on center, and within 30 inches of each return and outside corner. Cut and assemble wood accessories using a minimum 120 tooth finishing saw blade and hardware as furnished by manufacturer.

1. Mount system so top of handrail is a 32 inches, unless otherwise indicated on drawings.
2. Touch up any nicks with finishing pens supplied with handrail system.

3.02 ADJUSTING AND CLEANING

A. Verify that handrail is level and is rigidly secured to substrate; make any adjustments required.

B. Clean areas of installation and handrail components, using materials and methods recommended by manufacturer. Remove from project site packaging and debris caused by installation.

END OF SECTION

SECTION 06 64 00
PLASTIC PANELING

PART 1 – GENERAL

1.01 SUMMARY

A. Section includes polycarbonate multi wall sheet filled with Nanogel translucent aerogel.

B. Related Requirements
   1. Section 07 21 00: Thermal Insulation.

1.02 REFERENCES

A. ASTM D 635 – Standard Test Method for Rate of Burning and/or Extent and Time of Burning of Self-Supporting Plastics in a Horizontal Position

B. ASTM D 1929 – Standard Test Method for Ignition Properties of Plastics

C. ASTM D 2843 – Standard Test Method for Density of Smoke from the Burning and Decomposition of Plastics

D. ASTM E 84 – Standard Test Method for surface burning characteristics of building materials

E. ISO 10077-2:2003 (E) / EN 673

1.03 SUBMITTALS

A. Manufacturer's product data sheets.

1.04 DELIVERY, STORAGE, AND HANDLING

A. Do not slide, drag or drop polycarbonate sheet materials.

B. Do not store polycarbonate sheet materials in areas subject to direct UV exposure.

C. Store products of this section with polycarbonate sheet manufacturer's protective film intact.

D. Maintain storage area in accordance with polycarbonate sheet manufacturer's instructions until installation of products.

1.05 WARRANTY

A. At project closeout, provide to Owner or Owners Representative an executed copy of the manufacturer's standard limited warranty against manufacturing defect, outlining its terms, conditions, and exclusions form coverage.
   1. Duration: Ten (10) year warranty against defects in materials.

PART 2 – PRODUCTS

2.01 MANUFACTURER

A. AmeriLux International, LLC
   1212 Enterprise Dr.
   DePere, WI 54115
   Phone: (920) 336-9300
   Toll Free: (888) 602-4441
   Fax: (920) 336-9301
   http://www.ameriluxinternational.com/index.html

2.02 DESIGN CRITERIA

A. Lexan Thermoclear Multi Wall Sheet
   1. CAD + Sectional thermal property
      a. LEXAN k = 0.21 W/mK
      b. Nanogel k = 0.012 W/mK
   2. Boundary condition:
      a. External heat transfer coefficient, he = 25 W/m^2K
      b. Internal heat transfer coefficient, hi = 7.7 W/m^2K
      c. dT = 20 oC
   3. Heat flux: 19.18 W/m^2K
   4. Calculated U Value: 0.959 W/ m^2K
   5. Temperature Difference: 20 degrees C
   6. Q: 19.183 W/m^2

2.03 MATERIALS

A. Lexan Thermoclear Multi Wall Sheet with Nanogel, 3 wall
   1. Sheet Type: LTC16 3TS
   2. Cavity: Nanogel
   3. CAD Geometry:
      a. Sheet thickness: 16mm
      b. Outer/inner skin thickness: 0.80/0.75 mm
      c. Rib thickness: 0.50 mm
      d. Mid sin thickness: 0.20 mm
      e. Distance between ribs = 20mm
   4. FEM Mesh

B. Description
   1. Multiwall polycarbonate systems used for daylighting can be enhanced by the inclusion of Nanogel. Nanogel-filled polycarbonate sheets can provide cost effective insulation, improved quality of light, sound dampening, and design flexibility. By increasing the insulation factor, less material needs to be used. Nanogel particles diffuse light evenly throughout the structure which creates a softer, improved source of light. Acoustic STC values, which are increased in structural polycarbonate with Nanogel, create an improved sound barrier. These factors, when combined with the diverse nature of multiwall polycarbonate in daylighting and insulation systems, allow for greater design flexibility and can meet a variety of needs.

2.04 COMPONENTS

A. 16mm, 3 wall Lexan Thermoclear Multi Wall Sheet cavity will be filled with Cabot Nanogel Translucent Aerogel described in Section 07 21 00.
   1. Weight: 0.80 Lb/Sqf
   2. Insulation: 0.17-5.88
   3. Light Transmission: 62%
   4. Shading Coefficient: 0.71
   5. SHGC: 0.62
   6. Solar Transmission: 62

PART 3 - EXECUTION

3.01 EXAMINATION

A. Verification of Conditions:
   1. Openings are in accordance with approved shop drawings
   2. Glazing channels or recesses are sized for correct glazing edge engagement.

3.02 PREPARATION

A. Clean glazing channels or recesses free of obstructions, soil, debris, and other materials..

B. Seal porous glazing channels or recesses with primer-sealer compatible with substrate and polycarbonate sheet materials.

C. Cut polycarbonate sheet materials to exact sizes required, with clean edges free of notches; clean contact edges with solvent compatible with polycarbonate sheet materials, as specified or approved by polycarbonate sheet manufacturer.

3.03 INSTALLATION

A. Install plastic glazing in accordance with polycarbonate sheet manufacturer's instructions.

B. Do not use glazing accessories not specified or approved by polycarbonate sheet manufacturer.

3.04 CLEANING

A. Immediately after completing construction activities relating to installation of polycarbonate sheet materials, remove remainder of strippable masking from surfaces of polycarbonate sheet glazing; do not expose masking to sunlight for an extended period of time.

B. Immediately after removing masking, clean sheets in accordance with polycarbonate sheet manufacturer's instructions:
   1. Rinse surface with lukewarm water.
   2. Wash surface with mild soap and lukewarm water.
   3. Use soft cloth or sponge gently to loosen dirt and grime; scrubbing glazing surfaces, or using squeegee on glazing surfaces, is not permitted.
   4. Repeat rinse as above, and wipe surface dry with soft cloth until \surfaces are spotless and dry.

3.05 PROTECTION OF INSTALLED PRODUCTS

A. Immediately after cleaning, cover polycarbonate sheet surfaces with polyethylene sheeting, or other covering material approved by polycarbonate sheet manufacturer; secure covering in place by taping to framing members – do not tape covering to polycarbonate sheet materials.

B. Protect installed sheets from damage to function or finish by subsequent construction activities.

C. Repair minor damage to finishes in accordance with polycarbonate sheet manufacturer's recommendations.

D. Replace sheets having damage to function, and sheets having damage to finishes which cannot be repaired to Architect's acceptance.

END OF SECTION

SECTION 06 73 00
COMPOSITE DECKING

PART 1 - GENERAL

1.01 SUMMARY

A. Section includes the FRP grating.

B. Related Requirements
   1. Section 06 80 00: Composite Fabrications.

1.02 SCOPE OF WORK

A. Furnish all labor, materials, equipment and incidentals necessary to install the fiberglass reinforced polymer (FRP) products as specified herein.

1.03 SUBMITTALS

A. Shop drawings of fabricated molded gratings and appurtenances shall be submitted to the Engineer for approval in accordance with the requirements of Section 10 30 00. Fabrication shall not start until receipt of Engineer's approval marked "Approved As Submitted" or "Approved As Noted".

B. Manufacturer's catalog data showing:
   1. Dimensions, spacing, and construction of grating
   2. Materials of construction

C. Detail shop drawings showing:
   1. Dimensions
   2. Sectional assembly
   3. Location and identification mark
   4. Size and type of supporting frames required

1.04 QUALITY ASSURANCE

A. The material covered by these specifications shall be furnished by an ISO-9001:2000 certified manufacturer of proven ability who has regularly engaged in the manufacture and installation of FRP systems.

B. Substitution of any component or modification of system shall be made only when approved by the Architect or Engineer.

C. Fabricator Qualifications: Firm experienced in successfully producing FRP fabrications similar to that indicated for this project, with sufficient production capacity to produce required units without causing delay in the work.

D. In addition to requirements of these specifications, comply with manufacturer's instructions and recommendations for work.

1.05 DESIGN CRITERIA

A. The design of FRP products including connections shall be in accordance with governing building codes and standards as applicable.

B. Design live loads of FRP gratings and floor panels shall not be less than 100 PSF uniformly distributed unless specifically stated otherwise in drawings and/or supplementary conditions. Grating and floor panel deflection at the center of a simple span not to exceed 0.25".

C. Structural members shall be designed to support all applied loads. Deflection in any direction shall not be more than L/180 of span for structural members. Connections shall be designed to transfer the loads.

1.06 SHIPPING AND STORAGE INSTRUCTIONS:

A. All systems, sub-systems and structures shall be shop fabricated and assembled into the largest practical size suitable for transporting.

B. All materials and equipment necessary for the fabrication and installation of molded gratings and appurtenances shall be stored before, during, and after shipment in a manner to prevent cracking, twisting, bending, breaking, chipping or damage of any kind to the materials or equipment, including damage due to over exposure to the sun. Any material which, in the opinion of the Engineer, has become damaged as to be unfit for use shall be promptly removed from the site of work, and the Contractor shall receive no compensation for the damaged material or its removal.

C. Identify and match-mark all materials, items and fabrications for installation and field assembly.

PART 2 – PRODUCTS

2.01 MANUFACTURER

A. Strongwell - Bristol Division
400 Commonwealth Ave
P.O. Box 580
Bristol, VA
24203-0580 USA
Phone: (276) 645-8000
Fax: (276) 645-8132
http://www.strongwell.com/products/molded_prod/molded_grating/index.shtml

B. Product Substitution is okay if the alternative manufacturer is approved by architect, or design engineer.

2.01 DESIGN

A. The grating shall be one piece construction with the tops of the bearing bars and cross bars in the same plane.

B. The mesh pattern and thickness shall be:
1. 2" square mesh, 2" thick
2. 1" x 4" rectangular mesh, 1" thick

C. The resin used in the manufacture of the grating shall be an Architectural Grade – Fire Retardant.

D. Grating shall be fire retardant with a flame spread rating of 25 or less when tested in accordance with ASTM E-84.

E. For slip resistance, the top of each bar shall be manufactured with a meniscus or concave profile.

2.02 MATERIALS

A. Materials used in the manufacture of the FRP products shall be raw materials in conformance with the specification.

B. All materials shall be of the kind and quality specified.

C. If required, after fabrication, all cut ends, holes and abrasions of FRP shapes shall be sealed with a compatible resin coating.

D. FRP products exposed to weather shall contain an ultraviolet inhibitor. Should additional ultraviolet protection be required, a one mil minimum UV coating can be applied.

E. All exposed surfaces shall be smooth and true to form.

2.03 FABRICATION

A. The FRP molded grating shall be manufactured by the open mold process.

B. Hold down clamps shall be type M clips for attaching grating to supports

C. If required, all cut and machined edges, holes and abrasions shall be sealed with a compatible resin.

D. All panels shall be fabricated to the sizes shown on the approved shop drawing.

PART 3 – EXECUTION

3.01 PREPARATION

A. Coordinate and furnish anchorages, setting drawings, diagrams, templates, instructions and directions for installation of anchorages. Coordinate delivery of such items to project site.

3.02 INSPECTION AND TESTING:

A. The Engineer shall have the right to inspect and test all materials to be furnished under these specifications prior to their shipment from the point of manufacture.

B. All labor, power, materials, equipment and appurtenances required for testing shall be furnished by the Contractor at no cost to the Owner.

3.03 INSTALLATION: GENERAL

A. Fastening to in-place construction: Provide anchorage devices and fasteners where necessary for securing miscellaneous FRP fabrications to in-place construction.

B. Cutting, fitting and placement: Perform cutting, drilling and fitting required for installation of miscellaneous FRP fabrications. Set FRP fabrication accurately in location, alignment and elevation; with edges and surfaces level, plumb, true and free of rack; measured from established lines and levels.

3.04 FRP INSTALLATION

A. If required, all field cut and drilled edges, holes and abrasions shall be sealed with a catalyzed resin compatible with the original resin as recommended by the manufacturer.

B. Install items specified as indicated and in accordance with manufacturer's instructions.

END OF SECTION

SECTION 06 80 00
COMPOSITE FABRICATIONS

PART 1 - GENERAL

1.01 SUMMARY

A. Section includes the FRP Composite fabrication.

B. Related Requirements
1. Section 06 05 23: Wood, Plastic, and Composite Fastenings.

1.02 REFERENCES

A. Product: OVC Reinforcements M123 Chopped Strand Mat
1. Approved by Lloyd's Register
2. Approved by Det Norske Veritas
3. Approved by Croatian Register

1.03 SUBMITTALS

A. Manufacturers' product data sheets.

1.04 PACKAGING, STORAGE AND HANDLING

A. Product: Ashland Performance Materials AROPOL L80302-12 Surfboard Resin
1. Standard Package: Steel Drum with net weight of 220 KG (485 lb)
2. Storage: Drums – Store at temperatures below 25 degrees C (77 degrees F). Storage life decreases with increasing storage temperature. Avoid exposure to heat such as direct sunlight or steam pipes. To avoid contamination of the product with water, do not store outdoors. Keep sealed to prevent moisture pick-up and monomer loss. Mild mixing is recommended after prolonged storage. Rotate stock.

B. Product: OVC Reinforcements M123 Chopped Strand Mat
1. Packaging:
a. Each roll is wound on a cardboard tube (internal diameter 101 mm) and packaged in an individual cardboard box, 40 x 40 (L x W); the height is equal to the width of the mat.

b. Each roll is wound on a cardboard tube (internal diameter 101 mm) and packaged in an individual cardboard box, 40 x 40 (L x W); the height is equal to the width of the mat.
c. Special packaging: Strips are packed in card board boxes or palletized, according to the quantity.

2. Labeling: Each pallet shall bear two labels with this information: product reference, net and gross weight in kg, packaging and product code, identification code of the palletized unit, and production date.
3. Storage: The M123 mat should be stored in its original packaging in a dry and cool place. Best conditions are at temperature from 10 to 35°Cand humidity between 35 and 85%. If you store the product at lower temperatures, please move the soon-to-be-processed pallets to the production area 24 hours ahead of time; remove part of the protective cover of each roll to prevent condensation. You can stock pallets one on one with a plywood plank between the two.

1.06 WARRANTY

A. Product: Ashland Performance Materials AROPOL L80302-12 Surfboard Resin
   1. Commercial Warranty: Three months from date of shipment when stored in accordance with the storage conditions previously stated.

PART 2 – PRODUCTS

2.01 MANUFACTURERS

A. Ashland Performance Materials
   Americas Headquarters
   5200 Blazer Parkway
   Dublin, OH 43017
   Tel: 1-800-523-6963
   Email: PMamericasales@ashland.com

   1. Product: Ashland Performance Materials AROPOL L80302-12 Surfboard Resin

B. Owens Corning
   Composite Materials, LLC
   One Owens Corning Parkway
   Toledo, Ohio 43659
   Phone: 1-800-GET-PINK
   www.owenscoming.com
   www.ocvreinforcements.com

1. Product: OVC Reinforcements M123 Chopped Strand Mat

2.01 DESCRIPTION

A. Product: OVC Reinforcements M123 Chopped Strand Mat
   1. This product is produced using Advantex® glass fiber. Advantex® glass fiber combines the electrical and mechanical properties of traditional E-glass with the acid corrosion resistance of E-CR glass.
   2. The M123 chopped strand mat is made with medium size strands of Advantex® Glass Roving, held together by a powder binder which is extremely soluble in styrene. The basic strand has a sizing system containing a silane coupling agent. This sizing system combined the binder properties make M123 suitable with epoxy, vinyl ester and anti-corrosion resins.

2.02 DESIGN CRITERIA

A. Product: OVC Reinforcements M123 Chopped Strand Mat
   1. Product features and product benefits
      a. Good drape ability
      b. Easy impregnation
      c. High tensile strength, suitable for filament winding or continuous laminating
      d. Excellent clarity of the UP laminates
      e. Good resistance to watering and chemical agents in anti-corrosion applications
   2. Technical Characteristics (Nominal Values)

Weight (G/M²)	Loss on ignition (%)	Moisture - Max value(%)
ISO 3374: 2000	ISO 1887: 1995	ISO 3344: 1997
225 ± 20%	4.5 ± 40%	0.2
300 ± 20%	3.5 ± 40%	
450 ± 20%	3.2 ± 40%	

   3. Visual Characteristics or Possible Defects
      a. Unbound edges
      b. Holes (>40mm) or tears
      c. Dirt spots (greater than 5m)
      d. Unopened strands
      e. Accumulation of fiber (>40mm)
      f. Each 100 m2 roll of chopped strand mat section may contain at most six of the defects listed above.

2.03 MATERIALS

A. Resin: Ashland Performance Materials AROPOL L80302-12 Surfboard Resin with 30 phr of ATH to obtain <200 flame spread rating

B. Fiberglass: OVC Reinforcements M123 Chopped Strand Mat (for Hand Lay-up)

2.04 FABRICATION

A. The FRP composite shall be manufactured by the open mold process.

B. If required, all cut and machined edges, holes and abrasions shall be sealed with a compatible resin.

C. The FRP composite shall be fabricated to the sizes shown on the approved shop drawing.

D. The FRP composite consists of two gel coats with one layer of reinforcement.

E. Fabricate 1/8" FRP panel for interior and 3/16" FRP panel for exterior.

PART 3 – EXECUTION

3.01 EXAMINATION

A. The FRP composite panels should be inspected in a well lit area upon receipt to insure customer satisfaction with the FRP composite panels before installation.

B. Inspect the panels for any defects.

C. Do not install FRP panels that are of questionable quality.

3.02 PREPARATION

A. The panels should be stored in a dry area. Do not store outdoors.

B. The panels should be unwrapped and stacked on a flat and dry surface. Do not stand panels on the end. Do not stack other materials on top of the FRP panels.

C. The normal fire-safety precautions should be taken when storing and using the FRP composite.

D. Before installing the FRP composite panels, check that all application surfaces are clean, flat, dry, smooth and free from dirt, grime and dust. Uneven surfaces should be corrected to achieve the best results. The linear panels will form to the contour of the surface when attached.

3.03 INSTALLATION

A. Comply with manufacturers' installation instructions for the mixture of resin and application of resin.

B. In the field use 3M structural glazing tape to adhere to structural angles bolted to the laminated plywood.

C. Installation Reminders:
   1. Follow safety and fire guidelines during the installation and use of the FRP panels. Compliance with local building codes is recommended.
   2. The first FRP panel that is installed should be set true with plumb line. Check plumb line during installation.
   3. Precondition panels prior to installation and allow for expansion and contraction during installation.
   4. Use moldings, silicone, fasteners and adhesive with panels for best installation.
   5. Remove excess silicone during installation or trim after silicone has cured.
   6. Place moldings on panels, if required, before fastening panels.
   7. Cut moldings as needed.
   8. Cut panels, if required, for proper installation.
   9. Clean panels after installation.

END OF SECTION

DIVISION 07 THERMAL AND MOISTURE PROTECTION

SECTION 07 21 00
THERMAL INSULATION

PART 1 - GENERAL

1.01 SUMMARY

A. Section includes:
   1. Cabot Corporation's Nanogel Translucent Aerogel TLD 301

1. Related Requirements
   1. Section 06 05 23: Wood, Plastic, and Composite Fastenings.
   2. Section 06 64 00: Plastic Paneling.

1.02 REFERENCES

A. Received Silver Cradle to Cradle certification from McDonough Braungart Design Chemistry

B. Cabot Corporation has certified it has completed the EU REACH pre-registrations required for all Nanogel aerogel products

1.03 SUMITTALS

A. Manufacturers' product data sheets.

PART 2 – PRODUCTS

2.01 MANUFACTURER

A. Cabot Corporation
   2 Seaport Lane, Suite 1300
   Boston, MA 02210
   Phone: 978-670-6266
   www.nanogel.com

2.02 MARTERIALS

A. Nanogel Translucent Aerogel TLD 301

1. Nanogel aerogel is amorphous silica used in the application of thermal insulation.

2.02 DESIGN CRITERIA

A. Particle size range for Nanogel Translucent Aerogel TLD 301: 0.07 – 1.2 mm

B. Pore diameter for Nanogel Translucent Aerogel TLD 301: 20nm

C. Porosity for Nanogel Translucent Aerogel TLD 301: >90%

D. Bulk density for Nanogel Translucent Aerogel TLD 301: 65 – 85kg/m^3

E. Surface chemistry for Nanogel Translucent Aerogel TLD 301: Fully hydrophobic

F. Surface area for Nanogel Translucent Aerogel TLD 301: 600 – 800m^2/g

G. CAS RN for Nanogel Translucent Aerogel TLD 301: 102262-30-6

H. Oil absorption for Nanogel Translucent Aerogel TLD 301: 540 – 650g DBP/100g particle

I. Thermal conductivity Performance for Nanogel Translucent Aerogel TLD 301: Extremely low thermal conductivity ranging from 9-12mW/mK

PART 3 – EXECUTION

3.01 INSTALLATION

A. Install Nanogel Translucent Aerogel in accordance with the manufacturer's recommendations.

B. Nanogel Translucent Aerogel to be used in cavity of Lexan Thermoclear Multi Wall Sheet.
   1. Provide structural glazing tape to seal all edges and corners of Lexan Sheet infill with Nanogel as specified in Section 06 05 23.
   2. Each infill sheet of Lexan to be cut and install to approximate size to ensure a tight fit between laminated plywood ribs and blocking of the exterior walls.

END OF SECTION

SECTION 07 62 00
SHEET METAL FLASHING AND TRIM

PART 1 – GENERAL

1.01 SUMMARY

A. Section includes:
1. Custom Fabricated Cap Flashing

C. Related Requirements
1. Section 07 92 00: Joint Sealants.

1.02 SUBMITTALS

A. Submit the following supporting data.
1. Product Data: For installation instructions.

PART 2 – PRODUCTS

2.01 MATERIALS

A. 26 gauge ASTM A 167, Type 304, 2D Finish, fully annealed, dead-soft temper stainless steel
1. Fasteners for Stainless-Steel Sheet: Series 300 stainless steel.

2.02 FABRICATION

A. Cap flashing will be custom fabricated to be fitted between rib modules.

PART 3 – EXECUTION

3.01 EXAMINATION

A. Do not install under harsh weather conditions as specified by manufacturer.

B. Do not install wet, molded, or damaged materials.

3.02 INSTALLATION

A. Co-Cap Flashing: Anchor to resist uplift and outward forces according to recommendations in SMACNA's "Architectural Sheet Metal Manual" and as indicated.

B. Interlock exterior bottom edge of coping with continuous cleat anchored to substrate at 16-inches centers.

C. Anchor interior leg of coping with washers and screw fasteners through slotted holes at 24-inch centers.

D. Installed by a trained professional with minimum of 5 years of experience in the fabrication and installation of sheet metal.

E. Sheet metal is clipped and sealed with the DAP Clean 100% silicon Sealant.

3.03 CLEANING

A. Clean exposed sheet metal work at completion of installation. Remove grease and oil films, handling marks, contamination from steel wool, fittings and drilling debris, and scrub-clean. Free the exposed metal surfaces of dents, creases, waves, scratch marks, and solder or weld marks.

END OF SECTION

SECTION 07 91 13
JOINT GASKETS

PART 1 – GENERAL

1.01 SUMMARY

A. Section includes:
1. Custom Compressible Gasket 1-1/4" min. thickness
2. Neoprene Strip Adhesive

B. Related Requirements
1. Section 05 12 00: Structural Steel Framing.
2. Section 07 92 00: Joint Sealants.

1.02 REFERENCES

A. Product: Allstate Gasket Neoprene Sheet Style 1119
1. CASTM D-2000
2. SAE J200
3. 1BC 810
4. MIL R-3065
5. SC 810

B. Product: Product: RH Nuttall Closed Cell Expanded Neoprene foam
1. ASTM D1056
2. SCE 42
3. NFR 99211
4. DIN 53571
5. NFR 99211-80
6. UL94

1.03 SUBMITTALS

A. Submit the following supporting data.

1. Product Data: For installation instructions.

B. System Description

1. Gaskets will be cut and wrapped from 36" rolls of neoprene sheets and layered to reach desired thickness.

C. Shop Drawings

1.04 DELIVERY, STORAGE, AND HANDLING

A. Gasket material should preferably be covered so that light, radiation, and humidity vapors cannot get into the material.

B. Ideal storage temperature is 70° F.

PART 2 – PRODUCTS

2.01 MANUFACTURER

A. Allstate Gasket, Inc.
31 Prospect Place
Deer Park, New York 11729-3713
Tel: (631) 254-4050
Fax: (631)254-4330
http://www.allstategasket.com/info_gasket_material_style-1119.asp

1. Product: Allstate Gasket Neoprene Sheet Style 1119

B. RH Nuttall Limited
Great Brook Street
Nechells Green
Birmingham
B7 4EN
Tel: (0121) 359-2484
Fax: (121) 359-4439
Email: sales@rhnuttall.co.uk
http://www.rhnuttall.co.uk/Welcome.html

1. Product: RH Nuttall Closed Cell Expanded Neoprene foam

2.02 DESCRIPTION

A. Product: Allstate Gasket Neoprene Sheet Style 1119
   1. Neoprene is a polymer that provides oil, weather, oxidation and sunlight resistance.

B. Product: RH Nuttall Closed Cell Expanded Neoprene foam
   1. General purpose, medium density, closed cell neoprene foam. A suitable material for applications where resistance to ozone, sunlight, UV and oxidation is of paramount importance. Features include a closed cell structure making it impermeable to air and water. Good ageing properties. Limited resistance to mineral oils and a weak resistance to petrol.

2.03 MATERIALS

A. 30' roll of Neoprene: Allstate Gasket Neoprene Sheet Style 1119
   1. Thickness: 1-1/4"
   2. Width: 48"
   3. Elongation: 100%
   4. Tensile: 1000

B. Neoprene strip adhesive: RH Nuttall Closed Cell Expanded Neoprene foam
   1. Typical Thickness: 50 mm
   2. Color: Black
   3. Cellular Structure: Closed Cell
   4. Density: 150 / 170kg / m3
   5. Ozone Resistance: No cracking
   6. Self adhesive backing

2.03 FABRICATION

A. Gaskets will be custom fitted per shop drawings to fit between rib modules.

2.04 FINISHES

A. Finish will be black.

PART 3 – EXECUTION

3.01 EXAMINATION

A. Do not install wet, molded, or damaged materials.

B. Make sure surfaces have been properly cleaned.

3.02 INSTALLATION

A. Cut one continuous piece for the curve profile of house.
   1. End Seam to be located at the lowest point of each modular.

B. Placed in between each modular to form a water-tight seal.

C. Comply with manufacturers installation instructions.

END OF SECTION

SECTION 07 92 00
JOINT SEALANTS

PART 1 – GENERAL

1.01 SUMMARY

A. Section includes
1. Silicon Sealant

B. Related Requirements
1. Section 07 91 13: Joint Gaskets.

1.02 REFERENCES

A. ASTM C 920, Class 25, Type S, Grade NS

1.03 SUBMITTALS

A. Submit the following supporting data.
1. Product Data: Installation instructions indicating compliance with requirements.

1.04 DELIVERY, STORAGE, AND HANDLING

A. Do not use hardened or watered down sealant.

B. Store at temperatures below 90° F and in a dry area.

PART 2 – PRODUCTS

2.01 MANUFACTURER

A. DAP Products Inc.
2400 Boston Street
Suite 200
Baltimore, Maryland 21224
Tel: (410) 675-2199
Toll Free: (800) 543-3840

Fax: (410) 534-2650
http://www.dap.com/product_details.aspx?BrandID=159&SubcatID=25

2.02 DESCRIPTION

A. DAP 100% Silicone Sealant Rubber Sealant is an all-purpose, one component, acetoxy cure sealant ideal for indoor/outdoor use. It provides a watertight, flexible seal that won't crack, crumble or shrink. Once cured, it is unaffected by temperature extremes (-40°F to 400°F). It has a 50 year durability guarantee.

2.03 PERFORMANCE

A. The DAP 100% Silicone Sealant Rubber Sealant meets the requirements of FDA Regulation No. 21 CFR 177.2600 when it is cured and washed.

B. Not recommended for use on cementitious materials or surfaces that might bleed oils, plasticizers or solvents. Substrates made of methylmethacrylate, polycarbonate, polypropylene, polyethylene and polytetrafluoroethylene do not allow for best adhesion and compatibility with sealant. Try test area before using.

C. Not recommended for use on brass, copper, magnesium, zinc, iron, galvanized metals or other surfaces prone to attack by weak acids.

D. Do not use where abrasion and physical abuse are encountered.

2.03 MATERIALS

1. Silicone Rubber Sealant: DAP 100% Silicone Rubber Sealant
2. Color: Clear

PART 3 – EXECUTION

3.01 EXAMINATION

A. Prepare a clean, dry surface which is free of loose debris, dust, dirt, soap, oil or grease.

B. Do not install wet, molded, or damaged materials.

3.02 PREPARATION

A. Clean surfaces from dirt frost, moisture, grease, oil, wax, lacquer, paint, or other foreign matter that would tend to destroy or impair adhesion. Remove oil and grease with solvent. Surfaces must be wiped dry with clean cloths. When resealing an existing joint, remove existing caulk or sealant prior to applying new sealant. For surface types not listed below, contact sealant manufacturer for specific recommendations.

B. When using 10.1 oz cartridge, cut nozzle at 45° angle to desired bead size. Puncture inner foil seal. Load into caulking gun.

3.02 INSTALLATION

A. Comply with manufacturer installation instructions for best results.

3.03 FINAL CLEANING

A. Upon completion of sealant application, remove remaining smears and stains and leave the work in a clean and neat condition.

B. Remove excess uncured sealant from surfaces and tools with mineral spirits. Wash hands with soap and water. Cured sealant must be cut or scraped away..

END OF SECTION

DIVISION 08 OPENINGS

SECTION 08 16 00
COMPOSITE DOORS

PART – GENERAL

1.01 SUMMARY

A. This section includes fiberglass reinforced plastic (FRP) doors and fiberglass resin transfer molded door frames.

B. Related Requirements
   1. Section 06 80 00: Composite Fabrications.
   2. Section 08 70 00: Hardware.

1.02 REFERENCES

A. National Fire Protection Association (NFPA)
   1. NFPA 252: Standard Methods of Fire Tests of Door Assemblies.

B. Underwriters Laboratories, Inc. (UL)
   1. UL10B: Standard for Fire Tests of Door Assemblies
   2. UL 10C: Standard for Positive Pressure Fire Tests of Door Assemblies.

C. Uniform Building Code Standard 7-2 (UBC).
   1. UBC 7-2 (1994): Fire Tests of Door Assemblies
   2. UBC 7-2 (1997): Fire Test of Door Assemblies.

1.03 Qualifications

A. Manufacturer Qualifications: A company specialized in the manufacture of fiberglass reinforced plastic (FRP) doors and frames as specified herein with a minimum of 30 years documented experience and with a record of successful in-service performance for the applications as required for this project.

B. Installer Qualifications: An experienced installer who has completed fiberglass door and frame installations similar in material, design, and extent to those indicated and whose work has resulted in construction with a record of successful in-service performance.

C. Source limitations: Obtain fiberglass reinforced plastic doors and resin transfer molded fiberglass frames through one source fabricated from a single manufacturer, including fire rated fiberglass frames. This ensures complete uniformity of physical properties and consistency in the resin chemistry tailored for this application.

D. Source limitations: Hardware and accessories for all FRP doors as specified in Section 08710 shall be provided and installed by the fiberglass door and frame manufacturer.

E. Source Limitations: Glass for windows in doors shall be furnished and installed by door and frame manufacturer in accordance with related section, Division 8, Glazing.

1.04 SUBMITTALS

A. Product Technical Data Including:
   1. Acknowledgment that products submitted meet requirements of standards referenced.
   2. Manufacturer shall provide certificate of compliance with current local and federal regulations as it applies to the manufacturing process.
   3. Manufacturer's installation instructions.
   4. Schedule of doors and frames indicating the specific reference numbers used on the owner's project documents, noting door type, frame type, size, handing and applicable hardware.
   5. Details of core and edge construction. including factory construction specifications.
   6. Certification of manufacturer's qualifications.

B. Submittal Drawings for Customer Approval Shall be Submitted Prior to Manufacture and Will Include the Following Information and Formatting:
   1. Summary door schedule indicating the specific reference numbers as used on owner's drawings, with columns noting door type, frame type, size, handing, accessories and hardware.
   2. A drawing depicting front and rear door elevations showing hardware with bill of material for each door.
   3. Drawing showing dimensional location of each hardware item and size of each door.
   4. Individual part drawing and specifications for each hardware item and FRP part or product.
   5. Construction and mounting detail for each frame type

C. Samples:
   1. Provide one complete manufactured door sample which represents all aspects of the typical manufacturing process, including molded in gelcoat color and face plate construction. One edge should expose the interior of the door depicting the unique u-shaped continuous piece stile and rail, hardware reinforcement and core material.

D. Operation and Maintenance Manual
   1. Include recommended methods and frequency for maintaining optimum condition of fiberglass doors and frames under anticipated traffic and use condition.
   2. Include one set of final as built drawings with the same requirements as mentioned in Section B above.
   3. Include certificate of warranty for door and frame listing specific door registration numbers.
   4. Include hardware data sheets and hardware manufacturer's warranties.

1.05 DELIVERY, STORAGE, AND HANDLING

A. Each door and frame shall be delivered individually crated for protection from damage in cardboard containers, clearly marked with project information, door location, specific reference number as shown on drawings, and shipping information. Each crate shall contain all fasteners necessary for installation as well as complete installation instructions.

B. Doors shall be stored in the original container on edge, out of inclement weather for protection against the elements.

C. Handle doors pursuant to the manufacturer's recommendations as posted on outside of crate.

1.06 WARRANTY

A. Warranty all fiberglass doors and frames for a period of 25 years against failure due to corrosion. Additionally, warranty all fiberglass doors and frames on materials and workmanship for a period of 10 years, including warp, separation or delamination, and expansion of the core.

B. On- site assistance available.

PART 2 – PRODUCTS

2.01 MANUFACTURERS

A. Chem-Pruf Door Co., Ltd.,
   P.O. Box 4560
   Brownsville, Texas 78523
   Phone: 1-800-444-6924-7943
   Fax: 956-544-7943
   www.chem-pruf.com

B. Substitutions may be considered provided manufacturer can comply with the specifications as written herein and said products are manufactured in the United States of America. Requests for substitution must be submitted in writing no less then 10 days prior to bid date. Substitution request to include a physical sample and written documentation that product will meet the specific manufacturing methods as highlighted below.

2.02 FRP DOORS

A. Doors shall be made of fiberglass reinforced plastic (FRP) using Class 1 premium resin with no fillers that is specifically tailored to resist chemicals and contaminants typically found in food processing applications. Doors shall be 1 ¾ inch thick and of flush construction, having no seams or cracks. All doors up to 4'0 x 8'0 shall have equal diagonal measurements. For consistency in the resin chemistry tailored for this application and to maintain the same physical properties throughout the structure, all fiberglass components including face plates, stiles and rails and frames must be fabricated by the same manufacturer. Components obtained through various outside sources for plant assembly will not be accepted.

B. Door Plates shall be 0.125 inch thick minimum, molded in one continuous piece, starting with 25 mil gelcoat of the color specified, integrally molded with multiple layers of 1.5 ounces per square foot fiberglass mat and one layer of 18 ounce per square yard fiberglass woven roving. Each layer shall be individually laminated with resin as mentioned above. Door plate weight shall not be less than 0.97 lbs per square foot at a ratio of 30/70 glass to resin. Plate alone to withstand Large Missile Impact per FBC TAS 201. Face plates manufactured using the pultrusion process does not allow for a smooth molded gelcoat finish, the use of woven roving for adequate plate thickness, strength and weight, or the appropriate glass to resin ratio and will not meet the quality standards of this project.

C. Stiles and Rails shall be constructed starting from the outside toward the inside, with a matrix of at least three layers of 1.5 ounce per square foot of fiberglass mat. The stile and rail shall be molded in one continuous piece to a U-shaped configuration and to the exact dimensions of the door. In this manner there will be no miter joints and disparate materials used to form the one-piece stile and rail.

D. Core materials option to be as specifically requested.

E. Internal Reinforcement shall be a dense matrix of cloth glass fibers and premium resin with a minimum hinge screw holding value of 1000 lbs per screw.

F. Finish of door frame shall be identical with 25 mil resin-rich gelcoat of the specified color integrally molded in at time of manufacture resulting in a smooth gloss surface that is dense and non-porous. To achieve

optimum surface characteristics, the gelcoat shall be cured within a temperature range of 120F to 170F creating an impermeable outer surface, uniform color throughout, and a permanent homogeneous bond with the resin/fiberglass substrate beneath. Only the highest quality gelcoat will be used to ensure enduring color and physical properties. Paint and/or post application of gelcoat result in poor mechanical fusion and will be deemed unacceptable for this application. The finish of the door and frame must be field repairable without compromising the integrity of the original uniform composite structure, function or physical strength.

G. Transoms shall be identical to the doors in finish, construction, materials, thickness and reinforcement.

H. Door shall meet Forced Entry test pursuant to FBC requirement SFBC 3603.2 300 lb test.

2.03 FRP FRAMES

A. Frames (rated and non-rated) shall be fiberglass and manufactured using the resin transfer method creating one solid piece (no voids) with complete uniformity in color and size. Beginning with a minimum 25 mil gelcoat layer molded in and a minimum of two layers of continuous strand fiberglass mat saturated with resin, the frame will be of one-piece construction with molded stop. All frame profiles shall have a core material of 2 psf polyurethane foam. Metal frames or pultruded fiberglass frames will not be accepted.

B. Finish of frame shall be identical to the door with 25 mil resin-rich gelcoat of the specified color integrally molded in at time of manufacture. To achieve optimum surface characteristics, the gelcoat shall be cured within a temperature range of 120F to 170F creating an impermeable outer surface, uniform color throughout, and a permanent homogeneous bond with the resin/fiberglass substrate beneath. Only the highest quality gelcoat will be used to ensure enduring color and physical properties. Paint and/or post application of gelcoat result in poor mechanical fusion and will be deemed unacceptable for this application. The finish of the door and frame must be field repairable without compromising the integrity of the original uniform composite structure, function or physical strength.

C. Jamb/Header connection shall be mitered for tight fit. Optional seamless one piece frame construction as indicated on the project schedules and related details.

D. Internal Reinforcement shall be continuous within the structure to allow for mounting of specified hardware. Reinforcing material shall be a dense matrix of cloth glass fibers and premium resin with a minimum hinge screw holding value of 1000 lbs per screw. All reinforcing materials shall be completely encapsulated. Documented strength of frame screw holding value after third insert must be submitted. Dissimilar materials, such as steel, will be deemed unacceptable as reinforcement for hardware attachment.

E. Mortises for hardware shall be accurately machined by CNC to hold dimensions to +/- 0.010 inch in all three axis.

F. Hinge pockets shall be accurately machined by CNC to facilitate heavy duty hinges at all hinge locations, using shims when standard weight hinges are used.

2.04 HARDWARE

A. See Section 08 70 00

B. The special nature of this material requires that all related hardware as specified must be furnished and installed by the door frame manufacturer to maintain product quality and function as well as to ensure sufficient support/reinforcement, precision tooling and proper sealing methods are provided.

PART 3 – EXECUTION

3.01 INSTALLATION CONDITIONS

A. Verification of Conditions
   1. Verify openings are correctly prepared to receive doors and frames.
   2. Verify openings are correct size and depth in accordance with submittal drawings.

3.02 EXAMINATION

A. Door installer shall examine conditions under which construction activities of this section are to be performed and submit a written report to general contractor if conditions are unacceptable.

B. General Contractor shall submit two copies of the installer's report to the architect within 24 hours of receipt.

C. Installer shall not proceed with installation until all unacceptable conditions have been corrected.

3.03 INSTALLATION

A. Door shall be delivered at job site individually crated. Each crate to be clearly marked with the specific opening information for quick and easy identification.

B. All single doors to be shipped completely assembled in the frame with hardware installed. Double doors to be prehung at the factory to ensure a proper fit and that hardware functions properly, then broken down for shipping purposes. If unitization is not provided by manufacturer, installation of door and frame systems should be made by a professional hardware installer, certified by a nationally recognized door hardware entity.

C. Install door opening assemblies in accordance with shop drawings and manufacturer's printed installation instructions, using installation methods and materials specified in installation instructions.

D. Field alteration of doors or frames to accommodate field conditions is strictly prohibited.

E. Site tolerances: Maintain plumb and level tolerance specified in manufacturer's printed installation instructions.

F. Fire labeled doors and frames must be installed in strict accordance with manufacturer's instructions and the latest revision of NFPA 80.

3.04 ADJUSTING

A. Adjust doors in accordance with the door manufacturer's maintenance instructions to swing open and shut without binding and to remain in place at any angle without being moved by gravitational influence.

B. Adjust door hardware to operate correctly in accordance with hardware manufacturer's maintenance instruction.

3.03 CLEANING

A. Clean surfaces of door opening assemblies and exposed door hardware in accordance with respective manufacturer's maintenance instructions.

3.04 PROTECTION OF INSTALLED PRODUCTS

A. Protect door opening assemblies and door hardware from damage by subsequent construction activities until final inspection.

END OF SECTION

SECTION 08 35 15
FOLING DOORS AND GRILLES

PART 1 - GENERAL

1.01 SUMMARY

A. Section Includes: Engineered sliding/folding aluminum and glass door system.

1.02 REFERENCES

A. American Architectural Manufactures Association (AAMA):
1. AAMA 611, Voluntary Specification for Anodized Architectural Aluminum.
2. AAMA 2604, Voluntary Specifications, Performance Requirements and Test Procedures for Pigmented Organic Coatings on Aluminum Extrusions and Panels.
3. AAMA 1303.5, Voluntary Specifications for Forced Entry Resistant Aluminum Sliding Glass Doors.

B. American National Standards Institute (ANSI):
1. ANSI Z97.1, Safety Performance Specifications and Methods of Test for Safety Glazing Material Used In Buildings.

C. American Society for Testing and Materials (ASTM):
1. ASTM E 283, Test Method for Rate of Air Leakage through Exterior Windows, Curtain Walls, and Doors by Uniform Static Air Pressure Difference.
2. ASTM E 330, Test Method for Structural Performance of Exterior Windows, Curtain Walls, and Doors by Uniform Static Air Pressure Difference.
3. ASTM E 547, Test Method for Water Penetration of Exterior Windows, Curtain Walls, and Doors by Cyclic Static Air Pressure Differential.

D. Product Safety Commission (CPSC):
1. CPSC 16CFR-1201, Safety Standard for Architectural Glazing Materials.

E. National Fenestration Rating Council (NFRC):
1. NFRC 100, Procedure for Determining Fenestration Product Thermal Materials.

1.03 SUBMITTALS

A. Detail Drawings: Indicate dimensioning, direction of swing, configuration, swing panels, typical head jamb, side jambs and sill details, type of glazing material, and handle height.

B. Product Data: Manufacturer's literature including independently tested data listing performance criteria and Owner's Manual with installation instructions.

C. Contract Closeout Submittal: Submit Owner's Manual from manufacturer. Identify with project name, location and completion date, type and size of unit installed.

1.04 QUALITY ASSURANCE

A. Manufacturer: Provide complete, precision built, engineered, pre-fitted unit by a single source manufacturer with at least 20 years experience in providing folding/sliding door systems for large openings in the North American market.

1. The manufacturer must have a quality management system registration to the ISO 9001: 2008 standard.
2. The manufacturer must have an environmental management system registration to the ISO 14001: 2005 standard.

B. Performance Requirements: Provide from manufacturer that has independently tested typical units. Testing results to include air infiltration in accordance with ASTM E 283 water penetration in accordance with ASTM E 547, structural loading in accordance with ASTM E 330, and forced entry in accordance with AAMA 1303.5 and CAWM 300-96.

C. Thermal Performance: Unit to comply with the U value, simulated in accordance with NFRC 100, shown in manufacturer's latest published data for the glazing specified.

D. Installer Qualifications: Installer experienced in the installation of manufacturer's products or other similar products for large openings. Installer to provide reference list of at least 3 projects of similar scale and complexity successfully completed in the last 3 years.

1.05 WARRANTY

A. Provide manufacturer's standard warranty against defects in materials and workmanship.

B. Warranty Period: Ten years for rollers and for seal failure of insulated glass supplied. For all other components, one year (two years if unit is installed by manufacturers certified trained installer) from date of delivery by manufacturer.

1.06 SITE CONDITIONS, DELIVERY, STORAGE AND HANDLING

A. In addition to general delivery, storage and handling requirements specified in Section 01600, comply with the following:

1. Deliver materials to job site in sealed, unopened cartons or crates. Protect units from damage. Store material under cover, protected from weather and construction activities.

PART 2 – PRODUCTS

2.01 MANUFACTURER

A. NANA WALL SYSTEMS, INC.
707 Redwood Hwy, Mill Valley, California 94941
Toll Free: (800) 873-5673
Telephone: (415) 383-3148
Fax: (415) 383-0132
Email: info@nanawall.com
www.nanawall.com

2.02 MATERIALS

A. Frames and Panels: From manufacturer's standard profiles, provide head tracks, side jambs, and panels with dimensions shown on drawings.
1. Provide panels with standard one lite
2. Provide standard bottom rail
3. Aluminum Extrusion: Extrusions with nominal thickness of 059" (1.5 mm). Alloy specified as AIMgSi0.5 with strength rated as 6063-T5. Anodized conforming to AAMA 611, powder coated conforming to AAMA 2604.
4. Aluminum Finish: clear anodized

B. Glass:

1. All glass to comply with safety glazing requirements of ANSI Z97.1 and CPSC 16CFR 1201. Provide manufacturer's standard glass with dry glazing: 11/16" (18 mm) insulating Low-E safety
2. Provide manufacturer's standard glass spacers. Provide without capillary tubes.

C. Locking Hardware and Handles:
1. Main entry panel: On the main entry panel for models with a swing panel, provide manufacturer's standard L-shaped handles on the inside and outside, and a lock set with profile cylinder. Operation of lock set is by turn of key from the outside and with a thumb turn from the inside with a three point locking hardware operated by 180º turn of the handle.
2. On all other secondary panels, provide manufacturer's standard flat handle and concealed two point locking hardware operated by 180 degree turn of handle. Face applied flush bolt locking will not be allowed.
3. Handle finish: stainless steel L shaped and flat handles in a brushed satin finish
4. Provide handle height centered at 41 3/8" from bottom of panel.
5. Aluminum locking rods with standard fiber glass reinforced polyamide end caps at top and bottom. Rods to have a stroke of 15/16" (24 mm).
6. If there is more than one unit, keyed alike.

D. Sliding/Folding Hardware: Provide manufacturer's standard combination sliding and folding hardware with top, bottom tracks and threshold. All running carriages to be with sealed, self-lubrication, ball bearing multi-rollers. Surface mounted hinges and running carriages will not be allowed. Weight of panels to be borne by the bottom of the track will not be allowed.
1. For each pair of folding panels: Provide cardanic, independently suspended, four wheeled coated with fiber glass reinforced polyamide upper running carriage and lower guide carriage. Running carriage to be adjustable in height, ¼" up and down.
2. Threshold: Raised sill in the same finish as panel finish
3. Provide on all four corners of panels, die cast zinc multi-functional corner fittings with carriage connectors, hinges and hinge pins as required. Finish: Powder coated, closest match to finish of frame and panels.
4. Adjustment: Provide system capable of specified amount of adjustments without removing panels from tracks.

E. Other Components:

1. Weather stripping: Provide manufacturer's standard double layer EPDM or brush seals with a two layer polyamide fin at both the inner and outer edge of door panels or on frame for sealing between panels and between panel and frame. Single layer weather stripping will not be allowed.
2. Provide machine screws for connecting frame components.

2.03 FABRICATION

A. Use extruded aluminum frame and panel profiles with male-female interlocking, corner connectors and hinges, sliding and folding hardware, locking hardware and handles, glass and glazing and weather stripping as specified herein to make a folding glass wall. Factory pre-assemble at manufacturer standard and ship with all components and installation instructions.

B. Provide other side lites, transoms, corner posts, or single or double doors as per drawings provided.

PART 3 – EXECUTION

3.01 ERECTION

A. Because of the large dimensions involved and the weight and movement of the panels, verify the structural integrity of the header such that the deflection with live load and dead loads is limited to the lesser of L/720 of the span and 1/4" (6mm). Structural support for lateral loads (both wind load and eccentric load when the panels are stacked open) must be provided. It is recommended that all building dead loads be applied to the header prior to installing the NanaWall. If so and if a reasonable amount of time has been allowed for the effect of this dead load on the header, then only the building's live load can be used to meet the above requirements of L/720 or 1/4" (6mm). If not, both the dead and live loads need to be considered.

B. Examine surfaces of openings and verify dimensions; verify rough openings are level, plumb, and square with no unevenness, bowing, or bump on the floor.

C. Installation of units constitutes acceptance of existing conditions.

3.02 INSTALLATION

A. Install frame in accordance with manufacturer's recommendations and installation instructions. Properly flash and waterproof around the perimeter of the opening.

B. Installer to provide appropriate anchorage devices and to securely and rigidly fit frame in place, absolutely level, straight, plumb and square. Install frame in proper elevation, plane and location, and in proper alignment with other work.

C. If necessary, provide drain connections from lower track.

D. Install panels, handles and lock set in accordance with manufacturer's recommendations and installation instructions.

E. If necessary, adjust hardware for proper operation.

END OF SECTION

SECTION 08 70 00
HARDWARE

PART 1 – GENERAL

1.01 SUMMARY

A. Section includes:
1. Miscellaneous screws, nails, nuts and bolts for cabinets.
2. Hinges
3. Locksets and Latch sets
4. Knob Cylinder Locksets
5. Lever Cylinder Locksets
6. Closers
7. Exit Devices

1.02 REFFERENCES

A. American National Standards Institute/Builders Hardware Manufacturers Association (ANSI/BHMA):
1. ANSI/BHMA A156.1 Butts & Hinges.
2. ANSI/BHMA A156.2 Bored and Preassembled Locks and Latches.
3. ANSI/BHMA A156.3 Exit Devices.
4. ANSI/BHMA A156.4 Door Controls - Closers.
5. ANSI/BHMA A156.13 Mortise Locks & Latches.
6. ANSI/BHMA A156.18 Materials & Finishes.
7. ANSI/BHMA A156.21 Thresholds.
8. ANSI/BHMA A156.22 Door Gasketing Systems.
9. ANSI/BHMA A156.26 Continuous Hinges.

B. Submit the following supporting data.
1. Product Data

PART 2 – PRODUCTS

2.01 MANUFACTURER

A. Crown Bolt
1. Miscellaneous screws, nails, nuts and bolts for cabinets.

2. Hinges
3. http://www.crownbolt.com/home/default.asp

B. Schlage
1. Lockset and Latch set
2. http://consumer.schlage.com/Pages/home.aspx

C. Kwikset
1. Knob Cylinder Locksets
2. Lever Cylinder Locksets
3. http://www.kwikset.com/

D. Universal Hardware
1. Closer
2. http://www.universalhardware.com/

2.02 FINISHES

A. Stainless Steel unless specified by the architect.

PART 3 – EXECUTION

3.01 EXAMINATION

A. Compliance with manufactures written data and installation instructions

3.02 INSTALLATION

A. Install hinges to standard hardware location dimension per manufacturer's instructions.

B. Use only manufacturers supplied fasteners. Failure to comply may void manufacturer's warranties.

3.03 ADJUSTING

A. Adjust door hardware for optimum, smooth operating condition.

1. Lubricate hinges and other moving hardware where directed by manufacturer.
2. Adjust door hinges to provide tight fit at contact points with frames.

B. Adjust weather-strip and seals to allow for unobstructed door operation.

C. Adjust thresholds and accessories to allow for unobstructed door operation.

D. Adjust door closers to manufacturer's instructions and as follows:

1. Adjust closing time based on expected usage.
2. Adjust latch speed so door completely closes and latches.
3. Adjust back check accordingly to prevent excessive opening speed.
4. Adjust delay action accordingly to obtain desired delay time.
5. Use 5/32 inch (4 mm) hex wrench to adjust door closer for corresponding door size.
6. Lubricate where directed by manufacturer.

E. Adjust locking components for optimum, smooth operating condition.

1. Lubricate where directed by manufacturer.

F. Adjust installed pull plates and push plates and protection items for proper function.

3.04 PROTECTION

A. Protect installed products until completion of project.

B. Touch up, repair or replace damaged products before Substantial Completion.

END OF SECTION

SECTION 08 91 00
LOUVERS

PART 1 – GENERAL

1.01 SUMMARY

A. Section includes:
1. Shading Louvers

1.02 REFERENCE

A. American Architectural Manufacturers Association (AAMA)
1. AAMA 2605M – Voluntary Specifications, Performance Requirements and Test Procedures for Superior Performing Organic Coatings on Aluminum Extrusions and Panels

PART 2 – PRODUCTS

2.01 MANUFACTURER

A. Equinox Hawaii
Honolulu, HI,
808-271-2545
http://www.equinoxhawaii.com/

2.02 MATERIALS

A. 8" aluminum louver

2.03 FINISHES

A. Exterior Finish: Provide manufacturer's standard factory-applied exterior finish.
1. Color Finish: As indicated by Architect.

2.04 DESIGN CRITERIA

A. Customize construction to have the angle of louver to match the sun path.

PART 3 – EXECUTION

3.01 EXAMINATION

A. Examine roughing-in for plumbing, mechanical, and electrical services, with Installer present, to verify actual locations of services before residential appliance installation.
   1. Proceed with installation only after unsatisfactory conditions have been corrected.

3.02 INSTALLATION

A. General: Comply with manufacturer's written instructions.

END OF SECTION

DIVISION 09 FINISHES
SECTION 09 62 23
BAMBOO FLOORING

PART 1 – GENERAL

1.01 SUMMARY

A. Standard no-added formaldehyde bamboo strip flooring installed by the nail or staple method.

1.02 REFERENCED STANDARDS

A. ASTM – American Society for Testing and Materials

1. ASTM E648: Standard Test Method for Critical Radiant Flux of Floor-Covering Systems Using a Radiant Heat Energy Source
2. ASTM D1037: Standard Test Methods for Evaluating Properties of Wood-Base Fiber and Particle Panel Materials ASTM D3501: Standard Test Methods for Wood-Based Structural Panels in Compression
3. ASTM D3359: Standard Test Method for Measuring Adhesion by Tape Test
4. ASTM D4060: Standard Test Method for Abrasion Resistance of Organic Coatings by the Taber Abraser
5. ASTM D4442: Standard Test Methods for Direct Moisture Content Measurement of Wood and Wood-Base Materials
6. ASTM D5116-06: Standard Guide for Small-Scale Environment Chamber Determinations of Organic Emissions from Indoor Materials/Products

B. NWFA – National Wood Flooring Association: Technical Reference Manual

1.04 SUBMITTALS

A. Reference Section 01 33 00; Submit the following items:
1. Product Data
   a. Each product specified
   b. Installation Adhesive
2. Quality Assurance/Control Submittals:
   a. NWFA Technical Reference Manual.
   b. Proof of bamboo flooring manufacturer's qualifications.
   c. Test Reports: Reports for specified Physical Property Performance Requirements.
3. Shop Drawings: Show installation details including location, layout, fastening method, and transition of each type of flooring and accessory.
4. Samples:

a. 6 inch (150 mm) long strip of flooring material
b. Fasteners
c. One of each specified accessory, minimum 4 inches (100 mm)

1.05 QUALITY ASSURANCE

A. Qualification
1. Manufacturer:
a. Minimum 10 years experience in manufacturing and distributing bamboo flooring products.
b. Member: National Wood Flooring Association, American Bamboo Society, U.S. Green Building Council.
2. Installer: Minimum 5 years experience in hardwood flooring installation.

B. Reference Section 01 40 00; Quality Requirements:
1. Convene meeting at project site within one week of scheduled start of installation with representatives of the following in attendance: Owner, Architect, General Contractor, Sub-Contractor.
2. Review substrate conditions, requirements of related work, requirements for operation of HVAC system, installation instructions, storage and handling procedures, and protection measures.
3. Keep minutes of meeting including responsibilities of various parties and deviations from specifications and installation instructions.
4. Distribute minutes to attendees within 48 hours.

1.06 DELIVERY, STORAGE, AND HANDLING

A. Deliver flooring materials in original unopened cartons.

B. Reference Section 01 60 00: Product Requirements.
1. Deliver flooring after completion of all wet work and after all moisture has dissipated from this work. Wet work includes, but is not limited to, concrete, plaster, tile, drywall, grouting, and painting.
2. Store flooring in a warm, dry, well-ventilated, and weather-tight location.
3. Open the boxes, acclimate, and confirm moisture content compatibility. Flooring should acclimate for a minimum of 72 hours.
4. Do not store directly on concrete or near outside walls.

1.07 PROJECT CONDITIONS

A. The temperature and relative humidity (RH) of the installation area should be stabilized with normal year-round conditions a minimum of one week before installation. For optimum performance manufacturer's recommended temperature range of 50-72°F and an RH of 30-50% should be maintained year-round.

1.08 SCHEDULING

A. These items must be completed before delivery and installation of flooring.

1. Building must be water-tight with all windows and doors installed.
2. Completion of all wet work and after all moisture has dissipated from this work. Wet work includes but is not limited to: concrete, plaster, tile, drywall, grouting, and painting.
3. Environmental and humidity control system is operating for 14 days in installation and storage areas at the temperature and humidity of the occupied building.

1.07 WARRANTY

A. Warranty for Smith & Fong Flooring referenced at www.plyboo.com.

1.10 MAINTENANCE AND PROTECTION

A. Maintain and protect installed work at all times per the manufacturer's instructions.

B. Do not protect the flooring with plastic sheeting or moisture retardant membranes.

C. Use hard surface protection such as hardboard over kraft paper. Tape kraft paper and hardboard to prevent grit infiltration.

PART 2 – PRODUCTS

2.01 MANUFACTURER

A. Smith & Fong Company, San Francisco, CA 94103
Tel: (866) 835-9859
E-mail: sales@plyboo.com
www.plyboo.com

2.02 MATERIALS

A. Bamboo Strip Flooring

1. Species: Moso (Phyllostachys Pubescens)
2. Manufactured without added urea-formaldehyde
3. FSC certified
4. FloorScore certified

5. Edge Configuration: Tongue and groove, 4 sides
6. Type:
   a. Prefinished: 3-5/8 inches wide by 5/8 inches thick by 72 inches in length

B. Installation Adhesive:
1. The following are recommended for Smith & Fong Plyboo® Flooring Products.
   a. Bostik's Best or Bostik's TKO
   b. Mapei 980 or 990
   c. DriTac 7500 Eco-Urethane
   d. W.F. Taylor's MS Plus

C. Fasteners:
1. Comply with both the Manufacturer Installation Instructions and the NWFA's Technical Reference Manual.

PART 3 – EXECUTION

3.01 EXAMINATION

A. Examine substrates for compliance with requirements for installation tolerances, and other conditions affecting performance of flooring.

B. Verify substrate is dry, clean and free of loose material, grease, and other contaminates which may interfere with bonding of adhesive.

C. Do not install bamboo flooring if wood substrate exceeds 12% moisture.

D. Do no install bamboo flooring if moisture variation between substrate and bamboo exceeds 3%.

E. Verify HVAC System is operating and maintaining temperature and humidity conditions in compliance with Manufacturer's Installation Instructions.

F. Coordinate with responsible entity to correct unsatisfactory conditions.

G. Commencement of work by installer is acceptance of substrate conditions.

3.02 PREPARATION

A. Humidity: maintain indoor air humidity levels between 30% and 50% for two weeks before installation and continually thereafter.

B. Temperature: maintain temperature of materials and installation area between 62 degrees and 68 degrees during installation.

C. Acclimatization: Open flooring boxes and remove packing minimum 3 days prior to start of installation.

D. Grind and fill subfloor using methods and materials appropriate to the subfloor construction to eliminate high spots and depressions exceeding 3/16 inch (5 mm) inch in 10 feet (3048 mm).

3.03 INSTALLATION OF FLOORING

A. Flooring: Comply with manufacturer's installation instructions.

B. Adhesive: Comply with adhesive manufacturer's instructions.

3.04 CLEANING

A. Repair or replace damaged installed products.

B. Clean installed products in accordance with manufacturer's instructions prior to Owner's acceptance.

3.05 PROTECTION

A. If glue-down method is used, do not allow foot traffic or heavy furniture on floor for 24 hours or as adhesive manufacturer requires.

B. Protect installed product from damage during construction by covering with heavy kraft-paper or other suitable covering. Do not use non-breathable sheet or film that could cause condensation to form or inhibit proper curing of adhesive. Maintain covering throughout remainder of construction period.

END OF SECTION

SECTION 09 91 00
PAINTING AND COATING

PART 1 – GENERAL

1.01 SUMMARY

A. Section includes:
   1. Exterior Painting
   2. Steel Painting
   3. Cold Galvanized Compound
   4. Coat Primer

B. Related requirements
   1. Section 05 12 00: Steel Framing.

1.02 REFERENCES

A. Submittals
   1. Data Spec Sheet

PART 2 – PRODUCTS

2.01 MAUFACTURER

A. Insl-X Superior Coating Systems
   http://www.insl-x.com/

B. RUST-OLEUM
   http://www.rustoleum.com/

C. ZRC Cold Galvanizing Compound
   http://www.zrcworldwide.com/p_zrc.asp

D. PETTIT
   http://www.pettitpaint.com/catalog_browse.asp?ictNbr=94

2.02 MATERIALS

A. Steel Primer
   1. Acrylic White Waterborne Bonding Primer

B. Galvanizing
   1. RUST-OLEUM Cold Galvanizing Compound, 1 Qt

C. Cold Galvanizing Compound
   1. ZCR Cold Galvanizing Compound

D. Coat Primer
   1. Tie Coat Primer 6627

PART 3 – EXECUTION

3.01 EXAMINATION

A. Examine substrates, areas, and conditions for compliance with requirements for painting and coating product application.

3.02 PREPERATION

A. Remove hardware and hardware accessories, plates, machined surfaces, lighting fixtures, and similar items already installed that are not to be painted. If removal is impractical or impossible because of size or weight of item, provide surface-applied protection before surface preparation and painting

B. Clean and prepare surfaces to be painted in accordance with manufacturer's written instructions for each particular substrate condition and as specified. Allow unseasoned or shiny new wood to weather three months before staining.

C. Mix and prepare paint in accordance with manufacturer's written instructions. Stir paint thoroughly before applying and frequently during application to maintain color consistency.

3.03 ADJUSTING AND CLEANING

A. Cleanup: At the end of each workday, remove empty cans, rags, rubbish, and other discarded materials from project site.

B. Protect work of others, whether being painted or stained or not, against damage from painting and staining. Correct damage by cleaning, repairing or replacing, and painting or restaining as approved by Architect.

C. Provide "Wet Paint" signs to protect new finishes. After completing painting and staining operations, remove temporary protective wrappings provided by others to protect their work.

END OF SECTION

DIVISION 10 SPECIALTIES

SECTION 10 28 00
TOILET, BATH & LAUNDRY ACCESSORIES

PART 1 – GENERAL

1.01 SUMMARY

A. Section includes:
   1. Towel Bars
   2. Towel Rings
   3. Tissue Holders
   4. Shower Door

B. Relating Requirements
   1. Section 06 10 00: Rough Carpentry.

1.02 SUBMITTALS

A. General: Submit the following in accordance with Conditions of Contract and Division 01 specification Sections.

B. Submit the following supporting data.
   1. Product Data: For each accessory type required indicating compliance with requirements, include complete operating and maintenance instructions for each accessory.

1.04 PROJECT CONDITIONS

A. Coordinate the work with location and placement of utilities. Coordinate characteristics of utilities with requirements of accessories.

PART 2 – PRODUCTS

2.01 MANUFACTURERS

A. Sterling Plumbing
   444 Highland Drive
   Kohler, WI 53044
   Tel: 1-800-783-7546

http://www.sterlingplumbing.com/

B. KOHLER Plumbing
444 Highland Drive
Kohler, WI 53044
Tel: 1-800-456-4537
http://www.us.kohler.com/index.jsp

2.03 MATERIALS

A. Sterling Finesse Frameless By-pass Shower Door
1. http://www.sterlingplumbing.com/shower-doors/shower-doors/Finesse-TM-Frameless-By-pass-Shower-Door-5475-59-detail?productNumber=5475-59&resultId=-1910566273-0

B. Kohler Purist toilet tissue holder – K-14444
1. http://www.us.kohler.com/onlinecatalog/detail.jsp?item=7493402&section=2&category=19&retail=false

C. Kohler Purist 18" towel bar – K-14435
1. http://www.us.kohler.com/onlinecatalog/detail.jsp?item=7492502&section=2&category=19&retail=false

D. Kohler Purist towel ring – K-14441:
1. http://www.us.kohler.com/onlinecatalog/detail.jsp?item=7493202&section=2&category=19&retail=false

2.02 FINISHES

A. Exterior Finish: Provide manufacturer's standard factory-applied exterior finish, impervious to cleaning materials commonly used on kitchen appliances, over cleaned and pretreated steel sheet.
1. Color and Gloss: Stainless-steel indicated by architect.

PART 3 – EXECTUTION

3.01 EXAMINATION

A. Proceed with installation only after unsatisfactory conditions have been corrected.

3.02 INSTALLATION

A. General: Comply with manufacturer's written instructions.

B. Built-in Equipment: Securely anchor units to supporting cabinets or countertops with concealed fasteners. Verify that clearances are adequate for proper functioning and rough openings are completely concealed.

C. Freestanding Equipment: Place units in final locations after finishes have been completed in each area. Verify that clearances are adequate to properly operate equipment.

3.03 ADJUSTING AND CLEANING

A. Test each item of bathroom accessories to verify proper operation. Make necessary adjustments.

B. Verify that accessories required have been furnished and installed.

C. Remove packing material from residential applL.0 and leave units in clean condition and ready.

END OF SECTION

DIVISION 11 EQUIPMENT

SECTION 11 31 00
RESIDENTIAL APPLIANCES

PART 1 - GENERAL

1.01 SUMMARY

A. Section includes a:
   1. Cooktop
   2. Dishwasher
   3. Washer/dryer
   4. Refrigerator
   5. Freezer
   6. Countertop/Built-In Combined Convection & Microwave Oven

B. Related Requirements
1. Section 06 10 00: Rough Carpentry.
2. Section 10 28 00: Toilet, Bath, and Laundry Accessories.
3. Division 22 Sections: Plumbing Fixtures and Equipment.
4. Division 26 Sections: Basic Electrical Materials and Methods.

1.02 SUBMITTALS

A. General: Submit the following in accordance with Conditions of Contract and Division 01 specification Sections.

B. Submit the following supporting data.

   1. Product Data: For each appliance type required indicating compliance with requirements, include complete operating and maintenance instructions for each appliance.
   2. Manufacturers' installation guides and shop drawings.

1.03 QUALITY ASSURANCE

A. Installer Qualifications: An experienced installer who is an authorized representative of the residential appliance manufacturer for installation of appliances required for this Project.

B. Electrical Appliances: Listed and labeled as defined in NFPA 70, Article 100, by a testing agency acceptable to authorities having jurisdiction.

C. UL and NEMA Compliance: Provide electrical components required as part of residential appliances that are listed and labeled by UL and that comply with applicable NEMA standards.

D. Deliver appliances only after utility rough-is in and construction are complete.

1.04 PROJECT CONDITIONS

A. Coordinate the work with location and placement of utilities. Coordinate characteristics of utilities with requirements of residential appliances.

PART 2 - PRODUCTS

2.01 MANUFACTURERS

A. Wolf Appliance, Inc.
Toll Free: (800) 222-7820
http://www.wolfappliance.com/

B. Fisher & Paykel Appliances Inc.
5900 Skylab Road
Huntington Beach, CA 92647
Tel: 1-888-936-7872
Fax: 1-800-547-1971
http://www.fisherpaykel.com/

C. Living Direct, Inc.
500 N. Capital of Texas Hwy
Building 5
Austin, Texas 78746
Tel: 800-297-6076
Fax: 512-467-2101
http://www.compactappliance.com/

D. AGA Marvel
1260 E. Van Deinse
Greenville, MI 48838

Toll Free: 800-223-3900
Fax: 616-754-9690
http://www.lifeluxurymarvel.com/?utm_source=google&utm_medium=ppc&utm_content General&utm_campaign=Brand1&gclid=CPX14rOY36cCFSU6gwoduncyIA

E. Sub-Zero, Inc.
Toll Free: (800)222-7820
http://www.subzero.com/about/index.aspx

F. Panasonic Corporation of North America
Consumer Affairs Division
Panazip 2F-3
One Panasonic Way
Secaucus, NJ 07094
Tel: 1-800-211-7262
http://www.panasonic.com/

2.01 Products:

A. Wolf CT15I/S Stainless Cooktop
1. Overall Width: 15”
2. Overall Height: 3-1/2”
3. Overall Depth: 21
4. Induction Elements: Two
5. Countertop Cut-Out Width: 13-3/8”
6. Countertop Cut-Out Depth: 19-1/4”
7. Maximum Element Power: 1200 W (front), 1800W with 3000 W boost (rear)
8. Element Diameters: 6-3/4" and 8-3/4”
9. Electrical Requirements: 240/208 V AC, 50/60 Hz, 20 amp circuit
10. Conduit: 4’ Flexible 3-wire
11. Electrical Rating: 3.6 kW at 240 V AC, 3.1 at 208 V AC
12. Stainless steel trim finish

http://www.wolfappliance.com/InductionCooktops/CT15IInductionCooktop

B. Fisher & Paykel DD24SCHTX6V2 Single DishDrawer Tall Dishwasher
1. Overall Height: 17 - 18-15/16”
2. Overall Width: 23-9/16”
3. Overall Depth of Product: 22-7/8”

4. Energy Rating: Energy Star rated
5. Uses as little as 1.95 gallons of water per drawer
6. Finish: EZKleen Stainless Steel

http://www.fisherpaykel.com/product/dishwashing/dishwashing/?productuid=4F7E474F-A582-F35B-FA2294D4C39761CC

C. Triton TEZ3720CEEP Ventless Combination Washer/Dryer
   1. Dimensions: 33.75" H x 23.25" W x 23.25" D
   2. Electrical: 115V / 60Hz/ 12.8A
   3. Energy Star Rated

   http://www.compactappliance.com/Triton-by-Equator-Ventless-Combination-Washer-Dryer-White/TEZ3720CEEW,default,pd.html

D. Marvel 61ARM-BS-F Undercounter Refrigerator
   1. Dimensions: 34" H x 23-7/8" W x 24-3/8" D
   2. Energy Guide Information: 370 kWh/yr
   3. Color and Finish: Black Cabinet, full wrap stainless steel door

   http://www.lifeluxurymarvel.com/products/refrigeration/freezers/61arm.php

E. Sub-Zero 700BF(I) Freezer Drawers
   1. Overall Width: 27"
   2. Overall Height: 34-1/2"
   3. Overall Depth: 24"
   4. Drawer Clearance: 19-1/2"
   5. Freezer Capacity: 5.1 cu ft.
   6. Opening Width: 27"
   7. Opening Height: 34-1/2"
   8. Opening Depth: 25"
   9. Electrical Requirements: 115 V AC, 60 Hz, 15 amp dedicated circuit
   10. Plumbing Requirements: ¼" OD copper line, 20-4100 psi
   11. Finish: Stainless Steel

   http://www.subzero.com/IntegratedRefrigeration/700BFDrawers

F. Panasonic NN-C994S Genius Prestige Countertop/Built-In Combined Convection & Microwave Oven
   1. Oven Capacity: 1.5 cu. Ft.
   1. Cooking Power: 1100W
   2. Turntable Diameter: 15"

3. Power Requirements: 120V, 60Hz, 12.8A, 1500W, AC only
4. Cavity Dimensions: 9-1/2" H x 16-14" W x 16-3/16" D
5. Unit Dimensions: 14-13/16" H x 23-7/8" W x 19-5/16" D
6. Color: Stainless Steel Finish

http://www2.panasonic.com/consumer-electronics/shop/Home-Appliances/Microwave-Ovens/Countertop-Microwaves/model.NN-CD989S_11002_7000000000000005702

G. Exterior Finish: Provide manufacturer's standard factory-applied exterior finish, impervious to cleaning materials commonly used on kitchen appliances, over cleaned and pretreated steel sheet.
   1. Color and Gloss: As indicated by manufacturer's designations.

PART 3 - EXECUTION

3.01 EXAMINATION

A. Examine roughing-in for plumbing, mechanical, and electrical services, with Installer present, to verify actual locations of services before residential appliance installation.

   1. Proceed with installation only after unsatisfactory conditions have been corrected.

3.02 INSTALLATION

A. General: Comply with manufacturer's written instructions.

B. Built-in Equipment: Securely anchor units to supporting cabinets or countertops with concealed fasteners. Verify that clearances are adequate for proper functioning and rough openings are completely concealed.

C. Freestanding Equipment. Place units in final locations after finishes have been completed in each area. Verify that clearances are adequate to properly operate equipment.

D. Utilities: Refer to Division 15 and 16 for plumbing and electrical requirements.

3.03 ADJUSTING AND CLEANING

A. Test each item of residential appliances to verify proper operation. Make necessary adjustments.

B. Verify that accessories required have been furnished and installed.

C. Remove packing material from residential applL.0 and leave units in clean condition, ready

END OF SECTION

DIVISION 12 FURNISHINGS

SECTION 12 21 16
VERTICAL BLINDS

PART 1 – GENERAL

1.01 SUMMARY

A. Section includes:
1. Vertical Blinds for Nanawalls.

PART 2 – PRODUCTS

2.01 MATERIALS

A. Vertical Blinds
1. Basis-of-design Product: Subject to compliance with requirements, provide product of the manufacturer listed below or comparable product of the following:
2. Hunter Douglas Contract.
3. Vanes: Aluminum, alloy and temper recommended by producer for type of use and finish indicated: with crowned profile and not less than 3/8 inch (9.5mm) overlap when rotated fully closed.
4. Width: 3-1/2 inches (89mm)
5. Headrail: Channel, extruded aluminum with long edge returned or rolled and ends capped. Headrail encloses operating mechanisms including carrier-spacing mechanism that provides uniform vane spacing when blinds are traveled fully across headrail (closed).
6. Manual Traverse Control: Wand
7. Manual Rotation Control: Wand
8. Draw and Stack: Two way, center split

2.02 FINISHES

A. Color: Satin White

PART 3 – EXECUTION

3.01 INSTALLATION

A. General: Comply with manufacturer's written instructions.

B. Built-in Equipment: Securely attach wall brackets about shaded destination. 62”-98” length shading blinds need 3 brackets for support.

C. Attaching Vanes through stem slots. Consistently facing the same directions.

D. Attaching the tension pulley securely to the wall or floor to prevent movement.

3.02 ADJUSTING AND CLEANING

A. General rules when cleaning any vanes are to clean one vane at a time. Detach one vane and place it on a flat surface. Clean as specified. Attach the vane back on the head rail. Soaking vanes may cause them to lose their seizing, fire retardant, and soil repellant additives.

B. Never use hot water to clean vanes. Never machine wash or dry clean the vanes. Never use a solvent cleaner. Never use a dryer, or hang or fold vanes over a clothes line. Never wring crush vanes to dry them.

END OF SECTION

SECTION 12 31 00
MANUFACTURED METAL CASEWORK

PART 1 – GENERAL

1.01 SUMMARY

A. Section includes:
1. Metal fabrication of:
a. Stainless steel cabinets
b. Stainless steel countertops
2. Deliver, store, and handle metal casework in a manner that prevents damage or disfigurement

1.02 SUBMITTALS

A. Standard Color Charts for metal cabinets showing color and finish selections.

B. Shop drawings

Part 2 – PRODUCTS

2.01 Materials

A. Stainless steel 304:
1. Kitchen Cabinets
2. Bathroom Cabinets
3. Bathroom Vanity
a. Integrated seamless sink
4. Kitchen Counter Top
a. Integrated seam less sink

2.02 FINISHES

A. Polished stainless Steel
1. Indicated by Architect.

2.03 CABINET FABRICATION

A. General
   1. Provide wall and base cabinets fabricated from 0.85 millimeter 22-gauge, cold-rolled furniture steel, except for backs of cabinets and backs of doors provide 0.70 millimeter 24-gauge steel.
   2. Construct cabinets with no raw edges or exposed flanges, with welds being flush and ground smooth on all exposed surfaces.
   3. Provide concealed fasteners at all exposed exterior surfaces.
   4. Provide doors and drawer fronts with panelized double-wall construction, not less than 15 millimeter 1/2-inch thick, with a sound-absorbing material adhered between the walls.
   5. Equip doors and drawers with rubber or plastic silencers and bumpers.
   6. Provide adjustable shelving as indicated.

B. Craftsmanship
   1. Align end panels, top rails, bottoms and vertical posts at intersections in same plane, without overlap. Grind exposed welds flush and smooth.

PART 3 – EXECUTION

3.01 EXAMINATION

A. Before installing casework, verify wall and floor surfaces covered by casework have been finished. Verify location and size of mechanical and electrical services as required. Verify reinforcement of walls and partitions for support and anchorage of casework

3.02 INSTALLATION

A. General: Comply with manufacturer's written instructions.

B. Install casework as described in manufacturer's installation drawings in accordance with design intent.
   1. Level base cabinets by adjusting leveling screws.
   2. Secure cases permanently to floor and wall construction, where applicable.
   3. Secure wall cases in position with screws to blocking, where applicable.
   4. Bolt adjoining cases together.
   5. Align doors, adjust hardware, and clean surfaces

3.03 ADJUSTING AND CLEANING

A. Removing crafting and packing materials from premises. Wipe down surfaces to remove fingerprints and markings and leave in clean condition

END OF SECTION

DIVISION 21 FIRE SUPPRESSION

SECTION 21 09 00
INSTRUMENTATION AND CONTROL FOR FIRE-SUPPRESSION SYSTEMS

PART 1 – GENERAL

1.01 SUMMARY

A. Section Includes:
1. Jockey Pump Controller.

B. Related Requirements
1. Section 21 13 00: Fire Suppression Sprinkler Systems.
2. Section 21 31 13: Electric-Drive, Centrifugal Fire Pumps.
3. Section 21 41 23: Ground Suction Storage Tanks for Fire-Suppression Water.

1.02 REFERENCES

A. Reference Standards
1. IRC – International Residential Code.
2. NFPA – National Fire Protection Association.
3. UL – Underwriters Laboratories Inc.

1.03 SUBMITTALS

A. Product Data
1. Submit product sheets and specifications for Jockey Pump Controller.

1.04 QUALITY ASSURANCE

A. Certificates
1. UL certification of Jockey Pump Controller.
2. Compliance with IRC Section P2904 or NFPA 13D.

PART 2 – PRODUCTS

2.01 MANUFACTURERS

A. Firetrol® (or other manufacturer with similar product meeting all codes and requirements) (www.firetrol.com).

2.03 MATERIALS

A. Firetrol® FTA500 Jockey Pump Controllers.
   1. For use with Fire-Suppression system to regulate pump and control system pressure.

PART 3 – EXECUTION

3.01 INSTALLATION

A. To be installed and tested to Manufacturer's requirements and IRC code.

END OF SECTION

SECTION 21 13 00
FIRE-SUPPRESSION SPRINKLER SYSTEMS

PART 1 – GENERAL

1.01 SUMMARY

A. Section Includes
1. Fire Sprinklers.
2. Fire Sprinkler Piping.
3. Valves and Fittings.
4. Mounting Brackets.

B. Related Requirements
1. Section 21 31 13: Electric-Drive, Centrifugal Fire Pumps.
2. Section 21 41 23: Ground Suction Storage Tanks for Fire-Suppression Water.

1.02 REFERENCES

A. Reference Standards
1. IRC – International Residential Code.
2. NFPA – National Fire Protection Association.
3. UL – Underwriters Laboratories Inc.
4. ASTM – American Society for Testing and Materials

1.03 SUBMITTAL

A. Product Data
1. Submit product sheets and specifications for all products included in section.

B. Shop Drawings
1. Submit shop drawings of Fire-Suppression System.

1.04 QUALITY ASSURANCE

A. Certificates
1. UL certification.
2. Compliance with IRC Section P2904 or NFPA 13D.

1.05 WARRANTY

A. Manufacturer's Warranty
   1. Fire Sprinklers: Products manufactured by Tyco® Fire Suppression & Building Products (TFSBP) are warranted solely to the original Buyer for ten (10) years against defects in material and workmanship when paid for and properly installed and maintained under normal use and service. This warranty will expire ten (10) years from date of shipment by TFSBP. No warranty is given for products or components manufactured by companies not affiliated by ownership with TFSBP or for products and components which have been subject to misuse, improper installation, corrosion, or which have not been installed, maintained, modified or repaired in accordance with applicable Standards of the National Fire Protection Association, and/or the standards of any authorities having jurisdiction. Materials found by TFSBP to be defective shall be either repaired or replaced, at TFSBP's sole option. TFSBP neither assumes, nor authorizes any person to assume for it, any other obligation in connection with the sale of products or parts of products. TFSBP shall not be responsible for sprinkler system design errors or inaccurate or incomplete information supplied by Buyer or Buyer's representatives.
   2. Fire Sprinkler Piping and Accessories: Shall cover the repair or replacement of properly installed tubing and fittings proven defective as well as incidental damages. Warranty period for PEX tubing and subsequent system shall be 25 year non-prorated warranty against failure due to defect in material or workmanship, beginning with the date of installation. It is the installer's responsibility to avoid mixing fittings manufactured by others as it will reduce the owner's warranty.

PART 2 – PRODUCTS

2.01 MANUFACTURERS

A. Sprinklers Heads:
   Tyco
   www.tyco-fire.com

B. Fire Sprinkler & Copper Piping Provider
   Uponor® PEX piping
   www.uponor-usa.com

C. Valves and Fittings:
   Uponor® PEX valves and fittings
   www.uponor-usa.com

D. Mounting Brackets:
   Uponor® PEX mounting
   www.uponor-usa.com

2.02 SPRINKLER HEADS

A. The TYCO RAPID RESPONSE Series LFII Residential Domed-Plate Concealed Pendent 4.9 K-Factor Sprinklers (TY2234) are decorative, fast response, frangible bulb sprinklers designed for use in residential occupancies such as homes, apartments, dormitories, and hotels. The Cover Plate/Retainer Assembly conceals the sprinkler operating components above the ceiling. The domed profile of the cover plate provides aesthetically appealing sprinkler design with lower flow rates than can be achieved by lower profile cover plates. The separable two-piece design of the Cover Plate and Support Cup Assemblies allows installation of the sprinklers and pressure testing of the fire protection system prior to the installation of the ceiling or application of a finish coating.

B. The Series LFII Residential Domed- Plate Concealed Pendent Sprinklers (TY2234) are shipped with a Disposable Protective Cap. The Protective Cap is temporarily removed for installation, and it must be replaced to protect the sprinkler while the ceiling is being installed or finished. The tip of the Protective Cap can also be used to mark the center of the ceiling hole into plaster board or ceiling tiles by gently pushing the ceiling product against the Protective Cap. When ceiling installation is complete, the Protective Cap must be removed and the Cover Plate Assembly installed. The Protective Cap must be removed to ensure proper performance of the sprinklers.

2.03 FIRE SPRINKLER PIPING

A. Uponor® PEX piping certified for use in Fire Protection systems.
   1. Cross-linked polyethylene (PEX) manufactured by the Silane method.
   2. Non-barrier type.
      a. Shall have a pressure and temperature rating of 160 PSI at 73°F, 100 PSI at 180°F and 80 PSI at 200°F.
      b. Tubing shall have a minimum of 6 months UV protection.
   3. Manufactured in accordance with ASTM F876 and ASTM F877 and tested for compliance by an independent third-party agency.

B. Fire-Rated Copper Piping with insulation meeting ASTM standards.

2.04 VALVES AND FITTINGS

A. Fittings shall be manufactured by Uponor® PEX, identified by the letters “Q” or “Z” and Manufactured in accordance with ASTM F1807 or ASTM F2159 and/or comply with ASTM F877 system standard as identified on the fitting.

B. Valves shall be of the plastic or metal type, meeting the requirements of ASTM F877, identified as such with the appropriate mark on the product.

2.05 MOUNTING BRACKETS

A. Mounting brackets provided by Uponor® PEX, in compliance with ASTM requirements.

PART 3 – EXECUTION

3.01 INSTALLATION

A. All Uponor® PEX products provided in this section should be installed to manufacturer's specifications and to IRC and NFPA code requirements.

END OF SECTION

SECTION 21 24 16
DRY-CHEMICAL FIRE-EXTINGUISHER EQUIPMENT

PART 1 – GENERAL

1.01 SUMMARY

A. Section Includes
   1. Dry Powder Fire Extinguisher.

1.02 REFERENCES

A. Reference Standards
   1. IRC – International Residential Code.
   2. NFPA – National Fire Protection Association.
   3. UL – Underwriters Laboratories Inc.

1.03 SUBMITTALS

A. Product Data
   1. Submit product sheets and specifications for Fire Extinguisher.

1.04 QUALITY ASSURANCE

A. Certificates
   1. UL certification.
   2. Compliance with IRC Section P2904 or NFPA 13D.

PART 2 – PRODUCTS

2.01 MANUFACTURERS

A. First Alert® (or other manufacturer with similar product meeting all codes and requirements).

2.02 FIRE EXTINGUISHERS

A. (2 ct) First Alert® Model FE3A40GR Rechargeable Heavy Duty Dry Powder Fire Extinguishers.
   1. For use in case of controlled fire where one could safely use to extinguish.

PART 3 – EXECUTION

3.01 INSTALLATION

A. To be installed in locations in house where required by IRC and NFPA.

END OF SECTION

SECTION 21 31 13
ELECTRIC-DRIVE, CENTRIFUGAL FIRE PUMPS

PART 1 – GENERAL

1.01 SUMMARY

A. Section Includes
1. Electric-Drive, Centrifugal Fire Pump.
2. Diaphragm Pressure Tank.

B. Related Requirements
1. Section 21 13 00: Fire-Suppression Sprinkler Systems.
2. Section 21 41 23: Ground Suction Storage Tanks for Fire-Suppression Water.

1.02 REFERENCES

A. Reference Standards
1. IRC – International Residential Code.
2. NFPA – National Fire Protection Association.
3. UL – Underwriters Laboratories Inc.
4. ISO – International Standards Organization.

1.03 SUBMITTALS

A. Product Data
1. Submit product sheets and specifications for Fire Pump.

1.04 QUALITY ASSURANCE

A. Certificates
1. UL certification.
2. Compliance with IRC Section P2904 or NFPA 13D.

1.05 WARRANTY

A. Manufacturer's Warranty
1. Products manufactured by GRUNDFOS® PUMPS CORPORATION (Grundfos®) are warranted to the original user only to be free of defects in material and workmanship for a period of 24 months from date of installation, but not more than 30 months from date of manufacture. Grundfos® liability under this

warranty shall be limited to repairing or replacing at Grundfos® option, without charge, F.O.B. Grundfos® factory or authorized service station, any product of Grundfos® manufacture. Grundfos® will not be liable for any costs of removal, installation, transportation, or any other charges which may arise in connection with a warranty claim. Products which are sold but not manufactured by Grundfos are subject to the warranty provided by the manufacturer of said products and not by Grundfos® warranty. Grundfos® will not be liable for damage or wear to products caused by abnormal operating conditions, accident, abuse, misuse, unauthorized alteration or repair, or if the product was not installed in accordance with Grundfos® printed installation and operating instructions.

2. The warranty period shall be a non-prorated period of 24 months from date of installation, not to exceed 30 months from date of manufacture. Warranty shall cover pump, motor and add-on modules as complete unit.

PART 2 – PRODUCTS

2.01 MANUFACTURERS

A. Grundfos® (or other manufacturer with similar product meeting all codes and requirements). www.grundfos.com

B. Grundfos® (or other manufacturer with similar product meeting all codes and requirements). www.grundfos.com

2.02 ELECTRIC-DRIVE, CENTRIFUGAL FIRE PUMP

A. Grundfos® CR 5-8 Centrifugal Pump with standard cast iron and 304 stainless steel construction.
   1. For use with Fire-Suppression System to regulate and provide water pressure to Fire Sprinkler Heads.
   2. The pumps shall have the following features:
      a. The pump housing shall have a stainless steel neck ring to minimize recirculation and increase pump efficiency.
      b. The impellers shall be laser welded stainless to obtain maximum efficiency. Composite material shall not be acceptable. The impellers shall be secured to the shaft with a neck ring and a nut.
      c. The suction and discharge flanges shall be tapped and drilled to allow gauge installation on the pump.
      d. The pumps shall have radial tungsten carbide sleeve bearings for extended life. Metal impregnated carbon radial bearings shall not be acceptable.
      e. Pump Construction:

1) Pump housing	Cast Iron
2) Impellers, rotor can, rotor cladding	304 Stainless Steel
3) Shaft	316 Stainless Steel
4) Bearings	Tungsten Carbide
5) Axial thrust bearing	Carbon MY106
6) Shaft journals/ inner bearings	Silicon Carbide

7)	O-rings	EPDM
8)	Bearing plate	304 Stainless Steel

2.03 DIAPHRAGM PRESSURE TANK

A. Grundfos® or other, Diaphragm Pressure Tank.
   1. For use with the Fire Pump to build up and store needed pressure for fire suppression system to work properly.

PART 3 - EXECUTION

3.01 INSTALLATION

A. The pump shaft shall be installed horizontally or vertically per manufacturer's recommendations. The system shall be vented out from a higher location form the pump. The required inlet pressure by the pump shall be available at the pump inlet.

B. Pump location: The pump should be located in a dry, well-ventilated area which is not subject to freezing or extreme variation in temperature. Care must be taken to ensure the pump is mounted at least 6 inches (150 mm) clear of any obstruction or hot surfaces. The motor requires an adequate air supply to prevent overheating and adequate vertical space to remove the motor for repair. For open systems requiring suction lift the pump should be located as close to the water source as possible to reduce piping losses.

C. Foundation: Concrete or similar foundation material should be used to provide a secure, stable mounting base for the pump. See table of bolt hole center line dimensions for the various pump types. Secure the pump to the foundation using all four bolts and shim pump base to assure the pump is vertical and all four pads on the base are properly supported (uneven surfaces can result in pump base breakage when mounting bolts are tightened). The pump can be installed vertically or horizontally. Ensure that an adequate supply of cool air reaches the motor cooling fan. The motor must never fall below the horizontal plane. Arrows on the pump base show the direction of flow of liquid through the pump. To minimize possible noise from the pump, it is advisable to fit expansion joints on either side of the pump and anti-vibration mountings between the foundation and the pump.

   Note: Care should be taken to ensure that the vent plug is located in the uppermost position. Isolating valves should be fitted either side of the pump to avoid draining the system if the pump needs to be cleaned, repaired or replaced.

3.02 TESTING

A. The pumps shall be factory performance and hydrostatic tested as a complete unit prior to shipment. The testing shall be done in accordance with ISO 9906 Annex A. No test certificate is required.

END OF SECTION

SECTION 21 41 23
GROUND SUCTION STORAGE TANKS FOR FIRE-SUPPRESSION WATER

PART 1 – GENERAL

1.01 SUMMARY

A. Section Includes
1. 300 Gallon Fire-Suppression Water Storage Tank.

B. Related Requirements
1. Section 21 13 00 Fire-Suppression Sprinkler Systems.
2. Section 21 31 13 Electric-Drive, Centrifugal Fire Pumps.

1.02 REFERENCES

A. Reference Standards
1. IRC – International Residential Code.
2. NFPA – National Fire Protection Association.
3. UL – Underwriters Laboratories Inc.

1.03 SUBMITTALS

A. Product Data
1. Submit product sheets and specifications for Fire-Suppression Water Storage Tank.

1.04 QUALITY ASSURANCE

A. Certificates
1. UL certification.
2. Compliance with IRC Section P2904 or NFPA 13D.

PART 2 – PRODUCTS

2.01 MANUFACTURERS

A. Go To Tanks (or other manufacturer with similar product meeting all codes and requirements). www.gototanks.com

2.02 PLASTIC STORAGE TANK

A. Go To Tanks 300 Gallon Rectangular Utility Tank, Model 300RT-CRM.

1. For use with Fire-Suppression system to store Fire-Suppression water.

PART 3 – EXECUTION

3.01 INSTALLATION

A. To be installed on 3-1/2" stands to distribute weight evenly over ground surface.

END OF SECTION

DIVISION 22 PLUMBING

SECTION 22 11 16
DOMESTIC WATER PIPING

PART 1 – GENERAL

1.01 SUMMARY

A. Section Includes
1. Hot and Cold Water Piping.
2. Valves and Fittings.
3. Mounting brackets.

B. Related Requirements
1. Section 22 11 23.26 Close-Coupled, Horizontally Mounted, In-Line Centrifugal Domestic-Water Pumps.
2. Section 22 12 19 Facility Ground-Mounted, Potable-Water Storage Tanks.

1.02 REFERENCES

A. Reference Standards
1. IRC – International Residential Code.
2. IPC – International Plumbing Code.
3. UL – Underwriters Laboratories Inc.
4. UPC – Uniform Plumbing Code.
5. ASTM – American Society for Testing and Materials.

1.03 SUBMITTALS

A. Product Data
1. Submit product sheets and specifications for all products included in section.

B. Shop Drawings
1. Submit shop drawings of Domestic Water Supply System.

1.04 QUALITY ASSURANCE

A. Certificates
1. UL certification.
2. Compliance with IRC, IPC, and UPC.

1.05 WARRANTY

A. Manufacturer's Warranty
   1. Hot and Cold Water Piping and Accessories: Shall cover the repair or replacement of properly installed tubing and fittings proven defective as well as incidental damages. Warranty period for PEX tubing and subsequent system shall be 25 year non-prorated warranty against failure due to defect in material or workmanship, beginning with the date of installation. It is the installer's responsibility to avoid mixing fittings manufactured by others as it will reduce the owner's warranty.

PART 2 – PRODUCTS

2.01 MANUFACTURERS

A. Hot and Cold Water Piping:
   Uponor® PEX piping
   www.uponor-usa.com

B. Valves and Fittings:
   Uponor® PEX valves and fittings
   www.uponor-usa.com

C. Mounting Brackets:
   Uponor® PEX mounting
   www.uponor-usa.com

2.02 HOT AND COLD WATER PIPING

A. Uponor® PEX piping certified for use in Fire Protection systems
   1. Cross-linked polyethylene (PEX) manufactured by the Silane method.
   2. Non-barrier type.
      a. Shall have a pressure and temperature rating of 160 PSI at 73°F, 100 PSI at 180°F and 80 PSI at 200°F.
      b. Tubing shall have a minimum of 6 months UV protection.
   3. Manufactured in accordance with ASTM F876 and ASTM F877 and tested for compliance by an independent third-party agency.

2.03 VALVES AND FITTINGS

A. Fittings shall be manufactured by Uponor® PEX, identified by the letters "Q" or "Z" and Manufactured in accordance with ASTM F1807 or ASTM F2159 and/or comply with ASTM F877 system standard as identified on the fitting.

B. Valves shall be of the plastic or metal type, meeting the requirements of ASTM F877, identified as such with the appropriate mark on the product.

2.04 MOUNTING BRACKETS

A. Mounting brackets provided by Uponor® PEX, in compliance with ASTM requirements.

PART 3 – EXECUTION

3.01 INSTALLATION

A. To be installed per Manufacturer's requirements and IRC, IPC, UPC compliance.

END OF SECTION

SECTION 22 11 23.26

CLOSE-COUPLED, HORIZONTALLY MOUNTED, IN-LINE CENTRIFUGAL DOMESTIC-WATER PUMPS

PART 1 – GENERAL

1.01 SUMMARY

A. Section Includes
1. Domestic Fresh Water Pump.

B. Related Requirements
1. Section 22 11 16: Domestic Water Piping.
2. Section 22 12 19: Facility Ground-Mounted, Potable-Water Storage Tanks.

1.02 REFERENCES

A. Abbreviations and Acronyms
1. POM: Polyoximetylen
2. NR-rubber: Natural Rubber
3. PPO: Polyphenylene Oxides
4. NBR-rubber: Nitrile-Butadiene Rubber

B. Reference Standards
1. IRC – International Residential Code.
2. IPC – International Plumbing Code.
3. UL – Underwriters Laboratories Inc.
4. UPC – Uniform Plumbing Code.
5. ASTM – American Society for Testing and Materials.
6. ISO – International Standards Organization.

1.03 SUBMITTALS

A. Product Data
1. Submit product sheets and specifications for Domestic Fresh Water Pump.

1.04 QUALITY ASSURANCE

A. Certificates
1. UL certification.
2. Compliance with IRC, IPC, and UPC.

1.05 WARRANTY

A. Manufacturer's Warranty
   1. Products manufactured by GRUNDFOS® PUMPS CORPORATION (Grundfos®) are warranted to the original user only to be free of defects in material and workmanship for a period of 24 months from date of installation, but not more than 30 months from date of manufacture. Grundfos® liability under this warranty shall be limited to repairing or replacing at Grundfos® option, without charge, F.O.B. Grundfos® factory or authorized service station, any product of Grundfos® manufacture. Grundfos® will not be liable for any costs of removal, installation, transportation, or any other charges which may arise in connection with a warranty claim. Products which are sold but not manufactured by Grundfos are subject to the warranty provided by the manufacturer of said products and not by Grundfos® warranty. Grundfos® will not be liable for damage or wear to products caused by abnormal operating conditions, accident, abuse, misuse, unauthorized alteration or repair, or if the product was not installed in accordance with Grundfos® printed installation and operating instructions.
   2. The warranty period shall be a non-prorated period of 24 months from date of installation, not to exceed 30 months from date of manufacture. Warranty shall cover pump, motor and add-on modules as complete unit.

PART 2 – PRODUCTS

2.01 MANUFACTURERS

A. Grundfos® (or other manufacturer with similar product meeting all codes and requirements). www.grundfos.com

2.02 DOMESTIC FRESH WATER PUMP

A. Grundfos® MQ 3-45 Self-Priming Multistage Centrifugal Pump.
   1. For use with Domestic Water Supply System to regulate and provide water pressure to fixtures.
   2. The MQ is a complete, all-in-one unit, incorporating pump, motor, diaphragm tank, pressure and flow sensor, controller and check valve. The controller ensures that the pump starts automatically when water is consumed and stops automatically when the consumption ceases. In addition, the controller protects the pump in case of faults.

B. Material Specifications as follows:

Pos.	Components	Material
2	Support flange	PP+30% Glass Fiber HB (f1)
4	Chamber	PPO+20% Glass Fiber
7	Drain and priming plug	PPO+20% Glass Fiber
10	Self-priming valve	PP+30% Glass Fiber
14	Self priming part	PPO+20% Glass Fiber
16	Pump sleeve	Stainless steel, DIN W.-Nr. 1.4301, AISI 304
42	Tank cover	PP+30% Glass Fiber HB (f1)
49	Impeller	PPO +20% Glass Fiber-PTFE
51	Motor cover	PP+30% Glass Fiber HB (f1)
65	Non-return valve	POM +25% Glass Fiber
92	Clamp	Stainless steel, DIN W.-Nr 1.4301, AISI 304
100a	Discharge port	PPO+20% Glass Fiber

Pos.	Components	Material
101	Suction port	PPO+20% Glass Fiber
103 104	Shaft seal: Stationary and rotating part	Carbon/ceramics/NBR rubber
149	Insulation disc	PA 5VA (Polyammide)
150	Shaft	Stainless steel, DIN W.-Nr 1.4005, AISI 416
	Motor sleeve	Stainless steel, DIN W.-Nr 1.4301, AISI 304
164	Terminal box cover	PP+30% Glass Fiber 5VA (f1)
174a	Pressure switch	POM+25% Glass Fiber / SIL Rubber (Silicone Rubber)
	Pressure switch membrane	SIL Rubber - Silicone Rubber
180	Motor body	PP+30% Glass Fiber 5VA (f1)
184	Flow sensor	POM+25% Glass Fiber
	O-rings	NBR-rubber

PART 3 - EXECUTION

3.01 INSTALLATION

A. The pump shaft shall be installed horizontally per manufacturer's recommendations. The terminal box shall be located as per manufacturer's recommendations. The system shall be vented out from a higher location form the pump. The required inlet pressure by the pump shall be available at the pump inlet.

B. Pump location: The pump should be located in a dry, well-ventilated area which is not subject to freezing or extreme variation in temperature. Due to its compact design, the pump does not take up much space and is easy to install. No space around the pump is required.

C. Self-priming pump: As it is self-priming, the MQ is able to pump water from a level below the pump. Provided it is filled with water, the pump is able to lift water from a depth of 26 ft (8 m) in less than 5 minutes. This facilitates installation and startup of the pump and provides more reliable water supply in installations where there is a risk of dry running and leakages in suction hose or pipes.

3.02 TESTING

A. The pumps shall be factory performance and hydrostatic tested as a complete unit prior to shipment. The testing shall be done in accordance with ISO 9906 Annex A. No test certificate is required

END OF SECTION

SECTION 22 12 19

FACILITY GROUND-MOUNTED, POTABLE-WATER STORAGE TANKS

PART 1 – GENERAL

1.01 SUMMARY

A. Section Includes
1. 500 Gallon Potable-Water Storage Tank.

B. Related Requirements
1. Section 22 11 16 Domestic Water Piping.
2. Section 22 11 23.26 Close-Coupled, Horizontally Mounted, In-Line Centrifugal Domestic-Water Pumps.

1.02 REFERENCES

A. Reference Standards
1. IRC – International Residential Code.
2. IPC – International Plumbing Code.
3. UL – Underwriters Laboratories Inc.
4. UPC – Uniform Plumbing Code.

1.03 SUBMITTALS

A. Product Data
1. Submit product sheets and specifications for Potable-Water Storage Tank.

1.04 QUALITY ASSURANCE

A. Certificates
1. UL certification.
2. Compliance with IRC, IPC, and UPC.

PART 2 – PRODUCTS

2.01 MANUFACTURERS

A. Go To Tanks (or other manufacturer with similar product meeting all codes and requirements). www.gototanks.com

2.02 POTABLE-WATER STORAGE TANK

A. Go To Tanks 500 Gallon Rectangular Utility Tank, Model 500RT.
   1. For use with Domestic Water Supply System to store fresh water.

PART 3 – EXECUTION

3.01 INSTALLATION

A. To be installed on 3-1/2" stands to distribute weight evenly over ground surface.

END OF SECTION

SECTION 22 13 16
SANITARY WASTE AND VENT PIPING

PART 1 – GENERAL

1.01 SUMMARY

A. Section Includes
1. Sanitary Piping.
2. Vent Piping.
3. Valves and Fittings.
4. Mounting Brackets.

B. Related Requirements
1. Section 22 13 19.36 Air-Admittance Valves.
2. Section 22 13 53 Facility Septic Tanks.

1.02 REFERENCES

A. Reference Standards
1. IRC – International Residential Code.
2. IPC – International Plumbing Code.
3. UL – Underwriters Laboratories Inc.
4. UPC – Uniform Plumbing Code.
5. ASTM – American Society for Testing and Materials.

1.03 SUBMITTALS

A. Product Data
1. Submit product sheets and specifications for all products included in section.

B. Shop Drawings
1. Submit shop drawings of Sanitary and Venting System.

1.04 QUALITY ASSURANCE

A. Certificates
1. UL certification.
2. Compliance with IRC, IPC, and UPC.

PART 2 – PRODUCTS

2.01 MANUFACTURERS

A. Any providers with products meeting builder's needs and ASTM standards, as well as compliant with IRC, IPC, and UPC.

2.02 SANITARY PIPING

A. PVC piping meeting ASTM standard.
   1. For use with Sanitary and Venting System to drain water from fixtures into Sanitary-Water Storage Tank.

2.03 VENT PIPING

A. PVC piping meeting ASTM standard.
   1. For use with Sanitary and Venting System to allow air to escape through the roof of the building and prevent drainage problems.

2.04 VALVES AND FITTINGS

A. PVC fittings and valves meeting ASTM standard.
   1. For use with Sanitary and Venting System to connect piping and adjust flow conditions.

2.05 MOUNTING BRACKETS

A. PVC mounting brackets meeting ASTM standard.
   1. For use with Sanitary and Venting System to hang piping.

PART 3 – EXECUTION

3.01 INSTALLATION

A. To be installed per requirements of IRC, IPC, and UPC.

END OF SECTION

SECTION 22 13 19.36
AIR-ADMITTANCE VALVES

PART 1 – GENERAL

1.01 SUMMARY

A. Section Includes
   1. Air-Admittance Valves.

B. Related Requirements
   1. Section 22 13 16: Sanitary Waste and Vent Piping.
   2. Section 22 13 53: Facility Septic Tanks.

1.02 REFERENCES

A. Reference Standards
   1. IRC – International Residential Code.
   2. IPC – International Plumbing Code.
   3. UL – Underwriters Laboratories Inc.
   4. UPC – Uniform Plumbing Code.

1.03 SUBMITTALS

A. Product Data
   1. Submit product sheets and specifications for Air-Admittance Valves.

1.04 QUALITY ASSURANCE

A. Certificates
   1. UL certification.
   2. Compliance with IRC Section P3114, IPC, and UPC.

PART 2 – PRODUCTS

2.01 MANUFACTURERS

A. Any providers with products meeting builder's needs and ASTM standards, as well as compliant with IRC, IPC, and UPC.

2.02 AIR-ADMITTANCE VALVES

A. Individual Air admittance valves (AAVs).
   1. AAV's are pressure-activated, one-way mechanical vents. For use with Sanitary and Venting System provide venting to low flow fixtures to eliminate the need for conventional pipe venting and roof penetrations for these fixtures. Regular Venting still required for high flow fixtures.

PART 3 – EXECUTION

3.01 INSTALLATION

A. To be installed per requirements of IRC, IPC, and UPC.

END OF SECTION

SECTION 22 13 29.16
SUBMERSIBLE SEWERAGE PUMPS

PART 1 – GENERAL

1.01 SUMMARY

A. Section Includes
1. Submersible Sanitary Water Pump.

B. Related Requirements
1. Section 22 12 19: Facility Ground-Mounted, Potable-Water Storage Tanks.
2. Section 22 13 53: Facility Septic Tanks.
3. Section 21 41 23: Ground Suction Storage Tanks for Fire-Suppression Water
4. Section 23 71 13.23: Pressurized-Water Thermal Storage Tanks.

1.02 REFERENCES

A. Reference Standards
1. IRC – International Residential Code.
2. IPC – International Plumbing Code.
3. UL – Underwriters Laboratories Inc.
4. UPC – Uniform Plumbing Code.

1.03 SUBMITTALS

A. Product Data
1. Submit product sheets and specifications for Submersible Sanitary Water Pump.

1.04 QUALITY ASSURANCE

A. Certificates
1. UL certification.
2. Compliance with IRC, IPC, and UPC.

1.05 WARRANTY

A. Manufacturer's Warranty
1. Products manufactured by GRUNDFOS® PUMPS CORPORATION (Grundfos®) are warranted to the original user only to be free of defects in material and workmanship for a period of 24 months from date of installation, but not more than 30 months from date of manufacture. Grundfos® liability under this warranty shall be limited to repairing or replacing at Grundfos® option, without charge, F.O.B. Grundfos® factory or authorized service station, any product of Grundfos® manufacture. Grundfos® will

not be liable for any costs of removal, installation, transportation, or any other charges which may arise in connection with a warranty claim. Products which are sold but not manufactured by Grundfos are subject to the warranty provided by the manufacturer of said products and not by Grundfos® warranty. Grundfos® will not be liable for damage or wear to products caused by abnormal operating conditions, accident, abuse, misuse, unauthorized alteration or repair, or if the product was not installed in accordance with Grundfos® printed installation and operating instructions. The warranty period shall be a non-prorated period of 24 months from date of installation, not to exceed 30 months from date of manufacture. Warranty shall cover pump, motor and add-on modules as complete unit.

PART 2 – PRODUCTS

2.01 MANUFACTURERS

A. Grundfos® (or other manufacturer with similar product meeting all codes and requirements). www.grundfos.com

2.02 SUBMERSIBLE SANITARY WATER PUMP

A. Grundfos® Unilift CC 9-MI (96781221) Submersible Wastewater Pump.
   1. For use in distributing water from Fresh and Sanitary Water tanks, after initial water delivery, to Thermal Storage Tank and Fire Suppression Tank.
   2. For use in draining Thermal Storage Tank, and Fire Suppression Tank back into Fresh and Sanitary Water tanks for water removal.

PART 3 – EXECUTION

3.01 INSTALLATION

A. Mobile Submersible Pump to be used for water distribution and drainage, and stored away in between needs.

END OF SECTION

SECTION 22 13 53
FACILITY SEPTIC TANKS

PART 1 – GENERAL

1.01 SUMMARY

A. Section Includes
   1. 500 Gallon Sanitary-Water Storage Tank.

B. Related Requirements
   1. Section 22 13 16: Sanitary Waste and Vent Piping.
   2. Section 22 13 19.36: Air-Admittance Valves.

1.02 REFERENCES

A. Reference Standards
   1. IRC – International Residential Code.
   2. IPC – International Plumbing Code.
   3. UL – Underwriters Laboratories Inc.
   4. UPC – Uniform Plumbing Code.

1.03 SUBMITTALS

A. Product Data
   1. Submit product sheets and specifications for Sanitary-Water Storage Tank.

1.04 QUALITY ASSURANCE

A. Certificates
   1. UL certification.
   2. Compliance with IRC, IPC, and UPC.

PART 2 – PRODUCTS

2.01 MANUFACTURERS

A. Go To Tanks (or other manufacturer with similar product meeting all codes and requirements). www.gototanks.com

2.02 SANITARY -WATER STORAGE TANK

A. Go To Tanks 500 Gallon Rectangular Utility Tank, Model 500RT.
   1. For use with Sanitary and Venting System to store grey/used water.

PART 3 – EXECUTION

3.01 INSTALLATION

A. To be installed on 3-1/2" stands to distribute weight evenly over ground surface.

END OF SECTION

SECTION 22 33 30.23
RESIDENTIAL, COLLECTOR-TO-TANK, SOLAR-ELECTRIC DOMESTIC WATER HEATERS

PART 1 – GENERAL

1.01 SUMMARY

A. Section Includes
1. Solar Hot Water Storage Tank with Backup Heating.
2. Solar Hot Water Storage Tank.
3. Solar Hot Water Circulating Pump.
4. Solar Hot Water Piping, Fittings, and Valves.
5. Solar Hot Water Controller.

B. Related Requirements
1. Section 22 11 16: Domestic Water Piping.
2. Section 23 56 13.13: Heating Solar Flat-Plate Collectors.

1.02 REFERENCES

A. Reference Standards
1. IRC – International Residential Code.
2. IPC – International Plumbing Code.
3. UL – Underwriters Laboratories Inc.
4. UPC – Uniform Plumbing Code.
5. ASTM – American Society for Testing and Materials.

1.03 SUBMITTALS

A. Product Data
1. Submit product sheets and specifications for all products included in section.

B. Shop Drawings
1. Submit shop drawings of Solar Hot Water System.

1.04 QUALITY ASSURANCE

A. Certificates
1. UL certification.
2. Compliance with IRC, IPC, and UPC.

1.05 WARRANTY

A. Manufacturer's Warranty

1. Residential Low Boy: Bradford White Corporation warrants that for 6 or 10 years from date of installation, or three months after the date of manufacture, both the glass-lined tank and components parts for leakage or other malfunction caused by defects in materials and/or workmanship. This limited warranty extends to the first buyer and to any subsequent owner(s) provided the water heater remains installed at its original place of installation in USA, CANADA, or Puerto Rico. If within warranty period, any leakage or malfunction due to defects in material and/or workmanship will be repaired or replaced at the discretion of Bradford White. To obtain a replacement water tank, the rating plate must be forwarded from the defective unit to Bradford White. If government regulations require the replacement water heater to have features not found in the defective water heater, the owner will be required to pay the difference in price represented by those government required features. If within warranty period, a faulty part can be replaced, (or repaired at Bradford White discretion), provided the defective part is forwarded to Bradford White. Likewise, if government regulations require the replacement part to have features not found in the defective part, the owner will be required to pay the difference in price represented by those government required features. Limited warranty does not cover leakage or other malfunction caused by excessive use, defective installation, adverse local conditions, misuse, maintenance contrary to written instruction furnished with unit, production of noise, odors, or water impurities, property damage, costs associated with replacement or repair of unit. Bradford White reserves the right to verify any claims of defect by inspection.
2. Products manufactured by GRUNDFOS® PUMPS CORPORATION (Grundfos®) are warranted to the original user only to be free of defects in material and workmanship for a period of 24 months from date of installation, but not more than 30 months from date of manufacture. Grundfos® liability under this warranty shall be limited to repairing or replacing at Grundfos® option, without charge, F.O.B. Grundfos® factory or authorized service station, any product of Grundfos® manufacture. Grundfos® will not be liable for any costs of removal, installation, transportation, or any other charges which may arise in connection with a warranty claim. Products which are sold but not manufactured by Grundfos are subject to the warranty provided by the manufacturer of said products and not by Grundfos® warranty. Grundfos® will not be liable for damage or wear to products caused by abnormal operating conditions, accident, abuse, misuse, unauthorized alteration or repair, or if the product was not installed in accordance with Grundfos® printed installation and operating instructions. The warranty period shall be a non-prorated period of 24 months from date of installation, not to exceed 30 months from date of manufacture. Warranty shall cover pump, motor and add-on modules as complete unit.
3. The Heliodyne® Warranty states that all Heliodyne® controllers will be under warranty for three years from the date of installation. Under warranty the product will be free from defects in material and workmanship, malfunctions and failure to perform, under normal use, service and maintenance, as long as the produce was installed in accordance with the Heliodyne® installation instructions. This warranty covers the first retail buyer as well as subsequent owners. (http://www.heliodyne.com/industry_professionals/downloads/HeliodyneWarranty.pdf)

PART 2 – PRODUCTS

2.01 MANUFACTURERS

A. Solar Hot Water Storage Tank with Backup Heating:
Bradford White® Corporation
www.bradfordwhite.com

B. Solar Hot Water Storage Tank:
Bradford White® Corporation
www.bradfordwhite.com

C. Solar Hot Water Circulating Pump:
Grundfos®
www.grundfos.com

D. Solar Hot Water Piping, Fittings, and Valves: Any provider with code compliant products.

E. Solar Hot Water Controller:
Heliodyne® Inc. Delta T Controllers
www.heliodyne.com

2.02 SOLAR HOT WATER STORAGE TANK WITH BACKUP HEATING

A. 40 Gallon Residential Lowboy Energy Saver Electric Water Heater, Model M-1-40L6DS**.
1. For use with Solar Hot Water System to store hot water and provide backup heating when solar thermal gains are not enough.

2.03 SOLAR HOT WATER STORAGE TANK

A. 40 Gallon Residential Lowboy Energy Saver Electric Water Heater, Model M-1-40L6DS**.
1. For use with Solar Hot Water System to store hot water. Unit will not have heating element installed.

2.04 SOLAR HOT WATER CIRCULATING PUMP

A. Grunfos® UP15-18 BUC 7 Circulating Pump.
1. For use with Solar Hot Water System to circulate water through Solar Thermal Collector Panels and into storage tanks.

2.05 SOLAR HOT WATER PIPING, FITTINGS, AND VALVES

A. Copper piping with insulation per ASTM standards and IRC.

B. Copper pipe fittings meeting ASTM standards and IRC.

C. Copper pipe valves meeting ASTM standards and IRC.

1.06 SOLAR HOT WATER CONTROLLER

A. Heliodyne® Delta-T Pro Controller Unit – with Wi-Fi.
   1. For use with the Solar Hot Water System to monitor temperature differences between panel and storage tank and to control the operation of the circulation pump as well as the back up heating tank.
   2. Pro controller in Wi-Fi connection format. This version utilizes a wireless Wi-Fi signal to connect to the internet instead of an Ethernet cable. 5 program configurations available for use in OL DHW, CL DHW, Pool, Space and Commercial systems. Requires a minimum of two SAS-10 (10,000 Ohm @ 77°F) thermistor sensors.

PART 3 – EXECUTION

3.01 INSTALLATION

A. To be installed per Manufacturer's requirements and IRC, IPC, UPC compliance.

END OF SECTION

SECTION 22 41 00
RESIDENTIAL PLUMBING FIXTURES

PART 1 – GENERAL

1.01 SUMMARY

A. Section includes
1. Kitchen Sink, Faucet, and Strainer.
2. Bathroom Sink, Faucet, and Drain.
3. Handshower Kit, Drain, Stack Valve, and Stack Valve Trim.
4. Water Closet.

B. Related Requirements
1. Section 22 11 16: Domestic Water Piping.
2. Section 22 13 16: Sanitary Waste and Vent Piping.

1.02 REFERENCES

A. Reference Standards
1. IRC – International Residential Code.
2. IPC – International Plumbing Code.
3. UL – Underwriters Laboratories Inc.
4. UPC – Uniform Plumbing Code.

1.03 SUBMITTALS

A. Product Data
1. Submit product sheets and specifications for all products included in section.

B. Shop Drawings
1. Submit shop drawings of detail connections of plumbing to fixtures.

1.04 QUALITY ASSURANCE

A. Certificates
1. UL certification.
2. Compliance with IRC, IPC, and UPC.

PART 2 – PRODUCTS

2.01 MANUFACTURERS

A. Kohler® Kitchen & Bath
www.us.kohler.com

2.02 KITCHEN SINK, FAUCET, AND STRAINER

A. Kohler® K7507 Faucet:
http://www.us.kohler.com/onlinecatalog/detail.jsp?from=thumb&frm=null&module=Kitchen+Sink+Faucets&item=15108502&prod_num=7507&section=1&category=4&resultPage=0

B. Kohler® K3331 Sink:
http://www.us.kohler.com/onlinecatalog/detail.jsp?from=thumb&frm=null&module=Kitchen+Sinks&item=242302&prod_num=3331&section=1&category=5&resultPage=0-1315060530

C. Kohler® K8801 Duo Sink Strainer:
http://www.us.kohler.com/onlinecatalog/detail.jsp?item=468302&section=1&category=7&subcategory=41&retail=false

2.03 BATHROOM SINK, FAUCET, AND DRAIN

A. Kohler® k7507 Faucet:
http://www.us.kohler.com/onlinecatalog/detail.jsp?from=thumb&frm=null&module=Kitchen+Sink+Faucets&item=15108502&prod_num=7507&section=1&category=4&resultPage=0

B. Kohler® Vox Vessel Lavatory:
http://www.us.kohler.com/onlinecatalog/detail.jsp?from=thumb&frm=&module=Lavatories&item=15184302&prod_num=14800&section=2&category=16&resultPage=0-1420926875

C. Kohler® K-7124-A-cp Pop-up :
http://www.us.kohler.com/onlinecatalog/detail.jsp?item=11987102&retail=false

2.04 HANDSHOWER KIT, DRAIN, STACK VALVE, AND STACK VALVE TRIM

A. Kohler® K8487 Hand shower:
http://www.us.kohler.com/onlinecatalog/detail.jsp?from=thumb&frm=&module=Handshower+Accessories&item=13645102&prod_num=8487&section=2&category=12&resultPage=0-1846098269

B. Kohler® K-9132 Drain:
http://www.us.kohler.com/onlinecatalog/detail.jsp?item=473002&retail=false

C. Kohler® K-T14489-4-cp Trim:
http://search.us.kohler.com/?q=Purist%AE+stacked+valve+trim&x=6&y=7

D. Kohler® Stack Valve:

http://search.us.kohler.com/?q=MasterShower%AE+thermostatic+valve+with+integrated+volume+control+&x=21&y=6

2.05 WATER CLOSET

A. Kohler® K-3492-0 Toilet:
http://search.us.kohler.com/?q=hatbox

PART 3 – EXECUTION

3.01 INSTALLATION

A. To be installed per manufacturer's requirements and IRC, IPC, UPC compliance.

END OF SECTION

DIVISION 23 HEATING, VENTILATING, AND AIR-CONDITIONNIG (HVAC)

SECTION 23 09 23
DIRECT-DIGITAL CONTROL SYSTEM FOR HVAC

PART 1 – GENERAL

1.01 SUMMARY

A. Section Includes
1. HVAC Controller Unit.

B. Related Requirements
1. Section 23 21 23.13: In-Line Centrifugal Hydronic Pumps.
2. Section 23 30 00: HVAC Air Distribution.
3. Section 23 81 46: Water-Source Unitary Heat Pumps.
4. Section 23 71 13.23: Pressurized-Water Thermal Storage Tanks.

1.02 REFERENCES

A. Reference Standards
1. IRC – International Residential Code.
2. ASHRAE – American Society of Heating, Refrigerating and Air-Conditioning Engineers.
3. UL – Underwriters Laboratories Inc.
4. AHRI – Air-Conditioning, Heating and Refrigeration Institute.

1.03 SUBMITTALS

A. Product Data
1. Submit product sheets and specifications for HVAC Controller.

1.04 QUALITY ASSURANCE

A. Certificates
1. UL certification.
2. AHRI certification.
3. Compliance with IRC and ASHRAE standards.

PART 2 – PRODUCTS

2.01 MANUFACTURERS

A. Johnson Controls® (or other manufacturer with similar product meeting all codes and requirements). www.johnsoncontrols.com

2.02 HVAC CONTROLLERS

A. Johnson Controls® RJ Series Controls - Premier Microprocessor.
   1. For use with HVAC System to regulate Thermal Mass Pump and Heat Pump fan in order to achieve desired indoor air conditions.

PART 3 – EXECUTION

3.01 INSTALLATION

A. To be installed and tested to manufacturers requirements and IRC and ASHRAE standards.

END OF SECTION

SECTION 23 21 13.43
THERMAL MASS-LOOP HEAT-PUMP PIPING

PART 1 – GENERAL

1.01 SUMMARY

A. Section Includes
1. Thermal Mass-Loop Heat-Pump Piping.

B. Related Requirements
1. Section 23 21 23.13: In-Line Centrifugal Hydronic Pumps.
2. Section 23 30 00: HVAC Air Distribution.
3. Section 23 81 46: Water-Source Unitary Heat Pumps.
4. Section 23 71 13.23: Pressurized-Water Thermal Storage Tanks.

1.02 REFERENCES

A. Reference Standards
1. IRC – International Residential Code.
2. ASHRAE – American Society of Heating, Refrigerating and Air-Conditioning Engineers.
3. UL – Underwriters Laboratories Inc.
4. ASTM – American Society for Testing and Materials.

1.03 SUBMITTALS

A. Product Data
1. Submit product sheets and specifications for Thermal Mass-Loop Heat-Pump Piping.

1.04 QUALITY ASSURANCE

A. Certificates
1. UL certification.
2. Compliance with IRC and ASHRAE standards.

PART 2 – PRODUCTS

2.01 MANUFACTURERS

A. Any provider with products meeting system requirements and IRC.

2.02 THERMAL MASS-LOOP HEAT-PUMP PIPING

A. Copper Piping with insulation meeting ASTM standards and Heat-Pump Manufacturer's requirements.
   1. For use with HVAC System to transport Thermal Mass fluid to and from the Heat-Pump unit.

PART 3 – EXECUTION

3.01 INSTALLATION

A. To be installed and tested to Manufacturer's requirements and IRC and ASHRAE standards.

B. Thermal Mass Water Piping: Piping is usually designed as 'reverse return' to equalize flow paths through each unit. A short flexible pressure rated hose is used to make connection to the fixed building piping system. This hose is typically stainless steel braid and includes a swivel fitting on one end for easy removal and is flexible to help isolate the unit for quieter operation. Isolation valves for servicing, y-strainers for filtering and memory-stop flow valve or a balancing valve can be provided for consistent water flow through the unit. All unit source water connections are fittings that accept a male pipe thread (MPT). Insert the connectors by hand, and then tighten the fitting with a wrench to provide a leak proof joint. The open and closed loop piping system should include pressure/temperature ports for serviceability. The proper water flow must be provided to each unit whenever the unit operates. To assure proper flow, use pressure/temperature ports to determine the flow rate. These ports should be located at the supply and return water connections on the unit. The proper flow rate cannot be accurately set without measuring the water pressure drop through the refrigerant-to-water heat exchanger. Limit hose length to 10 feet per connection. Check carefully for water leaks.

END OF SECTION

SECTION 23 21 23.13
IN-LINE CENTRIFUGAL HYDRONIC PUMPS

PART 1 – GENERAL

1.01 SUMMARY

A. Section Includes
1. Thermal Mass Circulating Pump.

B. Related Requirements
1. Section 23 21 13.43: Thermal Mass-Loop Heat-Pump Piping.
2. Section 23 30 00: HVAC Air Distribution.
3. Section 23 81 46: Water-Source Unitary Heat Pumps.
4. Section 23 71 13.23: Pressurized-Water Thermal Storage Tanks.

1.02 REFERENCES

A. Reference Standards
1. IRC – International Residential Code.
2. ASHRAE – American Society of Heating, Refrigerating and Air-Conditioning Engineers.
3. UL – Underwriters Laboratories Inc.
4. ISO – International Standards Organization.

1.03 SUBMITTALS

A. Product Data
1. Submit product sheets and specifications for Thermal Mass Booster Pump.

1.04 QUALITY ASSURANCE

A. Certificates
1. UL certification.
2. Compliance with IRC and ASHRAE standards.

1.05 WARRANTY

A. Manufacturer's Warranty
1. Products manufactured by GRUNDFOS® PUMPS CORPORATION (Grundfos®) are warranted to the original user only to be free of defects in material and workmanship for a period of 24 months from date of installation, but not more than 30 months from date of manufacture. Grundfos® liability under this

warranty shall be limited to repairing or replacing at Grundfos® option, without charge, F.O.B. Grundfos® factory or authorized service station, any product of Grundfos® manufacture. Grundfos® will not be liable for any costs of removal, installation, transportation, or any other charges which may arise in connection with a warranty claim. Products which are sold but not manufactured by Grundfos are subject to the warranty provided by the manufacturer of said products and not by Grundfos® warranty. Grundfos® will not be liable for damage or wear to products caused by abnormal operating conditions, accident, abuse, misuse, unauthorized alteration or repair, or if the product was not installed in accordance with Grundfos® printed installation and operating instructions. The warranty period shall be a non-prorated period of 24 months from date of installation, not to exceed 30 months from date of manufacture. Warranty shall cover pump, motor and add-on modules as complete unit.

PART 2 – PRODUCTS

2.01 MANUFACTURERS

A. Grundfos® (or other manufacturer with similar product meeting all codes and requirements). www.grundfos.com

2.02 THERMAL MASS BOOSTER PUMP

A. Grundfos® UP15-18 BUC 7 Circulating Pump.
   1. For use with HVAC System to pump Thermal Mass fluid to and from the Heat-Pump unit.

PART 3 – EXECUTION

3.01 INSTALLATION

A. The pump shaft shall be installed horizontally per manufacturer's recommendations. The system shall be vented out from a higher location form the pump. The required inlet pressure by the pump shall be available at the pump inlet.

B. Pump location: The pump should be located in a dry, well-ventilated area which is not subject to freezing or extreme variation in temperature.

C. Pump Priming: Self-priming to 10 ft. when pump housing and suction housing are filled; must maintain 1.5 gpm flow to pump for proper seal and pump housing lubrication. If liquid temperature is above 60°F, pumps require inlet pressure of 10 psi.

D. Electronic Pump Protectors: An electronic pump protector can be used to monitor water flow and automatically shut down the motor when flow drops below 1.0 gpm; protect pumps against damage caused

by dry run or dead head conditions. The motor will turn back on to boost system pressure when flow goes back above that level.

3.02 TESTING

A. The pumps shall be factory performance and hydrostatic tested as a complete unit prior to shipment. The testing shall be done in accordance with ISO 9906 Annex A. No test certificate is required.

END OF SECTION

SECTION 23 30 00
HVAC AIR DISTRIBUTION

PART 1 – GENERAL

1.01 SUMMARY

A. Section Includes
1. Metal Ducts.
2. Volume-Control Dampers.
3. Backdraft Dampers.
4. Flexible Duct Collars.
5. Flexible Hose Ducts.
6. Floor Diffusers.
7. Duct Insulation Liners.
8. Bathroom Ventilation Fan.

B. Related Requirements
1. Section 23 21 13.43: Thermal Mass-Loop Heat-Pump Piping.
2. Section 23 21 23.13: In-Line Centrifugal Hydronic Pumps.
3. Section 23 81 46: Water-Source Unitary Heat Pumps.
4. Section 23 84 16: Dehumidifiers.
5. Section 23 71 13.23: Pressurized-Water Thermal Storage Tanks.

1.02 REFERENCES

A. Reference Standards
1. IRC – International Residential Code.
2. ASHRAE – American Society of Heating, Refrigerating and Air-Conditioning Engineers.
3. UL – Underwriters Laboratories Inc.
4. ASTM – American Society for Testing and Materials.

1.03 SUBMITTALS

A. Product Data
1. Submit product sheets and specifications for all products included in section.

B. Shop Drawings
1. Submit shop drawings of HVAC System Diagram.

1.04 QUALITY ASSURANCE

A. Certificates
   1. UL certification.
   2. Compliance with IRC and ASHRAE standards

PART 2 – PRODUCTS

2.01 MANUFACTURERS

A. Metal Ducts: To be manufactured by builder.

B. Volume-Control Dampers: Any provider meeting IRC and ASHRAE standards.

C. Backdraft Dampers: Any provider meeting IRC and ASHRAE standards.

D. Flexible Duct Collars: Any provider meeting IRC and ASHRAE standards.

E. Flexible Hose Ducts: Any provider meeting IRC and ASHRAE standards.

F. Floor Diffusers: Any provider meeting IRC and ASHRAE standards.

G. Duct Insulation Liners: Any provider meeting IRC and ASHRAE standards.

H. Bathroom Ventilation Fan:
   Panasonic®
   www.panasonic.com

2.02 METAL DUCTS

A. Ducts to be manufactured by builder to meet system requirements and IRC and ASHRAE standards.
   1. Ducts to be secured by mounting brackets approved for application.
   2. Ducts will be constructed of sheet metal meeting ASTM requirements.

2.03 VOLUME-CONTROL DAMPERS

A. Volume-Control Dampers will be installed into ducting for HVAC System balancing and adjustment.

2.04 BACKDRAFT DAMPERS

A. Backdraft Dampers to be installed in ducts to prevent flow of air in the wrong direction.

2.05 FLEXIBLE DUCT COLLARS

A. Flexible Duct Collars to be installed at supply and return duct connections to Heat-Pump in order to prevent noise and vibration.

2.06 FLEXIBLE HOSE DUCTS

A. Flexible Hose Ducts will be used in place of metal ducting when applicable.

2.07 FLOOR DIFFUSERS

A. Floor Diffusers will be installed for both supply and return venting into and out of conditioned spaces inside house.

2.08 DUCT INSULATION LINERS

A. Duct Insulation Liners will be used on both supply and return ducts with a minimum of 1 inch thickness, complying with IRC and ASHRAE standards. Duct liners are used to insulate and prevent heat transfer to conditioned air in ducts.

2.09 BATHROOM VENTILATION FAN

A. Panasonic® WhisperGreen-Lite™ Ventilation Fan.
   1. For use in Bathroom to provide ventilation.
   2. Ventilating fan shall be Low Noise ceiling mount type rated for continuous run. Fan shall be ENERGY STAR rated and certified by the Home Ventilating Institute (HVI). Fan shall include energy efficient compact fluorescent lighting. Evaluated by Underwriters Laboratories and conform to both UL and cUL safety standards.
   3. Motor/Blower:
      a. Enclosed DC brushless motor technology rated for continuous run.
      b. Power Rating shall be 120 volts and 60 Hz.
      c. Fan shall be UL listed for tub/shower enclosure when used with a GFCI branch circuit wiring and use in insulated ceiling (TYPE I.C.).
      d. Motor equipped with thermal cut-off fuse control.
      e. Removable with permanently lubricated plug–in motor.
   4. Housing:
      a. Rust proof paint, galvanized steel body.
      b. Detachable 4" diameter duct adapter.
      c. Built in backdraft damper.
      d. Double hanger bar system allowing for ideal positioning.
   5. Grille:
      a. Attractive design using PP material.
      b. Attaches directly to housing with torsion springs.
   6. Light:

a. One 32-watt electronic ballast compact fluorescent lamps included.
b. One 4-watt, night-light included.

PART 3 – EXECUTION

3.01 INSTALLATION

A. Ductwork:
1. Ensure return air grilles will not allow line of site noise to transfer to adjacent space. Use a sound barrier or some other material to isolate the grille from the unit. A supply grille, boot and short piece of flex duct pointed away from the unit can greatly attenuate equipment noise.
2. Use a canvas isolation duct connector at the supply and return duct connection of the unit.
3. Internally line the discharge and return duct within the first 4-8 feet of unit with acoustic insulation. Install an internally lined 'L' shaped return duct elbow at return grille. Face the elbow away from adjacent units.
4. Always install at least one 90° elbow in the discharge duct to eliminate line of sight noise transmission of the blower.
5. Use turning vanes at all elbows and tees to reduce turbulence.
6. Limit supply duct velocities to less than 1000 fpm
7. Design and install ductwork as stiff as possible
8. Allow 3 duct diameters both up and down stream of the unit before any fittings or transitions are installed.
9. Use duct sealant on all duct joints.
10. Install a short (2-4') of flex duct on all branch ducts just prior to discharge boot or diffuser to reduce vibration and duct sound prior to delivery in the room.
11. Locate the branch duct balancing damper as far away from the diffuser as possible.
12. In ceiling plenum systems, install an internally lined 'L' shaped return duct elbow at unit. Face the elbow away from adjacent units (horizontal).

3.02 TESTING

A. Testing and balancing of HVAC System to be done in accordance with ASHRAE standards and meet Manufacturer requirements of the Heat-Pump unit.

END OF SECTION

SECTION 23 56 13.13
HEATING SOLAR FLAT-PLATE COLLECTORS

PART 1 – GENERAL

1.01 SUMMARY

A. Section Includes
   1. Solar Hot Water Flat-Plate Collectors.

B. Related Requirements
   1. Section 22 11 16: Domestic Water Piping.
   2. Section 22 33 30.23: Residential, Collector-to-Tank, Solar-Electric Domestic Water Heaters.

1.02 REFERENCES

A. Reference Standards
   1. IRC – International Residential Code.
   2. IPC – International Plumbing Code.
   3. UL – Underwriters Laboratories Inc.
   4. UPC – Uniform Plumbing Code.
   5. ASTM – American Society for Testing and Materials.

1.03 SUBMITTALS

A. Product Data
   1. Submit product sheets and specifications for Solar Hot Water Flat-Plate Collectors.

1.04 QUALITY ASSURANCE

A. Certificates
   1. UL certification.
   2. Compliance with IRC, ASTM, and ASHRAE standards.

PART 2 – PRODUCTS

2.01 MANUFACTURERS

A. Heliodyne® Inc. (or other manufacturer with similar product meeting all codes and requirements). www.heliodyne.com

2.02 SOLAR HOT WATER FLAT-PLATE COLLECTORS

A. Heliodyne® GOBI 406 Solar Collectors.
   1. Panels will be installed in conjunction with Solar Hot Water System to provide thermal energy to water as it passes through panel setup and then returns to Solar Hot Water Storage Tanks.

PART 3 – EXECUTION

3.01 INSTALLATION

A. System shall be installed following Solar Thermal System sizing and mounting standards. Follow Manufacturer's requirements as well as following IRC, IPC, and UPC standards.

3.02 TESTING

A. System testing shall be performed to Manufacturer's requirements.

END OF SECTION

SECTION 23 71 13.23
PRESSURIZED-WATER THERMAL STORAGE TANKS

PART 1 – GENERAL

1.01 SUMMARY

A. Section Includes
1. Thermal Mass Pillow Tank.

B. Related Requirements
1. Section 23 21 13.43: Thermal Mass-Loop Heat-Pump Piping.
2. Section 23 21 23.13: In-Line Centrifugal Hydronic Pumps.
3. Section 23 81 46: Water-Source Unitary Heat Pumps.
4. Section 23 71 13.26: Phase Change Material for Thermal Mass.

1.02 REFERENCES

A. Reference Standards
1. IRC – International Residential Code.
2. ASHRAE – American Society of Heating, Refrigerating and Air-Conditioning Engineers.
3. UL – Underwriters Laboratories Inc.
4. ASTM – American Society for Testing and Materials.

1.03 SUBMITTALS

A. Product Data
1. Submit product sheets and specifications for Thermal Mass Pillow Tank.

1.04 QUALITY ASSURANCE

A. Certificates
1. UL certification.
2. Compliance with IRC, ASTM, ASHRAE standards.

1.05 WARRANTY

A. Manufacturer's Warranty
1. The Original Rainwater Pillow®: Rainwater Collection Solutions, Inc., warrants that for 5 years from the date of purchase that The Original Rainwater Pillow will be free from defects in materials. This warranty extends to the initial purchaser of The Original Rainwater Pillow, and is valid for the 5 years from the

date of purchase. If within 5 years from the date of purchase, the product shall prove to be defective in the materials used, it shall be repaired or replaced at Rainwater Collection Solutions, Inc., option. The original receipt of purchase is required to determine warranty eligibility. No warranty implied or express is given by Rainwater Collection Solutions, Inc., related to the installation of The Original Rainwater Pillow. This includes any leaks that result from the connection of pipes, pumps, or other devises necessary to the operation of The Original Rainwater Pillow. The Original Rainwater Pillow is not warranted against: acts of God, abuse, tampering, freezing, alteration in design, overfilling, storage of liquids (other than rainwater), and problems associated with the lack of filter maintenance. The Original Rainwater Pillow may not be used for the transportation of liquids, and the warranty does not extend to such uses.

PART 2 – PRODUCTS

2.01 MANUFACTURERS

A. Thermal Mass Pillow Tank:
Rainwater Collection Solutions, Inc. (or other manufacturer with similar product meeting all codes and requirements).
www.rainwaterpillow.com

2.02 THERMAL MASS PILLOW TANK

A. The Original Rainwater Pillow® Tank (1200 Gallon).
1. For use with HVAC System to store Phase Change Material along with water creating a Thermal Mass fluid, which will be circulated through Pillow Tank.
2. The Original Rainwater Pillow is manufactured for long term water storage usage. The Pillows are made from first grade materials and all are provided with a certificate of fitness upon request. The Material is a reinforced polymer alloy (polyester scrim coated on both sides with a PVC polymer). The same heavy duty industrial strength fabric commonly used by the military and fire departments.
3. Ultra violet radiation inhibitors are incorporated in the manufacturing process of the polymers to provide excellent ultra violet radiation resistance.
4. Fabric weight 6.5 oz sq yard. Total weight 30 oz sq yard
5. Its abrasion resistance is > 2,000 cycles. This means that an independent ASTM lab has determined that every square inch of the Original Rainwater Pillow can withstand friction more than 2,000 times before it begins to abrade. The breaking strength of our material is 550 lbs per inch, which means a one-inch strip of it can hold 550 lbs. Tear 80 lbs. Adhesion 35 lbs/inch.
6. Seams are radio frequency welded, which means that we use electromagnetic energy to heat and bond materials together under pressure, ensuring strong, leak-proof seams. Each pillow is pressure tested before shipping. It is severe-weather tolerant, able to sustain extreme temperatures, ranging from -30 to +160 Fahrenheit. Easily repairable with heat or cold bonding.
7. The Original Rainwater Pillow is exceedingly durable and shows excellent resistance to ruptures, abrasions and leaks. It has also been shown to be impervious to rodents in 30 years of experience using

these pillows in crawlspaces, under decks, in yards and a wide variety of other spaces that rodents tend to like, our manufacturer has never seen any rodent damage.

PART 3 – EXECUTION

3.01 INSTALLATION

A. Pillow Tank should be placed on flat area that will be able to drain system. Supports can be used but are not needed as the Pillow is naturally very strong. When connecting pumps and piping be sure to make strong connections and use a leak guard.

B. For Installation of Phase Change Material, see Section 23 71 13.26.

3.02 TESTING

A. Testing of the Thermal Mass Pillow Tank with installed Phase Change Material shall be done prior to installation of the system to check performance of Thermal Mass.

END OF SECTION

SECTION 23 71 13.26
PHASE CHANGE MATERIAL FOR THERMAL MASS

PART 1 – GENERAL

1.01 SUMMARY

A. Section Includes
1. Phase Change Material for Thermal Mass.

B. Related Requirements
1. Section 23 21 13.43: Thermal Mass-Loop Heat-Pump Piping.
2. Section 23 21 23.13: In-Line Centrifugal Hydronic Pumps.
3. Section 23 81 46: Water-Source Unitary Heat Pumps.
4. Section 23 71 13.23: Pressurized-Water Thermal Storage Tanks.

1.02 REFERENCES

A. Reference Standards
1. IRC – International Residential Code.
2. ASHRAE – American Society of Heating, Refrigerating and Air-Conditioning Engineers.
3. UL – Underwriters Laboratories Inc.
4. ASTM – American Society for Testing and Materials.
5. MSDS – Material Safety Data Sheets.

1.03 SUBMITTALS

A. Product Data
1. Submit product sheets and specifications for Phase Change Material for Thermal Mass.
2. MSDS for Phase Change Material to be submitted as well.

1.04 QUALITY ASSURANCE

A. Certificates
1. UL certification.
2. Compliance with IRC, ASTM, and ASHRAE standards.

PART 2 – PRODUCTS

2.01 MANUFACTURERS

A. PCM Products Ltd. (or other manufacturer with similar product meeting all codes and requirements). www.pcmproducts.net/home.htm

2.02 PHASE CHANGE MATERIAL FOR THERMAL MASS

A. TubeICE® containers of PCM products.
   1. For use in Thermal Mass Pillow Tank to provide a temperature range that the Thermal Mass will stay within. This will increase productivity of Heat-Pump unit while replicating a Geothermal Heat-Pump application.
   2. These containers operate on a similar principle to the FlatICE® containers, and are supplied as fully sealed PCM-filled HDPE tubes. The tubular design enables them to be stacked effectively in both rectangular and cylindrical tanks with minimal void space. Once installed, a series of ridges around the circumference of the tube mean that air or water can pass freely between the containers allowing excellent heat exchange properties.
   3. TubeICE® set at an upper and lower Phase Change Temperature shall be used to keep Thermal Mass at most efficient operating temperatures as possible to reduce needed cooling or heating energy from Heat-Pump unit. Approximately 300 gallons of PCM shall be used, which is about 450 TubeICE® units.

PART 3 – EXECUTION

3.01 INSTALLATION

A. TubeICE® shall be inserted into Pillow Tank prior to filling the rest of the tank with water. Once all TubeICE® is installed the Pillow Tank can then be filled with water.

3.02 TESTING

A. Testing of the Thermal Mass Pillow Tank with installed Phase Change Material shall be done prior to installation of the system to check performance of Thermal Mass.

END OF SECTION

SECTION 23 81 46
WATER-SOURCE UNITARY HEAT PUMPS

PART 1 – GENERAL

1.01 SUMMARY

A. Section Includes
1. Water-Source Heat Pump.

B. Related Requirements
1. Section 23 21 23.13: In-Line Centrifugal Hydronic Pumps.
2. Section 23 30 00: HVAC Air Distribution.
3. Section 23 09 23: Direct-Digital Control System for HVAC.
4. Section 23 21 13.43: Thermal Mass-Loop Heat-Pump Piping.
5. Section 23 71 13.23: Pressurized-Water Thermal Storage Tanks.

1.02 REFERENCES

A. Reference Standards
1. IRC – International Residential Code.
2. ASHRAE – American Society of Heating, Refrigerating and Air-Conditioning Engineers.
3. UL – Underwriters Laboratories Inc.
4. AHRI – Air-Conditioning, Heating and Refrigeration Institute.
5. ISO – International Standards Organization.

1.03 SUBMITTALS

A. Product Data
1. Submit product sheets and specifications for Water-Source Heat Pump.

1.04 QUALITY ASSURANCE

A. Certificates
1. UL certification.
2. AHRI certification.
3. Compliance with IRC and ASHRAE standards.

PART 2 – PRODUCTS

2.01 MANUFACTURERS

A. Johnson Controls® (or other manufacturer with similar product meeting all codes and requirements). www.johnsoncontrols.com

2.02 Water-Source Heat Pump

A. Johnson Controls® RJ Series Geothermal/Water Source Heat Pump RJS-H015-ER.
   1. For use with HVAC System to provide heating and cooling to conditioned space inside house, by means of Thermal Mass acting as Geothermal source.
   2. Equipment shall be completely assembled, piped and internally wired. Capacities and characteristics as listed in the schedule and the specifications that follow. The reverse cycle heating/cooling units shall be either suspended type with horizontal air inlet and discharge or floor mounted type with horizontal air inlet and vertical upflow/down flow or rear air discharge. Units shall be AHRI/ISO 13256-1 certified and listed by a nationally recognized safety-testing laboratory or agency, such as ETL Testing Laboratory. Each unit shall be computer run tested at the factory with conditioned water and operation verified to catalog data. Each unit shall be mounted on a pallet and shipped in a corrugated box or stretch-wrapped. The units shall be designed to operate with entering liquid temperature between 20°F and 120°F [-6.7°C and 48.9°C].
   3. Refrigerant Circuit: All units shall utilize the non-ozone depleting and low global warming potential refrigerant R410A. All units shall contain a sealed refrigerant circuit including a hermetic motor-compressor, bidirectional thermostatic expansion valve, finned tube air-to refrigerant heat exchanger, reversing valve, coaxial tube water-to refrigerant heat exchanger, optional hot water generator coil, and service ports. Compressors shall be high-efficiency single speed rotary or scroll, or dual capacity scroll type designed for heat pump duty and mounted on vibration isolators. The compressor shall be double isolation mounted using selected durometer grommets to provide vibration free compressor mounting. The compressor mounting bracket shall be acoustically deadened galvanized steel to prevent vibration transmission to the cabinet. Compressor motors shall be three-phase or single-phase PSC with overload protection. The air coil shall be sized for low face velocity and constructed of lanced aluminum fins bonded to rifled copper tubes in a staggered pattern not less than three rows deep for enhanced performance.
   4. Blower Motor and Assembly: The blower shall be a direct drive centrifugal type with a dynamically balanced wheel. The housing and wheel shall be designed for quiet low outlet velocity operation. The blower housing shall be removable from the unit without disconnecting the supply air ductwork for servicing of the blower motor. The blower motor shall be a variable-speed ECM2 type. The ECM2 blower motor shall be soft starting, shall maintain constant CFM over its operating static range, and shall provide 12 CFM settings. The blower motor shall be isolated from the housing by rubber grommets. The motor shall be permanently lubricated and have thermostatic overload protection. ECM2 motors shall be long-life ball bearing type.

PART 3 – EXECUTION

3.01 INSTALLATION

A. To be installed and tested to Manufacturers requirements and IRC and ASHRAE standards.

B. Unit Location: Locate the unit in an indoor area that allows for easy removal of the filter and access panels. Location should have enough space for service personnel to perform maintenance or repair. Provide sufficient room to make water, electrical and duct connection(s). If the unit is located in a confined space, such as a closet, provisions must be made for return air to freely enter the space by means of a louvered door, etc. Any access panel screws that would be difficult to remove after the unit is installed should be removed prior to setting the unit. On horizontal units, allow adequate room below the unit for a condensate drain trap and do not locate the unit above supply piping. Care should be taken when units are located in unconditioned spaces to prevent damage from frozen water lines and excessive heat that could damage electrical components.

C. Condensate Drain: On vertical units, the internal condensate drain assembly consists of a drain tube which is connected to the drain pan, a 3/4 in. or 1 in. copper female adapter and a flexible connecting hose. On vertical units, a condensate hose is inside all cabinets as a trapping loop; therefore, an external trap is not necessary. On horizontal units, a PVC stub is provided for condensate drain piping connection. An external trap is required (see below). If a vent is necessary, an open stand pipe may be applied to a tee in the field-installed condensate piping. In order to work properly, the vent must be after the trap and away from the unit.

D. Sound Performance: The RJ Series is third party sound rated in accordance with AHRI 260.
   1. Recommendations for Noise Reduction for Horizontal Unit Location:
      a. Specify equipment with quietest sound power ratings
      b. Do not locate units above areas with a required NC 40 or less
      c. Space WSHP at least 10 ft (3m) apart to avoid noise summing of multiple units in a space.
      d. Maximize the height of the unit above the ceiling (horizontal).
      e. Suspend unit with isolation grommets that are appropriately rated to reduce vibrations (horizontal).

3.02 TESTING

A. The system shall follow performance standard AHRI/ASHRAE/ISO 13256-1. After performing testing values can be compared to performance data found in Engineering Guide.

END OF SECTION

SECTION 23 84 16
DEHUMIDIFIERS

PART 1 – GENERAL

1.01 SUMMARY

A. Section Includes
1. Dehumidifier.

B. Related Requirements
1. Section 23 30 00: HVAC Air Distribution.
2. Section 23 09 23: Direct-Digital Control System for HVAC.
3. Section 23 81 46: Water-Source Unitary Heat Pumps.

1.02 REFERENCES

A. Reference Standards
1. IRC – International Residential Code.
2. ASHRAE – American Society of Heating, Refrigerating and Air-Conditioning Engineers.
3. UL – Underwriters Laboratories Inc.
4. AHRI – Air-Conditioning, Heating and Refrigeration Institute.

1.03 SUBMITTALS

A. Product Data
1. Submit product sheets and specifications for Dehumidifier.

1.04 QUALITY ASSURANCE

A. Certificates
1. UL certification.
2. AHRI certification.
3. Compliance with IRC and ASHRAE standards.

PART 2 – PRODUCTS

2.01 MANUFACTURERS

A. Therma-Stor® LLC. (or other manufacturer with similar product meeting all codes and requirements). www.thermastor.com

2.02 DEHUMIDIFIER

A. Ultra-Aire™ 65H Ventilating Dehumidifier.
   1. For use in parallel with HVAC Air Distribution System in order to dehumidifier conditioned air further, or to dehumidify while Heat Pump is not running.
   2. The Ultra-Aire™ 65H uses a refrigeration system similar to an air conditioner's to remove heat and moisture from incoming air, and add heat to the air that is discharged. Hot, high pressure refrigerant gas is routed from the compressor to the condenser coil. The refrigerant is cooled and condensed by giving up its heat to the air that is about to be discharged from the unit. The refrigerant liquid then passes through a strainer and capillary tubing which causes the refrigerant pressure and temperature to drop. It next enters the evaporator coil where it absorbs heat from the incoming air and evaporates. The evaporator operates in a flooded condition, which means that all the evaporator tubes contain liquid refrigerant during normal operation. A flooded evaporator should maintain nearly constant pressure and temperature across the entire coil, from inlet to outlet. The mixture of gas and liquid refrigerant enter the accumulator after leaving the evaporator coil. The accumulator prevents any liquid refrigerant from reaching the compressor. The compressor evacuates the cool refrigerant gas from the accumulator and compresses it to a high pressure and temperature.
   3. Refrigerant Charging: If the refrigerant charge is lost due to service or a leak, a new charge must be accurately weighed in. If any of the old charge is left in the system, it must be recovered before weighing in the new charge. Refer to the unit nameplate for the correct charge weight and refrigerant type.
   4. Compressor/Capacitor Replacement: This compressor is equipped with a two terminal external overload and a run capacitor, but no start capacitor or relay.
   5. Electric Ventilation Damper: The damper will open when the ventilation is called for, allowing fresh air into the structure through the fresh air inlet duct. The electric ventilation damper will remain closed when the ventilation is not activated in order to prevent over-ventilating the structure when the unit is dehumidifying or recirculating the indoor air. The electric ventilation damper operates on 24 Vac from the control circuit. DO NOT connect high voltage to the damper motor or damage to the motor will result. DO NOT force the blade of the damper by hand or damage to the damper motor may result. The damper opens in one direction only. The damper rotates very slowly, allow sufficient time for the damper to cycle. The damper will take approximately one minute to cycle from closed to open or from open to closed.

PART 3 – EXECUTION

3.01 INSTALLATION

A. Prior to installation of the Ultra-Aire™ 65H, the following checklist should be reviewed. The Ultra-Aire™ 65H can be installed in a variety of locations to meet the owner's needs, and be integrated with existing forced air systems or existing ductwork if desired. The location choice is contingent on a variety of requirements not limited to: ease of service, controls access, drainage, filtration, power, fresh-air ventilation (optional), water damage prevention, and current regulatory codes (ASHRAE, fire, etc). Please address all of these issues before you select the location of the device.

B. Power Accessibility: Unit should be located in an area where the cord's length (8') should easily reach a 110-120 VAC electrical outlet with a minimum of a 15 A circuit capacity.
C. Space: Location should have enough clearance to handle the unit's overall dimensions as well as the necessary return/supply ductwork to the unit.

D. Support Structure and Suspension: Place the Ultra-Aire™ 65H on supports to raise the base of the unit. Do not place the Ultra-Aire™ 65H directly on structural building members without vibration absorbers or unwanted noise may result. The Ultra-Aire™ 65H may be suspended with a hang kit (4028111) or a suitable alternative from structural members, as long as the suspending assembly supports the Ultra-Aire™ 65H's base in its entirety. Do not hang the Ultra-Aire™ 65H from the cabinet. Remember to place a drain pan under the unit if it is suspended above a finished area or above an area where water leakage could cause damage.

E. Electrical Requirements: The Ultra-Aire™ 65H plugs into a common grounded 115VAC outlet. The device draws 5.5 Amps under normal operating conditions. If used in an area which may become wet, a ground fault interrupter (GFI) protected circuit is recommended. Please, consult local electrical codes for any further information. Therma-Stor® LLC offers a family of control devices for use with the Ultra-Aire™ 65H. The controls are to be located remotely from the unit and located in the space to be conditioned. The controls are low voltage (24 volt) and should be connected to the Ultra-Aire™ 65H with low voltage wire (thermostat or other appropriate).

F. Supply Air: A short piece of flexible ducting on all Ultra-Aire™ 65H duct connections is recommended to reduce noise and vibration transmitted to rigid ductwork in the structure. Ducting the Ultra-Aire™ 65H as mentioned requires consideration of the following points. Duct Sizing: For total duct lengths up to 25', use a minimum 8" diameter round or equivalent rectangular. For longer lengths, use a minimum 10" diameter or equivalent. Grills or diffusers on the duct ends must not excessively restrict airflow. Connecting to existing HVAC systems: An optional 8" check backdraft damper is available from the factory to prevent reverse air flow through the Ultra-Aire™ 65H. If the Ultra-Aire™ 65H is ducted to the supply of an air handler, the check damper should be placed in the Ultra-Aire™ 65H supply duct.

G. Noise Abatement: A length of 10 feet or more of flex ducting on the outlet of the Ultra-Aire™ 65H will reduce air noise from the fan. A length of flexible ducting on all Ultra-Aire™ 65H duct connections is recommended to reduce noise transmitted to rigid ductwork in the structure.

3.02 TESTING

A. The system should be tested to check performance standards and checked with data from Installation Guide. Troubleshooting section can be used in the case of problems, any further issues can be taken up with technical support.

3.03 MAINTENANCE

A. High Efficiency Air Filter: The Ultra-Aire 65H is equipped with a MERV 11 media filter. This filter should be checked every three months. Operating the unit with a dirty filter will reduce dehumidifier capacity and

efficiency and may cause the compressor to cycle off and on unnecessarily on the defrost control. DO NOT operate the unit without a filter or with a less effective filter. Operating the unit without a filter or with a less effective filter may cause internal damage to the unit and invalidate the product warranty.

END OF SECTION

DIVISION 26 ELECTRICAL

SECTION 26 00 00
ELECTRICAL

PART 1 - GENERAL

1.01 SUMMARY

A. This section provides the specifications for general electrical work. See other specification sections for more detailed specifications related to specific electrical systems.

1.02 REFERENCES

A. The work in this section is subject to the requirements of applicable portions of the following standards:

1. ANSI – American National Standards Institute
2. IEEE – Institute of Electrical and Electronics Engineers
3. NEMA – National Electrical Manufacturers Association
4. NEC – National Electrical Code (NFPA 70, 2008)
5. International Residential Code, 2009
6. ISO – International Standards Organization

1.03 SUBMITTALS

A. Submit in accordance with section 01 30 00 Administrative Requirements. Shop drawings and catalogue cuts for substitute materials shall clearly specify compliance with and/or deviation from specified material. Certification shall not contain statements to imply that the item does not meet requirements specified, such as "as good as"; and "achieve the same end use and results as materials formulated in accordance with the referenced publications". Certifications shall simply state that the item conforms to the requirements specified. Certificates shall be printed on the manufacturer's letterhead and shall be signed by the manufacturer's official authorized to sign certificates of compliance. Review of shop drawings and catalogue cuts shall not release Contractor from complying with intent of specification and drawings. Partial or incomplete submittals will be returned without review.

B. Shop Drawings: Submit complete shop drawings and manufacturer's literature for Architectural review before any work is ordered or fabricated. Partial or incomplete submittals will be returned without review. Submit in accordance with the Section 01 30 00 Administrative Requirements. Submit manufacturer's literature for the following:

1. Load Centers
2. Devices (Receptacles, switches, etc.)
3. Floor Boxes
4. Circuit Breakers
5. Disconnect Switches
6. Time Switches
7. Nameplates

C. As-Built Drawings: Submit as-built drawings.

1.04 GUARANTEE AND CERTIFICATE

A. Any item of material, apparatus, equipment furnished and installed, or construction by the Contractor showing defects in design, construction, quality or workmanship within one year from the date of final acceptance by the University shall be replaced by such new material, apparatus or parts as may be found necessary to make such defective portion of the complete system conform to the true intent and meaning of the specification and/or the drawings. Exceptions shall be fluorescent and incandescent lamps which shall be guaranteed for one half the manufacturer's listed life time. Such repairs or replacement shall be made by the Contractor or his surety, free of all expense to the University.

1.05 GENERAL REQUIREMENTS

A. The Contractor shall furnish all labor, materials (except as hereinafter noted), tools, equipment and appliances required to provide and install all Electrical Work, complete, as indicated on the drawings and/or as herein specified. The drawings note various sizes of equipment as determined for basis of design; the electrical work, however, shall be installed to comply with the equipment furnished by the successful supplier. The work shall include but not necessarily be limited to, the following:

1. Complete power distribution system.
2. Complete general use and special power systems.
3. Connection and testing of appliances and equipment furnished by others requiring electrical connections.

1.06 COORDINATION WITH UTILITY COMPANIES AND OTHER TRADES

A. During construction, Contractor shall coordinate his work with utilities, and other trades to avoid omissions and overlapping of responsibilities.

1.07 CODES, REGULATIONS AND STANDARD SPECIFICATIONS

A. Work shall conform to the 2008 National Electrical Code and the 2009 International Residential Code.

B. Applicable rules, standards and specifications of following associations shall apply to materials and workmanship:

1. American National Standards Institute (ANSI)
2. Illumination Engineering Society of North America (IESNA)
3. National Board of Fire Underwriters (NBFU)
4. National Electrical Manufacturer's Association (NEMA)
5. National Fire Protection Association (NFPA)
6. Underwriters' Laboratories, Inc. (UL)

PART 2 – PRODUCTS

2.01 MATERIALS

A. All materials shall be new, except as specifically noted, and shall bear the label of Underwriters' Laboratories whenever standards have been established and label service is normally and regularly furnished by the agency.

B. Raceways:

1. Conduits: EMT and galvanized rigid steel, 3/4" minimum diameter with compression or threaded fittings, respectively. Aluminum conduits shall not be used.
2. Non-Metallic Conduit: PVC Schedule 40, 3/4" minimum diameter.
3. Flexible Conduit: 3/4" minimum, zinc-coated inside and outside; for wet or moist areas -- liquid-tight with factory fittings and UV stabilized PVC jacket.

http://ecatalog.squared.com/techlib/docdetail.cfm?oid=0900892680178a59

C. Wires and Cables: Conductors shall be copper, No. 12 AWG minimum; No. 10 AWG and smaller, solid and round; No. 8 AWG and larger, 7 or 19 strands concentric. All conductors No. 6 and smaller shall be types THW and RHW. All conductors No. 4 AWG and larger shall be type THWN with neoprene jacket. Conductors used for fire alarm, sound system, and control wiring may be sized according to the system manufacturer based on their load and voltage drop calculations and code requirements.

D. Metal clad Cables: Metal clad type "MC" cables shall be no. 12 minimum and include a separate green equipment grounding conductor.
http://www.solarpanelstore.com/solar-power.wire.mc_extension.50_mc4_cable.info.1.html

E. Outlet and Small Junction Boxes: Pressed, zinc-coated steel, minimum nominal size 4", minimum depth 1-1/2", with raised cover- ring for devices in concrete masonry units. Exposed boxes and weather exposed boxes shall be ferrous alloy, prime painted and enamel finished, with threaded hubs for conduit connection. Surface mounted boxes shall be smooth walled with share corners.

F. Floor Boxes: Cast iron with corrosion resistant finish, fully adjustable tops, concrete-tight, brass tile and cover flange, screw fastened covers, 1" diameter threaded conduit openings. Walker 880CS1-1 or pre-approved equal.

1. Combination Outlet: Cast flush mounted floor box with threaded conduit hubs, water-tight, fully adjustable, hinged carpet / tile trim plate with two wire management blocks, two duplex receptacle (NEMA 5-20R) and two comm (RJ45 jacks) brackets which shall be able to accept Systimax Cat. 6 MGS 400 jacks. Wiremold RFB series or pre-approved equal.
2. Duplex Outlet: Brass duplex cover plate, flip open lids with hold down screw, NEMA 5-20R duplex receptacle. Walker 828R or pre-approved equal.

http://www.kirbyrisk.com/woeb/datasheets/WIREMDC00002_F3_5_F3_2.pdf

G. Large Junction Boxes: For dry interior locations, the box shall be fabricated from NEC gauge galvanized steel with matching screw-on type cover, field punched knockouts. Flush mounted junction boxes shall have flange type covers. For exterior, damp and wet locations, boxes shall be NEMA 4X stainless steel (316). All screws and hardware shall be stainless steel (316).
http://www.zackelectronics.com/servlet/the-16356/10%22-x-8%22-x/Detail

H. Enclosures and Cabinets: Enclosures and cabinets for panelboards, breakers, and switches shall be NEMA type, fabricated from galvanized steel, or as indicated, prime painted and enamel finished according to NEMA specifications. For dry interior locations, enclosures shall be NEMA 1. For areas exposed to the elements, damp and wet locations, enclosures shall be NEMA 4X stainless steel (316) with stainless steel (316) fasteners and hardware. For breakers and switches located in damp, wet or high humidity areas provide NEMA 4X stainless steel (316) enclosures.

I. Device and Cover Plates:

1. Plates for interior flush construction shall be smooth reinforced plastic, with suitable hole, and color to match device.
2. Plates for areas exposed to the elements, damp, or wet installations shall be weatherproof with lockable U.V. stabilized covers. Covers shall permit plugs to be connected without compromising the integrity of the protective nature of the cover.
3. Light switch plates for areas exposed to the elements, damp, or wet installations shall be neoprene gasketted cast aluminum, gray powder coat finish, with spring loaded neoprene gasketted flip-open lids.

J. Tumbler Switches: Single or double pole, 3 or 4 way, as required, non-mercury, quiet, 20 amperes, 120-277 volt, UL labeled AC type, silvered contacts, ivory, tumbler switch with endurance of 10,000 make-breaks. Enclose in outlet box and device plate. Hubbell No. 1200 series, Bryant No. 4900 series, Arrow Hart No. 1990 series or pre-approved equal.

K. Single and Duplex Receptacles:

1. Single and Duplex, 20 ampere, 125-volt, back and side wired, 3 wires, grounding type in ivory plastic body with parallel and ground U-shaped slots, tamper resistant. Enclose in outlet box and device plate. Hubbell No. 5262, Leviton No. 5362 or pre-approved equal.
2. Ground Fault Interrupting receptacles shall be similar to above except have test and reset switches and maximum allowable leakage current shall be 5 milli-amperes. Tamper resistant. Receptacles for use in damp of wet locations shall be UL Listed weather resistant type.
3. Floor mounted single and duplex receptacles: 20 ampere, 125-volt, back and side wired, 3 wires, grounding type in ivory plastic body with parallel and ground U-shaped slots, tamper resistant. Enclose in outlet box and device plate. Hubbell No. 5262, Leviton No. 5362 or pre-approved equal.

L. Special Receptacles: Contractor shall coordinate receptacle requirement type with contractor furnishing equipment and provide matching plug and cap. Outlet box size shall be commensurate with receptacle dimensions. Special receptacles shall conform to NEMA requirements. Provide matching cap and cord, 6' length minimum, coordinate length with equipment being supplied.

M. Load Center: Refer to Section 26 30 00.

N. Meter Socket: Refer to Section 26 30 00.

O. Equipment Disconnect Switches: Heavy duty non-fusible safety switch as indicated, minimum ampacity, poles, and voltage shall match over-current protection device being served from. Horsepower rated when used as motor disconnect. Contacts shall be lever operated, spring loaded and enclosed in NEMA 1 enclosures for interior locations and NEMA 4x stainless steel (316) enclosures for areas exposed to the elements, and damp and wet locations. Manufacture and install according to NEC Article 240, 380, and 430. Siemens, General Electric, Eaton Cutler Hammer, and Square-D or pre-approved equal.

P. Nameplates: Laminated nameplates shall be provided for each meter, load center, switch, and cabinet for identification purposes. Refer to section 26 09 10.

Q. Hardware, Supports, Backing, Etc.: All hardware, supports, backing and other accessories necessary to install electrical equipment shall be provided. Wood materials shall be "wolmanized" treated against termites, iron or steel materials shall be galvanized for corrosion protection, and non-ferrous materials shall be brass or bronze.

PART 3 – EXECUTION

3.01 EXAMINATION

A. Rules and Regulations: The entire installation shall be made in strict accordance with the latest rules and regulations of the National Board of Fire Underwriters, the 2008 National Electrical Code, 2009 International

Residential Code and the local Electrical Bureau. All work shall be inspected by the proper local authorities as it progresses. The Contractor shall deliver certificates of completion and inspection to the University.

B. Construction Methods: Construction shall conform to construction practices as recommended by the American Electricians Handbook by Croft (latest edition), Edison Electric Institute, National Electrical Code, National Electrical Safety Code and applicable instructions of manufacturers of equipment and material supplied for this project.

C. Materials and Workmanship: All labor and materials of every kind shall be subject to the approval of the University, who shall be afforded every facility for ascertaining the competence of such labor and examining such materials as he may deem necessary. Concealed work shall be reopened at random as directed during formal inspections by the University. Materials shall be new and shall bear the inspection label of the Underwriters' Laboratories, Inc. Brand names and catalog numbers used in this specification indicate the standards of design and quality required. Substitution of other brands or catalog numbers shall conform to the requirements in the Bidding Documents. All high voltage work shall be performed by qualified electricians certified to work on high voltage systems.

D. Record Drawings: The Contractor shall maintain an accurate and adequate record of each change as it occurs, regardless of how ordered.

E. Plans and Specification: This specification is intended to cover all labor, materials and standards of workmanship to be employed in the work indicated on the plans and called for in the specification or reasonably implied therein. The plans and specification supplement one another. Any part of the work mentioned in one and not represented in the other, shall be done the same as if it has been mentioned in both. The Contractor shall not make alterations in the drawings and specification.

F. Discrepancies and Interpretations:

1. Should the Contractor find any discrepancies in or omissions from any of the documents or be in doubt as to their meaning, he shall advise the University who will issue any necessary clarification within a time period which does not disrupt the progress of the work.

2. All interpretation and supplemental instructions will be in the form of a written addenda to the Contract Documents.

3. Should any discrepancy arise from the failure of the Contractor to notify the University, the higher quality or larger quantity of item shall prevail. The University shall make the final interpretation and judgment.

4. In the event of a discrepancy between small scale drawings and large scale details, or between drawings and specification, on which is in violation of any regulations, ordinances, laws or codes, the discrepancy,

if known by the Contractor, shall be immediately brought to the attention of the University for a decision before proceeding with the particular work involved.

G. Symbols: The standard electrical symbols together with the special symbols, notes and instructions shown on the drawings indicate the work and outlets required and are all to be included as a part of this specification.

H. Coordination: This specification is accompanied by floor plans of the buildings, sections and elevations, and site plans indicating locations of all outlets, switch controls, service runs, and other electrical apparatus. These locations are approximate and, before installing, the Contractor shall study the adjacent architectural details and actually make the installation in the most logical manner. Any outlet may be relocated within ten feet before installation at the direction of the University. The circuit routing is typical only and may be varied in any logical manner.

3.02 INSTALLATION

A. Grounding:

1. All services, metallic enclosures, raceways, and electrical equipment shall be grounded according to requirements of NEC Article 250. At building, concrete encased horizontal grounding electrode bonded with bare copper wire to obtain a ground of 25 ohms or less as measured by three point pot. method with an electric ground megger. Bond ground to structural steel and nearest cold water pipe and to building entrance equipment with bare copper. Final connection to equipment, raceways, grounding type receptacles and other metallic parts directly exposed to ungrounded electric conductors shall be No. 8 AWG minimum, copper, NEC type TW, green insulation. Use approved bonding terminal at panels.
2. All grounding wire runs within building shall be routed together with circuit conductors.
3. Bond and ground all feeder conduits to panelboard enclosures.

B. Wiring System:

1. Below grade and for PV wiring from inverter junction box to PV panels use Schedule 40 PVC. Provide separate ground wire and rise out of ground with rigid steel conduit.
2. Above finished ground floor where exposed to damage, exposed below 7'- 0" above finished floor, in non-air conditioned locations, and exposed on the exterior of the building use rigid steel conduit with compression fittings.
3. Above finished ground floor where concealed in walls or ceilings, and not exposed to damage, use EMT compression fittings.
4. All wiring shall be installed in conduits except as noted.
5. Conduit system shall be continuous from outlet to outlet or fitting to fitting so that electrical continuity is obtained between all conduits of the system.

6. Conduits cut square and inner edges reamed. Butt together evenly within couplings.
7. Make bends and offsets with hickey or conduit bending machine. Do not use vise or pipe tee. Flattened or crushed conduit not acceptable.
8. Use of running threads not permitted. Where conduits cannot be joined by standard threaded couplings, approved water-tight conduit unions shall be used.
9. Cap conduits during construction with plastic or metal capped bushings to prevent entrance of dirt or moisture. Swab all conduits and dry before installing wires. Provide seals on all conduits entering the building, or pad mounted equipment, where the conduit is connected to manholes, hand holes, light poles, or other pad mounted equipment.
10. Pull strings shall be placed in all empty conduits ten feet in length or longer.
11. Install insulating bushings and two locknuts on each end of every conduit run at enclosures and boxes. Provide grounding bushings as required.
12. Conduits passing through floor slabs shall be fire proofed.
13. Provide control conduit and wiring between building management system and main programmable panelboard in main electrical room. Provide control conduit and wiring between all programmable panelboards.
14. Conduit bodies shall not be used on telecom conduits.

C. Conductors:

1. Mechanical means for pulling shall be torque-limiting type and not used for #2 AWG and smaller wires.
2. Pulling tension shall not exceed wire manufacturer's recommendations.
3. Where necessary, powdered soapstone may be used as a lubricant for drawing wires through conduit. No other means of lubricating will be allowed.
4. Form neatly in enclosures for minimum of crossovers. Tag all feeders.

D. Splicing of Wire and Cable:

1. Wires shall be formed neatly in enclosures and boxes.
2. Splices made according to NEC Article 110.
3. Splices shall be reinsulated. Remove all sharp points that can pierce tape. Use Minnesota Mining and Manufacturing Co. "Scotch" #33 tape, or pre-approved equal. Splices in pull boxes shall be water-tight.

E. Boxes and Enclosures:

1. Provide outlet boxes in hollow tiles or concealed in other spaces with extensions or raised rings of such depth that metal will be flush with surrounding surfaces or openings.
2. Offset boxes, on opposite side of walls, by 6" to minimize noise transmission thru walls.
3. Boxes installed in 2 and 3 hour fire rated walls shall be fire proofed to maintain the integrity of the fire rated walls.

4. Boxes to be plumb and exactly flush.

F. Light Switches: Light switches shall be installed 46" to center above the finished floor and four inches from door casings (six inches from uncased openings) to the center of switch for single gang switches and the same distance to center of switch nearest casing or opening in cases of multi-gang switches unless otherwise indicated. Where more than one switch occurs at one location, they shall be ganged under one plate. Other switches shall be located as shown.

G. Convenience Outlets: Shall be installed vertically, eighteen inches above the finish floor unless otherwise indicated.

H. Finishing:

1. All cutting that may be required for complete installation of the electrical work shall be carefully performed, and all patching shall be finished in first-class condition by the Contractor.
2. Close unused knockouts in boxes or enclosures with metal cap.
3. Wipe clean all exposed raceways and enclosures with rag and solvent. Unfinished raceways and enclosures shall be prime- painted and finished to blend into background. (Do not cover nameplates.) Factory finished enclosures shall not be painted.

I. Miscellaneous Details:

1. Cut, drill and patch as required installing electrical system. Repair any surface damaged or marred by notching, drilling or any other process necessary for installation of electrical work. Cutting, repairs and refinishing subject to the approval of the University. Need for remedial work determined by University as attributable to poor coordination and workmanship shall be cause for reconstruction to the satisfaction of the University.
2. Attachment of electrical equipment to wood by non-ferrous wood screws. Powder-charge-driven studs and anchors permitted only with prior approval.
3. Complete all panel circuit directories, using typewriter. Verify "room" and "use" designations before typing.
4. Prime and paint all exposed conduits.
5. All grounding wire within building run in rigid steel conduit, and where practicable, routed together with circuit conductors.
6. Furnish necessary test equipment and make all tests necessary to check for unspecified grounding, shorts and wrong connections. Correct faulty conditions, if any.
7. Label all electrical equipment. Identification labeling shall be by competent craftsmen. Letters to be 1-1/2" high minimum, black paint. Dynamo labels are not acceptable. Panel label designation: APANEL (Name)120/208V, 3-phase, 4WSN". Tag all empty conduit in terminal cabinets and boxes giving destination. Use fiber disc tags in bushing.

8. Provide arc flash warning labels on all electrical equipment as required by NEC Article 110.16.

3.02 TESTING AND INSPECTION

A. If the University (or its representative) discovers any errors, the Contractor, shall go over all similar portions of the entire job, taking the necessary or directed remedial action.

B. Interior installations, 600 volts and less shall be tested for insulation resistance after all wiring is completed and readyfor connection to fixtures and equipment. Using a 500V megger, measure and record the insulation resistance from phase to phase and phase to neutral. The records shall be turned over to the University for proper disposition.

C. The Contractor shall re-tape splices which have been bared for inspection. The Contractor shall test all portions of the electrical system furnished by him for proper operation and freedom from accidental grounds. All tests shall be subject to the approval of the University.

D. Wherever test or inspection reveals faulty equipment or installation, the Contractor shall take corrective action repairing or replacing equipment or installation as directed.

E. The Contractor shall open, remove, and replace switchboard and panelboard covers for pre-final and final inspections by the University.

END OF SECTION

SECTION 26 09 13
ELECTRICAL POWER MONITORING AND CONTROL

PART 1 – GENERAL

1.01 SUMMARY

A. Multiple programmable subsystems with electrical Components, Devices, and Accessories.

1.02 SUBMITTALS

A. Product specification sheets
B. Manufacturer instructions including detail drawings.

PART 2 – PRODUCTS

2.01 MANUFACTURERS

A. eGauge Systems LLC
1935 Stony Hill Road
Boulder CO 80305
Phone: 720-545-9767

B. Actiontec Electronics, Inc
760 North Mary Avenue
Sunnyvale, CA 94085
Phone: 408-752-7700

C. Vykon North America
3951 Westerre Parkway
Suite 350, Richmond VA 23233
Phone: 804-747-4771

D. Panduit Corp.
18900 Panduit Drive,
Tinley Park IL 60487
Phone: 800-777-3300

E. American Electrical, Inc.
456 Southlake Boulevard
Richmond VA 23236

Phone: 804-379-2899

F. Magnecraft, Inc.
1300 South Wolf Road
Des Plaines, IL 60018
Phone: 847-441-2526

G. Tyco Electronics Corporation
4550 New Linden Hill Road
Suite 140, Wilmington, DE 19808-2952
Phone: 302-633-2740

2.02 MATERIALS

A. eGauge: Energy monitoring unit, aggregating the power consumption for each sub-circuit. Sends data through power line channel (PLC)

B. Actiontec MegaPlug Ethernet Adapter: Converts PLC data to packet IP, adapter to Ethernet cable.

C. Vykon ENC-001: Panel enclosure for hardware monitoring/control system.

D. Panduit G1X1.5LG6-1: Conduit for hardware monitoring/control system cables.

E. Vykon JACE-2: Network/control unit for hardware monitoring/control system.

F. Vykon IO-16: Input/output unit, with 4 analog outputs, 4 digital relay outputs, and 8 universal inputs, to control and monitor status of hardware subsystems directly.

G. Vykon NPB-PWR-UN: Power supply unit for Vykon cascaded control units.

H. American Electrical TS3575SL DIN Rail: Mounting bracket for Vykon control systems.

I. Magnecraft 35mm Din-Rail End Clip: Securing clip for DIN rail-mounted components.

J. Tyco Electronics 27E893 Socket: Mount for power relay components.

K. Tyco Electronics KUL-5A15S-120 Bistable Relay: Switch for on/off power controls.

L. Power Wiring to Supply of Monitoring and Control Units: Not smaller than #16 AWG
   1. I/O Control Cables: No smaller than #18 AWG

PART 3 – EXECUTION

3.01 INSTALLATION

A. GENERAL
   1. Installation as per manufacturer directions, as supplemented by detail drawings and instructions provided in this specification section.
   2. Installation of all components will be carried out in a de-energized state to prevent equipment damage or injury.

B. ENC-001
   1. Installation as per floor plan and manufacturer's instructions.

C. G1X1.5LG6-1
   1. Where cables will be routed from breaker panel to ENC-001 control panel, G1X1.5LG6-1 will be used to ensure protection of exposed cabling and safety of occupants.

D. JACE-2
   1. Securely install the DIN rail using at least two screws, near both ends of the rail.
   2. Position the JACE-2 on the rail, tilting to hook DIN rail tabs over one edge of the DIN rail.
   3. Use a screwdriver to pry down the plastic locking clip, and push down and in on the JACE-2, to force the locking clip to snap over the other edge of the DIN rail.

E. IO-16
   1. Mount the IO-16 onto the DIN rail, to the right of the JACE-2, in the same manner as the JACE-2.
   2. Slide the IO-16 along the DIN rail to connect its 20-position plug into the JACE-2.

F. NPB-PWR-UN
   1. Mount the NPB-PWR-UN onto the DIN rail, to the right of the IO-16, in the same manner.
   2. Slide the NPB-PWR-UN along the DIN rail to connect its 20-position plug into the IO-16.

G. RELAYS/SOCKETS
   1. Snap sockets onto DIN rail following control components.
   2. Insert relays into sockets according to detail drawings.
   3. Wire relays to Digital Relay Out ports as indicated in wiring diagram/detail.
   4. To keep the final assembly together, secure at both ends with DIN rail end-clips provided. This also prevents the assembly from sliding on the DIN rail. See detail drawings.

H. EGAUGE
   1. Refer to manufacturer's installation instructions.
   2. Current Transducers (CTs) are to be installed as per manufacturer's installation instructions, one per circuit per phase. 100A rated CTs are to be installed as per manufacturer's installation instructions on the main power supply legs.

3.02 TESTING

A. Energize power units and confirm status LED activation as per manufacturer's installation instructions.

B. Upon completion of installation, programmer software and system designers will test and verify system operation.

END OF SECTION

SECTION 26 09 23

LIGHTING CONTROL DEVICES

PART 1 – GENERAL

1.01 SUMMARY

A. Subsystems of LED Light Panels and Programmed Controller Kit with electrical Components, Devices, and Accessories in FRP shell.

1.02 SUBMITTALS

A. Product data sheets

B. Manufacturer installation instructions

C. Shop Drawings with components listed and labeled.

PART 2 – PRODUCTS

2.01 MANUFACTURERS

A. Super Bright LEDs, Inc
4400 Earth City Expressway
St. Louis, Missouri 63045-1328
Tel: 866-590-3533
Fax: 314-972-6202
http://www.superbrightleds.com

B. Meteor Lighting
http://www.meteor-lighting.com

C. Eco Light 255 Distribution Drive
Unit 104 Sparks, Nevada 89441
Tel: 775-636-6060
Fax:775-636-8411
http://www.ecolightled.com

D. inoage GmbH (Madrix)
01307 Dresden, Germany
Phone: +49 351 48205630
Fax: +49 351 48205631
Fax:775-636-8411
E-mail: info@madrix.com

http://www.madrix.com

E. Lightech
Phone: (847)-401-7226
Fax: (866) LIGHTECH (544-4832)
E-mail: Americas@lightechinc.com
http://lightechinc.com

2.02 MATERIALS

A. LED Strips: Super Brite LEDs xFLS-RGB300, 1200 mcd light intensity, 5m long, operates at 12V DC and draws 1.86A. Power supply to be installed per NEC 725.124 circuit marking and 725.127 wiring methods. Per NEC Table 11(B) for 0-20V loads, two RGB-150 LED strips in parallel draw 3.7A, which is within the 5A limit for class II transformers. Rated for 50,000 hours.

B. LED Lights: Meteor Lighting SH-170C, automated solar – controlled super capacitor charged, outdoor rated

C. DMX Wireless transceiver: Ecolight LC-GT-DMX-TR24-K 2.4 GHz Wireless DMX Transmitter and Receiver Kit. A total of 390 RGB LED panels require 1170 DMX channels. A single DMX universe supports 512 channels. In order to control 1170 channels, three DMX universes are required. Each transceiver pair can be set to a different universe. 1 year warranty.
http://cdn.ecolightled.com/downloads/lc_gt_dmx_tr24_web.pdf

D. DMX Encoder: Madrix NEO offers 512 channels of DMX communication. Using three NEOs simultaneously with Madrix software, multiple universes may be created to operate in unison. Madrix software will be used to create a matrix of RGB LED pixels driven by NEO. 2 year warranty.

E. Class II 12V transformer: Lightech LRT 363 360W supply with 6 12V class II outputs. UL listed. Each subshell lighting system requires a 60W class II 12V supply for a total of 5 sources per module. The LRT 363 contains six outputs, one of which will be used by network control devices. See Section 26 09 43.

F. Controlling Computer: Minimum PC Requirements: Pentium 4, 2.4GHz Processor (or equivalent), 512 MB RAM, Available USB2.0 Port, Windows XP (with Service Pack 2 or higher installed)

G. DMX Lighting Decoder: Super Brite LEDs LC-OL-DMX-D - Decoder - 12VDC 2A 72W. These decoders are very small and act as a PWM driver for each LED panel. Each decoder will have a different DMX address, allowing for individual control of LED panels. The size of the decoder is a critical issue and has greatly limited product selection. 1 year warranty.
http://cdn.ecolightled.com/downloads/dmx_driver_specs_1.pdf

PART 3 – EXECUTION

3.01 INSTALLATION

A. LED Light Panel:
1. Prefabricated insulation panels with LED fixtures are to be placed in wall cavity. RJ45 cables connect DMX data lines between DMX decoders on panels.
2. Panels will be wired in parallel along the radial axis equating to 13 panels per transformer output. There will be 5 subshell groups of panels connected respectively to each output on the transformer per house module.
3. Power supply to be installed per NEC 725.124 circuit marking and 725.127 wiring methods.
4. Consult system designer with any discrepancies.

B. Wireless Transceivers:
1. Transmitters are to be connected to Madrix NEO devices and set to transmit three separate universes.
2. XLR DMX cable from receiver to be converted to RJ45 standard for LED panels.
3. DMX decoders will be wired in parallel with the appropriate wireless receiver output.
4. Consult system designer with any discrepancies.

3.02 TESTING

A. LED Light Panel:

1. Upon completion of construction and installation, system designer will test and verify system operation.

B. Programmed Controller kit: Upon completion of construction and installation, system designer will test and verify system operation.

END OF SECTION

SECTION 26 09 43
NETWORK LIGHTING CONTROL

PART 1 – GENERAL

1.01 SUMMARY

A. Consists of two subsystems Voice Recognition Control and Gesture Control with Electrical Components, Devices, and Accessories.

1.02 SUBMITTALS

A. Product data sheets

B. Manufacturer installation instructions including detail drawings.

1.03 WARRANTY

A. Provide warranty for system components.

PART 2 – PRODUCTS

2.01 MANUFACTURERS

A. Hosa Technology
6650 Caballero Blvd
Buena Park, CA, 90620
Phone: 714-522-8878
Email: sales@hosatech.com
http://www.hosatech.com

B. Alesis
200 Scenic View Drive, Suite 201
Cumberland RI, 02864
Phone: 401-658-5760
http://alesis.com/en/index.php

C. Infinite Cables
421 Bentley St. Unit 9
Markham ON, L3R9T2
Phone: 1-866-207-6442

http://infinitecables.com/

D. Wired Home, (via Parts Express)
725 Pleasant Valley Dr.
Springboro OH, 45066
Phone: 1-800-338-05318
Email: CustomerService@Parts-Express.com
http://www.wiredhome.com/

E. Microsoft Corporation
One Microsoft Way
Redmond, WA 98052-6399
Phone: 1-800-892-5234
Email: support@microsoft.com
http://www.microsoft.com/

2.02 MATERIALS

A. Microphone: Audio Technica ATR4600

B. TRS adapter and connector: Hosa GPM103: 3.5mm to ¼"

C. Multichannel mixer/audio interface: Alesis MultiMix 16 USB 2.0

D. TRS ¼" keystone wall plate insert: Infinite Cables WP-IN-TRS

E. Single gang 1-port keystone wall plate: Wired Home KWHC9

F. Single gang 6-port keystone wall plate: Wired Home KWHG9

G. Controlling Computer: Minimum PC Requirements: Pentium 4, 2.4GHz Processor (or equivalent), 512 MB RAM, Available USB2.0 Port, Windows XP (with Service Pack 2 or higher installed)

H. Kinect Sensor for Xbox 360
   1. Class 2 transformer/Power Supply for Kinect Sensor

I. Wireless transmitter and a receiver: EW2000-NA- ASUS

J. Hosa CSS-525: ¼" TRS extension cables to run from microphones to audio mixer, 25 ft.

K. Hosa CSS-510: ¼" TRS extension cables to run from microphones to audio mixer, 10 ft

L. Hosa CSS-550: ¼" TRS extension cables to run from microphones to audio mixer, 50 ft.

M. USB extension cables to run from Microsoft Kinect to USB hub in the following lengths.
   1. 25 ft.
   2. 20 ft.
   3. 10 ft.
   4. 1 ft.

N. USB Hub with six ports

PART 3 – EXECUTION

3.01 INSTALLATION

A. General:

   1. Installation of all components will be carried out in a de-energized state to prevent equipment damage or injury.
   2. Installer shall consult system designer, supplemented by detail drawings.

B. Alesis MultiMix 16 USB 2.0

   1. To be installed per manufacturer's instructions near the controlling computer. See drawings for further information on location of computer.

   2. Use Hosa CSS-510 to connect from KWHG9 to CSS-510

C. KWHC9
   1. Installation as per manufacturer's recommendations
   2. To be installed 6'2" above ground according to detailed drawings.

D. WP-IN-TRS
   1. To be inserted with each KWHC9 and KWHG9.
   2. Used to connect KWHC9 or KWHG9 to CSS-525 or CSS-510.

E. KWHG9
   1. To be installed on ground near Alesis MultiMix 16 USB2.0
   2. WP-IN-TRS to be inserted into KWHG9

F. HOSA CSS-525

1. To be installed as per manufacturer's recommendations
2. To be connected from KWHC9 to KWHG9, between (2) WP-IN-TRS behind walls, according to detailed drawings.

G. HOSA CSS-550
1. To be installed as per manufacturer's recommendations
2. To be connected from KWHC9 to KWHG9, between (2) WP-IN-TRS behind walls, according to detailed drawings.

H. HOSA CSS-510
1. To be installed as per manufacturer's recommendations
2. To be connected between KWHG9 and Alesis Multimix 16 USB 2.0

I. Microsoft Kinect
1. Connected to Kinect Modified Power Supply through wall.

3.02 TESTING

A. Voice Recognition Control Testing: Upon completion of installation, programmer software and system designers will need to test and verify system operation.

B. Gesture Control Testing: Upon completion of installation, programmer software and system designers will need to test and verify system operation.

END OF SECTION

SECTION 26 30 00
FACILITY ELECTRICAL POWER GENERATING AND STORING EQUIPMENT

PART 1 – GENERAL

1.01 SUMMARY

A. Photovoltaic system with Electrical Components, Devices, and Accessories.

1.02 Submittals

A. Product specification sheets
B. Product data sheets
C. Manufacturer installation instructions incl. detail drawings

PART 2 – PRODUCTS

2.01 MANUFACTURERS

A. Samsung Electronics CO., LTD
San#24 Nongseo-Dong
GIheung-Gu, Yongin-City, Gyeonggi-Do, Korea 446-711

B. SMA America, LLC
6020 West Oaks Blvd. Ste. 300
Rocklin, CA
Phone: 1-916-615-0870
Email: Service@SMA-America.com

C. EGauge Systems LLC
1935 Stony Hill Road
Boulder CO 80305
Phone: 1-720-545-9767
Email: sales@eguage.net

D. Wiegmann
501 West Apple Street
Freeburg, IL 62243
Phone: 1-618-539-3193 ext:4056

E. Schnieder Electric

www.schneider-electric.us

2.02 MATERIALS

A. Photovoltaic Panel: Samsung LPC244SM: 244W Solar Module for power generation.
http://www.samsung.com/us/business/solarmodules/product.html

B. DC Inverter: SMA Utility Interactive Inverter, Sunny Boy 3000-US: Inverter DC to AC converter.
http://www.sma-america.com/en_US/products/grid-tied-inverters/sunny-boy/sunny-boy-5000-us-6000-us-7000-us-8000-us.html

C. Egauge: Real-Time Web-based Energy Monitor For Renewable Energy Building Demand And Sub Loads
http://www.egauge.net/docs/egauge2b-manual.pdf

D. Wireway:
http://ecatalog.squared.com/techlib/docdetail.cfm?oid=0900892680178a59

E. Nameplates: Bakelite nameplates shall be black finish with white core and shall have ¼" high engraved letter indicating the name of the equipment being served by the device on which the nameplate is to be installed or the name of the device. See drawings for details on inscription. Must be in NEC compliance; see drawing for detailed NEC code.

F. AC Disconnect Switch: Square D 60A Switch DU322RB: AC Disconnect, General Duty Safety Switch with a 60A current rating. Nema 3R.
http://www.grainger.com/Grainger/SQUARE-D-General-Duty-Safety-Switch-1H263?Pid=search

G. Main Circuit Breaker Panel Board: 42 Space, 1 Phase, 3-Wire, 225 A, rated outdoor.
http://www.schneider-electric.com/sites/corporate/en/home.page

H. Utility Meter: General Encompass Electronic Meter KV2c.
http://www.gepower.com/prod_serv/products/metering/en/utility_revenue_meters/kv2c_encompass_elec.htm

I. Meter Socket: Square D Meter Socket UATRS202B: Meter Socket, 200A, 1-phase, 1, Ringless, OH, Nema 3R.
http://www.schneider-electric.com/sites/corporate/en/home.page

2.03 CONDUCTORS, CABLES AND CONDUIT

A. Refer to drawings for details. Confirm NEC compliance, contractor shall have final say to ensure code compliance.

PART 3 – EXECUTION

3.01 INSTALLATION

A. General

1. System shall be installed prior to electric service connection for safety.

2. Installed per manufacturer's instructions and as detailed in drawing. Consult system designer.

3.02 TESTING

A. Installer shall test system after connection to electric service, ensuring branch circuits are turned in the OFF position. Refer to NEC for further details.

END OF SECTION

DIVISION 28 ELECTRONIC SAFERTY AND SERCURITY

SECTION 28 31 46
SMOKE DETECTION SENSORS

PART 1 – GENERAL

1.01 SUMMARY

A. Section Includes
1. Smoke Alarms.

1.02 REFERENCES

A. Reference Standards
1. IRC – International Residential Code.
2. NFPA – National Fire Protection Association.
3. UL – Underwriters Laboratories Inc.

1.03 SUBMITTALS

A. Product Data
1. Submit product sheets and specifications for Smoke Alarms.

1.04 QUALITY ASSURANCE

B. Certificates
1. UL certification of Jockey Pump Controller.
2. Compliance with IRC Section P2904 or NFPA 13D.

PART 2 – PRODUCTS

2.01 MANUFACTURERS

A. First Alert® (or other manufacturer with similar product meeting all codes and requirements) www.firstalert.com

2.02 SMOKE ALARMS

A. (2 ct) First Alert® SA-9120-BCN Hardwired Smoke Alarm with Battery (9V) Backup .
1. For use in house to detect smoke and warn those inside of fire and/or smoke.

PART 3 – EXECUTION

3.01 INSTALLATION

A. To be installed and tested to Manufacturer's requirements and IRC Fire code.

END OF SECTION

DIVISION 32 EXTERIOR IMPROVEMENTS

SECTION 32 80 00
IRRIAGTION

PART 1 – GENERAL

1.01 SUMMARY

A. Section includes:
1. Irrigation pipes
2. Irrigation pumps and controls
3. Water tanks
4. Planting

1.02 Submittals
1. Product specification sheets
2. Manufacturer installation instructions
3. Shop drawings

1.03 WARRANTY

A. Pumps have a three year limited warranty.

B. USB Net Power 8800 – 1 year warranty

C. CEM – 1 year warranty

D. HI 2550 is guaranteed for two years against defects in workmanship and materials when used for their intended purpose and maintained according to instructions. Electrodes and probes are guaranteed for six months. This warranty is limited to repair or replacement free of charge. Damage due to accidents, misuse, tampering or lack of prescribed maintenance is not covered. If service is required, contact the dealer from whom you purchased the instrument. If under warranty, report the model number, date of purchase, serial number and the nature of the problem. If the repair is not covered by the warranty, you will be notified of the charges incurred. If the instrument is to be returned to Hanna Instruments, first obtain a Returned Goods Authorization number from the Technical Service department and then send it with shipping costs prepaid.

E. Fish – all sales final.

F. Plants – all sales final.

PART 2 – PRODUCTS

A. MANUFACTURER
Cal Pump
301 N. MacArthur Blvd.
Oklahoma City, OK 73127 US
P: 800-225-1339
http://www.macarthurwatergardens.com/cal-pump/fountain-pumps.shtm

B. Aviosys International Inc.
9F No. 101 Pan-Hsin Road, Pan Chiao?
220 Taipei, Taiwan
Service@Aviosys.com
http://www.aviosys.com/8800.html

B. 19th Building, 5th Region, Baiwangxin Industry Park,

Songbai Road, Baimang, Xili, Nanshan, Shenzhen,China

86-755-27353188

http://www.cem-meter.com.cn

http://www.cem-instruments.com

cemyjm@cem-meter.com.cn

C. HANNA instruments®, Inc.
584 Park East Drive
Woonsocket, RI 02895
Phone: 800.426.6287 • 401.765.7500
Fax: 401.765.7575
General Sales: sales@hannainst.com
Technical Support: tech@hannainst.com
Customer Service: custsvc@hannainst.com

D. Cables To Go
3555 Kettering Blvd
Moraine, OH 45439

937-224-8646
Monday through Friday
8:30 a.m. to 6 p.m. EST

http://www.cablestogo.com/product.asp?cat_id=1521&sku=29597&st=TruLink%20Wireless%20USB%20Superbooster%20Extender%20Kit

E. All Fish and Plants will be provided by Virginia Tech. University.

2.01 PRODUCTS

A. DP-CalP80
1. Water pump rated at 80 Gallons per hour.
2. Freshwater/saltwater.
3. 115V, 60Hz motor.
4. Integrated suction cup supports.
5. 6' power cord.

B. USB NetPower 8800
1. Network power controller for controlling the on/off power for connected units.

C. CEM DT-1309:
1. Light meter that sends data via USB
2. Determines if plants have efficient sunlight/light.

D. HI 2550 Bench Meter
1. Measures:
   a. pH
   b. ORP
   c. Conductivity
   d. TDS
   e. NaCl percentage
   f. Temperature
2. Sends data via USB and has 12V power adapter.

E. TruLink® Wireless USB Superbooster Extender Kit:
   1. Extends USB data to connection to computer.
   2. Does not need "line of sight".
   3. Access USB device in another room up to 150 feet away.

F. Piping: Made from natural material like bamboo and will help connect trays together and will allow water to flow through. Interior will be Lined with PVC
   1. 2" diameter
      a. Plant trays connections
      b. grey water tray
      c. water tanks
   2. 1" diameter
      a. Connects from pump to next tank

G. Fish:
   1. Tilapia

H. Plants:
   1. Areca
   2. Palm
   3. Mother-in-law's Tongue
   4. Money Plant
   5. Bamboo/
   6. Taro

I. Rocks:
   1. Black, crushed rock or cobblestone.

PART 3 – EXECUTION

3.1 INSTALLATION

D. Gray water pump hall be installed per manufacturer's recommendations. The pump is located in the 500 gallon gray water tank. This pump is to circulate water from the wetlands to the 500 gallon tank and control bacteria growth.

E. The aquaponics pump should be located in water tanks to pump water up to the filter tray and allow for fish nutrients to flow up to the plants in the upper tier. Make sure water level is above the water pump before starting up the device.
   1. Pump location: The pump should be located in the same tank as the fish. These tanks are located in three places: at the end of the aquaponics water cycle indoor and outdoor. Due to its compact design, the pump does not take up much space and is easy to install.

F. USB Net power 8800: Before connection with pumps, install software for the USB Net Power 8800 and make sure that there is communication between the USB Net Power 8800. Timing of turning on and off pumps will be scheduled via software. All Pumps are connected to the USB Net Power 8800 for proper on/off scheduling.
   1. USB Net Power 8800 should be located in the outlet nearest to the aquaponics system.

G. pH/TDS/Temp Sensors should be mounted in a covered area free from moisture and weather, to measure the outdoor water quality of the fish and plants. Cables will be linked from sensors to the computer via Trulink wireless USB. Installed Software and Drivers in accordance with the Manufacturers user manual. Data collection software will be created by the Hawaii Solar Decathlon Team. USB Net Power 8800 will be connected to control the power to the device via USB to a computer.
   1. Sensors location: The Hanna pH/TDS/Temp sensors will be mounted in a safe dry place box free from direct rainfall and installed under the aquaponics plant tray. From the Hanna sensor, USB will be connected to Trulink and Power will be connected to USB Net Power 8800. This box should be weather deterrent and UL listed.

H. CEM Light Sensor will be installed indoors to make check if there is adequate lighting indoor. This sensor will be placed by the Aquaponics plant tray.
   a. This is a portable handheld device so it can be placed anywhere to collect plant light data.

I. Tanks/Rocks/Fish/Plants: Once all sensors are installed then the tank can be assembled. We will fill the tank with water up to half capacity and have the team assemble the system according to drawings. The gravel (rocks) will be located in the plant tray compartments and the wetland area. The plants will be place in the appropriate area – wetland plants in their area (taro) and aquaponics plants in their designated area. All water will be tested before its safe for fish to be added.

3.2 TESTING

A. USB Net Power – once the device is configured via USB to the computer, plug in a device and check to see if the device turns on or off properly.

B. Both CEM and Hanna sensors should be installed into the computer directly before using the Trulink Wireless USB. Once connection is established, install the Trulink Wireless USB and make sure to have connectivity with the Trulink wireless USB, if not refer to Trulink Wireless USB user manual for troubleshooting. Similar Testing will be done on the power side. USB Net Power 8800 will be set up and configured and tested with a device attached to it to show proper on/off capability.

C. Water will be checked with handheld sensors (pH and Temp) before fish will be added.
   1. The recommended water temperature for tilapia is 28-30 degrees C (82-86 degrees F). The growth rate will decrease dramatically if the water is colder than 20 degrees C (50 degrees F) and fish will normally start dying at roughly 10 degrees C (50 degrees F). It is also important to remember that cold water will affect the immune system of the fish and make it more prone to ill health. A water temperature below 13 degrees C (55 degrees F) is therefore never advisable. Temperatures above 45 degrees C are also not advisable conditions.
   2. pH levels should be between 6.8 to 8.0 before adding in any fish.

END OF SECTION

DIVISION 41 MATERIAL PROCESSING AND HANDLING EQUIPMENT

SECTION 41 22 00
CRANES AND HOISTS

PART 1 – GENERAL

1.01 SUMMARY

A. Section includes the following:

1. Mobile Crane

1.02 SUBMITTALS

A. Link to manufacturer's published data sheet, including:

1. Product details

2. Dimensions and measurements http://www.fields-international.com/mobile-cranes.php

1.03 DELIVERY, STORAGE AND HANDLING

A. Acceptance at site:

1. Inspect product upon delivery. Report any damaged or missing components directly to the manufacturer.

2. Provide appropriate matting material beneath crane feet to comply with required load factors.

PART 2 – PRODUCTS

2.01 MANUFACTURERS

A. C.A. Fields International Limited
14 Cavendish Avenue
Sheffield S17 3NJ UK
Tel: +44 (0)114 235 0103
Fax: +44 (0)114 236 2815
Email: fields.international@mirai.co.uk
www.fields-international.com

2.02 PRODUCTS

A. Grove AT635 All Terrain Crane

1. Maximum lifting capacity: 60,000 lbs
2. Main boom: 30.0 m
3. Swingaway Fly: 13.01m

PART 3 – EXECUTION

3.01 OPERATION

A. Assumed dry weight of assembly to be lifted is 5330 lbs per module.
   1. Add 10% on top of this with equipment installed in subfloor cavity and any items place outside of the shell.

B. Assumed Swingaway Fly of 13.01m.

END OF SECTION

SECTION 41 62 23
FORKLIFT TRUCKS

PART 1 – GENERAL

1.01 SUMMARY

B. Section includes the following:
2. Mobile Telehander

1.02 SUBMITTALS

B. Link to manufacturer's published data sheet, including:
3. Product details
4. Dimensions and measurements
http://www.goldcoasthilift.com/equipment_pdf_library/Gradall_544D10-55_Telehandler_Product_Brochure.pdf

1.03 DELIVERY, STORAGE AND HANDLING

B. Acceptance at site:
3. Inspect product upon delivery. Report any damaged or missing components directly to the manufacturer.
4. Provide appropriate matting material beneath crane feet to comply with required load factors.

PART 2 – PRODUCTS

2.1 MANUFACTURERS

B. JLG Industries, Inc.
1 JLG Drive
McConnellsburg, PA 17233-9533
Telephone 717-485-5161
Toll-free in US 877-JLG-LIFT
Fax 717-485-6417
www.jlg.com

2.02 PRODUCTS

B. Gradall Model 544d10-55 Telehandler

4. Maximum lifting capacity: 5,000 lb. at 55 feet.
5. Maximum reach: 2,500 lb at 42 feet.
6. Lattice jib: 18 feet- 230 feet.
7. Engine/output: John Deere 4-cylinder, turbo-Diesel, 125 hp
8. Turning Radius: 175 in.

9. Travel speed: 19 mph
10. Operational Weight: 33,570 lbs.

PART 3 – EXECUTION

3.1 OPERATION

C. Assumed weight of assemble not to exceed maximum lifting capabilities
D. Assumed a minimum turning radius of 175 in.

END OF SECTION

SECTION 41 65 16
MOBILE GENERATORS

PART 1 – GENERAL

1.01 SUMMARY

A. Section includes the following: Mobile generator.

1.02 SUBMITTALS

A. Link to manufacturer's published data sheet, including:

1. Product details
2. Dimensions and measurements
http://www.hondapowerequipment.com/products/modeldetail.aspx?page=modeldetail&section=P2GG&modelname=EU2000i&modelid=EU2000IKN

1.03 DELIVERY, STORAGE AND HANDLING

A. Acceptance at site:

1. Inspect product upon delivery. Report any damaged or missing components directly to the manufacturer.

B. Packing, Shipping, Handling and Unloading:

1. Store product in manufacturer's packaging until ready for installation.

C. Storage and Protection:

1. Store packed product in a safe location as designated by the construction coordinator.

PART 2 – PRODUCTS

2.01 MANUFACTURER

A. American Honda Power Equipment Division
4900 Marconi Dr.
Alpharetta, GA 30005-8847
Phone: +1 770 497 6400
Website: http://www.hondapowerequipment.com

2.02 PRODUCTS

A. Honda Generator Model # EU3000iS

1. Engine: Honda GX 200
2. Displacement: 196 cc
3. AC Output: 120V/3000W max. (25A) 2,800 W rated (23.3A)
4. Receptacles: 20A 125V Duplex, 30 A 125V Locking Plug
5. DC Output: 12V, 144W (12A)
6. Starting system: recoil, electric
7. Fuel Tank Capacity: 3.4 gals
8. Run time per Tank full: 7.2 hrs. @ rated load, 20 hrs. @ ¼ load
9. Dimensions: L 25.8" x W 18.9 x H 22.4"
10. Noise level: 49 to 58 dB, 49 dB @ ¼ load, 58 dB @ rated load
11. Dry weight: 134 lbs.
12. Residential Warranty: 3 years

PART 3 – EXECUTION

3. 01 INSTALLATION

A. Refer to manufacturer's published installation instructions for detailed installation description.

END OF SECTION

Appendix A – Structural Calculations

The following pages have been submitted and stamp by the structural firm of ARUP.

SOLAR DECATHLON
TEAM HAWAII

STRUCTURAL CALCULATIONS

Prepared by Arup
March 22, 2011

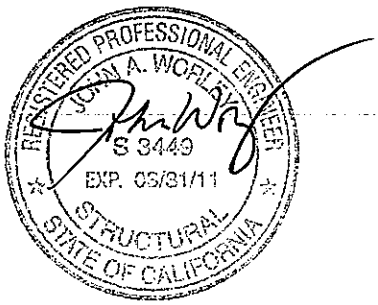

STRUCTURAL CALCULATIONS
TABLE OF CONTENTS

100% CD Issue
March 22, 2011

1.0 General

2.0 Design Loads

- 2.1 Gravity Loads
- 2.2 Wind Loads

3.0 Global Behavior

- 3.1 Overturning Stability and Ground Interface
- 3.2 Displacements

4.0 Shell Structure

- 4.1 Analysis Model
- 4.2 Element Design

5.0 Substructure

- 5.1 Cradle Beam
- 5.2 Struts

6.0 Auxiliary Structures

- 6.1 Solar Panel Support Structure

Structural Narrative

1 Introduction

These calculations verify the structural performance of the Team Hawaii into the 2011 Solar Decathlon. The Team Hawaii structure consists of four basic components: A shell structure, a substructure and two auxiliary structures. Each component is described in more detail below.

This narrative also outlines the structural design criteria and material specifications, which follow the structural description.

2 Description of the Structure

See figures on following pages to illustrate the structures described below.

2.1 Shell Structure

The primary residential volume is contained by the shell structure. This consists of a tube, nearly oval in cross section, projected in one dimension by a series of parallel structural ribs. The ribs are sandwiched by interior and exterior layers of fiber-reinforced polymer (FRP). The FRP is adhered to each of the ribs, and as such will contribute to the stiffness and strength of the structure; however, the structure is designed to be stable without the aid of this material.

The structure is divided into modules and half-modules for shipping and field assembly. A typical module is a 7'-6" long segment of the tube supported by six ribs at 18-inch spacing. Each rib acts much like a channel section to resist bending and axial forces. The web of the channel is plywood, and the flanges are built-up curved steel angles bolted at intervals to the plywood. The vertical legs of the interior and exterior angles do not contact one another in order to minimize thermal bridging through the shell section. The outer two ribs of each module are called the primary ribs, and are stiffened by an additional steel plate. These are the ribs that carry all loads to the supporting substructure.

Between ribs are blocking and cable elements. The blocking serves to prevent buckling of the rib elements, to enable forces to be shared by ribs, to transfer forces from secondary to primary ribs, and also to act as fire blocking. Cables exist in both horizontal and vertical orientations to carry wind forces and gravity forces, respectively. Cables work with adjacent blocking elements to form trusses spanning from primary rib to primary rib.

Each module is divided into an upper and a lower half, with a horizontal splice through all ribs at roughly mid-height of the shell. The primary and secondary ribs are spliced differently. The primary ribs are spliced with a bolted splice plate designed to carry all loading across the joint. The secondary

ribs are spliced so as to transfer downward forces (primarily gravity) and horizontal forces (wind and gravity thrust) but not wind uplift. This connection is intended to be installed without the need to access the inside of the shell area.

Modules are connected to one another by a line of bolts around the inside perimeter of the primary rib stiffener plates. Though each module is designed to be essentially self-stable, the connection between modules enables the whole to work together and add redundancy.

Inside the shell is a double floor structure: the lower floor to support service equipment and water supply, and the upper to serve as the walking surface. Each floor is supported by steel tee joists that span between primary ribs to prevent loading of the secondary ribs.

2.2 Substructure

The substructure is an independently stable steel frame that adjusts to the ground topography to create a level and uniform point of attachment for shell modules. The substructure consists of the following three components: cradle beams, struts/braces and base units.

Cradle beams are built-up curved steel tee sections that conform to the contour of the lower half of the shell structure. Primary ribs from two adjacent shell modules are joined to each cradle beam.

Struts and braces are standard steel pipe sections that serve to restrain cradle beams against buckling and to transfer vertical and lateral forces to the base units. These elements are connected by simple bolted connections at each end.

Each base unit consists of a base plate and a jacking mechanism. The base plate is a thin but stiffened circular steel plate with a series of threaded rods that penetrate the ground up to the 18 inches permitted by the competition rules. Though the structure is stable against overturning due to its geometry and self weight, the rods provide additional uplift resistance and augment base friction to resist sliding. The jacking mechanism is a vertical threaded rod with wing nut to allow easy vertical adjustment for deviations in ground elevation.

Isometric View

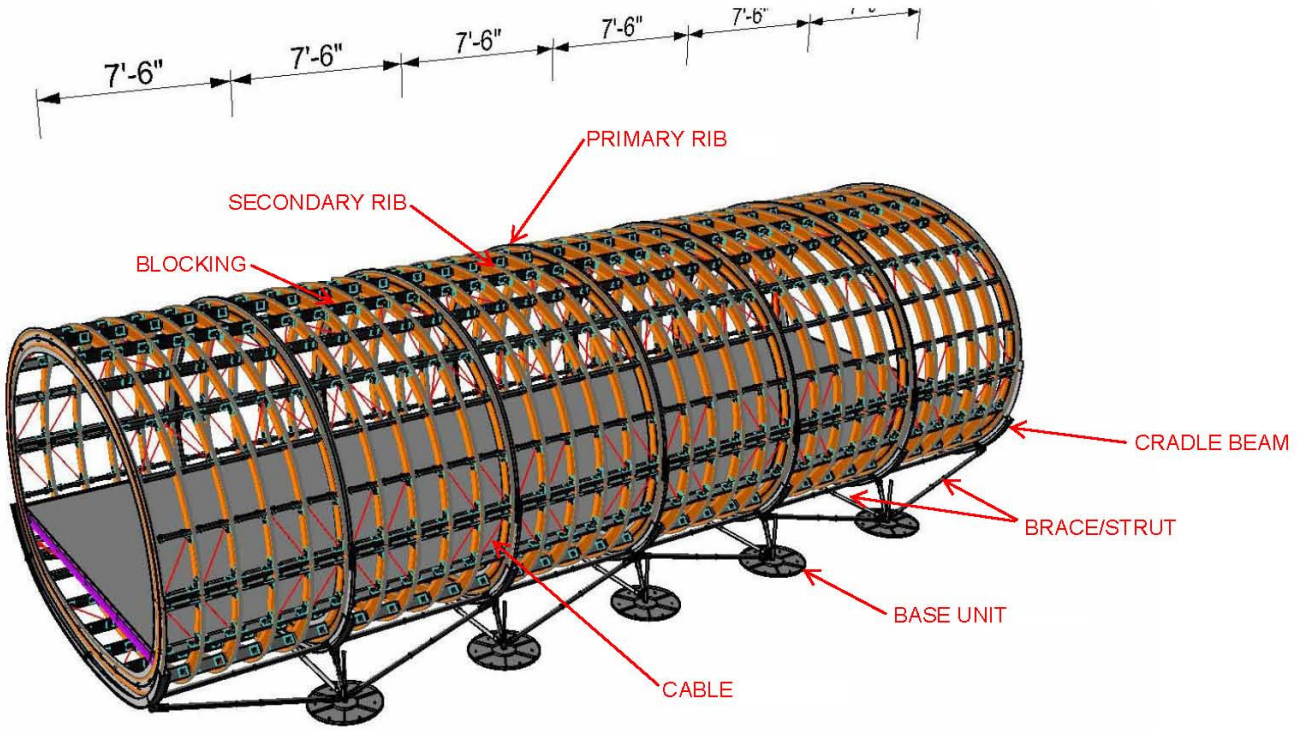

Section View

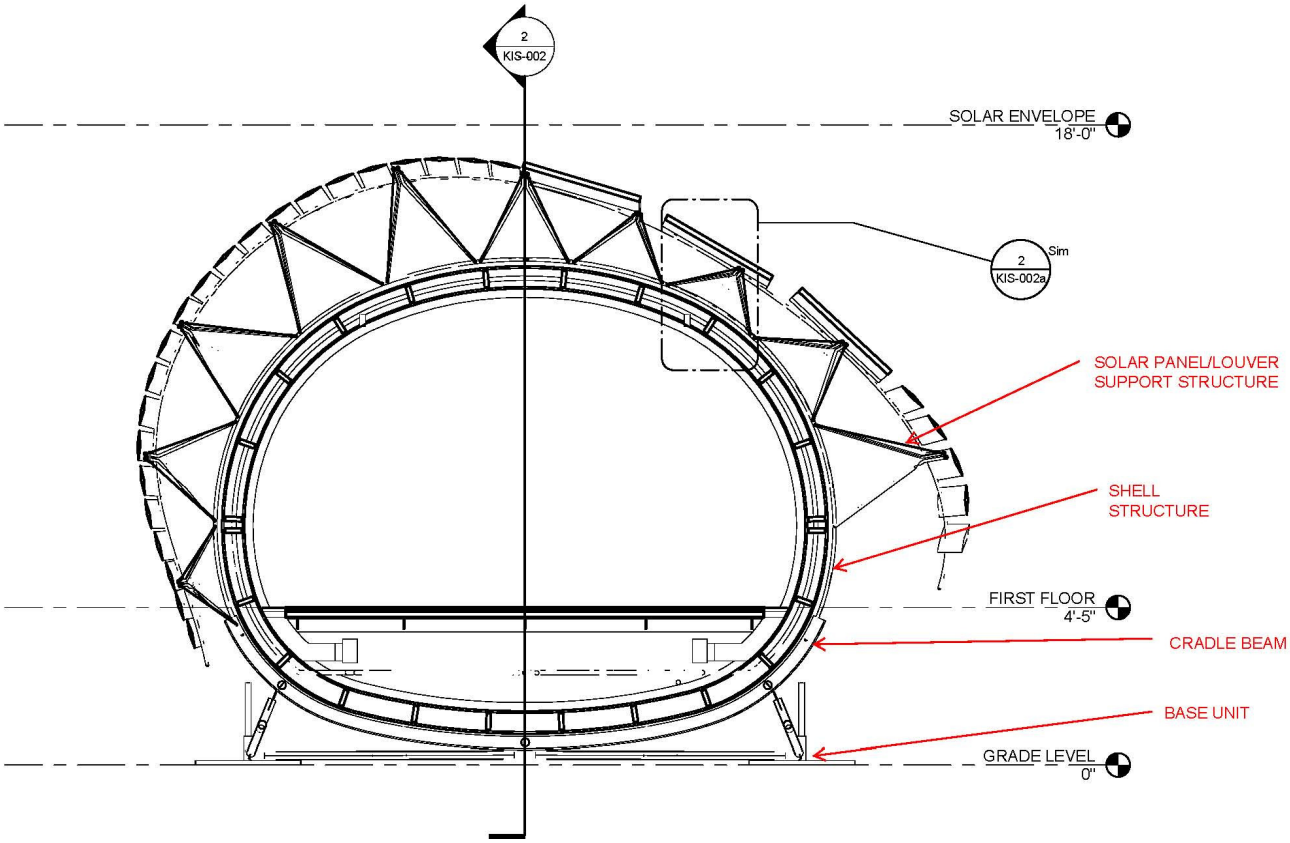

2.3 Auxiliary Structures

The two auxiliary structures are the approach ramp and the solar panel support structure. The approach ramp is a simple steel structure composed of steel angle joists, channel beams and pipe columns and braces. Base legs are supported on jacking mechanisms similar to that for the substructure.

Attached to each shell module is a lightweight steel truss frame supporting an undulating array of louvers and solar panels. The structure consists of standard pipe sections. It is meant to be attached without needing to access the top of the shell.

2.4 Construction Sequence

The following construction sequence is foreseen:

1. Prefabrication of shell half-modules and solar panel support structure.
2. On site, erection of substructure frame and adjust base units to level.
3. Lowering of each lower half-module onto the cradle beams by crane, and bolting into place.
4. Lowering of upper half-modules onto lower half-modules by crane.
5. Installation of bolts to connect modules to one another and to splice upper to lower halves.
6. Installation of mechanical, electrical and plumbing equipment to lower floor, followed by installation of walking floor and finishes.

3 Structural Design Criteria

3.1 Building Code

Structural design is in accordance with the 2009 International Building Code (IBC), as modified by the Solar Decathlon Building Code, dated March 26, 2010.

3.2 Loading

3.2.1 Dead Loads

Dead loads are based on actual weight of the structure, solar panels and equipment, with the following limitations:

- No single piece of equipment shall exceed 13,000 lb. operating weight.
- Solar panels, including their aluminum frames, and louvers shall not exceed 3 psf unit weight.

3.2.2 Live Loads

The following live loads are assumed:

- Typical residential floor live load: 40 psf

- Live load on approach ramp: 100 psf
- Live load on roof: 20 psf

3.2.3 Wind Loads

The following wind load parameters are used:

- Design wind speed: 60 mph
- Importance factor (Iw): 1.0
- Exposure category: C

3.2.4 Seismic Load

No seismic load is considered for this installation, given its short duration and its location of low seismic risk.

3.3 Foundation Design Criteria

The following parameters are used in verifying the interface of the structure with the ground:

- Allowable soil bearing: 1500 psf
- Coefficient of friction for sliding resistance: 0.25
- Overturning factor of safety: 2.0

4 Material and Construction Specifications

4.1 Structural Plywood

1. Material shall conform to "Softwood Plywood-Construction and Industrial," Product Standard PS 1-83 of U.S. Department of Commerce, Bureau of Standards.
2. Fire treatment per the following standard: "Plywood - Fire Retardant Treatment by Pressure Process" (AWPA C27-74).
3. Plywood shall be manufactured in accordance with American Plywood Association standards with each sheet grade marked.
4. All plywood shall have a minimum of 5 plies.
5. Plywood shall be C-D Structural I with exterior glue and shall be ½-inch thick minimum. Where plywood thickness is built up from multiple sheets, adjacent sheets shall be glued together.

6. Holes for bolts shall not be more than 1/16-inch larger than bolt diameter, unless noted otherwise.

4.2 Structural Steel Work

1. Structural steel shapes and plates shall conform to ASTM A36. Steel pipe sections shall conform to ASTM A53 Type E or S (welded or seamless), Grade B (Fy = 35ksi) or ASTM A501 (Fy = 35ksi).
2. Threaded rod shall conform to ASTM A36.
3. Structural steel shall be fabricated in accordance with AISC Specifications, AISC Code of Standard Practice, and AWS D1.1.
4. Bolt holes shall be drilled or punched at right angles to the surface of the metal. Bolt holes shall not be more than 1/16-inch larger than bolt diameter, unless noted otherwise.
5. Interior primer paint:
    a. SSPC Paint Specification No. 13; conforming to federal, state, and local VOC regulators; containing no lead or chromates.
    b. After fabrication, prepare steel surfaces to receive interior primer in accordance with the SSPC-SP3 “Power Tool Cleaning”.
    c. Apply interior primer at 2.0 mils minimum dry film thickness.
6. Exterior primer paint:
    a. SSPC Paint Specification No. 20 zinc-rich primer.
    b. After fabrication, prepare steel surfaces to receive exterior primer in accordance with the SSPC-SP6 “Commercial Blast Cleaning”.
    c. Apply exterior primer at 3.0 mils minimum dry film thickness.
7. All steel surfaces shall be cleaned per SSPC-SP1 “Solvent Cleaning” to remove oil and grease prior to any other surface preparation. Ease all corners of plates and shapes to receive exterior primer to 1/16-inch minimum chamfer.

4.3 Structural Bolting

1. Typical bolts shall conform to ASTM A307, Grade A regular low-carbon steel bolts and nuts. Provide hexagonal head bolt heads and self-locking nuts.
2. Where specified in drawings, ASTM A325 bolts shall be used. Provide hexagonal head bolt heads and self-locking nuts.
3. Bolts, nuts and washers to be exposed to the elements in the final structure shall be hot-dip galvanized. Galvanize bolts, nuts and washers in accordance with ASTM A153. Touch up galvanized surfaces in accordance with ASTM A780.

4. Bolts shall be brought to a snug tight condition.
5. Bolts shall be of a length that will extend entirely through but not more that ¼-inch beyond the nut. Washers shall be used on all bolts.

4.4 Structural Welding

1. All welding shall Comply with AISC Specifications and AWS D1.1.
2. Welding Material: Filler metal requirements shall conform to AWS D1.1 and AISC "Specification for Structural Steel Buildings". Minimum classified tensile strength of 70 ksi (E70). Use low hydrogen electrodes as defined by AWS D1.1.

4.5 Structural Cable

1. Structural cable shall be 7x19 cable conforming to American standard "MIL-W-1511A galvanized aircraft cable."
2. Cable end connections shall develop the full breaking strength of the cable.
3. Thimbles shall be installed at all 180-degree bends. The cable shall be clipped to itself immediately beyond the thimble.
4. Where cables are clipped, the dead end shall be clipped to the live end by at least two clips, and shall overlap by at least 4 ¾", or as required by the clip manufacturer.
5. Cable end splices shall use at least four clips and include an overlap of at least 9 ½", or as required by the clip manufacturer.

ARUP

Job No.	Sheet No.	Rev.
214081	2.1-1	

Member-Location

Job Title: Solar Decathlon

Drg. Ref.

Made By: BT Date: 3/22/11 Chd.

GRAVITY LOADING

TYP RIB LOADING

- Gravity:

Desc.	plf
Self wt. ribs	auto-calc. (approx. 10 plf)
FRP: $(155\,pcf)\left(\frac{5/16''}{12}\right) = 4.0\,psf$	6.1
Misc. allowance = 10 psf	15.0
	21 plf + self wt.

LL = 20 psf : 30 plf typ. rib

- Wind: elements & components

Condition	plf
Wall, windward (7.9 psf)	12
Wall, leeward (8.5 psf)	13
Roof, upward (13.2 psf)	20

ARUP

Job No.	Sheet No.	Rev.
	21-2	
Member-Location		
Job Title	Drg. Ref.	
	Made By	Date	Chd.

SPECIAL DEAD LOADS

Item	Weight (#)
1500 gal water tank	12,500

ARUP

Job No.	Sheet No.	Rev.
214081	2.2-1	
Member-Location		
Drg. Ref.		
Made By BT	Date 3/22/11	Chd.

Job Title Solar Decathlon

WIND LOADING

PRIMARY STRUCTURE

$K_d = 0.85$

$I_w = 1.0$

$V = 60$ mph

$K_h = K_z = 0.90$

$K_{zt} = 1.0$

$G = 0.85$

$GC_{pi} = \pm 0.18$ (cancels out except roof loading)

$q_z = 7.05$ psf $= q_h$

Assume roof slope 0-5°

Condition	GC_{pf}	p (+internal)	p (- internal)	
Windward wall, main	0.40	1.55	4.09	
Roof uplift, main	-0.69	-6.13	-3.60	
Leeward wall, main	-0.29	-3.31	-0.78	
Transverse wall,	-0.45	-1.90	-4.44	
Windward wall, edge	0.61	3.03	5.57	$z_a = 6'$
Roof uplift, edge	-1.07	-8.81	-6.27	$z_a = 6'$
Leeward wall, edge	-0.43	-4.30	-1.76	$z_a = 6'$

ARUP

Job No.	Sheet No.	Rev.
	2.2-2	

Member-Location

Job Title

Drg. Ref.

Made By | Date | Chd.

COMPONENTS & CLADDING

$k_d = 0.85$

$I_w = 1.0$

$V = 60$ mph

$k_h = k_z = 0.90$

$k_{zt} = 1.0$

$G = 0.85$ ("rigid" structure)

$GC_{pi} = \pm 0.18$

Wind Area $\approx 12' \times 1.5' = 18$ sf $\rightarrow$ say 10 sf

Desc.	GCp	
Wall, windward	1.0	
Wall main, leeward	-1.1	
Wall corner, leeward	-1.4	(within $0.4h = 6'$)
Roof downward	+0.2	
Roof main, upward	-1.0	
Roof edge, upward	-1.8	within 6'
Roof corner, upward	-2.8	within 6'

$q_z = 7.05$ psf

ARUP

Job No.	Sheet No.	Rev.
	2-2-3	

Member-Location

Job Title

Drg. Ref.

Made By | Date | Chd.

Condition	$p = q_z(GC_p - GC_{pi})$
Wall, windward	8.4 psf
Wall main, leeward	-9.0 psf
Wall corner, leeward	-11.1 psf
Roof downward	2.6 psf
Roof main, upward	-8.4 psf
Roof edge, upward	-14.0 psf
Roof corner, upward	-21.0 psf

ARUP

Job No.	Sheet No.	Rev.
214081	3.1-1	

Member-Location

Job Title: Solar Decathlon

Drg. Ref.

Made By: BT Date: 3/22/11 Chd.

GLOBAL STABILITY CHECKS

- For transverse wind, complete structure

LOADING

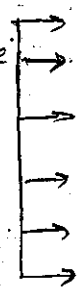

- Horizontal wind:

$F_{1w} = (3.03 + 4.30)(6') + (1.55 + 3.31)(39') = 234$ plf

- Wind uplift:

$F_{2w} = (8.81\,psf)(6') + (6.13\,psf)(39') = 291\,plf$

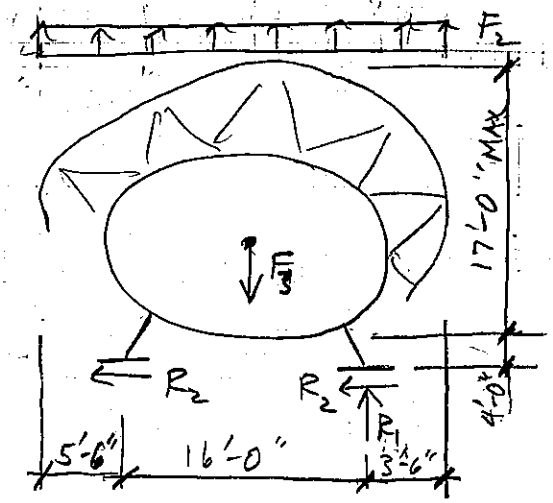

- Dead load:

$F_{3D} = (20\,psf)(45')(45') = 40{,}500$ #

(45' = length of structure; 45' = circumference)

20 psf = 6 psf ribs + 4 psf FRP + 10 psf floor, solar panels & equip.

OVERTURNING STABILITY

- Check that factor of safety against overturning ≥ 2
- Assume no uplift resistance
- Forces used to compute OTM & RM are unfactored:

$OTM = F_1(17')(12.5') + \frac{1}{2}F_2(21.5')^2 = 116{,}982$ #-ft.

$RM = \frac{1}{2}F_2(3.5)^2 + F_3(8') = 325{,}782$ #-ft.

$\boxed{\frac{OTM}{RM} = 2.8}$ OK

ARUP

Job No.	Sheet No.	Rev.
	3.1-2	
Member-Location		
Job Title	Drg. Ref.	
	Made By	Date	Chd.

SOIL BEARING

- Bearing, wind condition:

  $R_1 = F_3 - F_2(25') = 33{,}225^{\#}$

  shared by 5 base plates: 6645 #/plate

- Bearing, gravity condition at end bay:

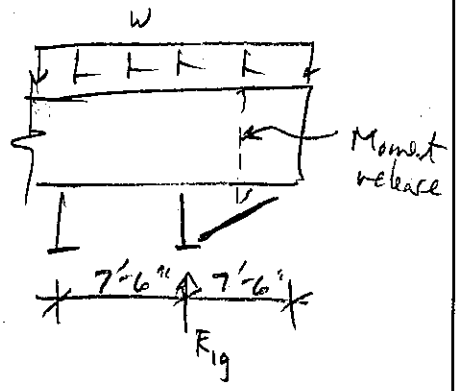

  $w_D = (20\,psf)(45') = 900\ plf$

  $w_L = (20\,psf + 40\,psf)(16') = 960\ plf$

  $R_{1g} = w\left(\frac{7.5'}{2}\right) + w(1.5)(7.5') + \frac{1}{2}w\left(\frac{7.5'}{2}\right)^2 / 7.5'$

  $= 16{,}875\,w$

  $R_{(D+L)} = 31{,}387^{\#}$

  shared by 2 base plates: 15,700 #/plate

- Bearing, gravity condition at interior bay:

  $R_{1g} = w(7.5') + (\frac{1}{2})\,2{,}500^{\#}$ water tank $= 29{,}200^{\#}$

  shared by 2 plates: 10,100 #/plate

- Allowable bearing 1500 psf:

  ℞ area $\geq 10.5\ ft^2$ @ end bay (3'-8" ϕ)

  $\geq 6.7\ ft^2$ @ interior bay (3'-0" ϕ)

ARUP

Job No.	Sheet No.	Rev.
	3.1-3	
Member-Location		
Job Title	Drg. Ref.	
	Made By	Date	Chd.

SLIDING RESISTANCE

- wind reaction:

$R_2 = \frac{1}{2} F_2 (17') = 2474\#$

shared by 5 pairs of base plates : 495 #/plate

- Assume coefficient of friction = 0.25

sliding resistance = $0.25 P_D$

$P_D = (20psf)(45')(17.5')/2 = 3375\#$

$\boxed{\text{sliding factor of safety} = \frac{844}{495} = 1.7}$

OK

ARUP

UH Solar Decathlon
General Analysis
Typical Module

Job No.	Sheet No.	Rev.
214081	3.2-1	
Drg. Ref.		
Made by	Date 14-Feb-2011	Checked

Scale: 1:38.98
Deformation magnification: 25.00
Translation, Uz: 0.5000 in/pic.cm
Output axis: global

- 0.05000 in
- 0.0 in
- -0.05000 in
- -0.1000 in
- -0.1500 in
- -0.2000 in
- -0.2500 in
- -0.3000 in

Case: A5 : Analysis Case 5

(D + L)

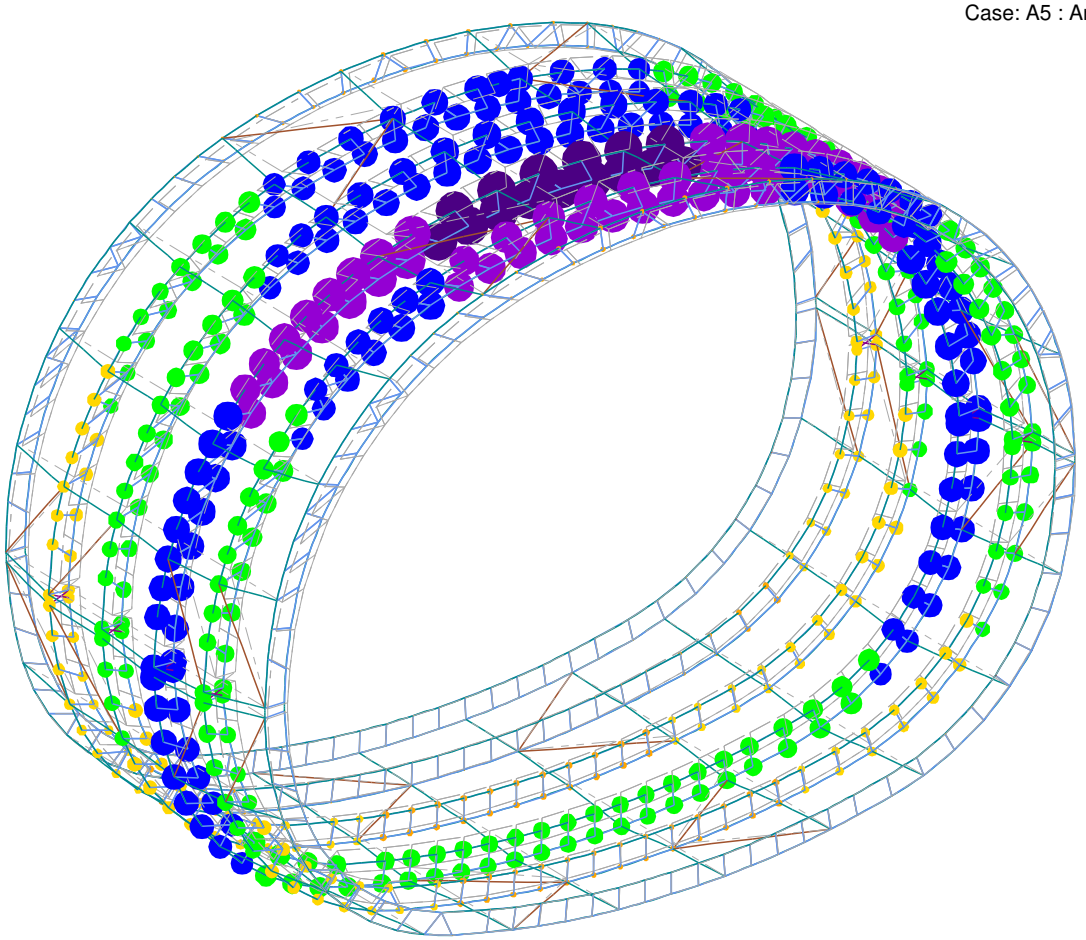

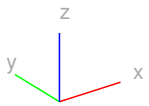

ARUP

UH Solar Decathlon
General Analysis
Typical Module

Job No.	Sheet No.	Rev.
214081	3.2-2	
Drg. Ref.		
Made by	Date 14-Feb-2011	Checked

Scale: 1:38.98
Deformation magnification: 50.00
Translation, Ux: 0.2000 in/pic.cm
Output axis: global

- 0.1250 in
- 0.1000 in
- 0.07500 in
- 0.05000 in
- 0.02500 in
- 0.0 in
- -0.02500 in
- -0.05000 in

Case: A7 : Analysis Case 7

(D+.75L+.75W)

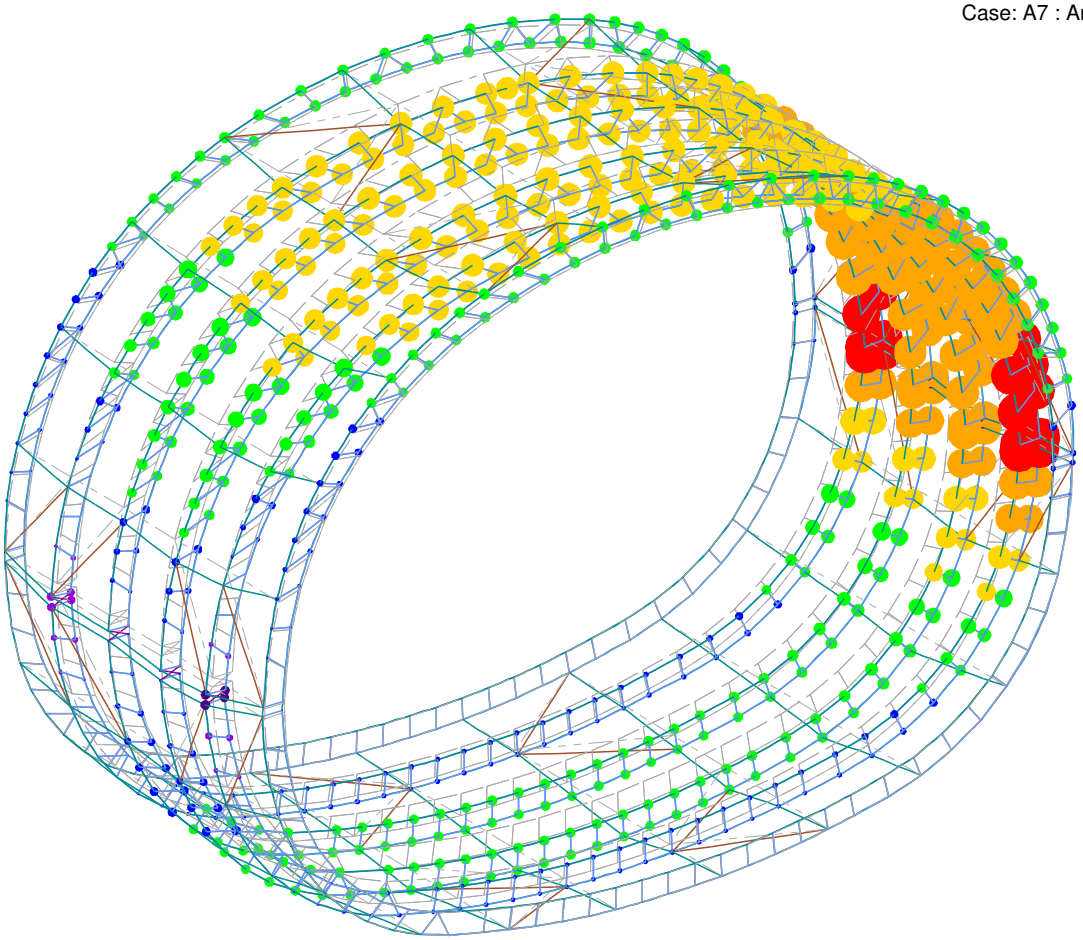

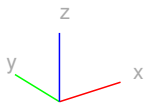

ARUP

UH Solar Decathlon
General Analysis
Typical Module

Job No.	Sheet No.	Rev.
214081	4.1-1	
Drg. Ref.		
Made by	Date 14-Feb-2011	Checked

Scale: 1:39.49

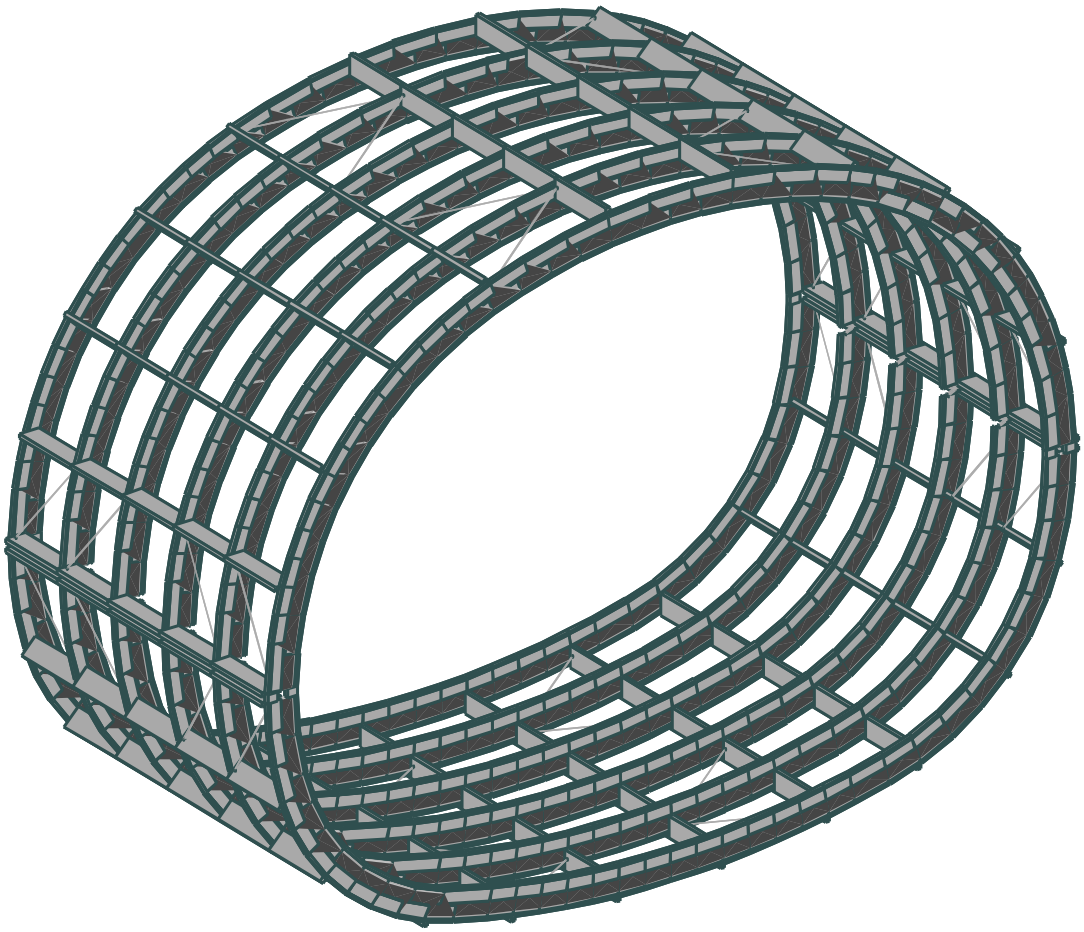

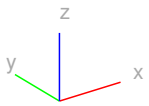

ARUP

Job No.	Sheet No.	Rev.
21408	4.1-2	

Member-Location

Job Title: Solar Decathlon

Drg. Ref.

Made By: BT Date: 3/22/11 Chd.

MODEL COMPONENTS

RIB GEOMETRY

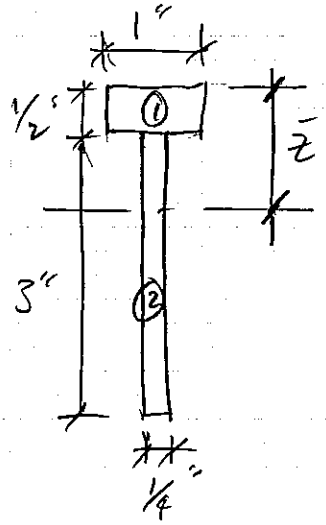

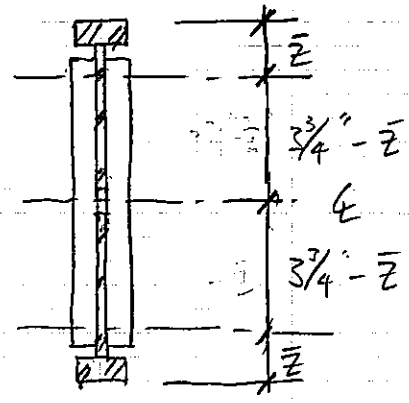

$$\bar{z} = \frac{A_1 z_1 + A_2 z_2}{A_1 + A_2}$$

$A_1 = 0.5\ in^2$

$A_2 = 0.75\ in^2$

$z_1 = 0.25''$

$z_2 = 2''$

$\bar{z} = 1.3''$

$3\frac{3}{4}'' - \bar{z} = 2.45''$

ARUP

Job No.	Sheet No.	Rev.
	4.1-3	
Member-Location		
Job Title	Drg. Ref.	
	Made By	Date	Chd.

MATERIAL PROPERTIES

- Per IBC Table 2305.2.2(2):

$Gt = 41,500$ lb/in.

$t = 1'' \rightarrow G = 41.5$ ksi

Titles and Model Statistics

```
Job number:              214081
Job title:               UH Solar Decathlon
Subtitle:                General Analysis
Calc. heading:           Typical Module
File:                    J:\214081\4 Internal Project Data\4-04
                         Calculations\Struct\sduh-a01.gwb
Notes:                   (none)
Structure Type:          Space
Invalid Directions:      (none)
Global Directions:       (none)

Number of nodes:              907
Highest node:                 910
Number of elements:          1545
Highest element:             1589
Number of members:              0
Highest member:                 0
Number of load cases:           4
Highest load case:              4
```

Load Case Titles

Case	Name	Type
L1	self wt	undefined
L2	super dead	undefined
L3	live	undefined
L4	wind	undefined

Environmental Impact Summary

The reported recycled content is the 'total volume of recycled content / total volume of material in the structure'.
Other reported values are environmental impact totals for all elements in the structure.

	eE [in.lbf]	eCO2 [kip.s²/in]	%RC [%]	User
per Section Property				
1 outer T	119.9	0.005610	43.00	0.0
2 inner T	113.5	0.005313	43.00	0.0
4 blkg	5.527	353.0E-6	0.0	0.0
6 cable	2.723	127.4E-6	43.00	0.0
8 bolt strut	1.049	49.08E-6	43.00	0.0
10 splice plate	1.310	61.32E-6	43.00	0.0
per 2D Element Property				
1 plywood 1	8.420	537.8E-6	0.0	0.0
per Material Property				
std. Steel	235.8	0.01103	43.00	0.0
1 plywood	13.95	890.9E-6	0.0	0.0
2 cable steel	2.723	127.4E-6	43.00	0.0
Total for structure				
	252.4	0.01205	10.29	0.0

Analysis Details

Analysis Task 1

```
Name:           Static
Solver:         GSS 40.3.0.14 Static (non-linear elements)
Status:         post-analysis (Analysed: Monday, February 14, 2011)

Advanced:

    Solution method:                          Sparse Direct
    Degree of freedom ordering:               Minimum degree
                                              ordering
    Limiting minimum:maximum stiffness ratio:        100.0E-12
    Minimum stiffness distinguished from zero:             0.0
```

```
    Include residual check:                    Yes
    Plate formulation:                         Mindlin
    Geometry based automatic constraints

    Flatness parameter:                              0.001000
    Zero stiffness value:                          100.0E-12
    Treat geometry check failures as:          Errors
```

Analysis Cases

Case	Name	Description	Error norm
A1	self wt	L1	not calculated
A2	super dead	L2	not calculated
A3	live	L3	not calculated
A4	wind	L4	not calculated

Analysis Task 2

```
Name:           D+L
Solver:         GSS 40.3.0.14 Static (non-linear elements)
Status:         post-analysis (Analysed: Monday, February 14, 2011)

Advanced:

    Solution method:                           Active Column
    Front vector:                              (0.0, 0.0, 0.0)
    Limiting minimum:maximum stiffness ratio:        100.0E-12
    Minimum stiffness distinguished from zero:             0.0
    Include residual check:                    Yes
    Plate formulation:                         Mindlin
    Geometry based automatic constraints

    Flatness parameter:                              0.001000
    Zero stiffness value:                          100.0E-12
    Treat geometry check failures as:          Errors
```

Analysis Cases

Case	Name	Description	Error norm
A5	Analysis Case 5	L1 + L2 + L3	not calculated

Analysis Task 3

```
Name:           D+W
Solver:         GSS 40.3.0.14 Static (non-linear elements)
Status:         post-analysis (Analysed: Monday, February 14, 2011)

Advanced:

    Solution method:                           Active Column
    Front vector:                              (0.0, 0.0, 0.0)
    Limiting minimum:maximum stiffness ratio:        100.0E-12
    Minimum stiffness distinguished from zero:             0.0
    Include residual check:                    Yes
    Plate formulation:                         Mindlin
    Geometry based automatic constraints

    Flatness parameter:                              0.001000
    Zero stiffness value:                          100.0E-12
    Treat geometry check failures as:          Errors
```

Analysis Cases

Case	Name	Description	Error norm
A6	Analysis Case 6	L1 + L2 + L4	not calculated

Analysis Task 4

```
Name:           D+.75L+.75W
Solver:         GSS 40.3.0.14 Static (non-linear elements)
```

```
Status:         post-analysis (Analysed: Monday, February 14, 2011)

Advanced:

    Solution method:                            Active Column
    Front vector:                               (0.0, 0.0, 0.0)
    Limiting minimum:maximum stiffness ratio:        100.0E-12
    Minimum stiffness distinguished from zero:             0.0
    Include residual check:                     Yes
    Plate formulation:                          Mindlin
    Geometry based automatic constraints

    Flatness parameter:                                 0.001000
    Zero stiffness value:                            100.0E-12
    Treat geometry check failures as:           Errors
```

Analysis Cases

Case	Name	Description	Error norm
A7	Analysis Case 7	L1 + L2 + 0.75L3 + 0.75L4	not calculated

Standard Materials

	Name	Type	Young's Modulus	Poisson's Ratio	Shear Modulus	Density	Thermal Expansion Coeff.
			[ksi]		[ksi]	[kip.s²/in/in³]	[/°F]
1	Steel	Steel	29730.	0.3000	11440.	734.5E-9	6.667E-6
2	Concrete short term	Concrete	4061.	0.2000	1692.	224.6E-9	5.556E-6
3	Concrete long term	Concrete	2031.	0.2000	846.1	224.6E-9	5.556E-6
4	Aluminium	Aluminium	10150.	0.3400	3788.	253.6E-9	12.78E-6
5	Glass	Glass	10200.	0.2200	4179.	231.1E-9	4.444E-6

User Defined Materials

Material 1

Name	plywood
Type	Timber
Model	Elastic Isotropic
Young's Modulus	1500.ksi
Poisson's Ratio	0.3000
Density	44.98E-9kip.s²/in/in³
Temperature Coefficient	6.667E-6/°F
Shear Modulus	41.50ksi
Damping Ratio	0.0

Material 2

Name	cable steel	
Type	Steel	
Model	Elastic Isotropic	
Young's Modulus	14500.ksi	
Poisson's Ratio	0.3000	
Density	734.5E-9kip.s²/in/in³	
Temperature Coefficient	6.667E-6/°F	
Shear Modulus	5577.ksi	E / 2 (1 + ν)
Damping Ratio	0.0	

Beam Sections

Properties listed are analysis values, modified from base values where indicated. Refer to the Beam Sections Definitions output for modification details.

Iyz is reported only for non-symetrical sections. Iyz is enclosed by brackets where the section has been flagged to 'Ignore Iyz'.

Name	Material	Description	Mod.	A	Iyy	Izz	Iyz	J	Ky	Kz	Type	Cost
				[in^2]	[in^4]	[in^4]	[in^4]	[in^4]				[USD/kip.s²/in]
1 outer T	Steel	T(in)3.5x1.x0.25x0.5		1.250	1.492	0.04557	0.05859	0.3333	0.5638	N/A	0.0	
2 inner T	Steel	IT(in)3.5x1.x0.25x0.5		1.250	1.492	0.04557	0.05859	0.3333	0.5638	N/A	0.0	
4 blkg	plywood	R(in)5.x1.		5.000	10.42	0.4167	1.457	0.8333	0.8333	N/A	0.0	
6 cable	cable steel	C(in)0.35		0.09621	736.6E-6	736.6E-6	0.001473	0.8571	0.8571	N/A	0.0	
8 bolt strut	Steel	C(in)0.75		0.4418	0.01553	0.01553	0.03106	0.8571	0.8571	N/A	0.0	
10 splice plate	Steel	R(in)2.5x1.125		2.813	1.465	0.2966	0.8513	0.8333	0.8333	N/A	0.0	
12 cradle bm	Steel	T(in)4.5x4.75x1.x0.5		6.375	12.93	4.799	1.615	0.3105	0.4990	N/A	0.0	

Beam Section Summary

Values of Length, Mass, Surface Area and Cost are totals for all the elements / members that reference the property including those flagged as dummy, and are based on unmodified properties.

Description	No. of Elements	Elements: Length	Elements: Mass	Elements: Surface Area	Elements: Cost	No. of Members	Members: Length	Members: Mass	Members: Surface Area	Members: Cost
		[in]	[kip.s²/in]	[in^2]	[USD]		[in]	[kip.s²/in]	[in^2]	[USD]
1 T(in)3.5x1.x0.25x0.5	457	3448.	0.003166	31030.	0.0	0	0.0	0.0	0.0	0.0
2 IT(in)3.5x1.x0.25x0.5	426	3265.	0.002998	29390.	0.0	0	0.0	0.0	0.0	0.0
4 R(in)5.x1.	120	2160.	485.8E-6	25920.	0.0	0	0.0	0.0	0.0	0.0
6 C(in)0.35	32	1017.	71.90E-6	1126.	0.0	0	0.0	0.0	0.0	0.0
8 C(in)0.75	16	85.35	27.70E-6	202.4	0.0	0	0.0	0.0	0.0	0.0
10 R(in)2.5x1.125	8	16.75	34.60E-6	121.4	0.0	0	0.0	0.0	0.0	0.0
12 T(in)4.5x4.75x1.x0.5	0	0.0	0.0	0.0	0.0	0	0.0	0.0	0.0	0.0

2D Element Properties

Name	Axis	Type	Material	Thickness	Bending Thickness	In-plane Factor	Additional Mass Thickness	Mass Factor
				[in]	[in]		[in]	[kip.s²/in/in^2]
1 plywood 1	Global	Flat Shell	plywood	1.000	100.%	100.%	0.0	

Total Loads & Reactions

Case: A1 : self wt

Total moments are about the global origin
Output axes: global

	Fx [kip]	Fy [kip]	Fz [kip]	|F| [kip]	Mxx [kip-in]	Myy [kip-in]	Mzz [kip-in]	|M| [kip-in]
Total Loads								
Applied disp.	0.0	0.0	0.0	0.0	0.0	0.0	0.0	0.0
On Nodes	0.0	0.0	0.0	0.0	0.0	0.0	0.0	0.0
On Beams	0.0	0.0	0.0	0.0	0.0	0.0	0.0	0.0
On 2D elements	0.0	0.0	0.0	0.0	0.0	0.0	0.0	0.0
Gravity loads	0.0	0.0	-2.905	2.905	-130.7	294.3	0.0	322.0
Inertia	0.0	0.0	0.0	0.0	0.0	0.0	0.0	0.0
Sum	***0.0***	***0.0***	***-2.905***	***2.905***	***-130.7***	***294.3***	***0.0***	***322.0***

Total Reactions

At Restraints	15.44E-9	0.0	2.905	2.905	130.7	-294.3	3.815E-6	322.0
At Spring Suppts	0.0	0.0	0.0	0.0	0.0	0.0	0.0	0.0
At Ground Springs	0.0	0.0	0.0	0.0	0.0	0.0	0.0	0.0
At Soil Supports	0.0	0.0	0.0	0.0	0.0	0.0	0.0	0.0
Sum	***15.44E-9***	***0.0***	***2.905***	***2.905***	***130.7***	***-294.3***	***3.815E-6***	***322.0***

Total Load and Reaction

Sum of sums	***15.44E-9***	***0.0***	***11.20E-6***	***11.20E-6***	***198.8E-6***	***-172.9E-6***	***3.815E-6***	***263.5E-6***
Total Weight of Structure				2.905				

Total Loads & Reactions

Case: A2 : super dead

Total moments are about the global origin
Output axes: global

	Fx [kip]	Fy [kip]	Fz [kip]	|F| [kip]	Mxx [kip-in]	Myy [kip-in]	Mzz [kip-in]	|M| [kip-in]
Total Loads								
Applied disp.	0.0	0.0	0.0	0.0	0.0	0.0	0.0	0.0
On Nodes	0.0	0.0	0.0	0.0	0.0	0.0	0.0	0.0
On Beams	0.0	0.0	-6.015	6.015	-270.2	609.2	0.0	666.4
On 2D elements	0.0	0.0	0.0	0.0	0.0	0.0	0.0	0.0
Gravity loads	0.0	0.0	0.0	0.0	0.0	0.0	0.0	0.0
Inertia	0.0	0.0	0.0	0.0	0.0	0.0	0.0	0.0
Sum	***0.0***	***0.0***	***-6.015***	***6.015***	***-270.2***	***609.2***	***0.0***	***666.4***
Total Reactions								
At Restraints	76.32E-9	-54.89E-9	6.015	6.015	270.2	-609.2	2.062E-6	666.4
At Spring Suppts	0.0	0.0	0.0	0.0	0.0	0.0	0.0	0.0
At Ground Springs	0.0	0.0	0.0	0.0	0.0	0.0	0.0	0.0
At Soil Supports	0.0	0.0	0.0	0.0	0.0	0.0	0.0	0.0
Sum	***76.32E-9***	***-54.89E-9***	***6.015***	***6.015***	***270.2***	***-609.2***	***2.062E-6***	***666.4***
Total Load and Reaction								
Sum of sums	***76.32E-9***	***-54.89E-9***	***-2.634E-6***	***2.636E-6***	***-51.86E-6***	***276.6E-6***	***2.062E-6***	***281.4E-6***
Total Weight of Structure				2.905				

Total Loads & Reactions

Case: A3 : live

Total moments are about the global origin
Output axes: global

	Fx [kip]	Fy [kip]	Fz [kip]	|F| [kip]	Mxx [kip-in]	Myy [kip-in]	Mzz [kip-in]	|M| [kip-in]
Total Loads								
Applied disp.	0.0	0.0	0.0	0.0	0.0	0.0	0.0	0.0
On Nodes	0.0	0.0	0.0	0.0	0.0	0.0	0.0	0.0
On Beams	0.0	0.0	-4.412	4.412	-197.8	446.7	0.0	488.5
On 2D elements	0.0	0.0	0.0	0.0	0.0	0.0	0.0	0.0
Gravity loads	0.0	0.0	0.0	0.0	0.0	0.0	0.0	0.0
Inertia	0.0	0.0	0.0	0.0	0.0	0.0	0.0	0.0
Sum	***0.0***	***0.0***	***-4.412***	***4.412***	***-197.8***	***446.7***	***0.0***	***488.5***

Total Reactions

At Restraints	0.0	-27.44E-9	4.412	4.412	197.8	-446.7	9.423E-6	488.5
At Spring Suppts	0.0	0.0	0.0	0.0	0.0	0.0	0.0	0.0
At Ground Springs	0.0	0.0	0.0	0.0	0.0	0.0	0.0	0.0
At Soil Supports	0.0	0.0	0.0	0.0	0.0	0.0	0.0	0.0
Sum	***0.0***	***-27.44E-9***	***4.412***	***4.412***	***197.8***	***-446.7***	***9.423E-6***	***488.5***

Total Load and Reaction

Sum of sums	***0.0***	***-27.44E-9***	***-439.1E-9***	***439.9E-9***	***-34.57E-6***	***103.7E-6***	***9.423E-6***	***109.7E-6***

Total Weight of Structure 2.905

Total Loads & Reactions

Case: A4 : wind

Total moments are about the global origin
Output axes: global

	Fx [kip]	**Fy** [kip]	**Fz** [kip]	**|F|** [kip]	**Mxx** [kip-in]	**Myy** [kip-in]	**Mzz** [kip-in]	**|M|** [kip-in]
Total Loads								
Applied disp.	0.0	0.0	0.0	0.0	0.0	0.0	0.0	0.0
On Nodes	0.0	0.0	0.0	0.0	0.0	0.0	0.0	0.0
On Beams	2.024	0.0	1.903	2.778	85.18	-170.8	-91.06	211.5
On 2D elements	0.0	0.0	0.0	0.0	0.0	0.0	0.0	0.0
Gravity loads	0.0	0.0	0.0	0.0	0.0	0.0	0.0	0.0
Inertia	0.0	0.0	0.0	0.0	0.0	0.0	0.0	0.0
Sum	***2.024***	***0.0***	***1.903***	***2.778***	***85.18***	***-170.8***	***-91.06***	***211.5***
Total Reactions								
At Restraints	-2.024	85.76E-9	-1.903	2.778	-85.18	170.8	91.06	211.5
At Spring Suppts	0.0	0.0	0.0	0.0	0.0	0.0	0.0	0.0
At Ground Springs	0.0	0.0	0.0	0.0	0.0	0.0	0.0	0.0
At Soil Supports	0.0	0.0	0.0	0.0	0.0	0.0	0.0	0.0
Sum	***-2.024***	***85.76E-9***	***-1.903***	***2.778***	***-85.18***	***170.8***	***91.06***	***211.5***
Total Load and Reaction								
Sum of sums	***-658.6E-9***	***85.76E-9***	***-658.6E-9***	***935.4E-9***	***-25.93E-6***	***0.0***	***43.22E-6***	***50.40E-6***

Total Weight of Structure 2.905

Total Loads & Reactions

Case: A5 : Analysis Case 5

Total moments are about the global origin
Output axes: global

	Fx [kip]	**Fy** [kip]	**Fz** [kip]	**|F|** [kip]	**Mxx** [kip-in]	**Myy** [kip-in]	**Mzz** [kip-in]	**|M|** [kip-in]
Total Loads								
Applied disp.	0.0	0.0	0.0	0.0	0.0	0.0	0.0	0.0
On Nodes	0.0	0.0	0.0	0.0	0.0	0.0	0.0	0.0
On Beams	0.0	0.0	-10.43	10.43	-468.0	1056.	0.0	1155.
On 2D elements	0.0	0.0	0.0	0.0	0.0	0.0	0.0	0.0
Gravity loads	0.0	0.0	-2.905	2.905	-130.7	294.3	0.0	322.0
Inertia	0.0	0.0	0.0	0.0	0.0	0.0	0.0	0.0
Sum	***0.0***	***0.0***	***-13.33***	***13.33***	***-598.7***	***1350.***	***0.0***	***1477.***
Total Reactions								

At Restraints	219.5E-9	219.5E-9	13.33	13.33	598.7	-1350.	50.97E-6	1477.
At Spring Suppts	0.0	0.0	0.0	0.0	0.0	0.0	0.0	0.0
At Ground Springs	0.0	0.0	0.0	0.0	0.0	0.0	0.0	0.0
At Soil Supports	0.0	0.0	0.0	0.0	0.0	0.0	0.0	0.0
Sum	***219.5E-9***	***219.5E-9***	***13.33***	***13.33***	***598.7***	***-1350.***	***50.97E-6***	***1477.***

Total Load and Reaction

Sum of sums	***219.5E-9***	***219.5E-9***	***7.245E-6***	***7.251E-6***	***233.4E-6***	***795.2E-6***	***50.97E-6***	***830.3E-6***

Total Weight of Structure 2.905

Total Loads & Reactions

Case: A6 : Analysis Case 6

Total moments are about the global origin
Output axes: global

	Fx [kip]	Fy [kip]	Fz [kip]	|F| [kip]	Mxx [kip-in]	Myy [kip-in]	Mzz [kip-in]	|M| [kip-in]
Total Loads								
Applied disp.	0.0	0.0	0.0	0.0	0.0	0.0	0.0	0.0
On Nodes	0.0	0.0	0.0	0.0	0.0	0.0	0.0	0.0
On Beams	2.024	0.0	-4.112	4.583	-185.0	438.4	-91.06	484.5
On 2D elements	0.0	0.0	0.0	0.0	0.0	0.0	0.0	0.0
Gravity loads	0.0	0.0	-2.905	2.905	-130.7	294.3	0.0	322.0
Inertia	0.0	0.0	0.0	0.0	0.0	0.0	0.0	0.0
Sum	***2.024***	***0.0***	***-7.017***	***7.302***	***-315.7***	***732.7***	***-91.06***	***803.0***
Total Reactions								
At Restraints	-2.024	54.89E-9	7.017	7.303	315.7	-732.7	91.06	803.0
At Spring Suppts	0.0	0.0	0.0	0.0	0.0	0.0	0.0	0.0
At Ground Springs	0.0	0.0	0.0	0.0	0.0	0.0	0.0	0.0
At Soil Supports	0.0	0.0	0.0	0.0	0.0	0.0	0.0	0.0
Sum	***-2.024***	***54.89E-9***	***7.017***	***7.303***	***315.7***	***-732.7***	***91.06***	***803.0***
Total Load and Reaction								
Sum of sums	***0.0***	***54.89E-9***	***12.07E-6***	***12.07E-6***	***164.2E-6***	***0.0***	***43.22E-6***	***169.8E-6***

Total Weight of Structure 2.905

Total Loads & Reactions

Case: A7 : Analysis Case 7

Total moments are about the global origin
Output axes: global

	Fx [kip]	Fy [kip]	Fz [kip]	|F| [kip]	Mxx [kip-in]	Myy [kip-in]	Mzz [kip-in]	|M| [kip-in]
Total Loads								
Applied disp.	0.0	0.0	0.0	0.0	0.0	0.0	0.0	0.0
On Nodes	0.0	0.0	0.0	0.0	0.0	0.0	0.0	0.0
On Beams	1.518	0.0	-7.896	8.041	-354.7	816.1	-68.29	892.5
On 2D elements	0.0	0.0	0.0	0.0	0.0	0.0	0.0	0.0
Gravity loads	0.0	0.0	-2.905	2.905	-130.7	294.3	0.0	322.0
Inertia	0.0	0.0	0.0	0.0	0.0	0.0	0.0	0.0
Sum	***1.518***	***0.0***	***-10.80***	***10.91***	***-485.4***	***1110.***	***-68.29***	***1214.***
Total Reactions								
At Restraints	-1.518	109.8E-9	10.80	10.91	485.4	-1110.	68.29	1214.

At Spring Suppts	0.0	0.0	0.0	0.0	0.0	0.0	0.0	0.0
At Ground Springs	0.0	0.0	0.0	0.0	0.0	0.0	0.0	0.0
At Soil Supports	0.0	0.0	0.0	0.0	0.0	0.0	0.0	0.0
Sum	***-1.518***	***109.8E-9***	***10.80***	***10.91***	***485.4***	***-1110.***	***68.29***	***1214.***

Total Load and Reaction

Sum of sums	***-219.5E-9***	***109.8E-9***	***12.51E-6***	***12.52E-6***	***198.8E-6***	***380.3E-6***	***43.22E-6***	***431.3E-6***

Total Weight of Structure	2.905

ARUP

UH Solar Decathlon
General Analysis
Typical Module

Job No.	Sheet No.	Rev.
214081	4.2-1	
Drg. Ref.		
Made by	Date 14-Feb-2011	Checked

Scale: 1:38.98
Axial Force, Fx: 5.000 kip/pic.cm
3.000 kip
2.000 kip
1.000 kip
0.0 kip
-1.000 kip
-2.000 kip
-3.000 kip
Case: A5 : Analysis Case 5

(D+L)

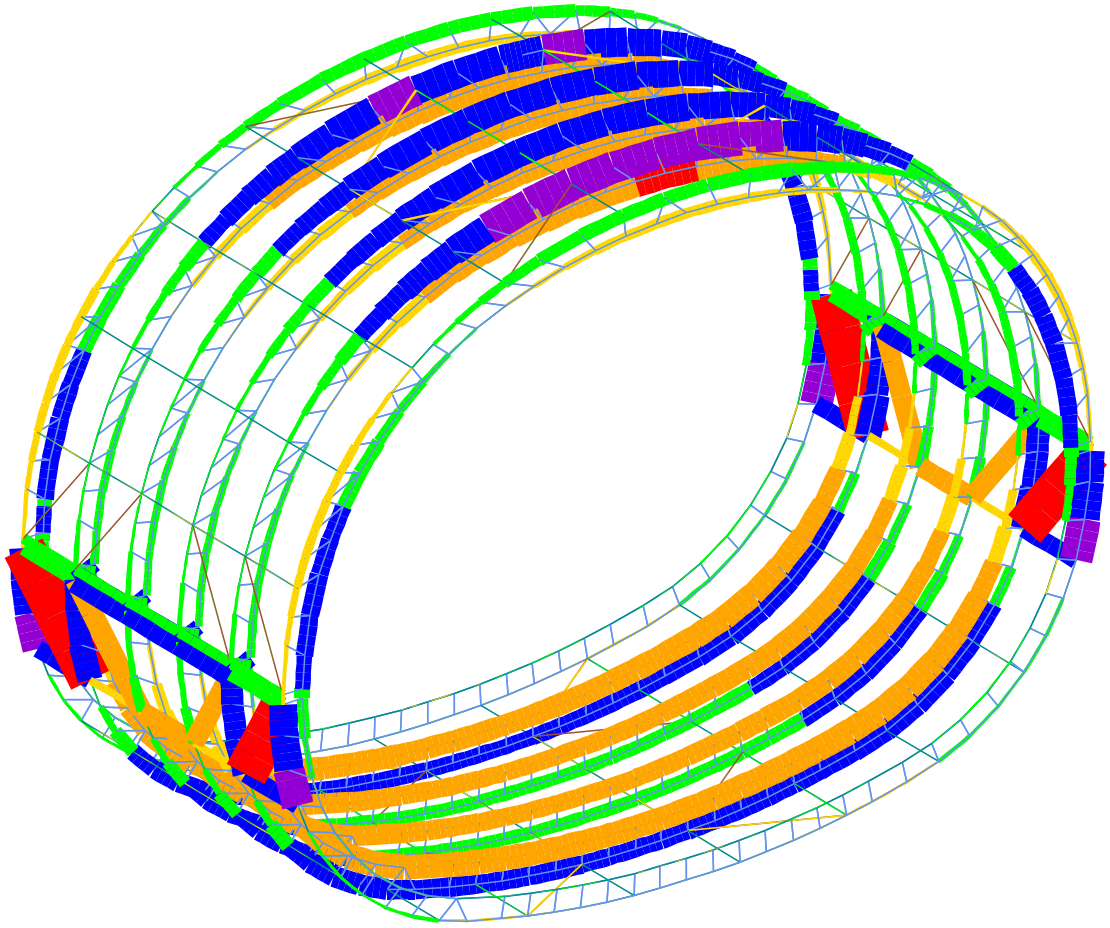

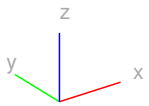

ARUP

UH Solar Decathlon
General Analysis
Typical Module

Job No.	Sheet No.	Rev.
214081	4.2-2	
Drg. Ref.		
Made by	Date 14-Feb-2011	Checked

Scale: 1:38.98
Axial Force, Fx: 2.500 kip/pic.cm

- 2.000 kip
- 1.500 kip
- 1.000 kip
- 0.5000 kip
- 0.0 kip
- -0.5000 kip
- -1.000 kip
- -1.500 kip
- -2.000 kip

Case: A6 : Analysis Case 6

(D+W)

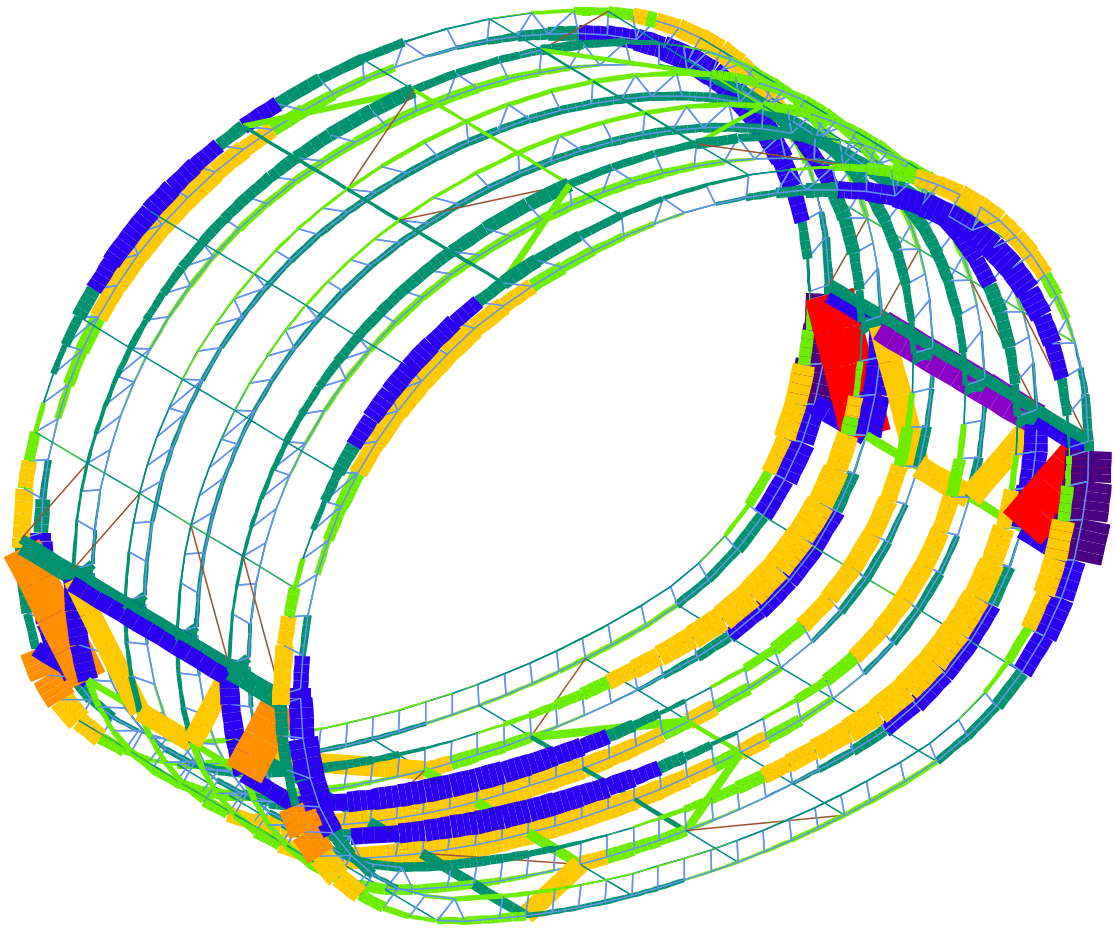

ARUP

UH Solar Decathlon
General Analysis
Typical Module

Job No.	Sheet No.	Rev.
214081	4.2-3	
Drg. Ref.		
Made by	Date 14-Feb-2011	Checked

Scale: 1:38.98
Axial Force, Fx: 5.000 kip/pic.cm

- 2.500 kip
- 2.000 kip
- 1.500 kip
- 1.000 kip
- 0.5000 kip
- 0.0 kip
- -0.5000 kip
- -1.000 kip
- -1.500 kip
- -2.000 kip
- -2.500 kip

Case: A7 : Analysis Case 7

(D+.75L+.75W)

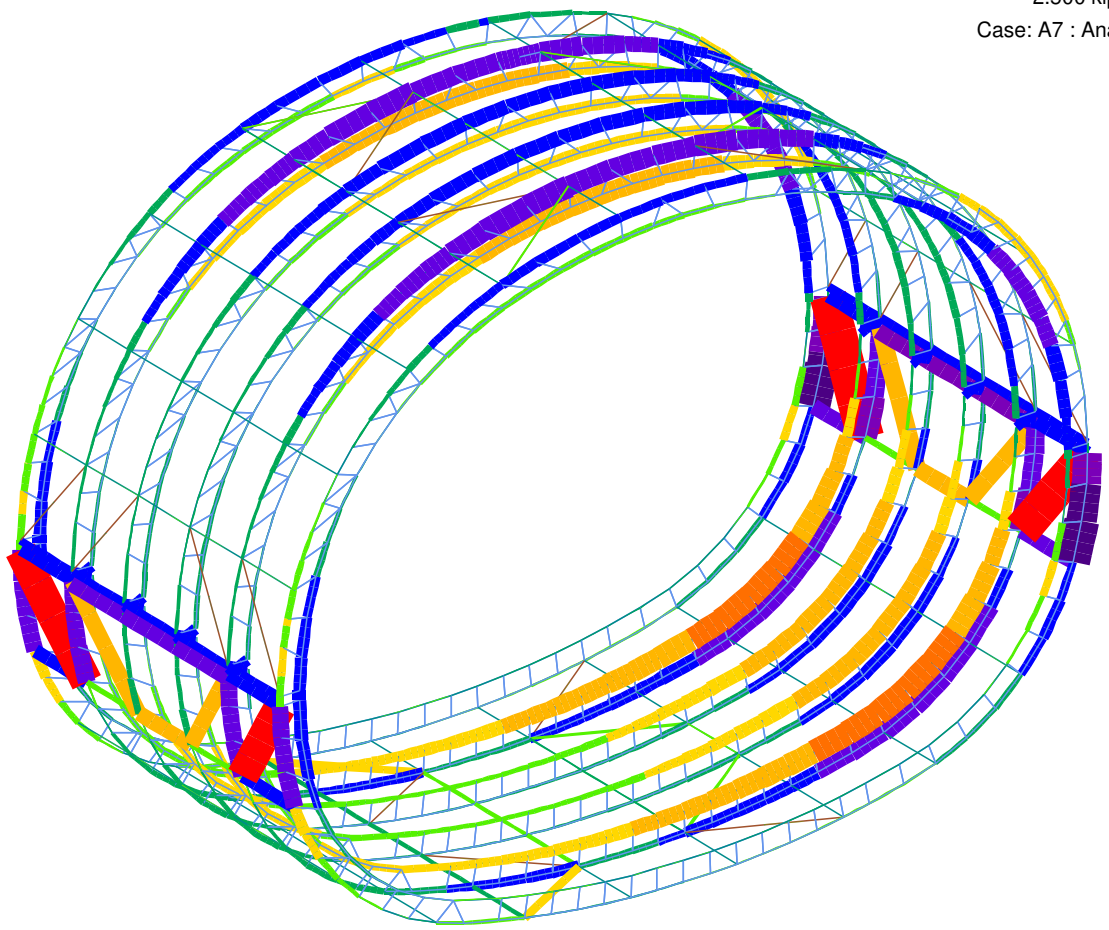

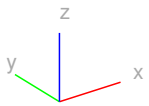

ARUP

Job No.	Sheet No.	Rev.
	4.2-4	
Member-Location		
Job Title	Drg. Ref.	
	Made By	Date	Chd.

TYPICAL RIB

LOADING

- See attached axial diagrams, which indicate forces on the angle flanges:

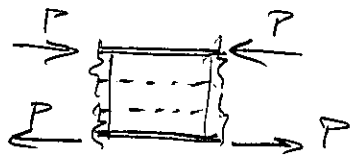

$P_{D+L} = 3.0\ k$

$P_u = 1.6\,P_{D+L} = 4.8\ k$

BUILT-UP ANGLE

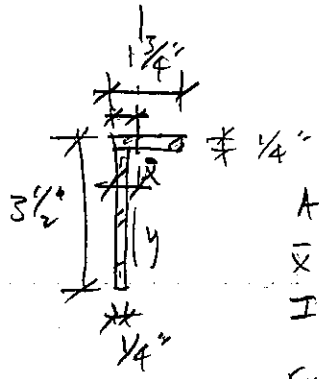

$A = 1.25\ in^2$

$\bar{x} = 0.388"$

$I_y = 0.272\ in^4$

$r_y = 0.466"$

- Assume constrained to prevent torsional buckling

  $r_y = 0.466"$

- Max spacing of blocking: 48":

  $\frac{kL}{r_y} = 103$

  $\phi F_{cr} = 18.5\ ksi$

  $\phi P_n = 23.1\ k$

$$\boxed{\frac{P_u}{\phi P_n} = 0.21}\ \text{OK}$$

ARUP

Job No.	Sheet No.	Rev.
	4.2-5	
Member-Location		
Job Title	Drg. Ref.	
	Made By	Date	Chd.

BOLTING TO PLYWOOD

- Develop P over 1/4 shell circumference = 11'

$$\frac{P}{11'} = 273\ \#/ft.$$

- 1/2" ϕ bolt in 1" Plywood @ 12" OC :

$$Z' = 300\ \#/bolt \qquad OK$$

ARUP

Job No.	Sheet No.	Rev.
	A.2-6	
Member-Location		
Job Title	Drg. Ref.	
	Made By	Date	Chd.

PRIMARY RIB SPLICE

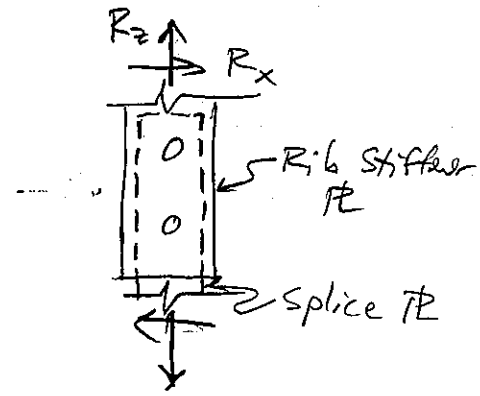

LOADING

- Wind on upper half:

  See Solar Panel Support Structure calcs.

  $R_{xw} = 908^{\#}$

  $R_{zw} = 2048^{\#}$ (upward)

  $R_{zw} = \left(\frac{2.6}{13.5}\right) 2048 = 394^{\#}$ downward

- Dead on upper half:

  $R_{zD} = (10psf)(16')(7.5') + (10psf)(22.5')(7.5') = 2888^{\#}$

  $R_{xD} = 280^{\#}$

- Live on upper half:

  $R_{zL} = (20psf)(16')(7.5') = 2400^{\#}$

  $R_{xL} = 480^{\#}$

LOAD COMBINATION

- $.9D + 1.6W$:

  $R_{xu} = 1.7\ k$

  $R_{zu} = 0.68\ k$

- $1.2D + 1.0L + 1.6W$:

  $R_{xu} = 2.3\ k$

  $R_{zu} = 6.5\ k$

ARUP

Job No.	Sheet No.	Rev.
	4.2-7	
Member-Location		
Job Title	Drg. Ref.	
	Made By	Date	Chd.

BOLT SHEAR

$R_u = \sqrt{R_{xu}^2 + R_{zu}^2} = 6.9\ k$

(2) 3/4" A307 bolts in double shear: $\phi R_n = 2(15.9) = 31.8\ k$ OK

NET SECTION RUPTURE

• (2) 1/4" x 7" PL:

$A_{nt} = \frac{1}{4}(7") - \frac{1}{4}\left(\frac{3}{4}+\frac{1}{8}\right) - 2\left(\frac{1}{4}\right)\left(\frac{1}{2}+\frac{1}{8}\right) = 1.22\ in^2$

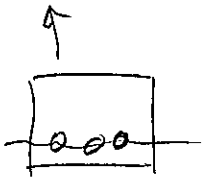

$\phi R_n = 53.0\ k$ OK

• 1/8" x 2" PL:

$A_{nt} = (1.125")(2") - (1.125)\left(\frac{3}{4}+\frac{1}{8}\right) = 1.27\ in^2$

OK by insp.

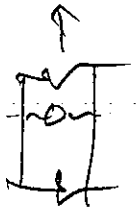

ADDITIONAL BENDING IN SPLICE PL.

$M_u = R_{xu}(3.5") = 8.05\ k\text{-}in.$

$\frac{M_u}{Z} = 7.2\ ksi$ OK

$Z = \frac{1}{4}(1.125)(2)^2 = 1.125\ in^3$

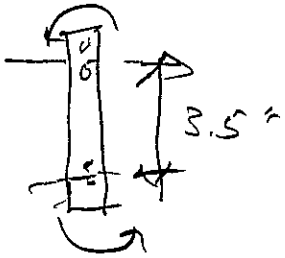

• Additional bolt shear:

$R_u = \frac{M_u}{2(3.0")} = 1.3\ k$ OK

ARUP

Job No.	Sheet No.	Rev.
	4.2-8	
Member-Location		
Job Title	Drg. Ref.	
	Made By	Date	Chd.

TYPICAL CABLE

- See analysis results:

  $P = 3.0\ k$

- (2) 6.5 mm cables, 7.0 k breaking load (attached):

  $F.S. = \frac{2(7)}{3} = \boxed{4.7}$

4/2-9

Detailed Product Description

Galvanized aircraft cable specification:MIL-W-83420D/MIL-W-1511A

Galvanized aircraft cable specification:MIL-W-83420D/MIL-W-1511A

NOMINAL DIAMETER	TOLERANCE ON DIA	APPROX WEIGHT	APPROX WEIGHT	MIN.BREAKING STRENGTH	
				GALVANIZED	STAINLESS STEEL
INCHS	INCHS	KG/100	LB/1000	LB	LB
7x7					
3/64"	0.0080	1.91	4.2	270	270
1/16"	0.0100	3.40	7.5	480	480
3/32"	0.0120	7.26	16.0	920	920
1/8"	0.0140	12.93	28.5	1700	1700
5/32"	0.0160	19.50	43.0	2600	2400
3/16"	0.0180	28.12	62.0	3700	3700
1/4"	0.0180	48.08	106.0	6100	6100
7x19					
3/32"	0.0120	7.89	17.4	1000	920
1/8"	0.0140	13.15	29.0	2000	1760
5/32"	0.0160	20.41	45.0	2800	2400
3/16"	0.0180	29.48	65.0	4200	3700
7/32"	0.0180	39.01	86.0	5600	5000
1/4"	0.0180	49.90	110.0	7000	6400
9/32"	0.0200	63.05	139.0	8000	7800
5/16"	0.0220	78.47	173.0	9800	9000
3/8"	0.0260	110.22	243.0	14400	12000

Source: leadinghardware.en.alibaba.com

ARUP

Job No.	Sheet No.	Rev.
	4.2-10	
Member-Location		
Job Title	Drg. Ref.	
	Made By	Date	Chd.

TYPICAL BLOCKING

$P = 1200\#$

• 1½" x 5" plywood:

$\frac{P}{A} = 160$ psi OK

• (2) ¾" ϕ bolts

$R_{allow} \approx 2\left(\frac{900+360}{2}\right)(1.25) = 1450\#$ OK

C_D for LL ≤ 7 days

average $Z_{\parallel}$ & $Z_{\perp}$ for DF lumber

ARUP

Job No.	Sheet No.	Rev.
214081	511-1	

Member-Location

Job Title: Solar Decathlon

Drg. Ref.

Made By: BT Date: 3/22/11 Chd.

CRADLE BEAM

LOADING

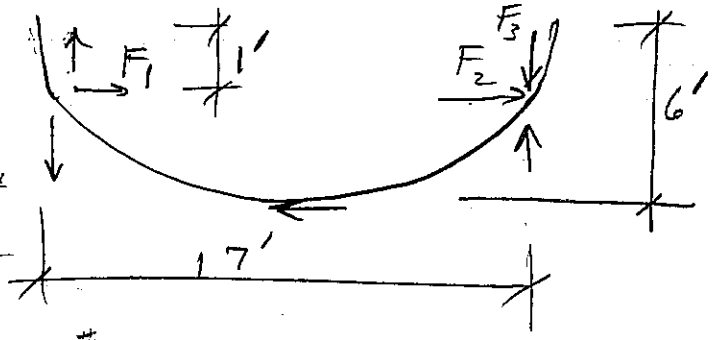

- Horizontal wind:

$F_{1W} = (7.9\,psf)(7.5')(13') = 770^{\#}$

$F_{2W} = (8.5\,psf)(7.5')(13') = 829^{\#}$

$F_{3W} = \frac{1}{2}(7.9+8.5\,psf)(7.5')(8')^2/17' = 217^{\#}$

- Gravity:

$F_{3D} = (30\,plf)(5)\left(\frac{18'}{2}\right) = 1350^{\#}$

$F_{3L} = 1350^{\#}$

BEAM BENDING

$M_u = 1.6\left[F_{2W}(5') + (F_{1W}+F_{2W})\left(\frac{5'}{17'}\right)(8.5')\right]$

$= 156\ k\text{-}in.$

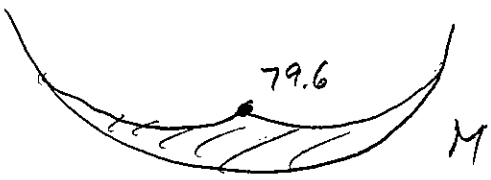

$\frac{M_u}{S} \le 0.9(36\ ksi) = 32.4\ ksi$

$S \ge 4.83\ in^3$

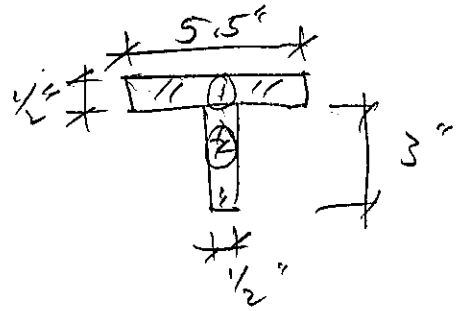

$A_1 = \frac{1}{2}(5.5) = 2.75\ in^2$

$A_2 = 3\left(\frac{1}{2}\right) = 1.5\ in^2$

$I_1 = \frac{1}{12}(5.5)\left(\frac{1}{2}\right)^3 = 0.057$

$I_2 = \frac{1}{12}\left(\frac{1}{2}\right)(3)^3 = 1.125$

$\bar{y}_1 = 0.25''$

$\bar{y}_2 = 2''$

$\bar{y} = \frac{A_1\bar{y}_1 + A_2\bar{y}_2}{A_1+A_2} = 0.868''$

$I = I_1 + I_2 + A_1(\bar{y}-\bar{y}_1)^2 + A_2(\bar{y}-\bar{y}_2)^2 = 4.15 \Rightarrow S = 1.58$

ARUP

Job No.	Sheet No.	Rev.
	511-2	

Member-Location

Job Title

Drg. Ref.

Made By | Date | Chd.

$A_2 = 6(\frac{1}{2}) = 3 \text{ in}^2$

$I_2 = \frac{1}{12}(\frac{1}{2})(6)^3 = 9 \text{ in}^4$

$\bar{y}_2 = 3.5''$

$\bar{y} = 1.95''$

$I = 250 \Rightarrow S = 5.48$

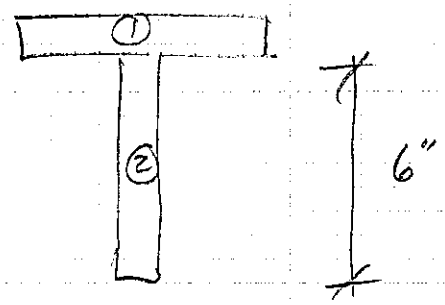

$A_2 = (2)(3) = 6 \text{ in}^2$

$I_2 = \frac{1}{12}(2)(3)^3 = 4.5 \text{ in}^4$

$\bar{y}_2 = 2''$

$\bar{y} = 1.45''$

$I = 10.33 \Rightarrow S = 5.04 \text{ in}^3$

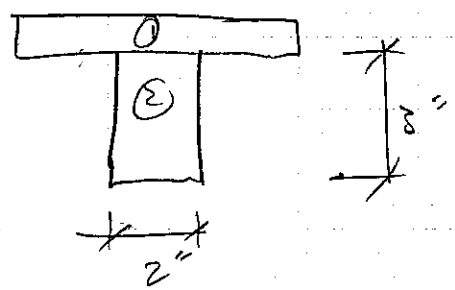

ARUP

Job No.	Sheet No.	Rev.
214081	5.2-1	
Member-Location		
Job Title: Solar Decathlon	Drg. Ref.	
	Made By: IST	Date: 3/22/11	Chd.

CANTILEVERED END SUPPORT

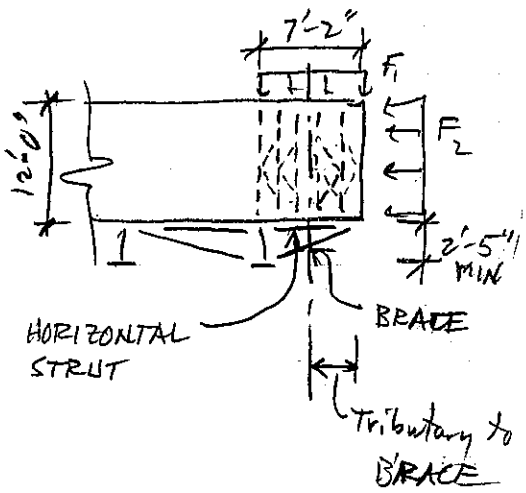

LOADING

- Dead load:

$$F_{1D} = (20psf)(45') = 900\ plf$$

- Live load on roof:

$$F_{1L_r} = (20psf)(16') = 320\ plf$$

- Live load on floor:

$$F_{1L_f} = (40psf)(16') = 640\ plf$$

$$F_{1L} = 960\ plf$$

- wind on roof, suction:

$$F_{1W} = (-21psf)(12') + (-14psf)(20') = -532\ plf$$

- Wind on roof, downward:

$$F_{1W} = (2.6\ psf)(32') = 83.2\ plf$$

- Wind on end wall:

$$F_{2W} = (8.4psf)(18') = 151\ plf \text{ inward}$$

- Because of large Live load and fact that horizontal wind is shared by other braces, load combo 1.2D + 1.6L governs by inspection for brace. 0.9D + 1.6W governs for horizontal strut

ARUP

Job No.	Sheet No.	Rev.
	5.2-2	
Member-Location		
Job Title	Drg. Ref.	
	Made By	Date	Chd.

AXIAL DEMAND

- Max. compression on brace:

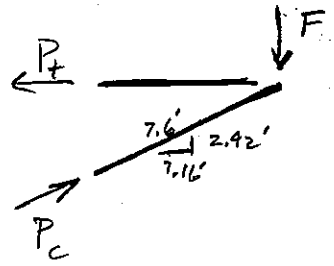

$F_D = \frac{1}{2}(900\,plf)\left(\frac{7.16'}{2}\right) = 1.61\ k$

$F_L = \frac{1}{2}(960\,plf)\left(\frac{7.16'}{2}\right) = 3.72\ k$

$F_u = 1.2F_D + 1.6F_L = 4.7\ k$

$P_{cu} = \left(\frac{7.6}{2.42}\right) 4.7\ k = 14.7\ k$

- Max. tension on horizontal strut:

$P_{tu} = \left(\frac{7.16}{7.6}\right) P_{cu} = 13.9\ k$

- Max. compression on horizontal strut:

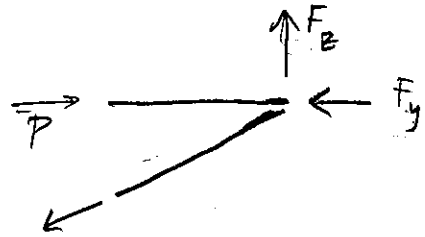

$F_{zD} = -1.61\ k$

$F_{zW} = \frac{1}{2}(532\,plf)\left(\frac{7.16'}{2}\right) = 0.95\ k$

$F_{yW} = \frac{1}{2}(151\,plf)(12'/2) = 0.46\ k$

$P_u = 1.6F_{yW} + 1.6\left(\frac{7.16}{2.42}\right)F_{zW} + 0.9\left(\frac{7.16}{2.42}\right)F_{zD} = 1.0\ k$

AXIAL CAPACITY

- 2½" std. Pipe, 7.6' length:

$\frac{KL}{r} = 95.8$

$\phi F_{cr} = 19.7\ ksi$

$\phi P_n = 31.3\ k$

$\boxed{\frac{P_u}{\phi P_n} = 0.47}$ OK

ARUP

Job No.	Sheet No.	Rev.
	5.2-3	
Member-Location		
Job Title	Drg. Ref.	
	Made By	Date	Chd.

END CONNECTION

$R_u = 13.9\ k$

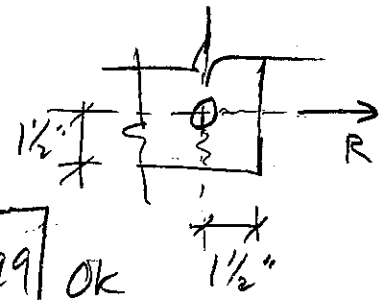

- 1"ϕ A307 Bolt:

$\phi R_n = 14.1\ k$

$\boxed{\frac{R_u}{\phi R_n} = 0.99}$ OK

- ¾"ϕ A307 Bolt in double shear:

$\phi R_n = 15.9\ k$

- Block shear, ½" PL

$A_{gv} = \frac{1}{2}"(1.5") = 0.75\ in^2$

$A_{gt} = 0.75\ in^2$

$A_{nv} = A_{gv} - \frac{1}{2}(\frac{1}{2}")(1.125") = 0.47\ in^2$

$A_{nt} = 0.47\ in^2$

$0.6 F_u A_{nv} = 16.3\ k > 0.6 F_y A_{gv} = 16.2\ k$

$F_y = 36\ ksi$

$F_u = 58\ ksi$

$\phi R_n = 0.75\,[0.6 F_y A_{gv} + F_u A_{nt}] = 32.6\ k$

$\boxed{\frac{R_u}{\phi R_n} = 0.43}$ OK

- Bolt bearing, ½" PL

$L_c = 1.5" - \frac{1}{2}(1.125") = 0.94"$

$1.2 L_c = 1.13" < 2.4d = 2.4"$

$\phi R_n = 0.75\,(1.2 L_c t F_u) = 24.5\ k$

$\boxed{\frac{R_u}{\phi R_n} = 0.57}$ OK

- Bolt bearing, ¾" bolt in 2½" Std. pipe

$L_c = 1.5" - \frac{1}{2}(\frac{7}{8}") = 1.06"$

$\phi R_n = 17.3\ K$

ARUP

Job No.	Sheet No.	Rev.
	5.2-4	
Member-Location		
Job Title	Drg. Ref.	
	Made By	Date	Chd.

- Net section rupture, 2½" std. pipe:

$$A_{nt} = 1.59\,in^2 - 2\left(\tfrac{1}{2}'' + \tfrac{1}{8}''\right)(0.189'') - 2\left(1\tfrac{1}{8}''\right)(0.189'') = 0.93\,in^2$$

$$\phi R_n = 0.75\,A_{nt} F_u = 33.4\ k \quad \text{ok}$$

- Bending & shear in 1" bolt:

$$M_n = F_{nt}'\,S_b = 3.6\ k\text{-}in$$

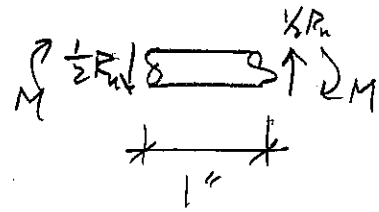

$$F_{nt}' = 1.3F_{nt} - \frac{F_{nt}}{\phi F_{nv}} f_v = 36.5\ ksi$$

$F_{nt} = 45\ ksi$

$F_{nv} = 24\ ksi$

$\phi = 0.75$

$f_v = \dfrac{\frac{1}{2}R_u}{A_b} = 8.82\ ksi$

$S_b = \dfrac{\pi d^3}{32} = 0.098\ in^3$

$M_n = \left(\tfrac{1}{2}R_u\right)(1'')\tfrac{1}{2} = 3.5\ k\text{-}in.$ NG

- 7/8" A325 Bolt:

$F_{nt}' = 88.0\ ksi$

$F_{nt} = 90\ ksi$

$F_{nv} = 48\ ksi$

$f_v = 11.6\ ksi$

$S_b = 0.066\ in^3$

$\phi M_n = 4.3\ k\text{-}in.$

$$\boxed{\frac{M_u}{\phi M_n} = 0.81} \quad \text{ok}$$

ARUP

Job No.	Sheet No.	Rev.
214681	6.1-1	

Member-Location

Job Title: Solar Decathlon

Drg. Ref.

Made By: BT Date: 3/22/11 Chd.

SOLAR PANEL SUPPORT STRUCTURE

- Truss structure will be treated as a simple frame

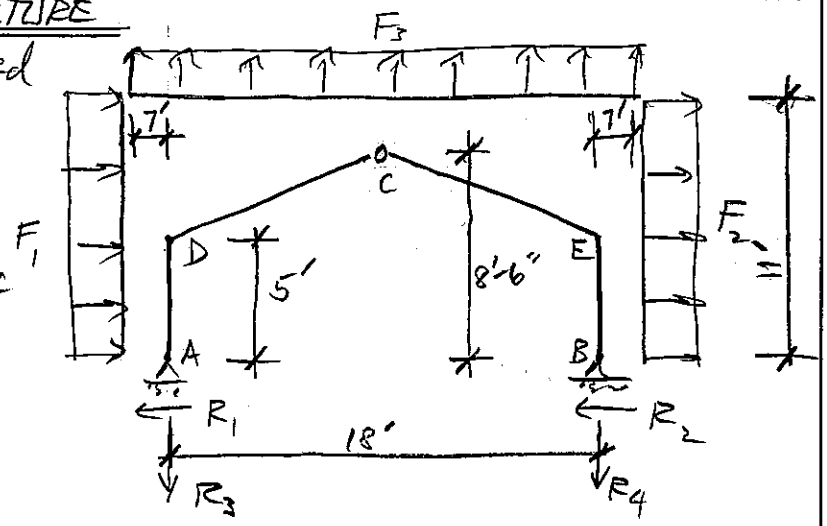

LOADING

- Horizontal wind:

$F_{1w} = (7.9\,psf)(7.5') = 59.25\,plf$

$F_{2w} = (10.5\,psf)(7.5') = 78.75\,plf$

- Wind uplift:

$F_{3w} = (13.2\,psf)(7.5') = 99\,plf$

- Wind downward:

$F_{3u} = (-2.5\,psf)(7.5') = -18.75\,plf$

- Self wt.:

$F_{3D} = (-10\,psf)(7.5') = -75\,plf$

- Live:

$F_{3L} = (-20\,psf)(7.5') = -150\,plf$

ARUP

Job No.	Sheet No.	Rev.
	6.1-2	
Member-Location		
Job Title	Drg. Ref.	
	Made By	Date	Chd.

REACTIONS

$\rightarrow \Sigma F_x = 0 : (F_1 + F_2)(11') - R_1 - R_2 = 0$

$+\uparrow \Sigma F_y = 0 : F_3(32') - R_3 - R_4 = 0$

$\circlearrowleft \Sigma M_* = 0 : -\frac{1}{2}(F_1+F_2)(11')^2 - \frac{1}{2}(F_2)(7')^2 + \frac{1}{2}(F_3)(25')^2 - R_4(18') = 0$

$-60.5(F_1+F_2) + 288F_3 - 18R_4 = 0$

$\circlearrowleft \Sigma M_{c\,int} = 0 : \frac{1}{2}F_1(8.5')^2 - \frac{1}{2}F_1(2.5')^2 - \frac{1}{2}F_3(16')^2 + R_3(9') - R_1(8.5') = 0$

$33F_1 - 128F_3 + 9R_3 - 8.5R_1 = 0$

- Wind only:

$R_{4W} = 1120^{\#}$

$R_{3W} = 2048^{\#}$

$R_{1W} = 908^{\#}$

$R_{2W} = 610^{\#}$

Check: $\frac{1}{2}F_3(16')^2 + \frac{1}{2}F_2(8.5')^2 - \frac{1}{2}F_2(2.5')^2 - R_2(8.5') - R_4(9') = 6 \sim 0$ ✓

- Dead only:

$R_{3D} = R_{4D} = \frac{1}{2}F_{3D}(32') = -1200^{\#}$

$R_{1D} = 141^{\#} = -R_{2D}$

- Live only:

$R_{3L} = R_{4L} = -2400^{\#}$

$R_{1L} = 242^{\#} = -R_{2L}$

ARUP

Job No.	Sheet No.	Rev.
	6.1-3	
Member-Location		
Job Title	Drg. Ref.	
	Made By	Date	Chd.

BENDING OF SIMPLE ELEMENTS

- Segment BE: wind only

$$M_E = R_2(5') - \tfrac{1}{2}F_2(5')^2 = 2066 \text{ \#-ft}$$

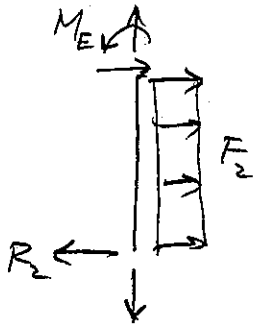

- Segment AD: wind only

$$M_D = R_1(5') - \tfrac{1}{2}F_1(5')^2 = 3799 \text{ \#-ft.}$$

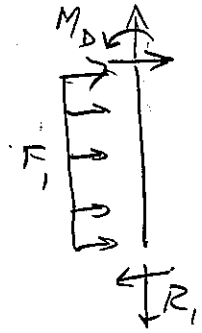

- Segment AD: dead & live only

$M_{DD} = 705$ \#-ft.

$M_{DL} = 1410$ \#-ft.

- Segment DC: wind only

$$W_r = \left(\frac{9}{9.7}\right)\left(\frac{16}{9}\right)F_3 - \left(\frac{3.5}{9.7}\right)\left(\frac{6}{2.5}\right)F_1$$

$$= 112 \text{ plf}$$

$$M_{DE} = \tfrac{1}{2}M_D - \tfrac{1}{8}W(9.7')^2 = 582 \text{ \#-ft.}$$

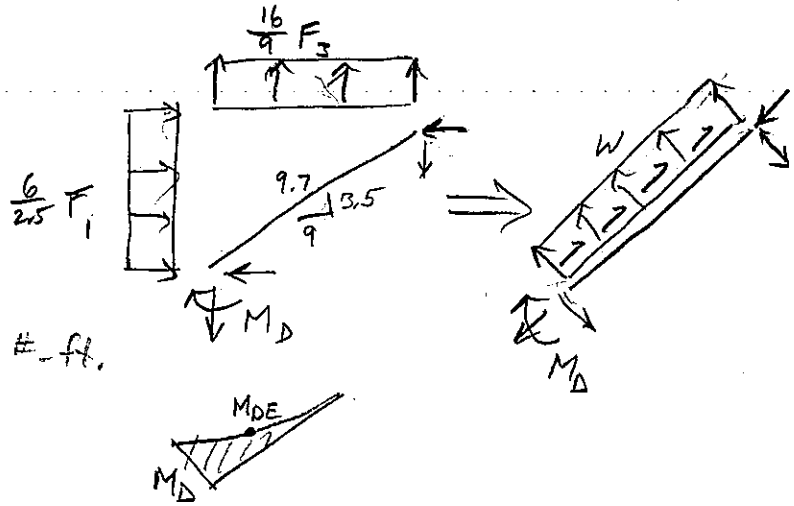

ARUP

Job No.	Sheet No.	Rev.
	6.1-4	
Member-Location		
Job Title	Drg. Ref.	
	Made By	Date	Chd.

• Segment CE: wind only.

$$w_W = \left(\frac{9}{9.7}\right)\left(\frac{16}{9}\right)F_3 - \left(\frac{3.5}{9.7}\right)\left(\frac{6}{2.5}\right)F_2$$

$$= 95.1 \text{ plf}$$

$$M_{CE} = \frac{1}{2}M_E + \frac{1}{8}w(9.7)^2 = 2152 \text{ \#-ft.}$$

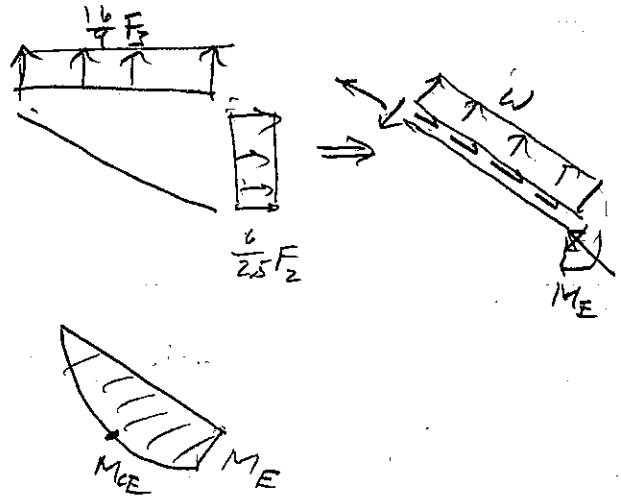

• Segment CE: gravity only

$$w_D = 124 \text{ plf}$$

$$w_L = 248 \text{ plf}$$

$$M_{CED} = \frac{1}{2}M_{ED} + \frac{1}{8}w_D(9.7)^2 = -1106 \text{ \#-ft.}$$

$$M_{CEL} = -2212 \text{ \#-ft.}$$

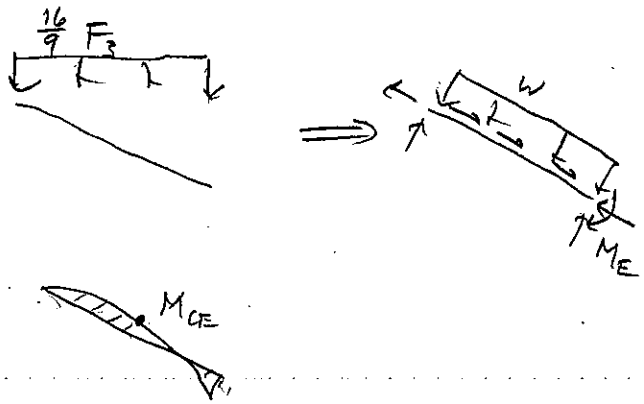

ARUP

Job No.	Sheet No.	Rev.
	61-5	
Member-Location		
Job Title	Drg. Ref.	
	Made By	Date	Chd.

DECOMPOSITION OF MOMENT TO ELEMENT FORCES

- Max moment segments AD & BE (wind only)

  $M_W = 3799$ #-ft.

  Min. truss depth = 2'

  $P_W = \frac{M_W}{2'} = 1900$ #

  $P_u = 1.6 P_W = 3040$ # ← governs

- Max moment segments DC & CE: 0.9D + 1.6W

  $M_u = 2448$ #-ft. (CE)

  $P_u = \frac{M_u}{2'} = 1224$ #

- Max moment in segments DC & CE: 1.2D + 1.6L

  $M_u = 4866$ #-ft. (CE)

  $P_u = \frac{M_u}{2'} = 2433$ #

- Max. moment in segments DC & CE: 1.2D + 1.0L + 1.6W

  W = downward wind = $\frac{2.5}{13.2}$ × uplift

  $M_u = 4191$ #-ft.

ARUP

Job No.	Sheet No.	Rev.
	6.1-6	
Member-Location		
Job Title	Drg. Ref.	
	Made By	Date	Chd.

TYPICAL STRUT

- Axial capacity of 1½" Std. Pipe:

  $r = 0.626''$, $A = 0.75 in^2$

  $F_y = 35$ ksi

  $K = 1.0$

L	KL/r	ϕF_{cr}	ϕP_n
3'	57.5	26.6	20 k
5'			
7'			
9'	172.5	7.60	5.7 k
10'	191.7	6.15	4.6 k

- Bending capacity of 1½" Std. pipe:

  $\phi M_n = 0.9 F_y Z = 13$ k-in. $= 1105$ k-ft.

- Axial demand: $P_u = 3.0$ k

  Max span of 1½" pipe w/out bending = 10'

ARUP

Job No.	Sheet No.	Rev.
	6.1-7	
Member-Location		
Job Title	Drg. Ref.	
	Made By	Date	Chd.

PERIMETER BEAMS

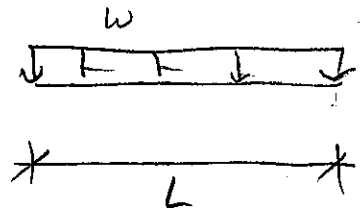

- Bending demand:

$w_D = (10psf)(2.75') = 27.5\ plf$

$w_L = (20psf)(2.75') = 55\ plf$

$w_W = (2.5psf)(2.75') = 6.88\ plf$ (downward)

(upward wind does not govern by inspection)

- 1.2D + 1.6L governs by inspection

$w_u = 120\ plf = 0.010\ k/in$

$M_u = \frac{1}{8} w_u L^2$

- Bending & axial capacity of 2" std. pipe:

$r = 0.791''$

$A = 1.00\ in^2$

$Z = 0.713\ in^3 \Rightarrow \phi M_n = 22.5\ k\ in.$

$P_u = 3.0\ k$ assumed

L	$\frac{KL}{r}$	ϕF_{cr}	ϕP_n	M_n	$P_u/\phi P_n$	$M_u/\phi M_n$	
5'	75.9	23.4	23.	4.5	0.13	0.20	✓
7'							
9'	136.5	12.1	12	14.6	0.25	0.65	✓
10'	151.7	9.82	10	18.0	0.31	0.80	NG

<u>Use 9'-0" Max Span</u>

Appendix B – Mechanical Calculations

The following pages submitted contain further Mechanical Calculations.

Halepilihonua
HVAC Load Calculations

for

U.S. Department Of Energy / NREL
2011 Solar Decathlon

Elite Software

RHVAC Residential HVAC Loads

Prepared By:

David R. Cook
Team Hawaii
U. Of Hawaii At Manoa, 2410 Campus Road
Honolulu, HI 96822

Thursday, March 03, 2011

Rhvac is an ACCA approved Manual J and Manual D computer program.
Calculations are performed per ACCA Manual J 8th Edition, Version 2, and ACCA Manual D.

Project Report

General Project Information

Project Title:	Halepilihonua
Designed By:	Team Hawaii, Solar Decathlon 2011
Project Date:	Wednesday, March 02, 2011
Client Name:	U.S. Department Of Energy / NREL
Client Address:	2011 Solar Decathlon
Client Website:	www.solardecathlon.gov
Company Name:	Team Hawaii
Company Representative:	David R. Cook
Company Address:	U. Of Hawaii At Manoa, 2410 Campus Road
Company City:	Honolulu, HI 96822
Company E-Mail Address:	drcook@hawaii.edu
Company Website:	www.solar.hawaii.edu

Design Data

Reference City:		Honolulu, Hawaii
Building Orientation:		Front door faces East
Daily Temperature Range:		Low
Latitude:	21	Degrees
Elevation:	13	ft.
Altitude Factor:	1.000	
Elevation Sensible Adj. Factor:	1.000	
Elevation Total Adj. Factor:	1.000	
Elevation Heating Adj. Factor:	1.000	
Elevation Heating Adj. Factor:	1.000	

	Outdoor Dry Bulb	Outdoor Wet Bulb	Outdoor Rel.Hum	Indoor Rel.Hum	Indoor Dry Bulb	Grains Difference
Winter:	63	59.12	80%	n/a	70	n/a
Summer:	86	73	54%	50%	75	37

Check Figures

Total Building Supply CFM:	551	CFM Per Square ft.:	0.874
Square ft. of Room Area:	630	Square ft. Per Ton:	533
Volume (ft^3) of Cond. Space:	5,040		

Building Loads

Total Heating Required Including Ventilation Air:	3,337	Btuh	3.337	MBH
Total Sensible Gain:	12,486	Btuh	88	%
Total Latent Gain:	1,688	Btuh	12	%
Total Cooling Required Including Ventilation Air:	14,174	Btuh	1.18	Tons (Based On Sensible + Latent)

Notes

Rhvac is an ACCA approved Manual J and Manual D computer program.
Calculations are performed per ACCA Manual J 8th Edition, Version 2, and ACCA Manual D.
All computed results are estimates as building use and weather may vary.
Be sure to select a unit that meets both sensible and latent loads according to the manufacturer's performance data at your design conditions.

Miscellaneous Report

System 1 Water-source Heat Pump System Input Data	Outdoor Dry Bulb	Outdoor Wet Bulb	Outdoor Rel.Hum	Indoor Rel.Hum	Indoor Dry Bulb	Grains Difference
Winter:	63	59.12	80%	n/a	70	n/a
Summer:	86	73	54%	50%	75	36.62

Duct Sizing Inputs

	Main Trunk		Runouts	
Calculate:	Yes		Yes	
Use Schedule:	Yes		Yes	
Roughness Factor:	0.00018		0.01000	
Pressure Drop:	0.1000	in.wg./100 ft.	0.1000	in.wg./100 ft.
Minimum Velocity:	650	ft./min	450	ft./min
Maximum Velocity:	900	ft./min	750	ft./min
Minimum Height:	0	in.	0	in.
Maximum Height:	0	in.	0	in.

Outside Air Data

	Winter		Summer	
Infiltration Specified:	0.210	AC/hr	0.110	AC/hr
	18	CFM	9	CFM
Infiltration Actual:	0.000	AC/hr	0.000	AC/hr
Above Grade Volume:	X 5,040	Cu.ft.	X 5,040	Cu.ft.
	0	Cu.ft./hr	0	Cu.ft./hr
	X 0.0167		X 0.0167	
Total Building Infiltration:	0	CFM	0	CFM
Total Building Ventilation:	31	CFM	31	CFM

---System 1---

Infiltration & Ventilation Sensible Gain Multiplier: 12.09 = (1.10 X 1.000 X 11.00 Summer Temp. Difference)
Infiltration & Ventilation Latent Gain Multiplier: 24.89 = (0.68 X 1.000 X 36.62 Grains Difference)
Infiltration & Ventilation Sensible Loss Multiplier: 7.70 = (1.10 X 1.000 X 7.00 Winter Temp. Difference)
Winter Infiltration Specified: 0.210 AC/hr (18 CFM), Construction: Tight
Summer Infiltration Specified: 0.110 AC/hr (9 CFM), Construction: Tight

Duct Load Factor Scenarios for System 1

No.	Type	Description	Location	Attic Ceiling	Duct Leakage	Duct Insulation	Surface Area	From [T]MDD
1	Supply		Basement	-	0.12	6	176	No
1	Return		Basement	-	0.12	6	162	No

Load Preview Report

Scope	Has AED	Net Ton	Rec Ton	ft.²/Ton	Area	Sen Gain	Lat Gain	Net Gain	Sen Loss	Min Htg CFM	Min Clg CFM	Sys Htg CFM	Sys Clg CFM	Sys Act CFM	Duct Size
Building		1.18	1.39	454	630	12,486	1,688	14,174	3,337	40	551	40	551	551	
System 1	No	1.18	1.39	454	630	12,486	1,688	14,174	3,337	40	551	40	551	551	8x13
Ventilation						375	772	1,146	239						
Duct Latent							516	516							
Zone 1					630	12,111	400	12,511	3,099	40	551	40	551	551	8x13
1-Modules A+B					225	5,434	0	5,434	1,311	17	247	17	247	247	2--6x6
2-Modules C+D					225	2,613	400	3,013	592	8	119	8	119	119	1--6x6
3-Modules E+F					180	4,064	0	4,064	1,196	16	185	16	185	185	2--6x6

Duct Size Preview

Room or Duct Name	Source	Minimum Velocity	Maximum Velocity	Rough. Factor	Design L/100	SP Loss	Duct Velocity	Duct Length	Htg Flow	Clg Flow	Act. Flow	Duct Size
System 1												
Supply Runouts												
Zone 1												
1-Modules A+B	Built-In	450	750	0	0.1		494.2		17	247	247	2--6x6
2-Modules C+D	Built-In	450	750	0	0.1		475.4		8	119	119	1--6x6
3-Modules E+F	Built-In	450	750	0	0.1		369.7		16	185	185	2--6x6
Other Ducts in System 1												
Supply Main Trunk	Built-In	650	900	0	0.1		762.6		40	551	551	8x13

Summary

System 1

Heating Flow: 40

Cooling Flow: 551

System 1 - Water-source Heat Pump System - Adequate Exposure Diversity Test

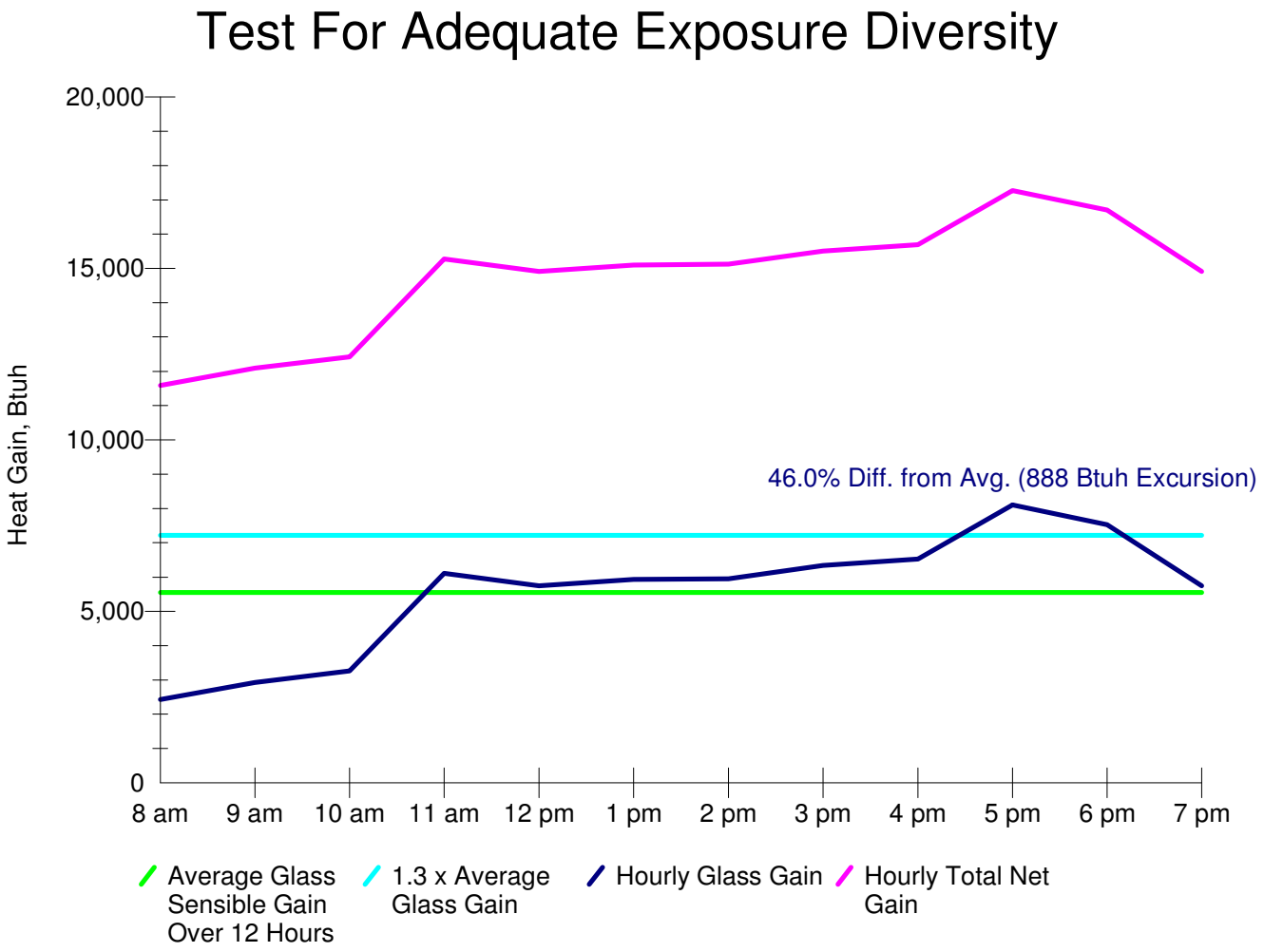

AED Calculation Summary

--- SYSTEM DOES NOT HAVE ADEQUATE EXPOSURE DIVERSITY. ---

System is on N, E, S, W rosette.
Peak load exceeds 12-hour average load by 46.0%.
AED Excursion (amount by which peak exceeds 1.3 x average): 888 Btuh

Definition: A system has adequate exposure diversity if the peak-hour glass load for the entire conditioned space does not exceed the average glass load for the entire conditioned space by more than 30 percent.

(System Concept Warning for excursion greater than 1.3 x baseline and less than 1.5 x baseline) This application has glass areas that produced relatively large heat gains for part of the day. Variable air volume devices may be required to overcome spikes in solar gain for one or more rooms. A zoned system may be required, or some rooms may require zone control (provided by individual, motorized, thermostatically controlled dampers).

System 1 - Water-source Heat Pump System - Psychrometric Chart

ZC	Zone (Room) Condition	OC	Outdoor Condition
LC	Leaving Coil Condition	EC	Entering Coil Condition
SD	Supply Duct Temperature Rise	DTF	Draw Through Fan Sensible Gain
HRV	Heat Recovery Ventilator		

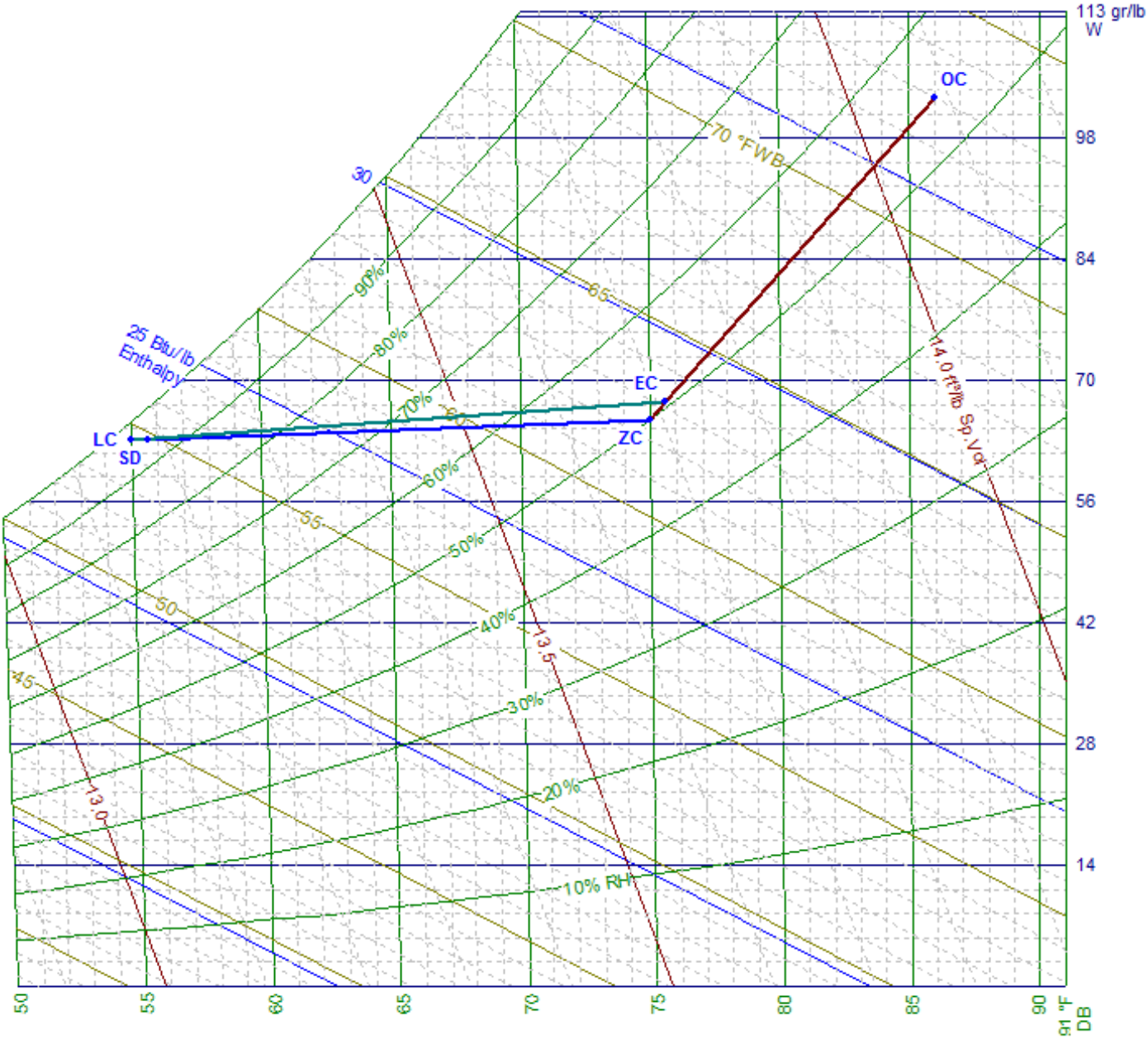

Project Bill of Materials

Part No.	Description	Req. Qty.	Qty. Unit	Unit Matl. Cost	Matl. Cost	Unit Shop Labor Hours	Unit Field Labor Hours	Total Labor Cost	Total Cost
	Ductwork Accessories								
	Subtotal - Ductwork Accessories				**$0.00**			**$0.00**	**$0.00**
	HVAC Equipment								
	Subtotal - HVAC Equipment				**$0.00**			**$0.00**	**$0.00**
	Grand Total				**$0.00**			**$0.00**	**$0.00**

Total Building Summary Loads

Component Description	Area Quan	Sen Loss	Lat Gain	Sen Gain	Total Gain
Nanawall 1: Glazing-2-pane low-e Nanawall SL35, u-value 0.7, SHGC 0.35	182	892	0	5,006	5,006
FRP Shell 1: Wall-Frame, Custom, Aerogel-filled 25mm Triple-wall Polycarbonate Panel-insulated Semi-Monocoque Shell clad in FRP	730	402	0	1,388	1,388
FRP Shell 1-zw: Roof/Ceiling-Roof Joists Between Roof Deck and Ceiling or Foam Encapsulated Roof Joists, Custom, Same construction as FRP Shell 1 walls, white membrane	630	348	0	3,483	3,483
FRP Shell 1: Floor-Over open crawl space or garage, Custom, Suspended steel-joist wooden floor	630	348	0	498	498
Subtotals for structure:		1,990	0	10,375	10,375
People:	2		400	460	860
Equipment:			0	0	0
Lighting:	0			0	0
Ductwork:		1,109	516	388	904
Infiltration: Winter CFM: 0, Summer CFM: 0		0	0	0	0
Ventilation: Winter CFM: 31, Summer CFM: 31		239	772	375	1,146
AED Excursion:		0	0	888	888
Total Building Load Totals:		3,337	1,688	12,486	14,174

Check Figures

Total Building Supply CFM:	551	CFM Per Square ft.:	0.874
Square ft. of Room Area:	630	Square ft. Per Ton:	533
Volume (ft³) of Cond. Space:	5,040		

Building Loads

Total Heating Required Including Ventilation Air:	3,337	Btuh	3.337	MBH
Total Sensible Gain:	12,486	Btuh	88	%
Total Latent Gain:	1,688	Btuh	12	%
Total Cooling Required Including Ventilation Air:	14,174	Btuh	1.18	Tons (Based On Sensible + Latent)

Notes

Rhvac is an ACCA approved Manual J and Manual D computer program.
Calculations are performed per ACCA Manual J 8th Edition, Version 2, and ACCA Manual D.
All computed results are estimates as building use and weather may vary.
Be sure to select a unit that meets both sensible and latent loads according to the manufacturer's performance data at your design conditions.

Building Pie Chart

Building Loss 3,337 Btuh

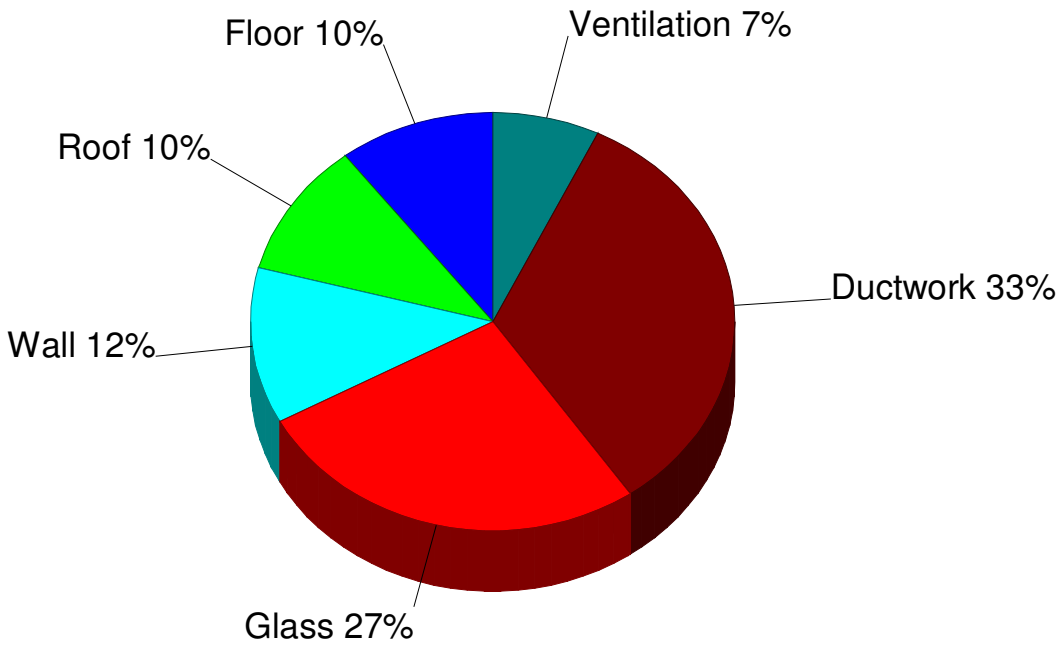

Building Gain 14,174 Btuh

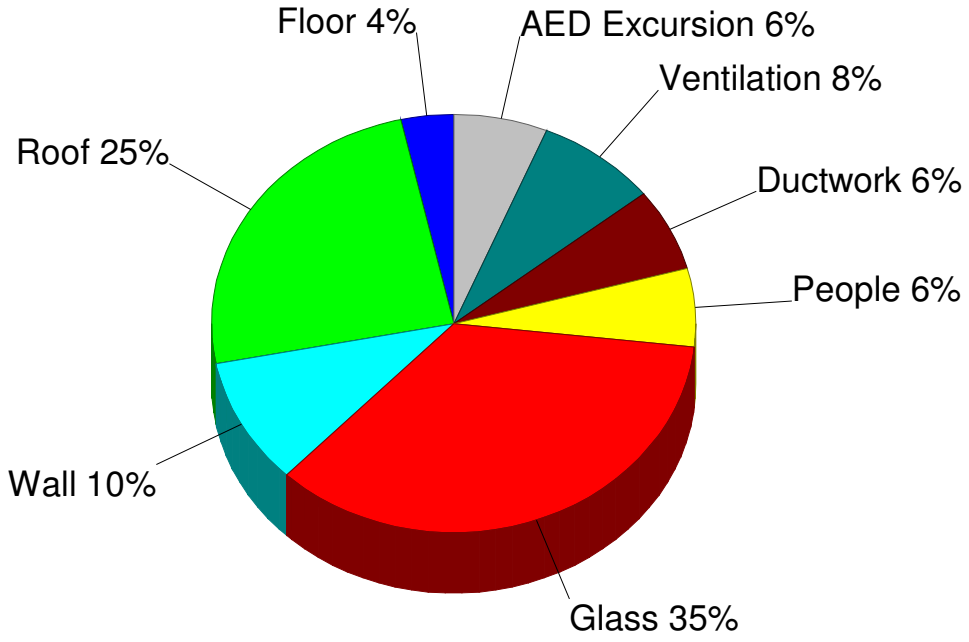

Building Bar Graph

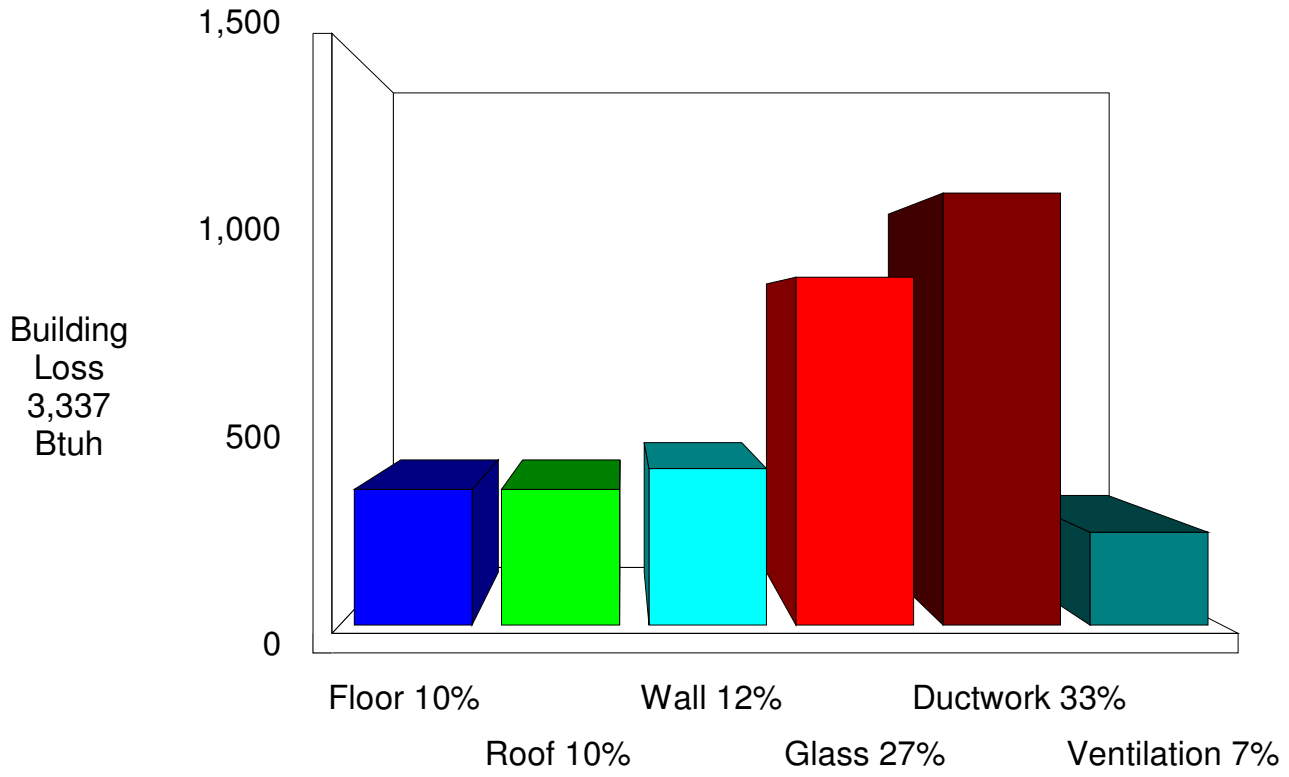

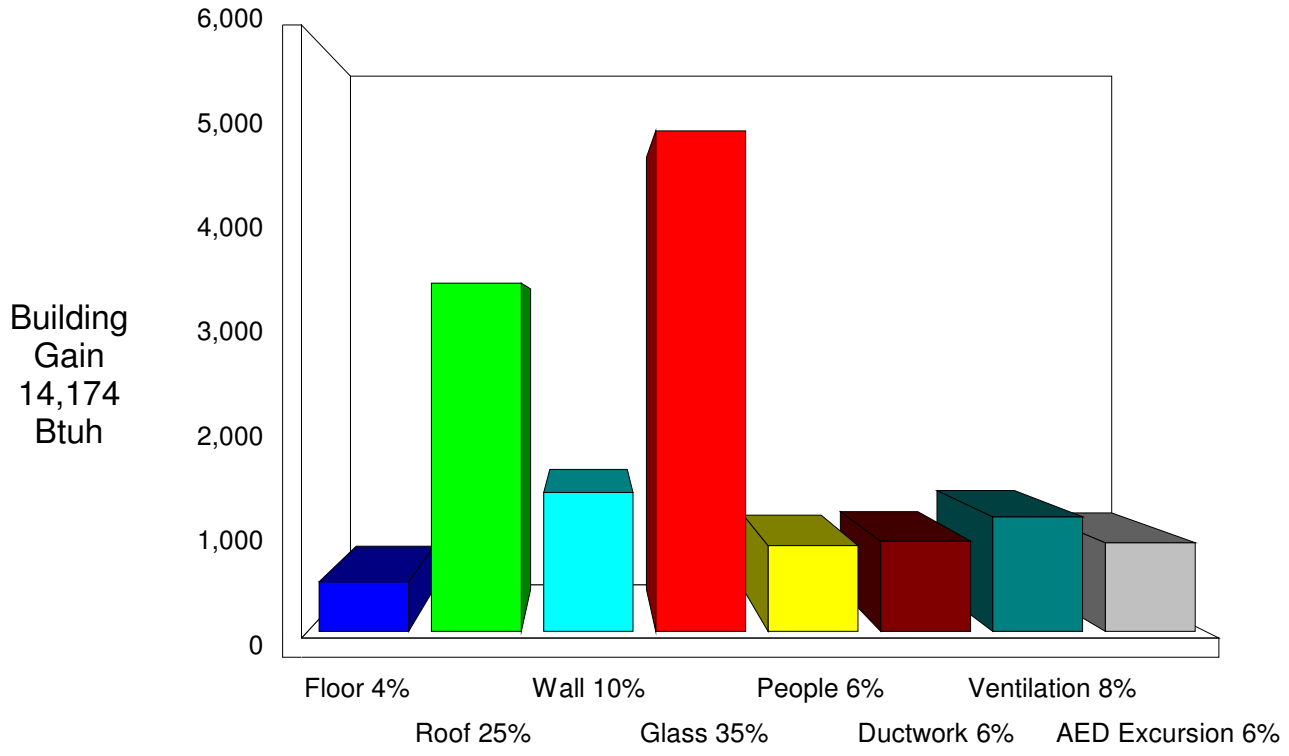

System 1 Water-source Heat Pump System Summary Loads

Component Description	Area Quan	Sen Loss	Lat Gain	Sen Gain	Total Gain
Nanawall 1: Glazing-2-pane low-e Nanawall SL35, u-value 0.7, SHGC 0.35	182	892	0	5,006	5,006
FRP Shell 1: Wall-Frame, Custom, Aerogel-filled 25mm Triple-wall Polycarbonate Panel-insulated Semi-Monocoque Shell clad in FRP	730	402	0	1,388	1,388
FRP Shell 1-zw: Roof/Ceiling-Roof Joists Between Roof Deck and Ceiling or Foam Encapsulated Roof Joists, Custom, Same construction as FRP Shell 1 walls, white membrane	630	348	0	3,483	3,483
FRP Shell 1: Floor-Over open crawl space or garage, Custom, Suspended steel-joist wooden floor	630	348	0	498	498
Subtotals for structure:		1,990	0	10,375	10,375
People:	2		400	460	860
Equipment:			0	0	0
Lighting:	0			0	0
Ductwork:		1,109	516	388	904
Infiltration: Winter CFM: 0, Summer CFM: 0		0	0	0	0
Ventilation: Winter CFM: 31, Summer CFM: 31		239	772	375	1,146
AED Excursion:		0	0	888	888
System 1 Water-source Heat Pump System Load Totals:		3,337	1,688	12,486	14,174

Check Figures

Supply CFM:	551	CFM Per Square ft.:	0.874
Square ft. of Room Area:	630	Square ft. Per Ton:	533
Volume (ft³) of Cond. Space:	5,040		

System Loads

Total Heating Required Including Ventilation Air:	3,337	Btuh	3.337	MBH
Total Sensible Gain:	12,486	Btuh	88	%
Total Latent Gain:	1,688	Btuh	12	%
Total Cooling Required Including Ventilation Air:	14,174	Btuh	1.18	Tons (Based On Sensible + Latent)

Notes

Rhvac is an ACCA approved Manual J and Manual D computer program.
Calculations are performed per ACCA Manual J 8th Edition, Version 2, and ACCA Manual D.
All computed results are estimates as building use and weather may vary.
Be sure to select a unit that meets both sensible and latent loads according to the manufacturer's performance data at your design conditions.

System 1 Water-source Heat Pump System Pie Chart

System 1
Water-source Heat
Pump System
Loss
3,337
Btuh

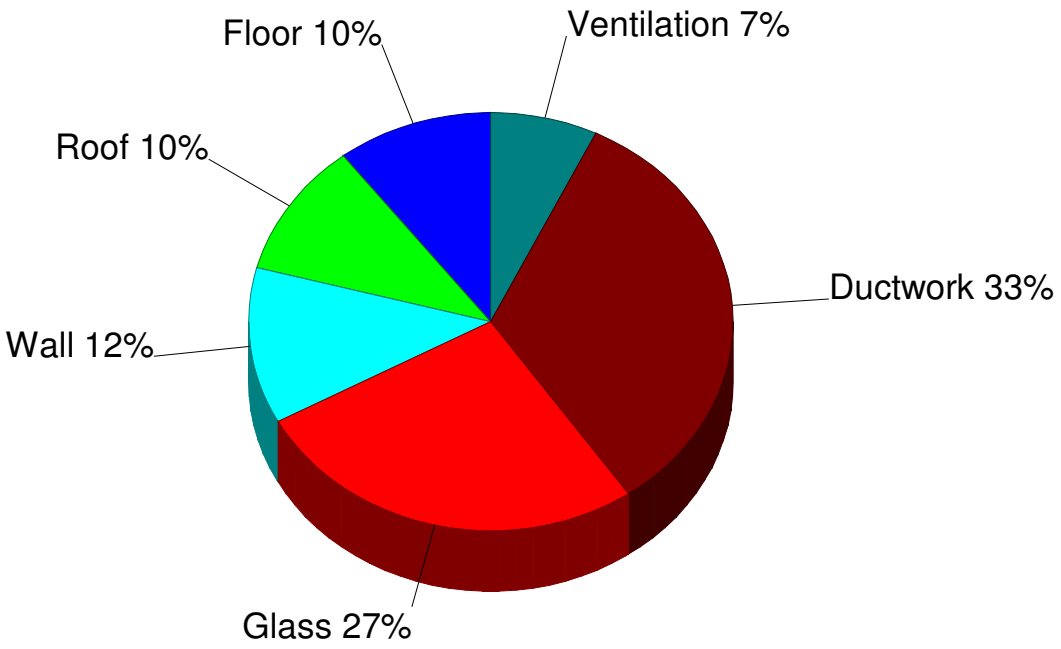

System 1
Water-source Heat
Pump System
Gain
14,174
Btuh

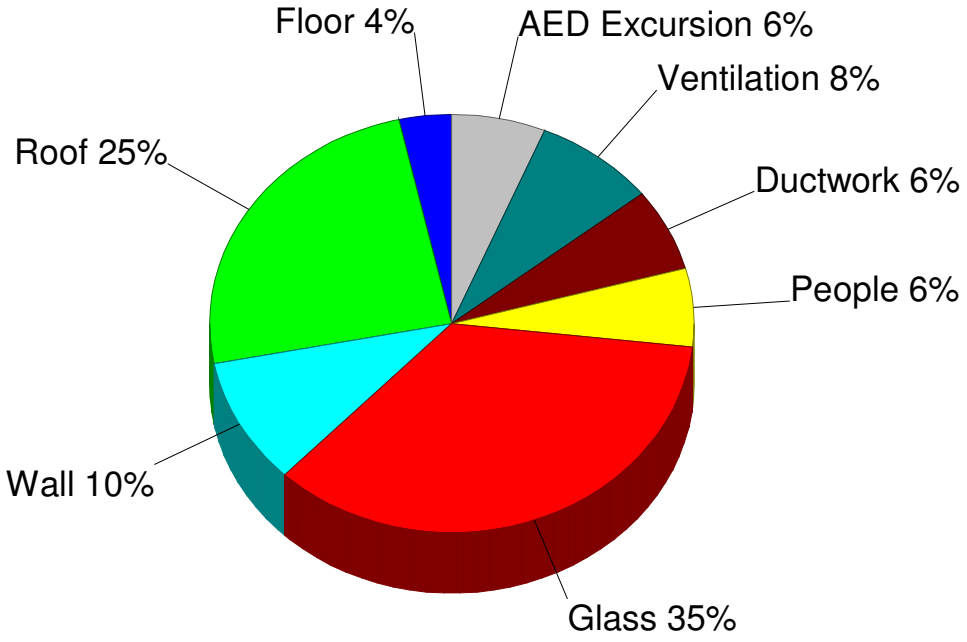

System 1 Water-source Heat Pump System Bar Graph

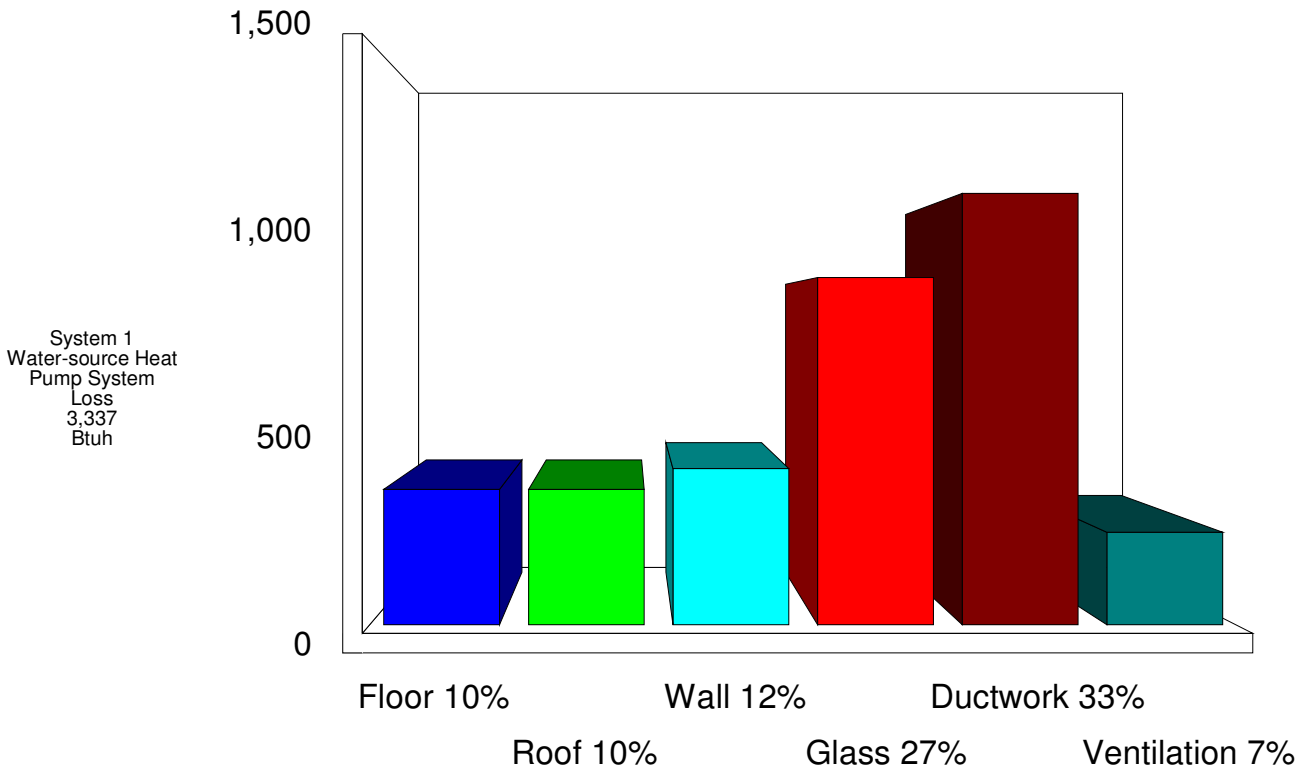

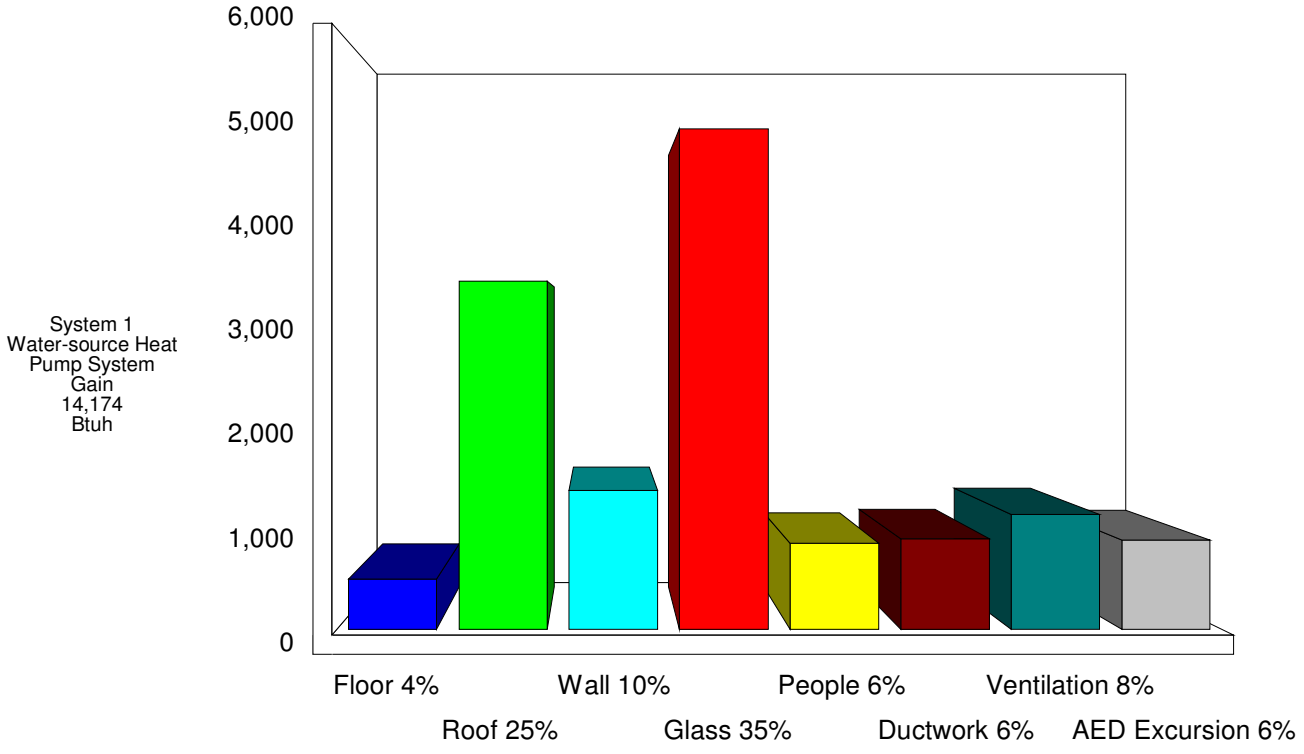

System 1 - Hourly Room Net Gain

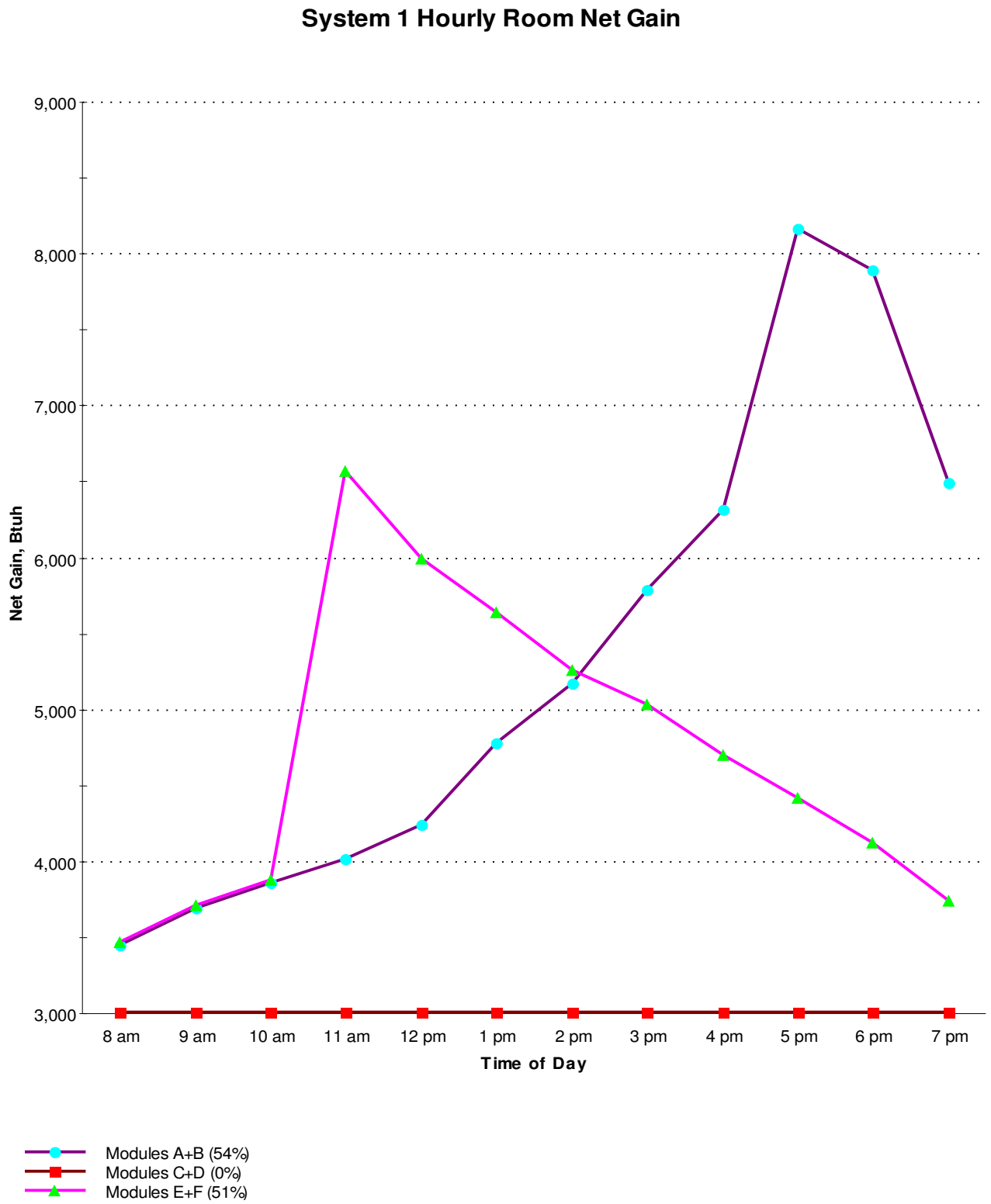

Note: Glass gain as a percent of net gain is shown in parenthesis. Although floor, roof, wall and door gains also vary throughout the day, for this graph and in Manual J glass gains are the only ones that fluctuate.

System 1, Zone 1 Summary Loads (Average Load Procedure for Rooms)

Component Description	Area Quan	Sen Loss	Lat Gain	Sen Gain	Total Gain
Nanawall 1: Glazing-2-pane low-e Nanawall SL35, u-value 0.7, SHGC 0.35	182	892	0	5,006	5,006
FRP Shell 1: Wall-Frame, Custom, Aerogel-filled 25mm Triple-wall Polycarbonate Panel-insulated Semi-Monocoque Shell clad in FRP	730	402	0	1,388	1,388
FRP Shell 1-zw: Roof/Ceiling-Roof Joists Between Roof Deck and Ceiling or Foam Encapsulated Roof Joists, Custom, Same construction as FRP Shell 1 walls, white membrane	630	348	0	3,483	3,483
FRP Shell 1: Floor-Over open crawl space or garage, Custom, Suspended steel-joist wooden floor	630	348	0	498	498
Subtotals for structure:		1,990	0	10,375	10,375
People:	2		400	460	860
Equipment:			0	0	0
Lighting:	0			0	0
Ductwork:		1,109	0	388	388
Infiltration: Winter CFM: 0, Summer CFM: 0		0	0	0	0
System 1, Zone 1 Load Totals:		3,099	400	12,111	12,511

Check Figures

Supply CFM:	551	CFM Per Square ft.:	0.874
Square ft. of Room Area:	630	Square ft. Per Ton:	604
Volume (ft³) of Cond. Space:	5,040		

Zone Loads

Total Heating Required:	3,099	Btuh	3.099	MBH
Total Sensible Gain:	12,111	Btuh	97	%
Total Latent Gain:	400	Btuh	3	%
Total Cooling Required:	12,511	Btuh	1.04	Tons (Based On Sensible + Latent)

Notes

Rhvac is an ACCA approved Manual J and Manual D computer program.
Calculations are performed per ACCA Manual J 8th Edition, Version 2, and ACCA Manual D.
All computed results are estimates as building use and weather may vary.
Be sure to select a unit that meets both sensible and latent loads according to the manufacturer's performance data at your design conditions.

System 1, Zone 1 Pie Chart

System 1, Zone 1 Loss 3,099 Btuh

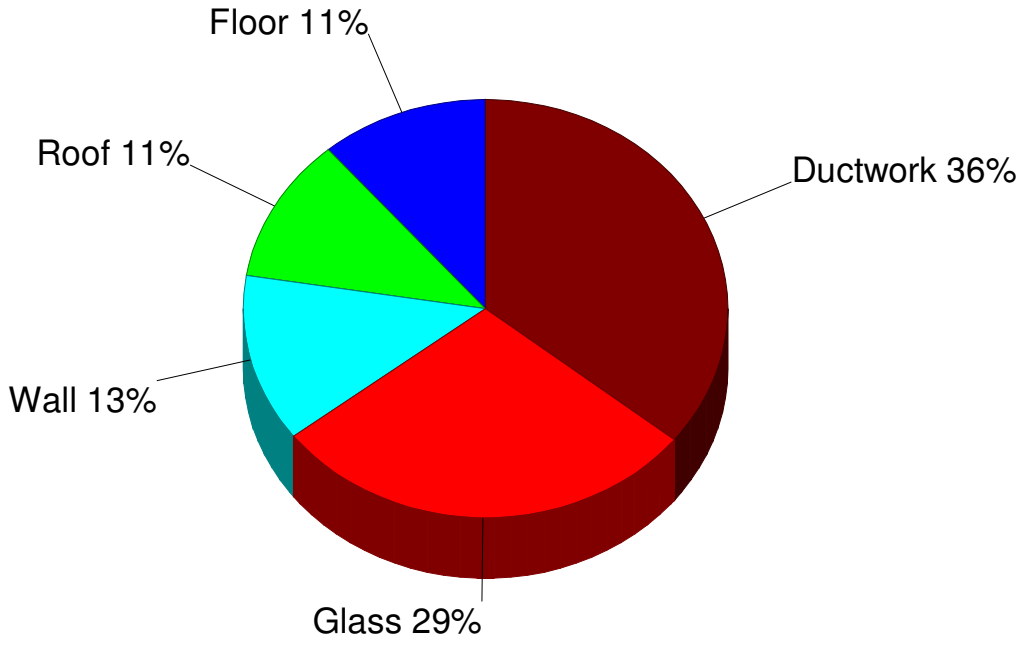

System 1, Zone 1 Gain 12,511 Btuh

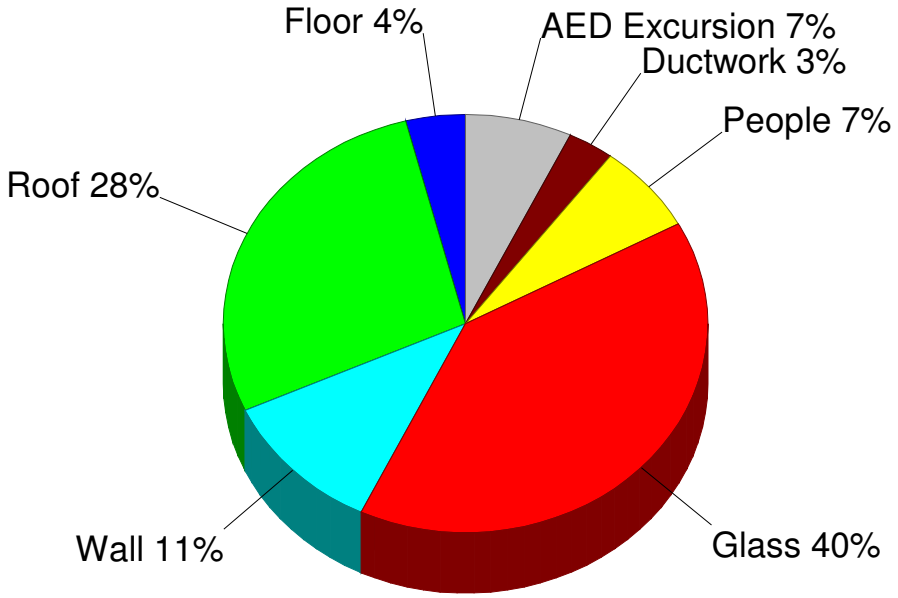

System 1, Zone 1 Bar Graph

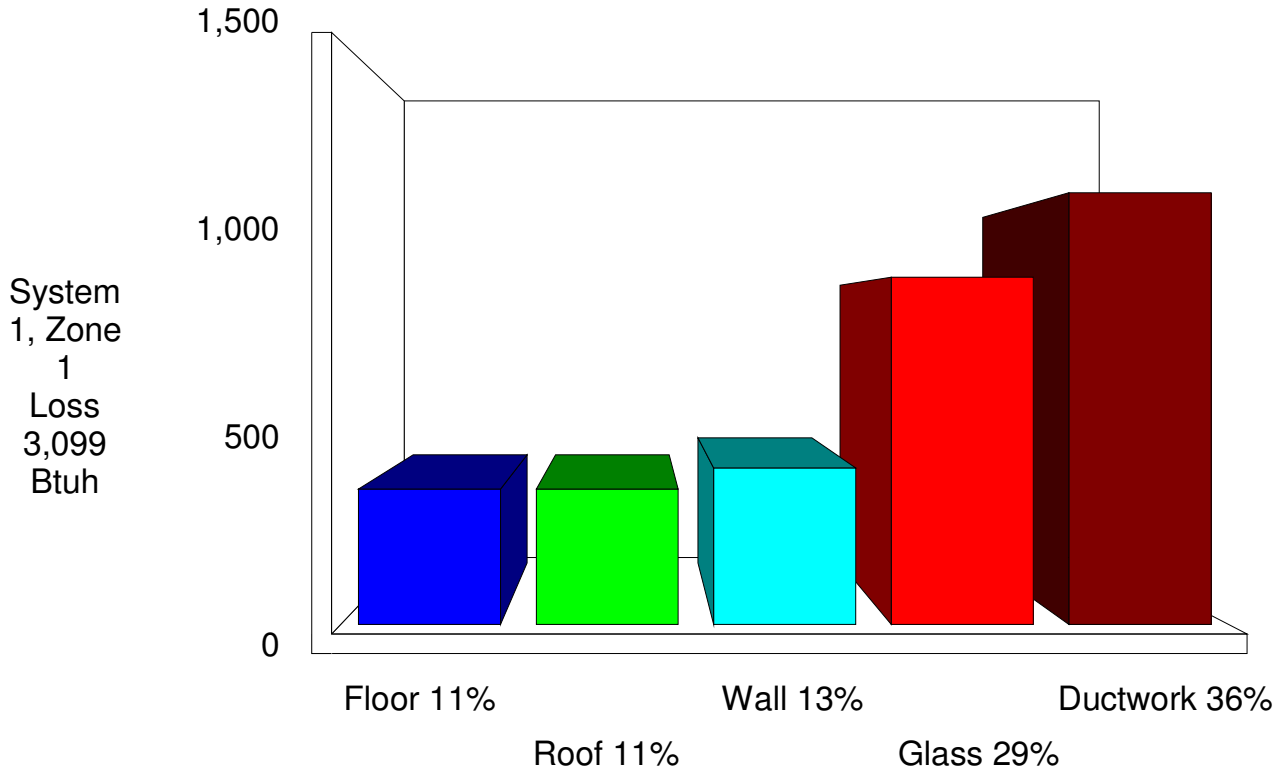

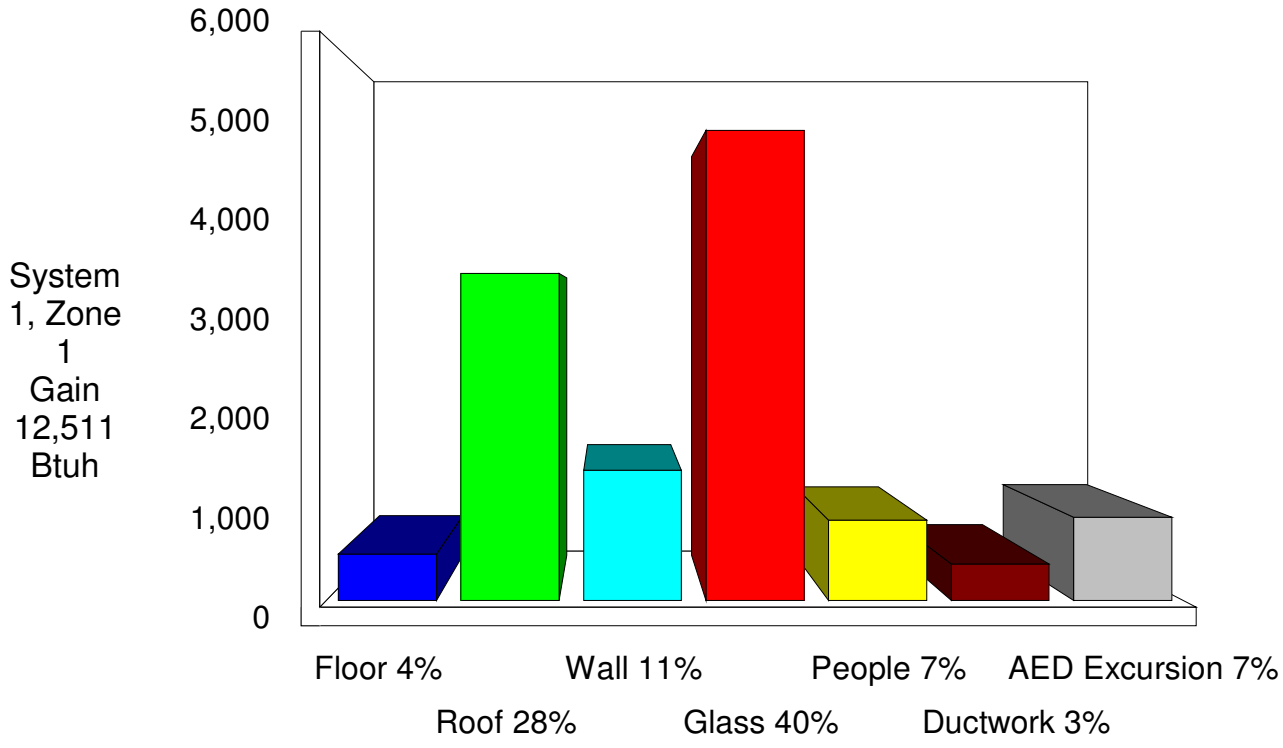

Detailed Room Loads - Room 1 - Modules A+B (Average Load Procedure)

General

Calculation Mode:	Htg. & clg.		Occurrences:	1	
Room Length:	15.0	ft.	System Number:	1	
Room Width:	15.0	ft.	Zone Number:	1	
Area:	225.0	sq.ft.	Supply Air:	247	CFM
Ceiling Height:	8.0	ft.	Supply Air Changes:	8.2	AC/hr
Volume:	1,800.0	cu.ft.	Req. Vent. Clg:	0	CFM
Number of Registers:	2		Actual Winter Vent.:	13	CFM
Runout Air:	124	CFM	Percent of Supply.:	5	%
Runout Duct Size:	6x6	in.	Actual Summer Vent.:	14	CFM
Runout Air Velocity:	494	ft./min.	Percent of Supply:	6	%
Runout Air Velocity:	494	ft./min.	Actual Winter Infil.:	0	CFM
Actual Loss:	0.157	in.wg./100 ft.	Actual Summer Infil.:	0	CFM

Item Description	Area Quantity	-U- Value	Htg HTM	Sen Loss	Clg HTM	Lat Gain	Sen Gain
N -Wall-FRP Shell 1 15 X 8	120	0.079	0.6	66	1.9	0	228
S -Wall-FRP Shell 1 15 X 8	120	0.079	0.6	66	1.9	0	228
W -Wall-FRP Shell 1 15 X 8	29	0.079	0.6	16	1.9	0	55
W -Gls-Nanawall 1 shgc-0.35 35%S	91	0.700	4.9	446	32.2	0	2,928
UP-Roof-FRP Shell 1 225 X 1	225	0.079	0.6	124	5.5	0	1,244
Floor-FRP Shell 1 1 X 225	225	0.079	0.6	124	0.8	0	178
Subtotals for Structure:				842		0	4,861
Infil.: Win.: 0.0, Sum.: 0.0	360		0.000	0	0.000	0	0
Ductwork:				469			174
AED Excursion:							399
Room Totals:				1,311		0	5,434

Detailed Room Loads - Room 2 - Modules C+D (Average Load Procedure)

General

Calculation Mode:	Htg. & clg.		Occurrences:	1	
Room Length:	15.0	ft.	System Number:	1	
Room Width:	15.0	ft.	Zone Number:	1	
Area:	225.0	sq.ft.	Supply Air:	119	CFM
Ceiling Height:	8.0	ft.	Supply Air Changes:	4.0	AC/hr
Volume:	1,800.0	cu.ft.	Req. Vent. Clg:	0	CFM
Number of Registers:	1		Actual Winter Vent.:	6	CFM
Runout Air:	119	CFM	Percent of Supply.:	5	%
Runout Duct Size:	6x6	in.	Actual Summer Vent.:	7	CFM
Runout Air Velocity:	475	ft./min.	Percent of Supply:	6	%
Runout Air Velocity:	475	ft./min.	Actual Winter Infil.:	0	CFM
Actual Loss:	0.145	in.wg./100 ft.	Actual Summer Infil.:	0	CFM

Item Description	Area Quantity	-U- Value	Htg HTM	Sen Loss	Clg HTM	Lat Gain	Sen Gain
N -Wall-FRP Shell 1 15 X 8	120	0.079	0.6	66	1.9	0	228
S -Wall-FRP Shell 1 15 X 8	120	0.079	0.6	66	1.9	0	228
UP-Roof-FRP Shell 1 225 X 1	225	0.079	0.6	124	5.5	0	1,244
Floor-FRP Shell 1 1 X 225	225	0.079	0.6	124	0.8	0	178
Subtotals for Structure:				380		0	1,878
Infil.: Win.: 0.0, Sum.: 0.0	240		0.000	0	0.000	0	0
Ductwork:				212			84
AED Excursion:							192
People: 200 lat/per, 230 sen/per:	2					400	460
Room Totals:				592		400	2,613

Detailed Room Loads - Room 3 - Modules E+F (Average Load Procedure)

General

Calculation Mode:	Htg. & clg.		Occurrences:	1	
Room Length:	12.0	ft.	System Number:	1	
Room Width:	15.0	ft.	Zone Number:	1	
Area:	180.0	sq.ft.	Supply Air:	185	CFM
Ceiling Height:	8.0	ft.	Supply Air Changes:	7.7	AC/hr
Volume:	1,440.0	cu.ft.	Req. Vent. Clg:	0	CFM
Number of Registers:	2		Actual Winter Vent.:	12	CFM
Runout Air:	92	CFM	Percent of Supply.:	6	%
Runout Duct Size:	6x6	in.	Actual Summer Vent.:	10	CFM
Runout Air Velocity:	370	ft./min.	Percent of Supply:	6	%
Runout Air Velocity:	370	ft./min.	Actual Winter Infil.:	0	CFM
Actual Loss:	0.088	in.wg./100 ft.	Actual Summer Infil.:	0	CFM

Item Description	Area Quantity	-U- Value	Htg HTM	Sen Loss	Clg HTM	Lat Gain	Sen Gain
N -Wall-FRP Shell 1 12 X 8	96	0.079	0.6	53	1.9	0	183
E -Wall-FRP Shell 1 15 X 8	29	0.079	0.6	16	1.9	0	55
S -Wall-FRP Shell 1 12 X 8	96	0.079	0.6	53	1.9	0	183
E -Gls-Nanawall 1 shgc-0.35 71%S	91	0.700	4.9	446	22.8	0	2,078
UP-Roof-FRP Shell 1 180 X 1	180	0.079	0.6	100	5.5	0	995
Floor-FRP Shell 1 1 X 180	180	0.079	0.6	100	0.8	0	142
Subtotals for Structure:				768		0	3,636
Infil.: Win.: 0.0, Sum.: 0.0	312		0.000	0	0.000	0	0
Ductwork:				428			130
AED Excursion:							298
Room Totals:				1,196		0	4,064

Room Cooling and Heating Loads Bar Graphs

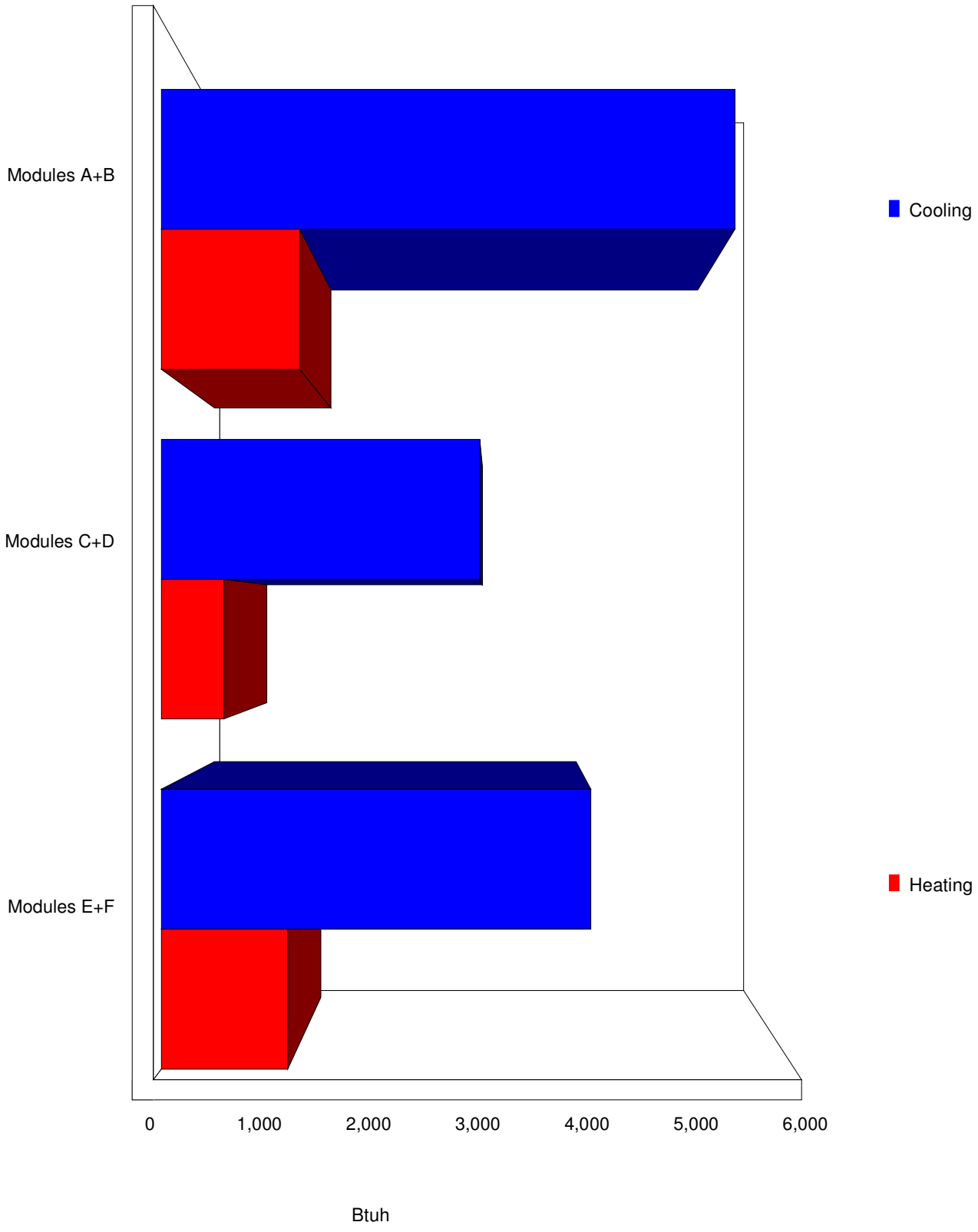

Room Cooling Loads Bar Graphs

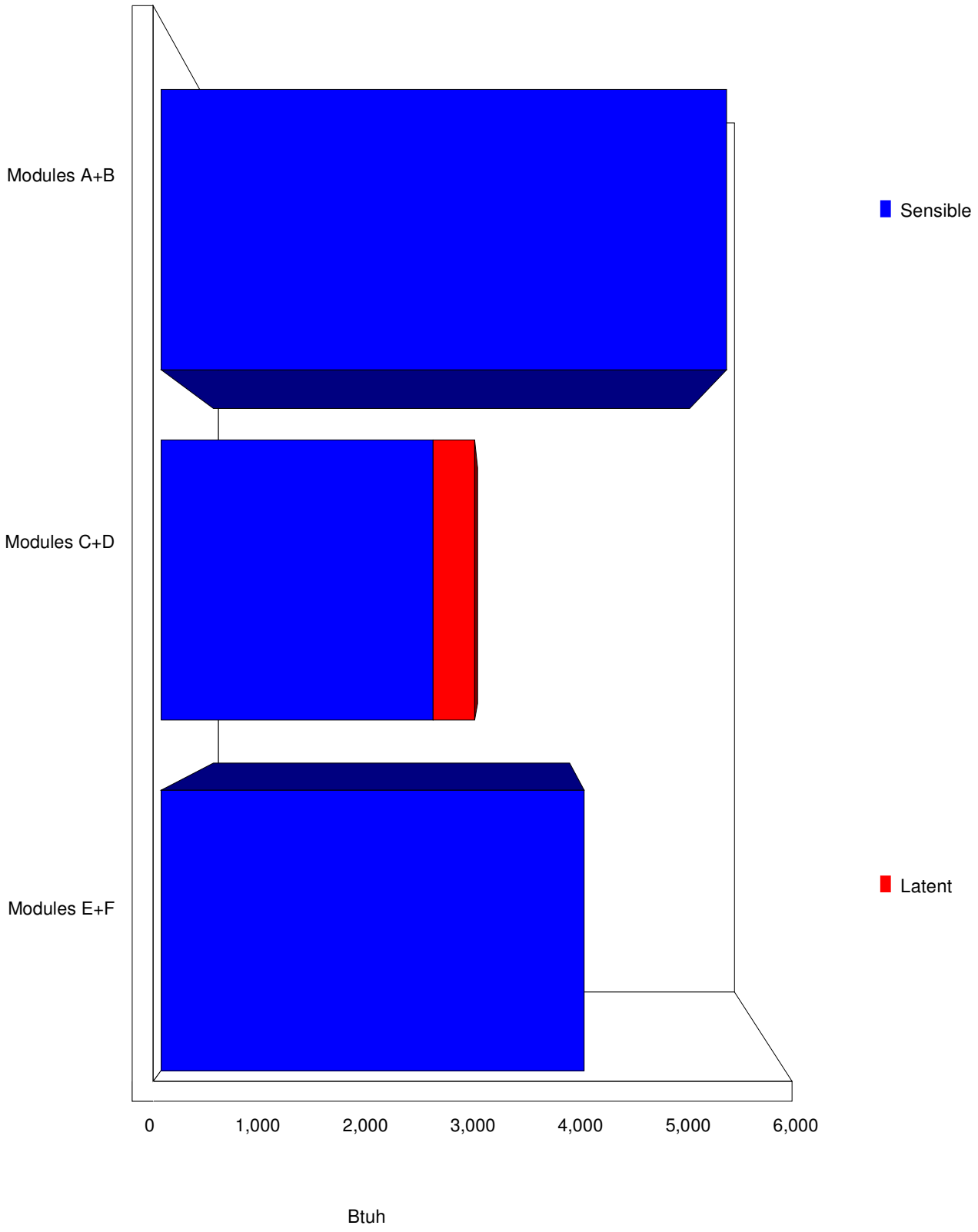

System 1 Room Load Summary

No	Room Name	Area SF	Htg Sens Btuh	Min Htg CFM	Run Duct Size	Run Duct Vel	Clg Sens Btuh	Clg Lat Btuh	Min Clg CFM	Act Sys CFM
---Zone 1---										
1	Modules A+B	225	1,311	17	2-6x6	494	5,434	0	247	247
2	Modules C+D	225	592	8	1-6x6	475	2,613	400	119	119
3	Modules E+F	180	1,196	16	2-6x6	370	4,064	0	185	185
	Ventilation		239				375	772		
	Duct Latent							516		
	System 1 total	630	3,337	40			12,486	1,688	551	551

System 1 Main Trunk Size:	8x13	in.
Velocity:	763	ft./min
Loss per 100 ft.:	0.093	in.wg

Cooling System Summary

	Cooling Tons	Sensible/Latent Split	Sensible Btuh	Latent Btuh	Total Btuh
Net Required:	1.18	88% / 12%	12,486	1,688	14,174

Equipment Data

	Heating System	Cooling System
Type:	Two Stage Ground Source HP	Two Stage Ground Source HP
Model:		
Indoor Model:		
Brand:		
Efficiency:	0	0
Comment :		0
Sound:	0	0
Capacity:	0	0
Sensible Capacity:	n/a	0 Btuh
Latent Capacity:	n/a	0 Btuh

Radiant Floor Report

Building Rotation Report

All rotation degree values in this report are clockwise with respect to the project's original orientation.
Building orientation as entered (zero degrees rotation): Front door faces East

Individual Rooms

Rm. No.	Room Name	0° Rot. CFM	45° Rot. CFM	90° Rot. CFM	135° Rot. CFM	180° Rot. CFM	225° Rot. CFM	270° Rot. CFM	315° Rot. CFM	High Duct Size
System 1:										
Zone 1:										
1	Modules A+B	247	*258	158	249	241	179	158	178	2-6x6
2	Modules C+D	119	*121	111	117	116	117	111	116	1-6x6
3	Modules E+F	185	153	140	148	180	*230	140	229	2-6x6

* Indicates highest CFM of all rotations.

Whole Building

Rotation Degrees	Front door Faces	Supply CFM	Sensible Gain	Latent Gain	Net Tons
0°	East	*551	*12,486	1,688	*1.18
45°	Southeast	532	12,078	1,690	1.15
90°	South	409	9,369	*1,693	0.92
135°	Southwest	514	11,678	1,689	1.11
180°	West	537	12,193	1,689	1.16
225°	Northwest	526	11,949	1,690	1.14
270°	North	409	9,369	1,693	0.92
315°	Northeast	523	11,882	1,690	1.13

* Indicates highest value of all rotations.

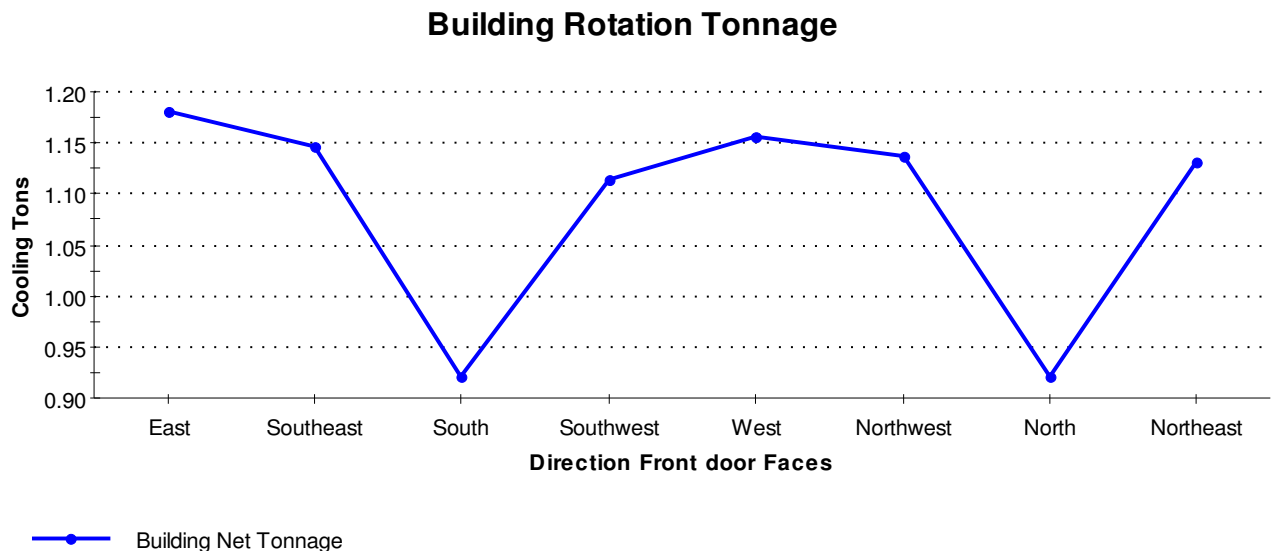

Building Rotation Report (cont'd)

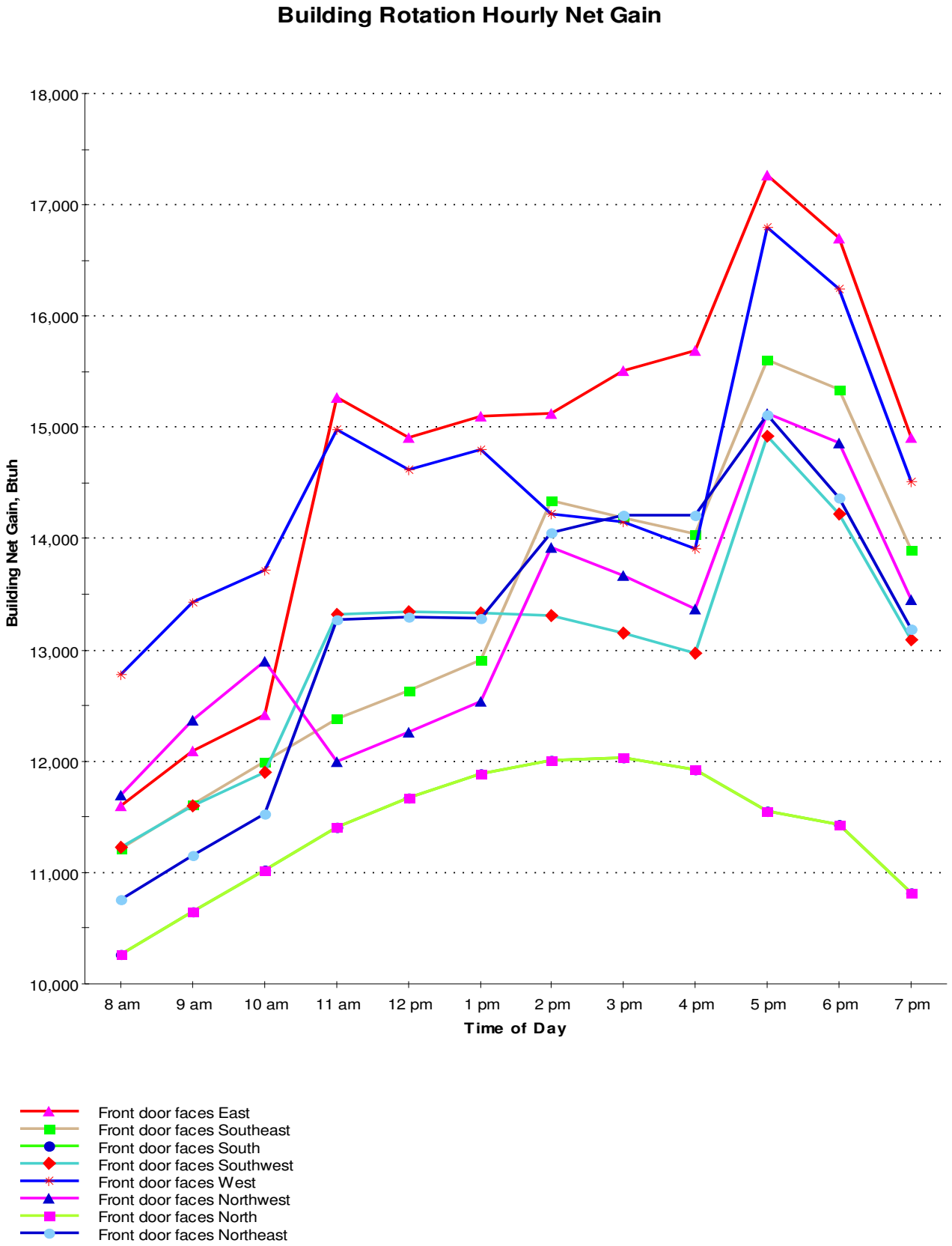

Building Rotation Duct Sizes

Room or Duct Name	Direction Front door Faces																Max Duct Size
	E		SE		S		SW		W		NW		N		NE		
	Htg Flow	Clg Flow	Htg Flow	Clg Flow	Htg Flow	Clg Flow	Htg Flow	Clg Flow	Htg Flow	Clg Flow	Htg Flow	Clg Flow	Htg Flow	Clg Flow	Htg Flow	Clg Flow	
System 1																	
Supply Runouts																	
Zone 1																	
1-Modules A+B	17	247	17	258	17	158	17	249	17	241	17	179	17	158	17	178	2--6x6
2-Modules C+D	8	119	8	121	8	111	8	117	8	116	8	117	8	111	8	116	1--6x6
3-Modules E+F	16	185	16	153	16	140	16	148	16	180	16	230	16	140	16	229	2--6x6
Other Ducts in System 1																	
Supply Main Trunk	40	551	40	532	40	409	40	514	40	537	40	526	40	409	40	523	8x13
Bldg. High Dir.: East																	
Sensible Gain: 12,486																	
Latent Gain: 1,688																	

Summary

System 1

Heating Flow: 40

Cooling Flow: 551

Residential Plans Examiner Review Form for HVAC System Design (Loads, Equipment, Ducts)

Form RPER 1.01
15 Mar 09

County, Town, Municipality, Jurisdiction
Header Information

Contractor _____

Mechanical License # _____

Building Plan # _____

Home Address (Street or Lot#, Block, Subdivision) _____

SUPPORTING DOCUMENTATION	ATTACHED	
Load calculation forms and supporting worksheets [1,2]:	Yes ☐	No ☒
OEM performance data (heating, cooling, blower):	Yes ☐	No ☒
Friction Rate Worksheet [2]:	Yes ☐	No ☒
Duct distribution system sketch:	Yes ☐	No ☒

HVAC LOAD CALCULATION (IRC M1401.3)

Design Conditions

Winter Design Conditions

Outdoor temperature	63	°F
Indoor temperature	70	°F
Total heat loss	3337	Btu

Summer Design Conditions

Outdoor temperature	86	°F
Indoor temperature	75	°F
Grains difference	37 △ Gr @ 50	% Rh
Sensible heat gain	12486	Btu
Latent heat gain	1688	Btu
Total heat gain	14174	Btu

Building Construction Information

Building

Orientation (Front door faces) East
North, East, West, South, Northeast, Northwest, Southeast, Southwest

Number of bedrooms 0

Conditioned floor area 630 Sq Ft

Number of occupants 2

Windows

Eave overhang depth 4.5 Ft

Internal shade _____
Blinds, drapes, etc

Number of skylights 0

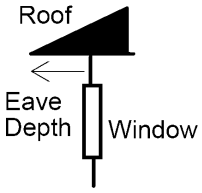

HVAC EQUIPMENT SELECTION (IRC M1401.3)

Heating Equipment Data

Equipment type Two Stage Ground Source HP
Furnace, Heat pump, Boiler, etc.

Model _____

Heating output capacity _____ Btu
Heat pumps - capacity at winter design outdoor conditions

Auxiliary heat output capacity _____ Btu

Cooling Equipment Data

Equipment type Two Stage Ground Source HP
Air Conditioner, Heat pump, etc

Model _____

Sensible cooling capacity _____ Btu

Latent cooling capacity _____ Btu

Total cooling capacity _____ Btu

Blower Data

Heating CFM 551 CFM

Cooling CFM 551 CFM

Static pressure _____ IWC
Fan's rated external static pressure for design airflow

HVAC DUCT DISTRIBUTION SYSTEM DESIGN (IRC M1601.1)

Design airflow _____ CFM

External Static Pressure (ESP) _____ IWC

Component Pressure Losses (CPL) _____ IWC

Available Static Pressure (ASP) _____ IWC
ASP = ESP - CPL

Longest supply duct: _____ Ft

Longest return duct: _____ Ft

Total Effective Length (TEL) _____ Ft

Friction Rate: _____ IWC
Friction Rate = (ASP × 100) ÷ TEL

Duct Materials Used (circle)

Trunk Duct: Duct board, Flex, Sheet metal, Lined sheet metal, Other (specify)

_____

Branch Duct: Duct board, Flex, Sheet metal, Lined sheet metal, Other (specify)

_____

I declare the load calculation, equipment selection, and duct system design were rigorously performed based on the building plan listed above, I understand the claims made on these forms will be subject to review and verification.

Contractor's Printed Name _____ Date _____

Contractor's Signature _____

Reserved for use by County, Town, Municipality, or Authority having jurisdiction.

[1] If abridged version of Manual J is used for load calculation, then verify residence meets requirements, see Abridged Edition Checklist on page 13 of instructions.
[2] Supporting documentation shall use ACCA approved forms or shall use reports and worksheets from approved ACCA software vendors, see list on page 2 of instructions.

Residential Plans Examiner Review Form for HVAC System Design (Loads, Equipment, Ducts)

Form RPER 1.01
15 Mar 09

County, Town, Municipality, Jurisdiction
Header Information

Contractor _____

Mechanical License # _____

Building Plan # _____

Home Address (Street or Lot#, Block, Subdivision) _____

SUPPORTING DOCUMENTATION	ATTACHED	
Load calculation forms and supporting worksheets [1,2]:	Yes ☐	No ☐
OEM performance data (heating, cooling, blower):	Yes ☐	No ☐
Friction Rate Worksheet [2]:	Yes ☐	No ☐
Duct distribution system sketch:	Yes ☐	No ☐

HVAC LOAD CALCULATION (IRC M1401.3)

Design Conditions

Winter Design Conditions

Outdoor temperature _____ °F

Indoor temperature _____ °F

Total heat loss _____ Btu

Summer Design Conditions

Outdoor temperature _____ °F

Indoor temperature _____ °F

Grains difference _____ △ Gr @ _____ % Rh

Sensible heat gain _____ Btu

Latent heat gain _____ Btu

Total heat gain _____ Btu

Building Construction Information

Building

Orientation (Front door faces) _____

North, East, West, South, Northeast, Northwest, Southeast, Southwest

Number of bedrooms _____

Conditioned floor area _____ Sq Ft

Number of occupants _____

Windows

Eave overhang depth _____ Ft

Internal shade _____

Blinds, drapes, etc

Number of skylights _____

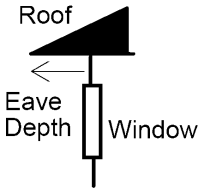

HVAC EQUIPMENT SELECTION (IRC M1401.3)

Heating Equipment Data

Equipment type _____

Furnace, Heat pump, Boiler, etc.

Model _____

Heating output capacity _____ Btu

Heat pumps - capacity at winter design outdoor conditions

Auxiliary heat output capacity _____ Btu

Cooling Equipment Data

Equipment type _____

Air Conditioner, Heat pump, etc

Model _____

Sensible cooling capacity _____ Btu

Latent cooling capacity _____ Btu

Total cooling capacity _____ Btu

Blower Data

Heating CFM _____ CFM

Cooling CFM _____ CFM

Static pressure _____ IWC

Fan's rated external static pressure for design airflow

HVAC DUCT DISTRIBUTION SYSTEM DESIGN (IRC M1601.1)

Design airflow _____ CFM

External Static Pressure (ESP) _____ IWC

Component Pressure Losses (CPL) _____ IWC

Available Static Pressure (ASP) _____ IWC

ASP = ESP - CPL

Longest supply duct: _____ Ft

Longest return duct: _____ Ft

Total Effective Length (TEL) _____ Ft

Friction Rate: _____ IWC

Friction Rate = (ASP × 100) ÷ TEL

Duct Materials Used (circle)

Trunk Duct: Duct board, Flex, Sheet metal, Lined sheet metal, Other (specify)

_____

Branch Duct: Duct board, Flex, Sheet metal, Lined sheet metal, Other (specify)

_____

I declare the load calculation, equipment selection, and duct system design were rigorously performed based on the building plan listed above, I understand the claims made on these forms will be subject to review and verification.

Contractor's Printed Name _____ Date _____

Contractor's Signature _____

Reserved for use by County, Town, Municipality, or Authority having jurisdiction.

[1] If abridged version of Manual J is used for load calculation, then verify residence meets requirements, see Abridged Edition Checklist on page 13 of instructions.

[2] Supporting documentation shall use ACCA approved forms or shall use reports and worksheets from approved ACCA software vendors, see list on page 2 of instructions.

THERMAL ENGINEERING CORPORATION
HYDRAULIC DESIGN INFORMATION SHEET

Name: **Supply Calculations - Fire Sprinklers**
Location: **University of Hawaii at Manoa**

Date: **January 06, 2011**
System No.:
Contract No.:
Drawing No.:

Building: **UH Solar Decathlon Residence**
Contractor:
Calculated by:
File Name: **solar decathlon 2 head PEX r5.the**
Construction: ☒ Combustible ☐ Noncombustible
Ceiling Height: **Varies** ft
Occupancy: **Single Family Residence**
AHJ: **Department of Energy**

SYSTEM DESIGN

☐ NFPA 13: ☐ Light Hazard ☐ Ordinary Hazard Group: ☐ Extra Hazard Group:
Figure: Curve:
☐ Other (Specify): **NFPA 13D Two Head Sprinkler Design 18 x 18 spacing; 19 gpm minimum flow**
☐ Specific Rulling: **Manufacturer's listed criteria for the sprinklers**
Made By: Date:

Area of Sprinkler Operation: sqft
Density: gpm/sqft
Area per Sprinkler: **324** sqft
Hose Allowance Inside: **0** gpm
Hose Allowance Outside: **0** gpm
Rack Sprinkler Allowance: gpm

System Type: ☐ Wet ☐ Dry ☐ Deluge ☐ Pre-Action
SPRINKLER or NOZZLE
Make: **TYCO** Model: **LFII**
Size: in K-factor: **4.9**
Temperature Rating: **155** °F

CALCULATION SUMMARY

Flow Required: **47.51** gpm Pressure Required: **0.01** psi At:
"C" Factor Used: Overhead: Underground:

WATER SUPPLY

WATER FLOW TEST
Date:
Time:
Static: psi
Residual: psi
Flowing: gpm
Elevation: ft
Location:
Source of Information:

PUMP DATA
Rated Capacity: gpm
At: psi
Elevation: ft

TANK OR RESERVOIR
Capacity: gals
Elevation: ft

WELL
Proof Flow: gpm

COMMODITY STORAGE

Commodity: Class: Location:
Storage Height: Area: Aisle Width:
Storage Method: Solid Pile: % Palletized: % Rack: %

RACK STORAGE

☐ Single Row ☐ Conventional Pallet ☐ Automatic Storage ☐ Encapsulated
☐ Double Row ☐ Slave Pallet ☐ Solid Shelving ☐ Nonencapsulated
☐ Multiple Row ☐ Open

FLUE SPACING
Longitudinal: in Transverse: in

CLEARANCE FROM TOP OF STORAGE TO CEILING
ft in

Horizontal Barriers Provided:

Hydraulic Summary

WATER SUPPLY INFORMATION:

Static (psi):	0.02
Residual (psi):	0.01
@ (gpm):	50.00
Hose (gpm):	0.00
System req. (gpm):	47.51
@ (psi):	0.01

A supply calculation has been performed. All pressures and flows represent the maximum values that the water supply(s) can deliver.

Maximum velocity in the system is: 17.47 ft/sec in the pipe between Nodes: 5 and 6

Continuity at all nodes satisfied to: 0.10 gpm

Pipe Type Legend

PX = PEX
CL = Copper Type L

Fitting Type Legend

CV = Swing check valve

NOTES:

Node	Pressure psi	Flow gpm	Hose gpm	Elevation feet	K-factor gpm/(psi)½	Area sqft	Density gpm/sqft
1	21.66	22.80		10.000	4.90	324.00	0.070
2	23.04	0.00		10.170			
3	25.41	24.70		10.000	4.90	324.00	0.076
4	26.16	0.00		10.170			
5	36.70	0.00		0.750			
6	48.30	0.00		0.750			
7	53.12	0.00		0.500			
PUMPDISC	56.50	0.00		0.500			
PUMPSUCT	-0.12	0.00		0.500			
SOURCE	0.01	47.51		0.500	Source		

Node Node	Node Flow Node Flow Pipe Flow	K-factor K-factor	Elevation Elevation	Pressure Pressure	Diameter HWC Velocity	Fittings	Length Eqv Length Ttl Length	Fric Loss Elev Loss Ttl FL
1	22.80	4.90	10.00	21.66	0.863		5.100	0.284
2	0.00		10.17	23.04	150		0.000	-0.07
	22.80				12.51		5.100	1.45
2	0.00		10.17	23.04	0.863		11.000	0.284
4	0.00		10.17	26.16	150		0.000	0.00
	22.80				12.51		11.000	3.12
3	24.70	4.90	10.00	25.41	0.863		2.500	0.329
4	0.00		10.17	26.16	150		0.000	-0.07
	24.70				13.55		2.500	0.82
4	0.00		10.17	26.16	1.054		15.500	0.417
5	0.00		0.75	36.70	150		0.000	4.08
	47.51				17.47		15.500	6.46
5	0.00		0.75	36.70	1.054		27.800	0.417
6	0.00		0.75	48.30	150		0.000	0.00
	47.51				17.47		27.800	11.59
6	0.00		0.75	48.30	1.054		11.300	0.417
7	0.00		0.50	53.12	150		0.000	0.11
	47.51				17.47		11.300	4.71
7	0.00		0.50	53.12	1.265		12.800	0.171
PUMPDISC	0.00		0.50	56.50	150	CV	6.924	0.00
	47.51				12.13		19.720	3.38
PUMPSUCT	0.00		0.50	-0.12				
PUMPDISC	0.00		0.50	56.50				0.00
	47.51	at		56.62		Fire Pump		
PUMPSUCT	0.00		0.50	-0.12	1.505		1.800	0.074
SOURCE	47.51	Source	0.50	0.01	150		0.000	0.00
	47.51				8.57		1.800	0.13

Units Legend

Flow = gpm
Elevation = feet
Pressure = psi
Diameter = inches

Velocity = ft/sec
Length,
Eqv Length,
Ttl Length = feet

Fric Loss = psi/ft
Elev Loss,
Ttl FL = psi

Begin Node		End Node	Flow gpm	Diameter inches	Type	Fittings	C-Value	Length feet	Eqv Length feet	Ttl Length feet	Fric Loss psi/ft	Ttl FL psi	Elev Loss psi	Velocity ft/s
1	<	2	22.80	0.863	PX		150	5.100	0.000	5.100	0.284	1.45	-0.07	12.51
2	<	4	22.80	0.863	PX		150	11.000	0.000	11.000	0.284	3.12	0.00	12.51
3	<	4	24.70	0.863	PX		150	2.500	0.000	2.500	0.329	0.82	-0.07	13.55
4	<	5	47.51	1.054	PX		150	15.500	0.000	15.500	0.417	6.46	4.08	17.47
5	<	6	47.51	1.054	PX		150	27.800	0.000	27.800	0.417	11.59	0.00	17.47
6	<	7	47.51	1.054	PX		150	11.300	0.000	11.300	0.417	4.71	0.11	17.47
7	<	PUMPDISC	47.51	1.265	CL	CV	150	12.800	6.924	19.720	0.171	3.38	0.00	12.13
PUMPSUCT	>	PUMPDISC	47.51											
The Pump in the preceding pipe accounts for a pressure increase of:							56.62 psi.							
PUMPSUCT	<	SOURCE	47.51	1.505	CL		150	1.800	0.000	1.800	0.074	0.13	0.00	8.57

Appendix C – Manufacturer's Submittals/Data Sheets

The Following pages contain Manufacturer's Specifications sheets for Mechanical, and Electrical Components.

Square-Duct® Wireways

Catalog
5100CT0101R10/08

2008

Class 5100

CONTENTS

Wireway Offerings 3
General Purpose—NEMA Type 1 Painted Wireway 5
Oiltight—NEMA Type 12 Wireway 13
Raintight—NEMA Type 3R Wireway 23
Raintight—NEMA Type 3R Trough 27

SQUARE D

by Schneider Electric

Schneider Electric

Wireway Offerings

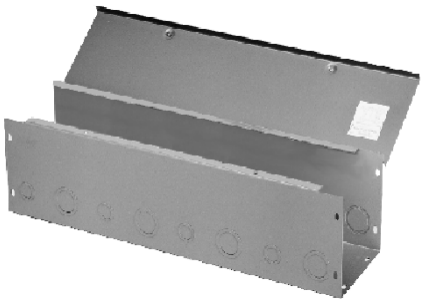

General Purpose—NEMA Type 1 Painted Wireway on page 5

Oiltight—NEMA Type 12 Wireway on page 13

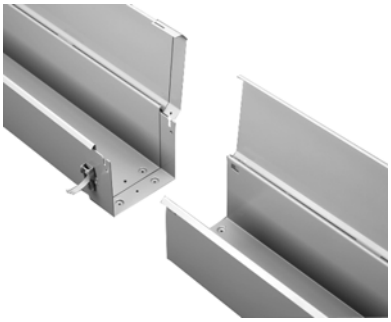

Raintight—NEMA Type 3R Wireway on page 23

Raintight—NEMA Type 3R Trough on page 27

(Clockwise from top): Oiltight—NEMA Type 12 Wireway Tee, Flange Gasket, Connector, Barriers with Brackets, 90° Elbow

Schneider Electric offers wireway for general purpose, oiltight, raintight, and industrial uses. All wireway is UL Listed under file E27524, 870, and CSA file.

Wireway may be used for a variety of applications and, in most case,s can be installed faster and at less expense than conduit. Applications include:

- Incoming cable runs and feeder circuits from switchboards to power and lighting panels
- Distribution of power in industrial plants
- Ganging equipment such as motor control, safety switches, and metering equipment
- Vertical runs of cable in elevator shafts

When comparing wireway with conduit, wireway has distinct advantages. Wireway:

- Weighs less and is reusable
- Is easier to install
- Allows conductors to be laid in
- Makes additions to the wiring system easier
- Makes provisions for tapoffs

Application and General Information

Wireway is designed to protect electrical wiring from dust, dirt, oil, and water. It is also designed to carry electrical feeders, branch circuits, and other groups of conductors. Most sections and fittings are completely open on one side so wires and cables can be laid in along an entire wireway run. No pulling through of wires or cables is required with most designs.

The Square D® Wireway products, manufactured by Schneider Electric, are available in the following types:

- General Purpose—NEMA Type 1 Painted Wireway
- Oiltight—NEMA Type 12 Wireway
- Raintight—NEMA Type 3R Wireway
- Raintight—NEMA Type 3R Trough

General Purpose—NEMA Type 1 Wireway

© 1986–2008 Schneider Electric
All Rights Reserved

General Purpose—NEMA Type 1 Painted Wireway

Application

General Purpose—NEMA Type 1 Painted Wireway is designed to protect electrical wiring from dust, dirt, oil, and water. All sections and fittings are completely open on one side so wires and cables can be laid in along an entire wireway run. No pulling through of wires or cables is required with this design.

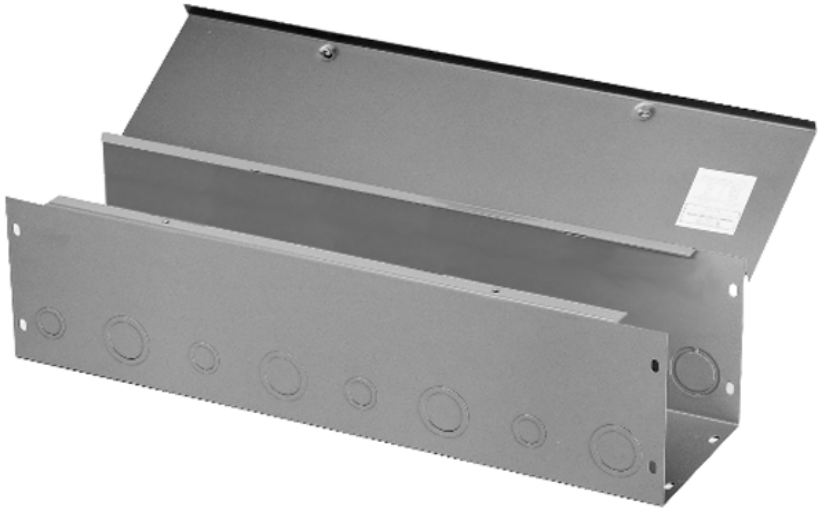

General Purpose—NEMA Type 1 Painted Wireway

A complete selection of sections and fittings is available in six sizes:

Inches	Millimeters
2.50 x 2.50	64 x 64
4.00 x 4.00	102 x 102
6.00 x 6.00	152 x 152
8.00 x 8.00	203 x 203
10.00 x 10.00	254 x 254
12.00 x 12.00	305 x 305

© 1986–2008 Schneider Electric
All Rights Reserved

Construction

General Purpose—NEMA Type 1 Painted Wireway construction consists of:

- 16 gauge galvanized steel covers and bodies in sizes:
  - 2.50 in. x 2.50 in. (64 mm x 64 mm)
  - 4.00 in. x 4.00 in. (102 mm x 102 mm)
  - 6.00 in. x 6.00 in. (152 mm x 152 mm)
- 14 gauge galvanized steel covers and bodies in sizes:
  - 8.00 in. x 8.00 in. (203 mm x 203 mm)
  - 10.00 in. x 10.00 in. (254 mm x 254 mm)
  - 12.00 in. x 12.00 in. (305 mm x 305 mm)
- Available with knockouts or without knockouts in sizes:
  - 2.50 in. x 2.50 in. (64 mm x 64 mm)
  - 4.00 in. x 4.00 in. (102 mm x 102 mm)
  - 6.00 in. x 6.00 in. (152 mm x 152 mm)
- Available without knockouts in sizes:
  - 8.00 in. x 8.00 in. (203 mm x 203 mm)
  - 10.00 in. x 10.00 in. (254 mm x 254 mm)
  - 12.00 in. x 12.00 in. (305 mm x 305 mm)
- Patented hidden hinge permits the screw-cover arrangement to be converted to a hinge-cover system on all sizes except 12.00 in. x 12.00 in. (305 mm x 305 mm), where hold-down screws are on BOTH sides of the wireway
- Open-top assembly protection for wire and cable insulation that could be damaged in a pull-through wiring system
- Knockouts on wireway sides
- Adapters available for connection to other brands of wireway

© 1986–2008 Schneider Electric
All Rights Reserved

Finish

General Purpose—NEMA Type 1 Painted Wireway is furnished in ANSI 49 gray polyester powder finish inside and out over phosphatized surfaces.

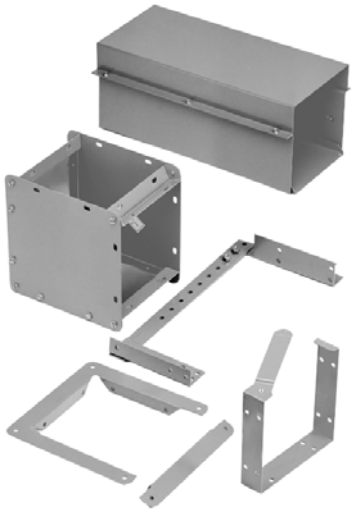

Various Components for Type 1 Wireway

Industry Standards

General Purpose—NEMA Type 1 Painted Wireway is in compliance with the following industry standards:

- UL Listed to File E27524, 870
- NEMA/EEMAC Type 1
- CSA Listed to File LL42184, Type 1
- IEC 60529, IP30

Accessories

Touch-up paint PK49SP

© 1986–2008 Schneider Electric
All Rights Reserved

Catalog Numbers—Type LDB ANSI 49 Gray Polyester Powder Finish

Components	2.50 x 2.50 in. (64 x 64 mm)		4.00 x 4.00 in. (102 x 102 mm)		6.00. x 6.00 in. (152 x 152 mm)		8.00 x 8.00 in. (203 x 203 mm)	10.00 x 10.00 in. (254 x 254 mm)	12.00 x 12.00 in. (305 x 305 mm)
	Catalog Number		Catalog Number		Catalog Number		Catalog Number	Catalog Number	Catalog Number
	With Knockouts	Without Knockouts	With Knockouts	Without Knockouts	With Knockouts	Without Knockouts	Without Knockouts	Without Knockouts	Without Knockouts
1 ft Length	LDB21KO	LDB21	LDB41KO	LDB41	LDB61KO	LDB61	LDB81	LDB101	LDB121
2 ft Length	LDB22KO	LDB22	LDB42KO	LDB42	LDB62KO	LDB62	LDB82	LDB102	LDB122
3 ft Length	LDB23KO	LDB23	LDB43KO	LDB43	LDB63KO	LDB63	LDB83	LDB103	LDB123
4 ft Length	LDB24KO	LDB24	LDB44KO	LDB44	LDB64KO	LDB64	LDB84	LDB104	LDB124
5 ft Length	LDB25KO	LDB25	LDB45KO	LDB45	LDB65KO	LDB65	LDB85	LDB105	LDB125
6 ft Length	—	—	LDB46KO	LDB46	LDB66KO	LDB66	LDB86	LDB106	—
10 ft Length	LDB210KO	LDB210	LDB410KO	LDB410	LDB610KO	LDB610	LDB810	LDB1010	LDB1210
90° Elbow	—	LDB290L	—	LDB490L	—	LDB690L	LDB890L	LDB1090L	LDB1290L
90° Sweep Elbow	—	LDB290LS	—	LDB490LS	—	LDB690LS	LDB890LS	LDB1090LS	LDB1290LS
45° Elbow	—	LDB245L	—	LDB445L	—	LDB645L	LDB845L	LDB1045L	LDB1245L
Tee	—	LDB2T	—	LDB4T	—	LDB6T	LDB8T	LDB10T	LDB12T
Junction Box	—	LDB2J	—	LDB4J	—	LDB6J	LDB8J	LDB10J	LDB12J
Telescope Fitting	—	LDB2TF	—	LDB4TF	—	LDB6TF	LDB8TF	LDB10TF	LDB12TF
Connector†	—	LDB2C	—	LDB4C	—	LDB6C	LDB8C	LDB10C	LDB12C
Drop Bracket Hanger	—	LDB2H	—	LDB4H	—	LDB6H	LDB8H	LDB10H	LDB12H
Support Hanger	—	LDB2SH	—	LDB4SH	—	LDB6SH	LDB8SH	LDB10SH	LDB12SH
Closing Plate	LDB2CPKO	LDB2CP	LDB4CPKO	LDB4CP	LDB6CPKO	LDB6CP	LDB8CP♦	LDB10CP♦	LDB12CP♦
Panel Adapter	—	LDB2A	—	LDB4A	—	LDB6A	LDB8A	LDB10A	LDB12A
Open Adapter	—	LDB2OA	—	LDB4OA	—	LDB6OA	LDB8OA	LDB10OA	LDB12OA
Reducer	—	—	—	LDB42R	—	LDB64R	LDB86R	LDB108R	LDB1210R
	—	—	—	—	—	—	—	—	LDB128R
Adapter to “LD” ‡	—	LDB2GASK	—	LDB4GAS	—	LDB6GAS	LDB8GASK	LDB10GASK	—

† Add connectors for all lengths and fittings, except closing plates, reducers, ducts, and adapters.

♦ These closing plates also available with knockout. Add “KO” to catalog number.

‡ Adapters to competitors’ wireways also available. Contact your nearest Square D sales office for price and availability.

© 1986–2008 Schneider Electric
All Rights Reserved

Number of Knockouts for Varying Lengths of 2.5-inch, 4-inch, and 6-inch Wireways

	Number of Knockouts		
Catalog Number	**0.50 in.–0.75 in. (13 mm–19 mm)**	**1.00 in. –1.25 in. (25 mm–32 mm)**	**F**
LDB21KO	8	—	1.06 in. (27 mm)
LDB41KO	4	4	1.62 in. (41 mm)
LDB61KO	4	4	1.62 in. (41 mm)
LDB22KO	16	—	1.06 in. (27 mm)
LDB42KO	8	8	1.62 in. (41 mm)
LDB62KO	8	8	1.62 in. (41 mm)
LDB23KO	24	—	1.06 in. (27 mm)
LDB43KO	12	12	1.62 in. (41 mm)
LDB63KO	12	12	1.62 in. (41 mm)
LDB24KO	32	—	1.06 in. (27 mm)
LDB44KO	16	16	1.62 in. (41 mm)
LDB64KO	16	16	1.62 in. (41 mm)
LDB25KO	40	—	1.06 in. (27 mm)
LDB45KO	20	20	1.62 in. (41 mm)
LDB65KO	20	20	1.62 in. (41 mm)
LDB210KO	80	—	1.06 in. (27 mm)
LDB410KO	40	40	1.62 in. (41 mm)
LDB610KO	40	40	1.62 in. (41 mm)

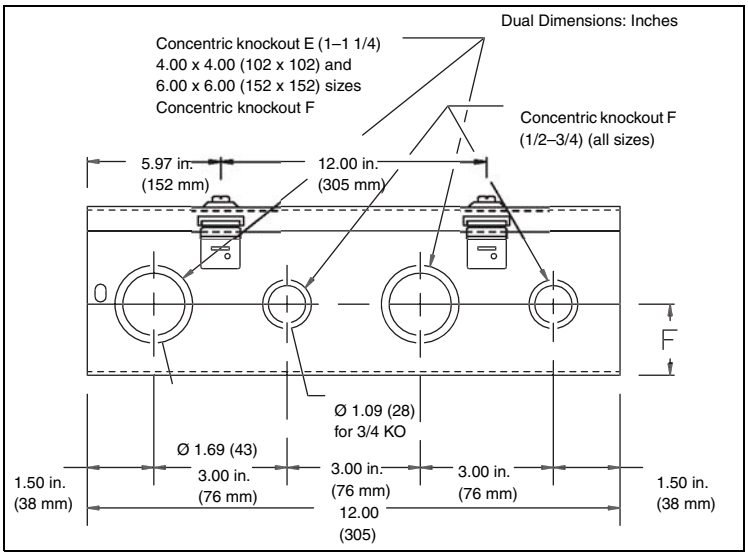

Dimensions for Wireway Components (see page 10)

A x B	C								G	H	J	K	L	M	N	P	R	S	T	U
IN (mm)	IN (mm)	IN (mm)	IN (mm)	IN (mm)	IN (mm)	IN (mm)	IN (mm)	IN (mm)	IN (mm)	IN (mm)	IN (mm)	IN (mm)	IN (mm)	IN (mm)	IN (mm)	IN (mm)	IN (mm)	IN (mm)	IN (mm)	IN (mm)
2.50 x 2.50 (64 x 64)	12.00 (305)	—	24.00 (610)	36.00 (914)	48.00 (1219)	60.00 (1524)	72.00 (1828)	120.00 (3048)	4.50 (114)	2.75 (70)	2.25 (57)	2.25 (57)	7.91 (201)	4.62 (117)	8.50 (216)	4.50 (114)	3.38 (86)	7.25 (184)	3.75 (95)	3.25 (83)
4.00 x 4.00 (102 x 102)	12.00 (305)	18.00 (455)	24.00 (610)	36.00 (914)	48.00 (1219)	60.00 (1524)	72.00 (1828)	120.00 (3048)	6.00 (152)	3.38 (86)	2.50 (64)	3.00 (76)	9.41 (239)	6.12 (155)	10.50 (267)	6.00 (152)	4.12 (105)	9.25 (235)	4.50 (114)	4.00 (102)
6.00 x 6.00 (152 x 152)	12.00 (305)	18.00 (455)	24.00 (610)	36.00 (914)	48.00 (1219)	60.00 (1524)	72.00 (1828)	120.00 (3048)	8.00 (203)	4.25 (108)	3.00 (76)	4.00 (102)	11.34 (288)	8.12 (206)	15.00 (381)	7.12 (181)	5.12 (130)	13.75 (349)	5.50 (140)	5.00 (127)
8.00 x 8.00 (203 x 203)	12.00 (305)	18.00 (455)	24.00 (610)	36.00 (914)	48.00 (1219)	60.00 (1524)	72.00 (1828)	120.00 (3048)	10.00 (254)	5.06 (129)	3.38 (86)	5.00 (127)	13.44 (341)	10.12 (257)	21.00 (533)	10.81 (275)	7.00 (178)	13.75 (349)	7.75 (197)	6.00 (152)
10.00 x 10.00 (254 x 254)	12.00 (305)	—	24.00 (610)	36.00 (914)	48.00 (1219)	60.00 (1524)	72.00 (1828)	120.00 (3048)	12.00 (305)	6.00 (152)	3.75 (95)	6.00 (152)	15.62 (395)	12.12 (308)	22.00 (559)	13.18 (335)	8.38 (213)	13.75 (349)	10.25 (260)	7.00 (178)
12.00 x 12.00 (305 x 305)	12.00 (305)	—	24.00 (610)	36.00 (914)	48.00 (1219)	60.00 (1524)	72.00 (1828)	120.00 (3048)	14.00 (356)	6.75 (171)	4.25 (108)	7.00 (178)	17.44 (443)	14.12 (359)	23.00 (584)	15.56 (395)	9.78 (248)	13.75 (349)	12.50 (318)	8.00 (203)

Note: Dimensions J, K, and U are from intersections of center lines.

© 1986–2008 Schneider Electric
All Rights Reserved

This drawing illustrates how most of the General Purpose—NEMA Type 1 Painted Wireway sections and fittings could be used in an actual wireway run. The covers have been omitted to present the lay-in feature more clearly. Many different sections and fittings can be combined in any configuration desired.

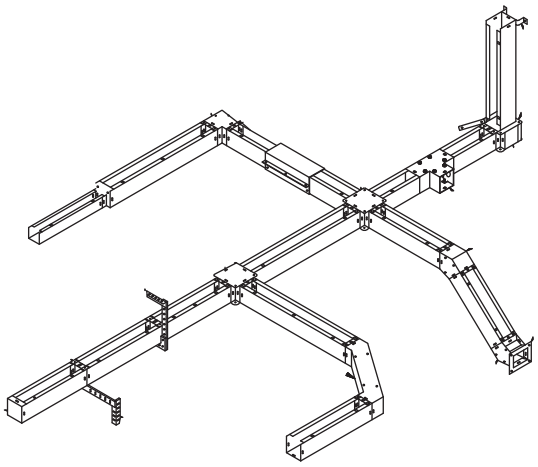

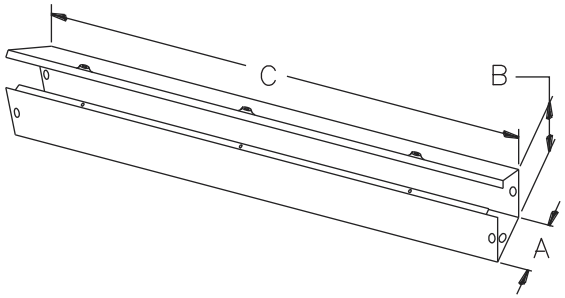

Straight Section

Available in lengths from 1 ft (30 cm) to 10 ft (305 cm).

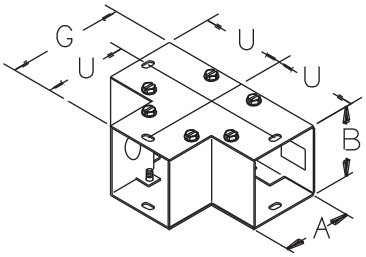

90° Flush Tee

Use wherever flush mounting against a vertical or horizontal surface is required.

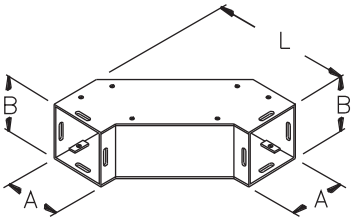

90° Sweep Elbow

When a large radius is needed, use this sweep elbow.

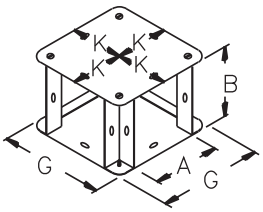

90° Cross-Junction

This unique fitting forms left or right 90° turns. It can also be used as a tee or cross. When fitted with an open adapter, entrances can be made in the top and bottom.
Each unit includes two closure plates.

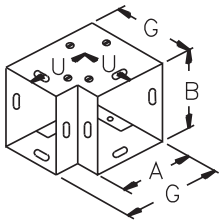

90° Elbow

Any side can be removed, so lay-in feature is retained regardless of how the elbow is oriented. Sides are held together with screws.

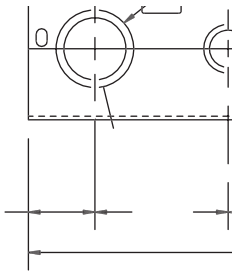

45° Elbow

Similar to the 90° elbow in design and function.

© 1986–2008 Schneider Electric
All Rights Reserved

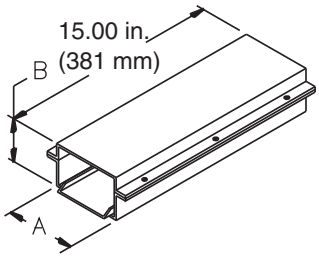

Telescope Fitting
Length is easily adjustable to approximately 12.00 in. (305 mm). No cutting or welding required.

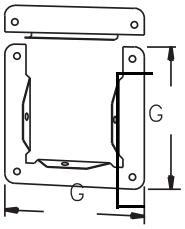

Open Adapter
Used with the 90° Elbow-Tee-Cross fitting to permit a run directly up or down.

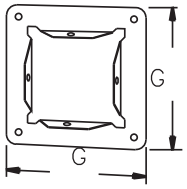

Panel Adapter
A flanged fitting which allows the wireway to be securely connected to an enclosure.

1.38 in. (35 mm) on:
2.00 in. x 200 in. (51 mm x 51 mm)
4.00 in. x 4.00 in. (102 mm x 102 mm)
6.00 in. x 6.00 in. (152 mm x 152 mm)

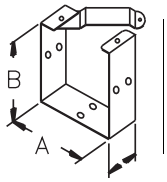

2.00 in. (51 mm) on:
8.00 in. x 8.99 in. (203 mm x 203 mm)
10.00 in. x 10.00 in. (254 mm x 254 mm)
12.00 in. x 12 in. (305 mm x 305 mm)

Connector
Wireway sections and fittings are rigidly joined together with connectors. The top member swings aside to retain the lay-in feature. A connector is required at each wireway joint except at telescope fittings, panel adapters, open adapters, closing plates or reducers. Connectors must be ordered separately.

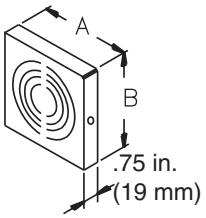

Closing Plate
Closes the end of a wireway section or run.

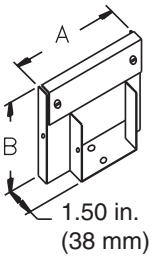

Reducer
Used to reduce to a smaller wireway size.

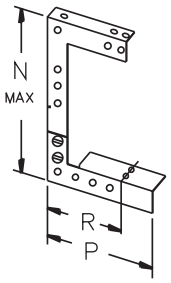

Drop Hanger
Used to support a wireway run.

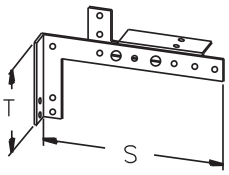

Bracket Hanger
Used to support a wireway run.

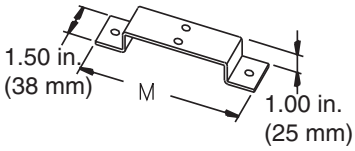

Support Hanger
Support hangers can be used for floor or wall installations.

© 1986–2008 Schneider Electric
All Rights Reserved

© 1986–2008 Schneider Electric
All Rights Reserved

Oiltight—NEMA Type 12 Wireway

Application

Oiltight—NEMA Type 12 Wireway is designed to protect electrical wiring from dust, dirt, oil, and water. All straight sections and fittings are completely open on one side so wires and cables can be laid in along an entire wireway run. No pulling through of wires or cables is required with this design.

Oiltight Lay-in—NEMA Type 12 Wireway

A complete selection of sections and fittings is available in five sizes:

Inches	Millimeters
2.50 x 2.50	64 x 64
4.00 x 4.00	102 x 102
6.00 x 6.00	152 x 152
8.00 x 8.00	203 x 203
12.00 x 6.00	305 x 152

Construction

Oiltight—NEMA Type 12 Wireway construction consists of:

- 14 gauge steel covers and bodies
- 10 gauge steel end flanges
- Seams continuously welded and ground smooth—no holes or knockouts
- Smooth, rounded edges on all sections and fittings to prevent damage to insulation
- Heavy butt hinges and strong latches to ensure complete seal between covers and bodies
- Quick-release cover latches that permit immediate access to wireway interior
- Oil-resistant gasket and adhesive
- Solid oil-resistant gasket positioned between flanges when sections and fittings are bolted together
- Gasketed quick-release connector that provides complete sealing at each joint

© 1986–2008 Schneider Electric
All Rights Reserved

Finish

Oiltight —NEMA Type 12 Wireway is furnished in ANSI 49 gray polyester powder finish inside and out over phosphatized surfaces. The sealing plate and quick-release latches are zinc plated with yellow chromate coating.

(Clockwise from top): Oiltight—NEMA Type 12 Wireway Tee, Flange Gasket, Connector, Barriers with Brackets, 90° Elbow

Industry Standards

Oiltight—NEMA Type 12 Wireway is in compliance with the following industry standards:

- UL Listed to File E27524, 870
- NEMA/EEMAC Type 12
- JIC standards EGP-1–1967 and EMP-1–1967
- CSA Listed to File LL42184, Type 12
- IEC 60529, IP54

Accessories

Touch-up paint PK49SP

11/2008 © 1986–2008 Schneider Electric
All Rights Reserved

© 1986–2008 Schneider Electric
All Rights Reserved

Catalog Numbers—Type LJB Lay-in‡

Description	2.50 x 2.50 in. (64 x 64 mm)	4.00 x 4.00 in. (102 x 102 mm)	6.00 x 6.00 in. (152 x 152 mm)	8.00 x 8.00 in. (203 x 203 mm)	12.00 x 6.00 in. (305 x 152 mm)
1 in.Nipple	LJB201	LJB401	LJB601	—	—
2 in. Nipple	LJB202	LJB402	LJB602	—	—
3 in. Nipple	LJB203	LJB403	LJB603	—	—
6 in. Length	LJB206	LJB406	LJB606	LJB806	LJB12606
1 ft Length	LJB21	LJB41	LJB61	LJB81	LJB1261
2 ft Length	LJB22	LJB42	LJB62	LJB82	LJB1262
3 ft Length	LJB23	LJB43	LJB63	LJB83	LJB1263
4 ft Length	LJB24	LJB44	LJB64	LJB84	LJB1264
5 ft Length	LJB25	LJB45	LJB65	LJB85	LJB1265
10 ft Length†	LJB210	LJB410	LJB610	LJB810	LJB12610
45° Elbow Top Opening	LJB245LT	LJB445LT	LJB645LT	LJB845LT	LJB12645LT
45° Elbow Inside Opening	LJB245LI	LJB445LI	LJB645LI	LJB845LI	—
45° Elbow Outside Opening	LJB245LO	LJB445LO	LJB645LO	LJB845LO	—
90° Elbow Inside Opening	LJB290LI	LJB490LI	LJB690LI	LJB890LI	LJB12690LI
90° Elbow Outside Opening	LJB290LO	LJB490LO	LJB690LO	LJB890LO	LJB12690LO
90° Elbow Outside Top Opening	—	LJB490LOT	LJB690LOT	LJB890LOT	—
90° Elbow Top Opening	LJB290LT	LJB490LT	LJB690LT	LJB890LT	LJB12690LT
Tee—Top Opening	LJB2TT	LJB4TT	LJB6TT	LJB8TT	LJB126TT
Tee—Outside Opening	LJB2TO	LJB4TO	LJB6TO	LJB8TO	—
Cross	LJB2X	LJB4X	LJB6X	LJB8X	LJB126X
Junction Box	LJB2JB	LJB4JB	LJB6JB	LJB8JB	—
Telescopic Fitting	LJB2TF	LJB4TF	LJB6TF	LJB8TF	LJB126TF
Closing Plate	LJB2CP	LJB4CP	LJB6CP	LJB8CP	LJB126CP
Panel Adapter	LJB2A	LJB4A	LJB6A	LJB8A	LJB126A
Bracket Hanger	LJB2BH	LJB4BH	LJB6BH	LJB8BH	—
Drop Hanger	LJB2DH	LJB4DH	LJB6DH	LJB8DH	—
Extra Connector Kit‡	LJB2C	LJB4C	LJB6C	LJB8C	LJB126C
90° Connector	LJB290C	LJB490C	LJB690C	LJB890C	LJB12690C
Reducer to 2 in.	—	LJB42R	—	—	—
Reducer to 4 in.	—	—	LJB64R	—	LJB1264R
Reducer to 6 in.	—	—	—	LJB86R	LJB1266R
Cut-off fitting—not Lay-in	LJB2CF	LJB4CF	LJB6CF	LJB8CF	LJB126CF
Cut-off fitting—Lay-in	LJB2CFL	LJB4CFL	LJB6CFL	LJB8CFL	LJB126CFL
Transposition Fitting—CCW (Straight)	LJB21CCW	LJB41CCW	LJB61CCW	—	—
Transposition Fitting—CW (Straight)	LJB21CW	LJB41CW	LJB61CW	—	—
Transposition Elbow—CCW	LJB290LCCW	LJB490LCCW	LJB690LCCW	LJB890LCCW	—
Transposition Elbow—CW	LJB290LCW	LJB490LCW	LJB690LCW	LJB890LCW	—
Swivel fitting—Wireway to Wireway	LJB2S	LJB4S	LJB6S	LJB8S	—
Swivel fitting—Wireway to Box	LJB2SB	LJB4SB	LJB6SB	LJB8SB	—
Flex Fitting—Feed-Thru	LJB2FF	LJB4FF	LJB6FF	LJB8FF	—
Barrier Kit—5 ft long w/hardware	—	LJB45B	LJB65B	LJB85B	—
5-piece Barrier Pack—5 ft long	—	LJB45BKM	LJB65BKM	—	—
5-piece Barrier Bracket—2 compartment	—	LJB4BB2C	LJB6BB2C	—	—
5-piece Barrier Bracket—3 compartment	—	LJB4BB3C	LJB6BB3C	—	—

† 10 ft straight lengths UL Listed for up to 10 ft hanger spacing.
‡ Connector kit furnished with each length and fitting.

© 1986–2008 Schneider Electric
All Rights Reserved

Dimensions for Wireway Components (See page 17)

A x B	C						D	E	G	H	J	K	M	N	P	R	S	T	U
IN (mm)	IN (mm)	IN (mm)	IN (mm)	IN (mm)	IN (mm)	IN (mm)	IN (mm)	IN (mm)	IN (mm)	IN (mm)	IN (mm)	IN (mm)	IN (mm)	IN (mm)	IN (mm)	IN (mm)	IN (mm)	IN (mm)	IN (mm)
2.50 x 2.50 (64 x 64)	6.00 (152)	12.00 (305)	24.00 (610)	48.00 (1219)	60.00 (1524)	120.00 (3048)	3.88 (99)	3.88 (99)	8.50 (216)	4.25 (108)	2.00 (51)	4.25 (108)	12.00 (305)	10.25 (260)	4.62 (117)	3.62 (92)	9.25 (235)	4.50 (114)	4.38 (111)
4.00 x 4.00 (102 x 102)	6.00 (152)	12.00 (305)	24.00 (610)	48.00 (1219)	60.00 (1524)	120.00 (3048)	5.38 (137)	5.38 (137)	10.00 (254)	5.00 (127)	2.44 (62)	5.00 (127)	14.00 (356)	13.88 (353)	6.12 (155)	3.62 (92)	11.75 (298)	6.00 (152)	5.88 (149)
6.00 x 6.00 (152 x 152)	6.00 (152)	12.00 (305)	24.00 (610)	48.00 (1219)	60.00 (1524)	120.00 (3048)	7.62 (194)	7.62 (194)	12.00 (305)	6.00 (152)	3.00 (76)	6.00 (152)	16.00 (406)	17.88 (454)	8.25 (210)	3.62 (92)	15.25 (387)	8.12 (206)	7.88 (200)
8.00 x 8.00 (203 x 203)	6.00 (152)	12.00 (305)	24.00 (610)	48.00 (1219)	60.00 (1524)	120.00 (3048)	9.62 (244)	9.62 (244)	14.00 (356)	7.00 (178)	3.75 (95)	7.00 (178)	18.00 (457)	21.88 (556)	10.25 (260)	3.62 (92)	20.56 (522)	12.12 (308)	11.25 (286)
12.00 x 6.00 (305 x 152)	6.00 (152)	12.00 (305)	24.00 (610)	48.00 (1219)	60.00 (1524)	120.00 (3048)	13.62 (346)	7.62 (194)	18.00 (457)	6.00 (152)	4.75 (121)	9.00 (229)	—	—	—	—	—	—	—

Note: Dimensions H, J, and K are from intersections of center lines. All dimensions are to outside surfaces. Allow 0.12 in. (3 mm) for flange gasket when two pieces are joined. If, however, one piece is a “Closure Plate”, “Box Connector”, “Cut-off Fitting”, or non-lay-in wireway, allow.25 in. (6 mm) for the thicker gasket which is used.

11/2008 © 1986–2008 Schneider Electric
All Rights Reserved

© 1986–2008 Schneider Electric
All Rights Reserved

This drawing illustrates how most of the Oiltight—NEMA Type 12 Wireway sections and fittings could be used in an actual wireway run. The covers have been omitted to present the lay-in feature more clearly. Many different sections and fittings can be combined in any configuration desired.

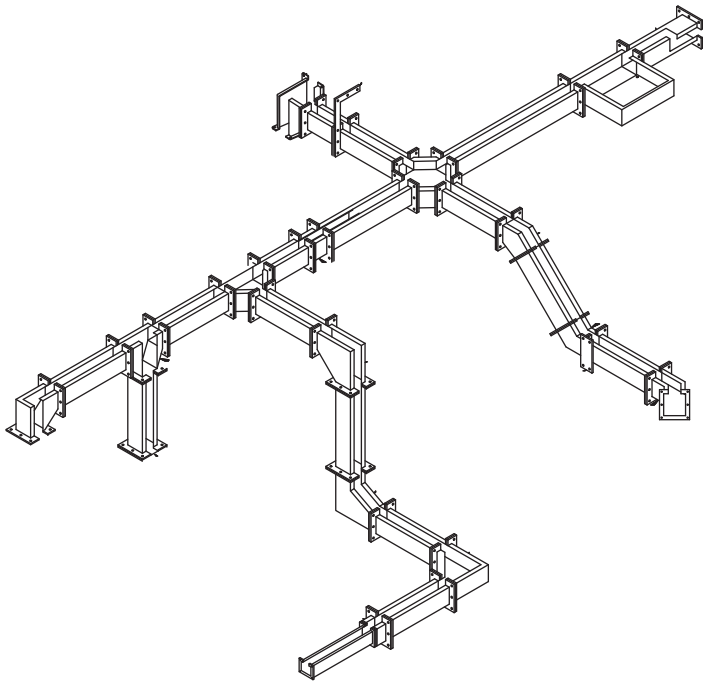

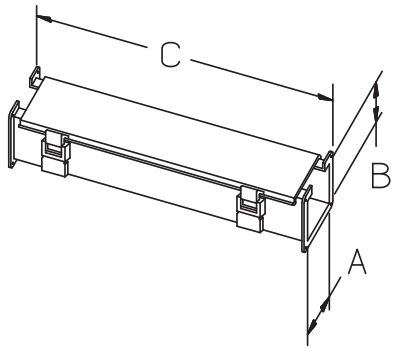

Straight Section

Available in lengths from 1 ft (30 cm) to 10 ft (305 cm).

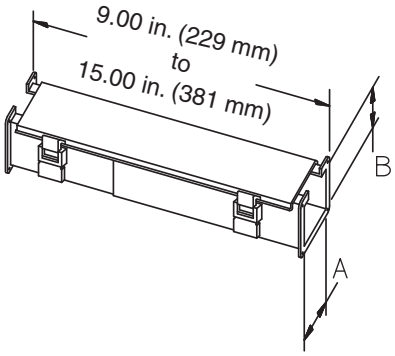

Lay-In Cut-Off Fitting

For lengths of 9.00 in. (229 mm) to 15.00 in. (381mm) only. Body comes in two pieces. Shorten body and cover to the desired length and weld together.

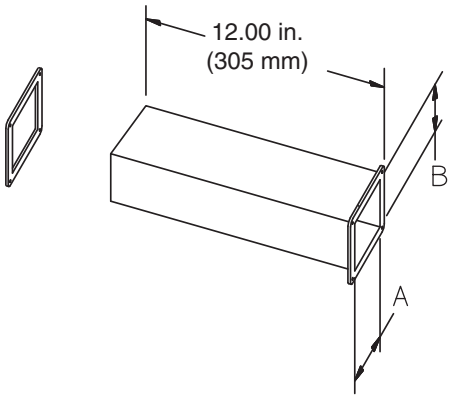

Non-Lay-In Cut-Off Fitting

For lengths up to 12.00 in. (305 mm). Shorten body to desired length and weld on flange. This is not a “lay-in” fitting but often is used when entering an enclosure.

© 1986–2008 Schneider Electric
All Rights Reserved

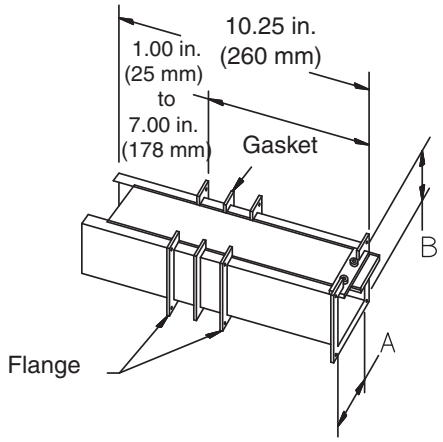

Lay-In Telescope Fitting

Length is easily adjustable from 1.00 in. (25 mm) to 7.00 in. (178 mm). No cutting or welding required.

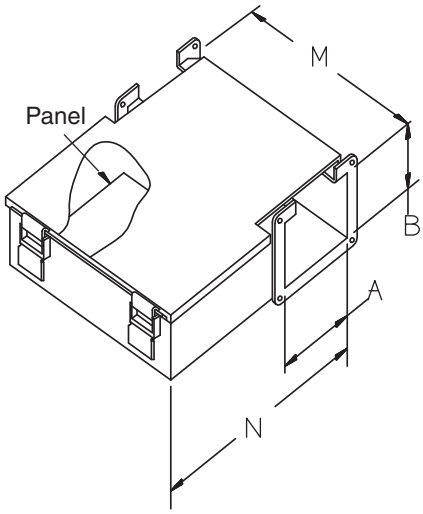

Junction Box

The junction box has a removable panel on which terminal blocks and other components may be mounted. Panel dimensions are:

8.75 in. x 6.88 in. (222 mm x 175 mm) for F-22LJ

10.75 in. x 8.88 in. (273 mm x 225 mm) for F-44LJ

12.75 in. x 10.88 in. (324 mm x 276 mm) for F-66LJ

14.75 in. x 12.88 in. (375 mm x 327 mm) for F-88LJ

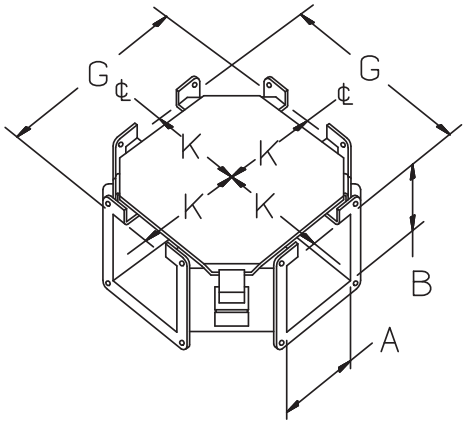

Cross

Used when there are four branches, all open along the same side.

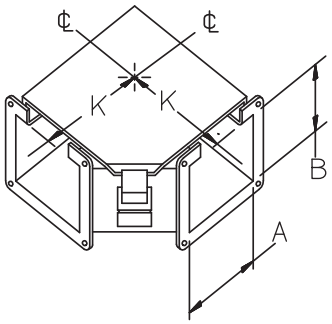

90° Elbow Top Opening

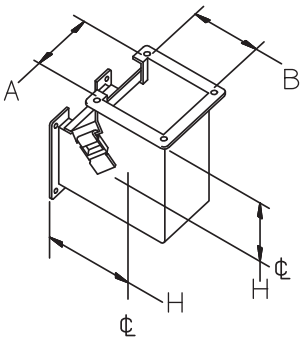

90° Elbow Inside Opening

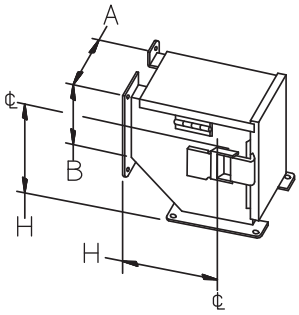

90° Elbow Outside Opening

Because sections of lay-in wireway can be mounted with covers oriented in any direction, three different 90° elbows are offered. Proper selection allows the user to maintain the same access and thereby preserve the lay-in feature for right-angle installations.

11/2008 © 1986–2008 Schneider Electric
All Rights Reserved

© 1986–2008 Schneider Electric
All Rights Reserved

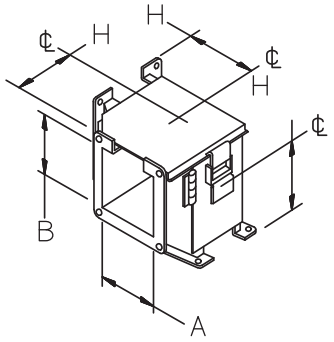

90° Elbow Outside Top Opening

This elbow fitting allows a vertical drop to equipment below at a 90° corner while maintaining the top opening lay-in feature.

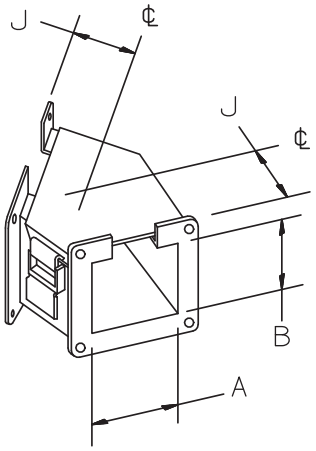

45° Elbow Top Opening

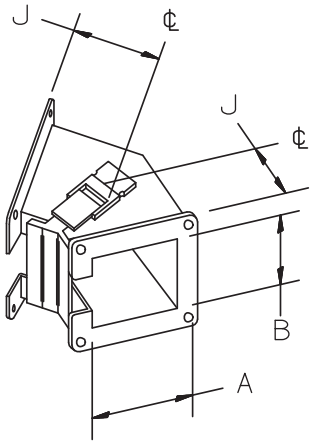

45° Elbow Inside Opening

Similar to the 90° elbows in design and function, except used where a 45° angle is needed.

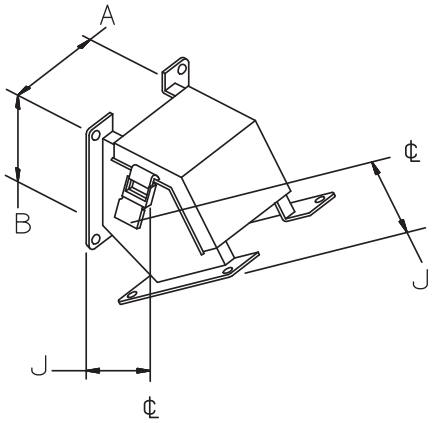

45° Elbow Outside Opening

Similar to the 90° elbows in design and function, except used where a 45° angle is needed.

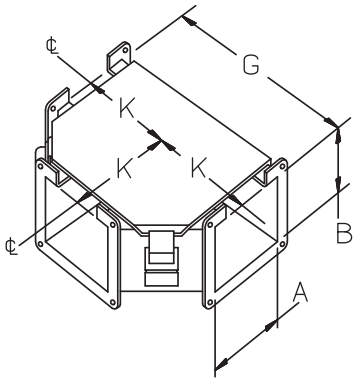

Tee Top Opening

This fitting is used when the covers of all three branches of the wireway run are open along the same side.

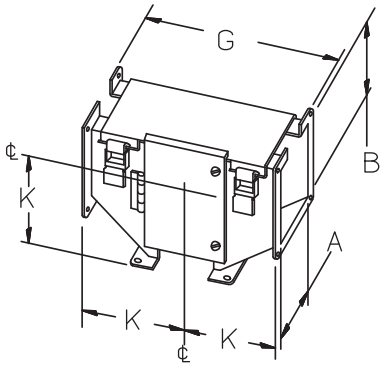

Outside Tee Top Opening

This fitting is used when the covers of two branches are on the same side, and the third is on a different side.

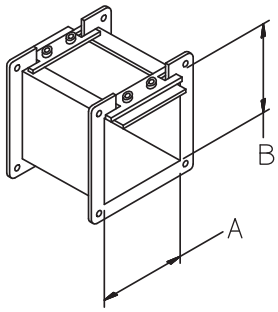

Nipple

Available in lengths of 1.00 in. (25 mm), 2.00 in. (51 mm), 3.00 in. (76 mm), and 6.00 in. (152 mm).

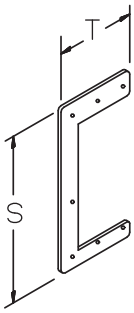

Drop Hanger

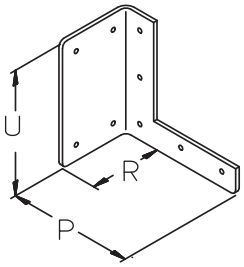

Bracket Hanger

Hangers are used to support a wireway run.The drop hanger is normally attached to an overhead beam or ceiling while the bracket hanger can be used for wall, floor, or ceiling installations.

© 1986–2008 Schneider Electric
All Rights Reserved

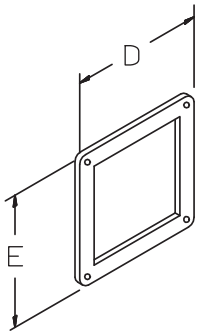

Box Connector

When wireway enters an enclosure, a box connector should be used on the inside of the enclosureto ensure a tight seal.

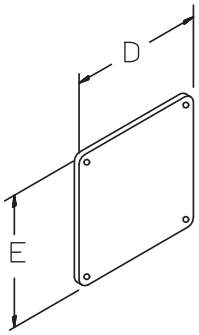

Closing Plate

Used to seal the end of a wireway section or run.

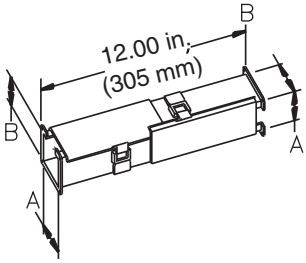

Clockwise Transposition Section

These fittings are used when it is necessary to rotate the open side of the wireway run by 90 ° and still retain the lay-in feature.

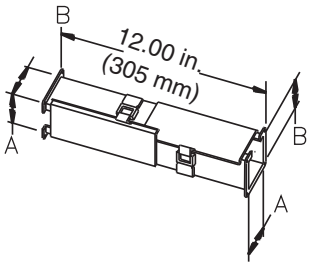

Counter-Clockwise Transposition Section

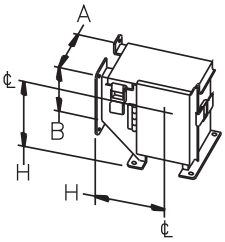

90° Elbow Clockwise Transposition

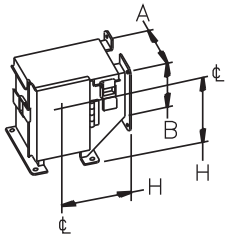

90° Elbow Counter-Clockwise Transposition

These fittings are used when it is necessary to rotate the open side of the wireway run by 90° and still retain the lay-in feature.

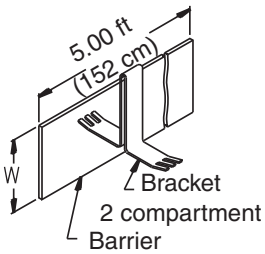

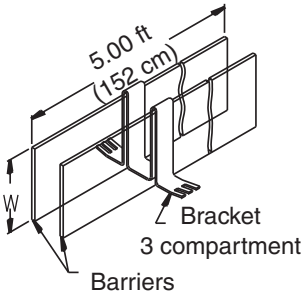

Barrier, Bracket Mounted

Divides wireway into two or three compartments. Spring steel brackets hold barriers in place by friction fit inside wireway. Order barrier and bracket separately. Recommended spacing in increments of 3 ft (91 cm).

W = 3.00 in. (76 mm) for 4.00 in. x 4.00 in. (102 mm x 102 mm)

W = 4.50 in. (114 mm) for 6.00 in. x 6.00 in. (152 mm x 152 mm)

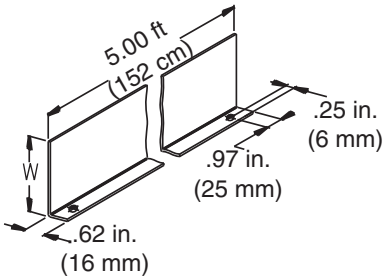

Barrier Kit (Bolt-On)

Divides wireway into two or more compartments. Barriers are fastened to wireway sections with screws. Sealing washers are included.

W = 3.00 in. (76 mm) for 4.00 in. x 4.00 in. (102 mm x 102 mm)

W = 4.50 in. (114 mm) for 6.00 in. x 6.00 in. (152 mm x 152 mm)

W = 6.00 in. (152 mm) for 8.00 in. x 8.00 in. (203 mm x 203 mm)

11/2008 © 1986–2008 Schneider Electric
All Rights Reserved

© 1986–2008 Schneider Electric
All Rights Reserved

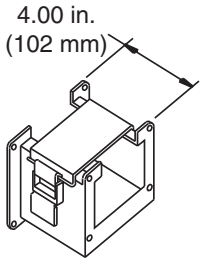

Reducer

This fitting permits the lay-in feature to be retained when reducing to a smaller wireway size.

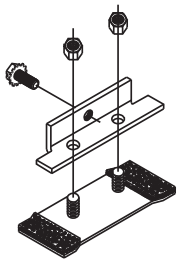

Connector

When joining a lay-in section or fitting to a closure plate, a box connector, a non-lay-in cut-off fitting, or any similar non-lay-in section or fitting, a 90° angle sealing plate is required at each junction. This plate is furnished with fittings as noted on page 15. Additional 90° angle sealing plates may be required in some cases. Plate includes a flange gasket and flange screws, not shown.

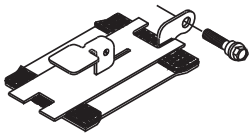

Extra Connector Kit

This hinged sealing plate permits quick and easy access to the wireway interior without using a tool.

Patent number 4,398,564

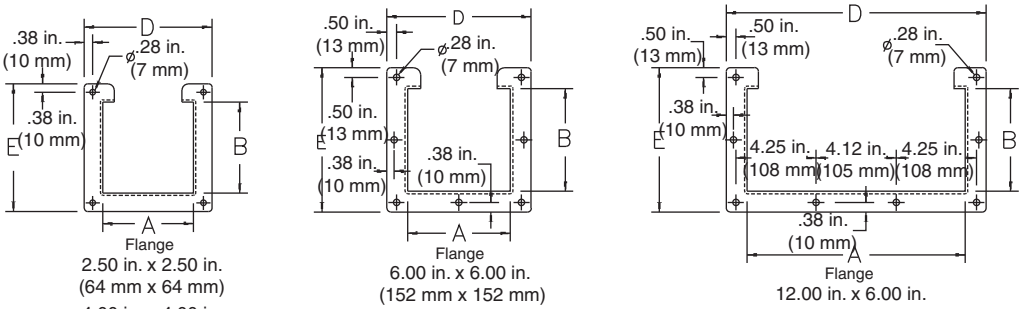

Flange Detail

© 1986–2008 Schneider Electric
All Rights Reserved

© 1986–2008 Schneider Electric
All Rights Reserved

Raintight—NEMA Type 3R Wireway

Application

Raintight—NEMA Type 3R Gangable Wireway is designed to protect electrical wiring in outdoor installations against rain, sleet, and snow or indoors against dripping water. All sections and fittings are completely open on one side so wires and cables can be laid in along an entire wireway run. No pulling through of wires or cables is required with this design.

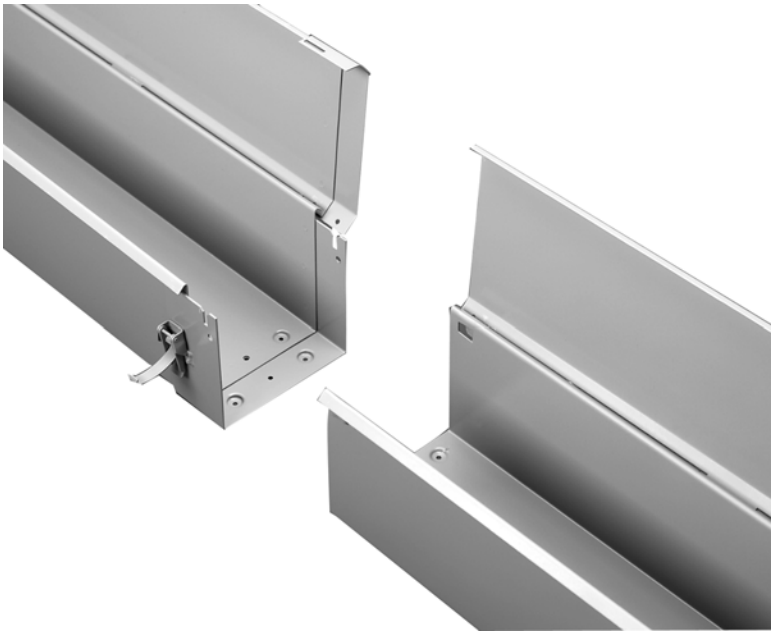

Raintight Lay-in—NEMA Type 3R Wireway

A complete selection of sections and fittings is available in three sizes:

Inches	Millimeters
4.00 x 4.00	102 x 102
6.00 x 6.00	152 x 152
8.00 x 8.00	203 x 203

Construction

Raintight NEMA —Type 3R Wireway construction consists of:

- 16 gauge galvanized steel straight sections in sizes:
  - — 4.00 in. x 4.00 in. (102 mm x 102 mm)
  - — 6.00 in. x 6.00 in. (152 mm x 152 mm)
- 14 gauge galvanized steel straight sections in size
  - — 8.00 in. x 8.00 in. (203 mm x 203 mm)

NOTE: All other components of this product line are 14 gauge steel.

- Open top assembly protection for wire and cable insulation that might otherwise be damaged in a pull through wiring system
- Self-connecting system with minimum usage of fasteners
- Removable covers held firmly closed with quick-release latches to maintain rain-tightness throughout
- Quick-release cover latches permit immediate access to wireway interior

© 1986–2008 Schneider Electric
All Rights Reserved

Finish

Raintight—NEMA Type 3R Wireway is furnished in ANSI 49 gray polyester powder finish over galvanized steel.

Industry Standards

Raintight—NEMA Type 3R Wireway is in compliance with the following industry standards:

- NEMA/EEMAC Type 3R
- IEC 60529, IP32

Catalog Numbers—Raintight Wireway

Description†	4.00 in. x 4.00 in. (102 mm x 102 mm)	6.00 in. x 6.00 in. (152 mm x 152 mm)	8.00 in. x 8.00 in. (203 mm x 203 mm)
1 ft Length Female	LDRB41F	LDRB61F	LDRB81F
1 ft Length Male	LDRB41M	LDRB61M	LDRB81M
5 ft Length Female	LDRB45F	LDRB65F	LDRB85F
5 ft Length Male	LDRB45M	LDRB65M	LDRB85M
10 ft Length Female	LDRB410F	LDRB610F	LDRB810F
10 ft Length Male	LDRB410M	LDRB610M	LDRB810M
90° Elbow	LDRB490L	LDRB690L	LDRB890L
30° Sweep Elbow	LDRB430SE	LDRB630SE	LDRB830SE
Tee	LDRB4T	LDRB6T	LDRB8T
Junction Box	LDRB4J	LDRB6J	LDRB8J
Panel Adapter	LDRB44A	LDRB66A	LDRB88A
Connector	LDRB4C	LDRB6C	LDRB8C
Closing Plate	LDRB4CP	LDRB6CP	LDRB8CP
Drop Hanger	LDRB4DH	LDRB6DH	LDRB8DH
Wall Hanger	LDRB4WH	LDRB6WH	LDRB8WH
Reducer	—	LDRB64R	LDRB86R

† For a continuous, straight run of wireway, alternate male and female straight sections.

© 1986–2008 Schneider Electric
All Rights Reserved

Dimensions for Wireway Components (See page 25–26)

A x B	C			G	K	N	O	P	Q	S	T	U	V	W
IN (mm)	IN (mm)	IN (mm)	IN (mm)	IN (mm)	IN (mm)	IN (mm)	IN (mm)	IN (mm)	IN (mm)	IN (mm)	IN (mm)	IN (mm)	IN (mm)	IN (mm)
4.00 x 4.00 (102 x 102)	12.00 (305)	60.00 (1524)	120.00 (3048)	16.00 (406)	16.00 (406)	13.00 (330)	16.00 (406)	10.00 (254)	10.00 (254)	9.50 (241)	4.50 (114)	1.25 (31)	5.00 (127)	5.00 (127)
6.00 x 6.00 (152 x 152)	12.00 (305)	60.00 (1524)	120.00 (3048)	18.00 (457)	18.00 (457)	13.00 (330)	18.00 (457)	12.00 (305)	12.00 (305)	14.00 (356)	5.50 (140)	1.25 (31)	7.00 (178)	7.00 (178)
8.00 x 8.00 (203 x 203)	12.00 (305)	60.00 (1524)	120.00 (3048)	20.00 (508)	20.00 (508)	13.00 (330)	20.00 (508)	14.00 (356)	14.00 (356)	14.00 (356)	8.00 (203)	1.25 (310)	9.00 (229)	9.00 (229)

Note: All dimensions are to outside surfaces.

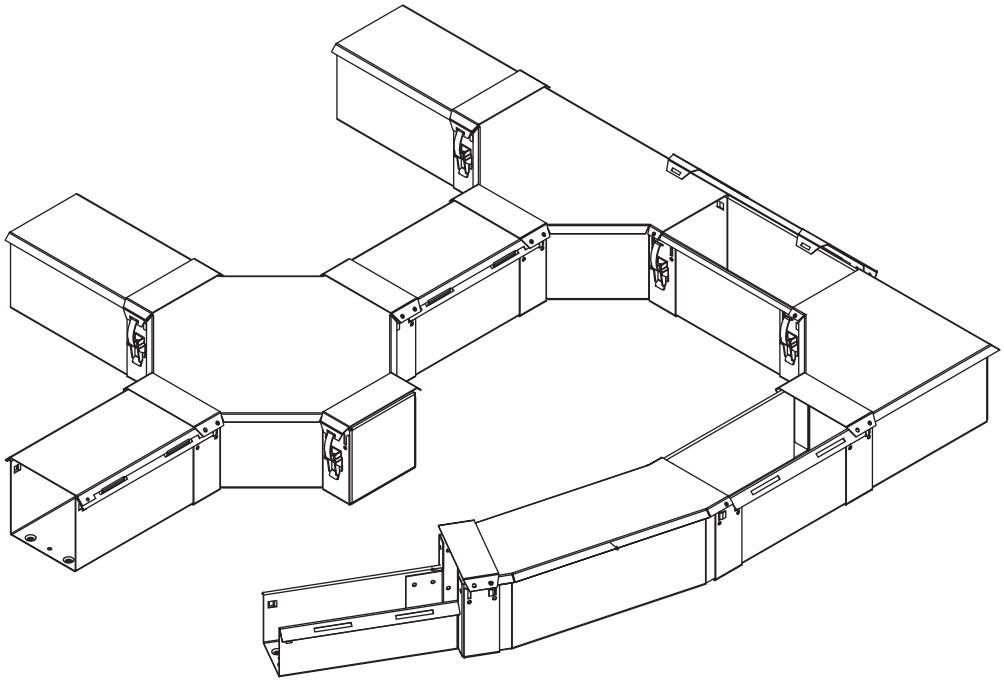

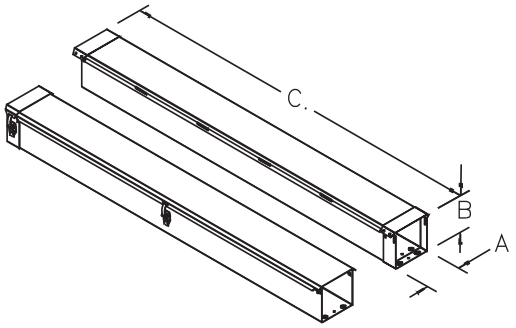

Straight Section: Male and Female

Available in lengths from 1 ft (30 cm) to 10 ft (305 cm). Male and female straight sections need to be alternated.

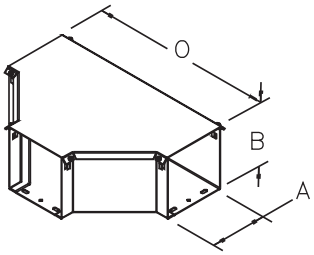

90° Flush Tee

Use wherever flush mounting against a vertical surface is required.

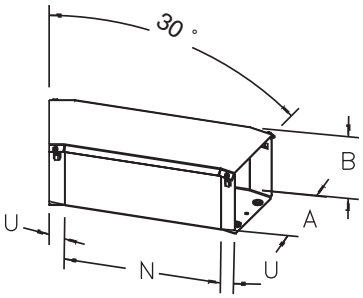

30° Sweep Elbow

When a large radius is needed, use this Sweep elbow.

© 1986–2008 Schneider Electric
All Rights Reserved

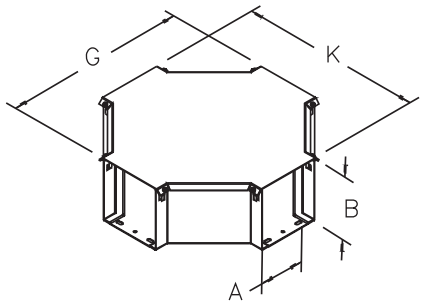

90° Elbow-Tee-Cross

Use when there are four branches. It can be used as a 90° Elbow or a 90° Flush Tee by adding Closure Plates.

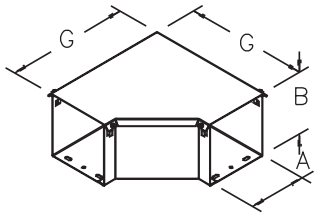

90° Elbow

Used whenever a right-angle installation is needed.

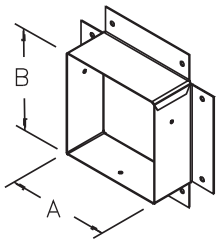

Panel Adapter

Allows the wireway to be securely connected to an enclosure.

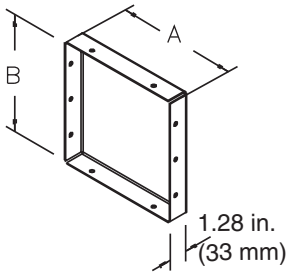

Closing Plate

Closes the end of a wireway section or run.

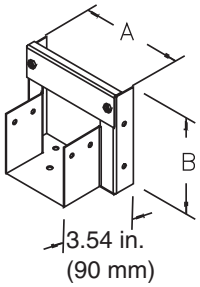

Reducer

Used to reduce to a smaller wireway size.

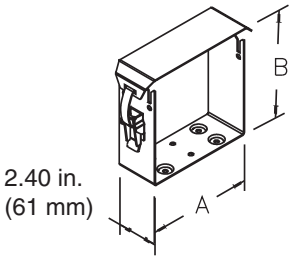

Connector

Used to rigidly join all male ends at straight sections and at fittings.

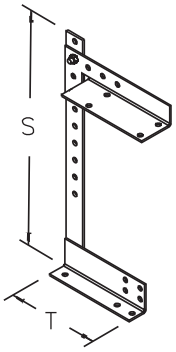

Drop Hanger

Used to support a wireway run.

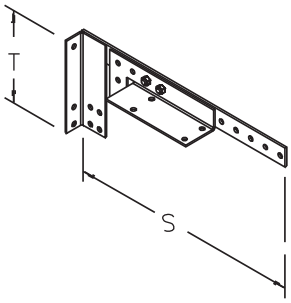

Bracket Hanger

Used to support a wireway run.

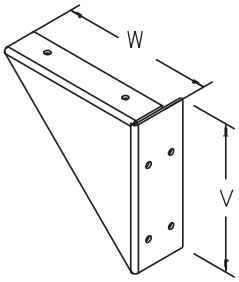

Wall Hanger

Used to support a wireway run.

© 1986–2008 Schneider Electric
All Rights Reserved

Raintight—NEMA Type 3R Trough

Application

Raintight—NEMA Type 3R Trough is designed to protect electrical wiring in outdoor installations against rain, sleet, and snow or indoors against dripping water.

Raintight—NEMA Type 3R Trough

Construction

Raintight—NEMA Type 3R Trough construction consists of:

- 16 gauge or 14 gauge galvanized steel
- Drip shield top and seam-free sides, front, and back that protects from rain, snow, or sleet
- Slip-on removable cover fastened with captivated plated steel screws along bottom edge
- Embossed mounting holes on back of enclosure
- Provision for padlocking
- No gasketing or knockouts

Finish

Raintight—NEMA Type 3R Trough is furnished in ANSI 49 gray polyester powder finish over galvanized steel.

Industry Standards

Raintight—NEMA Type 3R Trough is in compliance with the following industry standards:

- UL Listed to File E27524, 870
- NEMA/EEMAC Type 3R
- CSA Listed to File LL42184, Type 3R
- IEC 60529, IP32

Accessories

Touch-up paint PK49SP

© 1986–2008 Schneider Electric
All Rights Reserved

Catalog Numbers—Raintight Trough

C (below)	A x B (below)				
Length	4.00 x 4.00 in. (102 x 102 mm)	6.00 x 6.00 in. (152 x 152 mm)	8.00 x 8.00 in. (203 x 203 mm)	10.00 x 10.00 in. (254 x 254 mm)	12.00 x 12.00 in. (305 x 305 mm)
1 ft	RDB41	RDB61	—	—	—
2 ft	RDB42	RDB62	RDB82	RDB102	RDB122
3 ft	RDB43	RDB63	RDB83	RDB103	RDB123
4 ft	RDB44	RDB64	RDB84	—	—
5 ft	RDB45	RDB65	RDB85	RDB105	RDB125
6 ft	—	RDB66	RDB86	RDB106	RDB126

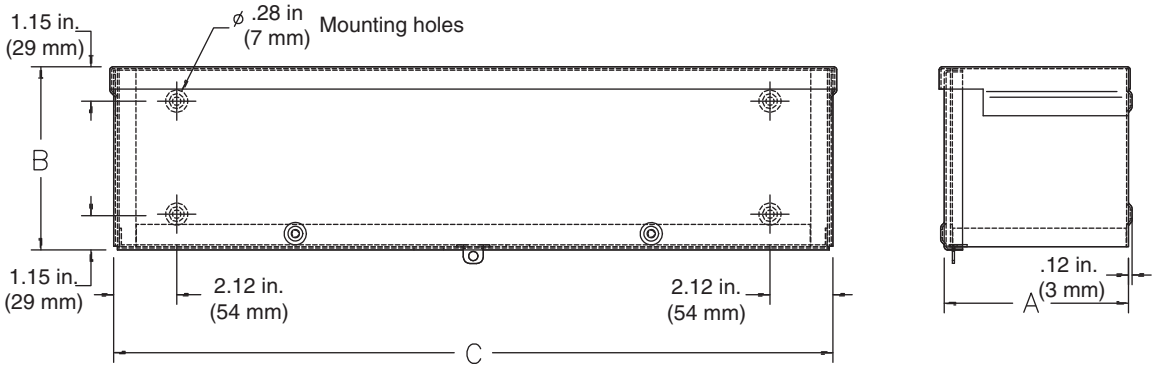

© 1986–2008 Schneider Electric
All Rights Reserved

Schneider Electric USA
5375 College Corner Road
Oxford, OH 45056 USA
1-888-Square D
1-888-778-2733
www.us.SquareD.com

5100CT0101R10/08 © 1986–2008 Schneider Electric All Rights Reserved
Replaces 5100CT0101 dated 08/2004

11/2008

American Electrical, Inc.

Industrial Electrical Accessories

425 Southlake Blvd. • Suite 9-B • Richmond, VA 23236 • (804) 379-2899 • Fax: (804) 379-8935

DIN Rail

- Steel design
- Zinc chromate plating
- 2 meter length
- Standard packs of 20
- Competitive Pricing
- Industry standard Materials
- CE approved
- 6 types available
- No Markings on Rail
- American Electrical Pays Freight

35 mm X 7.5 mm
Solid
Standard Pack: 20

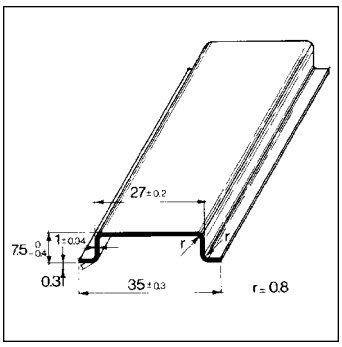

TS3575SOL

* Other Lengths Available

35 mm X 7.5 mm
Slotted
Standard Pack: 20

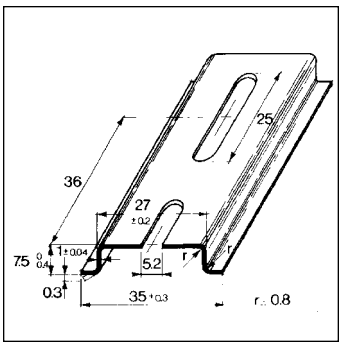

TS3575SL

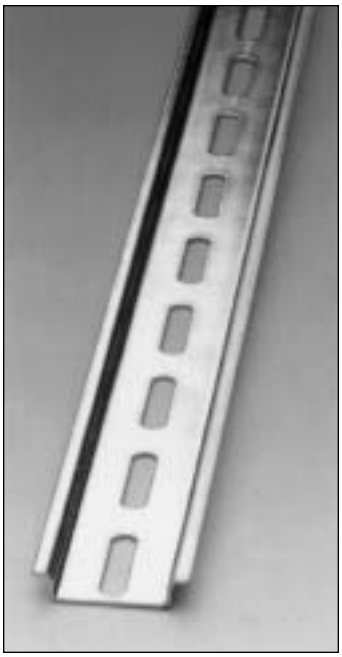

* Other Lengths Available

32 mm X 15 mm
Solid
Standard Pack: 20

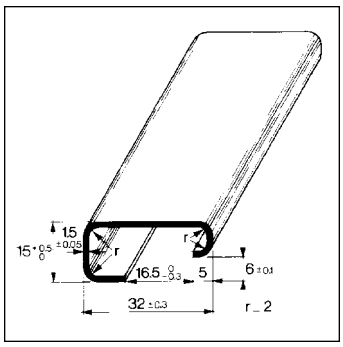

TS32SOL

DIN Rail

35 mm X 15 mm
Solid
Standard Pack: 20

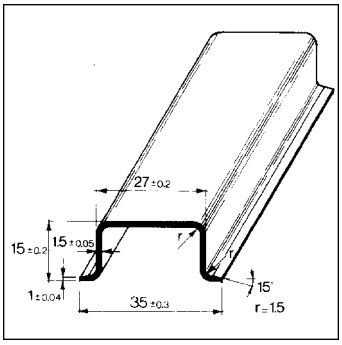

TS3515SOL

35 mm X 15 mm
Slotted
Standard Pack: 20

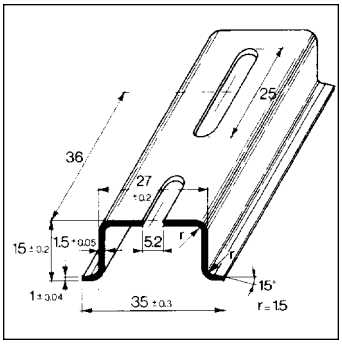

TS3515SL

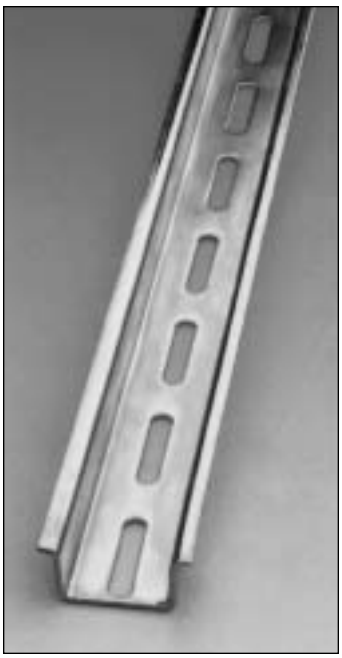

35 mm X 15 mm
Solid "Heavy"
Standard Pack: 20

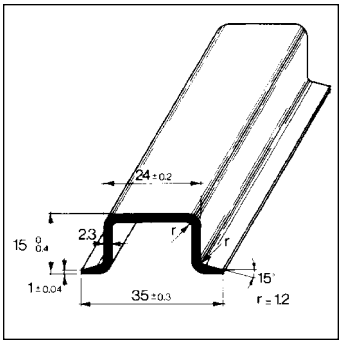

TS3515SOLH

DIN Rail Cross Refference List						
American Electrical	**TS3575SL***	**TS3575SOL***	**TS3515SL**	**TS3515SOL**	**TS32SOL**	**TS3515SOLH**
Entrelec	173220.05	174300.17	101598.26	168700.22	163050.04	168500.12
Phoenix Contact	801733	801681	1201730	1201714	1201015	—
Wago	210-112	210-113	210-197	210-114	—	210-118
Weidmuller	51450	38340	23650	23640	12280	49800
Wieland	98.300.1000.0	98.300.0000.0	98.370.1000.0	98.370.0000.0	98.190.0000.0	—
Other rail types available upon request.						

* Other Lengths Available

Switch, Safety, 60 A

General Duty Safety Switch, Current Rating 60 Amps, Power Rating 15 HP, NEMA Type 3R Enclosure, Height 9 5/8 Inches, Depth 3 3/4 Inches, Width 7 1/4 Inches, Requires Field Installation, 3 Wire, 3 Blades, 240 VAC, Series E, Non Fusible

Grainger Item #	1H263
Price (ea.)	**$273.50**
Brand	SQUARE D
Mfr. Model #	DU322RB
Ship Qty.	1
Sell Qty. (Will-Call)	1
Ship Weight (lbs.)	4.7
Usually Ships	Today
Catalog Page No.	287

Price shown may not reflect your price. Log in or register.

Additional Info

General-Duty Safety Switches

Switches provide a 10K-ampere short-circuit current rating when used with or protected by a Class H fuse. They have a 100K-ampere short-circuit current rating when used with, or protected by, a Class R cartridge-type fuse with Class R fuse kits (see page 286) installed. Features include visible blades for positive identification that switch is Off, and a quick-make, quick-break operating mechanism. Lugs are suitable for aluminum or copper conductors. Multiple padlock provisions in Off position. Spring-reinforced plated-copper fuse clips. Switches meet UL 98 and meet or exceed NEMA Standard KS1-1990. UL Listed. Suitable for use as service entrance equipment. Requires equipment grounding kit; see page 286.

Tech Specs

Item: Safety Switch
Type: Nonfusible
Duty: General
Amps: 60
Voltage: 240
Phase: 3
HP: 15
NEMA Rating: 3R
Number of Wires: 3
Number of Poles: 3
Height (In.): 9.63
Depth (In.): 3.75
Width (In.): 7.25

Notes & Restrictions

There are currently no notes or restrictions for this item.

MSDS

This item does not require a **Material Safety Data Sheet (MSDS).**

Required Accessories

There are currently no required accessories for this item.

Optional Accessories

Switch Bolt On Hub

Item #: 1H301
Brand: SQUARE D
Usually Ships: Today
Price (ea): $13.58

Switch Bolt On Hub

Item #: 1H302
Brand: SQUARE D
Usually Ships: Today
Price (ea): $13.58

Alternate Products

Switch, Safety, 100 A

Item #: 1H265
Brand: SQUARE D
Usually Ships: Today
Price (ea): $522.00

Switch, Safety, 60 A

Item #: 1H378
Brand: SQUARE D
Usually Ships: Today
Price (ea): $524.50

Safety Switch, NEMA 3R, 3W, 3P, 8x11x18.5

Item #: 6FNG8
Brand: SIEMENS
Usually Ships: 1-3 Days
Price (ea): $175.75

Repair Parts

A Repair Part may be available for this item. Visit our Repair Parts Center or contact your local branch for more information.

UL Certified

- For countries that require UL certification (UL 1741/IEEE 1547)

Efficient

- 97% peak efficiency
- OptiCool™ active temperature management system

Safe

- Galvanic isolation

Simple

- Patented automatic grid voltage detection*
- Integrated DC disconnect switch

SUNNY BOY 5000-US / 6000-US / 7000-US / 8000-US

Versatile performer with UL certification

The Sunny Boy 5000-US, 6000-US, 7000-US and 8000-US inverters are UL certified and feature excellent efficiency. Graduated power classes provide flexibility in system design. Automatic grid voltage detection* and an integrated DC disconnect switch simplify installation, ensuring safety as well as saving time. These models feature galvanic isolation and can be used with all types of modules—crystalline as well as thin-film.

* US Patent US7352549B1

Technical data	Sunny Boy 5000-US			Sunny Boy 6000-US			Sunny Boy 7000-US			Sunny Boy 8000-US	
	208 V AC	240 V AC	277 V AC	208 V AC	240 V AC	277 V AC	208 V AC	240 V AC	277 V AC	240 V AC	277 V AC
Input (DC)											
Max. recommended PV power (@ module STC)	6250 W			7500 W			8750 W			10000 W	
Max. DC power (@ cos φ = 1)	5300 W			6350 W			7400 W			8600 W	
Max. DC voltage	600 V			600 V			600 V			600 V	
DC nominal voltage	310 V			310 V			310 V			345 V	
MPP voltage range	250 V – 480 V			250 V – 480 V			250 V – 480 V			300 V – 480 V	
Min. DC voltage / start voltage	250 V / 300 V			250 V / 300 V			250 V / 300 V			300 V / 365 V	
Max. input current / per string (at DC disconnect)	21 A / 20 A 36 A @ combined terminal			25 A / 20 A 36 A @ combined terminal			30 A / 20 A 36 A @ combined terminal			30 A / 20 A 36 A @ combined terminal	
Number of MPP trackers / fused strings per MPP tracker	1 / 4 (DC disconnect)										
Output (AC)											
AC nominal power	5000 W			6000 W			7000 W			7680 W	8000 W
Max. AC apparent power	5000 VA			6000 VA			7000 VA			8000 VA	
Nominal AC voltage / adjustable	208 V / ●	240 V / ●	277 V / ●	208 V / ●	240 V / ●	277 V / ●	208 V / ●	240 V / ●	277 V / ●	240 V / ●	277 V / ●
AC voltage range	183 - 229 V	211 - 264 V	244 - 305 V	183 - 229 V	211 - 264 V	244 - 305 V	183 - 229 V	211 - 264 V	244 - 305 V	211 - 264 V	244 - 305 V
AC grid frequency; range	60 Hz; 59.3 – 60.5 Hz			60 Hz; 59.3 – 60.5 Hz			60 Hz; 59.3 – 60.5 Hz			60 Hz; 59.3 – 60.5 Hz	
Max. output current	24 A	21 A	18 A	29 A	25 A	22 A	34 A	29 A	25 A	32 A	
Power factor (cos φ)	1			1			1			1	
Phase conductors / connection phases	1 / 2	1 / 2	1 / 1	1 / 2	1 / 2	1 / 1	1 / 2	1 / 2	1 / 1	1 / 2	1 / 1
Harmonics	< 4%			< 4%			< 4%			< 4%	
Efficiency											
Max. efficiency	96.7%	96.8%	96.8%	96.9%	96.8%	97.0%	97.1%	96.9%	97.0%	96.3%	96.5%
CEC efficiency	95.5%	95.5%	95.5%	95.5%	95.5%	96.0%	95.5%	96.0%	96.0%	96.0%	96.0%
Protection devices											
DC reverse-polarity protection	●			●			●			●	
AC short circuit protection	●			●			●			●	
Galvanically isolated / all-pole sensitive monitoring unit	●/–			●/–			●/–			●/–	
Protection class / overvoltage category	I / III			I / III			I / III			I / III	
General data											
Dimensions (W / H / D) in mm (in)	470 / 615 / 240 (18.5 / 24 / 9)										
DC Disconnect dimensions (W / H / D) in mm (in)	187 / 297 / 190 (7 / 12 / 7.5)										
Packing dimensions (W / H / D) in mm (in)	390 / 580 / 800 (16 / 23 / 31.5)										
DC Disconnect packing dimensions (W / H / D) in mm (in)	370 / 240 / 280 (15 / 9 / 11)										
Weight / DC Disconnect weight	64 kg (141 lb) / 3.5 kg (8 lb)									66 kg (145 lb) / 3.5 kg (8 lb)	
Packing weight / DC Disconnect packing weight	67 kg (147 lb) / 4 kg (9 lb)									69 kg (152 lb) / 4 kg (9 lb)	
Operating temperature range (full power)	–25 °C ... +45 °C (–13 °F ... +113 °F)										
Noise emission (typical)	44 dB(A)			45 dB(A)			46 dB(A)			49 dB(A)	
Internal consumption at night	0.1 W			0.1 W			0.1 W			0.1 W	
Topology	LF transformer			LF transformer			LF transformer			LF transformer	
Cooling concept	OptiCool			OptiCool			OptiCool			OptiCool	
Electronics protection rating / connection area	NEMA 3R / NEMA 3R			NEMA 3R / NEMA 3R			NEMA 3R / NEMA 3R			NEMA 3R / NEMA 3R	
Features											
Display: text line / graphic	●/–			●/–			●/–			●/–	
Interfaces: RS485 / *Bluetooth*	o/o			o/o			o/o			o/o	
Warranty: 10 / 15 / 20 years	●/o/o			●/o/o			●/o/o			●/o/o	
Certificates and permits (more available on request)	UL1741, UL1998, IEEE 1547, FCC Part 15 (Class A & B). CSA C22.2 No. 107.1-2001										
NOTE: US inverters ship with gray lids.											
Data at nominal conditions											
● Standard features o Optional features – Not available											
Type designation	SB 5000US			SB 6000US			SB 7000US			SB 8000US	

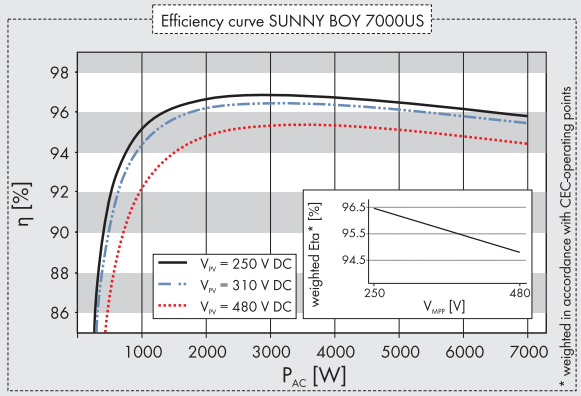

Accessories

RS485 interface
485USPB-SMC-NR

Bluetooth® Piggy Back
BTPBINV-NR

Combi-Switch
DC disconnect and PV array combiner box
COMBO-SWITCH

Combiner Box
Simplify wiring for added convenience and safety
SBCB-6-3R or SBCB-6-4

SUNNYBOY5678DUS103927 Sunny Boy, OptiCool, and SMA are registered trademarks of SMA Solar Technology AG. Text and figures comply with the state of the art applicable when printing. Subject to technical changes. We accept no liability for typographical and other errors. Printed on chlorine-free paper.

Toll Free +1 888 4 SMA USA
www.SMA-America.com

SMA America, LLC

TECHNICAL NOTE

Topic: DC Input Current Ratings for Sunny Boy Inverters

SUMMARY

The technical data in the SMA product data sheets is specified for nominal operating conditions. The specified DC maximum input current refers to the actual continuous input current recommended for an optimum energy yield of the system.

DC INPUT CURRENT RATINGS FOR SUNNY BOY SYSTEMS

The DC maximum input current specified in the Sunny Boy product data sheets refers to the actual continuous input current recommended for an optimum energy yield of the system.

Due to the common Maximum Power Point (MPP) characteristics of the inverter input, the inverter will not be able to find the optimal power point if the current is outside of the specified range. In that case, losses in energy yield can occur. However, the inverter will not be affected if the short circuit current of the connected PV modules exceeds the specified value. The following table shows the DC input current specifications of the Sunny Boy US-type inverters as well as the respective short circuit current of the connected PV strings (considering 125% NEC factor). These values are recommended for an optimum energy yield of the system:

Inverter model	**Rated DC maximum input current I_{MP}** (continuous)	**Maximum short circuit current of connected PV strings I_{SC}** (considering 125% NEC factor)
SB 3000US	17 Amp	22 Amp
SB 4000US	18 Amp	23 Amp
SB 5000US	21 Amp	27 Amp
SB 6000US	25 Amp	32 Amp
SB 7000US	30 Amp	38 Amp

In addition, the current limitations for any system with SMA Sunny Boy inverters SB 3000US, SB 4000US, SB 5000US, SB 6000US and SB 7000US with respecitive SMA DC Disconnect model are defined by the physical current limitations of the DC disconnect and the integrated string fuses:

» The maximum string fuse rating of the SMA DC disconnect unit is 20 Amp. The NEC requires that all fuses and wiring be sized for a minimum of 1.56 times the I_{SC} of the PV module used in the system. Consequently, the maximum short circuit current per string can be up to 12.8 Amp.

» The maximum operating current of the DC disconnect unit (all parallel strings combined) is 34 Amp.

If there are additional questions or if further clarification is needed, please refer to the inverter manual or contact technical support at SMA America, LLC.

SMA America, LLC
4031 Alvis Court
Rocklin, CA 95677
+1 916 625 0870
Service@SMA-America.com

TECHNSBDCINPU-HUS094011

Sockets For KU Series Relays Through 3 Poles

Socket Selection Table

Stock items are boldfaced.

For KUP, KUEP, KUGP, KUIP, and KUMP relays, through 3 poles, with .187" (4.75mm) quick connect termination.

Socket	Socket Termination	Hold-Down Spring
27E043	Solder eyelet	20C228 or 20C254*
27E046	PC board, .144" (3.66mm) terminals	20C228 or 20C254
27E067	.187" (4.75mm) quick connect	20C228 or 20C254
27E121	Screw terminals	20C314 (2 per socket required)
27E305	PC board, .184" (4.67mm) terminals	20C228 or 20C254
27E396	.187" (4.75mm) quick connect*	20C254
27E893	Screw terminals†	20C318

* 20C228 held in place by socket hold-down screw where as 20C254 snaps onto socket.
** Snap-in mounting.
† DIN rail mounting.

Hard Mount Sockets For Relays Through 3 Poles

Nylon sockets with .187" (4.75mm) quick connect, solder or printed circuit terminals are available for KUEP, KUGP, KUIP, KUMP, and KUP relays, through 3 poles, with .187" (4.75mm) quick connect terminals.
All are rated 15 amps and UL recognized, File E59244 and CSA certified File LR15734

27E043–with solder eyelet terminals.
27E067–with .187" (4.75mm) quick connect terminals.

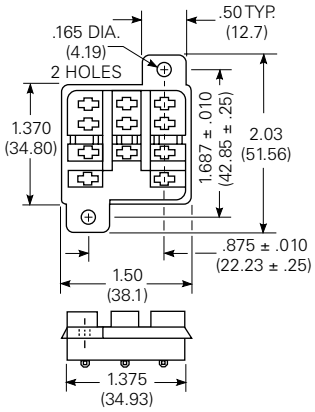

27E043

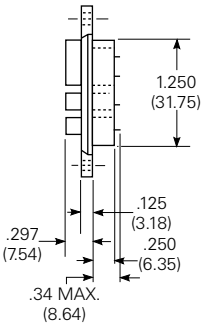

27E067

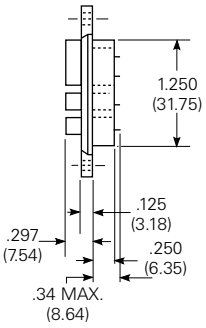

The 27E043 and 27E067 use chassis cutout shown on this page.

27E046, 27E305 Socket With Printed Circuit Terminals

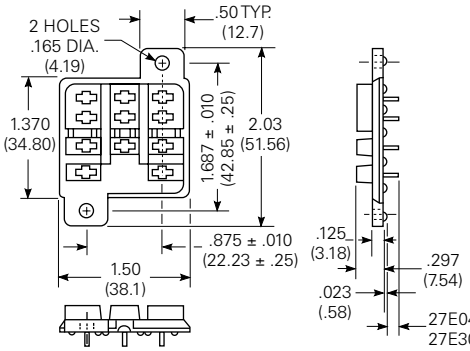

Suggested Socket PC Board Layout

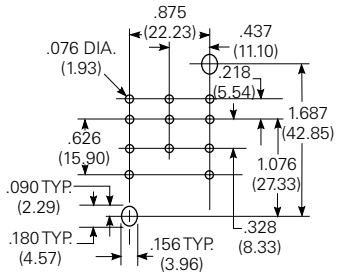

27E046 HAS TERMINALS .144" (3.66 mm) LONG.
27E305 HAS TERMINALS .184" (4.67 mm) LONG.

27E396 Snap-In Socket For Relays Through 3 Poles

Nylon snap-in socket with .187" (4.75mm) quick connect terminals is available for KUEP, KUGP, KUIP, KUMP, and KUP relays, through 3 poles, with .187" (4.75mm) quick connect terminals. Snap-in sockets reduce labor by eliminating time consuming screw or rivet mounting. Preassembled wiring harnesses may also be used as the sockets are designed to snap into the chassis from either front or back. All are rated 15 amps and UL recognized, File E59244. The 27E396 uses chassis cutout shown on this page.

27E396–with .187" (4.75mm) quick connect terminals.

Recommended Chassis Cutout For Hard Mount Sockets

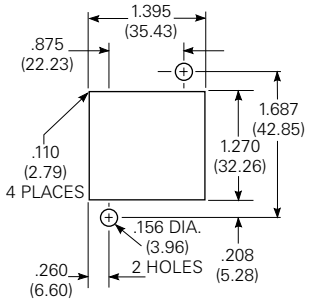

Recommeded Chassis Cutout For Snap-In Sockets

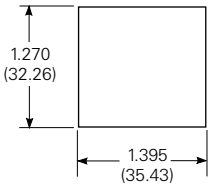

Recommended chassis thickness .031" (.79mm) to .062" (1.57mm).

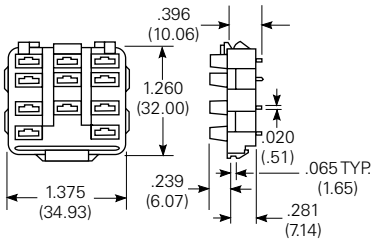

Sockets For KU Series Relays Through 3 Poles (continued)

27E121
Screw Terminal Socket

The 27E121 socket offers screw termination for KUEP, KUGP, KUIP, KUL, KUMP and KUP relays, through 3 poles, with .187" (4.75mm) quick connect terminals. This socket stacks on 1.700" (43.18mm) centers. When surface mounting, two #6-32 screws of suitable length are required. When track mounting, two 24A071 retainer clips (not shown) are required. The 27E121 is rated 15 amps and is UL recognized, File E59244, CSA certified, File LR15734.

27E893
Screw Terminal, Din Rail Snap-Mount Socket
(use with mounting track 24A110)

The 27E893 DIN rail, snap-mount socket offers screw termination for KUEP, KUGP, KUIP, KUL, KUMP and KUP relays, through 3 poles, with .187" (4.75mm) quick connect terminals. This socket is constructed with a spring-loaded latch which allows it to be quickly snapped onto or removed from a "top hat" style mounting track. No special tools or extra hardware is required for installation. The 27E893 is UL rated 15 amps, 94V-0, File E59244 and CSA rated 10 amps, File LR15734.

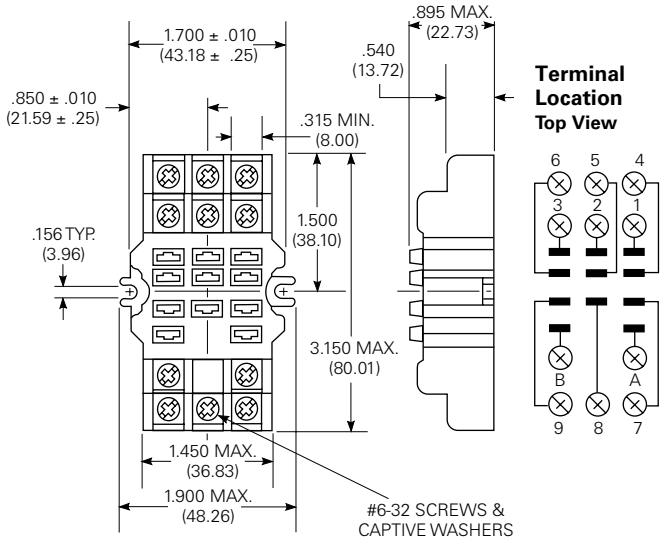

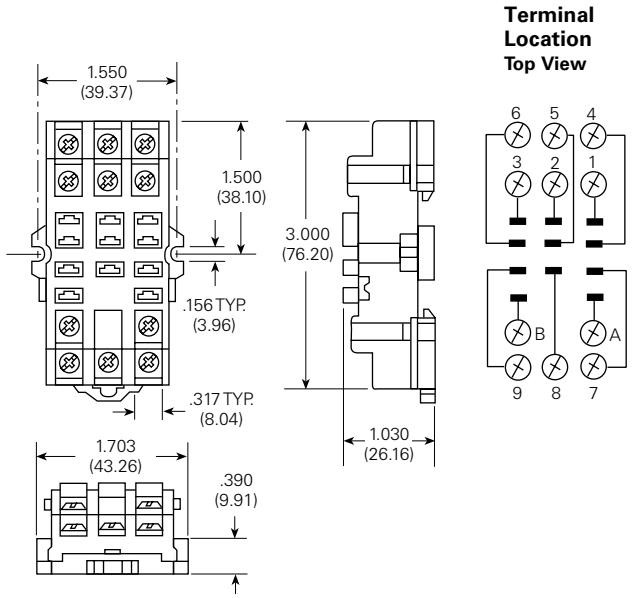

Sockets For KU Series 4 Pole Relays

Socket Selection Table
Stock items are boldfaced.

For 4 pole KUP relays with .110" (2.79mm) quick connect termination.

Socket	Socket Termianation	Hold-Down Spring
27E415	.187" (4.75mm) quick connect	20C228 or 20C254
27E419	PC board	20C228 or 20C254
27E867*	Screw terminals	20C254

* Use 40G432 insulator pad or customer supplied alternative.

Hard Mount Sockets For 4 Pole Relays

27E415–with .187" (4.75mm) quick connect/solder terminals.
27E419–with printed circuit terminals. See PC board layout at right.

Note: Only 4 pole KUP relays with .110" (2.79mm) quick connect terminals can be used with 4 pole hard mount sockets.

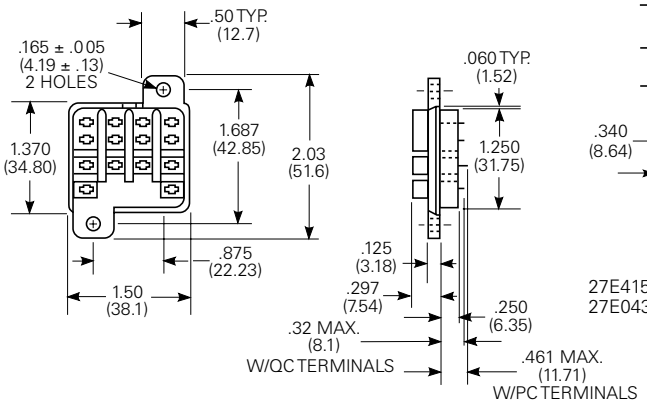

Suggested Socket PC Board Layout

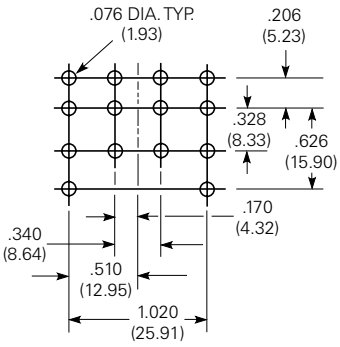

27E415 uses same chassis cutout as 27E043.

Screw Terminal Socket For 4 Pole Relays

27E867 offers screw termination for 4 pole KUP relays with .110" (2.79mm) quick connect/socket mount terminals. Rated 10 amps and is UL recognized, File E59244.

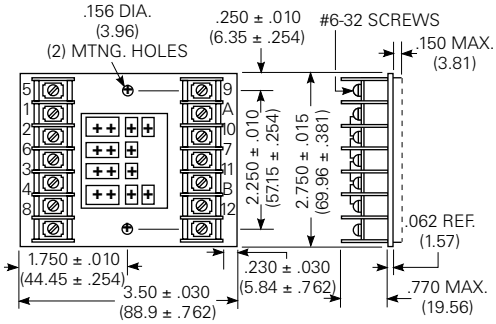

Dimensions are shown for reference purposes only.
Dimensions are in inches over (millimeters) unless otherwise specified.
Specifications and availability subject to change.
www.tycoelectronics.com
Technical support:
Refer to inside back cover.

PV module

Installation Instructions

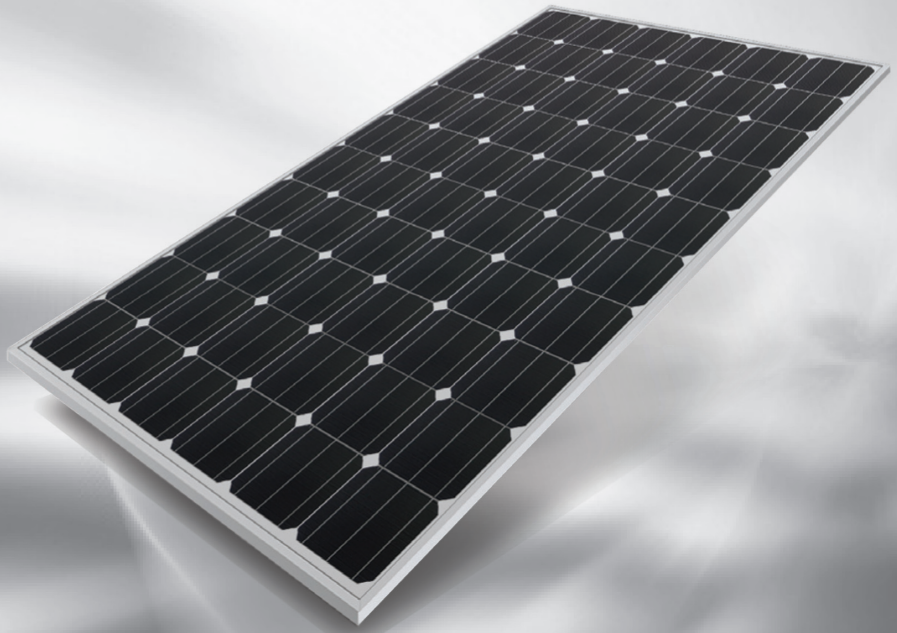

- READ THIS INSTALLATION INSTRUCTION IN THIS ENTIRETY BEFORE INSTALLING, WIRING OR UISING THIS PRODUCTION IN ANY WAY.
- LESEN SIE DIESE INSTALLATIONSANWEISUNG VOLLSTÄNDIG DURCH, EHE SIE DAS PRODUKT INSTALLIEREN, ANSCHLIESSEN ODER SONST WIE VERWENDEN.
- SI RACCOMANDA DI LEGGERE COMPLETAMENTE QUESTE ISTRUZIONI PRIMA DI INSTALLARE, CABLARE O UTILIZZARE IN QUALSIASI MODO IL PRODOTTO
- VEUILLEZ LIRE CES INSTRUCTIONS D'INSTALLATION DANS LEUR INTÉGRALITÉ AVANT L'INSTALLATION, LE CÂBLAGE OU L'UTILISATION DE CE PRODUIT
- LEA ESTAS INSTRUCCIONES DE INSTALACIÓN EN SU TOTALIDAD ANTES DE INSTALAR, CABLEAR O USAR ESTE PRODUCTO DE CUALQUIER FORMA

inspire the world, create the future

SAMSUNG

introduction (english)

This manual contains important installation, maintenance and safety information. The word “module” as used in this manual refers to one or more photovoltaic modules.
Please retain this manual for future reference.

IMPORTANT!
Please read this sheet in its ENTIRETY before installing, wiring or using this product in any way.
Failure to comply with these instructions will invalidate the Samsung Limited Warranty for PV Modules.

DISCLAIMER OF LIABILITY

Samsung accepts no liability for the usability and functionality of its solar modules if the instructions in this guide are not followed. Since compliance with this guide and the conditions and methods of installation, operation, use and maintenance of the modules are not checked or monitored by Samsung; Samsung accepts no liability for damage arising from improper use or incorrect installation, operation, use or maintenance.

The information in this manual is believed to be reliable, but does not constitute an expressed and/or implied warranty.

As part of Samsung’s policy of continuous improvement, Samsung reserves the right to change product specifications at any time without prior notice.

einleitung (deutsch)

Dieses Handbuch enthält wichtige Informationen für Installation, Wartung und Sicherheit. Der in diesem Handbuch verwendete Begriff „Modul“ bezeichnet eines oder mehrere der Solarmodule. Bewahren Sie diese Bedienungsanleitung zum späteren Nachschlagen auf.

WICHTIG!
Lesen Sie diese Information VOLLSTÄNDIG, ehe Sie das Produkt installieren, anschließen oder sonst wie verwenden.
Bei Nichtbeachtung dieser Anweisungen entfällt die Samsung-Garantie für die PV-Module.

HAFTUNGSAUSSCHLUSS

Samsung übernimmt keine Haftung für die Verwendbarkeit und Funktionstüchtigkeit ihrer Solarmodule, wenn die Anweisungen in diesem Handbuch nicht befolgt wurden. Die Einhaltung dieses Handbuchs und der Bedingungen und Methoden für Installation, Betrieb, Verwendung und Wartung der Module wird von Samsung weder geprüft noch überwacht. Samsung übernimmt keine Haftung für Schäden, die sich aus unsachgemäßer Verwendung oder Fehlern bei Installation, Betrieb, Verwendung oder Wartung ergeben.

Die Informationen in diesem Handbuch sind nach bestem Wissen richtig, daraus ist aber keine vertragliche oder gesetzliche Garantie abzuleiten.

In Rahmen von Samsungs Politik ständiger Verbesserung behält sich das Unternehmen das Recht vor, die technischen Daten des Produkts ohne vorherige Kündigung jederzeit zu ändern.

introduzione (italiano)

Questo manuale contiene informazioni importanti sull'installazione, la manutenzione e la sicurezza. In questo manuale, il termine "modulo" viene utilizzato con riferimento a uno o più moduli fotovoltaici. Conservare questo manuale per futuri riferimenti.

IMPORTANTE!
Leggere COMPLETAMENTE questo manuale prima di installare, cablare o utilizzare in qualsiasi modo il prodotto.
La mancata osservanza di queste istruzioni comporta l'annullamento della garanzia limitata di Samsung per i moduli FV.

ESCLUSIONE DI RESPONSABILITÀ

In caso di mancata osservanza delle istruzioni fornite in questo manuale, Samsung declina ogni responsabilità in merito all'idoneità all'uso e al funzionamento dei suoi moduli solari. Poiché la conformità con le istruzioni fornite in questa guida, le condizioni e i metodi di installazione, di funzionamento, di utilizzo e di manutenzione dei moduli non vengono verificate e monitorate da Samsung, Samsung declina ogni responsabilità per danni dovuti a uso improprio o errata installazione, funzionamento, utilizzo o manutenzione del prodotto.

Le informazioni fornite in questo manuale sono ritenute affidabili, ma non costituiscono alcuna garanzia implicita e/o esplicita.

In virtù della sua politica di costante miglioramento dei prodotti, Samsung si riserva il diritto di modificare le specifiche del prodotto in qualsiasi momento senza preavviso.

introduction (français)

Le présent manuel comporte des informations importantes relatives à la sécurité, l'entretien et l'installation du produit. Le mot « module » y est utilisé pour désigner un ou plusieurs modules photovoltaïques.
Veuillez conserver ce manuel pour référence ultérieure.

IMPORTANT!
Veuillez lire cette fiche dans son INTÉGRALITÉ avant l'installation, le câblage ou l'utilisation de ce produit.
Le non-respect de ces instructions annule la garantie limitée Samsung pour les modules photovoltaïques.

CLAUSE DE NON-RESPONSABILITÉ

En cas de non-respect des instructions du présent manuel, Samsung décline toute responsabilité quant au fonctionnement des modules photovoltaïques. Les conditions et les méthodes d'installation, d'utilisation et d'entretien, tout comme le respect des instructions du présent manuel ne sont pas contrôlés par Samsung. Les dommages dus à une utilisation non conforme, ou à une installation ou un entretien incorrects n'engagent en aucun cas la responsabilité de Samsung.

Les informations du présent manuel sont fiables, mais ne constituent en aucun cas une garantie explicite et/ou implicite.

Dans le cadre de la politique d'amélioration continue de ses produits, Samsung se réserve le droit de modifier les spécifications du produit sans préavis.

introducción (español)

Este manual contiene información importante sobre la instalación, el mantenimiento y la seguridad. La palabra “módulo” utilizada en este manual se refiere a uno o más módulos fotovoltaicos.
Conserve este manual para consultas futuras.

IMPORTANTE
Lea estas instrucciones EN SU TOTALIDAD antes de instalar, cablear o usar este producto de cualquier forma.
Si no se siguen estas instrucciones quedará invalidada la garantía limitada de Samsung de los módulos fotovoltaicos.

DESCARGO DE RESPONSABILIDAD

Samsung no acepta ninguna responsabilidad por el uso y la funcionalidad de sus módulos solares, si no se siguen las instrucciones de esta guía. Dado que Samsung no comprueba ni supervisa el cumplimiento de esta guía ni las condiciones y métodos de instalación, funcionamiento, uso y mantenimiento de los módulos, Samsung no acepta ninguna responsabilidad derivada de los daños por uso inapropiado, falta de seguimiento de las instrucciones de instalación ni por un mantenimiento, uso o funcionamiento incorrectos.

La información de este manual se considera fiable, pero no conforma una garantía expresa ni implícita.

Conforme a la política de Samsung por una mejora continua, Samsung se reserva el derecho de cambiar las especificaciones del producto en cualquier momento sin aviso previo.

specifications

		LPC235S	LPC238S	LPC241S	LPC244S	LPC247S	LPC250S
Performance at Standard Test Conditions (STC) : Irradiance 1000W/m², AM 1.5, and cell temperature 25°C							
Maximum power	P_{max} (Wp)	235	238	241	244	247	250
Maximum power voltage	V_{mp} (V)	29.9	30.0	30.1	30.3	30.4	30.5
Maximum power current	I_{mp} (A)	7.88	7.94	8.01	8.07	8.14	8.20
Open circuit voltage	V_{oc} (V)	37.2	37.3	37.4	37.5	37.6	37.6
Short circuit current	I_{sc} (A)	8.47	8.51	8.54	8.58	8.62	8.66
Module efficiency		14.68%	14.87%	15.06%	15.24%	15.43%	15.62%
Performance at Nominal Operating Cell Temperature (NOCT) : Irradiance 800 W/m², NOCT, AM 1.5							
Maximum power	P_{max} (Wp)	188	190	194	196	198	200
Maximum power voltage	V_{mp} (V)	30.4	30.2	30.3	30.4	30.5	30.9
Maximum power current	I_{mp} (A)	6.21	6.31	6.43	6.48	6.49	6.51
Open circuit voltage	V_{oc} (V)	37.2	37.3	37.4	37.3	37.4	37.6
Short circuit current	I_{sc} (A)	6.65	6.66	6.84	6.88	6.89	6.90

The rated power may only vary by -0W/+2.99W and all other electrical parameters by ± 3%

System integration parameters	
Maximum system voltage (IEC)	1,000 VDC
Maximum system voltage (UL)	600 VDC
Maximum series fuse rating	15 A
Maximum reverse current	Do not apply external voltages larger than Voc to the module
Fire Safety Classification	Class C
Certifications	IEC 61215, ICE61730, UL1703

Physical characteristics	
Cells per module	60
Cell type	Mono-crystalline silicon
Module dimensions	1630x982x47mm (64.17x36.66x1.85 inch)
Module weight	18.6kg (41 lbs)
Junction box	IP65
Frame	Anodized Aluminum
Front Glass	3.2mm(0.13inches) Tempered glass

Figure 1 - Dimension of PV Module

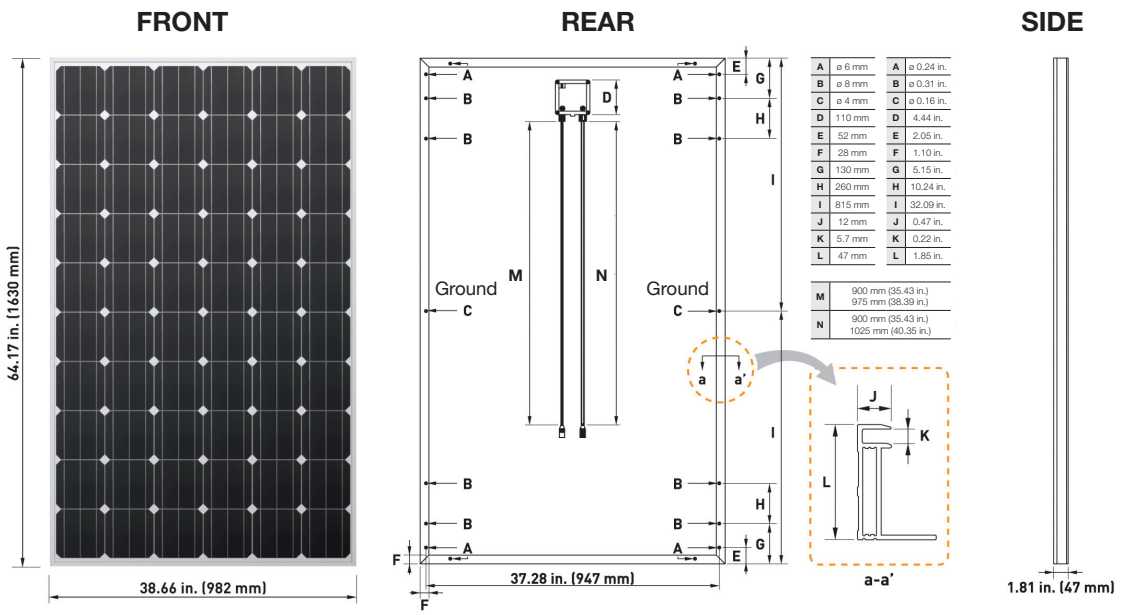

GROUNDING HARDWARE

Grounding hardware	Dimension & material	Remarks
Hexagon bolt & nut	10# stainless	Length of bolt: 30 mm
Flat washer	10# stainless	-
Flexible washer	10# stainless	-
Star washer	10# stainless	-
Cup washer	10# stainless	-
Ground Ring Terminal Ground wire	10# stainless #12 Wire	-

Figure 2 - Grounding method

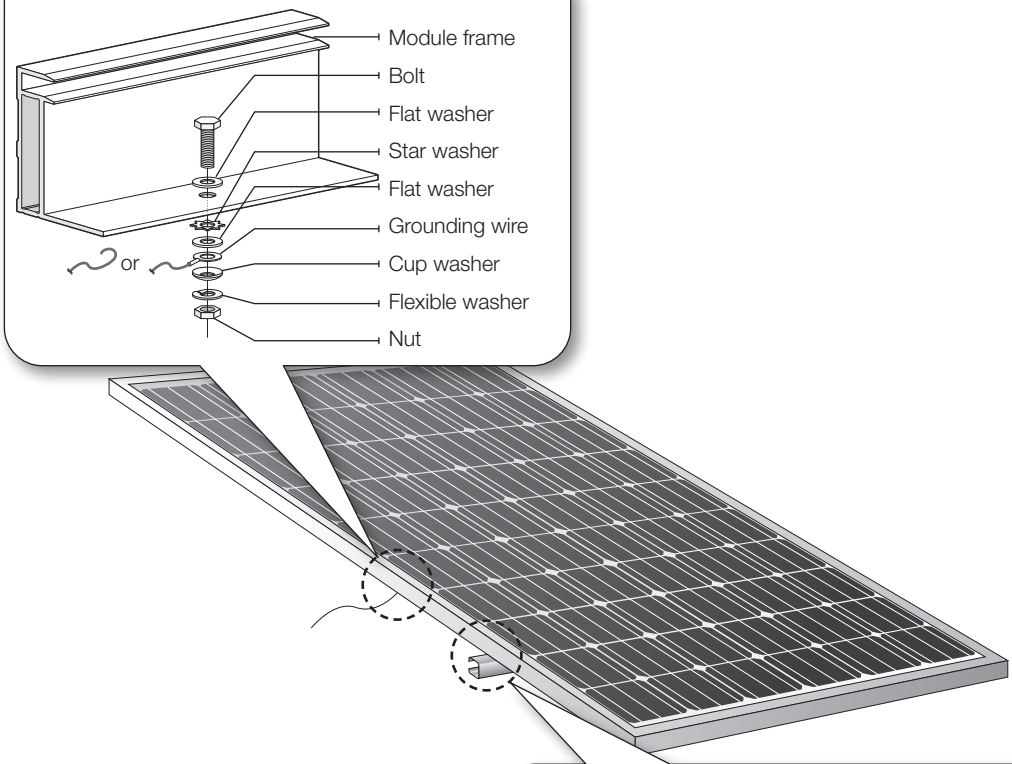

Figure 3 - Module mounting method

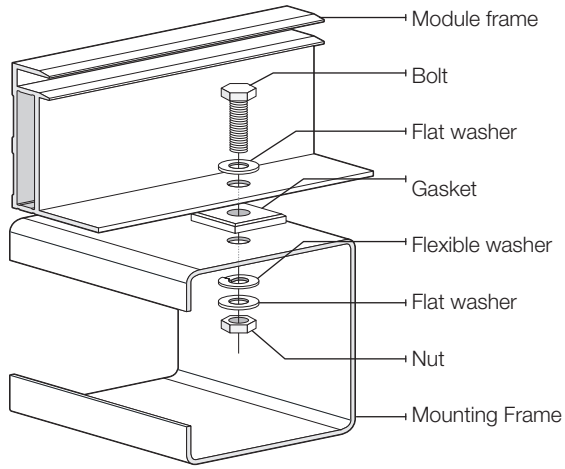

contents

ENGLISH 8

8 GENERAL SAFETY INFORMATION
9 UNPACKING AND STORING MODULES
9 INSTALLATION
10 WIRING
11 MAINTENANCE
11 DISPOSAL CONSIDERATIONS

DEUTSCH 12

12 ALLGEMEINE SICHERHEITSHINWEISE
13 AUSPACKEN UND LAGERN DER MODULE
13 INSTALLATION
14 ELEKTROANSCHLUSS
15 WARTUNG
15 HINWEISE ZUR ENTSORGUNG

ITALIANO 16

16 INFORMAZIONI GENERALI SULLA SICUREZZA
17 DISIMBALLAGGIO E STOCCAGGIO DEI MODULI
17 INSTALLAZIONE
18 CABLAGGIO
19 MANUTENZIONE
19 SMALTIMENTO

FRANÇAIS 20

20 INFORMATIONS GÉNÉRALES RELATIVES À LA SÉCURITÉ
21 DÉSEMBALLAGE ET ENTREPOSAGE DES MODULES
21 INSTALLATION
22 CÂBLAGE
23 ENTRETIEN
23 MISE AU REBUT

ESPAÑOL 24

24 INFORMACIÓN GENERAL DE SEGURIDAD
25 DESEMBALAJE Y ALMACENAMIENTO DE LOS MÓDULOS
25 INSTALACIÓN
26 CABLEADO
27 MANTENIMIENTO
27 OBSERVACIONES SOBRE LA ELIMINACIÓN

general safety information

All safety instructions in this document should be read and understood before installing this device.

Before installing modules, contact the appropriate authorities to determine permissions, installation and inspection requirements, which should be followed. Refer to applicable regional and local codes.

WARNING!
Module interconnection cables pass direct current (DC) and are sources of voltage when the module is under load and when it is exposed to light.
Direct current can arc across gaps and may cause injury or death if improper connection or disconnection is made, or if contact is made with modules that are frayed or torn. Do not connect or disconnect modules when current from the modules or an external source is present.
Installation should be performed only by authorized personnel.

Installing a PV system requires specialized knowledge, especially the installation and wiring of the PV modules. This work should only be carried out by suitably qualified and authorized persons.

TO AVOID THE HAZARD OF ELECTRIC SPARKS, SHOCK, FIRE, BURNS, DAMAGE AND INJURY;

- Children and animals should not be allowed near the installation while work is being carried out.
- Avoid electrical discharges when installing, cabling, starting-up, or performing maintenance on the module.
- A module generates electricity when it is exposed to sunlight or to other sources of light. Completely cover surface of the module with an opaque material before making or breaking electrical connections.
- Do not install or handle the modules or tools when they are wet or during periods of high wind.
- Do not install the module where there are gases or flammable vapors, as they can create sparks.
- Remove all metallic jewelry prior to installing this product to reduce the chance of accidental exposure to live circuits.
- Wear suitable clothing, guards, and gloves to prevent you from direct contact with 30 VDC or greater.
- Use insulated tools to reduce your risk of electric shock.
- There are no user serviceable parts within the module. Do not attempt to repair any part of the module.
- Do not stand on, drop, scratch, or allow object to fall on modules.
- If the front glass is broken, or the back sheet is torn, contact with any module surface or module frame can cause electric shock. Do not puncture, cut, scratch or damage the glass or back sheet of a module. Back sheet damage will void a module's Limited Warranty and may cause fire. Never use modules with a damaged back sheet.
- Broken junction-boxes and/or broken connectors are electrical hazards as well as laceration hazards. The dealer or installers should remove the module from the array and contact the supplier for disposal instructions.
- Never rest or leave a module unsupported or unsecured.
- Do not artificially concentrate sunlight on a module.
- Do not touch the junction box terminals.
- Do not change the wiring of bypass diodes.
- If batteries are used with the module, follow all recommendations indicated by the battery manufacturer for safety.
- Completely ground all modules.
- When installing on a roof, ensure that the module is attached with a mechanical fastening. The roof should have an adequate level of fire-resistance for the application.
- Contact your module supplier if maintenance is necessary.

CAUTIONS!
Use a module for its intended purpose only. Do not treat the back sheet, frame, or front surface with paint or adhesives, to avoid reducing its functionality, damage and causing inoperable conditions, and other unknown troubles.

unpacking and storing modules

GENERAL

Warnings and instructions on the packaging should be observed. A record of the module serial numbers should be made before installation and this should be included in the system documentation. Samsung modules are sent in boxes that are specially designed to provide the proper protection during shipping. It is advised to not remove the modules from the boxes until installation. If it is necessary to put the modules into temporary storage, they should be kept in dry and properly ventilated room.

Modules should be handled with care

The following points need to be observed when the modules are being unpacked, transported or stored:

- Wear non-slip gloves and carry a module by its frame with two or more people.
- Modules should be carried using both hands; the junction box should NOT be used as a grip.
- Modules should not be allowed to sag or bow under their own weight when being carried.
- Modules should not be subjected to loads/stresses and should not be stepped on or dropped.
- All electrical contacts should be kept clean and dry.

installation

MECHANICAL INSTALLATION

- Modules must be securely fastened using support frames or mounting kit specialized for PV applications.
- Modules should be firmly fixed in place in a manner suitable to withstand all expected loads, including wind and snow loads.
- Install modules where they are not shaded by obstacles like buildings and trees. Especially pay attention to avoid partially shading the modules by objects during the daytime.
- Care must be taken to avoid low tilt angles which may cause dirt to build-up on the glass against the frame edge.
- Clearance between the roof surface and module frame is required to allow cooling air to circulate around the back of the module. This also allows any condensation or moisture to dissipate. Install modules so that air can circulate between the roof and the module. (100 mm: 4 inch gap minimum)
- In order to prevent water from entering the junction box, which could present a safety hazard, modules should not be mounted such that the front glass faces downward (e.g. on a tracking structure that positions the modules with the junction box facing skyward during sleep mode).
- Great care should be exercised to ensure that corrosion caused by the grounding means be avoided.
- Metals used in locations that are exposed to moisture shall not be employed alone or in combinations that could result in deterioration or corrosion. Thus, all fasteners (nuts, bolts, washers, screws, etc.) must be stainless steel unless otherwise specified.
- Refer to the applicable regional and local codes on grounding PV arrays and mounting frames for specific requirements. (E.g. lightning protection). In the US the array frame shall be grounded in accordance with NEC Article 250.
- Length of self-tapping screw or bolt should not be more than 0.78” (20 mm) in order to avoid contacting the back-sheet of the module.
- Recommendation of bolt torque range: 16N.m to 20N.m.
- Contact an Authorized Representative with questions regarding mounting profiles for modules if needed.

GROUNDING

- Attach an equipment ground conductor with stainless steel hardware at one of the two designated Ø4 groundings holes on the module frame. If an equipment ground conductor larger in diameter than 5.5 mm (#10 AWG) is necessary, a grounding lay-in-lug is required when using self-drilling type screw to make the frame ground connection. Please refer to NEC Article 690 on grounding PV arrays for special requirements.
- Modules can be grounded using third-party grounding washer or clip systems provided they have been tested and certified **to local regulation** on anodized aluminum frame and are installed according to the manufacture’s specified instructions.
- If the grounding method above is adopted, please choose one of the two grounding holes (Figure 2) and use the grounding hardware with appropriate tools such as a wrench, clips or others to ground the wires in accordance with the requirements imposed by the above hardware.

MOUNTING

- Always follow the mounting equipment vendors’ installation instructions in addition to these instructions. In cases where the vendors’ instructions are more stringent than those of Samsung, the vendors’ instruction shall apply.

1 - Pressure Clamps or Clips:

Mount the module with the clips on the side frame of the module. The side frames are attached to the longer sides of the module. The centerline of the clips should be 6” (152.4 mm) to 15” (381 mm) from the end of the side frame. Installers should ensure the clamps are of sufficient strength to allow for the maximum design pressure of the module.

The metal clamp must fulfill the following specifications:

Size	Thickness	Material
not less than 1.5” (38 mm) width	not less than 0.12” (3 mm)	aluminum alloy

2 - Frame Holes:

Secure the module to the structure using the factory mounting holes (Figure 3). Four 1/4” stainless steel bolts, with nuts washers and lock washers are recommended per module.

ELECTRICAL INSTALLATION

- Under normal conditions, a photovoltaic module is likely to experience conditions that produce more current and/or voltage than reported at standard test conditions. Accordingly, the values of ISC and VOC marked on this module should be multiplied by a factor of 1.25 when determining component voltage ratings, conductor ampacities, fuse sizes, and size of controls connected to the PV output.
- The modules should not be configured in such way that they create a voltage higher than the permitted system voltage.
- National electrical codes and regulations should be strictly followed.
- PV Modules may be connected in series or parallel to achieve the desired electrical output as long as certain conditions are met. Use only the same type of modules in a combined source circuit.
- If the modules are to be connected together in series they should have the same amperage.
- If they are to be connected in parallel they should have the same voltage. String configuration should be planned and carried out in accordance with inverter manufacturer’s instructions.
- The number of modules connected to an inverter should be within the inverter voltage limits/operating range and the design of the string configuration(s) should comply with the inverter’s manufacturer’s guidelines.
- Blocking diodes prevent current flowing from the battery to the module when no electricity is being generated. It is recommended to use blocking diodes when a charging regulator is not used.

OPERATING CONDITIONS

All Samsung modules require that modules be operated within the following Operating Conditions:

1. Terrestrial applications only – no outer space or Special Conditions (see below)
2. The ambient temperature must be within -40 °C (-40 °F) to +90 °C (194 °F).
3. The wind pressure load of the installation site should be less than 2400 Pascal.
4. Some environmental conditions could apply. Please refer to Samsung’s warranty exclusions.

wiring

GENERAL

- All wiring should be done in accordance with applicable electrical codes.
- A qualified, licensed professional should do all wiring.
- Wiring should be protected to help ensure personal safety and to prevent its damage.
- All modules connected in series should be of the same model number and/or type.

MODULE WIRING

- Check local temperature conditions and follow the National Electric Code (eg. NEC 690.7 for USA, DIN VDE 0100 Teil 712 for Germany) to ensure compliance with maximum voltage limitations.
- Modules are not designed for “off-grid” or battery charging systems, because of their operating voltage. Therefore, it is not recommended to use them to charge batteries.
- These modules contain factory installed bypass diodes. If these modules are incorrectly connected to each other, the bypass diodes, cable, or junction box may be damaged.

ARRAY WIRING

- The term “array” is used to describe the assembly of several modules on a support structure with associated wiring.
- Samsung recommends that all wiring be double insulated with a minimum rating of 90 °C (194 °F). All wiring should use flexible copper (Cu) conductors. The minimum size should be determined by the applicable codes.
- PV Modules may be wired in series to produce the desired voltage output. Do not exceed the maximum system voltage.
- PV Modules may be wired in parallel to produce the desired current output. Refer to the applicable regional and local codes for additional fusing requirements and limitations on the maximum number of PV Modules in parallel.

MODULE TERMINATIONS

- A junction box as a terminal enclosure is equipped for electrical connections.

JUNCTION BOX AND TERMINALS

- The junction boxes of the modules are in the back of the modules.
- Each module is equipped with one junction box containing terminals for both positive and negative polarity, and bypass diodes.
- The polarity should be respected in the connections to ensure the correct operation of the modules with the polarity symbols engraved onto the body of the junction box.

DIODES

- The shading of a cell can cause it to have reserve voltage. This cell will therefore consume the power generated by the others cells in the series, producing an undesired heating of the shaded cell.
- A hot spot effect is existent when a solar cell within a module generates less current than the string current of the module or of the PV generator. This occurs when the cell is totally or partially shaded, damaged, or when cells are electrically mismatched. The shaded cell becomes reverse biased and dissipates power in the form of heat.
- The use of protection, or bypass, diodes reduces the risk of heating of the shaded cells, limiting the current that can circulate through them and thereby avoiding breaks.
- All modules are equipped with factory installed bypass diodes. These diodes provide proper circuit protection for the systems within the specified system voltage, so that you do not need any other additional bypass diodes.
- Contact your Samsung Authorized Representative for proper diode type, if it is necessary to add or change diodes due to system specifications.

maintenance

If you need electrical or mechanical inspection or maintenance, it is recommended to have a licensed authorized professional carry out the inspection or maintenance to avoid the hazards of electric shock or injury.

MAINTENANCE COVERS THE FOLLOWING PROCESSES:

- Periodic cleaning of the module
- Visual inspection of possible internal deterioration of the water-tightness of the module
- Control of the state of the electrical connections and wiring
- Eventually, control of the electrical characteristics of the module

PERIODIC CLEANING OF THE MODULE

- Dirt on the module surfaces causes cell shading and can lead to reduced power output.
- It is recommended to clean the surface of the module with water and a soft cloth or sponge, twice or more per year.
- Under no circumstances should dirt be scraped or rubbed off the modules when dry, as this can cause micro-scratches on the surface of the modules and reduce the transparency of the module glass. Instead, a mild non-abrasive detergent may be applied for persistent dirt.

VISUAL INSPECTION OF THE MODULE

- Possible breaks in the glass
- All fasteners are secure, tight and free of corrosion.
- All electrical connections are secure, tight, clean, and free of corrosion
- The mechanical integrity of the cables is intact.
- All bonding points to Earth Ground are tight, secure, and free of corrosion to ensure continuity between the modules and ground.

CONNECTION AND WIRING CONTROL

- Electrical and mechanical connections should be preventively inspected every 6 month
- Check the fastening and state of the module's terminals of the connection cables
- Check the water-tightness of the terminal box

disposal considerations

This product must be disposed of in accordance with all relevant local, state and federal laws and regulations. It is the responsibility of the customer to ensure that his product is disposed of properly.

Please contact your local Samsung representative concerning the proper disposal of this product.

The return of any modules will not be accepted by Samsung unless prior written authorization has been given by Samsung.

allgemeine sicherheitshinweise

Lesen Sie alle Sicherheitshinweise in diesem Dokument gründlich durch, ehe Sie das Produkt installieren.

Die Installation eines PV-Systems erfordert Fachwissen, und zwar insbesondere die Installation und der elektrische Anschluss der PV-Module. Diese Arbeit darf nur von ausreichend qualifiziertem und dazu berechtigten Personen ausgeführt werden.

GEFAHR!

Die Modulverbindungskabel führen Gleichstrom und sind Spannungsquellen, wenn das Modul unter Last steht und Licht ausgesetzt ist. **Bei Gleichstrom kann es zu Lichtbögenbrücken und Verletzungen oder zum Tod kommen, wenn Stromanschlüsse unsachgemäß hergestellt bzw. getrennt werden oder wenn durchgescheuerte oder gerissene Module berührt werden.** Verbinden und trennen Sie keine Module, wenn Strom aus den Modulen oder einer externen Quelle anliegt. **Die Installation darf nur von dazu berechtigten Personen durchgeführt werden.**

Vor der Installation von Modulen wenden Sie sich an die zuständigen Behörden, um zu erfahren, welche Genehmigungen sowie Installations- und Inspektionsanforderungen zu erfüllen sind. Beachten Sie die regionalen und örtlichen Vorschriften.

VERHINDERN DER GEFAHR VON ELEKTROFUNKEN, STROMSCHLAG, FEUER, VERBRENNUNGEN, SCHÄDEN UND VERLETZUNGEN

- Während die Arbeiten ausgeführt werden, dürfen Kinder und Tiere nicht in die Nähe der Installation kommen.
- Vermeiden Sie elektrische Entladungen, wenn Sie das Modul installieren, schalten, in Betrieb nehmen oder Wartungsarbeiten daran vornehmen.
- Ein Modul erzeugt Strom, wenn es dem Sonnenlicht oder anderen Lichtquellen ausgesetzt wird. Bedecken Sie die Oberfläche des Moduls vor dem Herstellen oder Trennen elektrischer Verbindungen vollständig mit einem lichtundurchlässigen Material.
- Installieren und transportieren Sie die Module und Werkzeuge nicht, wenn sie nass sind oder wenn starker Wind herrscht.
- Installieren Sie das Modul nicht an Stellen mit Gasen oder leicht entzündlichen Dämpfen, da dadurch Funken gebildet werden können.
- Nehmen Sie metallhaltigen Schmuck ab, ehe Sie dieses Produkt installieren, weil dadurch die Gefahr von versehentlichem Kontakt mit Strom führenden Teilen reduziert wird.
- Tragen Sie geeignete Kleidung, Schutzvorrichtungen und Handschuhe, um sich vor direktem Kontakt mit 30 V= oder mehr zu schützen.
- Verwenden Sie isolierte Werkzeuge, um die Gefahr des elektrischen Schlags zu reduzieren.
- Es gibt im Modul keine Teile, die vom Benutzer gewartet werden dürfen. Versuchen Sie nicht, irgendwelche Teile des Moduls zu reparieren.
- Stellen Sie sich nicht auf Module, lassen Sie keine Gegenstände darauf fallen und achten Sie darauf, dass sie nicht zerkratzen.
- Wenn das Frontglas bricht oder die Rückwandbeschichtung zerrissen ist, kann die Berührung einer Moduloberfläche oder eines Modulrahmens einen Stromschlag verursachen. Durchbohren, schneiden, zerkratzen und beschädigen Sie das Glas und die Rückwandbeschichtung des Moduls nicht. Bei Beschädigung der Rückwandbeschichtung entfällt die Garantie des Moduls und ein Brand kann verursacht werden. Verwenden Sie niemals Module mit beschädigter Rückwandbeschichtung.
- Zerbrochene Anschlusskästen und/oder Anschlüsse bergen nicht nur die Gefahr eines Stromschlags sondern von Kratzwunden. Der Händler oder der Installateur muss das beschädigte Modul aus dem PV-Feld entfernen und sich für Entsorgungshinweise an den Lieferanten wenden.
- Lassen Sie Module niemals ohne Stütze oder Absicherung herumstehen.
- Konzentrieren Sie das Sonnenlicht nicht künstlich auf Modulen.
- Berühren Sie nicht die Klemmen am Anschlusskasten.
- Verändern Sie nicht die elektrischen Schaltungen von Bypassdioden.
- Wenn in Verbindung mit dem Modul Batterien verwendet werden, befolgen Sie zu Ihrer Sicherheit alle Sicherheitshinweise des Batterieherstellers.
- Erden Sie völlig alle Module.
- Achten Sie beim Installieren auf einem Dach darauf, dass das Modul mit einer mechanischen Halterung verbunden ist. Das Dach muss einen für diese Anwendung angemessenen Feuerwiderstand aufweisen.
- Wenden Sie sich nötigenfalls an den Lieferanten Ihres Moduls.

WARNHINWEISE!

Verwenden Sie Module nur für ihren Einsatzzweck. Behandeln Sie die Rückwandbeschichtung, den Rahmen und die Frontoberfläche nicht mit Lack oder Klebstoffen, damit das Produkt nicht seine Funktion verliert, beschädigt oder unbenutzbar wird oder andere unvorhersehbare Probleme auftreten.

auspacken und lagern der module

ALLGEMEIN

Die Warnungen und Anweisungen auf der Verpackung sind zu befolgen. Notieren Sie vor der Installation die Seriennummern der Module in der Systemdokumentation. Samsung-Module werden in Kisten geliefert, die besonders dafür ausgelegt sind, beim Transport für ausreichenden Schutz zu sorgen. Es wird angeraten, die Module bis zur Installation nicht aus den Boxen zu nehmen. Wenn die Module vorübergehend gelagert werden müssen, bewahren Sie sie an einem trockenen und gut belüfteten Platz auf.

Behandeln Sie die Module mit Vorsicht

Beachten Sie die folgenden Punkte, wenn Sie die Module auspacken, transportieren oder lagern:

- Tragen Sie rutschsichere Handschuhe und fassen Sie die Module beim Tragen mit zwei oder mehr Personen am Rahmen an.
- Tragen Sie die Module mit beiden Händen und verwenden Sie den Anschlusskasten NICHT als Griff.
- Die Module dürfen sich beim Tragen nicht unter ihrem Eigengewicht verdrehen oder durchbiegen.
- Die Module dürfen keinen Lasten ausgesetzt werden und Sie dürfen nicht darauf treten oder fallen gelassen werden.
- Alle elektrischen Kontakte müssen sauber und trocken gehalten werden.

installation

AUFBAU

- Die Module müssen mit Hilfe von Tragrahmen oder einem Montagesatz speziell für PV-Anwendungen sicher befestigt werden.
- Die Module müssen am Einbauort sicher fixiert werden, damit sie allen erwarteten Belastungen einschließlich Wind- und Schneelasten standhalten können.
- Bringen Sie Module an Stellen an, wo sie nicht durch Hindernisse wie Gebäude und Bäume verschattet werden. Achten Sie besonders darauf, dass der Schatten von Objekten während des Tages nicht auf die Module trifft.
- Achten Sie sorgfältig darauf, dass keine niedrigen Kippwinkel vorhanden sind, damit sich auf dem Glas und an der Rahmenkante kein Schmutz ablagern kann.
- Zwischen der Dachoberfläche und dem Modulrahmen muss ein Abstand bleiben, der ausreichend groß ist, damit auf der Rückseite des Moduls Kühlluft zirkulieren kann. Dadurch kann auch eventuell kondensierende Feuchtigkeit abgeführt werden. Bringen Sie Module so an, dass zwischen dem Dach und dem Modul Luft zirkulieren kann. (Mindestens 100 mm bzw. 4 Zoll)
- Wenn Wasser in den Anschlusskasten eindringt, ist Ihre Sicherheit gefährdet. Damit dies also nicht passieren kann, dürfen die Module nicht so montiert werden, dass das Frontglas nach unten weist (z.B. auf einer Nachführkonstruktion, bei der die Module im Ruhezustand so angeordnet sind, dass der Anschlusskasten nach oben gerichtet ist).
- Größte Sorgfalt ist geboten, damit durch die Erdungsvorrichtungen keine Korrosion verursacht wird.
- Wenn Metalle an Stellen verwendet werden, die der Feuchtigkeit ausgesetzt sind, so dürfen sie nicht allein oder in Metallkombinationen eingesetzt werden, durch die Beschädigungen oder Korrosion entstehen können. Deshalb müssen alle Befestigungselemente (Muttern, Bolzen, Dichtungsringe, Schrauben usw.), wenn nicht abweichen festgelegt, aus rostfreiem Stahl gefertigt sein.
- Beachten Sie die jeweiligen Anforderungen der geltenden regionalen und lokalen Vorschriften zur Erdung von PV-Feldern und zur Montage von Rahmen (z. B. hinsichtlich des Blitzschutzes). In den USA muss der Rahmen entsprechend Artikel 250 NEC geerdet werden.
- Die Länge von selbst schneidenden Schrauben oder Bolzen darf 20 mm nicht übersteigen, damit es nicht zur Berührung der Rückwandbeschichtung des Moduls kommt.
- Empfehlung zum Anzugsmomentbereich der Bolzen: 16 Nm bis 20 Nm.
- Wenden Sie sich bei eventuellen Rückfragen bezüglich der Montage von Profilen an einen offiziellen Vertreter.

ERDUNG

- Bringen Sie mit Hilfe von Beschlägen aus rostfreiem Stahl einen Erdungsleiter für die Ausrüstung an einer der beiden dafür vorgesehenen Erdungsbohrungen (Ø 4) am Modulrahmen an. Wenn für die Ausrüstung ein Erdungsleiter mit einem Durchmesser von mehr als 5,5 mm (#10 AWG) benötigt wird, ist bei Verwendung einer selbst schneidenden Schraube eine Ringklemme erforderlich, um den Erdungsanschluss für den Rahmen durchzuführen. Informationen zu den speziellen Erfordernissen bei der Erdung von PV-Feldern finden Sie in Artikel 690 NEC.
- Die Module dürfen auch mit Hilfe einer Erdungsscheibe eines Drittanbieters oder mit Clipsystemen geerdet werden, sofern sie gemäß den örtlichen Bestimmungen über passivierte Aluminiumrahmen getestet und zertifiziert worden sind und entsprechend den Anweisungen des Herstellers installiert werden.
- Wenn das obige Erdungsverfahren eingesetzt wird, entscheiden Sie sich für eine der beiden Erdungsbohrungen (Abbildung 2) und verwenden Sie die angegebenen Erdungsbeschläge zusammen mit den geeigneten Werkzeugen (z. B. Schraubenschlüssel, Clips u.a.), um die Kabel gemäß den Anforderungen der obigen Beschläge zu erden.

MONTAGE

- Befolgen Sie zusätzlich zu diesen Anweisungen auch immer die Installationsanleitung des Lieferanten Ihrer Montagevorrichtungen. Wenn die Anweisungen des Lieferanten strenger als die von Samsung sind, gelten die Anweisungen des Lieferanten.

1 - Druckklammern oder Clips:

Montieren Sie das Modul mit den Clips seitlich am Modulrahmen. Die seitlichen Rahmen sind an den Längsseiten des Moduls angebracht. Die Mittellinie der Clips befindet sich etwa 152,4 bis 381 mm vom Ende des seitlichen Rahmens entfernt. Der Installateur muss sicherstellen, dass die Klammern ausreichende Festigkeit besitzen, um den konstruktiven Maximaldruck des Moduls aufzunehmen.

Die Metallklammer muss die folgenden Anforderungen erfüllen:

Größe	Dicke	Material
Nicht weniger als 38 mm breit	Nicht weniger als 3 mm dick	Aluminiumlegierung

2 - Rahmenbohrungen:

Befestigen Sie das Modul mit Hilfe der werkseitig angebrachten Montagebohrungen an der Unterkonstruktion (Abbildung 3). Pro Modul werden vier ¼-Zoll-Bolzen aus rostfreiem Stahl, mit Unterlegscheiben und Sicherungsringen empfohlen.

ELEKTROANSCHLUSS

- Normalerweise werden PV-Module wahrscheinlich unter Bedingungen eingesetzt, bei denen sie mehr Strom und/oder Spannung als bei den Standardtestbedingungen erzeugen. Dementsprechend sollten Sie die auf dem Modul vermerkten ISC- und VOC-Werte mit dem Faktor 1,25 multiplizieren, wenn Sie die Nennspannungen der Komponenten, die Leiterkapazitäten, Sicherungsstärken sowie die Größe der an den PV-Ausgang angeschlossenen Steuereinrichtungen bestimmen.
- Die Module dürfen keinesfalls so konfiguriert werden, dass sie eine Spannung erzeugen, die über der zulässigen Systemspannung liegt.
- Die Sicherheitsbestimmungen und vorschriften für Elektroanlagen des jeweiligen Landes sind strikt zu befolgen.
- PV-Module dürfen unter bestimmten Bedingungen in Reihe oder parallel geschaltet werden, damit die Strom- und Spannungserzeugung wunschgemäß erfolgt. Verwenden Sie bei einem Mischsystem verschiedener Anbieter nur Module des gleichen Typs.
- Wenn die Module in Reihe geschaltet werden sollen, müssen sie für dieselbe Stromstärke ausgelegt sein.
- Wenn die Module parallel geschaltet werden sollen, müssen sie für dieselbe Spannung ausgelegt sein. Die Stringkonfiguration wird entsprechend den Anweisungen des Wechselrichter-Herstellers geplant und ausgeführt.
- Die an einen Wechselrichter angeschlossenen Module müssen so konfiguriert und von der Anzahl her begrenzt werden, dass die Maximalspannungen und Betriebsbereiche des Wechselrichters nicht überschritten werden. Die Stringkonfiguration ist so auszulegen, dass sie den Richtlinien des Wechselrichter-Herstellers entspricht.
- Sperrdioden verhindern einen Stromfluss von der Batterie zum Modul, solange kein Strom erzeugt wird. Es wird empfohlen, die Sperrdioden einzusetzen, wenn kein Laderegler verwendet wird.

BETRIEBSBEDINGUNGEN

Alle Samsung-Module müssen unter den folgenden Einsatzbedingungen betrieben werden:

1. Nur terrestrische Anwendungen! Also kein Einsatz im Weltall oder unter Sonderbedingungen (siehe unten).
2. Die Umgebungstemperatur muss im Bereich von -40° C bis +90° C liegen.
3. The wind pressure load of the installation site should be less than 2400 Pascal.
4. Es können weitere Anforderungen an die Umgebungsbedingungen gestellt werden. Schlagen Sie hierzu in den Garantiebedingungen von Samsung nach.

elektroanschluss

ALLGEMEIN

- Die Elektroinstallation erfolgt unter Beachtung der Sicherheitsbestimmungen für Elektroanlagen des jeweiligen Landes.
- Sämtliche Elektroanschlussarbeiten sind durch qualifizierte, zugelassene Fachbetriebe durchzuführen.
- Die elektrischen Leitungen sind zu schützen, um die Sicherheit von Personen sicherzustellen und Schäden an der Anlage zu verhindern.
- Alle in Reihe angeschlossenen Module sind vom selben Modell (Modellnummer) und/oder Typ.

MODULANSCHLUSS

- Überprüfen Sie örtlichen Temperaturen und befolgen Sie die Vorschriften der örtlichen Vorschriften und Bestimmungen für Elektroinstallationen (z. B. NEC 690.7 für die USA, DIN VDE 0100 Teil 712 für Deutschland), um die Einhaltung der Höchstspannungsgrenzen sicherzustellen.
- Die Module sind wegen ihrer Betriebsspannung nicht für Inselbetrieb oder für Batterieladesysteme ausgelegt. Deshalb wird davon abgeraten, sie zum Laden von Batterien zu verwenden.
- Diese Module verfügen über werksseitig eingebaute Bypassdioden. Wenn diese Module falsch an einander angeschlossen werden, können die Bypassdioden, das Kabel oder der Anschlusskasten beschädigt werden.

FELDANSCHLUSS

- Der Begriff „Feld“ bezeichnet eine Gruppe mehrerer miteinander auf einer Tragkonstruktion verbundener Module mit zugehörigen elektrischen Leitungen.
- Samsung empfiehlt alle Leitungen mit doppelter Isolierung zu versehen, die eine Mindesttemperaturfestigkeit von 90° C aufweist. Alle elektrischen Leitungen sind mit flexiblen Kupferkabeln auszuführen. Deren Mindestquerschnitt wird entsprechend den geltenden Gesetzen bestimmt.
- PV-Module dürfen in Reihe geschaltet werden, um die gewünschte Ausgangsspannung zu erzielen. Achten Sie darauf, dass dadurch die maximale Systemspannung nicht überschritten wird.
- PV-Module dürfen parallel geschaltet werden, um den gewünschten Ausgangsstrom zu erzielen. Beachten Sie die jeweiligen Anforderungen der geltenden regionalen und lokalen Vorschriften hinsichtlich der Anforderungen an zusätzliche Sicherungen sowie die Höchstzahl parallel geschalteter PV-Module.

MODULTERMINIERUNG

- Der Anschlusskasten für die elektrischen Anschlüsse ist als Gehäuse für die Modulterminierung ausgelegt.

ANSCHLUSSKASTEN UND KLEMMEN

- Die Anschlusskästen der Module befinden sich auf deren Rückseite.
- Jedes Modul ist mit einem Anschlusskasten ausgerüstet, in dem sich die Klemmen für den positiven und den negativen Pol befinden.
- Um fehlerfreien Betrieb der Module zu gewährleisten, ist beim Anschluss auf richtige Polung zu achten. Zu diesem Zweck sind die Symbole für die Polung in das Gehäuse des Anschlusskastens eingeprägt.

DIODEN

- Wenn Schatten auf eine Zelle fällt, kann es dazu kommen, dass sich die Spannung umkehrt. In diesem Fall verbraucht diese Zelle den von anderen Zellen der Reihenschaltung erzeugten Strom und bewirkt eine unerwünschte Erwärmung der Zelle im Schatten.
- Ein Hotspot-Effekt tritt auf, wenn eine Solarzelle in einem Modul weniger Strom erzeugt als der Modulstring oder der PV-Generator.
- Dazu kommt es, wenn eine Zelle ganz oder teilweise verschattet oder beschädigt ist, oder wenn Zellen elektrisch nicht zueinander passen. Die Zellen im Schatten kehrt ihren Stromfluss um und gibt Energie in Form von Wärme ab. Durch den Einsatz von Schutz- bzw. Bypassdioden wird das Risiko der Aufheizung von Zellen im Schatten reduziert, da der Stromfluss in diesen Zellen begrenzt und dadurch das Brechen verhindert wird.
- Alle Module verfügen über werksseitig eingebaute Bypassdioden. Diese Dioden gewährleisten bei Systemen bis zur angegebenen Systemspannung den Schutz der Schaltungen, so dass Sie keine zusätzlichen Bypassdioden benötigen.
- Wenden Sie sich an Ihren offiziellen Vertreter von Samsung, um den korrekten Diodentyp zu erfragen, falls Sie Dioden aufgrund der Systemspezifikationen doch einmal hinzufügen oder tauschen müssen.

DEUTSCH

wartung

Wenn Sie eine Inspektion der elektrischen oder mechanischen Einrichtungen bzw. eine Wartung benötigen, sollten Sie einen zugelassenen und dazu berechtigten Fachbetrieb mit den Arbeiten beauftragen, um die Gefahr eines elektrischen Schlags oder der Verletzung zu verhindern.

EINE WARTUNG UMFASST DIE FOLGENDEN ARBEITEN:

- Regelmäßige Reinigung des Moduls
- Sichtprüfung auf mögliche interne Verschlechterung der Wasserabdichtung des Moduls
- Überprüfung des Zustands der elektrischen Verbindungen und Schaltungen
- Und schließlich Kontrolle der elektrischen Eigenschaften des Moduls

REGELMÄSSIGE REINIGUNG DES MODULS

- Schmutz auf den Moduloberflächen verursacht Zellabtönung und kann zu geringerer Ausgangsleistung führen.
- Es wird empfohlen, die Moduloberfläche mindestens zweimal pro Jahr mit Wasser und einem weichen Tuch oder Schwamm zu reinigen.
- Unter keinen Umständen darf trockener Schmutz von den Modulen abgeschabt oder abgerieben werden, da dies Mikrokratzer auf der Moduloberfläche verursachen und die Transparenz des Modulglases reduzieren kann. Stattdessen kann für hartnäckigen Schmutz ein sanftes, scheuermittelfreies Reinigungsmittel verwendet werden.

SICHTPRÜFUNG DES MODULS

- Möglicher Glasbruch
- Alle Befestigungen fest, dicht und frei von Korrosion.
- Alle elektrischen Verbindungen fest, dicht, sauber und frei von Korrosion.
- Alle Kabel mechanisch unbeschädigt.
- Alle Verbindungspunkte zur Erdung sind fest, dicht und von Korrosion frei, um die Stromverbindung zwischen den Modulen und der Erde sicherzustellen.

KONTROLLE DER ANSCHLÜSSE UND SCHALTUNGEN

- Die elektrischen und mechanischen Verbindungen sollten alle 6 Monate vorbeugend kontrolliert werden.
- Sitz und Zustand der Terminierungen für die Verbindungskabel des Moduls überprüfen.
- Wasserdichtigkeit des Anschlusskastens überprüfen.

hinweise zur entsorgung

Bei der Entsorgung dieses Geräts sind alle relevanten Gesetze und Bestimmungen des jeweiligen Landes, Bundeslands oder Kreises zu beachten. Die Entsorgung dieses Geräts liegt in der alleinigen Verantwortung des Kunden.

Wenden Sie sich an Ihren örtlichen Samsung-Vertreter, um Informationen zur ordnungsgemäßen Entsorgung des Geräts zu erhalten.

Die Rückgabe von Modulen an Samsung ist nur möglich, wenn Samsung dem vorher schriftlich zugestimmt hat.

informazioni generali sulla sicurezza

Prima di installare il prodotto, tutte le istruzioni di sicurezza fornite in questo documento devono essere lette e comprese.

Prima di installare i moduli, contattare le autorità competenti per ottenere i necessari permessi e determinare i requisiti di installazione e ispezione da osservare. Fare riferimento alle normative e ai regolamenti in vigore nella località di installazione.

PERICOLO!

I cavi di collegamento del modulo sono attraversati direttamente da corrente continua (CC) e, quando il modulo è sotto carico ed esposto alla luce, sono sotto tensione.
La corrente diretta può generare archi elettrici con conseguente rischio di infortuni anche letali in caso di collegamento o scollegamento errato, oppure in caso di contatto con moduli usurati o danneggiati. Non collegare o scollegare i moduli in presenza di corrente generata dai moduli stessi o da una fonte esterna.
L'installazione deve essere effettuata solo da personale autorizzato.

L'installazione di un sistema FV richiede competenze specifiche, soprattutto l'installazione e il cablaggio dei moduli FV. Il lavoro deve essere svolto esclusivamente da personale qualificato e autorizzato.

PER EVITARE IL RISCHIO DI SCINTILLE, SCOSSE ELETTRICHE, INCENDI, USTIONI, DANNI E INFORTUNI

- Tenere bambini e animali lontani dal luogo di installazione durante lo svolgimento dei lavori.
- Evitare scariche elettriche durante l'installazione, il cablaggio, l'avviamento o la manutenzione del modulo.
- Quando il modulo è esposto alla luce solare, o ad altre fonti di luce, genera elettricità. Coprire completamente le superfici del modulo con materiale opaco prima di collegare o scollegare un cavo elettrico.
- Non installare o manipolare i moduli o gli utensili con le mani bagnate o in condizioni di vento forte.
- Non installare i moduli in presenza di gas o vapori infiammabili poiché i moduli possono generare scintille.
- Rimuovere tutta la bigiotteria in metallo prima di installare il prodotto, in modo da ridurre il rischio di esposizione accidentale a circuiti sotto tensione.
- Indossare abbigliamento adatto, dispositivi di protezione e guanti per evitare il contatto diretto con una tensione di 30 VCC o superiore.
- Utilizzare dispositivi isolanti per ridurre il rischio di scosse elettriche.
- Il modulo non contiene parti riparabili dall'utente. Non tentare di riparare alcuna parte del modulo.
- Non stare in piedi sui moduli, non farli cadere, graffiarli o far cadere oggetti sopra di essi.
- Se il vetro anteriore è rotto oppure il foglio posteriore è strappato, il contatto con le superfici o con i telai del modulo può causare scosse elettriche. Non forare, tagliare, graffiare o danneggiare il vetro o il foglio posteriore di un modulo. Il danneggiamento del foglio posteriore rende nulla la garanzia del modulo e può provocare un incendio. Non utilizzare mai il modulo se il foglio posteriore è danneggiato.
- Scatole di derivazione e/o connettori danneggiati costituiscono un rischio elettrico e possono causare lacerazioni.
- Il rivenditore o gli installatori devono rimuovere il modulo dal campo fotovoltaico e contattare il produttore per istruzioni sullo smaltimento. Non lasciare mai un modulo non adeguatamente fissato o senza supporto.
- Non concentrare artificialmente la luce solare su un modulo.
- Non toccare i morsetti delle scatole di derivazione.
- Non modificare il cablaggio dei diodi di bypass.
- Se si utilizzano delle batterie insieme al modulo, seguire tutte le istruzioni di sicurezza fornite dal costruttore della batteria.
- I moduli devono essere completamente collegati a terra.
- In caso di installazione su un tetto, assicurarsi che i moduli siano fissati per mezzo di dispositivi meccanici. Il tetto deve avere un grado di resistenza al fuoco adatto a questo tipo di applicazione.
- Per eventuali lavori di manutenzione, contattare il fornitore del modulo.

ATTENZIONE!

Utilizzare il modulo per l'uso per il quale è stato concepito.
Non trattare il foglio posteriore, il telaio o le superfici anteriori con vernici o adesivi che potrebbero ridurne l'efficienza, causare danni, guasti o altri problemi non noti.

disimballaggio e stoccaggio dei moduli

INFORMAZIONI GENERALI

Osservare le avvertenze e le istruzioni presenti sull'imballaggio. Registrare il numero di serie del modulo prima di installarlo e includerlo nella documentazione del sistema. I moduli Samsung vengono inviati in scatole di imballaggio appositamente concepite per fornire una adeguata protezione durante il trasporto. Si consiglia di non rimuovere i moduli dalle scatole di imballaggio fino al momento dell'installazione. Se necessario, stoccare temporaneamente i moduli, riporli in un locale asciutto e adeguatamente ventilato.

I moduli devono essere manipolati con attenzione

Durante il disimballaggio, il trasporto o lo stoccaggio dei moduli, osservare le seguenti precauzioni:

- Indossare guanti antiscivolo e trasportare il modulo afferrandolo per il telaio. Il trasporto deve essere effettuato da due o più persone.
- I moduli devono essere trasportati utilizzando entrambe le mani. NON utilizzare la scatola di derivazione come punto di presa.
- Durante il trasporto, fare attenzione a che i moduli non cedano o si pieghino sotto il loro stesso peso.
- Non appoggiare pesi sui moduli e non sottoporli a urti. Non camminare sopra i moduli e non farli cadere.
- Tutti i contatti elettrici devono essere mantenuti puliti e asciutti.

installazione

INSTALLAZIONE MECCANICA

- I moduli devono essere fissati saldamente utilizzando telai di supporto o kit di montaggio concepiti appositamente per le applicazioni FV.
- I moduli devono essere fissati saldamente in modo da resistere a tutti i carichi prevedibili, compreso il vento e le forti nevicate.
- Installare i moduli in una posizione nella quale non siano messi in ombra da ostacoli quali edifici o alberi. Evitare in particolare che i moduli siano messi parzialmente in ombra durante le ore diurne.
- Evitare gli angoli poco inclinati, i quali potrebbero causare l'accumulo di sporcizia sul vetro contro il bordo del telaio.
- La quantità di spazio tra la superficie del tetto e il telaio del modulo deve essere tale da consentire all'aria di raffreddamento di circolare intorno alla parte posteriore del modulo. In questo modo si permette anche l'evaporazione della condensa o dell'umidità. Installare i moduli in modo da consentire la circolazione dell'aria tra il tetto e il modulo (almeno 100 mm di spazio).
- Per evitare l'infiltrazione di acqua nella scatola di derivazione, che potrebbe costituire un rischio per la sicurezza, i moduli devono essere montati in modo che le superfici in vetro non siano rivolte verso il basso (ad esempio su un inseguitore solare che, quando inattivo, orienta i moduli con la scatola di derivazione rivolta verso il cielo).
- Prestare molta attenzione ad evitare la corrosione causata dai dispositivi di messa a terra.
- Nei punti esposti all'umidità, non utilizzare metalli (da soli o in combinazione) che potrebbero deteriorarsi o corrodersi. Tutti i dispositivi di fissaggio (dadi, bulloni, rondelle, viti, ecc.) devono essere in acciaio inossidabile, se non altrimenti specificato.
- Per i requisiti di messa a terra dei campi fotovoltaici e dei relativi telai di montaggio, fare riferimento alle normative e ai regolamenti regionali e locali in vigore nella località di installazione (ad esempio, protezione dai fulmini). Negli Stati Uniti, i campi fotovoltaici devono essere collegati a terra in modo conforme alla norma NEC Articolo 250.
- La lunghezza della vite o del bullone autofilettante deve essere inferiore a 20 mm, per evitare che venga a contatto con il foglio posteriore del modulo.
- Valore di coppia del bullone consigliata: da 16N.m a 20N.m.
- Se è necessario utilizzare profili per il montaggio dei moduli FV, contattare un rappresentate autorizzato per richiedere informazioni.

MESSA A TERRA

- Collegare un conduttore di messa a terra a uno dei due fori di messa a terra contrassegnati dal simbolo Ø4 sul telaio del modulo utilizzando dispositivi di fissaggio in acciaio inossidabile. Se si utilizza una vite autoperforante per il collegamento di messa a terra del telaio, avendo il conduttore di messa a terra dell'apparecchiatura un diametro maggiore di 5,5 mm (#10 AWG), è necessario utilizzare un morsetto di messa a terra. In caso di requisiti speciali, consultare le normativa NEC Articolo 690 sulla messa a terra dei campi FV.
- I moduli possono essere collegati a terra anche per mezzo di sistemi a rondelle o pinze prodotti da terzi, a patto che siano stati collaudati su telai in alluminio e dichiarati conformi **alle normative locali**. I sistemi di messa a terra devono essere sempre installati seguendo le istruzioni del costruttore.
- Se si utilizza il metodo di messa a terra sopra indicato, scegliere uno dei due fori di messa a terra (Figura 2) e fissare i dispositivi di messa a terra nella sequenza sopra indicata per mezzo di utensili appropriati, come ad esempio chiavi, pinze o altro.

MONTAGGIO

- Always follow the mounting equipment vendors' installation instructions in addition to these instructions. In cases where the vendors' instructions are more stringent than those of Samsung, the vendors' instruction shall apply.

1 - Morsetti o pinze a pressione:

Effettuare il montaggio con le pinze sul telaio laterale del modulo. I telai laterali sono fissati ai lati lunghi del modulo. La linea centrale delle pinze deve essere a una distanza compresa tra 6”(152,4 mm) e 15”(381 mm) dall’estremità del lato del telaio. Gli installatori devono verificare che la potenza delle morse sia conforme alle specifiche tecniche del modulo.

Le morse in metallo devono essere conformi alle seguenti specifiche:

Dimensioni	Spessore	Materiale
Non meno di 38 mm di larghezza	Non meno di 3 mm	Lega di alluminio

2 - Fori del telaio:

Fissare il modulo alla struttura utilizzando i fori di montaggio predefiniti (Figura 3). Per ogni modulo si consiglia di utilizzare quattro bulloni in acciaio inossidabile da 1/4” con dadi, rondelle e rondelle di sicurezza.

INSTALLAZIONE ELETTRICA

- In condizioni normali, durante l’uso di un modulo fotovoltaico è probabile che si verifichino situazioni nelle quali questo produce più corrente e/o tensione rispetto ai collaudi standard. Di conseguenza, nel determinare la tensione nominale dei componenti, la portata dei conduttori, le dimensioni dei fusibili e le dimensioni dei controlli collegati all’uscita PV (FV), i valori ISC e VOC indicati sul modulo devono essere moltiplicati per un fattore di 1,25.
- I moduli non devono essere configurati in modo da generare una tensione superiore alla tensione massima consentita.
- Seguire scrupolosamente i regolamenti e i codici elettrici nazionali.
- Per ottenere la potenza elettrica desiderata, i moduli FV possono essere collegati in serie o in parallelo, a patto che siano rispettate determinate condizioni. In un circuito combinato, utilizzare solo lo stesso tipo di moduli.
- Se i moduli devono essere collegati in serie, devono avere lo stesso amperaggio.
- Se devono essere collegati in parallelo, devono avere la stessa tensione. La configurazione della stringa deve essere pianificata ed eseguita secondo le istruzioni fornite dal costruttore dell’inverter.
- Il numero di moduli collegati a un inverter deve essere incluso nel campo operativo/limiti di tensione dell’inverter, mentre la struttura di configurazione delle stringhe deve essere conforme alle istruzioni fornite dal costruttore dell’inverter.
- I diodi di blocco impediscono alla corrente di fluire dalla batteria al modulo quando non viene generata elettricità. In mancanza di un regolatore di carica, si consiglia di utilizzare sempre i diodi di blocco.

CONDIZIONI DI FUNZIONAMENTO

Tutti i moduli Samsung devono essere utilizzati nel rispetto delle seguenti condizioni di funzionamento:

1. Solo applicazioni terrestri – nessuno spazio esterno o condizioni speciali (vedere oltre).
2. La temperatura ambiente deve essere compresa tra –40 e +90°C.
3. La pressione del vento sul punto di installazione deve essere inferiore a 2400 Pascal /m².
4. Può rendersi necessario prendere in considerazione anche alcune condizioni di tipo ambientale. Si prega di consultare le esclusioni di garanzia di Samsung.

cablaggio

INFORMAZIONI GENERALI

- Tutti i cablaggi devono essere eseguiti nel rispetto dei codici elettrici vigenti.
- I cablaggi devono essere effettuati da un elettricista qualificato.
- I cablaggi devono essere protetti, in modo da evitare il rischio di infortuni e danneggiamenti.
- Tutti i moduli collegati in serie devono essere dello stesso tipo e/o modello.

CABLAGGIO DEI MODULI

- Verificare le condizioni di temperatura locali e seguire il Codice elettrico nazionale (per es. NEC 690.7 per gli USA, DIN VDE 0100 Teil 712 per la Germania) per garantire la conformità con i limiti di tensione massimi.
- I moduli non sono concepiti per l’uso con sistemi “off-grid” o di ricarica delle batterie a causa della loro tensione operativa. Di conseguenza, si consiglia di non utilizzarli per la ricarica di batterie.
- I moduli contengono diodi di bypass installati in fabbrica. Se i moduli vengono collegati erroneamente l’uno con l’altro, i diodi di bypass, i cavi o la scatola di derivazione potrebbero subire danni.

CABLAGGIO DEL CAMPO FOTOVOLTAICO

- Il termine “campo fotovoltaico” indica l’insieme di più moduli fissati a una struttura di supporto e i relativi cablaggi.
- Si raccomanda di utilizzare cablaggi a doppio isolamento con un valore minimo di 90 °C (194 °F). Tutti i cavi devono essere muniti di conduttori in rame (Cu) flessibili. Le dimensioni minime dipendono dalle normative in vigore nella località di installazione.
- I moduli FV possono essere cablati in serie in modo da generare la quantità di tensione desiderata. Non superare la tensione massima del sistema.
- I moduli FV possono essere cablati in parallelo in modo da generare la quantità di corrente desiderata. Per informazioni sui requisiti dei fusibili e sul numero massimo di moduli FV collegabili in parallelo, consultare le normative locali e regionali in vigore nella località di installazione.

TERMINALI DEI MODULI

- Una scatola di derivazione è una cabina dotata di morsetti per i collegamenti elettrici.

SCATOLA DI DERIVAZIONE E TERMINALI

- Le scatole di derivazione dei moduli sono situate sul retro del moduli.
- Ogni modulo è dotato di una scatola di derivazione che contiene i terminali positivi e negativi, oltre ai diodi di bypass.
- Quando si effettuano i collegamenti, è indispensabile rispettare le polarità utilizzando come riferimento i simboli incisi sul corpo della scatola di derivazione. In caso contrario, i moduli potrebbero non funzionare correttamente.

DIODI

- La messa in ombra di una cella può causare un deficit di tensione. La cella consuma quindi la potenza generata dalle altre celle della serie producendo una riscaldamento indesiderato della cella in ombra.
- L'effetto di surriscaldamento locale si produce quando una cella solare all'interno di un modulo genera meno corrente della stringa del modulo o del generatore FV. Ciò si verifica quando la cella è interamente o parzialmente in ombra, è danneggiata o quando le celle hanno amperaggi diversi. La cella in ombra diventa a bias inverso e dissipa energia in forma di calore.
- L'uso di protezioni o diodi di bypass riduce il rischio di surriscaldamento delle celle in ombra limitando la quantità di corrente che circola al loro interno ed evitando il rischio di rotture.
- Tutti i moduli sono muniti di diodi di bypass installati in fabbrica. Questi diodi forniscono un'adeguata protezione ai sistemi che operano entro i limiti di tensione specificati. Di conseguenza, non è necessario installare altri diodi di bypass.
- Se è necessario aggiungere o sostituire i diodi a causa delle specifiche del sistema, si prega di contattare il rappresentate autorizzato Samsung per richiedere informazioni sul tipo di diodi appropriato.

manutenzione

Qualora fosse necessario eseguire un'ispezione meccanica o lavori di manutenzione, rivolgersi a un professionista qualificato in modo da evitare il rischio di scosse elettriche o infortuni.

LA MANUTENZIONE COPRE LE SEGUENTI ATTIVITÀ:

- Pulizia periodica del modulo.
- Ispezione visiva per verificare l'eventuale usura interna della tenuta stagna del modulo.
- Controllo dei collegamenti e dei cablaggi elettrici.
- Controllo delle caratteristiche elettriche del modulo.

PULIZIA PERIODICA DEL MODULO

- La sporcizia accumulata sulle superfici del modulo può mettere in ombra la cella causando una riduzione della potenza generata.
- Si consiglia di pulire le superfici del modulo con acqua e una spugna o un panno morbido almeno due o più volte all'anno.
- Non strofinare o grattare il modulo quando è asciutto poiché ciò potrebbe causare micro scalfitture sulla superficie riducendo la trasparenza del vetro. Per pulire lo sporco più resistente, utilizzare un detergente delicato non abrasivo.

ISPEZIONE VISIVA DEL MODULO

- Possibili crepe nel vetro.
- Tutti i dispositivi di fissaggio devono essere saldamente fissati, serrati e senza segni di corrosione.
- Tutti i collegamenti elettrici devono essere saldamente fissati, serrati e senza segni di corrosione.
- L'integrità meccanica dei cavi deve essere intatta.
- Tutti i punti di collegamento della messa a terra devono essere saldamente fissati, serrati e senza segni di corrosione, in modo da garantire la continuità tra i moduli e il terreno.

CONTROLLO DEI COLLEGAMENTI E DEI CABLAGGI

- I collegamenti elettrici e meccanici devono essere sottoposti a un'ispezione preventiva ogni 6 mesi.
- Controllare il fissaggio e lo stato dei terminali dei cavi di collegamento dei moduli.
- Controllare la tenuta stagna delle scatole di derivazione.

smaltimento

Questo prodotto deve essere smaltito nel rispetto di tutte le normative e leggi federali, statali e locali. Il cliente ha la responsabilità di assicurare il corretto smaltimento del prodotto.

Per informazioni sul corretto smaltimento del prodotto, contattare il rappresentante locale Samsung.

La restituzione dei moduli è possibile solo previa autorizzazione scritta di Samsung.

informations générales relatives à la sécurité

Toutes les instructions de sécurité de ce document doivent être lues et comprises avant de procéder à l'installation de cet appareil.

L'installation d'un système photovoltaïque requiert des connaissances spécifiques, particulièrement en ce qui concerne l'installation et le câblage des modules photovoltaïques. Cette tâche doit impérativement être effectuée par des personnes qualifiées et agréées.

DANGER!

Les câbles d'interconnexion du module transmettent du courant continu (CC) et sont sous tension lorsque le module est en charge et lorsqu'il est exposé à la lumière.

Des arcs électriques peuvent se former et causer des blessures graves, voire mortelles, si des branchements/ débranchements incorrects sont effectués ou en cas de contact avec des modules endommagés. Ne branchez/ débranchez pas les modules lorsque le courant des modules ou d'une source externe est encore présent.

L'installation doit impérativement être effectuée par du personnel agréé.

Avant l'installation des modules, contactez les autorités concernées pour vous informer sur les autorisations et les exigences d'installation et d'inspection à suivre. Reportez-vous aux réglementations régionales et locales.

POUR ÉVITER LES RISQUES D'ÉTINCELLES OU DE CHOCS ÉLECTRIQUES, D'INCENDIE, DE BRÛLURES, DE DÉGÂTS ET DE BLESSURES

- Les animaux et les enfants ne doivent pas s'approcher de l'installation lorsque des travaux sont effectués.
- Évitez les décharges électriques lors de l'installation, du câblage, du démarrage ou de l'entretien du module.
- Un module génère de l'électricité lorsqu'il est exposé à la lumière du soleil ou à d'autres sources de lumière. Recouvrez entièrement la surface du module à l'aide d'un matériau opaque avant d'effectuer ou de couper des connexions électriques.
- Ne manipulez pas et n'installez pas les modules ou des outils lorsqu'ils sont humides, ou par vent fort.
- Les modules pouvant produire des étincelles, ne les installez pas à proximité de gaz ou de vapeurs inflammables.
- Retirez tout bijou métallique avant d'installer ce produit afin de réduire le risque de contact accidentel avec des circuits sous tension.
- Munissez-vous de vêtements, de protections et de gants adaptés afin d'éviter tout contact direct avec 30 V c.c. voire plus.
- Utilisez des outils isolés pour réduire le risque de choc électrique.
- Aucun élément du module n'est réparable par l'utilisateur. Ne tentez pas de réparer les éléments du module.
- Ne marchez pas sur le module. Ne jetez rien dessus, ne faites pas tomber d'objet sur le module et ne le rayez pas.
- Si le verre recouvrant le module est brisé, ou que le revêtement arrière est arraché, tout contact avec la surface ou le cadre du module peut entraîner un choc électrique. Il ne faut pas percer, couper, rayer ou détériorer le verre ou le revêtement arrière d'un module. Une détérioration du revêtement arrière annule la garantie limitée et peut entraîner un incendie. N'utilisez pas de modules dont le revêtement arrière est endommagé.
- Des boîtes de jonction et/ou des connecteurs abîmés constituent des dangers électriques et des risques de coupures profondes. Le distributeur ou les installateurs doivent retirer le module du générateur et contacter le fournisseur pour obtenir des instructions de mise au rebut du matériel.
- Assurez-vous que les modules sont toujours fixés et maintenus en place.
- N'utilisez aucun dispositif permettant de concentrer la lumière solaire sur un module.
- Ne touchez pas aux bornes de la boîte de jonction.
- Ne modifiez pas le câblage des diodes de dérivation.
- Si des batteries sont utilisées avec le module, suivez toutes les recommandations de sécurité fournies par le fabricant de la batterie.
- Raccordez à la terre tous les modules.
- Si le module est installé sur un toit, assurez-vous qu'il est maintenu par des fixations mécaniques. Pour pouvoir procéder à l'installation, le toit doit avoir un niveau de résistance au feu adéquat.
- Contactez le fournisseur de votre module le cas échéant.

ATTENTION!

N'utilisez le module que dans le cadre de l'usage prévu. N'appliquez pas de peinture ou d'adhésif sur le revêtement arrière, le cadre ou la surface avant. Cela pourrait réduire l'efficacité du module, l'endommager, le rendre inutilisable et entraîner d'autres problèmes.

désemballage et entreposage des modules

GÉNÉRALITÉS

Les avertissements et les instructions placés sur l'emballage doivent être suivis. Les numéros de série des modules doivent être relevés et notés dans la documentation du système avant d'effectuer l'installation. Les modules Samsung sont expédiés dans des boîtes spécialement conçues pour les protéger efficacement durant le transport. Il est conseillé de ne pas retirer les modules de leur emballage avant l'installation. Si vous devez entreposer les modules temporairement, placez-les dans un endroit sec et bien ventilé.

Les modules doivent être manipulés avec soin

Les instructions suivantes concernant le désemballage, le transport et l'entreposage des modules doivent être respectées :

- Les modules doivent être transportés par au moins deux personnes, munies de gants antidérapants.
- Les modules doivent être portés à deux mains et la boîte de jonction ne doit PAS être utilisée comme prise.
- Les modules ne doivent pas se tordre ou se déformer sous leur propre poids lorsqu'ils sont transportés.
- Les modules ne doivent pas subir de tension ou de pression. Ne marchez pas sur les modules et ne les faites pas tomber.
- Tous les contacts électriques doivent être propres et protégés de l'humidité.

installation

INSTALLATION MÉCANIQUE

- Les modules doivent être solidement fixés à l'aide de cadres de support ou de kits de fixation destinés aux modules photovoltaïques.
- Les modules doivent être fixés solidement et de manière à éviter toute pression, y compris le vent et la neige.
- Installez les modules dans un emplacement non ombragé (évitez les ombres d'arbres ou de bâtiments par exemple). Assurez-vous qu'aucun obstacle ne masque la lumière durant la journée.
- Si l'angle d'inclinaison est trop faible, une accumulation de saleté peut apparaître sur les bords de la plaque de verre. Veillez donc à ce que l'angle soit adéquat.
- La surface du toit et le cadre du module doivent être séparés d'un espace permettant à l'air de circuler autour du module pour le refroidir. Cet espacement permet aussi d'empêcher la présence de condensation ou de moisissure. Installez les modules de façon à ce que l'air puisse circuler entre le toit et le module (espace de 100 mm, soit 4 pouces au minimum).
- Pour protéger la boîte de jonction de l'humidité (la présence d'eau pourrait présenter un risque), les modules ne doivent pas être orientés vers le bas (par exemple sur un suiveur de trajectoire orientant la boîte de jonction vers le ciel en mode veille).
- Vous devez vous assurer scrupuleusement que les dispositifs de mise à la terre n'entraînent pas de corrosion.
- Les métaux utilisés à des emplacements exposés à la moisissure ne doivent pas être employés dans des conditions pouvant entraîner leur détérioration ou leur corrosion. Toutes les fixations (écrous, boulons, rondelles, vis, etc.) doivent donc être en acier inoxydable, sauf instruction contraire.
- Reportez-vous aux instructions locales et régionales concernant la mise à la terre de générateurs photovoltaïques et des supports de montage pour connaître les exigences spécifiques. (par exemple, au niveau de la protection contre la foudre). Aux États-Unis, le cadre du générateur doit être mis à la terre en conformité avec l'article 250 du NEC (National Electrical Code).
- La longueur des vis autotaraudeuses ou des boulons ne doit pas dépasser 0,78 pouces (20 mm) pour éviter que ces éléments ne rentrent en contact avec le revêtement arrière du module.
- Plage de couple conseillée pour les boulons : de 16 Nm à 20 Nm.
- Contactez un représentant agréé si vous avez des questions concernant les profils de fixation des modules.

MISE À LA TERRE

- Fixez un conducteur de mise à la terre, avec des éléments de fixation en acier inoxydable, à l'un des deux orifices de mise à la terre Ø4 du cadre du module. Si vous avez besoin d'un conducteur de mise à la terre d'un diamètre supérieur à 5,5 mm (#10 AWG) et si vous utilisez des vis autoperceuses, l'installation d'un crochet de fixation de mise à la terre est nécessaire pour relier le cadre à la terre. Reportez-vous à l'article 690 du NEC sur les générateurs photovoltaïques pour connaître les exigences particulières.
- Les modules peuvent être mis à la terre grâce à des rondelles ou des étriers provenant de tiers, à condition que ces éléments aient été testés sur un cadre en aluminium anodisé, soient conformes **aux réglementations locales** et soient installés selon les instructions du fabricant.
- Si vous utilisez la méthode de mise à la terre ci-dessus, veuillez utiliser l'un des deux orifices de mise à la terre (Figure 2) et le matériel de mise à la terre avec les outils appropriés (clé, étriers ou autres), afin de mettre à la terre les câbles selon la séquence ci-dessus.

FIXATION

- En plus de ces instructions, veillez à suivre les instructions d'installation du dispositif de fixation. Si les instructions fournies par le fournisseur du dispositif de fixation sont plus restrictives que les instructions de Samsung, suivez-les.

1 - Colliers de serrage ou étriers :

Fixez le module avec les étriers sur le cadre latéral du module. Les cadres latéraux sont fixés aux côtés plus longs du module. L'axe des étriers doit être situé entre 6 pouces (152,4 mm) et 15 pouces (381 mm) de l'extrémité du cadre latéral. Les installateurs doivent s'assurer que les colliers de serrage sont suffisamment résistants pour supporter la pression de service maximale du module.

Le collier de serrage doit satisfaire les conditions suivantes :

Taille	Épaisseur	Matériau
largeur d'au moins 1,5 pouce (38 mm)	au moins 0,12 pouce (3 mm)	alliage d'aluminium

2 - Orifices du cadre :

Fixez le module sur la structure en utilisant les orifices de fixation présents sur le cadre du module (Figure 3). Il est conseillé d'utiliser quatre boulons 1/4 pouces en acier inoxydable, ainsi que des écrous et des rondelles freins sur chaque module.

INSTALLATION ÉLECTRIQUE

- Dans des conditions d'utilisation normales, il est probable qu'un module photovoltaïque produise plus de courant et/ou de tension qu'indiqué dans les conditions de test standardisées. En conséquence, les valeurs ISC et VOC indiquées doivent être multipliées par 1,25 lors du choix des valeurs de tension des composants, du courant admissible des conducteurs, de la taille des fusibles ainsi que celle des dispositifs de contrôle de sortie du module photovoltaïque.
- Les modules doivent être réglés de façon à ne pas générer une tension supérieure à la tension du système autorisée.
- Les réglementations nationales concernant les installations électriques doivent être respectées scrupuleusement.
- Les modules photovoltaïques doivent être branchés en série ou en parallèle pour fournir la quantité d'électricité souhaitée, tant que les conditions nécessaires sont remplies. Utilisez le même type de modules dans un circuit combinant plusieurs sources.
- Si les modules sont branchés en série, ils doivent avoir le même ampérage.
- S'ils sont branchés en parallèle, ils doivent disposer de la même tension. La configuration des strings doit être planifiée et effectuée en accord avec les instructions du fabricant de l'onduleur.
- Le nombre de modules branchés à l'onduleur doit respecter les limites de tension et la plage de fonctionnement de l'onduleur, et les instructions du fabricant de l'onduleur doivent être observées pour élaborer et installer les strings.
- Les diodes de blocage empêchent la circulation du courant entre la batterie et le module lorsqu'aucune électricité n'est générée. Si aucun régulateur de charge n'est utilisé, il est conseillé d'utiliser des diodes de blocage.

CONDITIONS DE FONCTIONNEMENT

Tous les modules Samsung doivent être utilisés dans le respect des conditions de fonctionnement suivantes :

1. Utilisation terrestre seulement : pas d'utilisation extra-atmosphérique ou dans des conditions particulières (voir ci-dessous)
2. La température ambiante doit être comprise entre -40 °C (-40 °F) et +90 °C (194 °F).
3. La pression du vent sur le site de l'installation doit être inférieure à 2 400 pascal/m².
4. D'autres conditions ambiantes peuvent s'appliquer. Reportez-vous aux exclusions de garantie Samsung.

câblage

GÉNÉRALITÉS

- Tout câblage doit être effectué conformément aux réglementations électriques en vigueur.
- Le câblage doit être effectué par un professionnel qualifié titulaire d'une autorisation.
- Les câbles doivent être protégés, pour garantir la sécurité et empêcher tout dégât.
- Tous les modules branchés en série doivent être du même modèle et/ou du même type.

CÂBLAGE DU MODULE

- Vérifiez les conditions locales de température et suivez le NEC (National Electric Code) (NEC 690.7 pour les Etats-Unis, DIN VDE 0100 Teil 712 pour l'Allemagne) pour vous assurer que l'installation est conforme aux limites de tension maximale.
- Les modules ne sont pas conçus pour être utilisés en « autoproduction » ou avec des systèmes de charge de batteries, en raison de leur tension de fonctionnement. Il est donc déconseillé de les utiliser pour charger des batteries.
- Ces modules contiennent des diodes de dérivation installées en usine. Si les branchements reliant les modules sont incorrects, les diodes de dérivation, les câbles, ou la boîte de jonction peuvent être endommagés.

CÂBLAGE DU GÉNÉRATEUR

- Le terme « générateur » est utilisé pour décrire un ensemble de modules installés sur une structure, ainsi que l'ensemble du câblage.
- Samsung recommande d'installer une double isolation résistante à 90 °C (194 °F). Tous les conducteurs constituant le câblage doivent être en cuivre flexible (Cu). La taille minimale doit être déterminée selon les réglementations en vigueur.
- Les modules photovoltaïques peuvent être câblés en série pour produire la tension de sortie désirée. Veillez à ne pas dépasser la tension maximale du système.
- Les modules photovoltaïques peuvent être câblés en parallèle pour produire le courant de sortie désiré. Reportez-vous aux réglementations régionales et locales en vigueur pour connaître les exigences supplémentaires en ce qui concerne les fusibles et les limitations du nombre maximal de modules photovoltaïques en parallèle.

EXTRÉMITÉS DU MODULE

- Pour effectuer vos branchements électriques, utilisez la boîte de jonction servant de coffret pour les bornes.

BOÎTE DE JONCTION ET BORNES

- Les boîtes de jonction sont situées à l'arrière des modules.
- Chaque module est équipé d'une boîte de jonction contenant les bornes (positives et négatives) et les diodes de dérivation.
- Lors des branchements, la polarité (dont les symboles sont indiqués sur la boîte de jonction) doit être respectée, pour assurer un fonctionnement correct des modules.

DIODES

- Si une cellule ne reçoit plus de lumière, il est possible que sa tension augmente. En effet, la cellule va consommer l'énergie produite par les autres cellules branchées en série et ainsi anormalement augmenter en température.
- Un phénomène appelé « effet hot spot » se produit lorsqu'une cellule solaire d'un module génère moins de courant que le courant de faisceau du module ou du générateur photovoltaïque. Cela se produit lorque la cellule est masquée ou endommagée, en tout ou partie, ou lorsque des cellules n'ont pas de correspondance électrique. La cellule masquée change de polarité et dissipe l'énergie sous forme de chaleur.
- L'utilisation de diodes de protection ou de diodes de dérivation réduit le risque d'échauffement des cellules ne recevant pas de lumière. Elles limitent la quantité de courant passant dans ces cellules pour éviter la panne.
- Tous les modules sont équipés de diodes de dérivation installées en usine. Ces diodes protègent le circuit et sont adaptées à la tension des systèmes, de façon à ce que vous n'ayez pas à utiliser de diodes de dérivation supplémentaires.
- Contactez votre représentant agréé Samsung pour connaître le type de diode approprié s'il est nécessaire d'ajouter ou de remplacer des diodes selon les spécifications du système.

entretien

Si votre système requiert une inspection ou un entretien (mécanique ou électrique), il est recommandé de faire appel à un professionnel titulaire d'une autorisation pour effectuer ces opérations, ceci afin d'éviter tout choc électrique ou blessure.

L'ENTRETIEN CONCERNE LES PROCESSUS SUIVANTS :

- Nettoyage régulier du module
- Inspection visuelle en quête d'éventuelles détériorations internes affectant l'étanchéité du module
- Contrôle de l'état des branchements électriques et du câblage
- Contrôle des caractéristiques électriques du module

NETTOYAGE RÉGULIER DU MODULE

- La saleté présente sur les surfaces du module masque la lumière et peut réduire la quantité d'énergie produite.
- Il est conseillé de nettoyer la surface du module à l'aide d'eau et d'une éponge ou d'un chiffon doux au moins deux fois par an.
- En aucun cas vous ne devez tenter de retirer la saleté des modules lorsque ces derniers sont secs. En effet, tout frottement peut entraîner la présence de micro-rayures sur la surface des modules et ainsi réduire la transparence du verre. Utilisez un détergent non abrasif pour retirer la saleté restante.

INSPECTION VISUELLE DU MODULE

- Éventuelles fissures du verre
- Fixations solides et absence de corrosion
- Branchements électriques fixés solidement, propres et sans corrosion
- Bonne intégrité mécanique des câbles
- Liaisons à la terre fixées solidement, sans corrosion afin d'assurer une bonne continuité entre les modules et la terre

CONTRÔLE DES RACCORDEMENTS ET DU CÂBLAGE

- Les connexions électriques et mécaniques sont soumises à une inspection préventive tous les 6 mois.
- Vérification des fixations et de l'état des bornes des câbles de raccordement du module
- Vérification de l'étanchéité de la boîte à bornes

mise au rebut

La mise au rebut de ce produit doit respecter les réglementations et les lois locales, de l'État et fédérales en vigueur. Le client est responsable de la mise au rebut de ce produit et doit s'assurer que cette dernière est effectuée convenablement.

Veuillez contacter votre représentant Samsung pour obtenir des informations concernant la mise au rebut correcte de ce produit.

Samsung n'accepte aucun renvoi de modules, à l'exception des renvois autorisés au préalable par Samsung.

información general de seguridad

Antes de instalar este dispositivo lea con atención todas las instrucciones de seguridad de este documento.

La instalación de un sistema fotovoltaico exige conocimientos especializados, en particular para la instalación y el cableado de los módulos. Este trabajo lo debe realizar personal adecuadamente cualificado y autorizado.

PELIGRO

Por los cables de interconexión del módulo pasa una corriente continua (CC) y hay fuentes de voltaje cuando el módulo está en carga y cuando está expuesto a la luz. **La corriente continua puede formar arcos en las separaciones y puede causar lesiones o la muerte si se realiza una conexión o desconexión incorrecta o si se hace contacto con conductores de los módulos que estén deshilachados o rasgados.** No conecte ni desconecte los módulos si hay corriente que provenga de los módulos o de una fuente externa.
La instalación sólo la debe realizar personal autorizado.

Antes de instalar los módulos, debe ponerse en contacto con los organismos adecuados para determinar los permisos y los requisitos de instalación e inspección que se han de seguir. Consulte la normativa local y regional aplicable.

PARA EVITAR EL RIESGO DE CHISPAS O DESCARGAS ELÉCTRICAS, INCENDIO, QUEMADURAS, DAÑOS O LESIONES

- Mientras trabaje en la instalación mantenga alejados a los niños y animales.
- Evite las descargas eléctricas durante la instalación, el cableado y la puesta en marcha de los módulos o cuando realice tareas de mantenimiento.
- Un módulo genera electricidad cuando está expuesto a la luz solar o a otras fuentes de iluminación. Cubra completamente la superficie del módulo con un material opaco antes de realizar o interrumpir las conexiones eléctricas.
- No instale ni manipule los módulos ni las herramientas si están húmedos o durante periodos de vientos fuertes.
- No instale el módulo donde haya vapores o gases inflamables ya que se pueden originar chispas.
- Despójese de cualquier artículo metálico antes de instalar el producto para reducir el riesgo de accidentes derivados de los circuitos activos.
- Póngase ropa, protecciones y guantes adecuados para evitar que pueda entrar en contacto directo con 30 VDC o más.
- Utilice herramientas aisladas eléctricamente para reducir el riesgo de descargas eléctricas.
- En el módulo no hay piezas que el usuario pueda reparar. No intente reparar ninguna pieza del módulo.
- No se suba sobre los módulos, no los deje caer, los raye o permita que ningún objeto caiga sobre ellos.
- Si se rompe el vidrio frontal o se desprende la lámina posterior, cualquier contacto con la superficie o el armazón del módulo puede originar una descarga eléctrica. No perfore, corte, raye ni dañe el vidrio ni la lámina posterior de un módulo. Un daño en la lámina posterior anulará la garantía limitada del módulo y puede originar un incendio. Nunca utilice módulos cuya lámina posterior esté dañada.
- Las cajas de conexiones y los conectores rotos representan un riesgo eléctrico y pueden causar heridas cortantes, por lo que el usuario debe contactar con su proveedor o instalador para que retiren el módulo de su bastidor y se pongan en contacto con su distribuidor, para proceder a su eliminación.
- Nunca deje un módulo sin apoyos y sin asegurar.
- No concentre artificialmente la luz solar sobre un módulo.
- No toque los terminales de la caja de conexiones.
- No cambie el cableado de los diodos de derivación.
- Si en un módulo se utilizan baterías, siga las recomendaciones de seguridad del fabricante de las baterías.
- Todos los módulos han de estar conectados a tierra.
- Si el módulo se instala en el tejado, asegúrese de que esté asegurado con fijaciones mecánicas. El tejado debe tener un nivel de resistencia al fuego adecuado para la aplicación.
- Si es necesario realizar tareas de mantenimiento, póngase en contacto con el proveedor del módulo.

PRECAUCIONES

Utilice el módulo sólo para el propósito previsto.
No trate la lámina posterior, el armazón ni la superficie frontal con pinturas o adhesivos a fin de evitar la reducción de sus prestaciones, que aparezcan daños u otros problemas desconocidos y hacerlos impracticables.

desembalaje y almacenamiento de los módulos

GENERAL

Se deben observar las advertencias e instrucciones que figuran en el embalaje. Antes de la instalación se deben anotar los números de serie del módulo y se deben guardar con la documentación del sistema. Los módulos de Samsung se envían en cajas diseñadas especialmente que proporcionan la protección adecuada durante el transporte. Es aconsejable no sacar los módulos de las cajas hasta el momento de la instalación. Si es necesario almacenar los módulos temporalmente, debe hacerse en un espacio sin humedad y debidamente ventilado.

Los módulos se deben manipular con cuidado

Al desembalar, transportar o almacenar los módulos se han de observar los siguientes puntos:

- Se han de llevar guantes antideslizantes y transportar el módulo entre dos o más personas sujetándolo por el armazón.
- Los módulos se han de transportar sujetándolos con ambas manos; la caja de conexiones NO se debe utilizar como asa.
- No se ha de permitir que los módulos se comben o se arqueen por su propio peso durante el transporte.
- Los módulos no deben someterse a cargas ni tensiones; no deben pisarse ni dejarse caer.
- Todos los contactos eléctricos han de mantenerse limpios y secos.

instalación

INSTALACIÓN MECÁNICA

- Los módulos se han de asegurar con bastidores de apoyo o kits de montaje especiales para aparatos fotovoltaicos.
- Los módulos se deben fijar firmemente en su lugar de manera que puedan soportar todas las cargas previstas, incluidas las originadas por el viento y la nieve.
- No instale los módulos donde haya obstáculos como edificios o árboles que les hagan sombra. Preste una atención especial para evitar que los módulos queden a la sombra durante el día.
- Debe evitar los ángulos de inclinación bajos que provocan que la suciedad se incruste en el borde del armazón del vidrio.
- La distancia entre la superficie del tejado y el armazón del módulo debe permitir que circule aire de refrigeración por la parte posterior del módulo. Esto permitirá también que se disipe la condensación y la humedad. Instale el módulo de modo que el aire pueda circular entre el tejado y el módulo. (mantenga una distancia de separación mínima de 11 cm)
- Para impedir que penetre agua en la caja de conexiones, lo que representaría un riesgo para la seguridad, no se deben instalar los módulos con el vidrio frontal cara abajo (por ejemplo, en una estructura de rastreo solar que coloque los módulos con la caja de conexiones mirando hacia el cielo durante el modo de reposo).
- Se ha de tener un especial cuidado para asegurar que no se produzca corrosión derivada de la base de la instalación.
- Los materiales metálicos utilizados en lugares expuestos a la humedad no se han de utilizar solos o conjuntamente con otros que puedan dar lugar a su degradación o corrosión. Así pues, todas las fijaciones (tuercas, pernos, arandelas, tornillos, etc.) deben ser de acero inoxidable a menos que se especifique lo contrario.
- Consulte la normativa local y regional relativa a los bastidores fotovoltaicos sobre la conexión a tierra y de montaje para conocer los requisitos específicos. (por ejemplo, la protección contra los rayos). En EE.UU. el armazón del bastidor debe estar conectado a tierra según el Artículo 250 de la norma NEC.
- La longitud del tornillo autorroscante o del perno no debe ser superior a 0,78” (20 mm) para evitar el contacto con la lámina posterior del módulo.
- Recomendaciones para el rango de torsión del perno: 16 N.m hasta 20 N.m.
- Póngase en contacto con el organismo autorizado para las cuestiones relativas a los perfiles de montaje de los módulos, si es necesario.

CONEXIÓN A TIERRA

- Monte un conductor de conexión a tierra del equipo con componentes de acero inoxidable en uno de los dos orificios de conexión a tierra indicados como Ø4 en el armazón del módulo. Si se necesita un conductor de conexión a tierra del equipo de un diámetro superior a 5,5 mm (AWG n.º 10), será necesario un terminal de inserción de conexión a tierra, cuando se utilice un tornillo de autoperforación para realizar la conexión a tierra del armazón. Consulte el Artículo 690 de la norma NEC y la normativa local y regional, para conocer los requisitos específicos para las matrices fotovoltaicas de conexión a tierra.
- Los módulos se pueden conectar a tierra mediante una arandela de conexión a tierra o unos sistemas de fijación de terceros, siempre que hayan sido probados y certificados por las reglamentaciones locales en un bastidor de aluminio anodizado y que se instalen de acuerdo con las instrucciones del fabricante.
- Si se ha adoptado el método de conexión a tierra anterior, elija uno de los dos orificios de conexión a tierra (figura 2) y utilice los componentes de conexión a tierra con las herramientas apropiadas, como una llave inglesa, grapas u otras para conectar a tierra los cables de acuerdo con la secuencia de componentes anterior.

MONTAJE

- Siga siempre las instrucciones de instalación de los distribuidores del equipo de montaje además de las instrucciones presentes. Siga las instrucciones del distribuidor si son más estrictas que las de Samsung.

1 - Abrazaderas o grapas de presión:

Monte el módulo con las grapas en el armazón lateral del módulo. Los armazones laterales se fijan en los lados más largos del módulo. La línea central de la grapa debe estar entre 6” (152 mm) y 15” (381 mm) apartada del extremo del armazón lateral. Los instaladores deben asegurar que las grapas sean lo bastante fuertes para permitir la presión de diseño máxima del módulo.

La abrazadera metálica debe cumplir las siguientes especificaciones:

Tamaño	Grosor	Material
No menos de 1,5” (38 mm) de ancho	No menos de 0,12” (3 mm)	Aleación de aluminio

2 - Orificios del armazón:

Asegure el módulo a la estructura mediante los orificios de montaje de fábrica (figura 3). Se recomiendan cuatro tornillos de acero inoxidable de 1/4”, con arandelas de tuercas y de bloqueo, por módulo

INSTALACIÓN ELÉCTRICA

- En condiciones normales, es probable que un módulo fotovoltaico produzca más corriente o voltaje al referido en las condiciones de prueba normales. Consecuentemente, los valores de ISC y VOC marcados para este módulo se deben multiplicar por un factor de 1,25 para determinar el voltaje nominal de los componentes, las ampacidades de los conductores, los tamaños de los fusibles y el tamaño de los controles conectados a la salida fotovoltaica.
- Los módulos no se han de configurar de manera que puedan crear un voltaje superior al permitido por el sistema de voltaje.
- Las normativas y las regulaciones eléctricas nacionales, locales y regionales se deben cumplir estrictamente.
- Los módulos fotovoltaicos se pueden conectar en serie o en paralelo para conseguir la salida eléctrica deseada siempre que se cumplan ciertas condiciones. En un circuito fuente combinado utilice sólo el mismo tipo de módulos.
- Si los módulos se conectan conjuntamente en serie deben ser del mismo amperaje.
- Si se conectan en paralelo deben tener el mismo voltaje. La configuración de la secuencia se debe planificar y ejecutar en concordancia con las instrucciones del fabricante del invertidor.
- El número de módulos conectados a un invertidor debe estar entre los límites del voltaje/rango de funcionamiento del invertidor y el diseño de la configuración de la secuencia debe cumplir las instrucciones del fabricante del invertidor.
- Los diodos de bloqueo impiden el paso de corriente desde la batería hasta el módulo cuando no se genera electricidad. Es aconsejable utilizar diodos de bloqueo cuando no se utiliza un regulador de carga.

CONDICIONES DE FUNCIONAMIENTO

Todos los módulos de Samsung requieren las siguientes condiciones de funcionamiento:

1. Sólo aplicaciones terrestres; ni del espacio exterior ni condiciones especiales (ver a continuación)
2. La temperatura ambiente debe estar entre –40 °C (-40 °F) y +90 °C (194 °F).
3. La carga de presión del viento del emplazamiento de la instalación debe ser inferior a 2400 pascal /m².
4. Se pueden aplicar algunas condiciones medioambientales. Consulte las exclusiones de la garantía de Samsung.

cableado

GENERAL

- Todo el cableado debe cumplir con las normativas eléctricas aplicables.
- Todo el cableado lo debe realizar un profesional cualificado, certificado e inscrito, como tal, en el ministerio de Industria.
- El cableado debe estar protegido para ayudar a garantizar la seguridad de las personas y prevenir daños.
- Todos los módulos conectados en serie deben ser del mismo tipo y/o número de modelo.

CABLEADO DEL MÓDULO

- Compruebe las condiciones de temperatura locales y siga la normativa eléctrica nacional (por ej. NEC 690.7 para EEUU, DIN VDE 0100 Teil 712 para Alemania) para asegurarse de que se cumplen las limitaciones máximas de voltaje.
- Los módulos no están diseñados para sistemas de carga de batería o autónomos debido a su voltaje de funcionamiento. Por ello, no es recomendable utilizarlos para cargar baterías.
- Estos módulos incluyen diodos de derivación instalados de fábrica. Si estos módulos se conectan incorrectamente unos con otros, se pueden dañar los diodos de derivación, el cable o la caja de conexiones.

CABLEADO DEL BASTIDOR

- El término “bastidor” se utiliza para describir el montaje de varios módulos en una estructura de apoyo con cableado asociado.
- Samsung recomienda que todo el cableado sea de doble aislamiento con una temperatura mínima de 90 ºC (194 ºF). Todo el cableado debe utilizar conductores flexibles de cobre (Cu). El diámetro mínimo debe ser el especificado por la reglamentación correspondiente.
- Los módulos fotovoltaicos se deben cablear en serie para producir la salida de voltaje deseada. No se debe superar el voltaje de sistema máximo.
- Los módulos fotovoltaicos se pueden cablear en paralelo para producir la salida de corriente deseada. Consulte la reglamentación local o regional correspondiente para saber los requisitos de fusibles adicionales y las limitaciones en el número máximo de módulos fotovoltaicos en paralelo.

TERMINACIONES DEL MÓDULO

- Hay una caja de conexiones, a modo de regleta, para las conexiones eléctricas.

CAJA DE CONEXIONES Y TERMINALES

- Las cajas de conexiones de los módulos están en la parte posterior de éstos.
- Cada módulo está equipado con una caja de conexiones que incluye terminales para la polaridad positiva y negativa y diodos de derivación.
- Se debe respetar la polaridad de las conexiones para asegurar un funcionamiento correcto de los módulos; los símbolos de la polaridad están grabados en el cuerpo de la caja de conexiones.

DIODOS

- Si se hace sombra sobre una célula se puede provocar un voltaje de reserva en ésta. Esta célula por consiguiente consumirá la potencia generada por otras células de la serie, lo que originará un calentamiento no deseado de la célula en sombra.
- Se produce el efecto denominado punto caliente cuando una célula solar del interior de un módulo genera menos corriente que la corriente de secuencia del módulo o del generador fotovoltaico. Esto ocurre cuando la célula se encuentra total o parcialmente a la sombra, está dañada o si las células no coinciden eléctricamente. La célula en sombra adquiere una polarización inversa y la potencia se disipa en forma de calor.
- El uso de los diodos de protección, o de derivación, reduce el riesgo de calentamiento de las células en sombra, ya que limita la corriente que puede circular a través de ellas y evita las roturas.
- Todos los módulos están equipados con diodos de derivación instalados en fábrica. Estos diodos proporcionan una protección del circuito adecuada para los sistemas dentro de un voltaje del sistema especificado, de manera que no se necesitan otros diodos de derivación adicionales.
- Póngase en contacto con un representante autorizado de Samsung para conocer el tipo de diodo adecuado, si es necesario añadir o cambiar los diodos por especificaciones del sistema.

mantenimiento

Se necesita una supervisión y un mantenimiento tanto mecánico como eléctrico, es recomendable acudir a un profesional certificado e inscrito, como tal, en el ministerio de Industria, para que realice el servicio a fin de evitar riesgos de descargas eléctricas o lesiones.

PROCESOS DEL MANTENIMIENTO:

- Limpieza periódica del módulo
- Inspección visual de un posible deterioro interno y de la estanqueidad del módulo
- Control del cableado y de las conexiones eléctricas
- Eventualmente, control de las características eléctricas del módulo

LIMPIEZA PERIÓDICA DEL MÓDULO

- La suciedad de las superficies del módulo causa que las células queden en sombra y puede reducir la potencia de salida.
- Es recomendable limpiar la superficie del módulo con agua y un paño suave o una esponja, dos o más veces por año.
- Bajo ninguna circunstancia se debe rascar o frotar la suciedad seca de los módulos ya que ello podría originar microrrayaduras en la superficie del módulo y reducir la transparencia del vidrio del módulo. Se puede aplicar un detergente suave no abrasivo para eliminar la suciedad persistente.

INSPECCIÓN VISUAL DEL MÓDULO

- Posibles roturas en el vidrio
- Fijaciones seguras, ajustadas y sin corrosión
- Conexiones eléctricas seguras, ajustadas, limpias y sin corrosión
- Integridad mecánica intacta de los cables
- Puntos de las conexiones a tierra ajustados, seguros y sin corrosión para asegurar la continuidad entre los módulos y la conexión a tierra

CONTROL DE LAS CONEXIONES Y EL CABLEADO

- Las conexiones eléctricas y mecánicas se deben inspeccionar cada 6 meses a modo preventivo
- Se debe comprobar la fijación y el estado de los terminales de los cables de conexión del módulo
- Se debe comprobar la estanqueidad de la caja de conexiones

observaciones sobre la eliminación

Este producto se debe desechar de acuerdo con las normativas y regulaciones locales y nacionales. Es responsabilidad del cliente asegurar que este producto se elimine adecuadamente.

Puede ponerse en contacto con el representante local de Samsung en relación con la eliminación correcta de este producto.

Samsung no aceptará la devolución de ningún módulo a menos que lo haya autorizado previamente por escrito.

SAMSUNG

Samsung takes on the Solar Challenge

Developing viable solar power systems is one of the great tasks facing the world today, and Samsung is now in the race.
We are poised to repeat our success in solar power generation.
Our track record speaks for itself.

		LPC235SM	LPC238SM	LPC241SM	LPC244SM	LPC247SM	LPC250SM
Performance at Standard Test Conditions (STC) : Irradiance 1000 W/m², AM 1.5, and cell temperature 25 °C							
Maximum power	Pmax (Wp)	235	238	241	244	247	250
Maximum power voltage	Vmp (V)	29.9	30.0	30.1	30.3	30.4	30.5
Maximum power current	Imp (A)	7.88	7.94	8.01	8.07	8.14	8.20
Open circuit voltage	Voc (V)	37.2	37.3	37.4	37.5	37.6	37.6
Short circuit current	Isc (A)	8.47	8.51	8.54	8.58	8.62	8.66
Module efficiency		14.68%	14.87%	15.06%	15.24%	15.43%	15.62%
Performance at Nominal Operating Cell Temperature (NOCT) : Irradiance 800 W/m², AM 1.5							
Maximum power	Pmax (Wp)	188	190	194	196	198	200
Maximum power voltage	Vmp (V)	30.4	30.2	30.3	30.4	30.5	30.9
Maximum power current	Imp (A)	6.21	6.31	6.43	6.48	6.49	6.51
Open circuit voltage	Voc (V)	37.2	37.3	37.4	37.3	37.4	37.6
Short circuit current	Isc (A)	6.65	6.66	6.84	6.88	6.89	6.90

* The rated power may only vary by 0 Wp / +2.99 Wp.

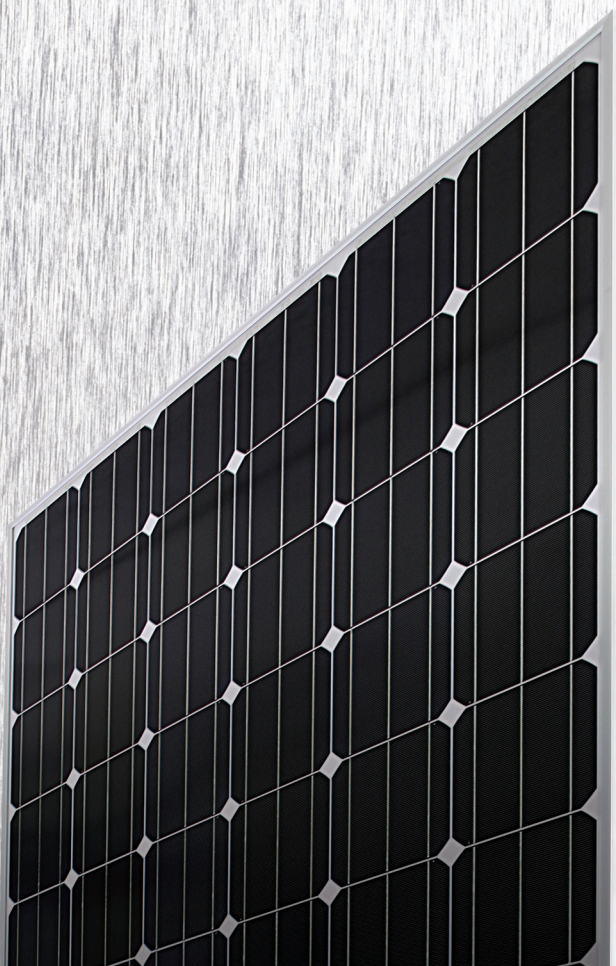

System integration parameters	
Maximum system voltage (IEC)	1,000 VDC
Maximum system voltage (UL)	600 VDC
Maximum series fuse rating	15 A
Maximum reverse current	Do not apply external voltages larger than Voc to the module

Safety Ratings & Warranties	
Fire Safety Classification	Class C
Certifications	UL 1703, CEC, IEC61215, IEC61730
Warranty	5 years limited product warranty
Performance guarantee	10 years limited warranty of 90% power output
	25 years limited warranty of 80% power output

Qualification Test	
Temp cycling range	-40 °C to 85 °C for 200 cycles
Damp heat test	85 °C and 85% relative humidity for 1000 hr
Front load test (Snow)	5400 Pa
Rear static load test(Wind)	2400 Pa
Hailstone impact test	25 mm hail at 23 m/s from 1 m distance

Temperature coefficients	
NOCT	46±2 °C
TC Isc	0.07%/K
TC Voc	-0.35%/K
TC Pmax	-0.48%/K

(NOCT : Nominal Operating Cell Temperature)

Packing Configuration	
Container	40'HC
Piece per pallet	20
Pallets per container	26

Physical characteristics (UL, VDE)	
Cells per module	60
Cell type	Mono-crystalline silicon
Module dimensions	1630 x 982 x 47 mm, 64.17 x 36.66 x 1.85 in.
Module weight	18.6 kg (41 lbs)
Junction box	IP65
Frame	Anodized Aluminum
Front Glass	3.2 mm(0.13 in.) Tempered glass
Output Cable	(-)900 mm, (+)900 mm, (-)35.43 in., (+)35.43 in. UL : Tyco Solarlok Connector(6-1394461-2) VDE : Bizlink S418-xyz series(S418-xyz)

I-V curve

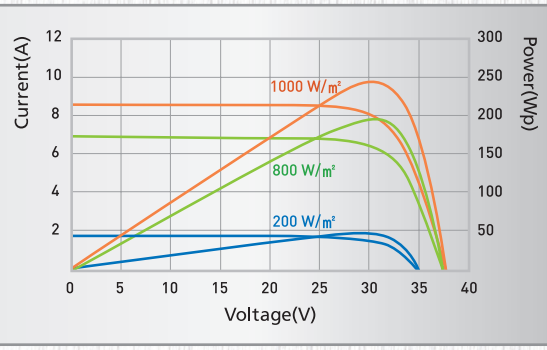

FRONT

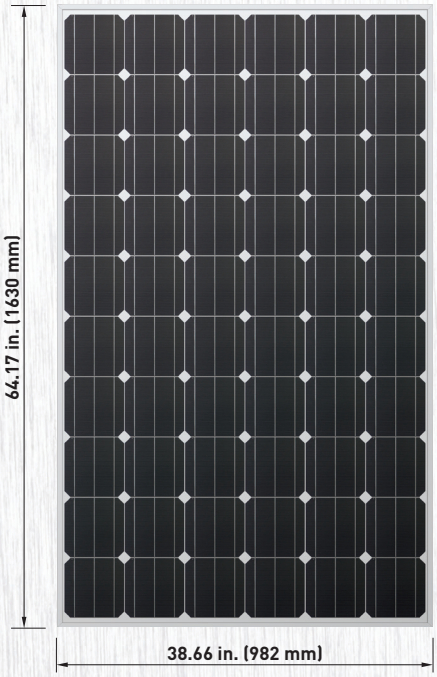

REAR

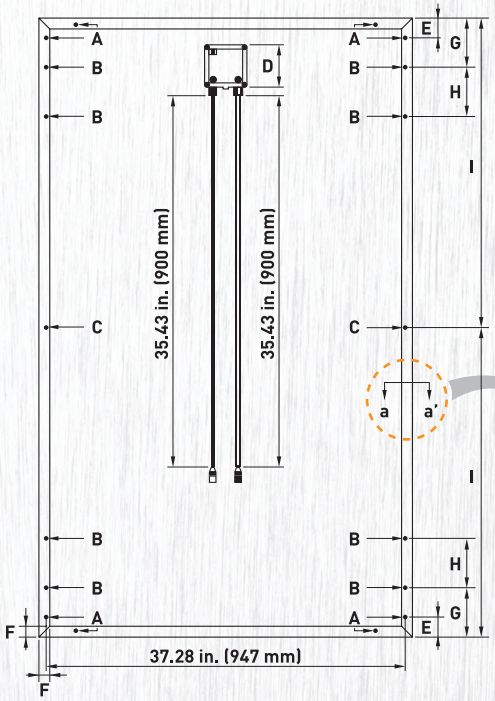

A	Ø 0.24 in. (6 mm)
B	Ø 0.31 in. (8 mm)
C	Ø 0.16 in. (4 mm)
D	4.44 in. (110 mm)
E	2.05 in. (52 mm)
F	1.10 in. (28 mm)
G	5.12 in. (130 mm)
H	10.24 in. (260 mm)
I	32.09 in. (815 mm)
J	0.47 in. (12 mm)
K	0.22 in. (5.7 mm)
L	1.85 in. (47 mm)

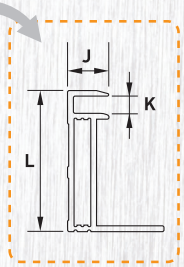

a-a'

SIDE

* All data subject to change without prior notice.

SAMSUNG ELECTRONICS CO., LTD.
San# 24 Nongseo-Dong, Giheung-Gu, Yongin-City, Gyeonggi-Do, Korea 446-711
http://www.samsung.com/us/business/solarmodule
May 2010

superbrightleds.com
Home | Info & Policies | Site Index | Search
$0.00
Vehicle Bulb Finder BETA
New Products: Striker Mine Light Professional...See All
Tech Support Live Chat | Blog
Car Bulbs | Bars/Strips | Household Bulbs | Boat/RV | Landscape | Other Bulbs | Accent Lighting | Truck/Trailer | Misc/General | Component LEDs

WFLS and NFLS RGB series Flexible Light Strips

197 Inch Light Strip on reel with 150 or 300 High Power 5050SMD RGB LEDs, 39 Inch Light Strip with 30 High Power RGB LEDs, and 19.5 Inch Light Strip with 15 High Power RGB LEDs. 12 VDC Operation, Strips can be cut into 3-LED (4in.) segments. LEDs on highly flexible strip with adhesive backing. No RGB controller on board, strips have separate RGB power inputs and common anode wire, Use any of our Universal RGB Controllers below to dynamically control the strips - Due to voltage drop, after 10 meters run wire back to source.

Accessories: Solderless Connectors,4-Channel Wire | Information: 12V IP 65 | Available Colors:

See Prices & Buy | Go Back

6

More Photos

Click photos to see larger view

How To Videos

Click Photo to view "how to" video

NFLS & WFLS series RGB Light Strips

SPECIFICATIONS

Part NO	Number of LEDs on Strip	Emitting Color	Operating Voltage Range Unit: VDC	Current Draw @ 12 Volts Unit: mA	Single LED Luminous Intensity** Unit: mcd	Dominant Wavelength / CCT* UNIT: nm / K	Beam Pattern Unit: degrees	Price Each† Unit: USD WFLS	Price Each† Unit: USD NFLS
xFLS-RGB15	15	RGB	9~14.8	80 60 62	1200	626 525 470	180	16.95	14.95

xFLS-RGB30	30	RGB	9~14.8	160 120 124	1200	626 525 470	180	29.95	25.95
xFLS-RGB150	150	RGB	9~14.8	700 560 595	1200	626 525 470	180	149.95	129.95
xFLS-RGB300	300	RGB	9~14.8	1275 995 1025	1200	626 525 470	180	265.95	229.95

NOTE: Due to voltage drop, after 10 meters run wire back to source

* White LED Note: Correlated Color Temperature measured in Kelvin, higher numbers indicate blue/purple tint (similar to HID lamps), standard incandescent bulbs are around 3000K

** **To convert luminous intensity to lumens use the Intensity to Lumens Converter Calculator**

† The following quantity discounts are available: 10% at 50+ pcs, 20% at 100+ pcs, 25% at 500+ pcs, 30% at 1000+ pcs. Click here for for info on quantity discounts

All specifications are subject to change without notice

SUITABLE FOR AUTOMOBILE APPLICATIONS - AVAILABLE WEATHERPROOF

NFLS-RGB

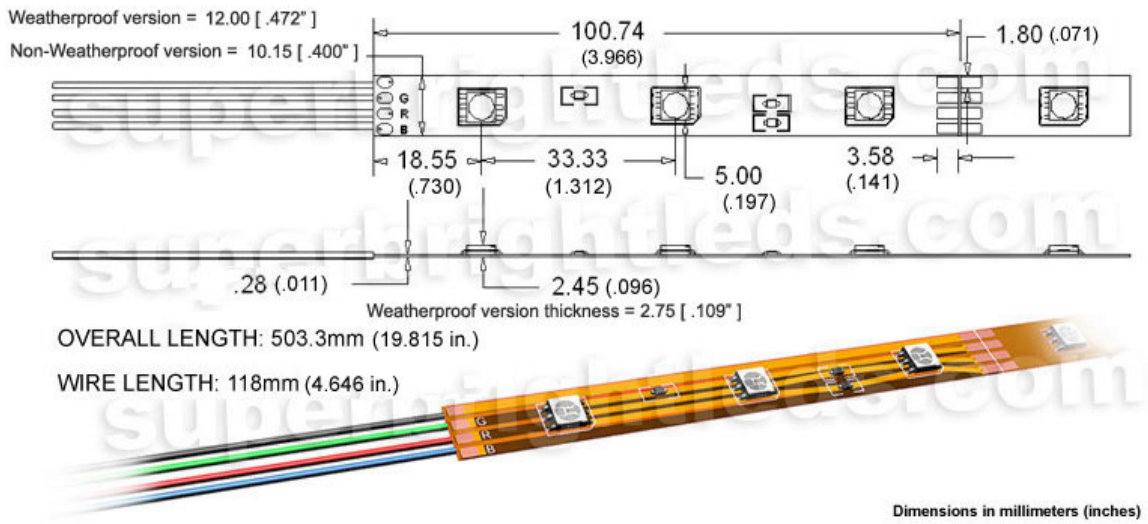

Wire Length: 118 mm / 4.5 in

22 ga. wire

RoHS

NFLS-4CS

NFLS-RGB strip solderless interconnect

Wire Length: 108 mm / 4.25 in

22 ga. wire

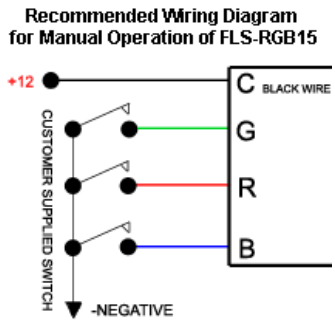

RGB-Wire (sold by the foot) also available in this shopping category

Maximum Flexibility Precaution

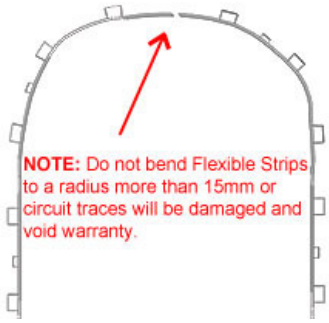

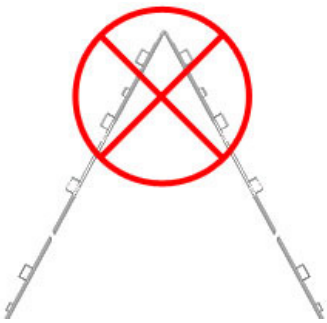

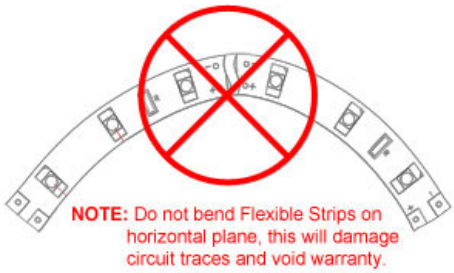

Environmentally Friendly Products
Live Chat
RoHS 2002/95/EC
superbrightleds.com
© 2002-2011 Super Bright LEDs Inc. St. Louis Missouri, USA
ACCREDITED BUSINESS
VERIFIED BY GeoTrust Super Bright... CLICK 03.05.11 14:21 UTC

KUL Series Latching Panel Plug-in Relay

- **Magnetic latching (bistable) relay**
- **Single or dual wound DC coils or single wound AC coils**
- **1, 2, and 3 pole Form C contact arrangement**
- **Reset occurs by reversing polarity in a single coil relay or by energizing the reset winding in dual coil relays**
- **Various mounting and socket styles**

Typical applications
Alarm systems, machine tools, battery chargers, process and power controls, pressure washers, paving equipment

Approvals

UL E22575; CSA LR15734

Technical data of approved types on request

Contact Data

Contact arrangement	1 form C (CO), 2 form C (CO), 3 form C (CO)	
Rated voltage	240VAC	
Rated current	10A	
Contact material	Ag	AgCdO
Min. recommended contact load	100mA, 12VDC	300mA, 12VDC
Frequency of operation	360 ops./hour	
Operate/release time max.	25/25ms	

Contact ratings

Type	Load	Cycles
UL 508		
Ag		
	5A, 240VAC	$100x10^3$
	1/6HP, 120VAC	
	1/3HP, 240VAC	
	0.5A, 120VDC	
	2.5A, 120VAC, tungsten	
AgCdO		
	10A, 250VAC	$100x10^3$
	1/3HP, 120VAC	
	1/2HP, 250VAC	
	5A, 120VAC, tungsten	
	0.5A, 125VDC	
	10A, 28VDC	$100x10^3$
	10FLA, 30LRA, 125VAC	
	5FLA, 15LRA, 250VAC	
	125VA, pilot duty, 125/250VAC	
Mechanical endurance	$10x10^6$ ops.	

Coil Data

Coil voltage range	12 to 110VDC (single and dual coil) 24 to 240VAC (single coil) 24 to 120VAC (dual coil)
Coil insulation system according UL	Class B

Coil versions, DC coil 1)

Coil code	Rated voltage VDC	Operate voltage VDC	Coil resistance Ω±10%	Rated coil power W
Single coil				
12	12	9.0	120	1.2
24	24	18.0	472	1.25
48	48	36.0	1800	1.3
110	110	82.5	10000	1.25
Dual coil 2)				
12	12	9.0	90	1.6
24	24	18.0	350	1.65
48	48	36.0	1400	1.65
110	110	82.5	7400	1.65

1) Latch and reset coil voltages and resistances are the same (unlike coils on request).
2) Dual coil available only with 1 or 2 form C contacts.
All figures are given for coil without preenergization, at ambient temperature +23°C.

Coil versions, AC coil 3)

Coil code	Rated voltage VAC	Operate voltage VAC	Latch coil resistance Ω±15%	Reset coil resistance Ω±15%	Reset coil resistor Ω
Single coil					
24	24	20.4	176	–	680
120	120	102.0	3700	–	15000
240	240	204.0	179000	–	68000
Dual coil					
24	24	20.4	100	250	–
120	120	102.0	2525	2200	5600

3) AC coils use diodes. Diodes and resistors included inside relay with 1 and 2 Form C contacts. For 3 Form C relay, the customer must furnish and wire diodes and resistors externally (1N4007 is recommended diode).
All figures are given for coil without preenergization, at ambient temperature +23°C.

Insulation Data

Initial dielectric strength	
between open contacts	$500V_{rms}$
between contact and coil	$1500V_{rms}$
between adjacent contacts	$1500V_{rms}$
Initial insulation resistance	
between insulated elements	100MΩ

09-2010, Rev. 0910

www.te.com
© 2010 Tyco Electronics Ltd.

Datasheets and product specification according to IEC 61810-1 and to be used only together with the 'Definitions' section.

Datasheets and product data is subject to the terms of the disclaimer and all chapters of the 'Definitions' section, available at http://relays.te.com/definitions

Datasheets, product data, 'Definitions' section, application notes and all specifications are subject to change.

KUL Series Latching Panel Plug-in Relay (Continued)

Other Data

Material compliance:	EU RoHS/ELV, China RoHS, REACH, Halogen content refer to the Product Compliance Support Center at www.te.com/customersupport/rohssupportcenter
Ambient temperature	
DC coil	Single coil: -45ºC to 70ºC Dual coil: -45ºC to 50ºC
AC coil	Single coil: -45ºC to 70ºC
Category of environmental protection	
IEC 61810	RTI - dust protected
Terminal type	Quick connects (QC) .187
Weight	96g
Packaging/unit	tray/25 pcs., box/150pcs.

Accessories

For details see datasheet Sockets and Accessories, KUP Relays

Product Code	Description
27E893	DIN socket and 20C318 clip
27E121	Track mount socket and 20C314 clip
27E043	Chassis mount/solder eyelet socket and 20C254 clip
27E046	Chassis mount/PCB socket and 20C254 clip
27E067	Chassis mount/quick connect socket and 20C254 clip
27E396	Snap-in/quick connect socket and 20C254 clip

Dimensions

Plain case

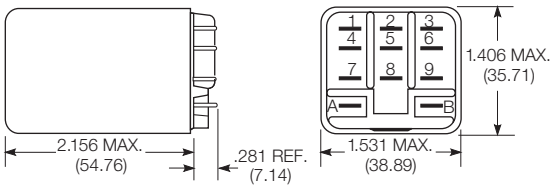

Bracket mount case

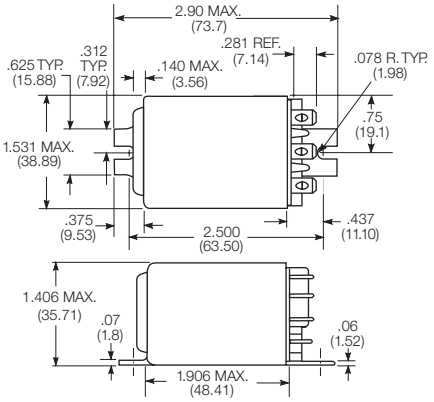

Terminal dimensions

4.75mm (.187) quick connect

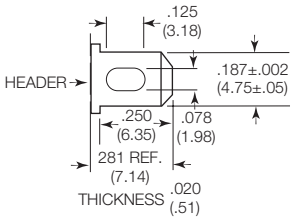

09-2010, Rev. 0910

www.te.com
© 2010 Tyco Electronics Ltd.

Datasheets and product specification according to IEC 61810-1 and to be used only together with the 'Definitions' section.

Datasheets and product data is subject to the terms of the disclaimer and all chapters of the 'Definitions' section, available at http://relays.te.com/definitions

Datasheets, product data, 'Definitions' section, application notes and all specifications are subject to change.

KUL Series Latching Panel Plug-in Relay (Continued)

Terminal assignment
Bottom view on pins – Contact positions shown in diagrams is with the "RESET" input having been energized last.

Single Coil – DC
1 Form C

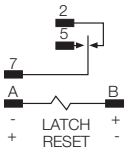

2 Form C

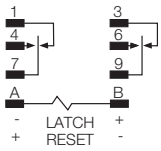

3 Form C

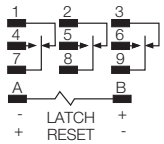

Dual Coil – AC or DC
1 Form C

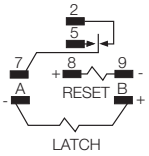

Polarity for DC only.

2 Form C

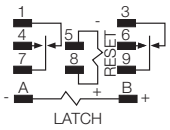

Polarity for DC only.

Single Coil – AC
1 Form C

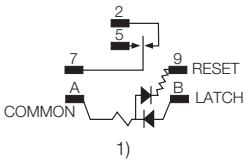

2 Form C

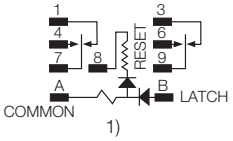

3 Form C

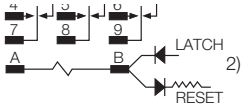

1) Do not connect any low impedance loads from terminal B to A.
2) Resistor and diodes connected by customer. See Coil Data Chart for resistor value. Recommended using 1N4007 diode.

Product code structure — Typical product code: **KUL -11 D 1 1 D -12**

Type
- **KUL** Enclosed magnetic latching relay

Contact arrangement and rating
- **5** 1 form C (1 CO)
- **11** 2 form C (2 CO)
- **14** 3 form C (3 CO)

Coil Input
- **A** AC
- **D** DC

Mounting and options
- **1** Socket mount (plain) case
- **5** Bracket mount case

Terminal and contact material
- **1** 4.75mm (.187in) quick connect/solder; Ag, 5A
- **5** 4.75mm (.187in) quick connect/solder; AgCdO, 10A
- Note: 5.21mm (.205) QC and PCB terminals available on request

Number of coils
- **S** Single coil
- **D** Dual coil

Coil voltage
- Coil code: please refer to coil versions table

Product Code	Arrangement	Material	Coil	Case Style	Terminals	Part Number
KUL-5A15S-120	1 Form C, 1 CO	AgCdO	120 VAC	Plain case	Plug-in	1393116-4
KUL-11A15S-24	2 Form C, 2 CO		24 VAC			2-1393115-7
KUL-11A15S-120			120 VAC			2-1393115-6
KUL-11D15D-12			12 VDC			3-1393115-1
KUL-11D15D-24			24 VDC			3-1393115-2
KUL-11D15D-48			48 VDC			3-1393115-3
KUL-11D15S-12			12 VDC			3-1393115-4
KUL-11D15S-24			24 VDC			3-1393115-5

09-2010, Rev. 0910
www.te.com
© 2010 Tyco Electronics Ltd.

Datasheets and product specification according to IEC 61810-1 and to be used only together with the 'Definitions' section.

Datasheets and product data is subject to the terms of the disclaimer and all chapters of the 'Definitions' section, available at http://relays.te.com/definitions

Datasheets, product data, 'Definitions' section, application notes and all specifications are subject to change.

INVERTER GUIDE

Please also refer to the SMA design tool, Sunny Design, which can be downloaded free-of-charge at www.SMA-America.com.

	SUNNY BOY 700U			SUNNY BOY 3000US		SUNNY BOY 4000US		SUNNY BOY 5000US			SUNNY BOY 6000US			SUNNY BOY 7000US			SUNNY TOWER 36			SUNNY TOWER 42			SUNNY CENTRAL 250U	SUNNY CENTRAL 500U PRELIMINARY
(Input Voltge) Output Voltage	(150 Vdc)	(200 Vdc)	(250 Vdc)	208 V	240 V	208 V	240 V	208 V	240 V	277 V	208 V	240 V	277 V	208 V	240 V	277 V	208 V	240 V	277 V	208 V	240 V	277 V	NA	NA
DC Input Values																								
Recommended Max. PV Power (Module STC)	575 W	750 W	875 W	3750 W		4375 W	5000 W	6250 W			7500 W			8750 W			45 kW			52.5 kW			295 kW	580 kW
DC Max. Voltage	150 V	200 V	250 V	500 V		600 V	600 V	600 V			600 V			600 V			600 V			600 V			600 V	600 V
Peak Power Tracking Voltage	77–120 V	100–160 V	125–200 V	175–400 V	200-400 V	220–480 V	250–480 V	250–480 V			250–480 V			250–480 V			250–480 V			250–480 V			300 V–600 V	300 V–600 V
DC Minimum Start Voltage	95 V	125 V	150 V	228 V		285 V		300 V			300 V			300 V			300 V			300 V			400 V	400 V
DC Max. Input Current	7 A			17 A		18 A		21 A			25 A			30 A			150 A			180 A			800 A	1600 A
Number of Fused String Inputs	2			2 (Inverter) 4 x 15 A (DC Disconnect)		2 (Inverter) 4 x 15 A (DC Disconnect)		3 (Inverter) 4 x 15 A (DC Disconnect)			3 (Inverter) 4 x 15 A (DC Disconnect)			3 (Inverter) 4 x 15 A (DC Disconnect)			24 x 15A AC/DC Disconnect			24 x 15A AC/DC Disconnect			6	9
AC Output Values																								
AC Nominal Power	460 W	600 W	700 W	3000 W		3500 W	4000 W	5000 W			6000 W			7000 W			36.0 kW			42.0 kW			250 kW	500 kW
AC Max. Output Power	460 W	600 W	700 W	3000 W		3500 W	4000 W	5000 W			6000 W			7000 W			36.0 kW			42.0 kW			250 kW	500 kW
AC Max. Output Current	4.4 A	5.7 A	6.6 A	15 A	13 A	17 A	17 A	24 A	21 A	18 A	29 A	25 A	22 A	34 A	29 A	25 A	100 A	87 A	44 A	117 A	101 A	51 A	300 A (@ 480 V)	600 A (@ 480 V)
AC Output Voltage Range	106–132 V			183–229 V	211–264 V	183–229 V	211–264 V	183–229 V	211–264 V	244–305 V	183–229 V	211–264 V	244–305 V	183–229 V	211–264 V	244–305 V	183–229 V	211–264 V	244–305 V	183–229 V	211–264 V	244–305 V	422–528 V	422–528 V
AC Nominal Voltage/Field Configurable	120 V/NA			208 V/YES	240 V/YES	208 V/YES	240 V/YES	208 V/YES	240 V/YES	277 V/YES	208 V/YES	240 V/YES	277 V/YES	208 V/YES	240 V/YES	277 V/YES	208 V/YES	240 V/YES	277 V/YES	208 V/YES	240 V/YES	277 V/YES	480 V/NA	480 V/NA
Total Harmonic Distortion	< 3%			< 4%		< 4%		< 4%			< 4%			< 4%			< 4%			< 4%			< 5%	< 5%
AC Frequency: Nominal/Range	60 Hz/59.3–60.5 Hz			60 Hz/59.3–60.5 Hz		60 Hz/59.3–60.5 Hz		60 Hz/59.3–60.5 Hz			60 Hz/59.3–60.5 Hz			60 Hz/59.3–60.5 Hz			60 Hz/59.3–60.5 Hz			60 Hz/59.3–60.5 Hz			60 Hz/59.3–60.5 Hz	60 Hz/59.3–60.5 Hz
Power Factor	0.99 @ Nominal Power			0.99 @ Nominal Power		0.99 @ Nominal Power		0.99 @ Nominal Power			0.99 @ Nominal Power			0.99 @ Nominal Power			0.99 @ Nominal Power			0.99 @ Nominal Power			0.99 @ Nominal Power	0.99 @ Nominal Power
Efficiency																								
Max. Efficiency	93.6 %			96.5%		96.8%		96.8%			97.0%			97.1%			97.0%			97.1%			97.5%	97.5%
CEC Efficiency	91.5 %			95.0%	95.5%	95.5%	96.0%	95.5 %			95.5 %	95.5 %	96.0 %	95.5 %	96.0 %	96.0 %	95.5%	95.5%	96%	95.5 %	96.0 %	96.0 %	97%	97%
Safety & Regulatory Compliance																								
EMC	FCC, Part 15, Class A & B			FCC, Part 15, Class A & B		FCC, Part 15, Class A & B		FCC, Part 15, Class A & B			FCC, Part 15, Class A & B			FCC, Part 15, Class A & B			FCC, Part 15, Class A & B			FCC, Part 15, Class A & B			FCC, Part 15, Class A & B	FCC, Part 15, Class A & B
Certification	UL1741, UL1998 IEEE 1547			UL1741, UL1998 IEEE 1547		UL1741, UL1998 IEEE 1547		UL1741, UL1998 IEEE 1547			UL1741, UL1998 IEEE 1547			UL1741, UL1998 IEEE 1547			UL1741, UL1998 IEEE 1547			UL1741, UL1998 IEEE 1547			UL1741, UL1998 IEEE 1547	UL1741, UL1998 IEEE 1547
Reverse Polarity Protection	Short Circuit Diode			Short Circuit Diode		Short Circuit Diode		Short Circuit Diode			Short Circuit Diode			Short Circuit Diode			Short Circuit Diode			Short Circuit Diode			Software Controlled	Software Controlled
Short-Circuit Protection	Current Controlled			Current Controlled		Current Controlled		Current Controlled			Current Controlled			Current Controlled			Current Controlled			Current Controlled			Current Controlled	Current Controlled
General Information																								
Size (HxWxD) (in) Size DC Disconnect (HxWxD) (in)	12.6 x 12.7 x 7.1 in			13.8 x 17.8 x 9.3 in 11 x 7.3 x 7.6 in		13.8 x 17.8 x 9.3 in 11 x 7.3 x 7.6 in		24.1 x 18.4 x 9.5 in 11 x 7.3 x 7.6 in			24.1 x 18.4 x 9.5 in 11 x 7.3 x 7.6 in			24.1 x 18.4 x 9.5 in 11 x 7.3 x 7.6 in			70.5 x 43.3 x 39 in			70.5 x 43.3 x 39 in			80 x 110 x 33	80 x 134 x 33
Shipping Size (in) Shipping Size DC Disconnect (in)	9 x 15 x 15 in			19 x 15 x 23 in 22.8 x 16 x 11 in		19 x 15 x 23 in 22.8 x 16 x 11 in		31 x 15 x 23 in 22.8 x 16 x 11 in			31 x 15 x 23 in 22.8 x 16 x 11 in			31 x 15 x 23 in 22.8 x 16 x 11 in			41 x 45 x 79 in Call for Info			41 x 45 x 79 in Call for Info			88 x 74 x 40 and 88 x 48 x 40	88 x 96 x 40 and 88 x 59.5 x 40
Weight (lbs) Weight DC Disconnect (lbs)	51 lbs			84 lbs 8 lbs		84 lbs 8 lbs		141 lbs 8 lbs			141 lbs 8 lbs			141 lbs 8 lbs			330 lbs/ 1176 lbs with 6 inverters			330 lbs/ 1176 lbs with 6 inverters			4200 lbs	6725 lbs
Shipping Weight (lbs) Shipping Weight DC Disconnect (lbs)	57 lbs			97 lbs 9 lbs		97 lbs 9 lbs		148 lbs 9 lbs			148 lbs 9 lbs			148 lbs 9 lbs			500 lbs/ 1388 lbs with 6 inverters Call for Info			500 lbs/ 1388 lbs with 6 inverters Call for Info			1863 lbs and 3186 lbs	2737 lbs and 4846 lbs
Ambient Temperature Range	-13 to + 113 °F -25 to + 45 °C			-13 to + 113 °F -25 to + 45 °C		-13° to + 113 °F -25° to + 45° C		-13 to + 113 °F -25 to + 45 °C			-13 to + 113 °F -25 to + 45 °C			-13 to + 113 °F -25 to + 45 °C			-13 to + 113 °F -25 to + 45 °C			-13 to + 113 °F -25 to + 45 °C			– 13 to 123 °F full power output up to 122 °F at reduced power	– 13 to 123 °F full power output up to 122 °F at reduced power
Power Consumption: standby/nighttime	<4 W/0.1 W			< 7 W/0.1 W		< 7 W/0.1 W		<7 W/0.1 W			<7 W/0.1 W			<7 W/0.1 W			<42 W/0.6 W			<42 W/0.6 W			69 W Standby, <1000 W with fans	69 W Standby, <1500 W with fans
Topology	Low frequency transformer True sinewave			Low frequency transformer True sinewave		Low frequency transformer True sinewave		Low frequency transformer True sinewave			Low frequency transformer True sinewave			Low frequency transformer True sinewave			Low frequency transformer True sinewave			Low frequency transformer True sinewave			Low frequency transformer, True sinewave with galvanic insulation	Low frequency transformer, True sinewave with galvanic insulation
Cooling Concept	Convection			OptiCool Forced Active Cooling		OptiCool Forced Active Cooling		OptiCool Forced Active Cooling			OptiCool Forced Active Cooling			OptiCool Forced Active Cooling			OptiCool Forced Active Cooling			OptiCool Forced Active Cooling			Variable speed forced air	Variable speed forced air
Mounting Location: Indoor/Outdoor (NEMA 3R)	●/● (NEMA 3X)			●/●		●/●		●/●			●/●			●/●			●/●			●/●			●/●	●/●
Features																								
Display: LCD	●			●		●		●			●			●			●			●			●	●
Additional Communication Boards: RS485/Wireless	❍/❍			❍/❍		❍/❍		❍/❍			❍/❍			❍/❍			❍/❍			❍/❍			❍/❍	❍/❍
Lid Color: aluminum/red/blue/yellow	-/●/❍/❍			●/❍/❍/❍		●/❍/❍/❍		●/❍/❍/❍			●/❍/❍/❍			●/❍/❍/❍			●/❍/❍/❍			●/❍/❍/❍			NA	NA
Warranties	10 year			10 year		10 year		10 year			10 year			10 year			10 year			10 year			5 year	5 year

Legend: ● Standard ❍ Optional Data under nominal conditions.

Last modified: October 2008 - Technical specifications subject to change without notice.

SMA, Sunny Boy, Sunny Tower, Sunny Central, and OptiCool are registered trademarks of SMA Solar Technology AG.

INVERTER_POSTER102808 Text and graphics correspond to the state of technology at the time of printing. Subject to technical changes. We accept no liability for typographical errors. Printed on chlorine-free paper.

SMA America, Inc.
www.SMA-America.com

5W Interchangeable Plug Series
PSA05R Adapter Meets CEC and EISA Requirements

Features

- Double Insulated
- Field Changeable AC Plugs
- Efficiency Level IV Compliance
- Low Leakage Current
- Low Cost
- Class B EMI

Applications

- MP3 Players
- PDAs
- Personal Electronics
- Digital Cameras

Safety Approvals

- cUL/UL
- TUV
- SAA
- CE
- C-Tick

Mechanical Characteristics

- Length: 71.7mm (2.82in)
- Width: 45mm (1.77in)
- Height: 31mm(1.22in)
- Weight: 120g (4oz)

Output Specifications

Model (1)	DC Output Voltage	Load		Ripple (2)	Regulation		Efficiency Level
		Min.	Max.	P-P (max.)	Line	Load	
PSA05R-033-R	3.3V	0A	1.2A	50mV	±1%	±5%	IV 115V AC III
PSA05R-050-R	5V	0A	1.0A	50mV	±1%	±5%	IV
PSA05R-090-R	9V	0A	0.56A	90mV	±1%	±5%	V
PSA05R-120-R	12V	0A	0.42A	120mV	±1%	±5%	IV

Note: (1) PSA05R-033 and PSA05R-050 are available in special order quantities only, contact Phihong for more information.
(2) Measured after 10 minutes with by-pass capacitors 0.1uF // 10uF at output connector terminal.

Interchangeable clips sold separately.

Phihong is not responsible for any error, and reserves the right to make changes without notice. Please visit our website at www.phihong.com for the most up-to-date specifications and contact information.

PSA05R Characteristics

WWW.PHIHONG.COM

Input:

AC Input Voltage Rating
100 to 240V AC

AC Input Voltage Range
90 to 264V AC

AC Input Frequency
47 to 63Hz

Input Current
0.25A (RMS) maximum at 120V AC
0.125A (RMS) maximum at 240V AC

Leakage Current
<0.25mA maximum at 254V AC

Inrush Current
30A for 120V AC at maximum load
60A for 240V AC at maximum load
(Cold start at ambient 25°C)

Input Power Saving
0.3W maximum for 9V model
0.5W maximum for 3.3V, 5V and 12V models

Output:

Efficiency
≥72.3% average efficiency for 9V model
≥64.5% average efficiency for 5V and 12V models
≥62.4% average efficiency at 115V AC, ≥61.4% average efficiency at 230V AC for 3.3V model

Environmental:

Temperature

Operation	0 to +40°C
Non-operation	-25 to +85°C
Humidity	10 to 90%

EMI
FCC Class B
EN55022 Class B

Immunity

EN61000-4-2	Level 3
EN61000-4-3	Level 2
EN61000-4-4	Level 2
EN61000-4-5	Level 3
EN61000-4-6	Level 3
EN61000-4-11	

Harmonic	EN61000-3-2
Flicker	EN61000-3-3

Hold-up Time
10mS minimum at 120V AC and maximum load

Over-Voltage Protection
< 120%, Zener Clamp

Short-Circuit Protection
>120% auto restart

MTBF
150K hours minimum at full load and 110V AC, 60Hz (measured at ambient 25°C)

Dielectric Withstand (Hi-pot) Test
Input to Output: 3000V AC for 1 min., 10mA

DC Output Connector
2.1 x 5.5 x 9.5mm Center Positive Barrel Standard

AC Input Clips (Sold Separately)

US: RPA	Korea: RPH
Europe: RPE	Brazil: RPB
UK: RPK	India: RPI
Australia: RPS	Argentina: RPN
China: RPC	

Dimension Diagram Unit: mm (inch)

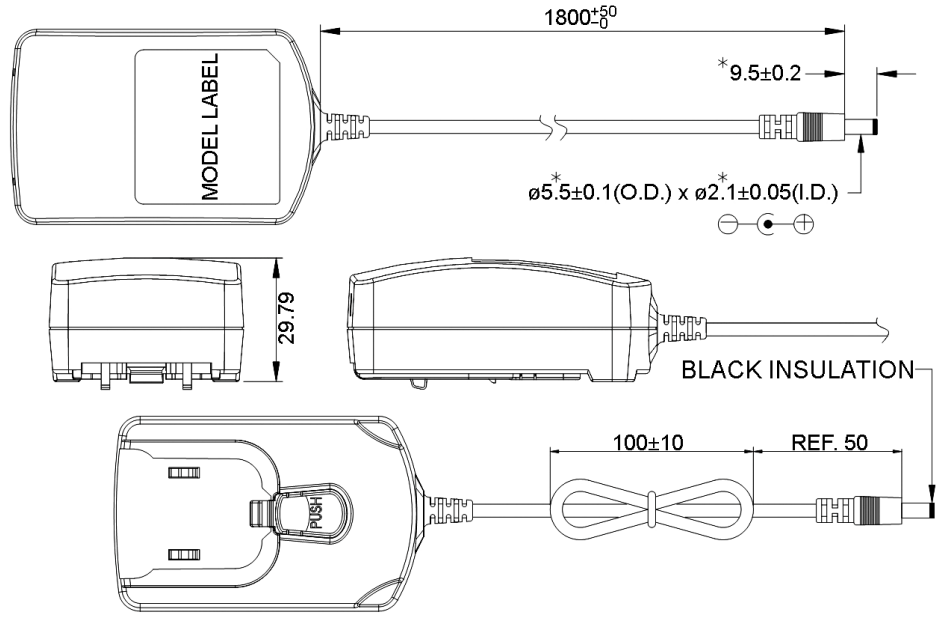

ALESIS

MultiMix8USB 2.0

MULTICHANNEL MIXER/AUDIO INTERFACE

Quick Start Owner's Manual
(ENGLISH)

BOX CONTENTS

- MIXING CONSOLE
- POWER SUPPLY
- USB 2.0 CABLE
- SOFTWARE DVD

Manual de inicio rápido para el usuario
(ESPAÑOL)

CONTENIDOS DE LA CAJA

- MIXING CONSOLE
- FUENTE DE ALIMENTACIÓN
- CABLE USB 2.0
- DVD DE SOFTWARE

Bedienungsanleitung
(DEUTSCH)

INHALT DER VERPACKUNG

- MISCHPULT
- NETZANSCHLUSS
- USB 2.0 KABEL
- SOFTWARE DVD

Manuel d'utilisation du propriétaire
(FRANÇAIS)

CONTENUE DE LA BOÎTE

- CONSOLE DE MIXAGE
- CÂBLE D'ALIMENTATION
- CÂBLE USB 2.0
- DVD LOGICIEL

Manuale rapido di utilizzazione
(ITALIANO)

CONTENUTO DELLA CONFEZIONE

- CONSOLE DI MISSAGGIO
- ALIMENTAZIONE
- CAVO USB 2.0
- DVD CONTENENTE IL SOFTWARE

This page intentionally left blank.

ALESIS

MultiMixUSB 2.0

MULTICHANNEL MIXER/AUDIO INTERFACE

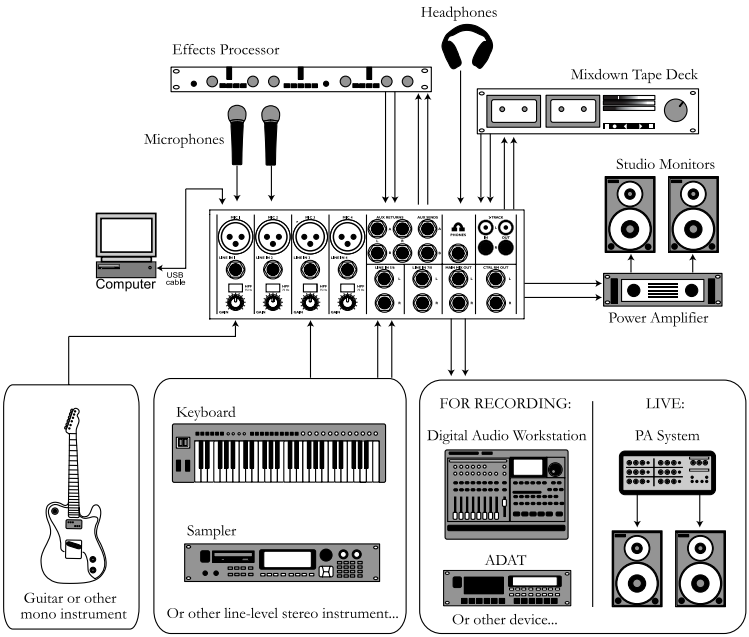

MULTIMIX USB 2.0
QUICK START OWNERS MANUAL
(ENGLISH)

1. Make sure all items listed on the front of this guide are included in the box.
2. **READ SAFETY INSTRUCTION BOOKLET BEFORE USING THE PRODUCT.**
3. Study this setup diagram.
4. Place the MultiMix in an appropriate position for operation.
5. Make sure all devices are turned off and all volumes are at "zero."
6. Connect all input sources as indicated in the diagram.
7. Connect the outputs to the power amplifier(s), tape decks, and/or audio sources.
8. Connect the USB 2.0 cable to a computer.
9. Plug your MultiMix and other devices into AC power.
10. Switch everything on in the following order:
    - Audio input sources
    - External effects, recording devises or equalizers
    - The MultiMix USB 2.0
    - Amplifiers
    - Computer
11. When turning off, always reverse this operation by:
    - Turning off computers
    - Turning of amplifiers
    - Turning off the MultiMix USB 2.0
    - External effects, recording devises or equalizers
    - Last, any input devices
12. Go to http://www.alesis.com/ for product registration.

CHANNEL FEATURES

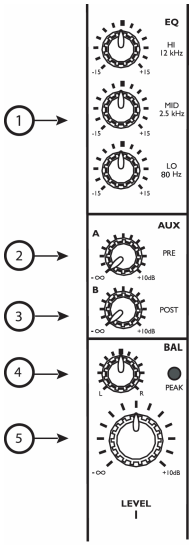

Channel Strip

1. **EQ:** Boosts or cuts the respective frequencies for each channel. When recording via USB 2.0, the EQ settings ARE recorded.

2. **AUX A:** Routes channel signal to an external device like an effects processor.

3. **AUX B:** Controls level routed to internal effects processor or – if a device is patched into the Aux B returns – routes channel signal to an external device like an effects processor.

   When recording via USB 2.0, the AUX A and B signals are NOT recorded on the individual channels. They ARE recorded via the MAIN MIX channels.

4. **PAN/BALANCE:** Shifts the balance between the Left and Right inputs.

   When recording via USB 2.0, the MONO channels' pan position is ignored when recording the individual channel but is captured when recording the MAIN MIX channels. The STEREO channels' balance is captured by both the individual channel and the MAIN MIX channels.

5. **CHANNEL FADER:** Controls the MAIN OUT (analog) and USB 2.0 (digital) signal level of the MIC or LINE inputs.

MASTER FEATURES

Note: It is recommended that the MULTIMIX USB 2.0 be turned off before connecting and disconnecting any sources to the inputs of the unit. However, do not turn off the MultiMix USB 2.0 once you have established a connection to the computer.

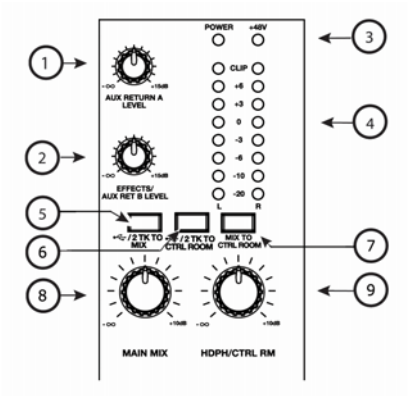

1. **AUX RETURN A:** Controls the signal level that returns from AUX A.

2. **EFFECTS/AUX RET B:** Controls the signal level of the internal effects or the level returning from AUX B if in use.

3. **+48V LED:** Indicates that the PHANTOM POWER is enabled for the MIC inputs.

4. **LED METERS:** Monitors the audio signal level.

5. **USB/2TK TO MIX:** Routes the stereo return from the computer as well as the 2TK input to the MAIN faders.

6. **USB/2TK TO CTRL ROOM:** Routes the stereo return from the computer as well as the 2TK input to the HDPH /CTRL RM output.

7. **MIX TO CTRL ROOM:** Routes the MAIN MIX to the HDPH /CTRL RM output.

8. **MAIN MIX:** Controls the level of the MAIN OUTPUTS.

9. **HDPH/CTRL RM:** Controls the level that is sent to the PHONES or CTRL RM outputs.

RECORDING VIA USB 2.0

FEATURES OF MULTIMIX USB 2.0 RECORDING

The MultiMix USB2.0 allows you to record every individual channel to the computer, along with the main mix. The recorded signal is post-Gain, post-EQ and post-fader, which means that the settings you make to these controls will affect the recorded signal.

Additionally, the balance set for the stereo channels will affect the recording. Note that, if you only plug a source into the LEFT input of one of the stereo channels, this source will be duplicated to the right channel.

You can record at one of four different sample rates—44.1kHz, 48kHz, 88.2kHz, and 96kHz.

A stereo return comes back from your computer to the mixer. Listen to this stereo signal by routing it using the USB/2TK buttons in the master section.

INSTALL THE SOFTWARE ON YOUR COMPUTER

If your computer has access to the Internet, point your browser to the Support/Downloads section of http://www.alesis.com. It's possible that updated drivers have been posted there since the time the software DVD included with your MultiMix was manufactured.

Windows
Before attaching your mixer to your computer, install the drivers either from the website or the software DVD. During the installation process, attach and re-attach your mixer as prompted by the install program.

For each of the several installations that occur, click "Continue Anyway" if Windows warns you that the drivers have not passed Microsoft Logo Certification.

Windows Logo Certification warning.
Ignore this warning by clicking "Continue Anyway."

Macintosh
Install the driver from the .dmg file.

Wait to turn on/attach your MultiMix USB2.0 mixer to your Mac until after the Mac has fully booted. If you do not do so, your computer may not recognize the device.

You must select the "Alesis USB Audio Device" via your Mac's "Audio MIDI Setup" utility in order for your computer to route the MultiMix USB2.0's signals into and out of your computer applications properly.

CONNECT THE MULTIMIX USB 2.0 TO THE COMPUTER

- Connect your microphones and line-level sources to the MultiMix USB 2.0
- Connect your output devices - headphones or speakers, or both - to the MultiMix USB 2.0. Turn their volume down to zero
- Turn on the MultiMix USB 2.0
- Connect the USB 2.0 cable to both the MultiMix USB 2.0 and your computer
- Turn your computer on

NOTE: If your computer "hangs" when following this procedure, turn off both the mixer and the computer. Try turning on the computer first. Turn on the MultiMix USB 2.0 only after your computer has completely booted up.

START YOUR COMPUTER'S AUDIO RECORDING APPLICATION

- Within the recording application, select the MultiMix USB 2.0 as the recording and playback device
- Adjust the MultiMix USB 2.0's sample rate and buffer sizes as appropriate
- Assign one or more MultiMix USB 2.0 inputs and begin recording
- Raise or lower the trim knobs and volume sliders on the MultiMix USB 2.0 to achieve a strong signal which does not distort (clip)
- Use the equalizer to sculpt the sound
- To record the signal along with the built-in effects or AUX bus effects, record the master fader signal. Individual channel signals include EQ but do not include effects
- On the MultiMix USB 2.0, assign the "2-TK" output from the computer to the monitor mix
- Raise the monitoring level (headphones or monitor speakers) on the MultiMix USB 2.0 to listen back

See the Reference Manual for additional details.

MINIMUM COMPUTER REQUIREMENTS

Minimum PC Requirements:

- Pentium 4, 2.4GHz Processor (or equivalent, such as any Intel Centrino notebook computer)
- 512 MB RAM
- Available USB 2.0 Port
  (2 tracks in and out at 44.1kHz/48kHz with USB 1.1 port)
- Windows XP (with Service Pack 2 or higher installed) or Vista (32-bit)
- 5400 RPM or faster hard drive recommended for multitrack audio

Minimum Macintosh Requirements:

- G5 with native USB 2.0 support
  (2 tracks in and out at 44.1kHz/48kHz with USB 1.1 port)
- Mac OS X version 10.4 or later
- 512 MB RAM
- 5400 RPM or faster hard drive recommended for multitrack audio

ALESIS

MultiMixUSB 2.0

MULTICHANNEL MIXER/AUDIO INTERFACE

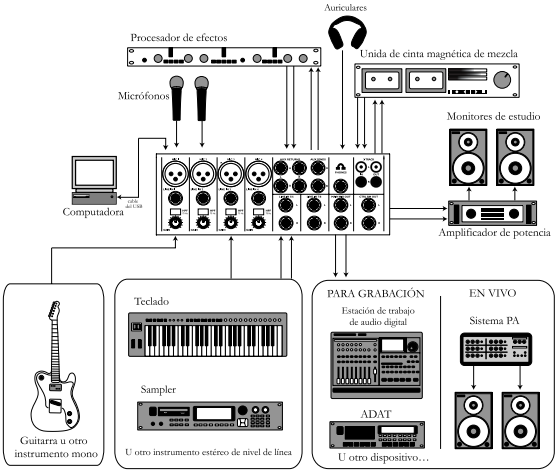

MANUAL DE INICIO RÁPIDO PARA EL MULTIMIX USB 2.0

(ESPAÑOL)

1. Asegúrese de que todos los artículos incluidos al inicio de este manual están incluidos en la caja.
2. **LEA EL FOLLETO DE INSTRUCCIONES DE SEGURIDAD ANTES DE UTILIZAR EL PRODUCTO.**
3. Estudie este diagrama de instalación.
4. Coloque el MultiMix USB 2.0 en una posición adecuada para su funcionamiento.
5. Asegúrese de que todos los dispositivos estén apagados y de que todos los volúmenes estén a «cero».
6. Conecte todas las fuentes de entrada como se indica en el diagrama.
7. Conecte las salidas a los amplificadores de alimentación, unidades de cinta magnética, y/o fuentes de audio.
8. Conecte el cable USB 2.0 a una computadora.
9. Enchufe su MultiMix y otros dispositivos a la potencia de corriente alterna.
10. Prenda todo en el siguiente orden:
    - Fuentes de entrada de audio
    - Efectos externos, dispositivos de grabación o ecualizadores
    - El MultiMix USB 2.0
    - Por último, cualquier amplificador
    - Computadora
11. Al apagar, realice siempre esta operación al contrario:
    - Apagar las computadoras
    - Apague los amplificadores
    - El MultiMix USB 2.0
    - Efectos externos, dispositivos de grabación o ecualizadores
    - Finalmente, cualquier dispositivo de entrada
12. Visite http://www.alesis.com/ para registrar el producto.

CARACTERÍSTICAS DE CANAL

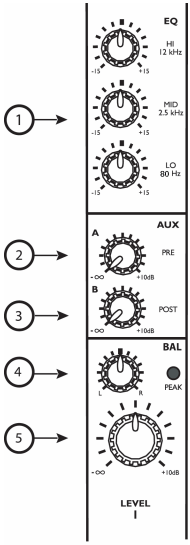

BANDA DEL CANAL

1. **EQ:** Aumenta o corta las frecuencias respectivas para cada canal. Cuando grabe mediante USB 2.0, se GRABAN los parámetros de ecualización.
2. **AUX A:** Dirige la señal del canal a un dispositivo externo como, por ejemplo, un procesador de efectos.
3. **AUX B:** Controla el nivel dirigido al procesador de efectos internos o dirige la señal del canal hacia un dispositivo externo como un procesador de efectos.

   Cuando se graba mediante USB 2.0, las señales AUX A y B NO SE GRABAN en los canales individuales. Se GRABAN a través de los canales de mezcla principal MAIN MIX.

4. **PAN/BALANCE:** Desplaza el balance entre las entradas izquierda y derecha.

   Cuando se graba mediante USB 2.0, se ignora la posición de pan al gravar el canal individual pero se captura al grabar los canales MAIN MIX. El balance de los canales ESTÉREO es capturado tanto por el canal individual como por los canales MAIN MIX.

5. **CHANNEL FADER:** Controla el nivel de señal MAIN OUT (analógica) y USB 2.0 (digital) de las entradas de micrófono (MIC) y línea (LINE).

CARACTERÍSTICAS PRINCIPALES

Nota: Es recomendable que se apague el MULTIMIX antes de conectar y desconectar cualquier fuente a las entradas de la unidad. No obstante, no apague el MultiMix USB 2.0 una vez que haya establecido una conexión a la computadora.

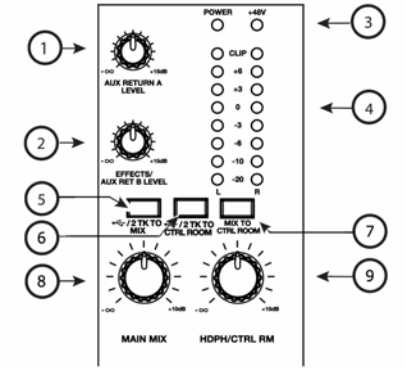

SECCIÓN DEL MASTER

1. **AUX RETURN A (Retorno de aux A.):** Controla el nivel de señal que vuelve de las entradas auxiliares.

2. **EFFECTS/AUX RETURN B (Effectos/Retorno de aux.):** Controla el nivel de señal que vuelve de las entradas auxiliares o controla el nivel dirigido al procesador de efectos internos.

3. **+48V LED:** Indica que la potencia fantasma [PHANTOM POWER] está activada para las entradas de MIC (micrófono).

4. **LED METERS (medidores LED):** Monitorea el nivel de señal de audio.

5. **USB/2TK TO MIX (2 pistas a mezcla):** Dirige la entrada 2TK así como el retorno estéreo de la computadora a los faders principales (MAIN).

6. **USB/2TK TO CTRL ROOM (2 pistas a control):** Dirige la entrada 2TK así como el retorno estéreo de la computadora a la salida HDPH / CRTL RM (auriculares / sala de control).

7. **MIX TO CTRL ROOM:** Dirige la MEZCLA PRINCIPAL a la salida HDPH /CTRL RM (Auriculares/sala de control).

8. **MAIN MIX (mezcla principal):** Controla el nivel de las salidas principales MAIN OUTPUTS.

9. **HDPH/CTRL RM:** Controla el nivel enviado a las salidas de PHONES o CTRL RM.

GRABACIÓN MEDIANTE USB 2.0

CARACTERÍSTICAS DE LA GRABACIÓN CON MULTIMIX USB 2.0

El MultiMix USB2.0 le permite grabar todos los canales individuales en la computadora, junto con la mezcla principal. La señal grabada es post-ganancia, post-ecualización y post-fader, lo que significa que los ajustes que haga a estos controles afectan a la señal grabada.

Adicionalmente, el balance ajustado para los canales estéreo también afecta a la grabación. Tenga en cuenta que si sólo enchufa una fuente a la entrada IZQUIERDA de uno de los canales estéreo, esta fuente se duplicará en el canal derecho.

Puede grabar a una de cuatro frecuencias de muestreo diferentes: 44.1 kHz, 48 kHz, 88.2 kHz y 96 kHz.

Vuelve un retorno estéreo de la computadora al mezclador. Escuche esta señal estéreo dirigiéndola mediante los botones USB/2TK de la sección maestra.

INSTALE EL SOFTWARE EN LA COMPUTADORA

Si su computadora tiene acceso a Internet, apunte su navegador a la sección Support > Downloads (Soporte > Descargas) de http://www.alesis.com. Es posible que se hayan colocado allí drivers actualizados desde que se imprimió el DVD de software incluido con su MultiMix.

Windows
Antes de conectar el mezclador a la computadora, instale los drivers, ya sea desde el sitio web o desde el DVD de software. Durante el proceso de instalación, conecte y vuelva a conectar el mezclador según lo indique el programa.

Continúe instalando los diferentes juegos de drivers hasta que reciba un mensaje diciendo " Your new hardware is installed and ready to use."

Aviso de certificación de Windows.
Ignore el aviso señalando "Continue Anyway."

Macintosh
Instale el driver desde el archivo .dmg.

Para encender y conectar el mezclador MultiMix USB2.0 a la Mac, espere a que ésta haya arrancado totalmente. Si no procede de esta forma, la computadora puede no reconocer el dispositivo.

Debe seleccionar "Alesis USB Audio Device" (Dispositivo de audio USB Alesis) mediante la utilidad "Audio MIDI Setup" (Configuración MIDI de audio) de su Mac a fin de dirigir correctamente las señales del MultiMix USB2.0 desde y hacia su computadora.

CONECTE MULTIMIX USB 2.0 A LA COMPUTADORA

- Conecte los micrófonos y fuentes de nivel de línea al MultiMix USB 2.0
- Conecte los dispositivos de salida —auriculares, altavoces o ambos— al MultiMix USB 2.0. Ajuste el volumen de los mismos a cero
- Encienda el MultiMix USB 2.0
- Conecte el cable USB 2.0 tanto al MultiMix USB 2.0 como a la computadora
- Encienda la computadora

NOTA: Si la computadora "se cuelga" cuando sigue este procedimiento, apague el mezclador y la computadora. Pruebe encender la computadora primero. Encienda el MultiMix USB 2.0 sólo después de que haya arrancado completamente la computadora.

ARRANQUE LA APLICACIÓN DE GRABACIÓN DE AUDIO DE LA COMPUTADORA

- Dentro de la aplicación de grabación, seleccione MultiMix USB 2.0 como dispositivo de grabación y reproducción
- Ajuste la frecuencia de muestreo del MultiMix USB 2.0 y los tamaños de buffer apropiados
- Asigne una o más entradas de MultiMix USB 2.0 y comience a grabar
- Suba o baje las perillas de recorte y los cursores de volumen del MultiMix USB 2.0 para lograr una señal fuerte que no se distorsione (recorte)
- Use el ecualizador para esculpir el sonido
- Para registrar la señal junto con los efectos incorporados o los efectos del bus AUX, grabe la señal del fader maestro. Las señales de canales individuales incluyen la ecualización pero no los efectos
- En el MultiMix USB 2.0, asigne la salida "2-TK" de la computadora a la mezcla del monitor
- Eleve el nivel de monitoreo (auriculares o altavoces monitores) del MultiMix USB 2.0 para escuchar el sonido

Requisitos de computadora

Requisitos mínimos de PC:

- Procesador Pentium 4, 2.4GHz o Centrino (o el equivalente)
- 512 MB de RAM
- Puerto USB 2.0 disponible
- Windows XP (con Service Pack 2 instalado) o Vista (32 bit)

Requisitos mínimos de Macintosh:

- G5 con soporte de USB 2.0 nativo
- Mac OS X versión 10.4 o posterior
- 512 MB de RAM

ALESIS

MultiMixUSB 2.0

MULTICHANNEL MIXER/AUDIO INTERFACE

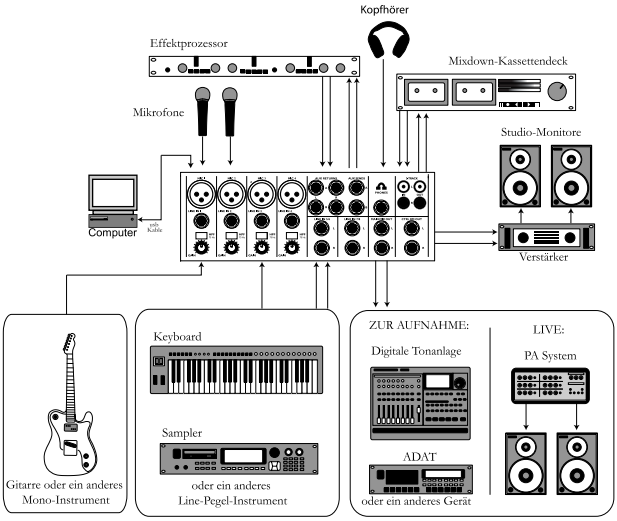

MULTIMIX USB 2.0 KURZBEDIENUNGSANLEITUNG *(DEUTSCH)*

1. Überprüfen Sie, daß alle auf der Vorderseite dieser Anleitung aufgeführten Teile in der Verpackung enthalten sind.
2. **LESEN SIE DIE SICHERHEITSHINWEISE BEVOR SIE DAS PRODUKT BENUTZEN.**
3. Sehen Sie sich dieses Aufbauschema genau an.
4. Stellen Sie den MultiMix USB 2.0 an eine für den Betrieb geeignete Stelle.
5. Stellen Sie sicher, daß alle Geräte ausgeschaltet sind und alle Lautstärkenregler auf “0” stehen.
6. Schließen Sie alle Signalquellen wie im Aufbauschema gezeigt an.
7. Schließen Sie die Ausgänge an die Verstärker, Kassettendecks und/oder Tonquellen an.
8. Schließen Sie das USB 2.0 Kabel an den Computer an.
9. Schließen Sie Ihren MultiMix und die anderen Geräte an eine Wechselstromquelle an.
10. Schalten Sie alles in der folgenden Reihenfolge an:
    - Signalquellen
    - externe Effekte, Aufnahmegeräte oder Klangregler
    - den MultiMix USB 2.0
    - zuletzt, vorhandene Verstärker
    - Computer
11. Beim Ausschalten drehen Sie diese Reihenfolge um, indem Sie:
    - Schalten Sie den Computer aus
    - die Verstärker
    - den MultiMix USB 2.0
    - externe Effekte, Aufnahmegeräte oder Klangregler
    - zuletzt vorhandene Signalquellen ausschalten
12. Besuchen Sie die Webseite http://www.alesis.com/ um das Produkt zu registrieren.

BEDIENELEMENTE KANAL

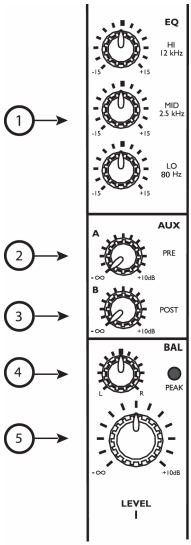

KANALLAUF

1. **EQ:** Verstärkt oder verringert die entsprechenden Frequenzen für jeden Kanal. Bei der Aufnahme über USB 2.0 werden die EQ Einstellungen AUCH aufgenommen.
2. **AUX A:** Steuert den Pegel, welcher leitet das Signal des Kanals an ein externes Gerät wie z. B. einen Effektprozessor.
3. **AUX B:** Steuert den Pegel, welcher an den internen Effektprozessor gesandt wird oder leitet das Signal des Kanals an ein externes Gerät wie z. B. einen Effektprozessor.

   Bei der Aufnahme über USB 2.0 werden die AUX A und B Signale der einzelnen Kanäle NICHT mit aufgenommen. Diese werden jedoch über die MAIN MIX Kanäle aufgezeichnet.

4. **PAN/BALANCE:** Verändert die Balance zwischen dem linken und rechten Eingang.

   Bei der Aufnahme über USB 2.0, werden die Positionen des Panoramareglers der MONO-Kanäle ignoriert, wenn einzelne Kanäle aufgezeichnet werden, aber aufgenommen, wenn die MAIN MIX Kanäle aufgenommen werden. Die Balance-Einstellungen der STEREO Kanäle werden sowohl über die Einzelkanäle als auch über die MAIN MIX Kanäle aufgezeichnet.

5. **KANAL FADER:** Steuert die Signalpegel der MAIN OUT (Analog) und USB 2.0 (Digital) der MIC oder LINE Eingänge.

BEDIENELEMENTE MASTER

Hinweis: Es wird empfohlen, den MULTIMIX vor dem Ein- oder Ausstecken jeglicher Quellen an den Eingängen des Geräts, auszuschalten. Schalten Sie auf keinen Fall nicht den MultiMix USB 2.0 aus, nachdem Sie eine Verbindung zum Computer hergestellt haben.

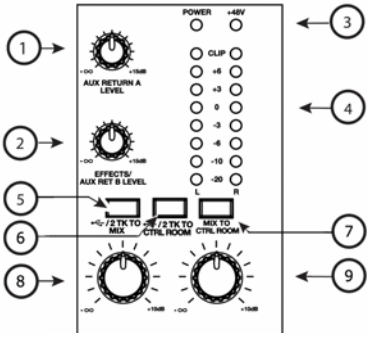

MASTERBEREICH

1. **AUX RETURN A:** Steuert den Signalpegel, welcher von den AUX A- Eingängen zurückkommt.

2 **EFFECTS/AUX RET B:** Steuert den Signalpegel, welcher von den AUX B- Eingängen zurückkommt oder von die internen Effektprozessor.

3. **+48V LED:** Zeigt an, daß PHANTOMSPEISUNG für die MIC-Eingänge eingeschaltet ist.

4. **LED METERS:** Überwachen den Tonsignalpegel.

5. **USB/2TK TO MIX:** Führt den 2TK Eingang und das Stereosignal vom Computer zu den MAIN Fadern.

6. **USB/2TK TO CTRL ROOM:** Routet den 2TK Eingang und das Stereosignal vom Computer zum HDPH /CTRL RM Ausgang.

7. **MIX TO CTRL ROOM:** Führt den MAIN MIX zum HDPH /CTRL RM Ausgang.

8. **MAIN MIX:** Steuert den Pegel der MAIN-AUSGÄNGE.

9. **HDPH/CTRL RM:** Steuert den Pegel, welcher zu den Ausgängen PHONES oder CTRL RM gesandt wird.

AUFNAHMEN MIT USB 2.0

EIGENSCHAFTEN DES MULTIMIX USB 2.0

Mit dem MultiMix USB2.0 können Sie, zusammen mit dem Main Mix, jeden einzelnen Kanal auf dem Computer aufnehmen. Das Signal wird hinter dem Gain, EQ und Kanalfader abgegriffen, was bedeutet, dass Sie diese Regler zur Manipulation des Aufnahmesignals verwenden können.

Zusätzlich dazu beeinflusst auch die eingestellte Balance bei Stereokanälen die Aufnahme. Beachten Sie dabei, dass ein Signal, welches nur an den linken Eingang eines Stereokanals angeschlossen ist, auf den rechten Kanal dupliziert wird.

Zur Aufnahme stehen vier verschiedene Sample Rates zur Verfügung - 44.1kHz, 48kHz, 88.2kHz, sowie 96kHz.

Vom Computer wird ein Stereosignal zum Mixer zurückgeführt. Dieses Stereosignal hören Sie, wenn Sie das Signal mit den USB/2TK Tasten in der Master Sektion des Mixers zum gewünschten Ziel routen.

INSTALLATION DER SOFTWARE AUF IHREM COMPUTER

Falls Ihr Computer mit dem Internet verbunden ist, gehen Sie in den Support/Downloads Bereich der Webseite http://www.alesis.de. Es kann möglich sein, dass seit Produktion der Software DVD, die Ihrem MultiMix beiliegt, ein aktualisierter Treiber veröffentlicht wurde, den Sie hier herunterladen können.

Windows
Vor dem Anschluss des Mixers an den Computer, installieren Sie entweder die Treiber von der Webseite oder der Software DVD. Während des Installationsvorgangs, werden Sie vom Installationsprogramm aufgefordert, den Mixer anzuschließen und die Verbindung wieder zu trennen.

Nachdem Sie sich für eine der beiden Möglichkeiten entschieden haben, klicken „Fortfahren," falls Windows Sie warnt, dass die Treiber die Microsoft Logo Zertifizierung nicht bestanden haben.

Windows Logo Zertifizierungswarnung.
Ignorieren Sie diesen Hinweis durch Klicken des „Fortfahren" Buttons.

Macintosh
Installieren Sie die Treiber aus der .dmg Datei.

Stellen Sie die Verbindung zwischen Ihrem MultiMix USB2.0 Mixer und Ihrem Mac erst her, nachdem das System vollständig hochgefahren wurde. Anderenfalls kann es passieren, dass Ihr Computer den Mixer nicht erkennt.

Sie müssen das "Alesis USB Audio Device" in der "Audio-MIDI-Konfiguration" Ihres Macs auswählen, damit der Computer die Signale des MultiMix USB2.0 richtig zu oder von Ihrem Audioprogramm routen kann.

ANSCHLUSS DES MULTIMIX USB 2.0 AN DEN COMPUTER

- Schließen Sie Ihre Mikrofone und Line Pegel Geräte mit dem MultiMix USB 2.0
- Schließen Sie Ihren Kopfhörer und Ihre Studiomonitore an den MultiMix USB 2.0 an. Drehen Sie deren Lautstärken auf Null
- Schalten Sie den MultiMix USB 2.0 ein
- Verbinden Sie den Multi Mix USB 2.0 mit einem USB 2.0 Kabel mit dem Computer
- Starten Sie Ihren Computer

BEACHTEN SIE: Sollte sich Ihr Computer bei dieser Vorgehensweise aufhängen, schalten Sie Computer und Mixer aus. Fahren Sie nun zuerst den Computer hoch. Nehmen Sie den MultiMix USB 2.0 erst in Betrieb, nachdem der Computer vollständig gebootet wurde.

ÖFFNEN SIE DIE AUDIO RECORDING SOFTWARE

- Wählen Sie in der Recording Software den MultiMix USB 2.0 als Aufnahme- und Wiedergabegerät aus
- Stellen Sie die Sample Rate und wenn nötig die Buffer-Größe des MultiMix USB 2.0 ein
- Weisen Sie den Kanälen einen oder mehrere MultiMix USB 2.0 Eingänge zu und starten Sie die Aufnahme
- Erhöhen oder verringern Sie den Kanalpegel mit Hilfe der Trim Regler und des Kanalfaders am MultiMix USB 2.0, damit Sie ein gut ausgesteuertes Signal ohne Übersteuerungen bekommen
- Verwenden Sie den Equalizer, um die Soundfrequenzen abzustimmen
- Damit Sie das Signal zusammen mit den integrierten Effekten oder den AUX Bus Effekten aufnehmen können, müssen Sie das Signal des Master Faders auswählen. Die Signale einzelner Kanalzüge enthalten zwar die EQ-Bearbeitung, jedoch werden die Effekte ignoriert
- Routen Sie am MultiMix USB 2.0 den "2-TK" Ausgang vom Computer zum Monitormix
- Erhöhen Sie zum Abhören die Abhörlautstärke (Kopfhörer oder Monitore) am MultiMix USB 2.0

Systemanforderungen

Mindestanforderungen an PCs:

- Pentium 4, 2.4GHz Prozessor oder Centrino (oder gegenwert)
- 512 MB RAM
- Freier USB 2.0 Port
- Windows XP (mit installiertem Service Pack 2) oder Vista (32 bit)

Mindestanforderungen an Macintosh Computer:

- G5 Computer mit nativer USB 2.0 Unterstützung
- Mac OS X Version 10.4 oder aktueller
- 512 MB RAM

ALESIS

MultiMixUSB 2.0

MULTICHANNEL MIXER/AUDIO INTERFACE

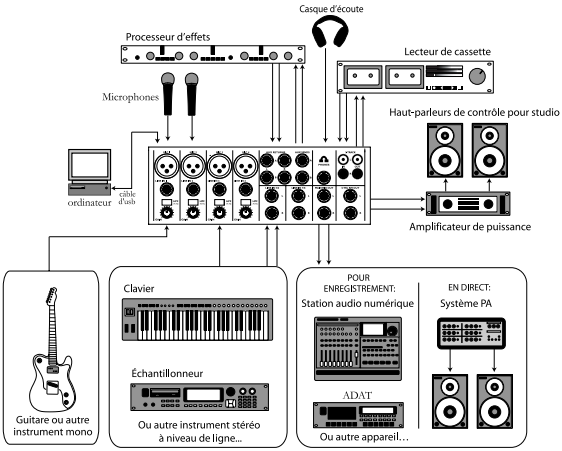

GUIDE D'UTILISATION SIMPLIFIÉ POUR LE MULTIMIX USB 2.0

(FRANÇAIS)

1. Assurez-vous que tous les articles énumérés sur la page couverture de ce guide sont inclus dans la boîte.
2. **LIRE LE LIVRET DES CONSIGNES DE SÉCURITÉ AVANT D'UTILISER LE PRODUIT.**
3. Examinez bien le schéma d'installation.
4. Placez le MultiMix USB 2.0 en position de fonctionnement.
5. Assurez-vous que tous les appareils sont hors tension et que tous les niveaux sont réglés à « zéro ».
6. Connectez toutes les sources tel qu'indiqué sur le schéma.
7. Brancher toutes les sorties aux amplificateurs de puissance, aux lecteurs de cassette et/ou aux sources audio.
8. Branchez le câble USB 2.0 à un ordinateur.
9. Branchez le MultiMix et autres appareils à une prise d'alimentation CA..
10. Mettre tous les appareils sous tension dans l'ordre suivant :
    - Source d'entrée audio
    - Appareils d'effets externe, d'enregistrement ou égalisateurs
    - Le MultiMix USB 2.0
    - En dernier, tous les amplificateurs
    - Ordinateur
11. Pour mettre hors tension, toujours inverser l'opération :
    - Mettre les ordinateurs hors tension
    - Éteindre les amplificateurs
    - Le MultiMix USB 2.0
    - Appareils d'effets externe, d'enregistrement ou égalisateurs
    - En dernier, tous les appareils d'entrée
12. Allez à http://www.alesis.com/ pour enregistrer le produit.

CARACTÉRISTIQUES DES CANAUX

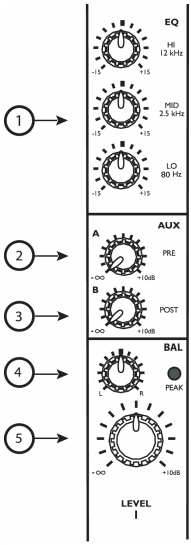

SECTION CANAUX

1. **Égalisation (EQ) :** Augmente ou coupe les fréquences respectives pour chaque canal. Lorsque l'enregistrement se fait via le USB 2.0, les réglages d'égalisation SONT enregistrés.
2. **AUX A :** Permet de régler le niveau acheminé au processeur d'effets externe.
3. **AUX B :** Permet de régler le niveau acheminé au processeur d'effets externe ou d'acheminer le signal du canal à un appareil externe tel qu'un processeur d'effets.
   Lorsque l'enregistrement se fait via le USB 2.0, les signaux AUX A et B ne sont PAS enregistrés sur les canaux individuels. Par contre, ils SONT enregistrés sur les canaux du mix général (MAIN MIX).

4. **PAN/BALANCE :** Permet de modifier l'équilibre entre les signaux de droite et de gauche.

   Lorsque l'enregistrement se fait via le USB 2.0, la position panoramique des canaux MONO est ignorée lorsque le canal est enregistré, mais est saisie lorsque les canaux du mix général (MAIN MIX) sont enregistrés. La balance des canaux stéréo est saisie par le canal individuel ainsi que par les canaux du mix général (MAIN MIX).

5. **ATTÉNUATEUR DE CANAL (CHANNEL FADER) :** Permet de régler le niveau du signal de sortie analogue principale (MAIN OUT) et USB 2.0 (numérique) des entrées microphone (MIC) ou de ligne (LINE).

CARACTÉRISTIQUES PRINCIPALES

Note : Nous vous recommandons de mettre le MULTIMIX hors tension avant d'effectuer le branchement ou le débranchement de toutes sources aux entrées de l'apparei. Cependant, n'éteignez pas le MultiMix USB 2.0 une fois la connexion à un ordinateur établit.

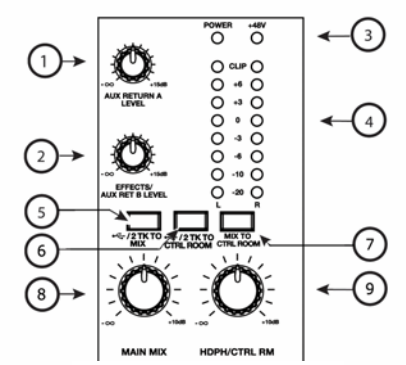

SECTION PRINCIPALE

1. **Auxiliaire de retour A (AUX RETURN A) :** Permet de régler le niveau du signal de retour provenant des entrées auxiliaires (Aux A).

2. **Auxiliaire de retour B (AUX RETURN B) :** Permet de régler le niveau du signal de retour provenant des entrées auxiliaires (Aux B) ou des processeur d'effets internal.

3. **Témoin DEL +48 V :** Indique que la fonction de puissance PHANTOM est activée pour les entrées microphones.

4. **VU-MÈTRES :** Permet de surveiller le niveau du signal audio.

5. **USB/2TK AU MIX :** Permet d'acheminer l'entrée 2TK ainsi que le signal stéréo de l'ordinateur aux atténuateurs généraux (MAIN).

6. **USB/2TK AU CTRL ROOM:** Permet d'acheminer l'entrée 2TK ainsi que le signal stéréo de l'ordinateur à la sortie HDPH /CTRL RM.

7. **MIX TO CTRL ROOM:** Achemine le mix principal à la sortie HDPH/CTRL RM.

8. **MIX PRINCIPAL (MAIN MIX) :** Permet de régler le niveau des sorties principales (MAIN OUTPUTS).

9 **HDPH/CTRL RM :** Permet de régler le niveau acheminé au sorties casque (PHONES) ou CTRL RM.

L'ENREGISTREMENT VIA USB 2.0

CARACTERISTIQUES DE L'ENREGISTREUR MULTIMIX USB 2.0

Le Multimix USB 2.0 vous permet d'enregistrer chaque canal individuel dans l'ordinateur en association au mix principal. Le signal enregistré est post-gain, post-équalisation et post-atténuateur, ce qui signifie que les réglages que vous assignez à ces potentiomètres affecteront le signal enregistré.

Par ailleurs, l'équilibre pour les canaux stéréo affectera l'enregistrement. Veuillez noter que si vous ne connectez qu'une seule source dans l'entrée de gauche d'un des canaux stéréo, cette source sera dupliquée sur le canal de droite.

Vous pouvez effectuer un enregistrement à quatre valeurs d'échantillon possibles : 44.1kHz, 48kHz, 88.2kHz et 96kHz.

Un retour stéréo part de votre ordinateur vers le mixeur. Pour entendre ce signal stéréo, il vous faut l'acheminer en utilisant les boutons USB/2TK dans la section master.

INSTALLATION DU LOGICIEL DANS SUR VOTRE ORDINATEUR

Si votre ordinateur dispose d'un accès Internet, dirigez votre application Internet vers la section support/downloads de l'adresse http://www.alesis.com. Il est possible qu'une mise à jour de votre pilote ait été postée depuis que l'application DVD fournie avec votre Multimix a été manufacturée.

Windows
Avant de connecter votre mixeur à votre ordinateur, installez les pilotes soit à partir du site soit à partir de l'application DVD. Pendant la procédure d'installation, affectez et ré-affectez votre mixeur, comme cela est requis par le programme d'installation.

Pour chacune des multiples installations qui se dérouleront, cliquez sur « Continer de toute façon » si Windows vous indique que les pilotes n'ont pas passé le test Microsoft Logo Certification.

Avertissement Windows Logo Certification
Ignorez cet avertissement en cliquant sur «Continuer de toute façon»

Macintosh
Installez le pilote à partir du fichier .dmg.

Attendez avant d'allumer et d'affecter votre mixeur MultiMix USB2.0 à votre Mac jusqu'à ce que votre Mac soit complètement amorcé. Si vous ne le faites pas, votre ordinateur ne pourra pas reconnaître l'appareil.

Vous devez sélectionner "Alesis USB Audio Device" par le bias de l'utilitaire "Audio MIDI Setup" de votre Mac afin que votre ordinateur achemine correctement le signal du MultiMix USB2.0 dans et hors de vos applications informatique.

BRANCHEZ LE MULTIMIX USB 2.0 À L'ORDINATEUR

- Branchez vos microphones et sources niveau ligne au MultiMix USB 2.0
- Branchez vos dispositifs de sortie : casque d'écoute ou haut parleurs, ou encore les deux, au MultiMix USB 2.0. Mettez tous les niveaux à zéro
- Mettez le MultiMix USB 2.0 sous tension
- Branchez le câble USB 2.0 au MultiMix USB 2.0 et à votre ordinateur
- Mettez l'ordinateur sous tension

REMARQUE: Si votre ordinateur demeure en suspens après avoir suivi la procédure telle qu'indiquée, remettez la console de mixage et l'ordinateur hors tension. Commencez par mettre l'ordinateur sous tension. Ensuite, une fois l'amorçage de votre ordinateur complété, mettez le MultiMix USB 2.0 sous tension.

DÉMARREZ L'APPLICATION D'ENREGISTREMENT AUDIO DE VOTRE ORDINATEUR

- Réglez les paramètres de l'application de sorte que le MultiMix USB 2.0 soit l'appareil d'enregistrement et de lecture
- Réglez la fréquence d'échantillonnage et la taille de la mémoire tampon en conséquence
- Assignez une ou plusieurs entrées du MultiMix USB 2.0 et commencez l'enregistrement
- Vous pouvez augmenter ou diminuer la compensation et le volume à l'aide des réglages et des atténuateurs sur le MultiMix USB 2.0 afin d'obtenir un signal puissant sans écrêtage
- Utilisez l'égalisateur pour façonner votre son
- Pour enregistrer le signal avec les effets intégrés ou avec les effets AUX bus, enregistrez le signal de l'atténuateur général. Les signaux des canaux individuels sont dotés d'égalisation, mais ne sont pas dotés d'effets
- Sur le MultiMix USB 2.0, assignez la sortie « 2-TK » de l'ordinateur à la pré écoute du mix général
- Augmentez les niveaux de la pré écoute (casque d'écoute ou haut parleurs) sur le MultiMix USB 2.0 pour faire la lecture

Configuration requise

Configuration minimale requise pour PC :

- Processeur Pentium 4, 2.4 GHz ou Centrino (ou l'équivalent)
- 512 Mo de mémoire vive
- Port USB 2.0 disponible
- Windows XP (Service Pack 2 installé) ou Vista (32 bit)

Configuration minimale requise pour Mac

- G5 Mac avec support USB 2.0
- Mac OS X 10.4 ou supérieure
- 512 Mo de mémoire vive

ALESIS

MultiMixUSB 2.0

MULTICHANNEL MIXER/AUDIO INTERFACE

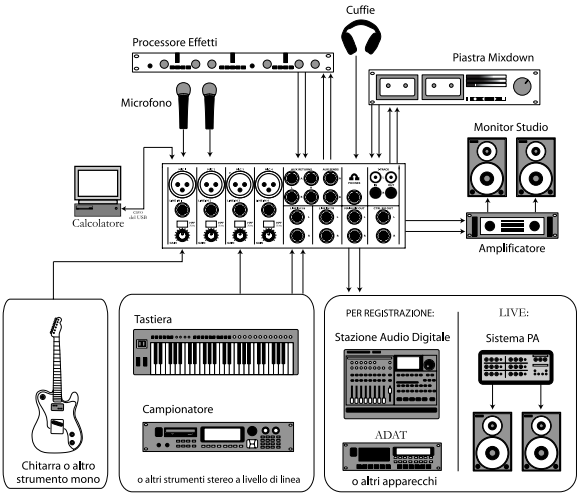

MANUALE RAPIDO DI UTILIZZAZIONE MULTIMIX USB 2.0

(Italiano)

1. Verificate che tutti gli elementi elencati sul frontespizio di questo manuale siano inclusi nella confezione.
2. **PRIMA DI UTILIZZARE IL PRODOTTO LEGGETE IL LIBRETTO DELLE ISTRUZIONI DI SICUREZZA.**
3. Esaminate attentamente lo schema di montaggio.
4. Posizionare il MultiMix USB 2.0 in modo adeguato all'operazione.
5. Assicurarsi che tutti i dispositivi siano spenti e tutti i volumi siano a “zero”.
6. Collegare tutte le sorgenti d'ingresso come indicato nello schema.
7. Collegare le uscite agli amplificatori, piastre di registrazione e/o a sorgenti audio.
8. Collegare il cavo del USB 2.0 ad un computer.
9. Collegare il vostro MultiMix e gli altri dispositivi alla corrente c.a.
10. Accendere tutto nel seguente ordine:
    - Sorgenti d'ingresso audio
    - Dispositivi di effetti esterni, di registrazione o equalizzatori
    - Il MultiMix USB 2.0
    - per ultimi, tutti gli amplificatori
    - Computer
11. Al momento dello spegnimento invertite sempre questa operazione:
    - Spegnimento dei computer
    - Spegnendo gli amplificatori
    - Il MultiMix USB 2.0
    - I dispositivi di effetti esterni, di registrazione o gli equalizzatori
    - per ultimi, tutti i dispositivi d'ingresso
12. Andare sul sito http://www.alesis.com/ per la registrazione del prodotto.

CARATTERISTICHE CANALE

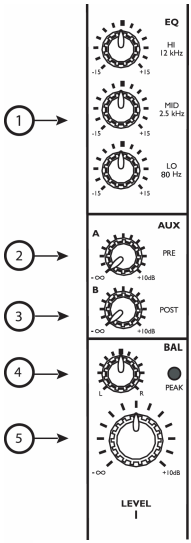

STRISCIA CANALE

1. **EQ:** Aumenta o taglia le rispettive frequenze di ciascun canale. Registrando tramite il USB 2.0, le impostazioni EQ SONO registrate.
2. **AUX A:** Instrada il segnale di canale ad un dispositivo esterno quale un processore di effetti.
3. **AUX B:** Controlla il livello inviato al processore di effetti interno o instrada il segnale di canale ad un dispositivo esterno quale un processore di effetti.

   Registrando tramite il USB 2.0, i segnali AUX A e B NON sono registrati sui singoli canali. Questi SONO registrati tramite i canali MAIN MIX.

4. **PAN/BALANCE:** Commuta l'equilibrio tra gli ingressi sinistro e destro.

   Registrando tramite il USB 2.0, la posizione del pan dei canali MONO viene ignorata al momento di registrare il singolo canale, ma catturata al momento di registrare i canali MAIN MIX. L'equilibrio STEREO dei canali è captato sia dai singoli canali che dai canali MAIN MIX.

5. **CHANNEL FADER:** Controlla il livello di segnale MAIN OUT (analogica) e USB 2.0 (digitale) degli ingressi MIC o LINE.

CARATTERISTICHE MASTER

Attenzione: si raccomanda di spegnere il MULTIMIX prima di collegare o scollegare qualsiasi sorgente agli ingressi dell'apparecchio. Tuttavia, una volta stabilita una connessione con il computer, non spegnere il MultiMix USB 2.0

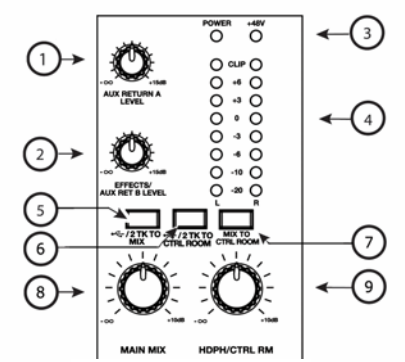

SEZIONE MASTER

1. **AUX RETURN A:** Controlla il livello di segnale che ritorna dagli ingressi AUX A.

2. **AUX RETURN B:** Controlla il livello di segnale che ritorna dagli ingressi AUX B o instrada il segnale di canale ad un dispositivo esterno quale un processore di effetti.

3. **LED +48V:** Indica che il PHANTOM POWER è abilitato per gli ingressi MIC.

4. **MISURATORI A LED:** Monitorizzano il livello di segnale audio.

5. **USB/2TK TO MIX:** Convoglia l'ingresso 2TK e il ritorno stereo dal computer ai fader MAIN.

6. **USB/2TK TO CTRL ROOM:** Convoglia l'ingresso 2TK e il ritorno stereo dal computer all'uscita HDPH /CTRL RM.

7. **MIX TO CTRL ROOM:** Convoglia il MAIN MIX all'uscita HDPH /CTRL RM.

8. **MAIN MIX:** Controlla il livello delle uscite principali (MAIN OUTPUTS).

9. **HDPH/CTRL RM:** Controlla il livello inviato alle uscite PHONES o CTRL RM.

REGISTRARE CON IL USB 2.0

CARATTERISTICHE DI REGISTRAZIONE DEL MULTIMIX USB 2.0

Il MultiMix USB2.0 permette di registrare ogni singolo canale sul computer, insieme al mix principale. Il segnale registrato è post-Gain, post-EQ e post-fader, il che significa che le regolazioni apportate a questi comandi influiranno sul segnale registrato.

Inoltre, la registrazione verrà influenzata dal set di equilibratura per i canali stereo. Va notato che, se si inserisce unicamente una sorgente a livello dell'ingresso SINISTRO di uno dei canali stereo, tale sorgente verrà duplicata sul canale destro.

Si può registrare ad una di quattro frequenze di campionatura—44,1kHz, 48kHz, 88,2kHz, e 96kHz.

Un ritorno stereo proviene dal computer e torna verso il mixer. Ascoltare questo segnale stereo convogliandolo servendosi dei pulsanti USB/2TK nella sezione master.

INSTALLAZIONE DEL SOFTWARE SUL COMPUTER

Se il computer ha accesso a Internet, navigare nella sezione Support/Downloads del sito http://www.alesis.com. È possibile che siano stati caricati driver aggiornati dal momento in cui è stato prodotto il DVD recante il software compreso con il MultiMix.

Windows
Prima di collegare il mixer al computer, installare i driver o dal sito o dal DVD recante il software. Durante il processo d'installazione collegare e ricollegare il mixer come richiesto dal programma di installazione.

Se per alcune delle installazioni che state effettuando, Windows vi avverte che i drivers non hanno passato la Microsoft Logo Certification, cliccate "Continue Anyway."

Windows Logo Certification warning.
Ignorate wuesto avvertimento e cliccate "Continue Anyway."

Macintosh
Installare il driver dal file .dmg.

Attendere, prima di accendere/collegare il mixer MultiMix USB2.0 al Mac, che il Mac stesso abbia caricato completamente. In caso contrario, il computer potrebbe non riconoscere il dispositivo.

Bisogna selezionare "Alesis USB Audio Device" tramite lo strumento "Audio MIDI Setup" del Mac affinché il computer convogli i segnali del MultiMix USB 2.0 da e verso le applicazioni del computer in maniera adeguata.

COLLEGAMENTO DEL MULTIMIX USB 2.0 AL COMPUTER

- Collegare i microfoni e le sorgenti a livello di linea al MultiMix USB 2.0
- Collegare i dispositivi di uscita - cuffie o altoparlanti o entrambi - al MultiMix USB 2.0. Turn their volume down to zero
- Accendere il MultiMix USB 2.0
- Collegare il cavo del USB 2.0 al MultiMix USB 2.0 e al computer
- Accendere il computer

NOTA: se il computer si "imballa" seguendo questa procedura, spegnere sia il mixer che il computer. Provare innanzitutto ad accendere il computer. Accendere il MultiMix USB 2.0 solo dopo che il computer abbia terminato l'operazione di avviamento.

AVVIAMENTO DEL PROGRAMMA DI REGISTRAZIONE AUDIO DEL VOSTRO COMPUTER

- All'interno del programma di registrazione, selezionare il MultiMix USB 2.0 come dispositivo di registrazione e di riproduzione
- Regolare la frequenza di campionatura del MultiMix USB 2.0 e le dimensioni del buffer sizes come necessario
- Assegnare uno o più degli ingressi del MultiMix USB 2.0 e iniziare a registrare
- Alzare o abbassare le manopole di taglio e i cursori del volume sul MultiMix USB 2.0 per ottenere un segnale forte che non subisca distorsione (clip)
- Servirsi dell'equalizzatore per modellare il suono
- Per registrare il segnale contemporaneamente agli effetti incorporati o agli effetti del bus AUX, registrare il segnale del master fader. I segnali dei singoli canali includono l'EQ, ma non gli effetti
- Sul MultiMix USB 2.0, assegnare l'uscita "2-TK" proveniente dal computer al mix del monitor
- Alzare i livelli di monitoraggio (cuffie o altoparlanti di monitoraggio) sul MultiMix USB 2.0 per riascoltare

Requisiti di sistema

Requisiti minimi PC:

- Processore Pentium 4, 2.4GHz o Centrino (o l'equivalente)
- 512 MB RAM
- Porta USB 2.0 disponibile
- Windows XP (con installato Service Pack 2) o Vista (32 bit)

Requisiti minimi Macintosh:

- G5 con supporto nativo USB 2.0
- Mac OS X versione 10.4 o successiva
- 512 MB RAM

Product Data Sheet

UATRS202B

METER SOCKET RINGLESS OH 200A ALUM.ENCL.

List Price	$195.00 USD
Availability	**Non-Stock Item: This item is not normally stocked in our distribution facility.**

Technical Characteristics

Ampere Rating	200A
Approvals	UL Listed
Wire Binding	1/2 Inch Hex
Wiring Configuration	3-Wire
Depth	4.38 Inches
Height	14.00 Inches
Width	8.00 Inches
Closing Plate	ACPA
Box Number	3R
Bypass	None
Hub Opening	Series A
Enclosure Material	Aluminum
Socket Type	Ringless
Ground Wire Size	#14 to #2 AWG (Al/Cu)
Includes	Bonded Neutral
Enclosure Rating	NEMA 3R
Enclosure Type	Rainproof & Ice/Sleet Proof (Indoor/Outdoor)
Jaw Release	No
Line/Load/Neutral Wire Size	#8 to 250 AWG/kcmil (Al/Cu)
Voltage Rating	600VAC
Number of Jaws	4
Number of Sockets	1
Phase	1-Phase
Service Feed Location	OH
Type	Individual

Shipping and Ordering

Category	00039 - Meters, Individual Socket & Hub
Discount Schedule	DE4
GTIN	00785901627777
Package Quantity	1
Weight	7 lbs.
Availability Code	Non-Stock Item: This item is not normally stocked in our distribution facility.
Returnability	N
Country of Origin	US

As standards, specifications, and designs change from time to time, please ask for confirmation of the information given in this document.

Generated: 05/02/2011 18:24:25

© 2011 Schneider Electric. All rights reserved.

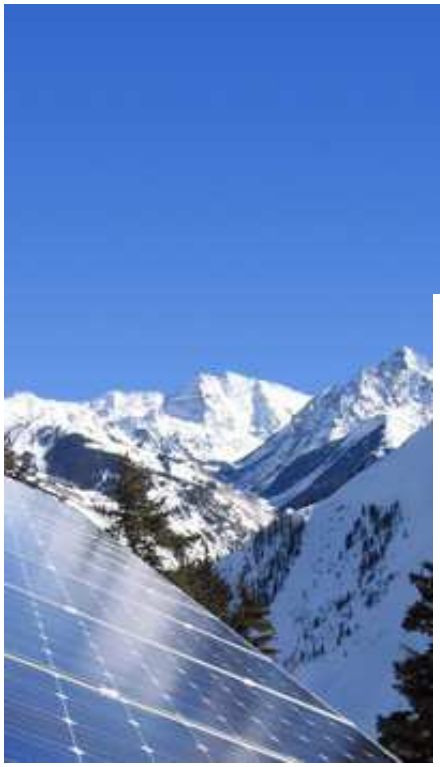

SPS Solar Panel Store
Everything you need to go Solar!

Search

HOME > SPS COMPONENTS > WIRE AND CABLE > MC CABLE > 50 FT MC-4 PV CABLE EXTENSIONS

50 FT MC-4 PV CABLE EXTENSIONS

New locking style MC-4 PV cable 50 ft extension. This may be used to extend one wire 50 feet to another MC connection, or cut in half to extend both positive and negative wires 25 feet to normal wire connections (circuit breaker or bus bar in combiner box for example).

PV Wire 10AWG size.This wire is PV rated, but does not have an extra thick insulation or extra fine stranded wire, so this wire will work with standard cable grips and connector contact sleeves

Need a custom length? Give us a call!

PRODUCT DETAIL:

Availability
Built to Order - 2 Day Lead Time

PRODUCTS

SPS Power Systems:
RV and Marine Systems
Grid-Tie Systems
Off-Grid Systems

SPS Components:
Small Solar Panels
Large Solar Panels
AC Solar Panels
Small Charge Controllers
Large Charge Controllers
Lighting Controllers
Small Inverters
Enphase Micro-Inverters
Fronius Inverters
Magnum Inverters
Outback Inverters
OutBack Parts
Power-One Inverters
SMA Inverters
Xantrex Inverters
Pole and RV Racks
SolarMount Racks
SnapNrack PV Mount
MidNite E-Panels
Electrical Parts
Wire and Cable

INFO
View Cart (0 Items)
About / Contact
Shipping / Policies
Support Forum New!
Colorado Solar Info
Links

FEATURED

MidNite Battery Capacity Meter

Lumos LS185 Black Frame

85W Pre-Wired Remote Power Kit

Tools
Batteries
Efficient Appliances
Clearance Items!

Qty.	Sale Price
1 +	$45.00

Part Num.	Quantity	
COLO-00753	1	Update

ADDITIONAL IMAGES:

Need Help? Try our Support Forum, send an email to info@cosolar.com, or call 970-984-3750 8-4 Mountain Time

Copyright © 2011 Colorado Solar Inc.

MADRIX® NEO –
Quick Start Guide & User Manual

4th Edition, Last Update: March 2011

Thank You for Purchasing MADRIX® NEO

Please read this manual carefully and thoroughly before using the MADRIX® NEO. Make sure that you fully understand all information.

This MADRIX® NEO quick start guide is available in English. The MADRIX® software and its user manuals are also available in English.

Made in Germany

Imprint

inoage GmbH
Fetscherplatz 5
01307 Dresden
Germany

Managing Directors: Christian Hertel, Sebastian Pinzer, Sebastian Wissmann
HR B 29795

http://www.madrix.com
info@madrix.com

Phone +49 351 482 056 30
Fax +49 351 482 056 31

Copyright Information And Disclaimer

© 2011 inoage GmbH. All Rights Reserved.

Information in this manual is subject to change at any time and without prior notice. Reproduction, adaptation, or translation without prior written permission is prohibited.

inoage GmbH does not grant guarantee on validity for a particular reason, the marketability, or other properties of the product. There is no way to assert a claim to inoage GmbH, neither in the legal way nor in other ways. inoage GmbH is not responsible for damages, including all disadvantages that are not just limited to the loss of sales, but that are caused due to the use of the product, due to the loss of serviceability of the product, due to misuse, happenings, circumstances, or actions that inoage GmbH does not have influence on, no matter if the damages as well as consequential damages are direct or indirect; whether they are special damages or others, nor if the damage is caused by the owner of the guarantee or third persons.

Trademark Credits

Microsoft®, Windows® are U.S. registered trademarks of Microsoft Corporation. All other products mentioned herein may be trademarks of their respective companies. MADRIX® is a registered trademark.

Package Contents

1x MADRIX® NEO – DMX512 interface
1x USB cable
1x CD-ROM with MADRIX® – software and driver
1x Quick start guide

Please check the package contents and the interface after unpacking (Please look for broken pins, cracks in the case, or if you can hear loose parts inside the device, etc.)! Contact your supplier if something is missing or damaged. Do not use the device if it seems to be damaged!

Safety Instructions And Warranty

Two years of warranty are granted to the purchaser of this product. Warranty applies to constructional fault, material defect, or incorrect assembly the manufacturer has caused or is to be held responsible for.
Warranty will be void if the interface is opened, modified, damaged through inappropriate handling and wrong usage, damaged through electric current or damaged through any other cause.

Please follow the instructions to avoid mishandling, damage to the device, or personal damage:

It is recommended to always use an opto-isolator/opto-coupler splitter. Avoid voltage on the DMX lines/cables at all times. Do not remove any parts from the unit including the plug ground pin or connect to an ungrounded circuit.

Beware that the interface works with electrical power. Only use the device in dry environments (indoor use). Do not use the interface in humid environments and avoid contact with water or any other liquids. Turn off the power if you are not using the device for a long time.

There are no user serviceable parts inside the interface. Repair service lies only within the responsibilities of the manufacturer. If the interface appears to be defective, please contact your dealer. After expiration of the warranty period, you may contact your supplier or the manufacturer to have the unit repaired against payment of an individual service fee.

The interface has two ports. Only connect devices, cables, and connectors to the USB port and XLR plug using connectors of the same type as the port. Do not use inapplicable equipment.
This device should be operated by professionals. The device is not designed to be used by non-professionals or children.

End-Of-Life

This electrical device needs to be disposed of properly. Do not throw the device into normal trash when the end-of-life has been reached. Please recycle packing material whenever possible.

CE And RoHS Declaration Of Conformity

CE RoHS The device complies with the requirements set forth in the council Directive of the law of the Member States relating to electromagnetic compatibility (2004/108/EC), the Low Voltage Directive (2006/95/EC), and the Directive on restriction of the use of certain hazardous substances in electrical and electronic equipment (2002/95/EC) (RoHS). The compliance with these three Directives has been evaluated in accordance to the following standards: EN 55011 (1998) + A1 (2000) + A2 (2003), EN 55024 (1998) + A1 (2001) + A3 (2003), EN 61000-4-2 (2001), EN 61000-4-3 (2001), EN 61000-4-4 (2001), and EN 61000-4-6 (2001).

FCC Declaration Of Conformity

FC The device has passed the following tests of compliance: FCC (2003) - Title 47, Part 15, class A, Radio frequency devices.

This device complies with part 15 of the FCC Rules. Operation is subject to the following two conditions: (1) This device may not cause harmful interference, and (2) this device must accept any interference received, including interference that may cause undesired operation.

Usage

In general, this device is designed to be operated as a hardware control interface to be set up between a computer and various types of controllable lights via DMX512 (USB-to-DMX). Do not use the interface for any other, deviant purpose.

The device can be connected to and disconnected from the computer during use and without a reboot (Hot Swapping & Plug and Play).
Up to 60 interfaces can be connected to a USB host controller and used at the same time while maintaining a stable and high frame rate (Frame Rate Stability). Active USB 2.0 ports are required in this case.

Technical Details

Power Supply:	5V DC, 500mA, Power over USB
USB:	USB 2.0, type B plug
DMX512:	512 DMX channels input or output
Plug:	5-pin, female, XLR, NEUTRIK
Case:	Metal enclosure
Dimensions:	78 mm x 59 mm x 35 mm (length by width by height)
Weight:	100 g

PLEASE ALWAYS CONNECT EVERY NEO TO AN ACTIVE USB 2.0 PORT OR USE AN USB 2.0 HUB WITH ITS OWN POWER SUPPLY.

System Requirements

Dual-core processor with at least 2.0 GHz, 1024 MB RAM, 200 MB free harddisk space, screen resolution of 1024 x 768, and one free USB 2.0 port. A sound card is optional (required for Sound2Light and Music2Light).

To access the full range of features, it is recommended to install the MADRIX® software provided with the NEO. Software updates are free of charge for the purchaser of this product for MADRIX 2.x versions. The latest MADRIX® software including drivers and the latest quick start guide are available online at http://www.madrix.com

PLEASE INSTALL THE SOFTWARE AND DRIVERS FROM THE CD BEFORE YOU CONNECT THE MADRIX® NEO TO YOUR PC.

Supported Operating Systems

The MADRIX® NEO comes with software and drivers for the following operating systems. The MADRIX® software is officially compatible with Windows® 7. Windows® XP requires Service Pack 1 (SP1).

Microsoft® Windows® XP | Vista | 7
Compatible with 32 bit and 64 bit

1. Installing The Software And Drivers

Insert the CD that comes with the MADRIX® NEO into the CD-ROM drive of your operational computer. The MADRIX® software setup will launch automatically. Follow the on-screen installation instructions as described below.

DO NOT CONNECT THE MADRIX® NEO TO YOUR COMPUTER BEFORE INSTALLING THE SOFTWARE.

Please click 'Next' to start the installation. You may end the process at any time by clicking 'Cancel'.

The 'License Agreement' will appear. It outlines the terms you are agreeing to when you install the software. You must accept these terms in order to continue.

Please click 'I Agree'.

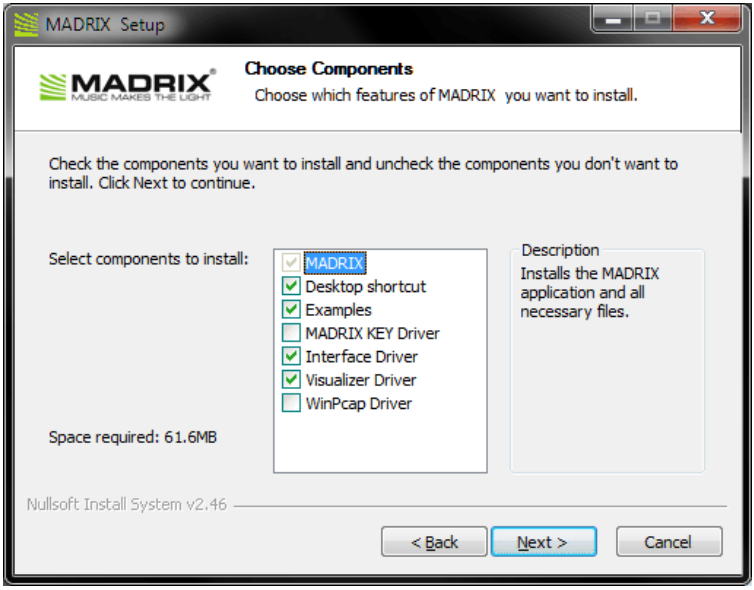

The next window offers the chance to select which components and which drivers you want to install. A description is given for each item. Please make sure to select ‘MADRIX’ and ‘Interface Driver’, which are the most important components for operating the MADRIX® NEO.

Please click 'Next'.

The next section called 'Destination Folder' allows you to select the location on your hard drive where the software will be installed. Please choose a location and then click 'Install'.

The installation process may take a few minutes.

When the 'Complete' window appears, click 'Next'.
Afterwards, click 'Finish' to complete the installation process.

2. Connecting The MADRIX® NEO To Your PC

Now, please use the provided USB cable to connect the MADRIX® NEO to a free USB 2.0 port of your computer.

If the MADRIX® NEO driver has been installed properly, the LED will now fade between red and green. Start the MADRIX® software (if not yet done).

You can check your NEO setup within the MADRIX® software. Go to the menu 'Preferences' → 'Device Manager' and select the tab 'DMX Devices'. Now, press 'Rescan For Devices'. The NEO interface will appear ready in the list.

Using The MADRIX® NEO As DMX-IN Interface

You can use this interface to send or receive DMX data via MADRIX®. If you want to use DMX-IN, please use a Male to Male 3-pin or 5-pin XLR Gender Changer. Then, go to the menu 'Preferences' → 'Device Manager' and select the tab 'DMX Devices'. Select your interface and activate 'Enable' and 'Input' in the 'Settings' section. Press 'Apply'. In the next step, configure your NEO to control MADRIX® remotely under 'Preferences' → 'Device Manager' → 'DMX Input'. Choose an entry in the list (Universe 1 to 8), select your 'DMX-IN Device', and activate 'Remote'. Then, choose one of the input protocols in the section 'Remote Control' and press 'Apply'. Close the window with 'Ok'.

Description Of LED Codes

The following table describes the codes of the status LED.

COLOR	STATUS
red + blinking green	Sending or receiving DMX data. → The interface works correctly.
fading between red + green	Connected to USB; Drivers installed correctly. → The interface works. No DMX data is sent.
orange	Connected to USB; No drivers installed. → Please reinstall software and drivers or try using a different USB port.
red	Hardware ERROR → Please contact your dealer.

3-Pin Or 5-Pin XLR Connector Layout

The images below outline the general pin layout of 5-pin or 3-pin XLR ports.

5-Pin

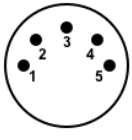

	Description
1	Shield / Ground
2	DMX –
3	DMX +
4	Spare
5	Spare

3-Pin

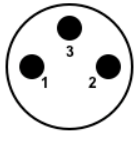

Support And MADRIX® Help And Manual

For more information you can open the MADRIX® Help and Manual (the software user guide) by pressing "F1" on your keyboard while using the MADRIX® software. Separate documentation files are automatically installed with the software as well.

In case of further questions concerning handling of the NEO or technical problems, please read the MADRIX® Help and Manual first, contact your dealer, or have a look at the website: http://www.madrix.com
You can also contact info@madrix.com directly.

Frequently Asked Questions (FAQs)

Do I need a MADRIX® NEO and a MADRIX® KEY?
No. The MADRIX® software license for 512 DMX channels data output is already included. The MADRIX® KEY is not necessary for operating the MADRIX® NEO. However, you may connect both to your computer to use their output features together.

Is it possible to use more than one MADRIX® NEO?
Yes. Up to 60 NEOs can be connected to a USB host controller and used at the same time. Please connect every NEO to an active USB 2.0 port or use an USB 2.0 hub with a power supply.

Does the NEO work in stand-alone mode?
No. The NEO needs to be connected to a personal computer.

Can I use a mobile computer instead of a desktop computer?
Yes. Mobile computers, such as laptops/notebooks, may be used to run the MADRIX® software. Please pay attention to the system requirements.

Can I use other software apart from MADRIX® to control lights?
No. The recommended software is MADRIX®.

Can I use this interface to control lasers, moving heads, or scanners?
No. The software is not designed for such an application.

What does the blinking LED mean?
Please read the chapter “Description Of LED Codes” in this quick start guide.

Can I repair the MADRIX® NEO myself?
No. Do not attempt any repairs. Any attempt will void your warranty! Please contact your dealer if the device seems to be defective.

What can I do if my interface does not work anymore during the warranty period?
Please contact your dealer.

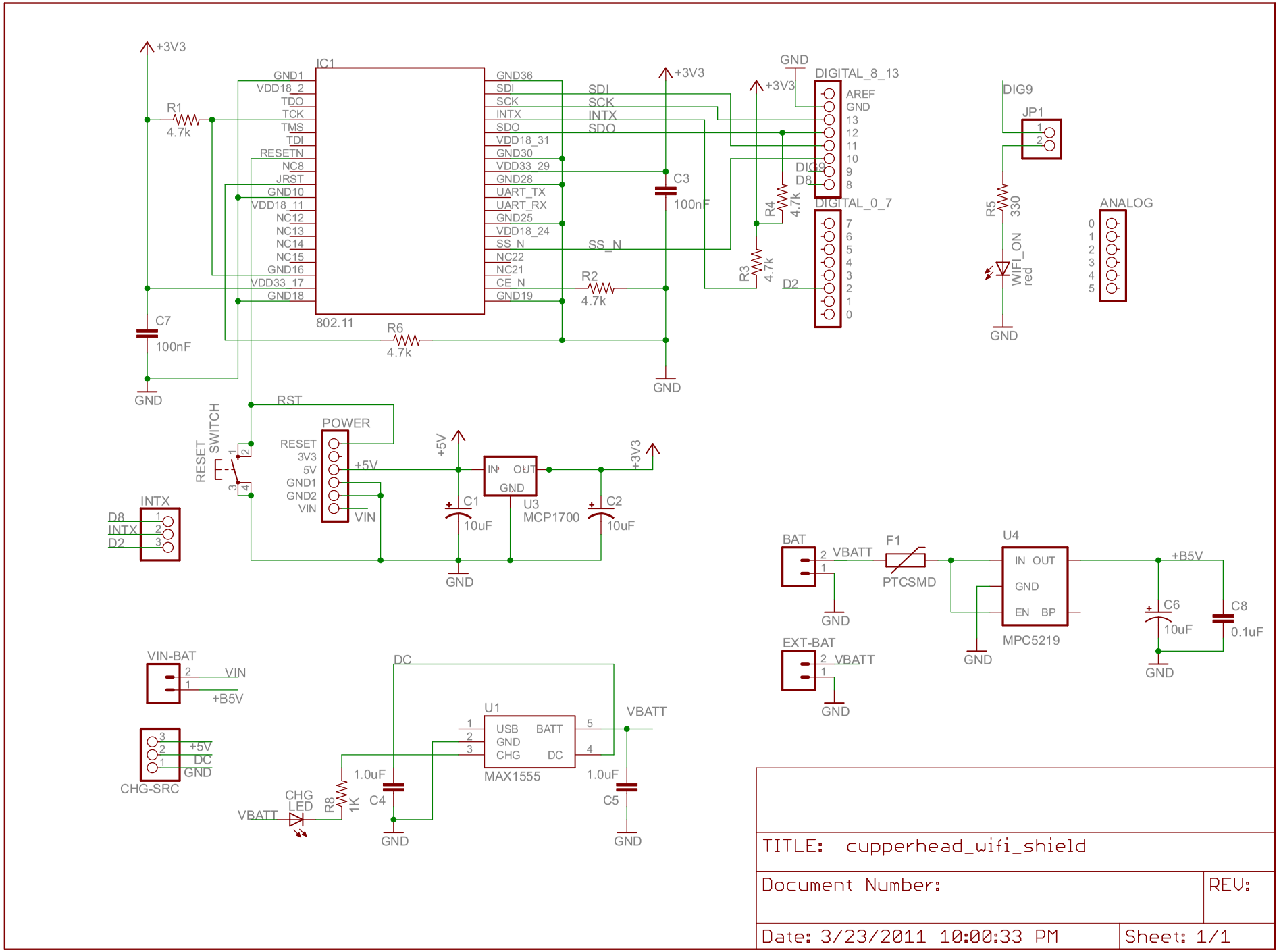
+3V3
R1
4.7k
IC1
GND1
VDD18_2
TDO
TCK
TMS
TDI
RESETN
NC8
JRST
GND10
VDD18_11
NC12
NC13
NC14
NC15
GND16
VDD33_17
GND18
GND36
SDI
SCK
INTX
SDO
VDD18_31
GND30
VDD33_29
GND28
UART_TX
UART_RX
GND25
VDD18_24
SS_N
NC22
NC21
CE_N
GND19
802.11
C7
100nF
GND
R6
4.7k
C3
100nF
R2
4.7k
SS_N
DIGITAL_8_13
AREF
GND
13
12
11
10
9
8
DIGITAL_0_7
7
6
5
4
3
2
1
0
D2
R4
4.7k
R3
4.7k
DIG9
JP1
R5
330
WIFI_ON
red
ANALOG
RST
POWER
RESET
3V3
5V
GND1
GND2
VIN
RESET SWITCH
INTX
D8
D2
+5V
C1
10uF
IN OUT
GND
U3
MCP1700
C2
10uF
BAT
VBATT
F1
PTCSMD
U4
IN OUT
GND
EN BP
MPC5219
+B5V
C6
10uF
C8
0.1uF
EXT-BAT
VIN-BAT
VIN
+B5V
CHG-SRC
DC
U1
USB
BATT
GND
CHG
DC
MAX1555
1.0uF
C4
1.0uF
C5
CHG LED
R8
1K
TITLE: cupperhead_wifi_shield
Document Number:
REV:
Date: 3/23/2011 10:00:33 PM
Sheet: 1/1

GEH-7285

GE kV2c™ Encompass Electronic Meter

Product Description,
Operating Instructions,
Maintenance Instructions,
Upgrading,
Site Analysis Guides,
Diagrams.

Price: $ 30.00

Notice

The information contained in this document is subject to change without notice.

GE makes no warranty of any kind with regard to this material, including, but not limited to, the implied warranties of merchantability and fitness for a particular purpose. GE shall not be liable for errors contained herein or incidental consequential damages in connection with the furnishing, performance, or use of this material.

This document contains proprietary information that is protected by copyright. All rights are reserved. No part of this document may be photocopied or otherwise reproduced without consent of GE.

Copyright (c) 2003 by GE

Published in a limited copyright sense, and all rights, including trade secrets, are reserved.

Document Edition - First 07/2003

Lexan™, MeterMate™, OPTOCOM™, Power Guard™, Site Genie™, Fitzall™, and SMARTCOUPLER™ are trademarks of GE.

FCC COMPLIANCE STATEMENT

This product generates and uses radio frequency energy. It has been tested and verified that it complies with the limits for the Code of Federal Regulations (CFR) 47, Part 15 — Radio Frequency Devices, Subparts A — General and B — Unintentional Radiators issued by the Federal Communications Commission for Class “B” digital devices. If, however, the product causes radio or television interference, notify:

Manager - Technology
General Electric Company
130 Main Street
Somersworth, NH 03878 – 3194

Contents

1. Product Description 1-1

1.1 General Information 1-2
1.1.1 Physical Description 1-3
1.1.2 Meter Forms 1-4
1.1.3 Physical variants available 1-5
1.1.4 Hardware Options 1-5
1.1.5 Demand operating mode 1-6
1.1.6 On site user features 1-8
1.1.7 Advanced features and soft switches 1-8
1.2 Programming and Reading Software 1-9
1.3 Technical Information 1-9
1.3.1 Theory of Operation 1-10

2. Operating Instructions 2-1

2.1 Nameplate Information and Labels 2-1
2.1.1 Upper Nameplate Information 2-1
2.1.2 Lower Nameplate Information 2-2
2.1.3 Labels 2-3
2.2 Display Information 2-7
2.2.1 Display Modes 2-12
2.2.2 Liquid Crystal Display Information 2-14
2.2.3 Display Examples 2-16
2.3 Site Genie Monitoring System 2-18
2.3.1 Service Display 2-18
2.3.2 Display of Phasor Information 2-20
2.3.3 Diagnostic Displays 2-25

3. Maintenance Instructions 3-1

3.1 Recommended Procedures 3-2
3.1.1 Meter Testing Tools 3-2
3.2 Test Mode 3-3
3.2.1 Starting the Test Mode 3-4
3.2.2 While in Test Mode 3-4
3.3 Field Accuracy Test 3-6
3.3.1 Field Testing With Test Mode 3-6
3.3.2 Maximum Demand Reading Testing 3-6
3.4 Disk Analog Testing 3-7
3.5 Shop Test 3-8
3.5.1 Meter Shop Equipment 3-8
3.5.2 Test Constant 3-8
3.5.3 Watthour Test Procedure 3-9
3.5.4 VArhour Testing 3-10

3.6 Battery Replacement 3-10
3.6.1 Replacing the Battery 3-10
3.6.1.1 Replacing the Battery when a Battery Port is not Present on Meter Cover 3-10
3.7 Service 3-11
3.8 Repair 3-11
3.9 Returning a Meter 3-11
3.10 Cleaning 3-12
3.11 Storage 3-12
3.12 Troubleshooting Guide 3-12
3.13 Errors and Cautions 3-12
3.13.1 Error Reporting 3-12
3.13.2 Caution Reporting 3-15

4. Upgrading 4-1

4.1 General 4-1
4.2 Softswitches 4-1
4.2.1 Alternate Communication—A Softswitch 4-2
4.2.2 By Quadrant Measurements—B Softswitch 4-2
4.2.3 Call In on Outage—C Softswitch 4-2
4.2.4 DSP Sample Output—D Softswitch 4-2
4.2.5 Event Log—E Softswitch 4-2
4.2.6 Instrument Transformer Correction—I Softswitch 4-3
4.2.7 kVA, kvar and Power Factor Measurements—K Softswitch 4-3
4.2.8 Transformer Loss Compensation—L Softswitch 4-3
4.2.9 Expanded Measurements—M Softswitch 4-3
4.2.10 Demand—N Softswitch 4-4
4.2.11 Pulse Initiator Output—P Softswitch 4-4
4.2.12 Power Quality Measurements—Q Softswitch 4-4
4.2.13 Basic Recording—R Softswitch 4-4
4.2.14 Time Of Use—T Softswitch 4-4
4.2.15 Fast Voltage Event Monitor & Log—V Softswitch 4-5
4.2.16 Waveform Capture—W Softswitch 4-5
4.2.17 Expanded Recording—X Softswitch 4-5
4.2.18 Totalization—Z Softswitch 4-5
4.3 Converting from Demand to Demand LP or TOU Mode 4-6
4.4 Meter Disassembly 4-6
4.4.1 Removing the Meter Cover 4-7
4.4.2 Removing the Electronics Module 4-7
4.4.3 Removing an Option Board 4-8
4.5 Option Board Installation 4-9
4.5.1 Installing Option Boards 4-9
4.6 Meter Reassembly 4-17

5. Site Analysis Guides 5-1

6. Diagrams 6-1

7. Index 8-1

Figures

Figure 1-1: The kV2c Meter 1-1
Figure 1-2 kV2c Meter Block Diagram 1-10
Figure 2-1. Meter Nameplate 2-1
Figure 2-2. Upper Nameplate Information 2-2
Figure 2-3: Lower Nameplate 2-2
Figure 2-4: Warning Label 2-3
Figure 2-5: Location of warning label 2-3
Figure 2-6: Softswitch Label and Load Profile Label 2-4
Figure 2-7 Location of Soft switch Label and Load Profile Label 2-5
Figure 2-8: S I/O Label and M I/O Label 2-6
Figure 2-9: Location of I/O Label 2-7
Figure 2-10: Alternate Display Mode Switch 2-13
Figure 2-11 Liquid Crystal Display Information 2-15
Figure 2-12 kWh Display 2-16
Figure 2-13 Alternate Display 2-17
Figure 2-14 Test Mode Display 2-17
Figure 2-15 Typical Service Display 2-19
Figure 2-16: Service Error Display 2-20
Figure 2-17 Phase Notation 2-23
Figure 2-18: Phase Angle Conventions 2-23
Figure 2-19: Phasor Display Examples 2-24
Figure 2-20: Phasor Diagram 2-25
Figure 3-1: OPTOCOM Port 3-2
Figure 3-2: Liquid Crystal Display 3-3
Figure 4-1. Exploded View of kV2c Meter 4-8
Figure 4-2. Installing a Communication Option Board 4-9
Figure 4-3: Installing the I/O Option Board 4-10
Figure 4-4: Installing the I/O Option Board 4-11
Figure 4-5: A Base I/O Cable Installation 4-12
Figure 4-6: A Base I/O Cable Installation 4-13
Figure 4-7 Disassembly and Reassembly of Shroud 4-14
Figure 5-1 Site Genie Worksheet 5-46
Figure 6-1 ANSI Meter Diagrams 6-1
Figure 6-1 Outline Drawings 7-3

Tables

Table 1-1. ANSI Standard Meter Forms 1-4
Table 2-1. Expected Service Types 2-19
Table 2-2. Service Displays 2-20
Table 2-3. Site Genie Display Scroll 2-21
Table 2-4. kV2c Meter Phase Notation 2-22
Table 2-5. Site Genie Diagnostics 2-26
Table 2-6. Problem Detection with Diagnostic Tests 2-27
Table 3-1. Default Test Mode Values 3-4
Table 3-2. Test Mode Default Display 3-5
Table 3-3 Allowable Kt Range of Values 3-9
Table 3-4. Error Code Display 3-13
Table 3-5. Caution Code Display 3-15
Table 3-6 Fault Symptoms Without Codes 3-18
Table 4-1 kV2c Softswitches 4-1
Table 4-2 S I/O Cable Wiring 4-16
Table 4-3 M I/O Cable Wiring 4-16
Table 5-1 Site Analyses 5-1

Equations

Equation 2-1. Power factor Relationships 2-31
Equation 2-2. Apparent Power Definition 2-31
Equation 3-1. Accumulated Watthours Calculation 3-7

1. Product Description

GE's kV2c Multifunction Meter represents a new level of functionality in revenue grade electricity meters. By building on the foundation of the GE kV2 Vector Electricity Meter and the addition of a wide range of powerful new meter functions, GE has created a new standard for meter capability.

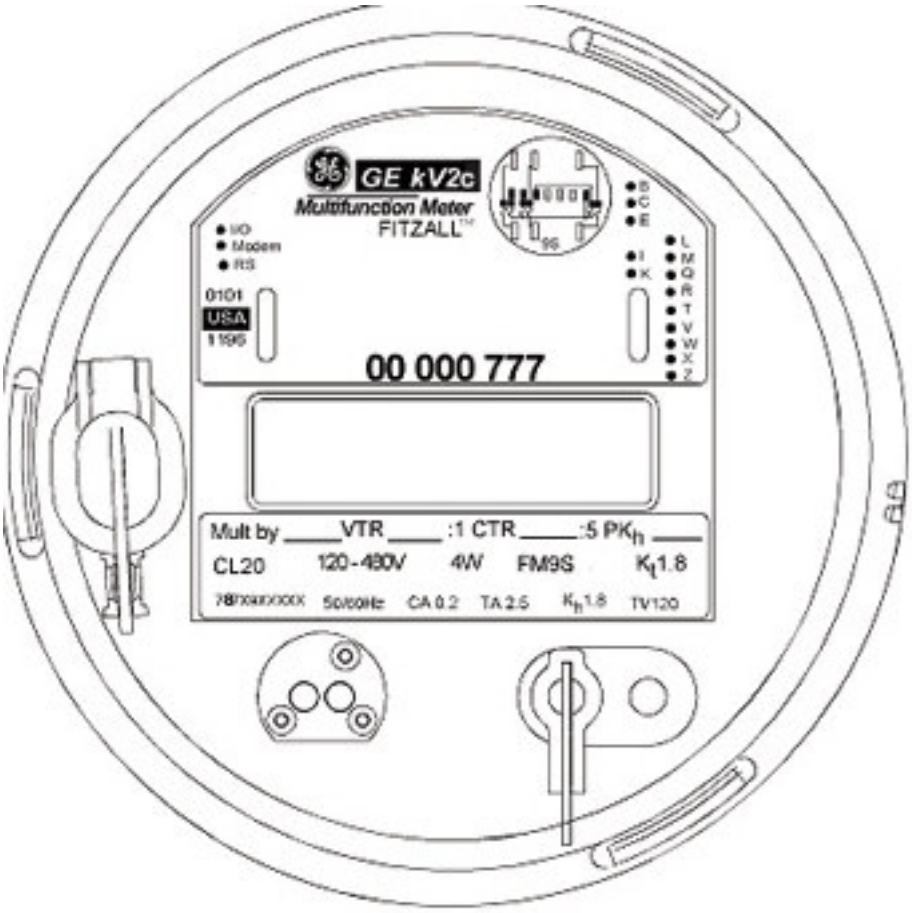

Figure 1-1: The kV2c Meter

The kV2c meter retains the familiar characteristics of the kV2 meter, including:

Fitzall™ operation and consolidated forms, 57 to 120 or 120 to 480 Volt measurement capability, service installation analysis (Site Genie™), , event logging and power quality monitoring, accurate measurement in the presence of DC currents, and standardized meter reading (ANSI C12.18) and programming (ANSI C12.19).

The kV2c meter also provides a wide range of new features, making it the most powerful meter of its kind anywhere. These include an extended range of software configurable features (soft switches), alphanumeric display, enhanced energy, demand, and time of use

billing measures, new power quality analysis tools, measurement correction features, powerful logging and recording functions, built in totalization, and much more.

1.1 General Information

The kV2c Meter is similar to the kV2 Meter in physical construction and in its measurement principles:

- Dependable apparent power measurements for unbalanced loads and asymmetrical services. IEEE-defined vector calculations of polyphase quantities.
- Accurate measurement in the presence of DC currents.
- Fundamental only or fundamental plus harmonics measurements
- Distortion power and distortion power factor measurements
- Elimination of P/I ratios and meter measurement constants
- Demand meter with Load Profile recording in addition to flexible energy, demand, and TOU modes
- All nonvolatile data storage including Load Profile data
- Support for ANSI Reading and Programming Standards C12.18 and C12.19
- Fitzall™ operation for reduction of stocked form variations
- Wide voltage range operation
- Optional internal telephone modem
- Optional RS 232 / 485 communications interface
- Optional output pulse initiators

The kV2c meter additionally incorporates many new physical and functional features substantially enhancing its capability.

- Alphanumeric display
- Optocom communications up to 56k baud
- Optional battery hatch for battery replacement through the cover
- Optional high precision oscillator for accurate timekeeping in installations with unstable line frequency
- Optional Multifunction I/O board for up to 8 pulse outputs and 4 inputs, plus real time pricing input
- Capability for future firmware upgrades in the field
- Expanded set of soft switched features for easy field enabling of powerful new features
- Built in load profile and event logging features (under soft switch control), no option board required. Load profile of up to 20 data channels.
- Energy, demand, and TOU metering including real and reactive, bi-directional, 4 quadrant, per phase, and coincident quantities, more displayables, bigger tables, and more.

- Power Quality monitoring features including voltage sag and swell detection with programmable magnitude and duration down to 1 cycle, total Demand Distortion calculation, waveform capture and harmonic analysis
- Pulse inputs from up to 4 other meters with flexible totalization and processing options
- Correction of VT and CT error factors
- Transformer and line loss compensation

The features of the meter are described more fully in book GEH-7285A, “kV2C Meter Features and Applications”.

1.1.1 Physical Description

The kV2c meter uses a clear Lexan™ cover. The cover is molded in one piece and has an integrated Optocom communications port and demand reset mechanism. An optional battery port can be ordered in the cover to enable changing the battery without removing the meter cover.

The meter base assembly provides provision for connection of the meter to the electrical service to be metered, the basic physical structure, and current scaling devices. All common S base and A base (bottom connected) configurations are provided.

The electronics module contains the circuit power supply, all circuits for measurement, calculation, and display of meter data, and the connector for attachment of option boards.

The nameplate is removable and contains information not found on conventional meters. All the markings on the meter face are identified in Chapter 2, Operating Instructions.

The liquid crystal display indicates energy consumption and various other data. The display is covered in detail in Chapter 2, Operating Instructions. The 6 large characters of the display can display either numeric or alphabetic information.

The alternate display switch is located on the right side of the meter face slightly below the 3 o’clock position and is activated by a magnet. The switch and its use is also described in detail in Chapter 2, Operating Instructions.

The demand reset and test switches are located at the 5 o’clock position of the meter face. The test switch has no external access. The cover must be removed to operate the switch.

An optical (OPTOCOM™) port is located in the 7 o’clock position of the meter face. The optical port allows a computer to communicate with the meter for reading and programming using Standard Tables (ANSI C12.19) and PSEM (Protocol Specification for Electricity Meters [ANSI C12.18]). The kV2c Optocom™ port can operate at speeds from 9600 to 56k baud.

The battery for the time-of-use option is visible at the 9 o’clock position. It is the industry-standard battery.

1.1.2 Meter Forms

The ANSI Standard S Base (socketed) and A Base (bottom connected) Meter Forms are shown in Table 1-1.

Table 1-1. ANSI Standard Meter Forms

Form	Wires	Circuit	Elements	SC/TR	Class
1S	2	1Ø	1	SC	200, or 320
2S	3	1Ø	1	SC	200, or 320
3S	2	1Ø	1	TR	20
4S	3	1Ø	1	TR	20
9S, 10A, 48A	4	3Ø Y or Δ	3	TR	20
12S	3	Network or 3ØΔ	2	SC	200, or 320
13A	3	Network or 3ØΔ	2	SC	150
16S	4	3Ø Y or Δ	3	SC	200, or 320
16A	4	3Ø Y or Δ	3	SC	150
36S[1,3] 36A[1,3,4]	4	3Ø Y	2½	TR	20
45S[2,3] 56S[5] 45A[2, 3]	3,4,5	1Ø, 2Ø, Network, 3Ø Y or Δ	2	TR	20
9S	4	3Ø			200, or 320

Form	Wires	Circuit	Elements	SC/TR	Class
10A (No KYZ)	4	3Ø		TR	20
45A (No KYZ)	3	3Ø		TR	20
2S		1Ø		SC	200
16S		3Ø		SC	200
16SB	4	3Ø		SC	20
12SB	3	3Ø			20
3CS	2	1Ø	1	TR	20

Notes:

[3]. These forms are the traditional 2 ½-and 2-element solution for metering 4-wire circuits in the United States. However, 2 ½- and 2-element meters in 4-wire circuits do not produce a Blondel solution. Without a Blondel solution, systematic errors may occur when a voltage imbalance exists.

1.1.2.1 Fitzall™ Operation

The GE Fitzall™ feature, combined with wide voltage range operation, allows users to meter a wide variety of service types with only 2 basic meter types. A basic form 9S (or 10A, 48A) meter is used for transformer rated applications and form 16S (or 16A) is used for self contained applications. By using the MeterMate™ software to convert the meter for a different service type and providing an appropriately wired socket, any service can be metered. See Fitzall™ instruction book GEI-52590 for details.

1.1.3 Physical variants available

The basic physical description of the meter and available S base and A base forms have been described above. Switchboard configurations will also be available.

1.1.3.1 Voltage ratings

The standard meter voltage rating is 120V to 480 V, +10% / -20%. A low voltage version is also available for 57V to 120V applications. Choices of these variants must be made when the meter is ordered.

1.1.3.2 Timebase

The standard meter keeps time from the line frequency. A special version is available with a high precision crystal oscillator for use where line frequency does not provide adequate stability for line based time keeping. Choices of these variants must be made when the meter is ordered.

1.1.4 Hardware Options

Each of the features described in this section is a hardware option that can be added to the meter. Note that option boards are generally NOT INTERCHANGABLE between the kV and kV2c meters but can be changed between a kV2 and kV2C meter. However, the kV modem and RSX boards may be used in either the kV or kV2 or kV2c. No other common usage is permitted.

1.1.4.1 Battery port

The kV2c meter offers a cover battery port enabling changing of the meter (TOU) battery without removing the meter cover. This battery is used for time keeping during power outages. Covers with battery ports may be ordered with the meter or retrofitted in the field.

1.1.4.2 Communications option boards

Two communications options boards are offered for the kV2c. One is an internal 2400 baud telephone modem circuit board (type T-2). The second is the RSX board (type RSX-2), which is used to connect the meter to an external modem via a RS-232 interface or to provide for data connection to a RS-485 system. Either the internal modem or RSX board may be installed, but not both at the same time. These communications options may be ordered with the meter or installed in the field.

1.1.4.3 Input / Output option boards

Two types of I/O option boards are available for the kV2c meter.

The Simple I/O board (type S I/O-1) provides two form C outputs, one form A output, and one Real Time Pricing input to the meter. The outputs are programmable to provide a variety of functions including energy pulses, alerts, or End of Interval indication.

The Multiple I/O board (type M I/O-1) provides two form C outputs (with a common K connection), six form A outputs (with one common connection), one Real Time Pricing input, and four pulse inputs to the meter which may be used as either 3 wire (form C) or 2 wire (form A) inputs. Pulse inputs are used as data inputs to the meter. Processing of this data is very flexible, including most processes used for internal measurements and totalization. Either of the I/O boards may be installed, but not both at the same time. These options may be ordered with the meter or installed in the field.

Note that throughout this document when we refer to Form A pulse initiator outputs we are technically referring to two-wire, bi-stable outputs. Every contact change of state represents the programmed value of wh/varh/Qh/VAh. Strictly speaking, a traditional Form A output represents a normally open, momentary closure type of output where one cycle (from open to closed to open again) represented the desired output value. Most modern solid state metering products, including the kV and kV2c meters, have adopted the revised definition of Form A outputs where each change of state (from open to closed, or from closed to open) represents the desired output value. Similarly, every change of state is counted as a pulse for the external inputs (Form A or Form C).

1.1.5 Demand operating mode

The basic kV2c meter has several operating modes. It is not necessary to buy different versions of the meter to get these features, all modes are built into every meter.

Demand mode is the most basic mode of operation. Demand mode does not require a battery. The basic meter in demand mode provides:

- Energy measurement (5 quantities)
- Demand (5 quantities - block, or rolling demand, maximum, cumulative, and continuously cumulative displays). Alternatively, a 5 thermal demand measures is also available.
- Coincident values at the time of maximum demand (2 quantities for each demand)
- Fundamental only and fundamental plus harmonics measurements (both are available simultaneously)
- Bi-directional energy measurements with various detenting choices
- Self-monitoring of meter operation for 7-meter error conditions, and 5 meter caution conditions.
- Site GEnie™ site analysis information including 8 installation diagnostics
- Power Guard System – Power Quality information – many useful measurements
- Alternate display scroll
- Test mode to test meter operation and site characteristics without effect on billing quantities or load profile data.
- Input/Output board support for pulse outputs, alert outputs, pulse inputs, and real time pricing input
- Programming Seal function for enhanced security
- Security Table of key meter events

1.1.5.1 Site GEnie™ System

The Site Genie Monitoring System displays circuit information used by the kV2c Meter to determine service type. Diagnostic information & counters are also displayed. The information in the Site Genie™ display scroll can be used to help determine why an installation error or diagnostic error has occurred. Voltages and currents displayed in the Site GEnie mode are fundamental frequency only measurements.

The 26 displays that make up the Site Genie display scroll can be grouped as follows:

- Service type
- Voltage phase angles, A, B, C
- Voltages, A, B, C
- Current phase angles A, B, C
- Currents, A, B, C
- Power factor (kW/kVA)

- Distortion Power Factor
- Diagnostic counters 1 – 8

The Site GEnie ™ system is described in detail in “Operating Instructions”, section 2 of this manual.

1.1.5.2 Power Guard System

The Power Guard system provides measurements valuable in monitoring and evaluating power quality and system characteristics. Many quantities are available for meter display and table reading via local or remote communication. Some quantities can be defined by the user, where some definitions may require soft switches to access these measures.

- Line frequency
- Phase sequence – ABC or CBA
- Phase voltages – line to line and line to neutral, either fundamental only or fundamental plus harmonics – RMS
- Phase voltage phase angles (display or table reading only)
- Phase currents - fundamental only or fundamental plus harmonics – RMS
- Phase current phase angles (display or table reading only)
- Neutral current
- Power – active, per phase (fundamental frequency only, or fundamental plus harmonics)
- Power – reactive, per phase (fundamental frequency only, or fundamental plus harmonics)
- Apparent power (kVA) per phase
- Power factor (user defined)
- Displacement power factor (fundamental frequency)
- Outage counter
- Date and time of last outage (TOU and demand LP)
- Cumulative power outage time (TOU and demand LP)
- Site GEnie diagnostics
  - Distortion diagnostic with counter (user defined)
  - High neutral current diagnostic with counter
  - Over voltage diagnostic with counter
  - Under voltage diagnostic with counter
- Distortion kVA per phase
- Distortion Power Factor (DPF) – total and per phase
- Total Harmonic Distortion (THD) per voltage phase
- Total Harmonic Distortion (THD) per current phase
- Total Demand Distortion (TDD) per phase

Other conditions are monitored for control of alert outputs.

- Low power factor alert (user defined)
- High demand alert (user defined)
- Diagnostics 1~8
- Meter Cautions
- Demand Overload
- End-Of-Interval alert
- TOU Rate alert
- Real Time Pricing (RTP) alert

1.1.6 On site user features

1.1.6.1 Operation

The kV2c meter has many features for ease of use on site.

- Nameplate and label information
- Alphanumeric display with key annunciators
- Several display modes including normal, alternate, test
- Site GEnie™ mode with information on the installation voltages, currents, phase angles, and several installation diagnostic functions

These features are described in detail in “Operating Instructions”, section 2 of this manual.

1.1.6.2 Maintenance

The kV2c meter is designed for unattended operation over a long life. When attention is required by the meter or the site, the meter has features to facilitate these tasks.

- Many modes of operation and enhanced functions are built into the meter software and may be enabled without physical change to the meter.
- Upgrading from Demand to Demand Load Profile or Time of Use operation requires no added hardware, aside from the battery that supports timekeeping during power outages.
- Software changes and feature additions may be done in the field.
- Disk analog on the display for field calibration testing.
- Test mode for convenient calibration testing without affecting billing data.
- Self test of meter operation and diagnostics of installation characteristics
- Flexible control of display for meter diagnostic error conditions and cautions of meter and installation operating conditions.

Maintenance instructions are covered in section 3 of this manual.

1.1.7 Advanced features and soft switches

Many advanced features of the kV2c meter can be enabled by turning on “soft switches”. Soft switches are logical controls which enable related groups of meter features. Without activation of a soft switch, operation of the controlled features is suppressed. Soft switches may be enabled in the meter as shipped from the factory, or may be turned on at any time by the use of Meter Mate software.

The following soft switches are available in the kV2c meter:

- B Switch By quadrant measurements
- C Switch Call In on Outage (Modem)
- E Switch Event Log
- I Switch Instrument Transformer Correction
- K Switch kVA - Power Factor, Kvar and kVA measures
- L Switch Transformer Loss Compensation
- M Switch Expanded Measures - per phase measurement
- Q Switch Power Quality Measures
- R Switch Basic Recording (Four-channel)
- T Switch Time of Use
- V Switch Fast Voltage Event Monitor and Log
- W Switch Waveform capture

- X Switch Expanded Recording (20-channel)
- Z Switch Totalization
- N Switch Billing Demands

Operating features controlled by soft switches are described in section 4, Upgrading.

1.2 Programming and Reading Software

The meter is supported by the MeterMate™ software suite. This software facilitates setting up and using many meter features:

- Creation of custom meter programs
- Loading programs into the meter
- Setting site specific meter parameters
- Viewing Site Genie™ data
- Viewing real time data
- Waveform capture and harmonic analysis
- Reading meter data
- Load Profile data analysis and reporting
- Meter program and meter data reporting
- Batched meter communications
- Meter mode conversion and soft switch upgrading

Refer to Reading and Programming Instruction manual for Metermate (GEH-5084I Metermate MMCOMM Instructions book)

1.3 Technical Information

This section contains the theory of operation and general circuit configuration of the GE kV2c Meter.

1.3.1 Theory of Operation

The theory of operation of the kV2c Vector Electricity Meter is described in conjunction with the block diagram shown in Figure 1-2.

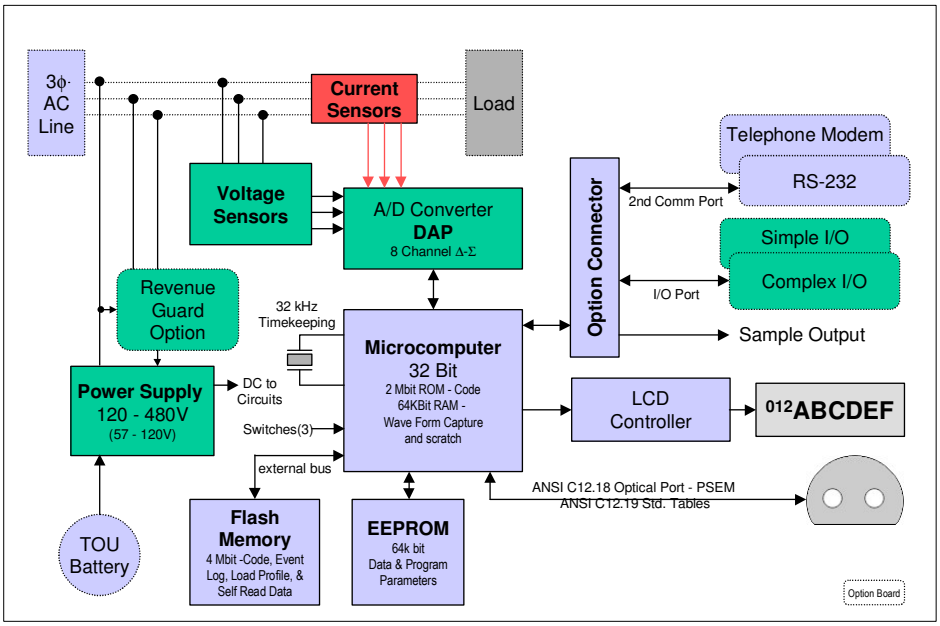

Figure 1-2 kV2c Meter Block Diagram

1.3.1.1 Sensing Devices

Voltages are sensed by three separate high impedance resistive voltage dividers. Currents are sensed by up to three separate Current Transformers, each feeding to the current signal sampling circuit. The sensors provide scaled signals to the Data Acquisition Platform (DAP) chip.

1.3.1.2 Data Acquisition

The Data Acquisition Platform (DAP) chip contains six independent, fully integrated analog to digital converters, one for each current and voltage signal. The converters are continuous time, delta-sigma analog to digital converters digitizing each signal 1.68 million times per second. Each input signal has a dedicated converter, multiplexing is not used. The converter over sampling rate of 512 provides approximately 3280 complete sets of decimated samples per second. For a full three element meter, 6 sets of 16-bit samples are processed, providing more than 54 decimated sample sets per line cycle.

1.3.1.3 Microcomputer

The microcomputer is a 32-bit expandable single chip microcomputer. It receives 16 bit data samples from the DAP chip. The microcomputer provides all data processing functions, including sample processing and digital filtering, accumulations, products and calculation of advanced quantities. It does time keeping and provides all register and display functions of the meter. It uses non volatile memories on the circuit board for storage of metered data

and program parameters. It communicates through the OPTOCOM port for reading and programming.

1.3.1.4 Nonvolatile Memory

The kV2c meter is equipped with two nonvolatile memory devices. All data values and program parameters are stored in semiconductor nonvolatile memory, battery is not required for data storage. EEPROM memory stores programmed operating parameters and meter data. Flash memory is used for special program provisions and memory intensive data requirements. Meter data quantities are updated at each power fail event. Stored data is constantly checked to prevent errors.

1.3.1.5 Power Supply

The kV2c meter is powered from the A phase voltage line. It has a wide range solid-state switching type power supply. The standard voltage range is 120V to 480V, the optional low voltage range is 69(57) to 120V. Both versions have an extended operating range of -20% to +10% of rating. The supply operates for either 50Hz or 60Hz line frequency.

Warning: Do not exceed 575(144) Volts on the power supply voltage input terminals for the 57-120V, or 575(850) Volts for the 120-480V supply.

1.3.1.6 Time Keeping Battery

A standard 3.6V, half-size AA, lithium battery maintains the meter clock when the meter is programmed as a time-of-use meter or demand meter with Load Profile recorder. Since all billing and programming information is stored in nonvolatile memory, the battery is primarily used for maintaining date and time information during a power outage. Under normal conditions, the battery should provide more than 1 year of service during outage conditions (time on battery backup) and more than 10 years of service during storage conditions (disconnected from terminals) or when properly installed in an energized meter.

1.3.1.7 Option boards

The basic meter provides connections, signals, and power for one or two other snap in option boards. One is a communications board, either 2400 baud telephone modem or RS – 232 or 485 communications interface board. The second is a pulse Input/Output interface board. It is available as either a Simple I/O or Multiple I/O version.

2. Operating Instructions

2.1 Nameplate Information and Labels

See Figure 2-1 for a graphic representation of the meter nameplate. The meter nameplate is found on the front of the meter.

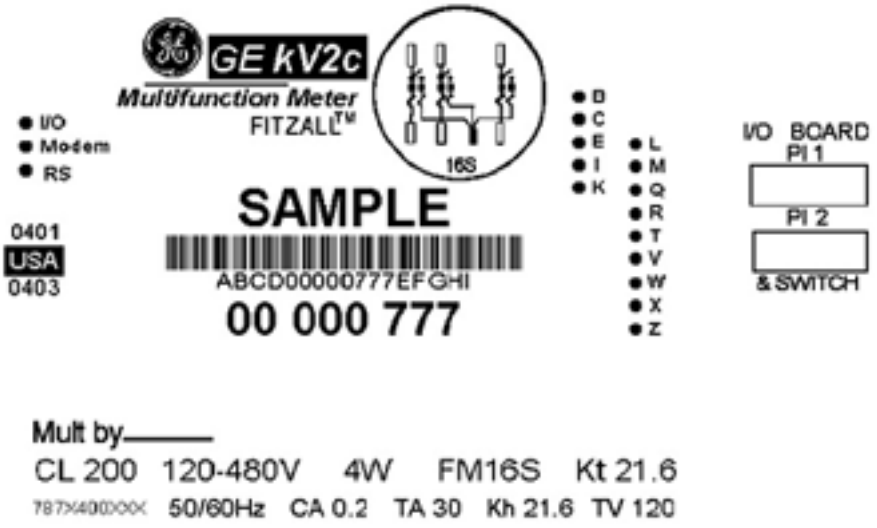

Figure 2-1. Meter Nameplate

2.1.1 Upper Nameplate Information

The upper nameplate information is shown in Figure 2-2. The following numbered list coincides with the numbers in the figure.

1. Meter type
2. ANSI C12.10 diagram of meter internal connections
3. Filled circle indicates that softswitch has been enabled
4. Utility information and bar code area
5. Firmware revision (2 digit)
6. Month and Year of manufacture (MMYY)
7. Hardware revision (2 digit)
8. Installed option boards
9. Meter Serial number

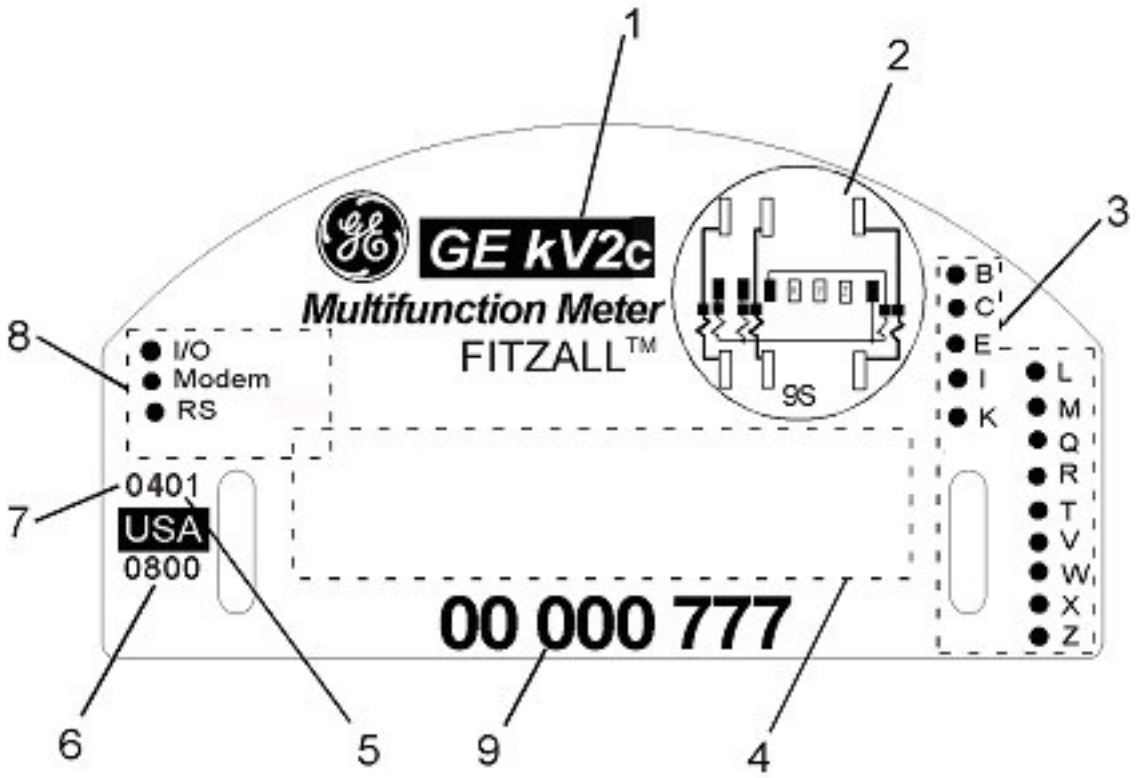

Figure 2-2. Upper Nameplate Information

2.1.2 Lower Nameplate Information

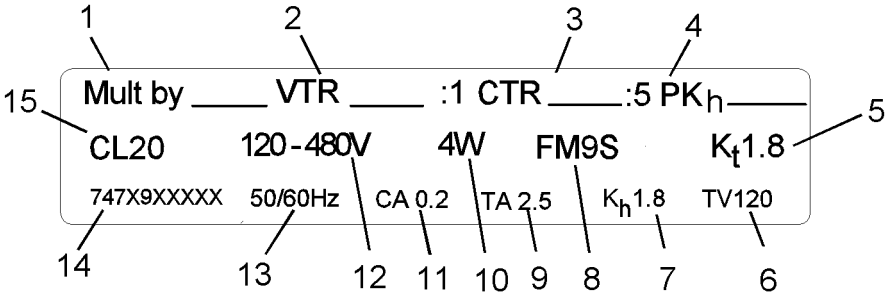

Figure 2-3: Lower Nameplate

The numbered list below coincides with the numbers in Figure 2-3.

1. Multiply by constant
2. Voltage transformer ratio
3. Current transformer ratio
4. Primary Watthour constant
5. Watthour test constant
6. Test voltage
7. Watthour meter constant

8. ANSI C12.10 Form Number
9. Test amperes
10. Number of wires for the metered service
11. ANSI C12.20 Accuracy Class — S-base CA 0.2, A-base CA 0.5
12. Nominal Voltage operating range
13. Nominal Frequency
14. Catalog number
15. Current Class

2.1.3 Labels

Additional labels found on the kV2c meter are the warning label, softswitch label, load profile label and I/O label.

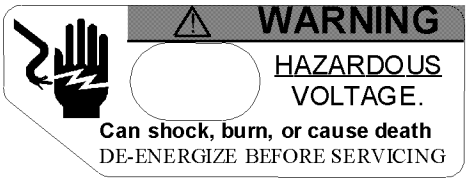

Figure 2-4: Warning Label

The warning label is shown in Figure 2-4. It is found on the front of the meter on the lower left corner of the bezel. The warning label advises to disconnect the meter from any external circuits before servicing since the meter operates at lethal voltages. The warning label is obscured by meter cover frosting when the cover is in place.

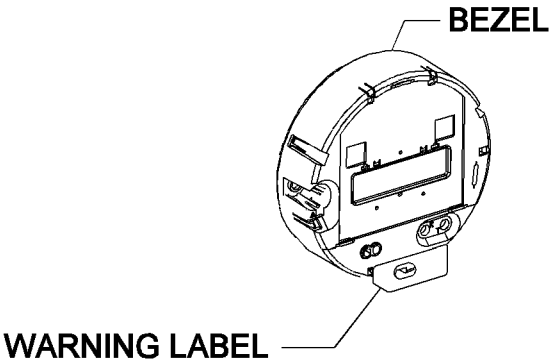

Figure 2-5: Location of warning label

Softswitches

B By Quadrant measurements
C Call in on Outage
E Security Power Quality Log
G Revenue Guard Plus
I IT accuracy Correction
K Simple kVA
L XFMR Loss Compensation
M Per phase measures
Q Power Quality Measures
R Recording (4-ch)
T Time of Use
V Sag and swell log
W Harmonic Analysis
X Recording (20-ch)
Z Totalization

5934067035

Recorder

Ch	Qty.
1	
2	
3	
4	
5	
6	
7	
8	
9	
10	
11	
12	
13	
14	
15	
16	
17	
18	
19	
20	

5934067035

Figure 2-6: Softswitch Label and Load Profile Label

The softswitch and load profile labels can be seen in Figure 2-6. Both of these labels are found on the side of the bezel as seen in Figure 2-7 and are present on every kV2c meter. The softswitch label provides the names associated with the one letter softswitch identifiers. The load profile label provides a place to mark quantities recorded in each of up to 20 load profile channels.

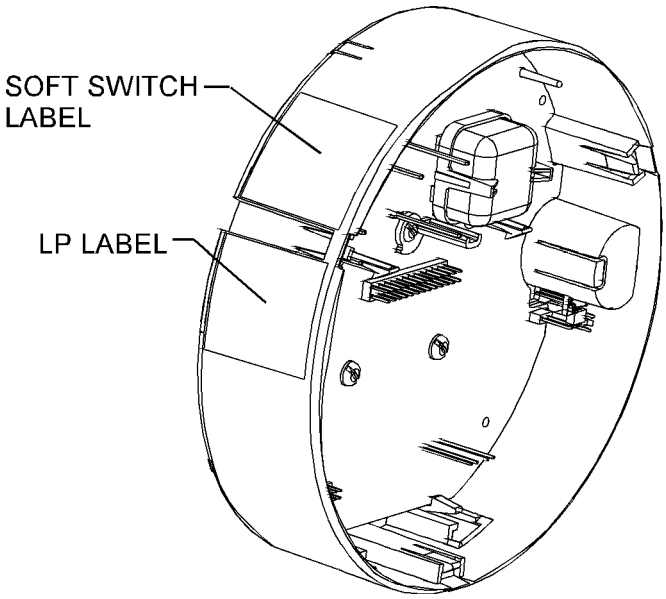

Figure 2-7 Location of Soft switch Label and Load Profile Label

I/O Cable		
Signal Name	*Wire Color*	*Measure*
Y1_OUT	Yellow	
Z1_OUT	Black	
Y2_OUT	Grey	
Z2_OUT	Blue	
K1/K2_OUT	Red	
Z3_OUT	Orange	
K3_OUT	Brown	
RTP+	Violet	
RTP-	Green	

kV2 M I/O Cable		
Signal Name	*Wire Color*	*Measure*
Y1_OUT	Yellow	
Z1_OUT	Black	
Y2_OUT	Grey	
Z2_OUT	Blue	
K1/K2_OUT	Red	
Z3_OUT	Orange	
K3/K8_OUT	Brown	
RTP+	Violet	
RTP-	Green	
Z4_OUT	White	
Z5_OUT	White/Black	
Z6_OUT	White/Brown	
Z7_OUT	White/Red	
Z8_OUT	White/Orange	
Y1_IN	White/Yellow	
K1_IN	White/Green	
Z1_IN	White/Blue	
Y2_IN	White/Violet	
K2_IN	White/Grey	
Z2_IN	White/Black/Brown	
Y3_IN	White/Black/Red	
K3_IN	White/Black/Orange	
Z3_IN	White/Black/Yellow	
Y4_IN	White/Black/Green	
K4_IN	White/Black/Blue	
Z4_IN	White/Black/Violet	

5534067036

Figure 2-8: S I/O Label and M I/O Label

There are two I/O labels depending on whether an S I/O board or an M I/O board is present in the meter. Both labels can be seen in Figure 2-8. The I/O label can be found on the side of the shroud in Figure 2-9.

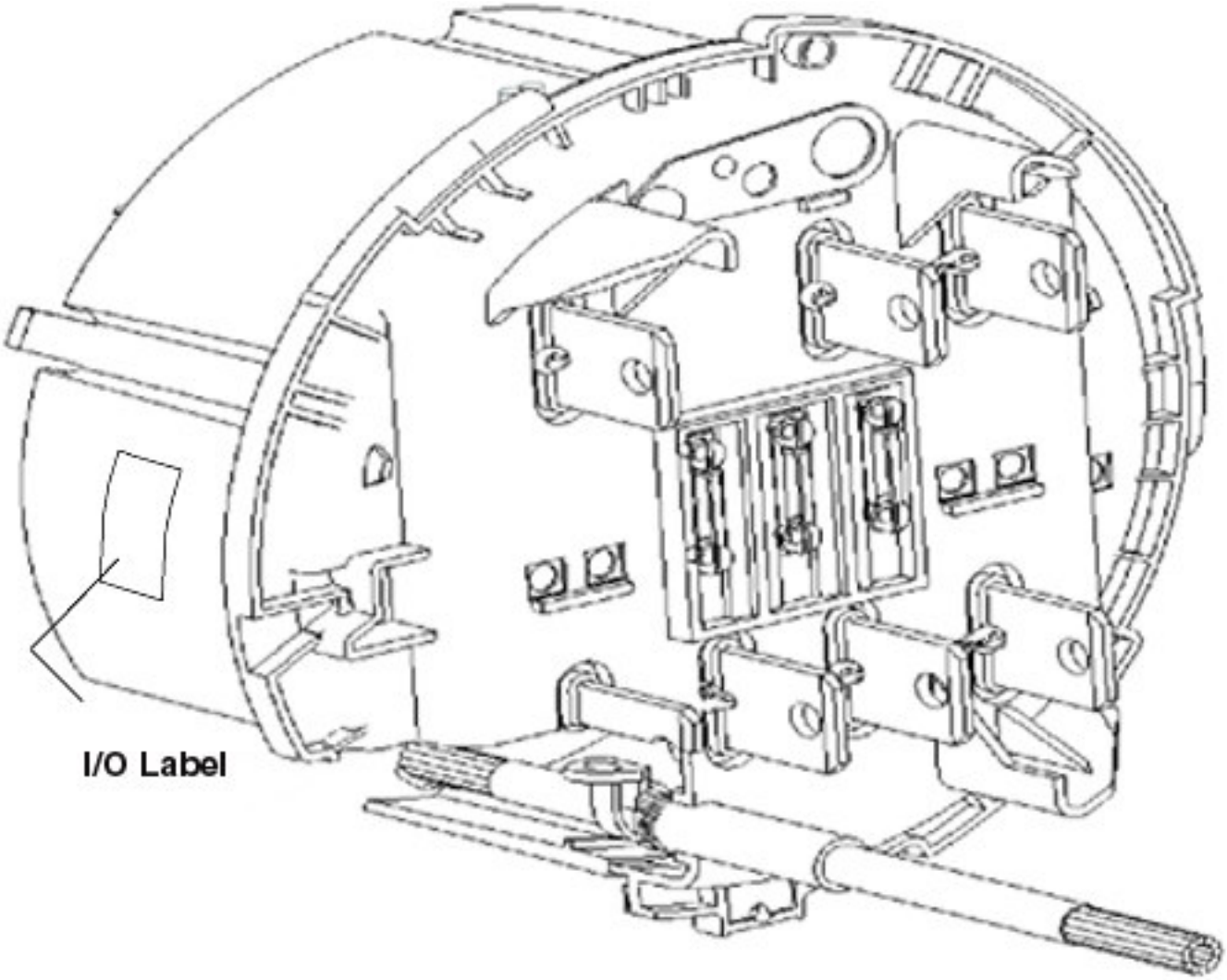

Figure 2-9: Location of I/O Label

2.2 Display Information

A total of 977 different user selectable quantities are available for display. As the meter is very flexible, a wide range of quantities can be defined for mapping to meter calculations and display. In the table below "UOM" refers to "Unit of Measure", a general term for a range of measurements which can be displayed, as defined by the meter program. UOM quantities can be kWh or other integrating volt-amp quantities (such as kVA), currents, voltages, or numeric (pulse count) values.

Display Item	Operational Modes Available
Current Season	

Display Item	Operational Modes Available
Maximum 1,2,3,4,5 UOM:	
Maximum Demand	All
Maximum Demand Date	TOU
Maximum Demand Time	TOU
Maximum Demand Coincident 1	All
Maximum Demand Coincident 2	All
Maximum Demand Rate A,B,C,D	TOU
Maximum Demand Rate A,B,C,D Date	TOU
Maximum Demand Rate A,B,C,D Time	TOU
Maximum Demand A,B,C,D Coincident 1	TOU
Maximum Demand A,B,C,D Coincident 2	TOU
Cumulative 1,2,3,4,5 UOM:	
Cumulative Demand	All
Cumulative Demand Rate A,B,C,D	TOU
Continuously Cumulative 1,2,3,4,5 UOM:	
Continuously Cumulative Demand	All
Continuously Cumulative Demand Rate A,B,C,D	TOU
Summations 1,2,3,4,5 UOM:	
Total Summation	All
Summation Rate A,B,C,D	TOU
Instantaneous:	
Momentary Interval Demand	All
Momentary Interval Power Factor	All
Momentary Interval kW element A,B,C fundamental plus harmonics	All
Momentary Interval kW element A,B,C fundamental only	All
Momentary Interval kvar element A,B,C fundamental plus harmonics	All
Momentary Interval kvar element A,B,C fundamental only	All
Momentary Interval distortion kVA element A,B,C	All
Momentary Interval apparent kVA element A,B,C	All
Power Factor:	
Average Power Factor	All
Previous Interval 1,2,3,4,5 UOM:	
Previous Interval Demand	All
<u>Previous Season</u>	
Maximum 1,2,3,4,5 UOM:	
Maximum Demand	TOU
Maximum Demand Date	TOU
Maximum Demand Time	TOU
Maximum Demand Coincident 1	TOU
Maximum Demand Coincident 2	TOU
Maximum Demand Rate A,B,C,D	TOU
Maximum Demand Rate A,B,C,D Date	TOU
Maximum Demand Rate A,B,C,D Time	TOU
Maximum Demand A,B,C,D Coincident 1	TOU
Maximum Demand A,B,C,D Coincident 2	TOU
Cumulative 1,2,3,4,5 UOM:	
Cumulative Demand	TOU
Cumulative Demand Rate A,B,C,D	TOU

Display Item	Operational Modes Available
Continuously Cumulative 1,2,3,4,5 UOM:	
Continuously Cumulative Demand	TOU
Continuously Cumulative Demand Rate A,B,C,D	TOU
Summations 1,2,3,4,5 UOM:	
Total Summation	TOU
Summation Rate A,B,C,D	TOU
Power Factor:	
Previous Season Average Power Factor	TOU
Last Reset	
Maximum 1,2,3,4,5 UOM:	
Maximum Demand	All
Maximum Demand Date	TOU
Maximum Demand Time	TOU
Maximum Demand Coincident 1	All
Maximum Demand Coincident 2	All
Maximum Demand Rate A,B,C,D	TOU
Maximum Demand Rate A,B,C,D Date	TOU
Maximum Demand Rate A,B,C,D Time	TOU
Maximum Demand A,B,C,D Coincident 1	TOU
Maximum Demand A,B,C,D Coincident 2	TOU
Cumulative 1,2,3,4,5 UOM:	
Cumulative Demand	All
Cumulative Demand Rate A,B,C,D	TOU
Continuously Cumulative 1,2,3,4,5 UOM:	
Continuously Cumulative Demand	All
Continuously Cumulative Demand Rate A,B,C,D	TOU
Summations 1,2,3,4,5 UOM:	
Total Summation	All
Summation Rate A,B,C,D	TOU
Power Factor:	
Last Reset Average Power Factor	All
REAL-TIME PRICING (RTP) 1,2,3,4,5 UOM	
RTP Maximum Demand	Dmd/ DmdLP
RTP Cumulative Demand	Dmd/ DmdLP
RTP Continuously Cumulative Demand	Dmd/ DmdLP
RTP Summation	Dmd/ DmdLP
RTP Maximum Demand coincident 1	Dmd/ DmdLP
RTP Maximum Demand coincident 2	Dmd/ DmdLP
Last Reset	
Last Reset RTP Maximum Demand	Dmd/ DmdLP
Last Reset RTP Cumulative Demand	Dmd/ DmdLP
Last Reset RTP Continuously Cumulative Demand	Dmd/ DmdLP
Last Reset RTP Summation	Dmd/ DmdLP
Last Reset RTP Maximum Demand coincident 1	Dmd/ DmdLP
Last Reset RTP Maximum Demand coincident 2	Dmd/ DmdLP
ACCUMULATIONS	
Data accumulation 1 thru 20, UOM	All
SECURITY LOG	
Number of Bad Passwords	All

Display Item	Operational Modes Available
Number of Demand Resets	All
Number of EEPROM Writes	All
Number of OPTOCOM Communications	All
Number of Power Outages	All
Number of Times Programmed	All
Number of Times for Real-Time Pricing Entries	All
Cumulative Power Outage Duration in seconds	TOU/DmdLP
Date of Last Calibration	All
Time of Last Calibration	All
Date of Last Demand Reset	TOU
Time of Last Demand Reset	TOU
Date of Last OPTOCOM Comm.	TOU
Time of Last OPTOCOM Comm.	TOU
Date of Last Power Outage	TOU/ DmdLP
Time of Last Power Outage	TOU/DmdLP
Date of Last Programming	All
Time of Last Programming	All
Date of Last Real-Time Pricing Entry	TOU
Time of Last Real-Time Pricing Entry	TOU
Date of Last Time Change	TOU
Time of Last Time Change	TOU
Date of Last Transformer Loss Compensation Update	TOU
Time of Last Transformer Loss Compensation Update	TOU
Date of Last Transformer Inaccuracy Adjustment	TOU
Time of Last Transformer Inaccuracy Adjustment	TOU

DIAGNOSTIC TOOLS

Distortion

Distortion Power Factor element A,B,C (D/U)	All
Total Demand Distortion element A,B,C	All
Current Total Harmonic Distortion element A,B,C	All
Voltage Total Harmonic Distortion element A,B,C	All
Total Distortion Power Factor	All

Voltage

RMS Volts (fundamental plus harmonics), Phases A,B,C	All
RMS Volts (fundamental frequency), Phases A,B,C	All
RMS Volts (fundamental plus harmonics), Line to Line	All
RMS Volts (fundamental frequency), Line to Line	All
Frequency	All

Current

RMS Amps (fundamental plus harmonics), Phases A,B,C	All
RMS Amps (fundamental frequency), Phases A,B,C	All
RMS Amps imputed neutral current	All

Site Genie Voltage

RMS Volts (fundamental frequency), Phases A,B,C	All
Current Phase Angle (degrees), Phases A,B,C	All

Site Genie Current

RMS Amps (fundamental frequency), Phases A,B,C	All
Current Phase Angle (degrees), Phases A,B,C	All

Diagnostic Counters (number of occurrences)

d1 [Polarity, etc.]	All
d2 [Voltage Imbalance]	All
d3 [Inactive Current]	All
d4 [Current Phase Angle Imbalance]	All
d5-A [Distortion]	All
d5-B [Distortion]	All
d5-C [Distortion]	All

Display Item	Operational Modes Available
d5 Total [Distortion]	All
d6 [Under Voltage]	All
d7 [Over Voltage]	All
d8 [High Neutral]	All

TEST MODE

Test Mode Demand Interval length in minutes (block)	All
Test Mode Demand No of Subintervals. (rolling only)	All
Test Mode Demand Subint. length in minutes (rolling)	All
Test Mode Maximum Demand 1,2,3,4,5 UOM	All
Test Mode Data Accumulation 1 thru 20 UOM	All
Test Mode Time Out Length in minutes	All
Test Mode Thermal Interval Type: “0”=15 min., “1”=1 min.	All
Test Mode Accumulating Demand 1,2,3,4,5 UOM	All
Test Mode Time Remaining in Subint (not valid for thermal demands)	All
Test Mode Power Factor	All
Time Remaining in Test Mode (Sub)interval in min. & sec. (Not valid for thermal demands)	All

CONSTANTS

Demand Interval Length in minutes (block only)	All
Demand No. of Subintervals (rolling only)	All
Demand Subinterval Length in minutes (rolling only)	All
Demand Alert Threshold in UOM per “Display Demand Units” below	All
Demand Delay Length in minutes	All
Minimum Outage for Demand Delay in seconds	TOU
Display Demand Units (“0”=kW,kVA, etc.;”1”=W,VA,etc.)	All
Display Scalar: (for GE internal use)	All
Display Primary Volts/Amps Flag: “0”= Sec, “1”= Pri.	All
Display Multiplier (Scaled): (for GE internal use)	All
Electrical Service	All
Meter ID 1	All
Meter ID 2	All
Program ID	All
Transformer Ratio – Current: X:5	All
Transformer Ratio – Voltage: X:1	All
EOI Duration in seconds: contact closure and annunciator	All
Power Factor Threshold	All
Power Factor Demand Threshold	All
Load Profile # Channels	TOU/ DmdLP
Load Profile Interval Length in minutes	TOU/ DmdLP
Real-Time Pricing State: “0”= Disabled, “1”= Enabled	All
Seal Flag State: “0”= Unsealed, “1”= Sealed Official Government Metrology Control	All
Blank Data Display	All
All Segments	All
Firmware Version No. = 1, 2,...	All
Hardware Version No. = 1, 2,...	All
User defined label 1,2,3,4,5	All
Transformer Factor	All

VARIABLES

Current Season	TOU
Current Date	TOU/ DmdLP
Current Day Of Week (1-7 means Sun-Sat)	TOU/DmdLP
Current Time	TOU/ DmdLP
Time Remaining in Demand (Sub)interval in minutes (Not valid for thermal demands)	All

Display Item	Operational Modes Available
Load Control ON (“0”= OFF, “1”= ON)	TOU
Real-Time Pricing time remaining until activation in min.	All
PREVIOUS SELF READS 1,2,3,4,5	
Date	TOU
Time	TOU
Total Summation 1,2,3,4,5	All
Max Demand 1,2,3,4,5	All
Max Demand Date 1,2,3,4,5	TOU
Max Demand Time 1,2,3,4,5	TOU

2.2.1 Display Modes

There are five display modes:

- Normal
- Alternate
- Site Genie
- Test
- Frozen

The user can switch between display modes using the Display Switch and the Test Switch.

2.2.1.1 Display Switch Actions

The Display Switch is actuated using a magnet as shown in Figure 2-10. Holding a magnet next to the Display Switch for varying lengths of time causes the meter to change display modes:

Less than 3 seconds:	Restarts the Normal Display scroll or produces one Normal Display scroll if an Error, Caution or Diagnostic is frozen on the display.
3 to 6 seconds:	Enters the Alternate Display mode for one scroll then returns to the Normal Display mode.
More than 6 seconds:	Enters the Site Genie Display mode for one scroll then returns to the Normal Display mode.

TIP The magnetic end of the SMARTCOUPLER will activate the Display Switch.

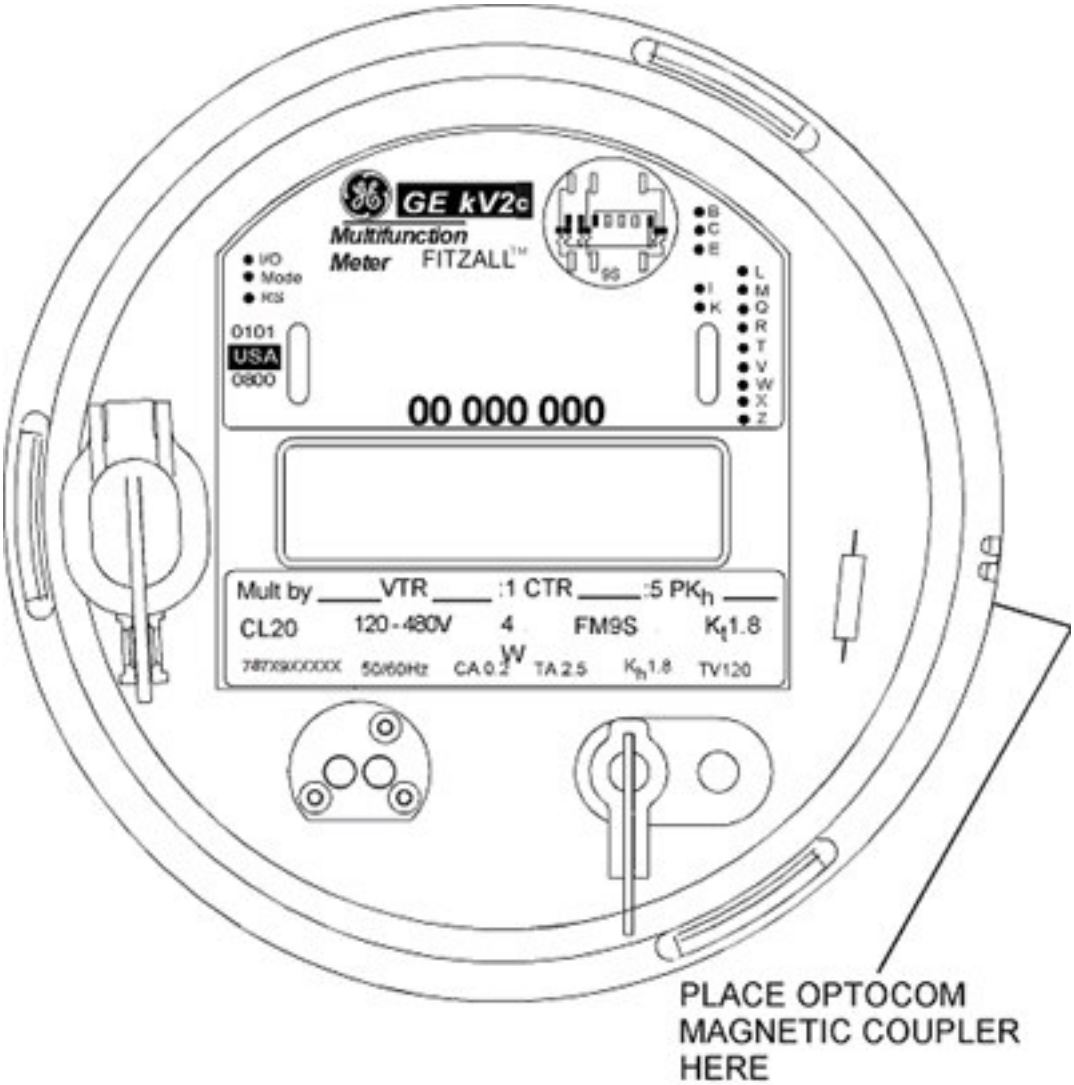

Figure 2-10: Alternate Display Mode Switch

2.2.1.2 Normal Display Mode

In Normal Display mode, the meter display scrolls continually through the Normal Display items until one of the following occurs:

- Demand reset is invoked.
- Display switch is actuated.
- Communication is initiated.
- Test mode is invoked.
- A frozen Error, Caution, or Diagnostic message is triggered.

Note the test mode push button is not accessible with the cover in place.

Normal Display items are selected during program development using MeterMate software. The meter returns to the Normal Display mode when other display modes have completed or timed-out.

TIP While the meter is communicating, the data annunciators are off and the LCD displays "BUSY".

2.2.1.3 Alternate Display Mode

The Alternate Display is used to display information for the meter technician that is not contained in the Normal Display.

- Display Items: selected during Meter Mate program development.
- Initiate: actuate the Display Switch for 3 to 6 seconds.
- Scroll: the meter automatically scrolls through the Alternate Display items.
- Exit: the meter automatically returns to the Normal Display mode after the last Alternate Display item.

2.2.1.4 Site Genie Display Mode

The Site Genie Display is used to display service type, phasor information, and the status of the diagnostic counters.

- Display Items: fixed (see Table 2-3)
- Initiate: actuate the Display Switch for more than 6 seconds.
- Scroll: the meter automatically scrolls through the Site Genie Display items.
- Exit: the meter automatically returns to the Normal Display mode after the last Site Genie Display item is displayed if the Display Switch is not actuated. If the Display Switch is actuated after the last item is displayed, the meter will start another Site Genie display scroll.

2.2.1.5 Test Mode

The Test Mode is used to display data for testing the meter. Normal accumulation of billing data is suspended in the test mode.

- *Display Items*: selected during MeterMate program development.
- *Initiate*: hold the Test (T) Switch for 1 second.
- *Scroll*: momentarily actuate the Display Switch to advance to the next item in the Test Display scroll.
- *Reset Accumulators*: hold the Reset (R) Switch to zero all accumulators and light all display segments. Test mode processing resumes when the Reset Switch is released. Pressing the Reset Switch does not affect billing data.
- *Exit*: hold the Test Switch for 1 second or wait for the programmable Test Mode Timeout period.

2.2.1.6 Frozen Display Mode

The Frozen Display mode stops the Normal Display to draw attention to an Error, Caution, or Diagnostic in the meter.

- *Display Items*: select Errors, Cautions and Diagnostics to freeze the display during MeterMate program development.
- *Initiate*: automatic when the meter detects a frozen Error, Caution or Diagnostic.
- *Scroll*: use a magnet to activate the Display Switch. The meter will perform one Normal Display scroll and then return to the Frozen Display.
- *Exit*: clear the condition that caused the error, caution or diagnostic to return to the Normal Display mode.

2.2.2 Liquid Crystal Display Information

The liquid crystal display (LCD) is shown. The numbered list coincides with the numbers in the figure 2-11.

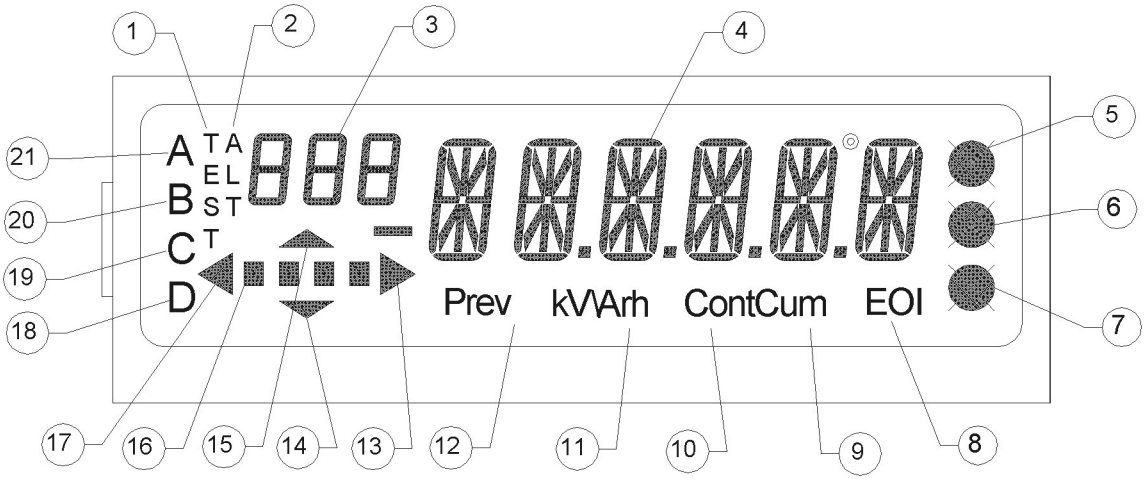

Figure 2-11 Liquid Crystal Display Information

1. The “TEST” annunciator indicates the meter is in Test mode.
2. The “ALT” annunciator indicates the meter is in Alternate Display mode.
3. The three small digits are used to display the current display label or code. “CA” or “Er” appearing in this location indicates a Caution or Error message in the display.
4. These characters display alphanumeric quantities.
   - The open O between the rightmost character and the character to its left is a degree symbol for fundamental lagging phase angles.
   - The short bar to the left of the first large digit indicates a minus sign.
   - There are four possible decimal point positions located between the five rightmost digits.
5. When displayed, the “A” annunciator indicates the “A” voltage is present at the meter. If blinking, “A” voltage is low.
6. When displayed, the “B” annunciator indicates the “B” voltage is present at the meter. If blinking, “B” voltage is low.

TIP *If a voltage annunciator letter is not displayed, that voltage is not expected to be present at the meter for this combination of service and meter form. A voltage that should be present, but isn’t, is treated as a low voltage. Its annunciator blinks.*

7. When displayed, the “C” annunciator indicates the “C” voltage is present at the meter. If blinking, “C” voltage is low.
8. This display indicates an end of interval (EOI) condition.
9. CUM is displayed when the meter is displaying cumulative demand measurements.
10. When CONT and CUM are displayed, it indicates that the meter is displaying continuously cumulative demand measurements.
11. These letters are used to display the units of measure for the quantity currently being displayed. For example, energy displays will have a “kWh” annunciator and Apparent Power will have a “kVA” annunciator. Qhour displays will have no annunciators.
12. This part of the display indicates the previous season or billing period data is being shown.
13. When displayed, this arrow indicates energy is being delivered to the load.
14. When displayed, this arrow indicates VArh are leading.
15. When displayed, this arrow indicates VArh are lagging.
16. The four blocks simulate a disk revolution and are used to display energy flow. One through four blocks indicates 60, 70, 80 and 90% of K_t Watthours respectively. When all four blocks go blank, it indicates a complete cycle (i.e. K_t Watthours).

17. When displayed, this arrow indicates energy is being received from the load.
18. ~21. The letters A through D indicate the Time-Of-Use (TOU) rate that is in effect. Only one letter is displayed at a time when operating in a TOU Mode. If no letters are lit, the meter is in a non-TOU rate.

2.2.3 Display Examples

The following three figures show examples of possible kV2c Meter displays.

2.2.3.1 kWh Display

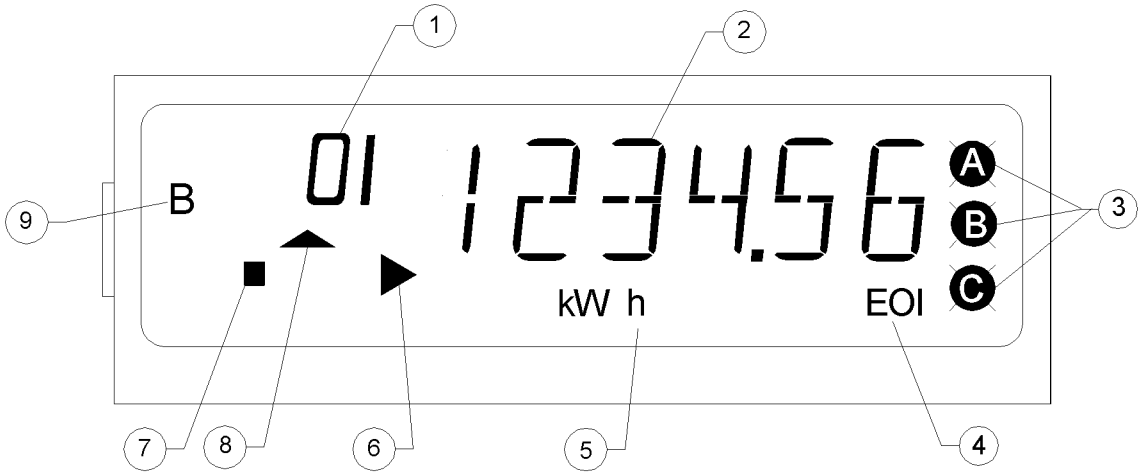

Figure 2-12 kWh Display

Figure 2-12 shows the following conditions:

1. The Display Label is “01”.
2. Six-digit display of energy (kWh).
3. All phases (A, B, C) are present and voltage exceeds the low voltage threshold.
4. End of demand interval indication. This indicator is lit at the end of each demand subinterval.
5. Displayed quantity is measured in kilowatt hours.
6. Energy is being delivered to the load.
7. The one block indicates 60% of K_t Watt hours.
8. Quadergy (kVArh) is lagging.
9. TOU rate B is in effect.

2.2.3.2 Alternate Display Mode

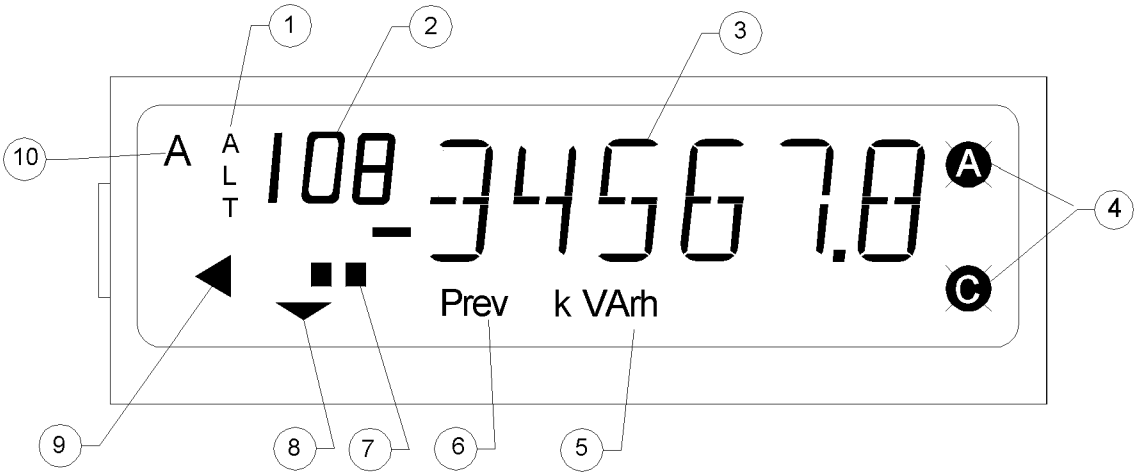

Figure 2-13 Alternate Display

Figure 2-13 shows the following conditions**:**

1. Meter is in Alternate Display mode.
2. Display label “108” is displayed
3. Six-digit previous billing period or season kvarh
4. Phase B voltage is not expected.
5. Displayed quantity is measured in kVArh.
6. Meter is displaying previous billing period or season data.
7. The two blocks indicate 70% of K_t Watt-hours.
8. Quadergy (kVArh) is leading.
9. Energy is being received from the load.
10. TOU rate A is in effect.

2.2.3.3 Test Mode Display

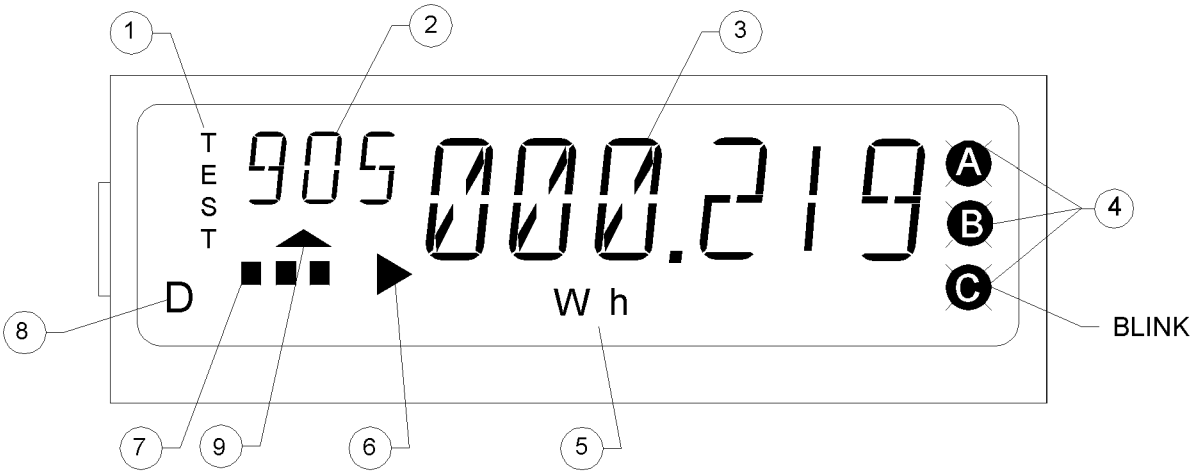

Figure 2-14 Test Mode Display

Figure 2-14 shows the following conditions:

1. Meter is in TEST mode.
2. Display label is “905”.
3. Meter display is a six-digit energy display (Wh) with three digits to the right of the decimal point.

4. A and B phase voltages are present. When a voltage indicator is blinking (C in the figure), it indicates that voltage is low or missing.
5. Meter display is in Watt-hours.
6. Energy is being delivered to the load.
7. The three blocks indicate 60%, 70%, and 80% of K_t Watthours respectively.
8. Time-of-use metering rate D is in effect.
9. Quadergy (kVArh) is lagging.

2.3 Site Genie Monitoring System

The Site Genie Monitor checks the installation, monitors the service after installation, and displays information to alert and diagnose problems.

At power-up, the kV2c meter automatically determines the metered service by examining the phase voltages and the phase angles between the voltages every second. The meter must obtain the same service result from three consecutive tests before selecting the service.

Tip *The service type must be one that can be metered by this meter form for the meter to call it a valid service type. For example, a 36S meter will not consider a four wire delta service a valid service because it is not capable of metering that service. See Table 2-1 for valid service types.*

After the service is determined, it becomes part of the Site Genie display scroll. If the meter does not get three consecutive service results during the first one minute of operation, a service error diagnostic is added to the Site Genie scroll.

The Site Genie Monitoring System automatically identifies the metered service after every power outage. Table 2-1 shows the allowed services for each ANSI S-base and A-base meter form.

As an alternative to automatic service determination, the meter may be programmed for a specific service type. In this case, the meter will always use the programmed service type as the basis for operations. Refer to GEH-7285A, section 10.2.1.1 for more details regarding automatic service determination.

2.3.1 Service Display

As soon as the Site Genie System determines the service, the metered service can be displayed.

Tip *If the meter has not yet determined the service type, it will display “in progress” (INPROG).*

Tip *Use the Site Genie display scroll to make sure the meter has correctly determined the service type. If the meter cannot determine the service type, diagnostic checks are disabled.*

Table 2-2 lists the meter's service displays.

Any attempt to read the service from the meter before the Site Genie Monitor has determined the service causes **INPROG** to be displayed. A service display for a 4-wire Wye service is shown in Figure 2-15 below.

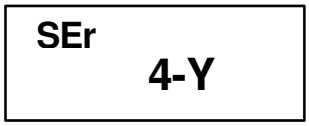

Figure 2-15 Typical Service Display

Table 2-1. Expected Service Types

Meter Form	Meter Construction	Service	Symmetrical Service	Blondel Solution
2S,4S	1 element, 3 wire	1 phase, 3 wire	Yes	No
1S,3S	1 element, 2 wire	1 phase, 2 wire		Yes
9S, 10A, 48A	3 element, 4 wire	3 phase, 4 wire (Wye) 3 phase, 4 wire (Delta)	Yes No	Yes Yes
12S, 13A	2 element, 3 wire	3 phase, 3 wire (Delta) 1 phase, 3 wire network	Yes Yes No	Yes Yes Yes
16S, 16A	3 element, 4 wire	3 phase, 4 wire (Wye) 3 phase, 4 wire (Delta)	Yes No	Yes Yes
36S, 36A	2½ element, 4 wire	3 phase, 4 wire (Wye)	Yes	No
45S, 45A	2 element, 3 wire	3 phase, 3 wire (Delta) 3 phase, 4 wire (Wye) 3 phase, 4 wire (Delta) 1 phase, 3 wire 2 phase, 5 wire	Yes No No Yes No	Yes No No Yes Yes

If the service type display has not been added to the display scrolls, a service error at installation is seen in the Site Genie Display scroll only. If the meter cannot determine the service type, diagnostic errors are disabled.

Table 2-2. Service Displays

Display	Electrical Service
_2-1PH	Single phase, 2 wire
_3-1PH	Single phase, 3 wire
_5-2PH	Two phase, 5 wire
_3-D_	Polyphase, 3 wire(delta)
_4-D_	Polyphase, 4 wire(delta)
_4-Y_	Polyphase, 4 wire(Wye)
_3-N_	Network
INPROG	In Progress
SER_ER	Service Error

A service error display, shown in Figure 2-16 indicates that the meter did not find a stable set of phase voltages that matched any of the expected voltage sets for that meter form. A review of the Site Genie Monitor display of phasor information should explain why the service error occurred.

SEr
SER ER

Figure 2-16: Service Error Display

WARNING *Before leaving the installation, always verify that the service identified by the meter is the type of service desired and that a service error has not occurred.*

2.3.2 Display of Phasor Information

The Site Genie Monitoring System displays circuit information used by the kV2 Meter for individual phase measurements and to determine service type. This information is also used for some of the diagnostic displays and counters. The information in the Site Genie Display scroll can often be used to determine why an installation error or diagnostic error has occurred.

The 26 displays that make up the Site Genie display scroll can be grouped as follows:

- Service type
- Voltage phase angles, A, B, C
- Voltages, A, B, C
- Current phase angles A, B ,C

- Currents, A, B, C
- Power Factors (active and distortion)
- Diagnostic counters 1 – 8

2.3.2.1 Starting the Site Genie Display Scroll

The Site Genie Display scroll is started by holding a magnet to the right of the alternate display switch indicator on the bezel of the meter. Holding the magnet to the bezel for at least 3 but less than 6 seconds causes the meter to enter the Alternate Display mode. Holding the magnet to the bezel for more than 6 seconds causes the meter to enter the Site Genie Display scroll. See Figure 2-10.

2.3.2.2 Site Genie Display Scroll

Table 2-3 lists the items displayed in the Site Genie Display scroll. The table shows the order of the displayed items and the label used with each display. Table 2-4 defines the displayed service label Phase notations.

Table 2-3. Site Genie Display Scroll

Label	Value
SER	**Service Label**
PhA	**Voltage Angle A**
PhA	**Voltage Magnitude A**
PhA	**Current Angle Phase A**
PhA	**Current Magnitude Phase A**
PhB	**Voltage Angle Phase B**
PhB	**Voltage Magnitude Phase B**
PhB	**Current Angle Phase B**
PhB	**Current Magnitude Phase B**
PhC	**Voltage Angle Phase C**
PhC	**Voltage Magnitude Phase C**
PhC	**Current Angle Phase C**
PhC	**Current Magnitude Phase C**
PF_	**Power Factor**
dPF	**Distortion Power Factor**
d1_	**Diagnostic Counter 1**

Label	Value
d2_	**Diagnostic Counter 2**
d3_	**Diagnostic Counter 3**
d4_	**Diagnostic Counter 4**
d5_	**Diagnostic Counter 5**
d5A	**Diagnostic Counter 5 Phase A**
d5B	**Diagnostic Counter 5 Phase B**
d5C	**Diagnostic Counter 5 Phase C**
d6_	**Diagnostic Counter 6**
d7_	**Diagnostic Counter 7**
d8_	**Diagnostic Counter 8**

2.3.2.3 Phase Voltage and Current Conventions

The per-phase information displayed by the Site Genie Monitor is referenced to the internal voltage and current sensors of the meter, filtered to the fundamental frequency component. The meter defines each phase in terms of meter elements.

2.3.2.3.1 Phase Notation

Table 2-4. kV2c Meter Phase Notation shows the convention used by the Site Genie Monitoring System and within this book to describe service phases and meter elements.

Table 2-4. kV2c Meter Phase Notation

Display Label	Defined Phase	Meter Element
PhA	**Phase A**	**Left-hand element**
PhB	**Phase B**	**Center element**
PhC	**Phase C**	**Right-hand element**

Figure 2-17 shows two typical examples of how the phase labeling convention is used. The drawings assume that you are looking at the face of the meters as they sit in a socket.

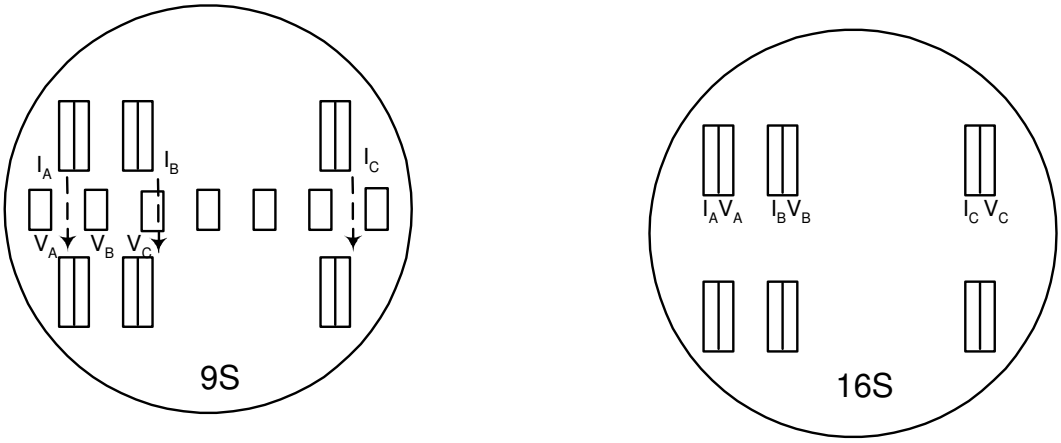

Figure 2-17 Phase Notation

2.3.2.3.2 Angle and Rotation Conventions

The Phase A voltage is the reference for angular measurements. All angles are measured as lagging from the Phase A voltage. Unless shown otherwise, phase rotation is counterclockwise; therefore, positive angles measure the amount of lag from the Phase A voltage. Figure 2-18 illustrates these conventions.

TIP *The Site Genie Monitor uses the Phase A voltage as a reference point; therefore, the Phase A voltage angle is always 0.0 degrees.*

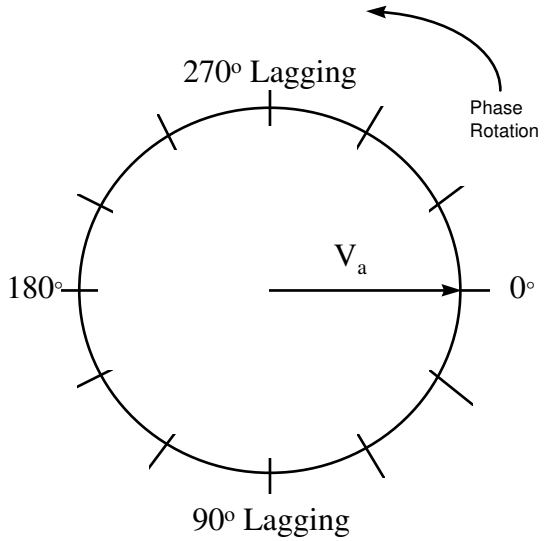

Figure 2-18: Phase Angle Conventions

2.3.2.4 Phase Voltage and Current Displays

Figure 2-19 shows typical Site Genie Phasor information for a form 16S meter installation as it appears on the display of a kV2c Meter.

	Phase A, Left Element	Phase B, Center Element	Phase C Right Element
Voltage Phase Angle	PhA 0.0° V	Phb 120.2° V	PhC 240.1° V
Phase Voltage	PhA 120.8 V	Phb 120.1 V	PhC 121.2 V
Current Phase Angle	PhA 9.8 ° A	Phb 126.0 ° A	PhC 243.8 ° A
Phase Current	PhA 36.7 A	Phb 42.2 A	PhC 29.2 A

Figure 2-19: Phasor Display Examples

The phasor information is most easily analyzed by plotting on a phasor diagram. Comparing the actual phasor diagram with the expected diagram for the service shows phase sequence and the sources of service wiring errors. Typical errors, such as polarity errors on transformers or mismatching currents and voltages, are easily diagnosed using the phasor diagram.

Phase sequence is determined by rotating the phasors counterclockwise and observing the order they would rotate through zero. In Figure 2-20, if the phasors are stationary, A is at zero. Rotating V_B and V_C counterclockwise, phase B next moves through zero followed by C. This indicates ABC phase sequence.

TIP *For CBA rotation, A is at zero, but when the phasors are rotated counterclockwise, A is followed by C and then B.*

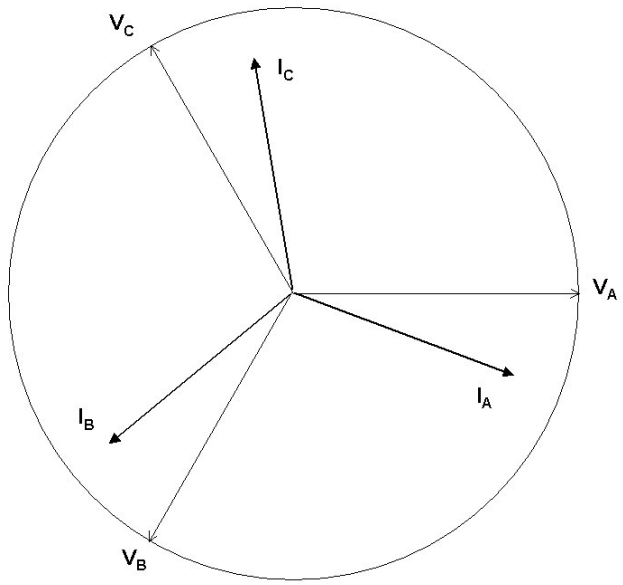

Figure 2-20: Phasor Diagram

Looking at the Figure 2-20, we can make the following observations about the circuit and installation:

- All phase currents are lagging.
- Phase voltage and current angles are as expected for a Wye installation; therefore, there are no apparent wiring errors.

2.3.3 Diagnostic Displays

Site Genie diagnostics provide continuous monitoring of the meter installation. They report on, and keep a count of, unexpected operating conditions (unless disabled by the meter's program). Diagnostic checks are performed every five seconds, except for Diagnostics 6 & 7, which are checked every second. If a diagnostic check fails a programmable number of consecutive tests (minimum of 3), the diagnostic display is added to the normal display scroll and the counter in the Site Genie scroll is incremented. Refer to Table 2-5 for a list of diagnostic displays and the meaning of the display.

Table 2-5. Site Genie Diagnostics

Diagnostic Test	Display
Polarity, Cross-Phase & Energy Flow Phasors must agree with service type.	**Diag 1**
Voltage Imbalance (%) Phase voltages must maintain acceptable agreement.	**Diag 2**
Inactive Phase Current All required phase currents must be above or below the defined threshold.	**Diag 3**
Imbalance (degrees) Phase angles between phase voltages and currents must not exceed limit.	**Diag 4**
Distortion (Total and per phase) (max. %) and DC Detection Distortion measurements must be below defined maximum.	**Diag 5** **A, B, C**
Under voltage (% below nominal) Phase A voltage must be above defined minimum.	**Diag 6**
Over voltage (% above nominal) Phase A voltage must be below defined maximum.	**Diag 7**
High Neutral Current Calculated neutral current must be below defined maximum.	**Diag 8**

MeterMate software provides several options for handling diagnostic errors. Each diagnostic may be enabled or disabled. If the diagnostic is enabled, then it may be added to the normal display scroll or suppressed. When added to the display scroll, the diagnostic may become part of the normal scroll or may freeze the display.

2.3.3.1 Diagnostic Limits

The limits for the diagnostic tests are set as part of the meter program. Specific voltage levels and services need not be set in the program. The Site Genie Monitor senses the service type and voltage. Diagnostic limits are set as variances (usually in percentages) from the nominal values.

TIP *Diagnostic tests are disabled during series testing and Test Mode operation. This is done to allow normal testing of the meter without generating diagnostic displays and counts.*

2.3.3.2 Setting and Clearing of Diagnostics

Diagnostic conditions are checked every 5 seconds except for over- and under- voltage diagnostics, which are checked every second. The condition must remain out-of-limits for a programmed period of time (15 seconds to 30 minutes in 5-second increments) before a diagnostic condition is set in the meter. After the diagnostic condition is set, the meter displays the diagnostic and increments the diagnostic counter. The diagnostic is not armed again until two consecutive tests indicate conditions are within limits. Diagnostics

programmed to be part of the display scroll will be displayed as long as the condition is present.

The counters freeze at 255 until reset. Diagnostic counters may be reset using the Master Reset command in MeterMate DOS (answer NO to the first prompt, respond appropriately to subsequent prompts).

Extended diagnostic conditions are counted only once. For example, at an industrial plant, the voltage drops below limits at 8 a.m. and stays low until 3 p.m. Later the voltage goes above limit from 7 p.m. until 6 a.m. Only one under voltage and one over voltage diagnostic count is recorded.

2.3.3.3 Problem Detection

Table 2-6 lists the typical problems detected by each of the diagnostic tests. A detailed description of each test follows immediately after the table.

Table 2-6. Problem Detection with Diagnostic Tests

Diagnostic Test		Typical problems detected
d1	Polarity, Cross-phase, and Energy Flow Check	▪ Cross-phasing of a voltage or current circuit ▪ Incorrect polarity of voltage or current circuit ▪ Reverse energy flow ▪ Wiring error
d2	Voltage Imbalance	▪ Loss of a phase voltage ▪ Incorrect voltage transformer ratio ▪ Blown fuse - voltage transformer ▪ Incorrect phase voltage ▪ Wiring error
d3	Inactive Phase Current	▪ Shorted current transformer ▪ Wiring error ▪ Tampering or current diversion ▪ Shorting bar or by-pass closed in socket
d4	Current Imbalance or Displacement	▪ Poor power factor ▪ Imbalanced load

d5	Distortion	▪ DC current
		▪ Non-linear load created distortion
		  ▪ SCR and TRIAC motor controls
		  ▪ Switching power supplies
		  ▪ Reciprocating pumps

d6	Under Voltage	▪ High load ▪ Voltage regulation ▪ High system impedance ▪ Blown fuse ▪ Wrong VT ratio
d7	Over Voltage	▪ Capacitor banks ▪ Voltage regulation ▪ Blown fuse ▪ Wrong VT ratio
d8	High Neutral Current	▪ Third harmonic distortion adding in neutral ▪ Switching power supplies in PCs, copiers, fax machines ▪ Large single phase loading.

2.3.3.4 Description of Diagnostic Tests

There are eight diagnostic tests performed by the Site Genie Monitor. Each is described in the following paragraphs.

2.3.3.4.1 Automatically Determined Reference Voltage

The reference voltage used for the under and over voltage diagnostics and the voltage annunciators in the display is determined at power-up. This is accomplished by measuring the Phase A voltage and classifying the service as 120V, 277V, or 346V Wye, or 120, 240, or 480V Delta or Single Phase. The reference voltage may be overridden by programming a specific reference voltage.

2.3.3.4.2 Diagnostic Test 1—Polarity, Cross-phase, and Energy flow

Purpose:	Tests the phase angle relationships of the voltage and current phasors for each element against what is expected for the service.
Frequency:	Every 5 seconds using the data from the previous second.
Test:	Voltage phase angles must be within ±10° of the expected phase angle. Current phase angles must be within ±120° of the expected phase angle at unity PF (assuming a 3-phase load on polyphase meters).
Set:	Fails all tests during the programmed time period (15 seconds to 30 minutes in 5-second increments)
Clear:	Passes 2 consecutive tests.
Exceptions:	The diagnostic is not performed when service detection is in progress, a service error is present, or the meter is in Test Mode.

TIP *The diagnostic counter freezes at 255. Use the MeterMate DOS Master Reset command to clear the counter (answer NO to the first prompt, respond appropriately to subsequent prompts).*

2.3.3.4.3 Diagnostic Test 2—Voltage Imbalance

Purpose:	Verifies that the magnitude of the phase B & C voltages are within tolerance of the magnitude of the phase A (reference) voltage, taking into account the meter form and service.
Frequency:	Every 5 seconds using the data from the previous second.
Test:	Voltage magnitudes must be within ± the programmed tolerance of the expected voltage magnitude. Normal differences, such as the high leg on a 4-wire delta, are automatically accounted for by the test (V_C is expected to be 1.732 times V_A).
Tolerance:	User specified, 0% - 100% in 1 percent increments.
Set:	Fails all tests during the programmed time period (15 seconds to 30 minutes in 5-second increments)
Clear:	Passes 2 consecutive tests.
Exceptions:	The diagnostic is not performed when service detection is in progress, a service error is present, or the meter is in Test Mode.

TIP *The diagnostic counter freezes at 255. Use the MeterMate DOS Master Reset command to clear the counter (answer NO to the first prompt, respond appropriately to subsequent prompts).*

TIP *The high and low voltage diagnostics (D6 and D7) monitor range of the service voltage based on the Phase A voltage input. D2 monitors voltage imbalance. D2 tells you if phase B and phase C are out of limit relative to the phase A service detect voltage.. If V_B or V_C are changing and move more than T% (T = tolerance) away from the phase A service detect voltage, then a Diagnostic 2 alert occurs.*

2.3.3.4.4 Diagnostic Test 3—Inactive Phase Current

This test should be used only for situations where continuous polyphase currents are expected. Circuits with only single-phase loads may generate diagnostics.

Purpose:	Catch shorted current circuits or unbalanced loading.
Frequency:	Every 5 seconds using the data from the previous second.
Test:	Checks the magnitude of the phase currents for any fall below the minimum threshold (at least one other phase must be above the threshold).
Tolerance:	0.1 – Class Amps in 0.1 Amp increments.
Set:	Fails all tests during the programmed time period (15 seconds to 30 minutes in 5-second increments)
Clear:	Passes 2 consecutive tests.
Exceptions:	The diagnostic is not performed when service detection is in progress, a service error is present, or the meter is in Test Mode.

TIP *The diagnostic counter freezes at 255. Use the MeterMate DOS Master Reset command to clear the counter (answer NO to the first prompt, respond appropriately to subsequent prompts).*

2.3.3.4.5 Diagnostic Test 4—Current Phase Angle

Purpose:	Apply tighter tolerances on current phase angles than the limits used in Diagnostic 1. It verifies that the current phase angles fall within the specified range of the expected value for the service.
Frequency:	Every 5 seconds using the data from the previous second.
Test:	Checks that the current phase angle is within (+/-) the programmed tolerance of the expected phase angle at unity PF (assuming a 3-phase load on a polyphase meter).
Tolerance:	0° to 120° in 1° increments
Set:	Fails all tests during the programmed time period (15 seconds to 30 minutes in 5-second increments)
Clear:	Passes 2 consecutive tests.
Exceptions:	The diagnostic is not performed when service detection is in progress, a service error is present, or the meter is in Test Mode. Diagnostic 1 must pass and the measured current must be greater than 0.5% of class for the test to be performed.

TIP *The diagnostic counter freezes at 255. Use the MeterMate DOS Master Reset command to clear the counter (answer NO to the first prompt, respond appropriately to subsequent prompts).*

2.3.3.4.6 Diagnostic Test 5—Total, A, B, C Distortion and DC Detection

Purpose:	Identify loads that generate excessive distortion or DC currents.
Frequency:	Every 5 seconds using the data from the previous second.
Test:	The meter will perform one of the following distortion measurements: Distortion Power Factor (DPF) Total Harmonic Voltage Distortion (VTHD) per element only Total Harmonic Current Distortion (ITHD) per element only Total Demand Distortion (TDD) per element only DC Detection Checks that the total (DPF only) and per phase distortion does not exceed the programmed tolerance. DC presence is sensed by measurement of the second harmonic content in the measured current waveform. Detection of this condition causes the meter diagnostic condition, d5, distortion, to be set. D5 is set when the total current level and second harmonic level are high enough for saturation to be possible, and the ratio of second harmonic current to total current exceeds programmed tolerance.
Tolerance:	0% to 100% in 1% increments.
Set:	Fails all tests during the programmed time period (15 seconds to 30 minutes in 5-second increments)
Clear:	Passes 2 consecutive tests.
Exceptions:	The diagnostic is not performed when service detection is in progress, a service error is present, or the meter is in Test Mode. The diagnostic is not performed if the previous momentary interval demand (programmable choice of kW / kvar / kVA / kQ) does not exceed the programmed threshold.

TIP *The diagnostic counter freezes at 255. Use the MeterMate DOS or MMCOMM Master Reset command to clear the counter (answer NO to the first prompt, respond appropriately to subsequent prompts).*

2.3.3.4.6.1 Distortion Power Factor

Distortion Power Factor is very good at identifying distortion sources and avoids penalizing others because distortion power is usually a result of non-linear loads. Linear loads typically do not have any distortion power even when harmonics are present.

Distortion Power Factor is the ratio of distortion power to apparent power. Distortion Power Factor tells us how much of the apparent power is explained by distortion power. Active Power Factor (PF) plus Reactive Power Factor (RF) and Distortion Power Factor (DPF) completely explain apparent power. Because these power factors are vector quantities, they add as shown in Equation 2-1.

$$\sqrt{PF^2 + RF^2 + DPF^2} = 1$$

Equation 2-1. Power factor Relationships

This is true because of the way the power vectors are defined. By definition, the square of apparent power is equal to the sum of the squares of active power, reactive power, and distortion power as shown in Equation 2-2. In the equation, U = Apparent Power, P = Active Power, Q = Reactive Power and D = Distortion Power.

$$U^2 \equiv P^2 + Q^2 + D^2$$

Equation 2-2. Apparent Power Definition

Typically, the limit used for this test is the same limit used by your power quality group for Current THD. Typical limits are between 15 and 30 percent. Distortion Power Factor usually closely follows current THD through the usable part of current THD's range (5% to 80%). This is because current distortion is usually much larger than voltage distortion and overwhelms the effects of voltage distortion.

2.3.3.4.7 Diagnostic Test 6—Under Voltage Test

Purpose:	Monitors the value of the phase A voltage.
Frequency:	Every 1 second.
Test:	Checks that the magnitude of the phase A voltage is above the reference voltage minus the programmed tolerance. The meter automatically determines the reference voltage based on the service type and input voltage magnitude (120V, 240V, 277V, 346V or 480V) unless a reference voltage is programmed into the meter.
Tolerance:	0% to 100% in 1% increments
Set:	Fails all tests during the programmed time period (3 seconds to 30 minutes in 1-second increments)
Clear:	Passes 2 consecutive tests.
Exceptions:	The diagnostic is not performed when service detection is in progress, a service error is present, or the meter is in Test Mode.

TIP *The diagnostic counter freezes at 255. Use the MeterMate DOS Master Reset command to clear the counter (answer NO to the first prompt, respond appropriately to subsequent prompts).*

TIP *The high and low voltage diagnostics (D6 and D7) monitor range of the service voltage based on the Phase A voltage input. D2 monitors voltage imbalance. D2 tells you if phase B and phase C are out of limit relative to the phase A voltage.. If V_B or V_C are changing and move more than T% (T = tolerance) away from the phase A voltage, then a Diagnostic 2 alert occurs.*

2.3.3.4.8 Diagnostic Test 7—Over Voltage Test

Purpose:	Monitors the value of the phase A voltage.
Frequency:	Every 1 second.
Test:	Checks that the magnitude of the phase A voltage is below the reference voltage plus the programmed tolerance. The meter automatically determines the reference voltage based on the service type and input voltage magnitude (120V, 240V, 277V, 346V or 480V) unless a reference voltage is programmed into the meter.
Tolerance:	0% to 100% in 1% increments
Set:	Fails all tests during the programmed time period (3 seconds to 30 minutes in 1-second increments)
Clear:	Passes 2 consecutive tests.
Exceptions:	The diagnostic is not performed when service detection is in progress, a service error is present, or the meter is in Test Mode.

TIP *The diagnostic counter freezes at 255. Use the MeterMate DOS Master Reset command to clear the counter (answer NO to the first prompt, respond appropriately to subsequent prompts).*

TIP *The high and low voltage diagnostics (D6 and D7) monitor range of the service voltage based on the Phase A voltage input. D2 monitors voltage imbalance. D2 tells you if phase B and phase C are out of limit relative to the phase A voltage.. If V_B or V_C are changing and move more than T% (T = tolerance) away from the phase A voltage, then a Diagnostic 2 alert occurs.*

2.3.3.4.9 Diagnostic Test 8—High Imputed Neutral Current

The meter does not measure the actual neutral current. It calculates the neutral current from the measured currents.

Purpose:	Monitors the imputed neutral current.
Frequency:	Every 5 seconds using the data from the previous second.
Test:	Checks that the magnitude of the imputed neutral current is below the programmed tolerance.
Tolerance:	0 – Class Amps in 0.1 Amp increments.
Set:	Fails all tests during the programmed time period (15 seconds to 30 minutes in 5-second increments)
Clear:	Passes 2 consecutive tests.

Exceptions:	The diagnostic is not performed when service detection is in progress, a service error is present, or the meter is in Test Mode. Disabled for Form 45 and 56 meters used in a 4-wire wye or 4-wire delta service.

TIP *Triplen currents add in the neutral. The triplens are the harmonics that are simply multiples of three times the fundamental. The third, sixth, and ninth harmonics are examples of triplens. For example, if there are large third harmonic currents in the phases, the neutral current can be higher than the individual phase currents.*

2.3.3.5 Diagnostic Output

The Site Genie diagnostics can also be used to control switches on a meter's I/O board. All diagnostics are supported and can drive several (any or all) solid- state relay (SSR) outputs on the I/O board. The outputs may be a Form A or Form C outputs. (See the I/O board specifications for ratings.)

MeterMate programming software allows the user to select which diagnostics will control which outputs. Any or all of the diagnostics can be selected to activate any or several outputs. If any of the selected diagnostic conditions which are mapped to a specific output occur, then that output is activated.

TIP *Diagnostic events can also be recorded using the optional Event Recorder, enabled with the E soft switch, to determine the date/time when diagnostics occur. The meter must be operating in a Demand/LP or TOU mode for date/time information to be captured.*

3. Maintenance Instructions

WARNING: The information contained within this document is intended to be an aid to qualified metering personnel. It is not intended to replace the extensive training necessary to install or remove meters from service. Any work on or near energized meters, meter sockets, or other metering equipment presents the danger of electrical shock. All work on these products must be performed by qualified industrial electricians and metering specialists only. All work must be done in accordance with local utility safety practices and the procedures outlined in the current edition of the Handbook for Electricity Metering. The handbook is available from the Edison Electric Institute, 701 Pennsylvania Avenue N.W., Washington D.C. 20004-2696.

3.1 Recommended Procedures

The procedures described on the following pages are those recommended by the General Electric Company. Any procedures not described herein or referenced herein are not recommended.

3.1.1 Meter Testing Tools

The meter is equipped with a light-emitting diode (LED) for calibration and a liquid crystal display with disk analog and test displays. The calibration LED is part of the OPTOCOM port as shown in Figure 3-1.

3.1.1.1 Calibration LED

The OPTOCOM LED emits calibration pulses (infrared light) until the meter detects the presence of OPTOCOM communications. This LED is the source of Watthour and VArhour calibration pulses. Each calibration pulse is equal to the value assigned to Kt (Watthours or VArhours). The duration of each output pulse is approximately 25 milliseconds.

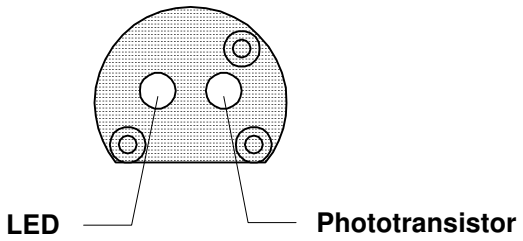

Figure 3-1: OPTOCOM Port

The default unit for the calibration pulses is Watthours. The meter may be switched to VArh calibration pulses using MeterMate software.

3.1.1.2 LCD Display

The meter display has annunciators for quadrant, phase voltage, and energy flow indication as shown in Figure 3-2. The annunciators provide valuable information during the testing process.

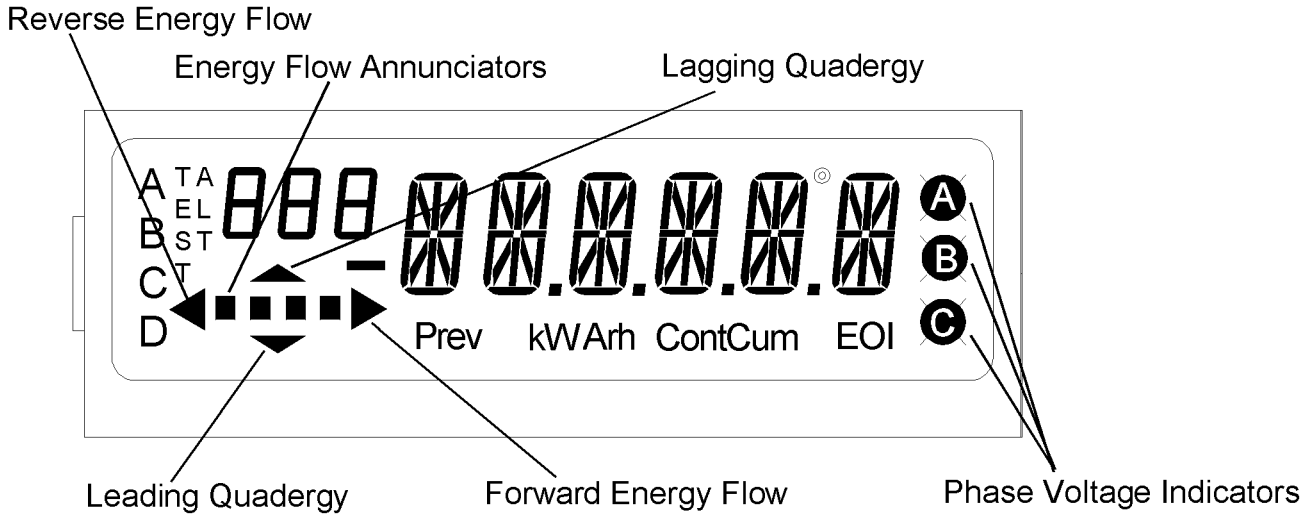

Figure 3-2: Liquid Crystal Display

Quadrant annunciators—The left and right arrows indicate reverse and forward energy flow, respectively. An up arrow indicates lagging quadergy (varh), and a down arrow indicates leading quadergy (varh). These arrows can be used to determine the quadrant in which the meter is currently operating.

Phase voltage—Three annunciators labeled A, B, and C are used to indicate the presence of voltage on their respective phases. If the annunciator is not displayed, there is no meter element in that phase or no phase voltage is expected for the metered service. For example, a 2 or 2½ element meter will show only A and C phases. If an expected voltage is low (below the value programmed into the meter [see Diagnostic Test 6 and Diagnostic Test 2]), the phase indicator blinks.

Energy flow annunciators—A series of four display segments are used to indicate the direction and relative quantity of energy flow (Disk analog). As energy flows from the line to the load, the segments will be energized, sequentially, from left to right. The segments are lighted respectively when accumulated energy equals 60%, 70%, 80%, and 90% of Kt watthours. All segments turn off when 100% of Kt watthours are accumulated. Conversely, as energy flows from the load to the line, they will be sequenced from right to left. The rate at which the segments are energized is inversely proportional to Kt. One complete cycle of four segments indicates that Kt Watthours of energy have been measured.

3.2 Test Mode

Test mode allows the meter to be tested without disturbing billing data or setting a new maximum demand. The Test Mode performs the same function as setting the pointers back on an electromechanical meter after testing.

The Test mode may be entered by pressing the test switch for 1 second or by using MeterMate software commands. The test mode switch is operated by removing the Lexan cover and pushing the test switch (switch marked T on the bezel).

3.2.1 Starting the Test Mode

To enter the test mode: use the test switch on the face of the meter or MeterMate Meter Comm. (MMDOS or MMCOMM in Metermate 5.00) commands.

Upon entering the test mode, several actions occur:

- The current demand interval is terminated.
- All outputs programmed to be active remain active.
- All test accumulators are set to zero.
- The subinterval countdown timer starts.
- LP recording is suspended, and LP interval status bits reflect test mode was in effect during affected interval(s).

When the test mode begins, the test annunciator is lit and the first item programmed for display is displayed.

3.2.2 While in Test Mode

The same selected measurement profile quantities (data accumulations) that are calculated during normal operation are calculated in test mode. The selection of which quantities are to be displayed in test mode is fully programmable in the MeterMate™ software. However, watthour, varhour, volt-ampere-hour, and q-hour quantities are displayed in units rather than kilo-units; i.e. the data is displayed as Wh, VArh, Vah and Qh rather than kWh, kVArh, kVAh and kQh. The same demand values calculated during normal operation are also calculated in test mode. The display formats for the demands are the same in test mode as they are in normal mode.

3.2.2.1 Energy Calculations

If the metering constants are not programmed, default values are used. Table 3-1 contains the default test mode values.

Table 3-1. Default Test Mode Values

Constant	Default Value
Demand decimal position	Same as non-test mode
Demand interval length	15 minutes
Demand subinterval length	5 minutes
Energy display format	XXX.XXX
Number of demand subintervals	3
Power line frequency	60

The display does not scroll while in test mode. Each item remains displayed until the display switch is activated with a magnet. At that time, the next item in the display program is shown. The quantity displayed is updated every second.

The test mode display is fully programmable. Table 3-2 lists the default test mode display items for an unprogrammed meter. Items can be added or deleted using MeterMate software.

Table 3-2. Test Mode Default Display

Display ID	Display Quantity
94	Accumulating Wh
95	Previous interval kW demand
91	Time remaining in subinterval (MM SS)
92	Momentary interval demand
93	Maximum test kW demand

3.2.2.1 Displays Available in Test Mode Only

The following display items are available for display only in the test mode:

- Test mode maximum demands
- Time remaining in test demand interval in block demand only
- Time remaining in test demand subinterval in rolling demand only
- Test mode data accumulations
- Test mode accumulating demand

3.2.2.2 Test Reset

A test reset is initiated by pressing the reset switch while in the test mode. A test mode reset causes all test quantities to be reset to zero and a new subinterval to be started. An all-segments display is shown until the reset switch is released. The item displayed when the reset occurred remains in the display, but the value will be initialized.

In the event of a power outage, data for test mode energy, demand, and power factor are not saved. These data are reset when power returns. Upon power up, the meter remains in test mode and the item displayed when the outage occurs, remains on the display. In a TOU meter or demand meter with load profiling, there may be a slight delay before re-entering test mode on power up. During the delay, the meter is performing its catch-up tasks.

3.2.2.3 Exiting Test Mode

Test mode is exited in one of three ways:

1. By pressing and holding the test switch for more than 1 second
2. By an MMDOS or MMCOMM command
3. By the test mode time-out timer

All test mode data is lost when test mode is exited. Upon exiting test mode in a meter programmed for rolling demand, a new, possibly partial, subinterval is started. The past subinterval as well as the current subinterval is zeroed. Upon returning to the normal operating mode, a TOU meter or demand meter with load profiling will complete the time remaining in the current partial subinterval such that subsequent subintervals will be synchronized with the midnight boundary. The new subinterval in the demand only mode is the number of minutes that was remaining in the subinterval prior to entering test mode.

For meters that are programmed for thermal emulation, the thermal demand reading is set to zero immediately after test mode is exited.

The meter will automatically exit the Test Mode when the time in the Test Mode Time has exceeded its programmed limit. This Test Mode time limit prevents accidentally leaving the

meter in the test mode and losing billing information. The test mode time-out function is programmable from 1 minute to 99 hours.

Note: Normal billing & LP data accumulation is suspended during test mode operation. Upon exiting test mode accumulation of billing & LP quantities will resume from the values in place when test mode was entered.

3.3 Field Accuracy Test

The test mode allows the meter to be accuracy tested in the field without disturbing any billing data.

3.3.1 Field Testing With Test Mode

Testing the meter in the field can be accomplished three ways in the test mode by using the:

1. Maximum demand reading in the display
2. Disk analog display
3. Instantaneous demand feature of the kV2c

3.3.2 Maximum Demand Reading Testing

This is the most accurate of the three test methods. For this test, you need a portable standard with a start/stop switch and a phantom load.

1. Make sure that the voltage coils are in parallel and the current coils are in series.
2. Connect the phantom load and the portable standard to the meter to be tested.
3. Apply voltage to the meter and the standard and wait 20 seconds for settling time.
4. Put the meter into test mode.
5. Change the display to maximum demand (display ID 93 using the default display items).
6. Switch on the desired current.
7. Check the flow indicator on the meter to make sure that the polarity is correct.
8. Reset the standard.
9. Simultaneously reset the meter and start the standard. The test reset takes effect when switch is released.
10. Turn the current off when the end-of-interval (EOI) annunciator comes on.
11. Compare the meter readings with the standard's readings. EOI comes at the end of every subinterval; numbers won't match before interval is completed and display is updated. Where rolling demand is used (n sub intervals making up a complete demand interval) the display value needs to be multiplied by n for comparison to the standard value.

3.4 Disk Analog Testing

The disk analog provides a precise means of checking the calibration of the meter. There are some practical limits to this method of testing. For example, if the load on the meter is very low, the test may take a long time. Conversely, if the load is high, it may be difficult to accurately time the switching of the standard.

The disk analog in the kV2c works as follows:

- The first segment is lit when 60% of Kt Watt hours have accumulated.
- The second segment is lit (with the first segment remaining lit) when 70% of Kt Watt hours have accumulated.
- The third segment is lit (with the first and second segment remaining lit) when 80% of Kt Watt hours have accumulated.
- All segments are lit when 90% of Kt Watt hours have accumulated.
- All segments are turned off when 100% of Kt Watt hours have accumulated.
- The cycle then restarts, with the first segment being lit when another 60% of Kt Wh has accumulated.

For this test you need a portable standard with a start/stop switch. Field testing using the disk analog allows you to check the calibration of the meter without having to install a phantom load.

1. Make sure the voltage coils are in parallel and the current coils are in series.
2. Connect the portable standard to the meter.
3. Reset the standard.
4. Observe the disk analog. Each cycle of the disk analog represents Kt Watt hours of accumulation. (The Kt value is printed on the meter nameplate.)
5. When the disk analog transitions from all segments on to all segments off, start the standard.
6. Let the disk analog scroll through a predetermined number of times (10, for example).
7. Stop the standard when the disk analog transitions from all segments on to all segments off for the desired number of times.
8. Calculate the accumulated Watt hours as shown in Equation 3-1.

$$\textit{Accumulated Energy} = (Kt) \times (\textit{the number of complete disk analog cycles})$$

Equation 3-1. Accumulated Watt-hours Calculation

For example: if Kt equals 3 and 10 complete cycles were counted, then:

3 Wh x 10 complete scrolls = 30 Wh.

9. Compare the results of the calculation to the reading on the standard.

3.5 Shop Test

Shop testing consists of verifying the meter's accuracy.

Caution POLYPHASE TESTING OF kV2c METER

The kV2c meter is designed to meter conventional services with nominal line-to line voltages up to 480 Volts for meters rated 120-480 Volts or line-to-line voltages up to 208 Volts for meters rated 69(57)-120V. Operation at voltages more than 10% above these ratings can lead to shortened life or failure.

***Do not** apply polyphase test voltages, using "Wye" test conditions, at voltages higher than 305 Volts line-to-neutral (277V + 10%) for 120-480V rating; no higher than 132 Volts line-to-neutral (120V +10%) for 57-120V rating*
*Meter forms 9S, 10A, 36S, 48A, 16S or 16A rated 120-480V **without Revenue Guard Boards** may be applied in 600/345V "Wye" services. Polyphase "Wye" test voltages applied to these meters must not exceed 380V line-to-neutral (345V +10%)*

***For example,** polyphase testing with 480 Volt "Wye" line-to-neutral conditions will result in voltages **in excess of 800 Volts** being applied to the meter. Stresses of this magnitude can result in immediate failure of the meter and/ or shorten meter life.*

3.5.1 Meter Shop Equipment

The meter loading equipment must be capable of maintaining accuracy while supplying energy to the meter's broad range switching power supply. Otherwise, meters may be tested in any shop that meets the requirements outlined in the current editions of the *Handbook for Electricity Metering* published by the Edison Electric Institute and the American National Standard Code for Electricity Metering.

3.5.1.1 Equipment Setup

The meter mounting equipment and its electrical connections must be used as required for the meter form number on the meter nameplate. If required for the test equipment used, the test link(s) must be opened.

3.5.1.2 Testing

The Watthour constant (Kh) of a meter is defined as *Watthours per disk revolution*. Because electronic meters do not rely on disk revolutions to measure energy, Kh is not a meaningful unit of measure in the GE kV2c Meter. Kh is printed on the meter label as a reference to an equivalent electromechanical meter as required by applicable meter standards. *It has no practical application in the operation of the kV2c Meter.*

3.5.2 Test Constant

The meter test constant (Kt) is the number of Watthours per calibration pulse. Typically the kV2c Meter is tested like an electromechanical meter, using a Kt value equal to a standard Kh value as printed on the meter label.

To simplify and speed up testing, you may want to use Kt values different from the traditional Kh values used with electromechanical meters. For example, a Kt of 0.3 for transformer-rated meters and 3.0 for self-contained meters would significantly speed up testing and

dramatically reduce the number of test constants used. These values (0.3 and 3.0) are the smallest values that test the complete operating range of the meter (up to 480V and class load). However, smaller values are possible if you are willing to restrict the test range. The test pulse duration of 25 milliseconds limits the minimum Kt value to a value large enough that the Test LED is not lit continuously at the maximum test load.

NOTE: Changing the value of Kt does not affect meter readings or measurements. Changing Kt affects only the speed at which test pulses are generated. Smaller Kt values produce more test pulses and reduce test time. Test times shorter than 30 seconds are not recommended as shorter times can cause significant variability in test system results.

The wide voltage range capability of the kV2c meter let's you replace several ratings of traditional electromechanical meters with one 120 Volt to 480 Voltmeter. Each of these traditional voltage rating had a separate Kh. This means that we have several choices for Kt when testing a kV2c meter like a traditional electromechanical meter. The following recommendations should be kept in mind when selecting Kt.

1. Select the smallest practical Kt. Larger Kt values only slow down testing and do not increase test accuracy or change the test range.
2. If testing like an electromechanical meter use a Kt that matches the 120 Volt Kh for that meter. The meter can still be tested over the complete voltage range and will test faster than if the 480 Volt Kh is chosen.

Table 3-3 Allowable Kt Range of Values

	57-120V	120-480V
CL 20	**0.15 — 1.6**	**0.3 — 4.0**
CL 150, or 200	**1.5 — 16**	**3.0 — 40**
CL 320	**2.1 — 24**	**4.5 — 60**

Note: The maximum Kt values shown in Table 3-3 *should not be exceeded. Exceeding these values may produce testing errors.*

3.5.3 Watthour Test Procedure

To test the meter, proceed as follows:

1. Note the meter Kt value listed on the nameplate.
2. Select the desired voltage and current level(s) on the test equipment. (Test voltage of 120V is assumed.)
3. Install the meter in the test socket, making certain that the socket is wired and/or configured for the appropriate meter form.
4. Align the optical pickup of the test equipment with the calibration LED.
5. Begin testing according to standard test procedures. Allow 15 seconds of settling time after applying voltage before making accuracy measurements (20 seconds if modem installed).
6. Check the meter calibration under three load conditions: full load, light load, and full load with lagging power factor. A minimum test time of 30 seconds is needed to reduce test uncertainty to a level compatible with the accuracy of the kV2c meter. (Check the instruction book for

your test board or standard to determine the actual minimum test time. Standards with heavily filtered inputs may require longer test times.)

3.5.4 VArhour Testing

GE kV2c meters are digital sampling meters. All quantities are derived mathematically from the same set of voltage and current sampled data used to compute Watthours. Therefore, it is only necessary to check Watthour calibration to ensure that all revenue quantities are accurate. However, some utilities are required by their Public Utilities Commissions to verify the accuracy of VArhour data as well as Watthour data.

1. Use MeterMate software to put the meter calibration LED into VArhour pulse output mode.
2. Set up the meter for testing as described above in Watthour Test Procedure. The test pulse value is now Kt VArhours per pulse.
3. Begin testing according to your standard VArhour test procedures. Allow 15 seconds of settling time after applying voltage before making accuracy measurements (20 seconds if modem installed).

NOTE: Test conditions with high power factors require very long VArh test times. Typically VArh testing is done at 120V and 0.5 PF.

3.6 Battery Replacement

Lithium Inorganic 3.6 Volt Battery (Safety Precautions)

- Do not expose battery to temperatures above 100 degrees C. Do not incinerate, puncture, crush, recharge, short circuit and over-discharge battery.
- The contents are water reactive and the battery contents can form HCL (hydrochloric acid), SO_2 (sulfur dioxide) and H_2 (hydrogen), upon contact with water (only when forced open). Do not expose contents of battery to water. Do not expose contents to high humidity for extended periods of time.
  - Dispose of batteries in accordance with local, state and federal hazardous waste regulations.

To obtain an MSDS (Material Safety Data Sheet) , contact your local GE supplier.

3.6.1 Replacing the Battery

Note: The battery should be replaced within 30 seconds of de-energizing the meter to avoid losing date/time information and forcing the meter into an Er 000002 state.

3.6.1.1 Replacing the Battery when a Battery Port is not Present on Meter Cover

CAUTION - Battery installation must be done with NO power applied to the meter.

1. Remove power from the meter.
2. Remove the meter cover.
3. Remove the old battery and disconnect its wire from the bezel battery connector.
4. Place the new battery in the battery compartment.
5. Connect the battery wire to the bezel battery connector.
6. Replace the meter cover.
7. Energize the meter.
8. Reset the Accumulated Outage Duration (time on battery backup) value using MMDOS or MMCOMM commands (Reset, Battery).

3.6.1.2 Replacing the Battery when a Battery Port is Present on Meter Cover

CAUTION –Do not need to remove meter cover but should install battery with NO power applied to the meter.

1. Remove power from the meter.
2. Open the battery port hatch on the meter cover. (It may be necessary to use the edge of a tool to pry the battery port hatch open.)
3. Reach fingers into the battery port and disconnect the old battery.
4. Remove the old battery.
5. Connect the battery wire to the connector in the battery compartment of the bezel.
6. Slide new battery into battery compartment.
7. Close battery port hatch and replace seal.
8. Energize the meter.
9. Reset the Accumulated Outage Duration (time on battery backup) value using MMDOS commands (Reset, Battery).

3.7 Service

The GE kV2c Meter is factory calibrated and requires no routine or scheduled service by the user.

3.8 Repair

Factory repair or replacement service is offered when you cannot fix a problem. Because of the high density and integrated design, the repair of on-board components is not recommended. Instead, return the whole meter to General Electric as described in the following paragraph.

3.9 Returning a Meter

If you wish to return a meter, call your General Electric sales representative for a Return Authorization. The entire meter should be returned with the GE supplied Return Authorization information form completed. Key information includes quantity, catalog

number, serial number(s) and a complete description of the problem. Return instructions will be provided by your General Electric sales representative.

3.10 Cleaning

CAUTION	*Care must be taken during cleaning not to damage or contaminate any gold-plated contacts of the connectors.*
CAUTION	***Do not immerse the meter in any liquid.*** ***Do not use abrasive cleaners on the Lexan covers.*** ***Do not use chlorinated hydrocarbon or ketone solvents on the covers.***

3.11 Storage

The kV2c Meter is a durable device; however, it should be handled and stored with care. The temperature and humidity levels in storage are not critical; but extremes of either factor should be avoided.

3.12 Troubleshooting Guide

The meter displays two types of codes:

Error codes begin with Er and are shown in

- **Table 3-4**.
- Caution codes begin with CA and are shown in Table 3-5.
- Problems that do not display any codes are listed in Table 3-6.

3.13 Errors and Cautions

The GE kV2c Meter continually checks for internal errors, hardware failures, and cautions. These events are reported in coded form on the LCD.

3.13.1 Error Reporting

The meter continuously checks its hardware components — ROM, EEPROM, flash, battery, DAP, microprocessor — to ensure that they are operating properly. When the meter detects that a hardware component is not operating properly, an error is reported. Error codes are displayed as soon as they are detected. The meter can be programmed to freeze error codes in the display when an error is detected. Refer to

Table 3-4 for a list of errors. If subsequent tests indicate that the hardware component is operating properly, the meter will clear the error automatically.

Errors are serious events and usually indicate a condition has occurred that may have compromised the meter data. Unless GE has issued a service advisory indicating that other actions should be taken, *you should remove the meter from service and contact your GE sales representative*. The only exception to this rule is the Battery Failure & Power Loss error display, Er 000 002. ***Do not return meters displaying Er 000 002***.

The Er 000 002 display indicates that the meter lost time during a power outage because of a weak, missing, disconnected, or defective battery. Replace the battery and reprogram the meter to eliminate the problem.

TIP: When the meter is read through the OPTOCOM port, error and caution conditions are returned with the meter data regardless of what display options are chosen in the meter program.

Table 3-4. Error Code Display

Error Display	Probable Cause	Remedy
Er 000 002	Power outage occurred, and: a. Battery disconnected. b. Battery defective.	Reprogram meter, and: a. Connect battery. b. Replace battery.
Er 000 020	Hardware failure.	Replace meter.
Er 000 200	Non-volatile data error: a. EEPROM error. b. Flash error.	Replace meter.
Er 001 000	Firmware code error: a. ROM code error. b. Flash code error.	Replace meter.
Er 100 000	Voltage reference error.	Replace meter.
Er 200 000	DSP error.	Replace meter.
Er 300 000	Both Voltage Reference and DSP errors.	Replace meter.

3.13.1.1 Er 000002—Battery Failure & Power Outage

The Battery Failure & Power Outage error indicates that the battery failed to maintain power during an outage. The meter has reverted to a Demand mode of operation. The meter will increment only Data Accumulation, Billing Summation, & maximum Demand values upon energizing the meter after loss of date/time information. TOU and LP operations are suspended. TOU and LP data accumulated prior to the loss of date/time information is stored in NV RAM and is available for reading via the optical port or remote communication link. The battery should be replaced and, after reading the meter electronically to extract the NV RAM data, the meter fully reprogrammed to ensure proper operation. Prior LP data will be lost when the meter is reprogrammed, so make sure you read it before reprogramming the meter. The meter can stay in service.

Date & Time:	Lost
Load Profile recording:	Stopped
Register Function:	Demand Only
Program:	OK
TOU schedule:	Stopped
TOU calendar:	Stopped
Billing Data:	Total accumulations and max. demands

	are OK

3.13.1.2 Er 000020—Hardware Failure

The Hardware Failure error indicates that the meter detected an internal hardware failure. The meter should be taken out of service and returned to GE.

Date & Time:	Stopped
Load Profile recording:	Stopped
Register Function:	Demand Only
Program:	OK
TOU schedule:	Stopped
TOU calendar:	Stopped
Billing Data:	May be corrupt

3.13.1.3 Er 000200—Non-Volatile Data Error

The Non-Volatile Data error indicates a failure in either the EEPROM used to store configuration information and billing data or the flash used to store self-reads, event logs and load profile data. When the meter is not communicating, it continually tests the integrity of the data stored in non-volatile memory. If the meter detects an error in the non-volatile data, it sets the Non-Volatile Data error. If subsequent tests pass, the error is cleared. A meter with a Non-Volatile Data error should be removed from service and returned to GE.

Date & Time:	OK
Load Profile recording:	May be corrupt
Register Function:	Unchanged
Program:	May be corrupt
TOU schedule:	May be corrupt
TOU calendar:	May be corrupt
Billing Data:	May be corrupt

3.13.1.4 Er 001000—Firmware Code Error

The Firmware Code error indicates a failure in either the masked ROM used to store firmware or the flash used to store functional enhancements and user defined calculations. When the meter is not communicating, it continually tests the integrity of the firmware stored in masked ROM and flash. If the meter detects an error in the firmware, the meter sets Firmware Code error. If subsequent tests pass, the error is cleared. A meter with a Firmware Code error should be removed from service and returned to GE.

Date & Time:	OK?
Load Profile recording:	OK?
Register Function:	Unchanged
Program:	OK?
TOU schedule:	OK?
TOU calendar:	OK?
Billing Data:	OK?

3.13.1.5 Er 100000—Voltage Reference Error

The Voltage Reference error indicates a problem in the analog to digital conversions for voltages and currents. If the meter detects a problem with the voltage reference, the meter sets the Voltage Reference error. If subsequent tests pass, the error is cleared. A meter with a Voltage Reference error should be taken out of service and returned to GE.

Date & Time:	OK

Load Profile recording:	Corrupt data
Register Function:	Unchanged
Program:	OK
TOU schedule:	OK
TOU calendar:	OK
Billing Data:	Corrupt data

3.13.1.6 Er 200000—DSP Error

The DSP error indicates a problem with the digital signal processing of the voltage and current samples. If the meter cannot read and process valid voltage and current samples, the meter sets the DSP error. If subsequent tests pass, the error is cleared. A meter with a DSP error should be taken out of service and returned to GE.

Date & Time:	Stopped
Load Profile recording:	Stopped
Register Function:	Unchanged
Program:	OK
TOU schedule:	Stopped
TOU calendar:	Stopped
Billing Data:	Stop accumulating

3.13.2 Caution Reporting

The meter also checks other conditions, which are of concern, but do not indicate a problem with the meter hardware. The meter reports these as cautions. Individual cautions may be enabled or disabled selectively. If a caution is enabled, it can be configured to be displayed and optionally freeze the display.

Low battery, loss of program and unprogrammed cautions are used to remind the user of actions that are required. Any meter with a low battery caution may lose time if the battery is not replaced before the next power outage.

Other caution codes report unusual operation such as receiving energy from the load, leading power factor, very high current flow, or low voltage.

TIP: When multiple cautions occur they are combined. For example, CA040400 indicates leading quadergy and low potential.

Table 3-5. Caution Code Display

Caution Display	Probable Cause	Remedy
CA 000 001	Low battery. Battery failed test.	Replace battery.
CA 000 010	Meter unprogrammed. Using default values.	Program the meter.
CA 000 040	Loss of program. Programming interrupted. Using previous values.	Program the meter.
CA 000 400	Low potential on indicated phase.	Check circuit voltages.

Caution Display	Probable Cause	Remedy
CA 004 000	Demand overload warning has exceeded programmed threshold.	Check for service overload conditions. Check programming threshold value.
CA 040 000	Leading kVArh warning.	a. Disable the warning. b. Check system operating parameters if leading kVArh is unexpected.
CA 400 000	Received kWh warning. a. CT polarity is incorrect. b. Energy is flowing from load to line. c. Meter's internal wiring defective	a. Check meter socket and CT wiring. b. Disable caution. Check system operating parameters if reverse energy flow is unexpected. c. Check that sensor connector is properly seated.

3.13.2.1 CA 000001—Low Battery

The Low Battery caution indicates a weak or missing battery. The meter periodically tests the battery. To test the battery, the meter applies a load to the battery, waits, and samples the battery voltage. The meter sets the Low Battery caution if the resulting battery voltage is low. The Low Battery caution is cleared when the battery test passes. The meter tests the battery under the following conditions:

- Power up
- 1st of each month (00:16)
- Activate the Display Switch (not in Test Mode)
- MeterMate Meter Comm. command

3.13.2.2 CA 000010—Unprogrammed

The Unprogrammed caution indicates that the meter is not programmed and is functioning in a "Default Demand" mode. The meter is shipped "unprogrammed" unless ordered "factory programmed". The MeterMate Meter Comm "unprogram" command will put the meter into the "Default Demand" mode and set the Unprogrammed caution. Programming the meter clears the Unprogrammed caution.

3.13.2.3 CA 000040—Loss of Program

The Loss of Program caution indicates that a programming session was interrupted. The meter sets the Loss of Program caution when a programming session is terminated abnormally. The meter will "roll back" to the last good program and operate from it. If a meter has a Loss of Program caution, reprogram the meter and the Loss of Program caution will be cleared.

3.13.2.4 CA 000400—Low Potential

The Low Potential caution indicates that the voltage for one or more phases fell below the reference voltage minus the tolerance (uses Diagnostic 6 threshold). All active phases are tested every 5 seconds using the phase voltages from the previous second. The meter sets

the Low Potential caution when the test fails 3 consecutive times. The meter automatically clears the Low Potential caution when all active phases exceed the minimum threshold for 2 consecutive tests.

3.13.2.5 CA 004000—Demand Overload

The Demand Overload caution indicates that the load demand of the user –selected quantity exceeded the programmed threshold. The meter compares the value of the user-selected "instantaneous" demand quantity to the programmed threshold every 5 seconds using the demand from the previous second. The meter sets the Demand Overload caution when the user-selected demand exceeds its threshold for 3 consecutive tests. The meter does not automatically clear the Demand Overload caution. The Demand Overload caution is cleared by a demand reset.

3.13.2.6 CA 040000—Leading kvarh

The Leading kvarh caution indicates that the current leads the voltage instead of lagging it. The meter tests the direction of the quadergy every 5 seconds using the kvarh from the previous second. The meter sets the Leading kvarh caution when the direction of the quadergy is leading for 3 consecutive tests. The meter does not automatically clear the Leading kvarh caution. The Leading kvarh caution is cleared by a demand reset.

3.13.2.7 CA 400000—Received kWh

The Received kWh caution indicates that active energy was received from the load. The meter tests the direction of the active energy every 5 seconds using the kWh from the previous second. The meter sets the Received kWh caution when the direction of the active energy is received for 3 consecutive tests. The meter does not automatically clear the Received kWh caution. The Received kWh caution is cleared by a demand reset.

Table 3-6 Fault Symptoms Without Codes

Symptom	Probable Cause	Remedy
High/low demand registration	a. Socket wiring error. b. Meter internal wiring defective. c. Defective sensor.	a. Rewire according to applicable diagram. b. Check that voltage and current connectors are seated properly. Check the leads for damage. c. Replace meter.
Meter overheats	a. Meter socket has insufficient capacity or is not adequately wired. b. Meter is overloaded. c. Poor connection at socket terminal.	a. Replace mounting with a heavy duty model. b. Use transformer rated installation. c. Replace socket terminal.
Meter runs slow	a. Socket wiring error. b. Meter internal wiring defective. c. Defective sensor.	a. Rewire according to applicable diagram. b. Check that voltage and current connectors are seated properly. Check the leads for damage. c. Replace meter.
No display	a. Circuit de-energized. b. Test link(s) open. c. Meter internal wiring defective.	a. Check circuit voltages. b. Close test links. c. Check that the voltage and current sensors are properly connected. Also check the wires for damage.
Option board malfunctioning	a. Option board improperly installed. b. Output cables defective. c. Defective option board. d. Wrong program values	a. Check option board installation. b. Check output cables for loose or damaged leads. c. Replace option board. d. Reprogram meter

4. Upgrading

4.1 General

WARNING: The GE kV2c meter contains lethal voltages. The meter must be completely disconnected from any external circuits before disassembly is attempted. Failure to observe this practice can result in serious injury or death.

Refer to the MeterMate software manuals (GEH-5082I, GEH-5084I) for instructions on how to install and enable software options.

4.2 Softswitches

The basic kV2c meter provides a powerful platform for advanced metering. Features may be added to the basic meter through "Softswitches", which enable built-in capabilities. Softswitches may be ordered at the time the meter is purchased, or added in the field. Softswitches may be removed from one meter and installed in another meter.

The following table lists the Softswitches available in the kV2c:

Switch	Description
A[2]	Alternate Communication
B	By Quadrant measurements
C[1,4]	Call In on Outage (Modem)
D[2]	DSP Sample Output
E[1]	Event Log
G	Revenue Guard Plus
I	Instrument Transformer Correction
K[1]	kVA - Power Factor, kvar and kVA measures
L	Transformer Loss Compensation
M	Expanded Measures - per element measurements
N[5]	Billing Demand
P[2]	Pulse Initiator Output
Q	Power Quality Measures
R[3]	Basic Recording (Four-channel)
T[1]	Time of Use
V	Fast Voltage Event Monitor and Log (Sag and swell, 1 to 65k cycles)
W	Waveform capture (for harmonic analysis) (70 sample sets - 6 measures per set - V & I per phase)
X	Expanded Recording (20-channel)
Z	Totalization

Table 4-1 kV2c Softswitches

[1] Works in kV , kV2. and kV2C.

5

[2] Same as kV—not sold as an upgrade— factory set in all meters.

[3] R switch factory set in all kV's but must be set (optionally) in kV2.

[4] Set in Comm Board, not meter, and cannot be downgraded (removed) from meter.

[5] An Upgradeable switch in KV2c

4.2.1 Alternate Communication—A Softswitch

The Alternate Communication Softswitch allows communication option boards to communicate with the meter. It is set in all meters.

4.2.2 By Quadrant Measurements—B Softswitch

The By Quadrant Measurements Softswitch allows the enabled measurements to be tracked by quadrant:

- kWh and kW demand
- kvarh and kvar demand[1]
- kVAh and kVA demand (Phasor, Apparent, Arithmetic Apparent) [1]

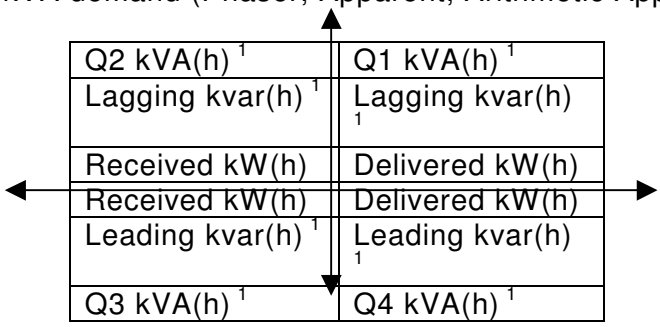

[1] Requires K Softswitch to be enabled.

4.2.3 Call In on Outage—C Softswitch

The Call In on Outage Softswitch allows the meter to call in during an outage to report the outage. It must be used in conjunction with a communication option board such as the Internal Modem or the RSX board in the external modem mode. The communications option board must have the call-in-on-outage battery pack. The Soft switch is stored in the option board, not in the meter. Softswitches cannot be removed from the communication option boards.

4.2.4 DSP Sample Output—D Softswitch

The DSP Sample Output Softswitch enables the output of voltage and current samples after the gain and phase corrections and DSP case has been applied.

4.2.5 Event Log—E Softswitch

The Event Log Softswitch allows the meter to track the most recent 500 "events". Use MMProg to select which event types should be logged and how many occurrences should be tracked - up to 500 occurrences max. Date & time stamps are included on logged events for Demand/LP or TOU meters. Logged Events include:

- Diagnostics 1~8: when set & when cleared (d5 by phase & total)

- Cautions: Under voltage, Demand overload, leading kvarh, reverse energy flow -- when set & when cleared
- Real Time Pricing activation and deactivation
- Test Mode activation and deactivation
- Externally initiated meter reading (local or remote)
- Programming sessions
- Power up, power down
- Demand resets
- Self Reads

4.2.6 Instrument Transformer Correction—I Softswitch

The Instrument Transformer Correction Softswitch allows users to create and optionally use an alternate set of calibration constants. Use MMDOS to input the CT and VT ratio and phase angle correction factors for the instrument transformers used at that installation. MMDOS uses those factors, plus the original factory calibration constants, to calculate new calibration constants. The adjusted calibration constants are stored separately from the original factory constants. MMDOS allows users choose whether to apply the alternate set of calibration constants or not (makes calibration testing easier). All measurements, including the Test LED output, are affected.

4.2.7 kVA, kvar and Power Factor Measurements—K Softswitch

The kVA, kvar and Power Factor Measurements Softswitch adds kVA(h), kvar(h), kQ(h) and PF measurement capability.

- kvar(h) may be IEEE defined or “Fuzzy vars”.
- kVA(h) may be Phasor, Apparent, or Arithmetic Apparent.
- PF may be user defined as one of the choices below:
  - Traditional (kWh / Phasor or Apparent kVA)
  - Alternative (kWh / Arithmetic Apparent kVA)
  - Displacement PF (filtered to the fundamental frequency)

The kV2c can have up to 20 quantities defined in the measurement profile, with 5 of these used for summations and demands. Each demand can have two coincident measurements. Coincident Demand/PF capability in every kV2c makes the K switch an even more powerful feature.

4.2.8 Transformer Loss Compensation—L Softswitch

The Transformer Loss Compensation Softswitch allows users to create and optionally use a set of transformer and line loss coefficients to compensate the metered values. Losses may be added to, or subtracted from, the metered values. Use MMDOS to input the no-load and load loss data for the power transformers and conductors used at that installation. MMDOS translates the data into compensation factors to be optionally used by the meter. The original factory calibration constants are unaffected. MMDOS allows users to choose whether to apply the loss compensation factors or not (makes field calibration testing easier). The Test LED output is unaffected by the loss compensation. All other data (except Distortion kVAh) is affected when the factors are applied.

4.2.9 Expanded Measurements—M Softswitch

The Expanded Measurements Softswitch allows the accumulation or Load Profile Recording of these “per element” values:

- kWh & kW Demand
- kvarh & kvar Demand
- Apparent kVAh & kVA Demand

Measured values with this softswitch include by element, by quadrant. Measurements for summing all elements by quadrant require the B switch. Measurements for summing all elements of reactive or apparent measures to a total for the meter require the K switch.

Note: These values are always available for "real time" displays, but cannot be accumulated or recorded without the M soft switch.

4.2.10 Demand—N Softswitch

Demand (N) soft switch is used to calculate billing demands. If the N switch is not present. Meter will not calculate billing demands and will set demands to 0. Meter will always calculate non-billing demands for cautions, diagnostics, etc.

4.2.11 Pulse Initiator Output—P Softswitch

The Pulse initiator Output enables pulse outputs to the I/O board. It is factory set in all meters.

4.2.12 Power Quality Measurements—Q Softswitch

The Power Quality Measurements Softswitch enables the accumulation or Load Profile Recording of these power quality related values:

- Distortion kVA(h) (total and per element)
- Distortion PF (total and per element)
- Total Demand Distortion (TDD)
  TDD = Total Harmonic Current / Max. Current Per Phase
- Total Harmonic Distortion (THD): I_{THD} & V_{THD} per element
- Line Currents: I_A, I_B, I_C, I_N, (max, min, store); I_A^2h, I_B^2h, I_C^2h, I_N^2h
- Voltages (L-L, L-N): V_A, V_B, V_C, (max, min, store); V_A^2h, V_B^2h, V_C^2h

Note: These values are always available for "real time" displays, but cannot be accumulated or recorded without the Q soft switch.

4.2.13 Basic Recording—R Softswitch

The Basic Recording Softswitch enables up to 4 channels of load profile recording in 64KB of on-board memory and up to 12 Self-Read entries in a separate memory space. The number of active channels and days of LP data are configurable using the MMProg Recorder Option editor.

4.2.14 Time Of Use—T Softswitch

The Time Of Use Softswitch enables TOU operation. The meter supports:

- Up to 4 TOU periods & 4 Seasons
- Up to 3 daily rate schedule types, plus one holiday schedule
- Up to 80 TOU Schedule set points
- Up to 150 programmable dates
  - Holidays, Season Change, Daylight Savings Time (DST), Self Read, Demand

Reset
- Perpetual calendar handles most dates

- Up to 5 billing & 5 demand measures per TOU period
  Each demand measure capable of 2 coincident values
- Future activation of TOU Schedule & Calendar possible
- Enables load control output switch capabilities
- Enables Self Read actions on specified dates -- with or without a Demand Reset

4.2.15 Fast Voltage Event Monitor & Log—V Softswitch

The Fast Voltage Event Monitor & Log Softswitch enable monitoring all phases for voltage sags and swells.

- Independently set magnitude threshold for sags and swells
  0~100% of Reference Voltage in 1% increments
- Duration threshold from 1 to 65,535 cycles (18.2 min. @ 60Hz)
- Event ends when all phase voltages are within tolerance
- Voltage Event log is separate from regular Event Log (E switch)
- Separate sag and swell event counters (65,535 events max.)
- For each of the most recent 200 events, the Log captures :
  - Event type (sag or swell)
  - Max (swell) or Min (sag) RMS cycle voltage for each phase
  - RMS current coincident with voltage max/min
  - Duration of the event (in cycles -- up to 65,535)
  - Date/Time recorded if meter is in Demand/LP or TOU mode

4.2.16 Waveform Capture—W Softswitch

The Waveform Capture Softswitch enables the capture of sample data from the kV2c. The meter captures 6 sets of 70 samples each (3 voltages, 3 currents). There are approximately 54.7 samples per cycle, per phase, @ 60 Hz. An MMDOS command triggers the data capture. MMDOS can then generate a harmonic analysis report for each voltage and current input. A Power Analysis report is also generated.

4.2.17 Expanded Recording—X Softswitch

The Expanded Recording Softswitch enables up to 20 channels of load profile recording in 192KB of on-board memory and up to 12 Self Read entries in a separate memory location. Number of active channels and days of LP data are configurable in the MMProg Recorder Option editor. The number of days of storage depends on number of active channels and LP interval length.

4.2.18 Totalization—Z Softswitch

The Totalization Softswitch enables combining data from up to 5 meters—4 external meter inputs plus the internal kV2c metered data. External inputs require use of the Multiple I/O option board. Up to 8 data combinations are allowed—“totalization maps”— which add or subtract inputs with the same engineering units. One totalization channel may be used as input to a second totalization channel. The Totalization Softswitch also enables the scaling of external pulse inputs. External inputs may be recorded and displayed as unscaled raw pulse counts without the Z soft switch installed.

4.3 Converting from Demand to Demand LP or TOU Mode

The kV2c is four meters in one: Demand, Demand Load Profile, TOU and TOU Load Profile. The Load Profile recording and Time-Of-Use options require Softswitches to extend the functionality of the basic Demand meter.

The following items are required to enable Demand LP, TOU or TOU LP operation:

- Computer with MeterMate Software
- Softswitch holder with T, and R or X switches
- SMARTCOUPLER device
- Time Keeping Battery

If at any time you are unsure if the meter has been upgraded, select **Check Meter** on the MeterMate **Upgrade** screen. The screen will display the capabilities of the meter. To enable the TOU function, proceed as follows:

CAUTION - Battery installation must be done with NO power applied to the meter.

1. Plug the Softswitch holder into the parallel port of the computer.
2. Install and connect the battery. See section 3.6, battery replacement.
3. Apply power to the meter.
4. Connect the SMARTCOUPLER device to the serial port of the computer and the OPTOCOM port on the kV2c Meter.
5. Using **MeterMate** software, go to the **Main Menu**.
6. On the **Main Menu**, select **Program**.
7. On the **Program** menu, select **Upgrade**.
8. On the **Upgrade** menu, select **TOU**.
9. This enables the TOU function in the meter. When completed, the screen reverts to the Upgrade menu.
10. Mark the TOU box on the nameplate.
11. Repeat steps 8 through 10 for the Basic Recording, R, or Extended Recording, X, Softswitch.

TIP: *If you are not ready to install the TOU program, the meter may still be used as a Demand meter after the TOU switch is enabled. The battery may be put in place in the battery holder, but must not be connected until the meter has been programmed for TOU operation.*

To avoid rapid discharging of the battery, energize the meter within 10 minutes of connecting the battery and program the meter for Demand/LP or TOU operation.

4.4 Meter Disassembly

WARNING: The GE kV2c meter contains lethal voltages. The meter must be completely disconnected from any external circuits before disassembly is attempted. Failure to observe this practice can result in serious injury or death.

CAUTION: Do not interchange base and electronics module assemblies between meters. Calibration data stored in the meter is particular to a set of current sensors and electronics module. Interchanging these components causes the meter to lose calibration.

The meter is disassembled in steps. First, remove the meter cover. Second, remove the electronics module from the base.

4.4.1 Removing the Meter Cover

Remove the meter cover as follows from S-base meters:

1. Remove the seal from the right side of the meter. If there is no seal, proceed to the next step.
2. Turn the cover counterclockwise approximately 30 degrees.
3. Lift the cover straight up.

Remove the meter cover as follows from A-base meters:

1. Unseal and remove the terminal cover.
2. Remove the seal from the right side of the meter. If there is no seal, proceed to the next step.
3. Turn the cover counterclockwise approximately 30 degrees.
4. Lift the cover straight up.

4.4.2 Removing the Electronics Module

To remove the electronics module, use a small flat-bladed screwdriver. There are three snap retainers located at the 2, 6 and 10 o'clock positions looking at the face of the meter. Figure 4-1 shows a meter in exploded view. Remove the module as follows:

1. Insert the small screwdriver under one of the snap retainers. Twist the screwdriver and pry up on the snap retainer until it releases. Repeat the procedure with the remaining snaps.
2. Gently remove the module. Take care not to put significant strain on the wires.
3. If any option boards are installed, begin by disconnecting the option leads before proceeding. Some connectors have latches which must be released before disconnecting.
4. Disconnect the remainder of the leads from the module.
5. Place the module on a flat, clean, cloth-covered surface with meter face down.

CAUTION: Do not pull on the wires to disengage the connectors. Pull only on the connectors.

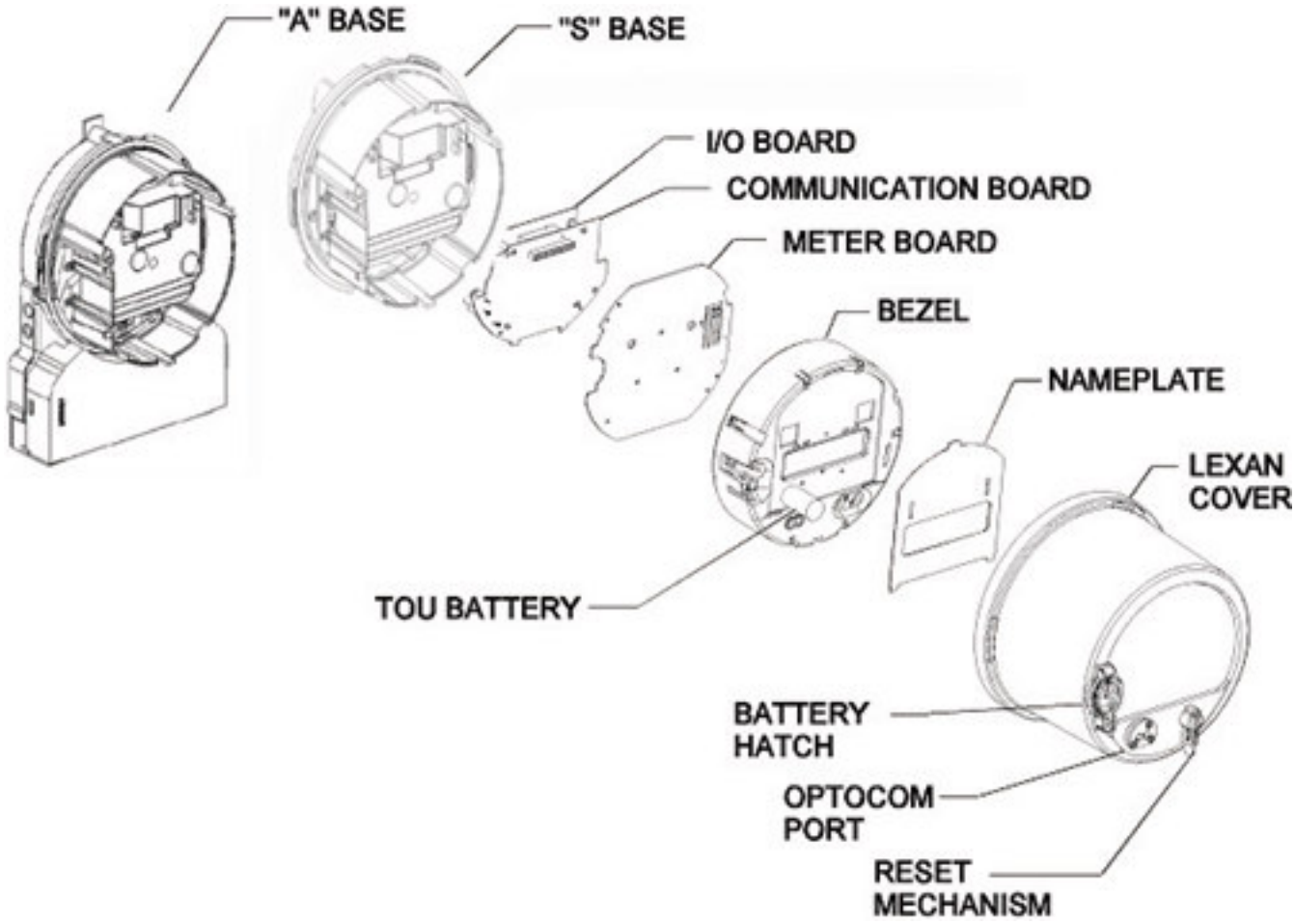

Figure 4-1. Exploded View of kV2c Meter

4.4.3 Removing an Option Board

The following procedure is performed if you are:

- Adding a communication board and an I/O board is installed
- Replacing an option board

To remove the option board, refer to Figure 4-2 and proceed as follows:

1. Disconnect the battery if present.
2. Orient the module so that the warning label is toward you but facing down. The timekeeping battery should be located on the right hand side.
3. Place the module on a flat, clean, cloth-covered surface with the face down.
4. If both communication and I/O boards are present: Hold the I/O board with the thumb and index finger. Use a pair of needle-nose pliers to squeeze the tabs at the end of each spacer while pulling straight up on the board. Lift the board out of the module.
5. If a single option board is present: Hold the option board with the thumb and index finger of each hand near the two board latches. Using your thumbs to push the latches away from the board, tilt the board upward toward yourself.
6. Continue tilting the board until the tabs on the module and the tabs on the board are disengaged.

7. Lift the board out of the module.

4.5 Option Board Installation

Caution INTERCHANGING OPTION BOARDS

Do not interchange option boards between the KV and KV2c meters.

The revenue guard option board for the KV meter won't assemble into a KV2c meter.

The modem and the RSX communication option board for the KV will not function properly in a KV2c meter. However, the kV2c modem and RSX communication option boards may be used in Comm Ready kV meters.

The load profile option board found in a KV meter is not required in the KV2c meter. The load profile options have been included in the main board.

Most importantly, interchanging I/O option boards between the KV and the KV2c meter could cause meter failure.

4.5.1 Installing Option Boards

See Figure 4-2 for a graphic description of board installation.

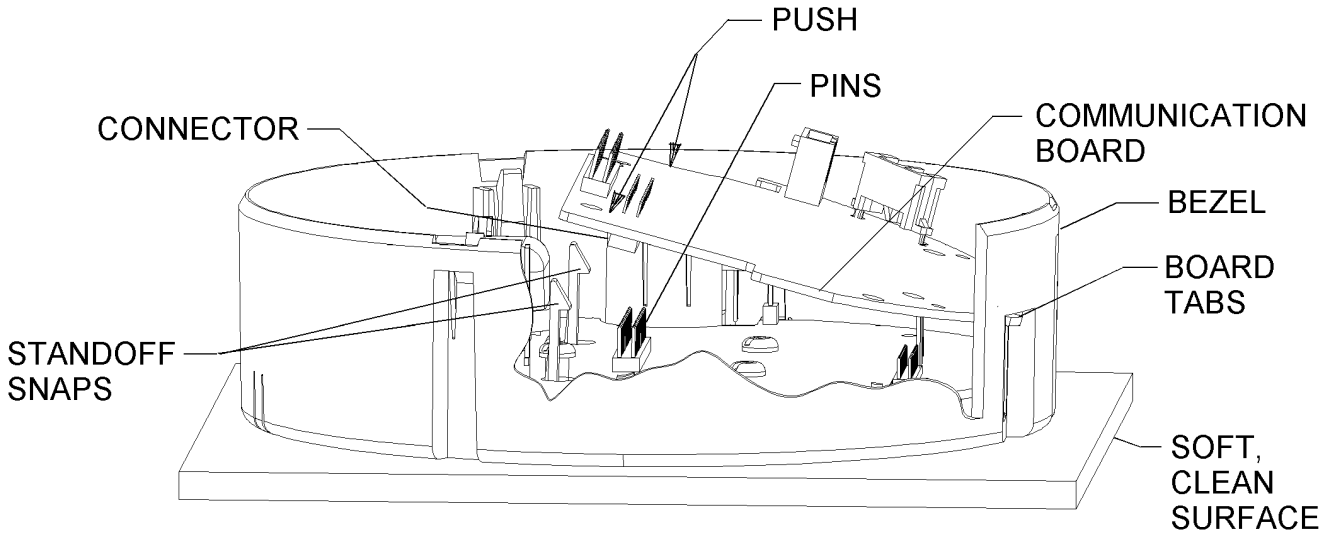

Figure 4-2. Installing a Communication Option Board

4.5.1.1 Installing a Communication Option Board

1. If the meter is not disassembled, follow the disassembly instructions described earlier in this chapter.

2. Place the module face down on a soft, clean surface to protect the nameplate and the liquid crystal display.
3. Check the pins on the meter board. Align any pin that is out of alignment.
4. With the 30-pin connector on the underside of the communication board, insert the tabs on the board into the slots on the bezel.
5. Gently move the board until the communication board connector engages the meter board pins.
6. Push straight down on the option board near the connector. Push gently until the standoffs snap firmly on the edge of the option board.
7. See Section 4.6 for meter reassembly.

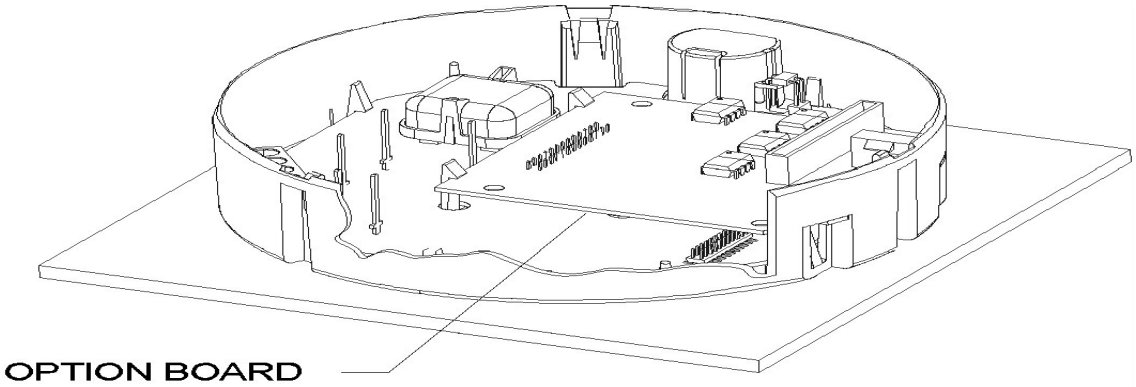

Figure 4-3: Installing the I/O Option Board

4.5.1.2 Installing the I/O Option Board

The I/O board is installed as follows:

1. If the meter is not disassembled, follow the disassembly instructions described earlier in this chapter.
2. Place the module face down on a soft, clean surface to protect the nameplate and the liquid crystal display.
3. Check the pins on the meter board. Align any pin that is out of alignment.
4. With the 30-pin connector on the underside of the board, insert the tabs on the board into the slots on the bezel.
5. Gently move the board until the I/O board connector engages the meter board pins.
6. Push straight down on the option board near the connector. Push gently until the standoffs snap firmly on the edge of the option board.
7. See Section 4.5.1.4 and 4.5.1.5 for installing the I/O cable into the meter base.

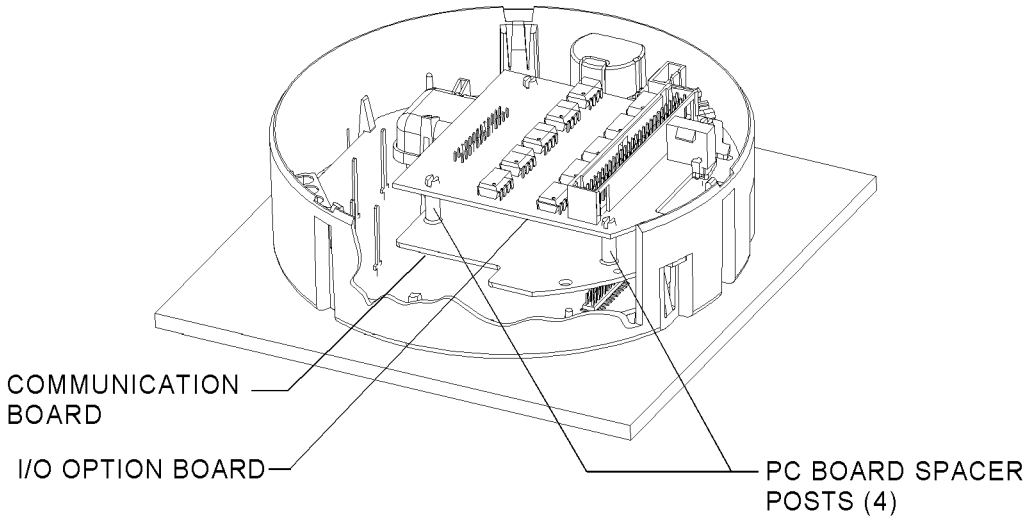

Figure 4-4: Installing the I/O Option Board

NOTE:The I/O board is always the outer option board. This position provides adequate clearance around the board to connect the I/O cable to the board.

4.5.1.3 Installing the I/O Option Board when a Communication Option Board is Present

1. If the meter is not disassembled, follow the disassembly instructions described earlier in this chapter.
2. Place the module face down on a soft, clean surface to protect the nameplate and the liquid crystal display.
3. On topside of communication board, insert the four PC board spacer posts into the four holes shown in Figure 4-4.
4. Place I/O board on top of communication board and align 30-pin connector to 30-pin header.
5. Gently press connector and header together until the four posts are aligned with the four holes in the I/O board.
6. Press boards together until all four posts have snapped securely in place. Test by trying to pull boards apart with moderate force.
7. See Section 4.5.1.4 and 4.5.1.5 for installing the I/O cable into the meter base.

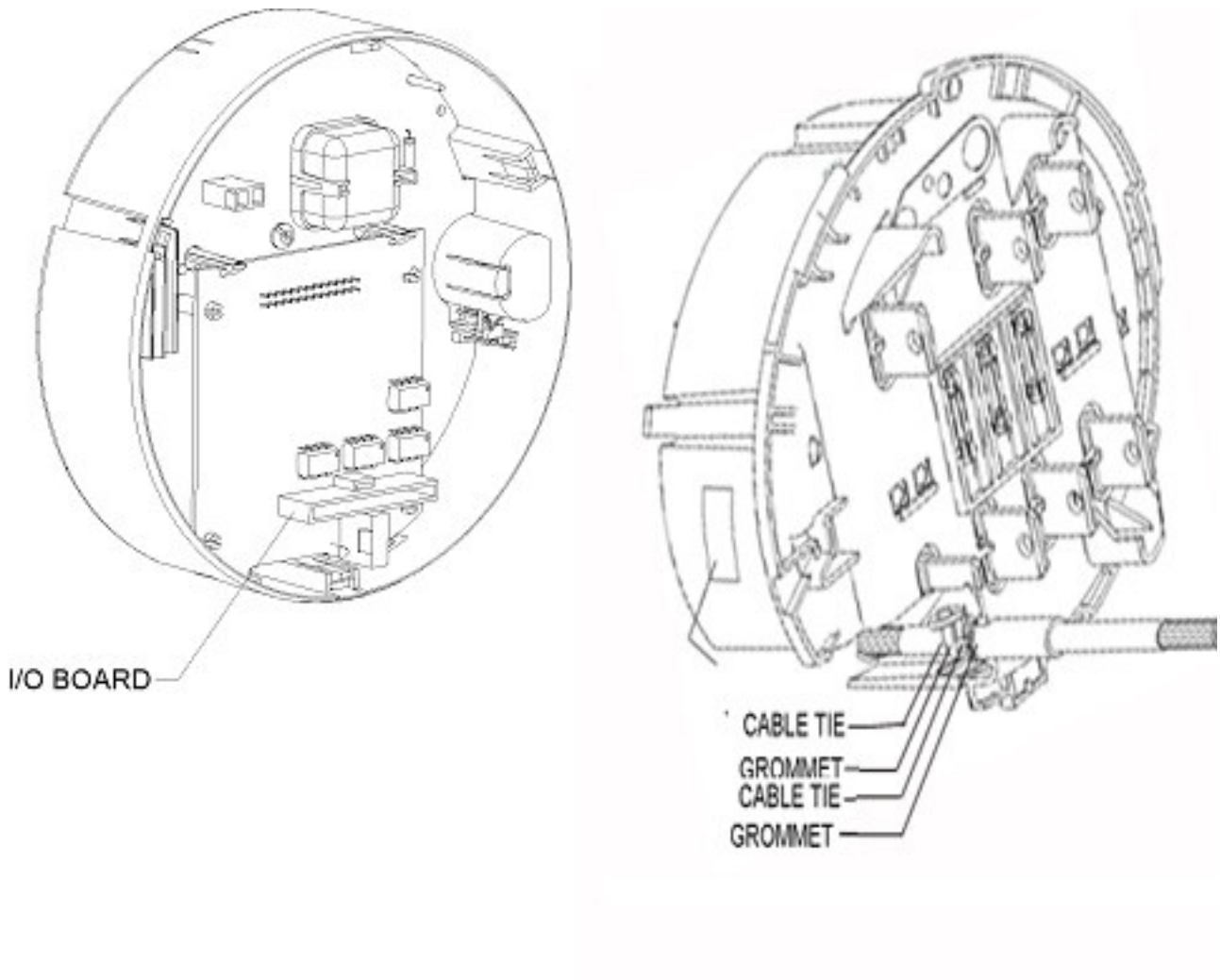

Figure 4-5: A Base I/O Cable Installation

4.5.1.4. S-base I/O Cable Installation

NOTE: If the output cable and the KYZ connector are both attached to the I/O board, then the KYZ output is connected in parallel to both the base terminals and the output cable.

1. Remove the plastic hole plug from the meter base.
2. Push the free end of the I/O cable through the hole from inside the base where the plug had been; then, pull cable until cable grommet is firmly seated against base.
3. Install another grommet on the free end of the cable. Move the grommet up to and against the outside of the base.
4. Secure the grommet with a cable tie.
5. Place I/O label on shroud. (See Figure 2-9)
6. Before replacing the electronics module, plug the cable connector into the mating header on the I/O board.
7. If meter has KYZ terminals in the base, plug the 3-position connector into the mating header on the I/O board.

8. See Section 4.6 for meter reassembly.

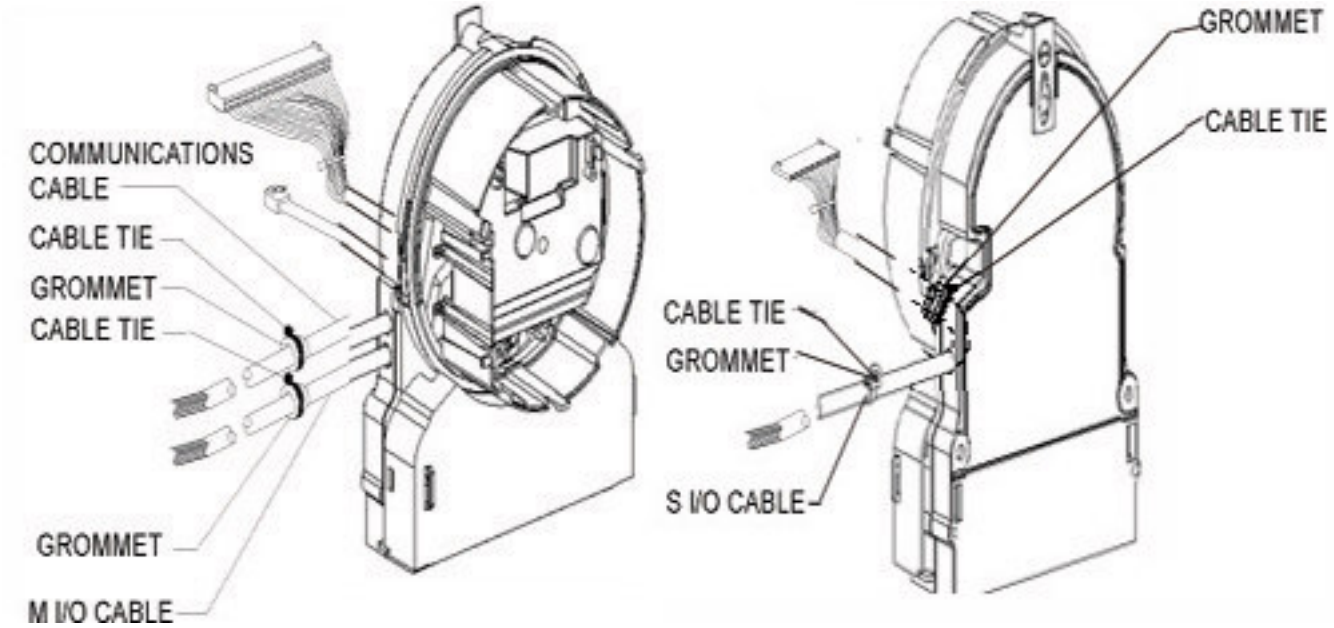

Figure 4-6: A Base I/O Cable Installation

4.5.1.5 A-base I/O Cable Installation

Note: *Installation of I/O cables in an A base meter requires removal and reassembly of the base barrier.*

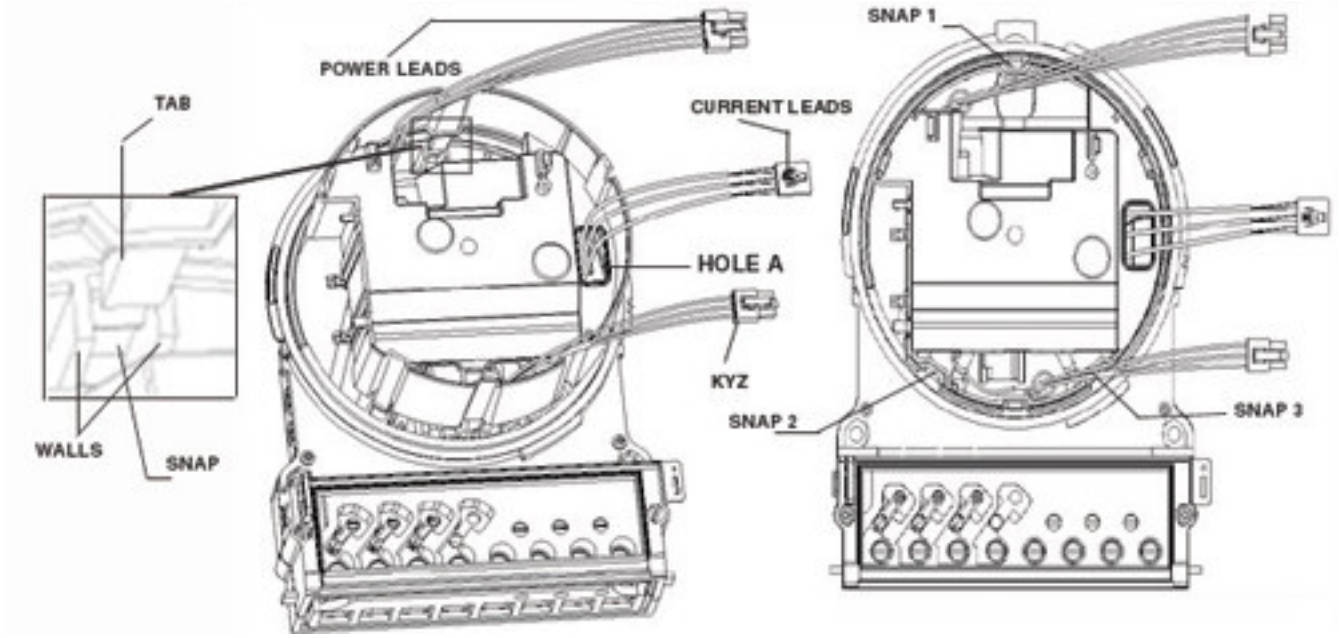

Figure 4-7 Disassembly and Reassembly of Shroud

Removal of Shroud:

1. Orient meter with the meter terminals facing toward you.
2. Using a thin flat bladed screwdriver, depress the tabs indicated “1” in Figure 4-7 until the tab clears the snaps in the base assembly.
3. Repeat this process for the 2 and 3 in Figure 4-7
4. Gently pull the Shroud straight up until it is free from the meter.
5. Gently place Shroud over the side of the Base assembly. This will provide you with access to install I/O cable.

Installation of an I/O cable:

1. Remove and clean the round knockout located on the side of meter base.
2. Cut and remove the existing cable tie from the I/O cable assembly, leaving the grommet free to slide on the cable.
3. Reposition the existing grommet on the cable assembly until it is approximately 7 inches from the connector.
4. Add a new cable tie on the connector side of the grommet to secure it in position.
5. Push the free end of I/O cable through knockout hole and draw cable through base until the existing grommet contacts the inside wall.
6. Slide another grommet over free end of cable (flat end outward) until it comes in contact with the hole in the base.

7. Push the outside grommet into the hole in the base until fully seated, securing the grommet with a cable tie.
8. Place I/O label on shroud.

Note: The S I/O cable exits the meter base on the right side, the M I/O cable on the left. Only one I/O board and cable can be installed in a meter at the time.

Reassembling Shroud:

1. Orient meter with the terminals of the meter facing toward you and the Shroud as shown in Figure 4-7.
2. Align the shroud so the tabs of the shroud are aligned with the guiding walls beside the snaps in the base assembly. Indicated as Tabs 1, 2, 3 in Figure 4-7
3. Press the Shroud top edges gently to snap the tabs of the shroud in the base assembly.
4. Make sure that shroud is fully seated all around on the edge of the base assembly

Note: Current sensor leads need to be put through Hole A on the shroud as indicated in Figure 4-7 located at 3 o'clock. Ensure that leads are not tangled. KYZ, if present, and I/O cable should be taken out through the bottom opening of the shroud as indicated in Figure 4-7. and be accessible for connection to the I/O board mounted in the electronics module. Power Leads should be taken out through the top opening of the shroud as indicated in Figure 4-7

Installation of I/O cable to bezel:

1. Before replacing the electronics module, plug the cable connector into the mating header on the I/O board.
2. If meter uses KYZ output through the base, plug the 3-position connector into the mating header on the I/O board.
3. See Section 4.6 for meter re-assembly.

See Table 4-2 and Table 4-3, I/O Cable Wiring for color coding of I/O cable wires.

NOTE: If the output cable and the KYZ connector are both attached to the I/O board, then the KYZ output is connected in parallel to both the base KYZ terminals and the output cable.

kV2c S I/O Cable		
Signal Name	Wire Color	Pin Number
Y1_OUT	Yellow	4
Z1_OUT	Black	6
Y2_OUT	Grey	10
Z2_OUT	Blue	12
K1/K2_OUT	Red	8
Z3_OUT	Orange	14
K3_OUT	Brown	16
RTP+	Violet	2
RTP-	Green	1

Table 4-2 S I/O Cable Wiring

kV2c M I/O Cable		
Signal Name	Wire Color	Pin Number
Y1_OUT	Yellow	8
Z1_OUT	Black	12
Y2_OUT	Grey	20
Z2_OUT	Blue	24
K1/K2_OUT	Red	16
Z3_OUT	Orange	28
K3_OUT	Brown	32
RTP+	Violet	4
RTP-	Green	2
Z4_OUT	White	36
Z5_OUT	White/Black	40
Z6_OUT	White/Brown	44
Z7_OUT	White/Red	48
Z8_OUT	White/Orange	52
Y1_IN	White/Yellow	5
K1_IN	White/Green	9
Z1_IN	White/Blue	13
Y2_IN	White/Violet	17
K2_IN	White/Grey	21
Z2_IN	White/Black/Brown	25
Y3_IN	White/Black/Red	29
K3_IN	White/Black/Orange	33
Z3_IN	White/Black/Yellow	37
Y4_IN	White/Black/Green	41
K4_IN	White/Black/Blue	45
Z4_IN	White/Black/Violet	49

Table 4-3 M I/O Cable Wiring

Caution POLYPHASE TESTING OF kV2c METER

The kV2c meter is designed to meter conventional services with nominal line-to line voltages up to 480 Volts for meters rated 120-480 Volts or line-to-line voltages up to 208 Volts for meters rated 57-120V. Operation at voltages more than 10% above these ratings can lead to shortened life or failure.

Do not *apply polyphase test voltages, using "Wye" test conditions, at voltages higher than 305 Volts line-to-neutral (277V + 10%) for 120-480V rating; no higher than 132 Volts line-to-neutral (120V +10%) for 57-120V rating*

Meter forms 9S, 10A, 36S, 48A, 16S or 16A rated 120-480V may be applied in 600/345V "Wye" services. Polyphase "Wye" test voltages applied to these meters must not exceed 380V line-to-neutral (345V +10%)

For example, *polyphase testing with 480 Volt "Wye" line-to-neutral conditions will result in voltages* ***in excess of 800 Volts*** *being applied to the meter. Stresses of this magnitude can result in immediate failure of the meter and/ or shorten meter life.*

4.6 Meter Reassembly

1. connect the power lead assembly into the four pin connector on the meter board.
2. Reconnect the current sensor leads to the meter board. The current sensor leads are located at 3 o'clock with a 15-position connector and connects to a 15-pin header on the meter board. Push the connectors together until fully seated.
3. If meter has an I/O option board installed, plug the I/O cable into the mating header on the I/O board.
4. If meter uses KYZ output through the base, plug the 3-position connector into the mating connector on the I/O board.
5. Fold the electronics module onto the base. Align the notches on the bezel with the locks on the base. Push the module onto the base until the locks snap into place.
6. Replace the cover by aligning it with the openings in the base and rotating it clockwise approximately 30 degrees.
7. Install security seals as required.

5. Site Analysis Guides

NOTICE:

These site analyses include rudimentary connection diagrams for identification of metering installation. *These diagrams are not metering installation guides.*

Table 5-1 Site Analyses

Site Analyses pages to See **(Blondel solutions are in *bold type*)**

	2W-1ϕ	3W-1 ϕ	3W-Network	3W-Δ	4W-Δ	4W-Y	5W-2 ϕ
1S	***5-2***						
2S		5-3					
3S	***5-4***	5-5					
4S		5-6					
9S					***5-7***	***5-8***	
12S		***5-9***	***5-10***	***5-11***			
16S					***5-12***	***5-13***	
36S						5-14	
45S		***5-15***		***5-16***	5-17, 5-18	5-19, 5-20	5-21
56S		***5-22***		***5-23***	5-24, 5-25	5-26, 5-27	5-28
10A					***5-29***	***5-30***	
13A		***5-31***	***5-32***	***5-33***			
16A					***5-34***	***5-35***	
36A						5-36	
45A		***5-37***		***5-38***	5-39, 5-40	5-41, 5-42	5-43
48A					***5-44***	***5-45***	

Traditional metering schemes not satisfying Blondel's theorem have demonstrated acceptable commercial accuracy. *To fully realize the superior accuracy of electronic electricity meters, use Blondel metering solutions everywhere practical*. **Keep electrical energy the most accurately measured common commodity**.

See Figure 5-1, The Site Genie™ Worksheet.

KV2c Site Analysis

Form 1S *(Self-Contained)*

2-Wire
Single phase

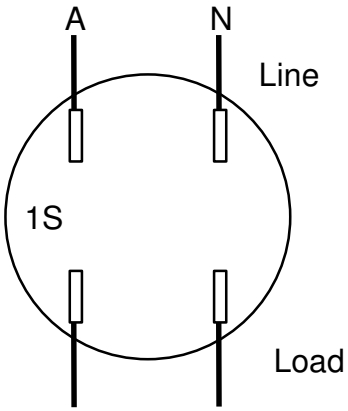

B LONDE solution L

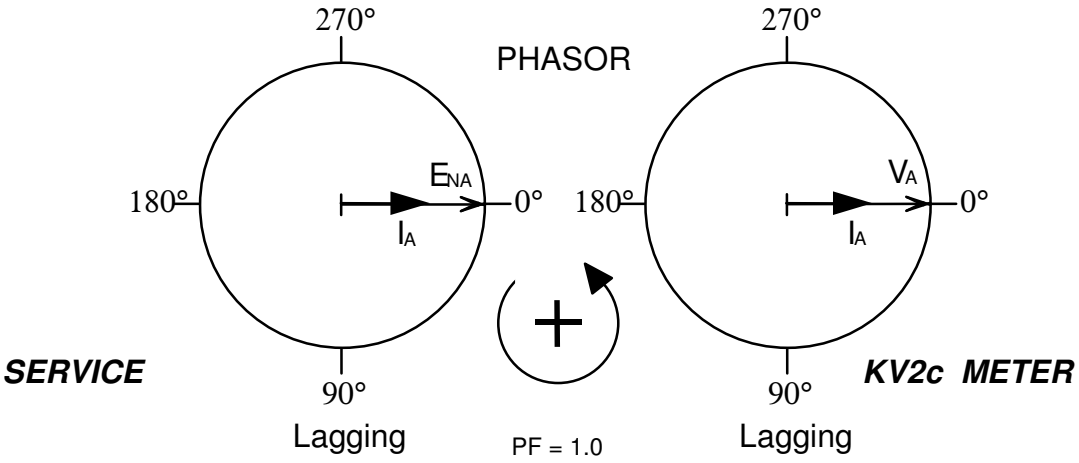

Actual installation procedures, equipment, and connections must to applicable codes and standards

2-wire, 1-phase, 1-element

MO 3–5

kV2c Site Analysis

Form 2S *(Self-Contained)*

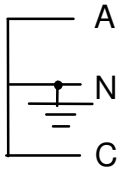

3-
Singlephase

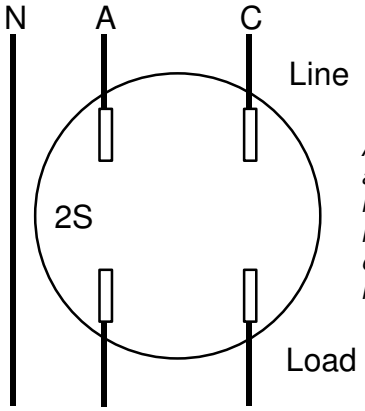

Accuracy is based on assumptions which, if not fulfilled, may result in systematic errors unrelated to meter calibration.

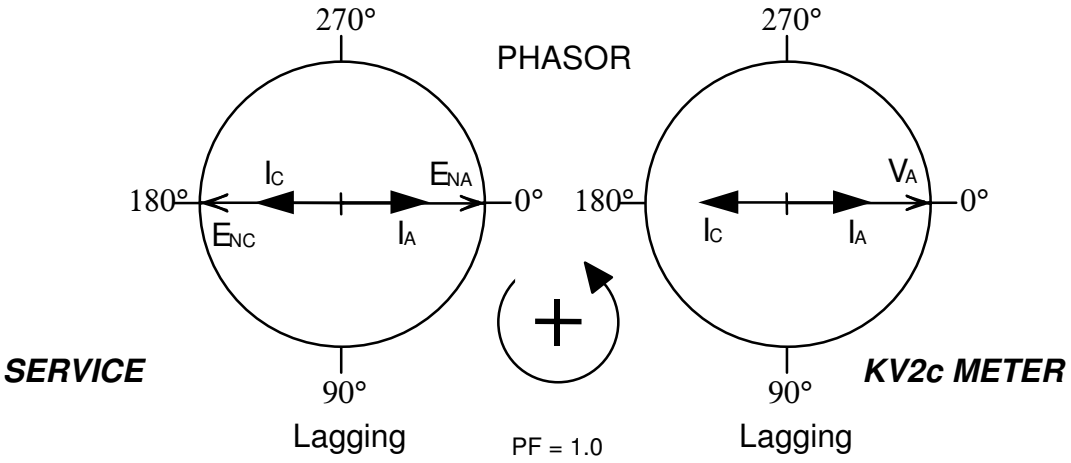

Actual installation procedures, equipment, and connections must to applicable codes and

3-wire, 1-phase, 1-element

MO 2–1

KV2c Site Analysis

Form 3S *(Transformer Rated)*

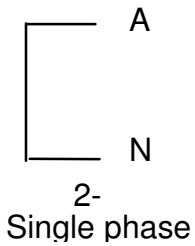

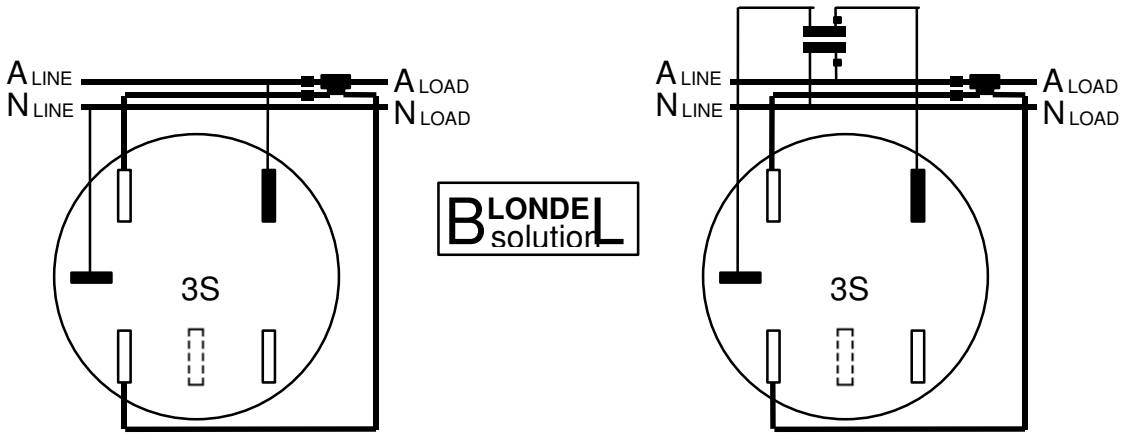

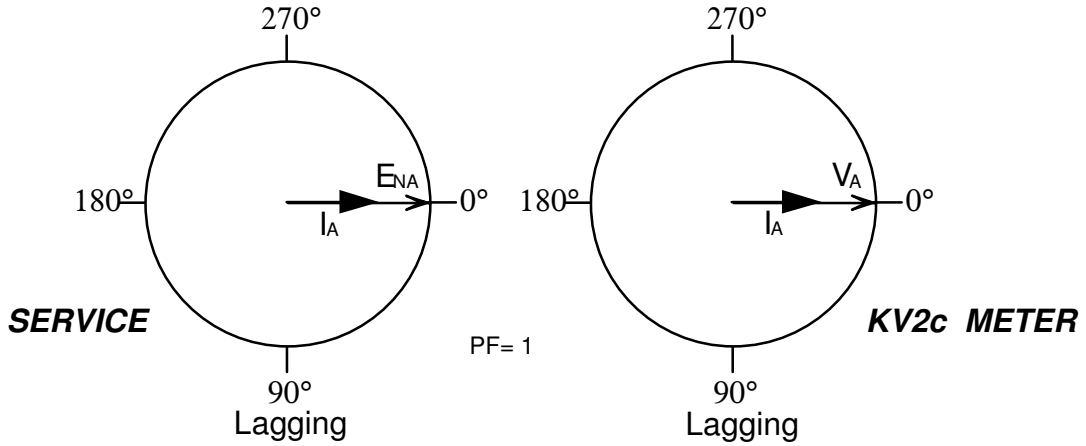

Actual installation procedures, equipment, and connections must to applicable codes and standards

2-wire, 1-phase, 1-element

MO 3-5

KV2c Site Analysis

Form 3S *(Transformer Rated)*

3-
Singlephase

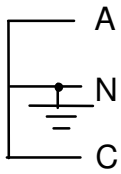

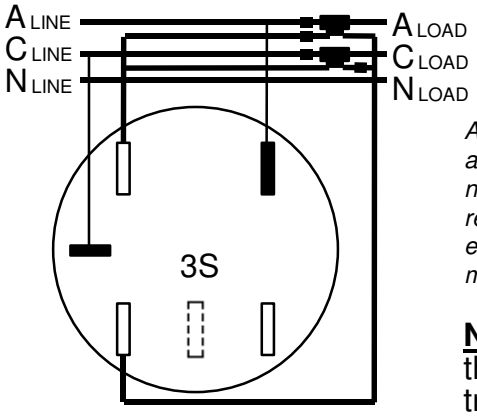

Accuracy is based on assumptions which, if not fulfilled, may result in systematic errors unrelated to meter calibration.

NOT: Use the CTs' ratio transformer in meter except for–wire CTs.

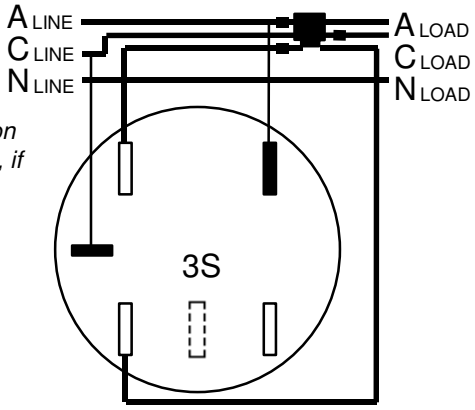

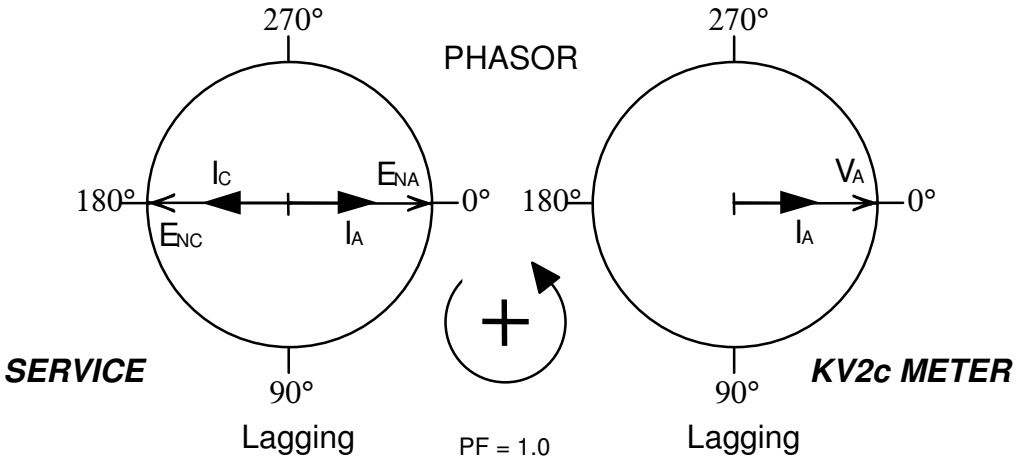

Actual installation procedures, equipment, and connections must to applicable codes and standards

3-wire, 1-phase, 1-element

MO 3–5

KV2c Site Analysis

Form 4S *(Transformer Rated)*

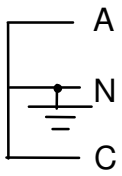

3-Wire
Singlephase

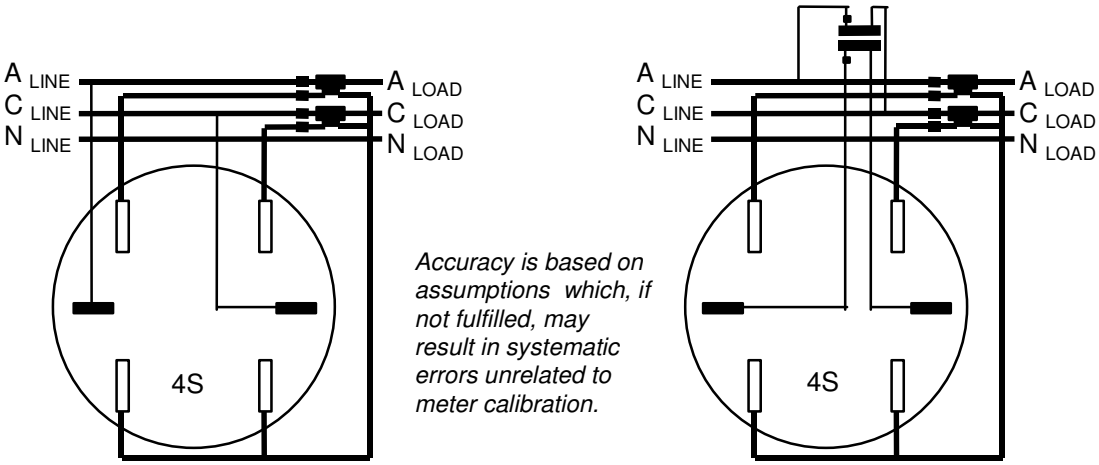

Accuracy is based on assumptions which, if not fulfilled, may result in systematic errors unrelated to meter calibration.

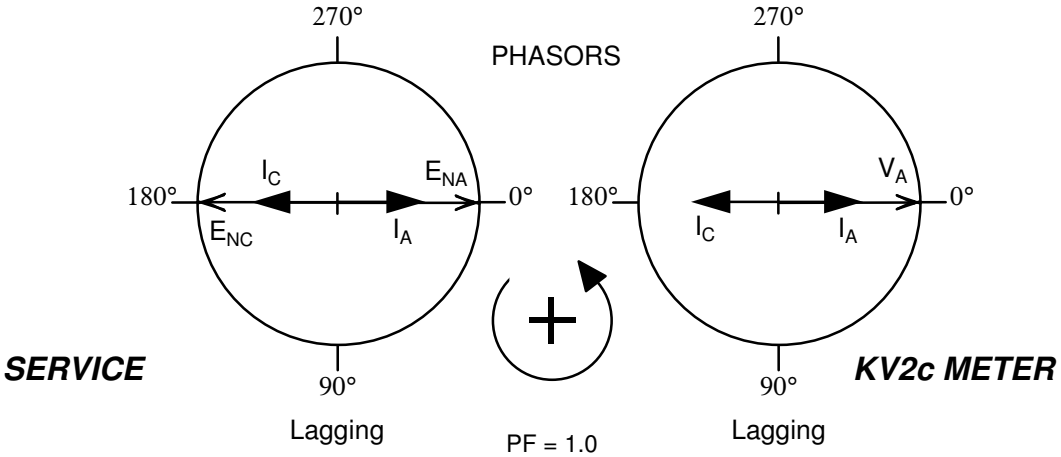

Actual installation procedures, materials, equipment, and connections must conform to applicable codes and standards

3-wire, 1-phase, 1-element

MO 2–1

KV2c Site Analysis

Form 9S *(Transformer Rated)*

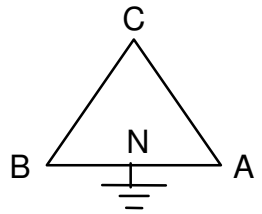

4-Wire, Delta

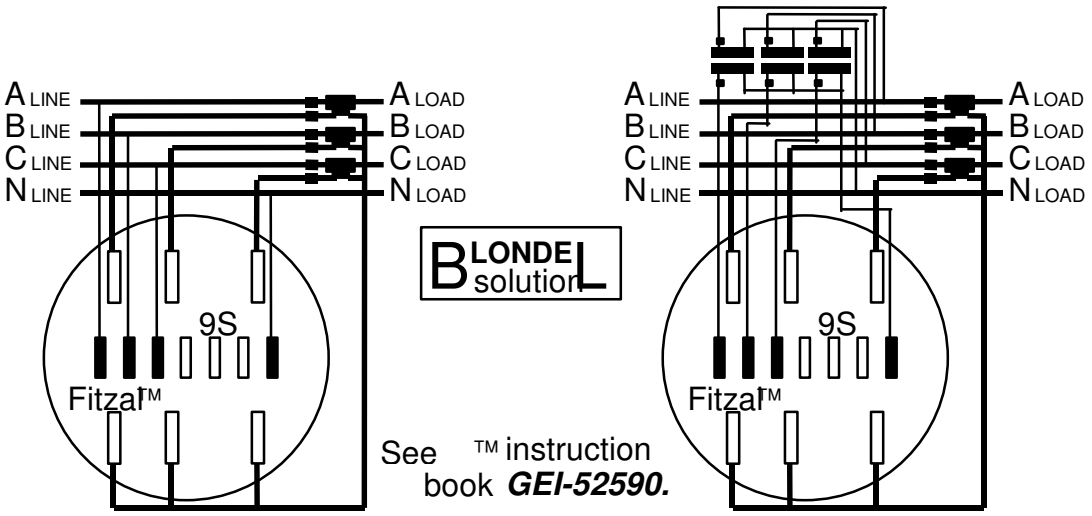

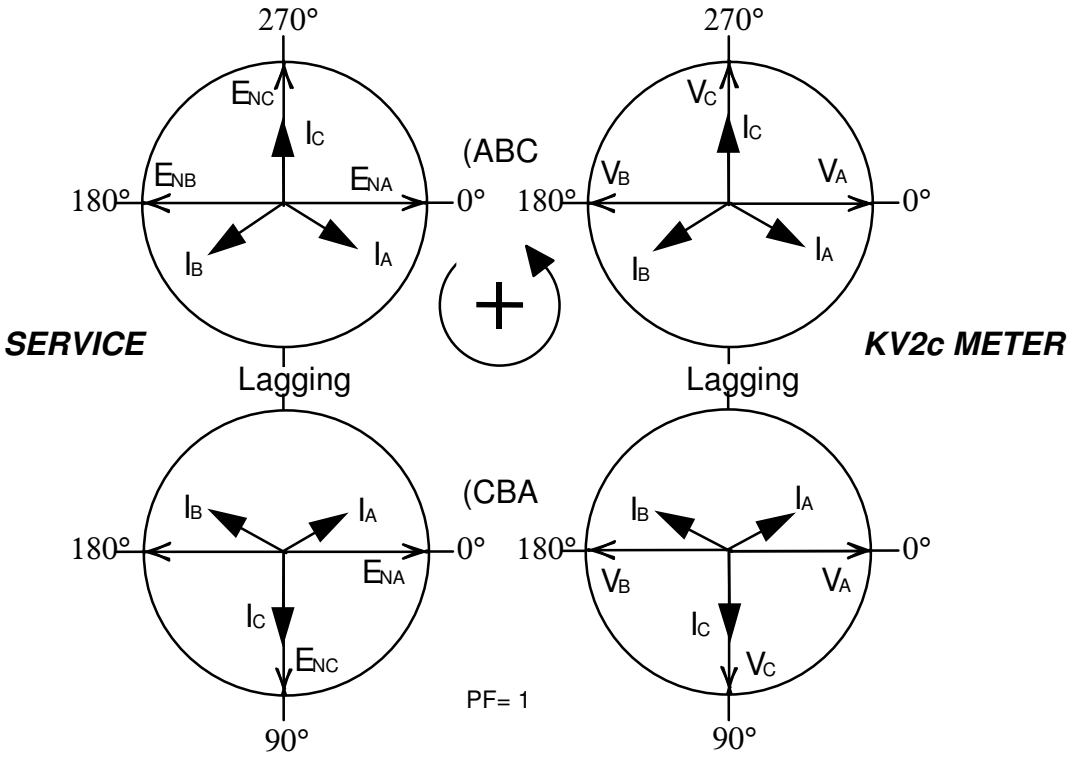

Actual installation procedures, equipment, and connections must to applicable codes and standards

4-wire, 3-Element

MO 9-6

KV2c Site Analysis

Form 9S *(Transformer Rated)*

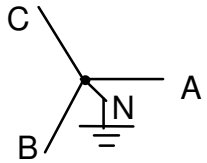

4-Wire, Wye

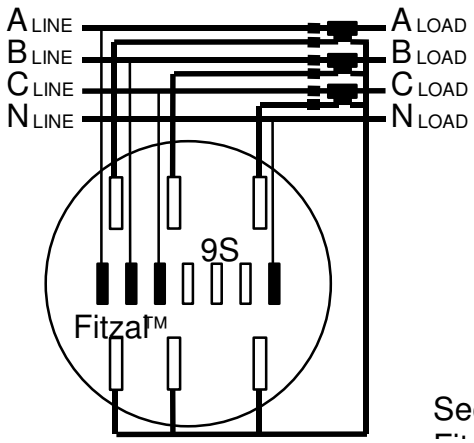

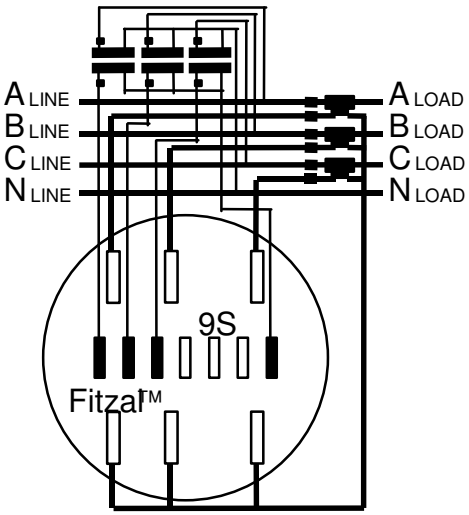

BLONDEL solution

See ™ instruction
book ***GEI-52590.***

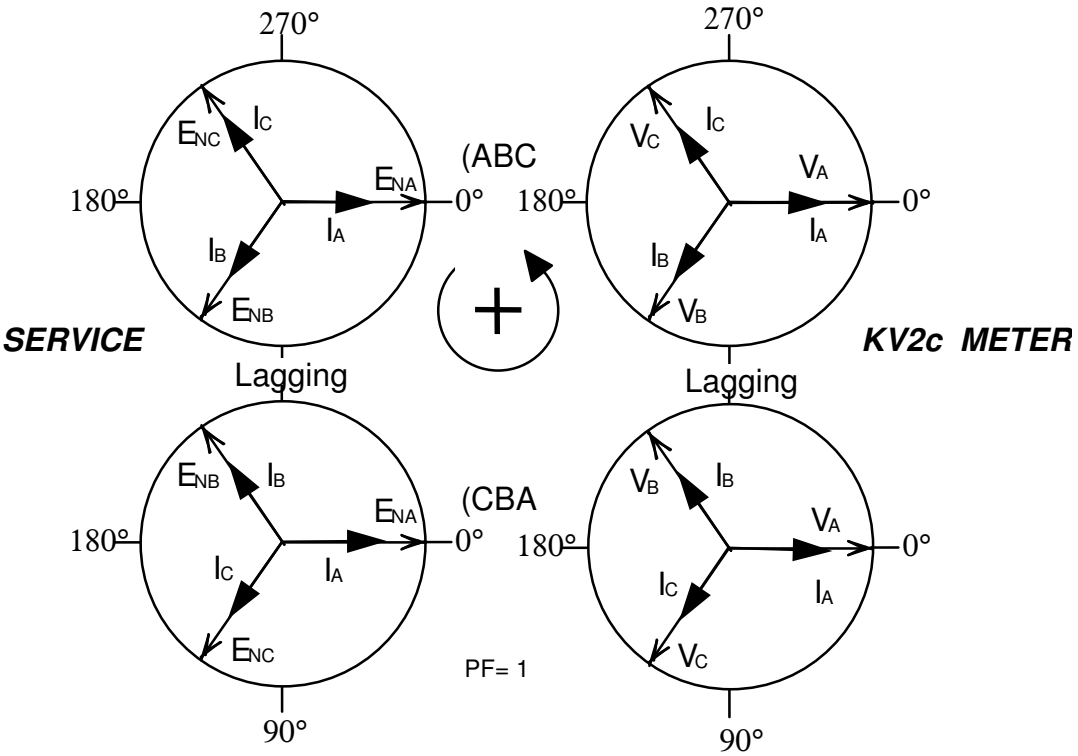

Actual installation procedures, equipment, and connections must to applicable codes and standards

4-wire, 3-Element

MO 9-6

KV2c Site Analysis

Form 12S *(Self-Contained)*

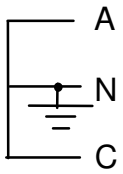

3-Wire Singlephase

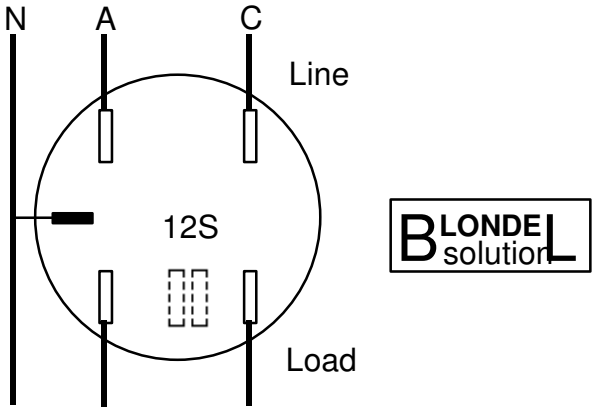

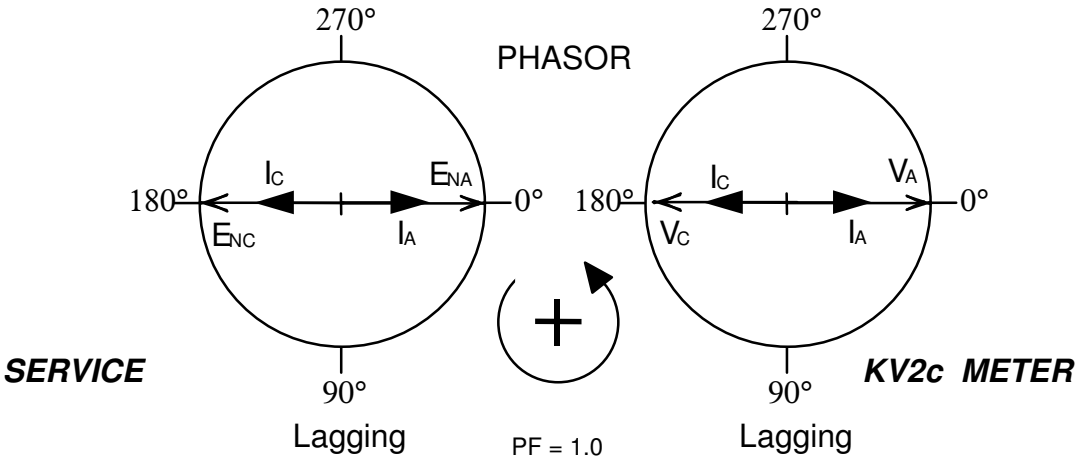

Actual installation procedures, equipment, and connections must to applicable codes and standards

3-wire, 1-phase, 2-element

MO 12-4

KV2c Site Analysis

Form 12S *(Self-Contained)*

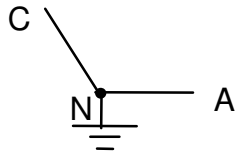

Network

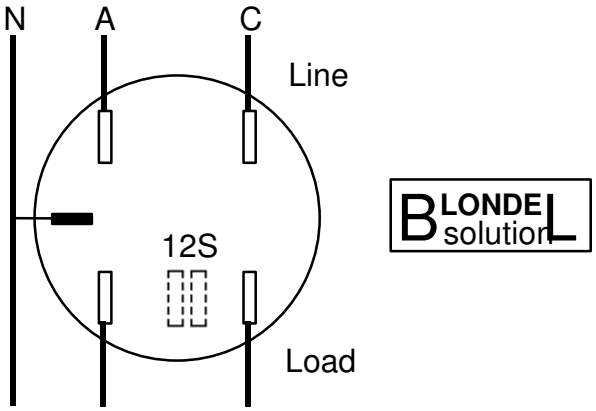

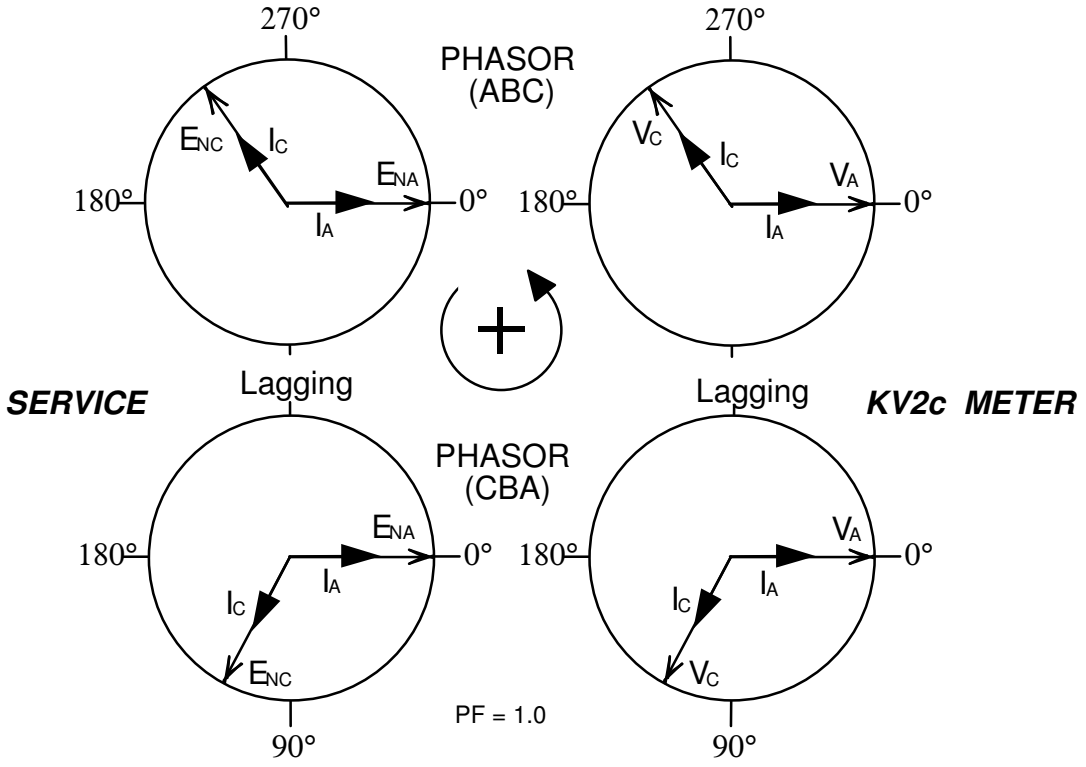

Actual installation procedures, equipment, and connections must to applicable codes and standards

3-wire, Network, 2-element

MO 12-4

KV2c Site Analysis

Form 12S *(Self-Contained)*

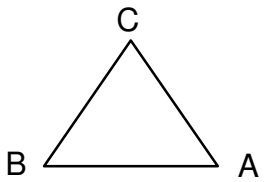

3-Wire, Delta

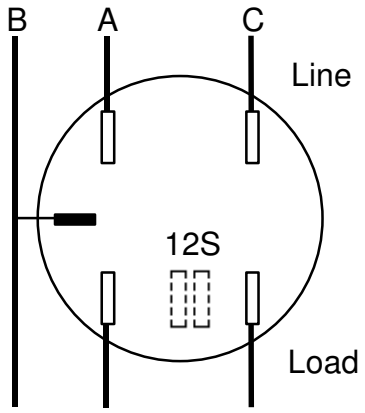

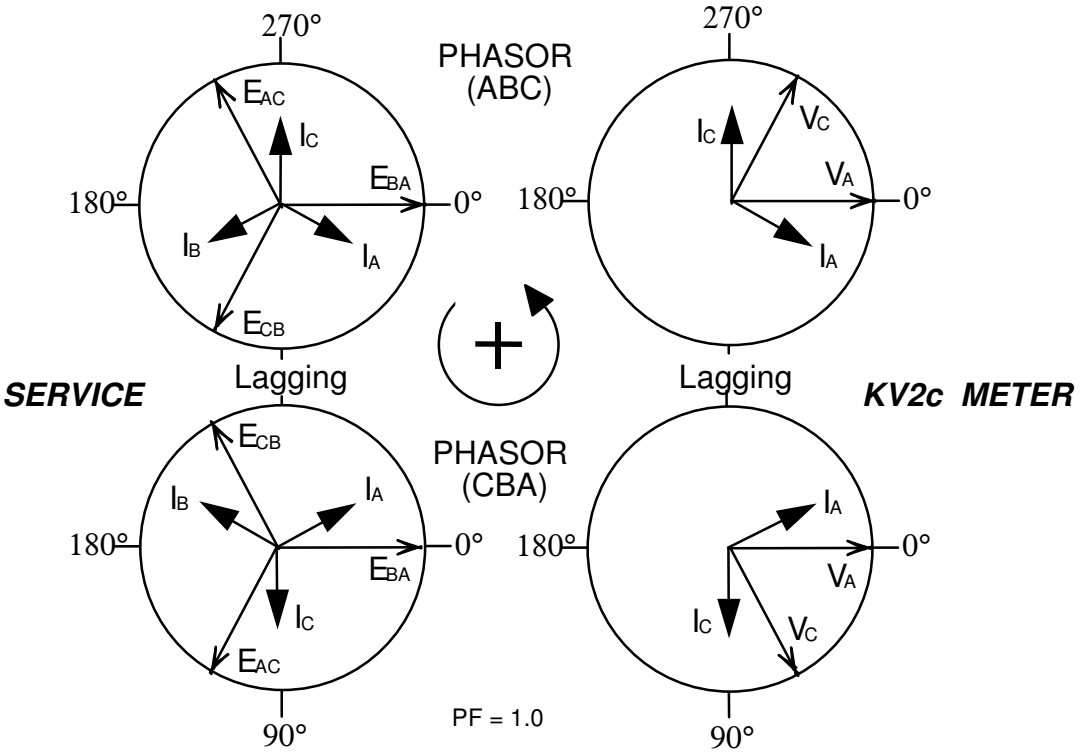

Actual installation procedures, equipment, and connections must to applicable codes and standards

3-wire, 3-phase, 2-element

MO 12-0

KV2c Site Analysis

Form 16S *(Self-Contained)*

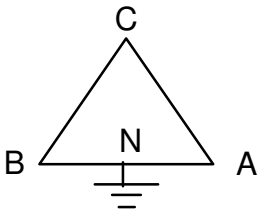

4-Wire, Delta

See ™instruction book ***GEI-52590.***

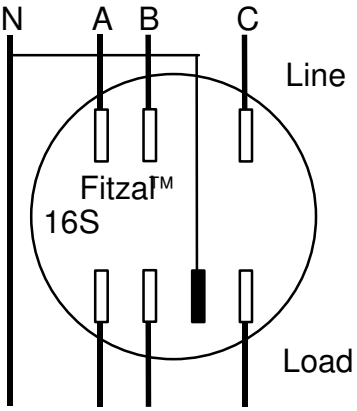

BLONDEL solution

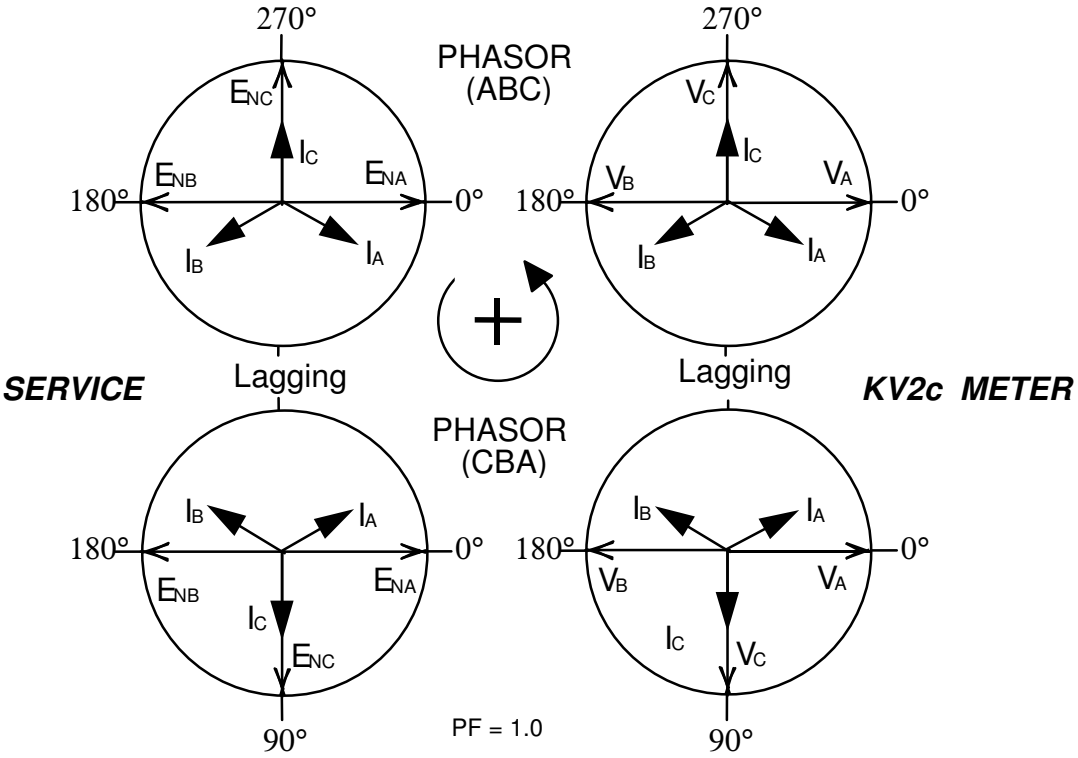

Actual installation procedures, equipment, and connections must to applicable codes and standards

4-wire, 3-Element

MO 16-6

KV2c Site Analysis

Form 16S *(Self-Contained)*

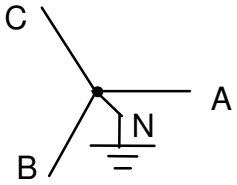

4-Wire, Wye

See™ instruction book ***GEI-52590***

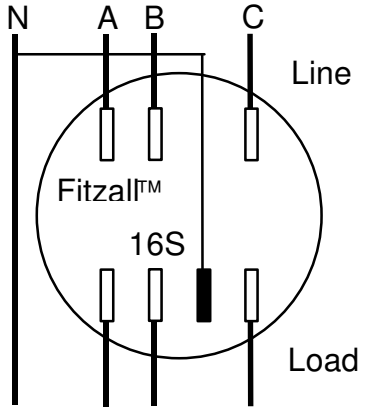

BLONDEL solution

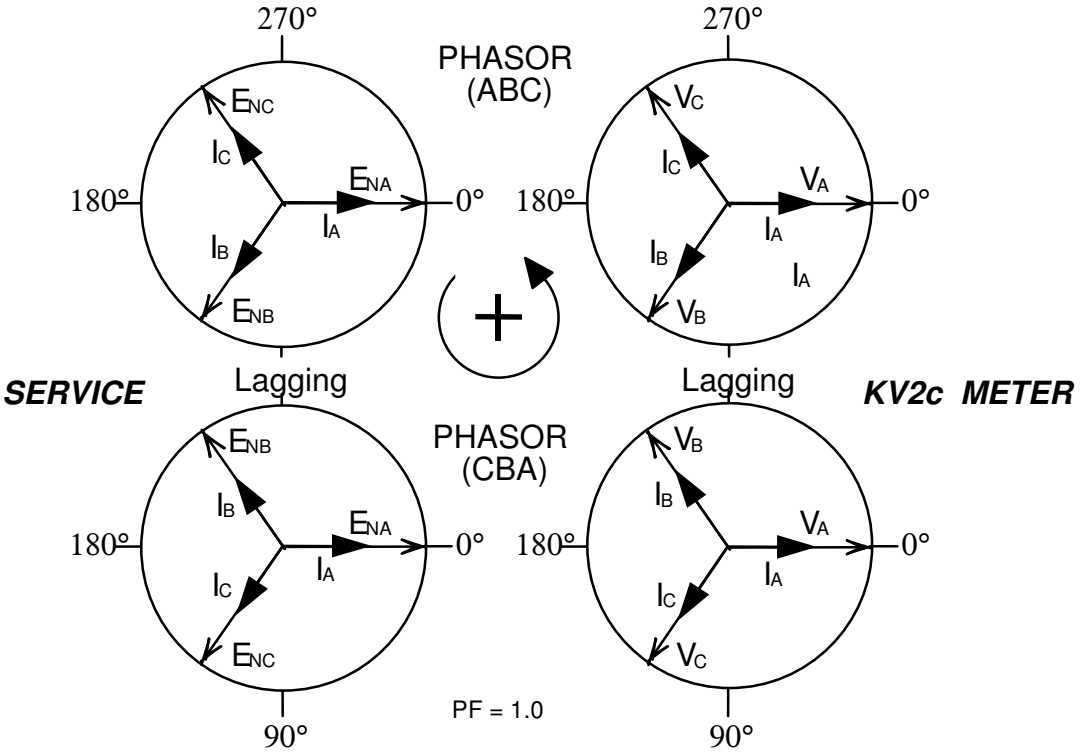

Actual installation procedures, equipment, and connections must to applicable codes and standards

4-wire, 3-Element

MO 16-6

KV2c Site Analysis

Form 36S *(Transformer Rated)*

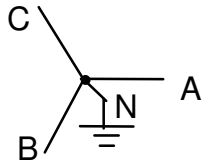

4-Wire, Wye

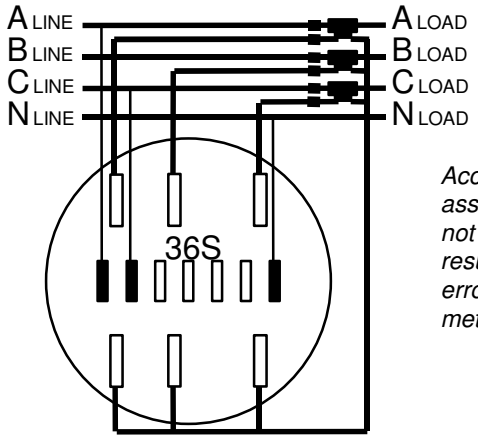

Accuracy is based on assumptions which, if not fulfilled, may result in systematic errors unrelated to meter calibration.

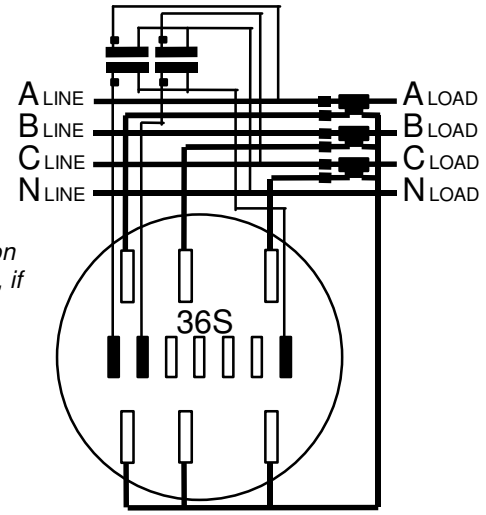

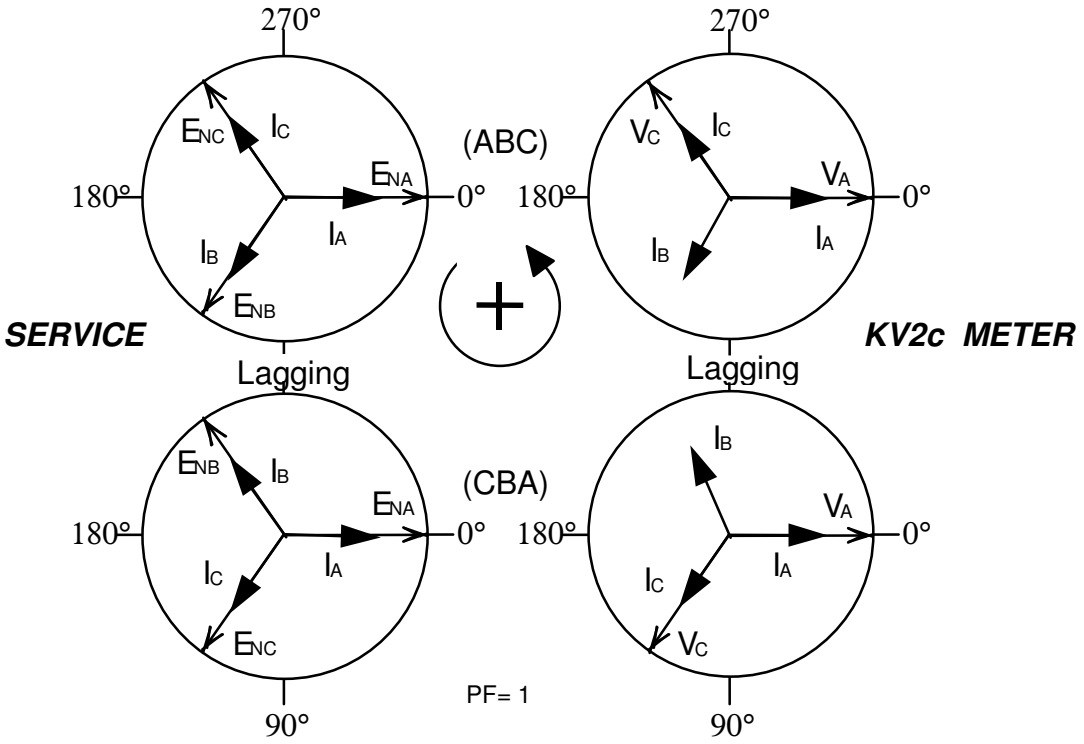

Actual installation procedures, equipment, and connections must to applicable codes and standards

4-wire, wye, 2-1/2-element

MO 36-2

KV2c Site Analysis

Form 45S *(Transformer Rated)*

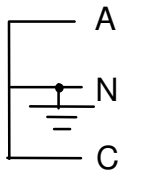

3-Wire
Singlephase

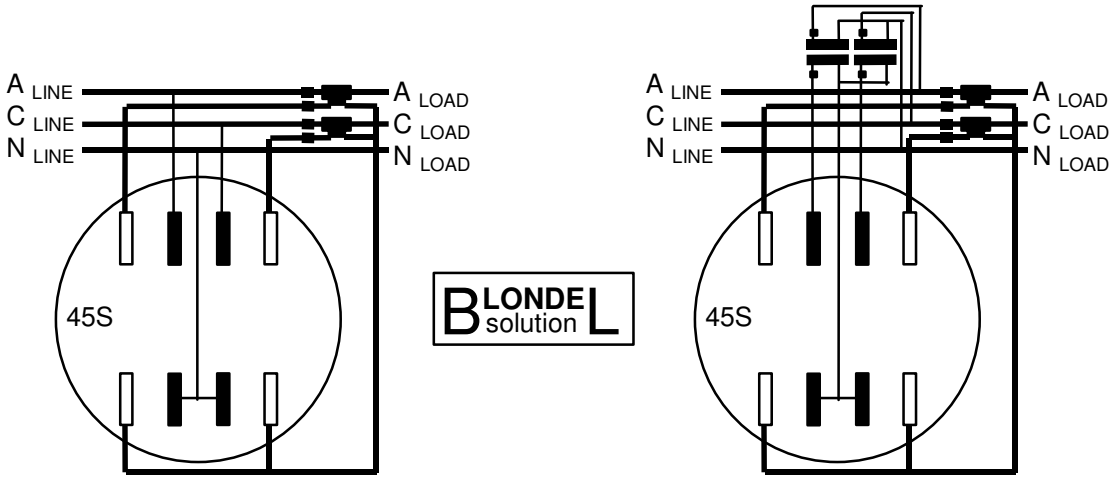

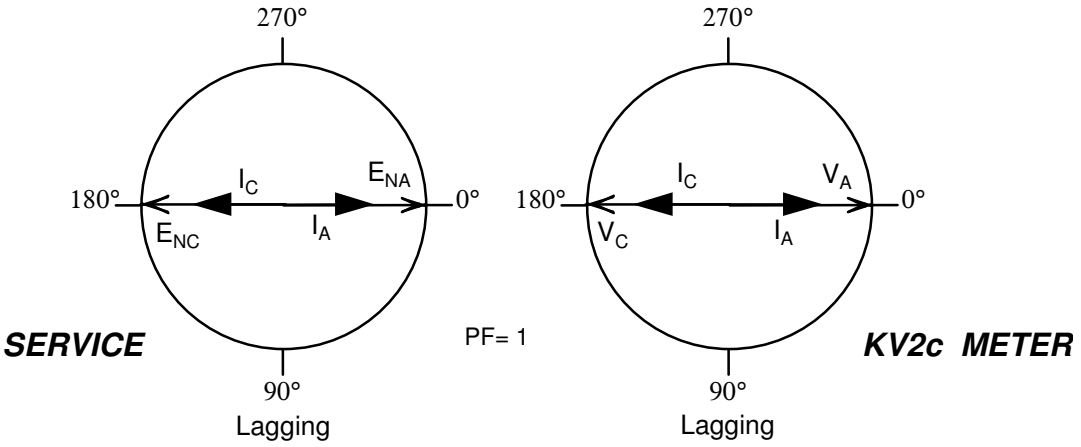

Actual installation procedures, materials, equipment, and connections must conform to applicable codes and standards

3-wire, 1-phase, 2-element

MO 45-3

KV2c Site Analysis

Form 45S *(Transformer Rated)*

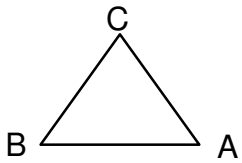

3-Wire, Delta

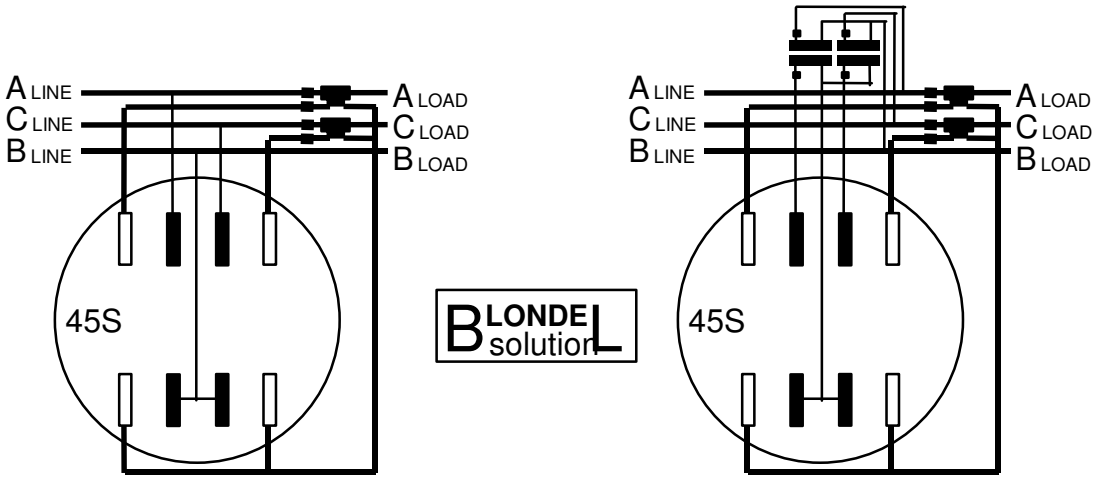

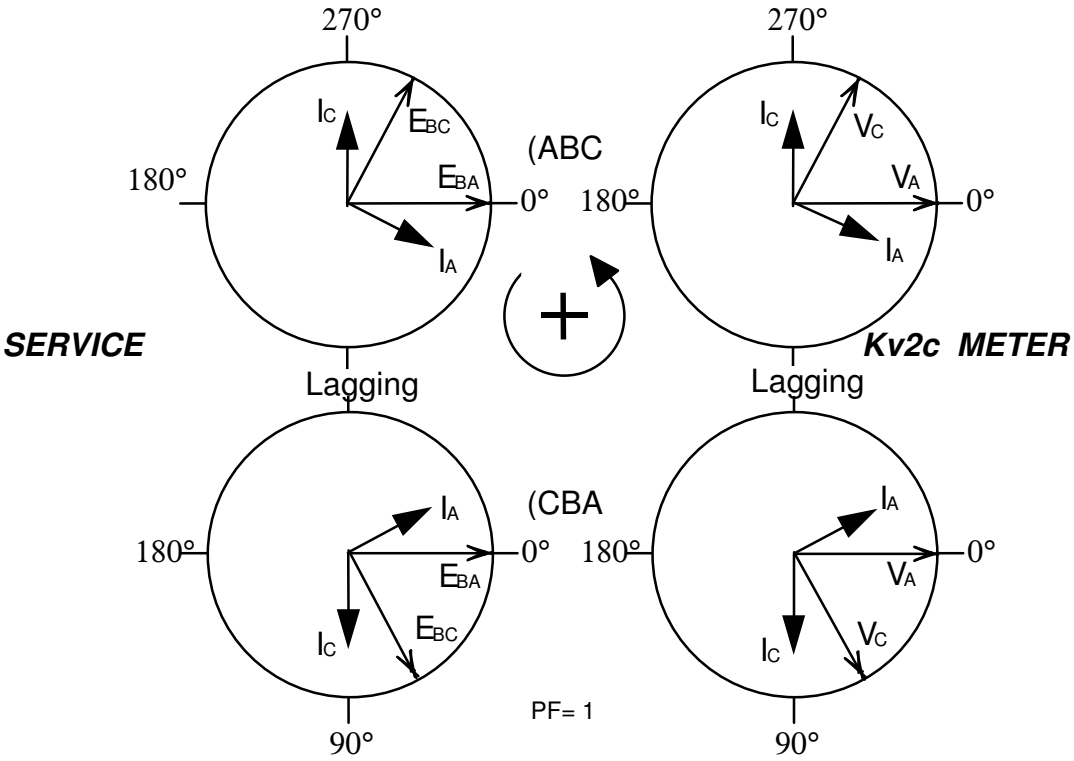

Actual installation procedures, equipment, and connections must to applicable codes and standards

3-wire, 3-phase, 2-element

MO 45-0

KV2c Site Analysis

Form 45S *(Transformer Rated)*

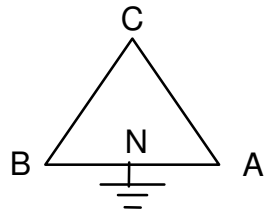

4-Wire, Delta

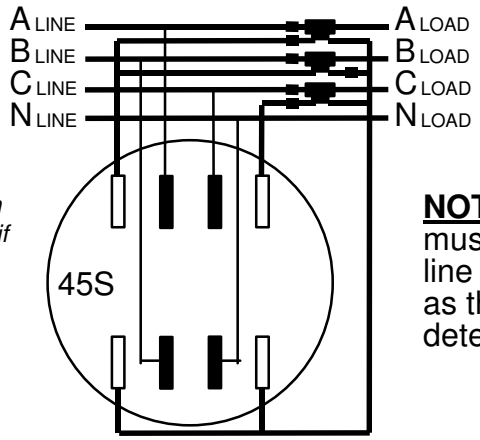

Accuracy is based on assumptions which, if not fulfilled, may result in systematic errors unrelated to meter calibration.

NOT : The CTs in lines A must be twice the ratio of the line C. Use the ratio of CT in as the transformer determining the multiplier.

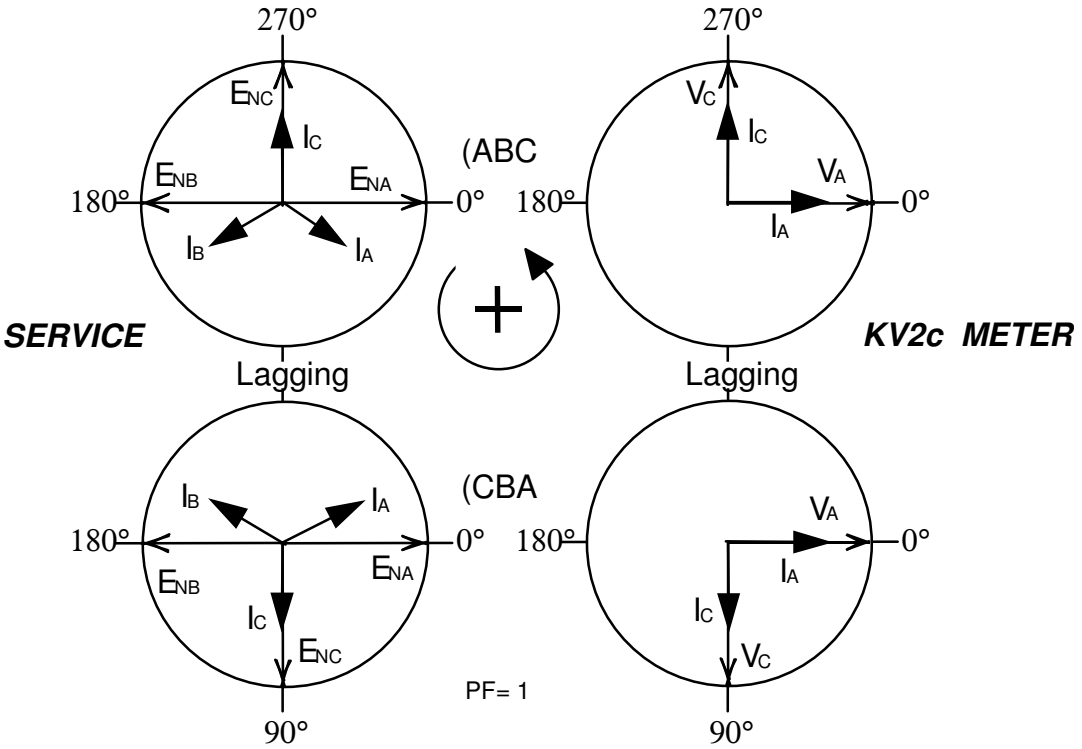

Actual installation procedures, equipment, and connections must to applicable codes and standards

4-wire, delta, 2-element

MO 45-3

KV2c Site Analysis

Form 45S *(Transformer Rated)*

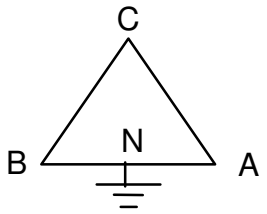

4-Wire, Delta

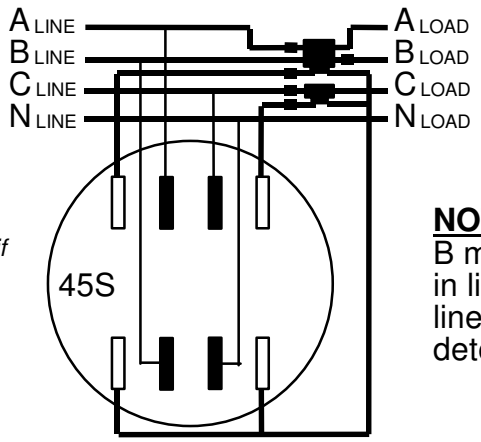

Accuracy is based on assumptions which, if not fulfilled, may result in systematic errors unrelated to meter calibration.

NOT : A window CT in lines B must be twice the ratio of in line C. Use the ratio of line C as the transformer determining the multiplier.

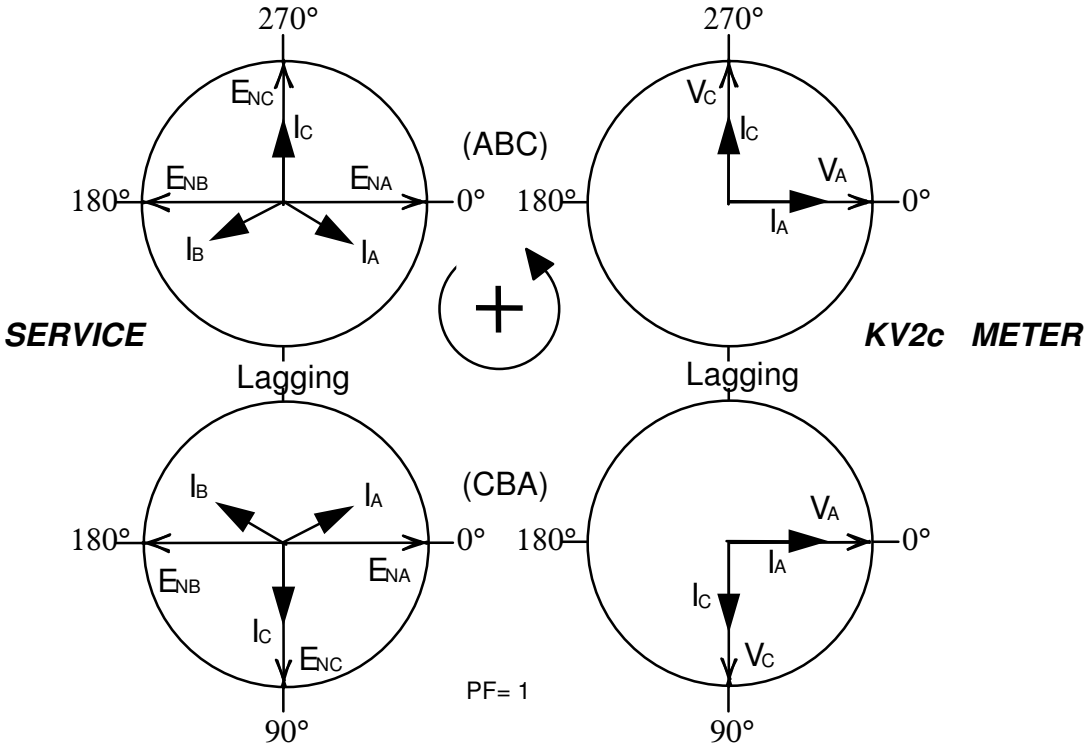

Actual installation procedures, equipment, and connections must to applicable codes and standards

4-wire, delta, 2-element

MO 45-3

KV2c Site Analysis

Form 45S *(Transformer Rated)*

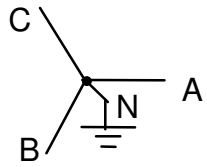

4-Wire, Wye

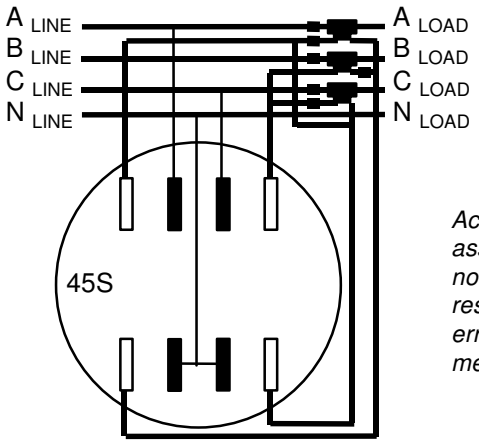

Accuracy is based on assumptions which, if not fulfilled, may result in systematic errors unrelated to meter calibration.

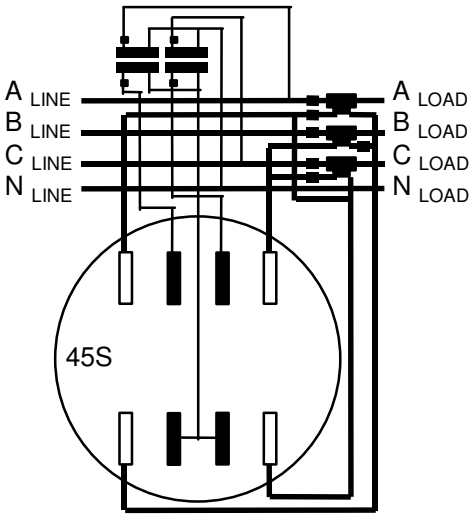

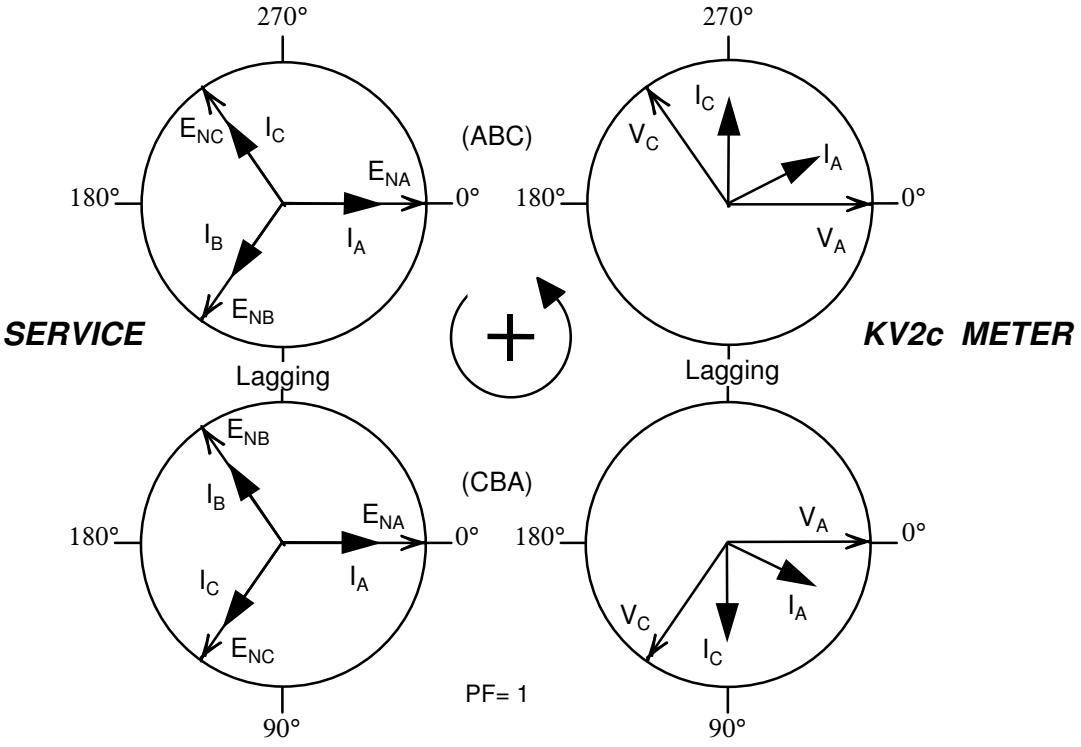

Actual installation procedures, materials, equipment, and connections must conform to applicable codes and standards

4-wire, wye, 2-element

MO 45-3

KV2c Site Analysis

Form 45S *(Transformer Rated)*

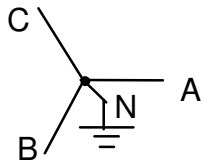

4-Wire, Wye

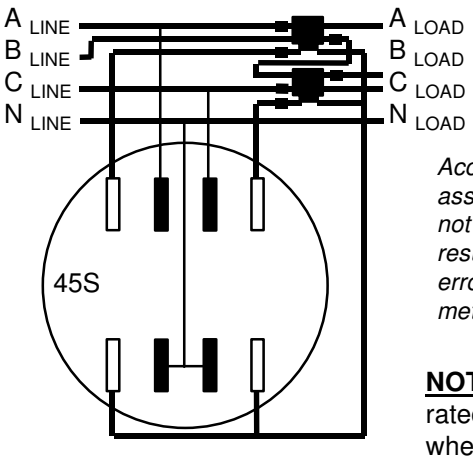

Accuracy is based on assumptions which, if not fulfilled, may result in systematic errors unrelated to meter calibration.

NOTE: For 3–wire CTs rated x&x:5, use 2x:5 when calculating TF.

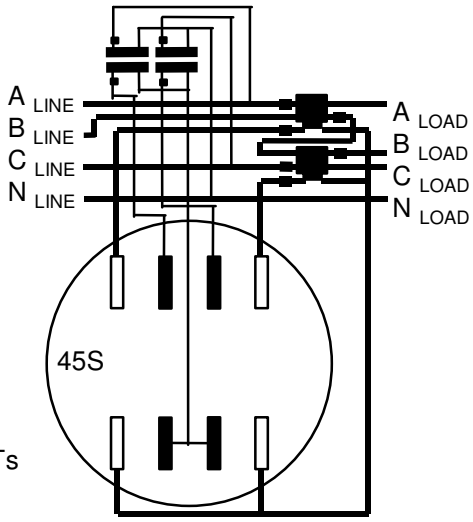

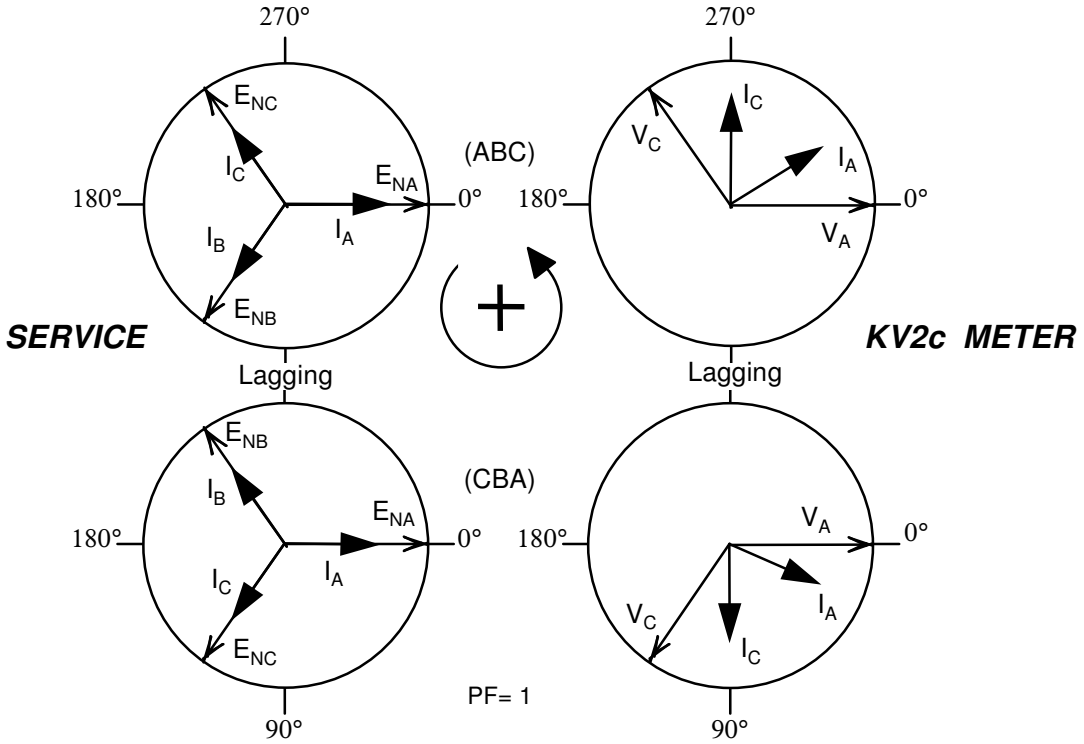

Actual installation procedures, materials, equipment, and connections must conform to applicable codes and standards

4-wire, wye, 2-element

MO 45-3

KV2c Site Analysis

Form 45S *(Transformer Rated)*

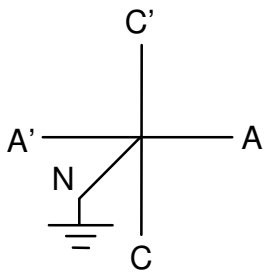

5-Wire, 2-Phase

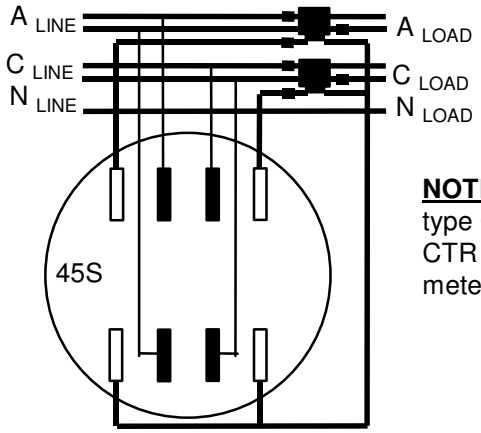

Accuracy is based on assumptions which, if not fulfilled, may result in systematic errors unrelated to meter calibration.

NOTE: For window type CTs, use half the CTR in determining meter multiplier.

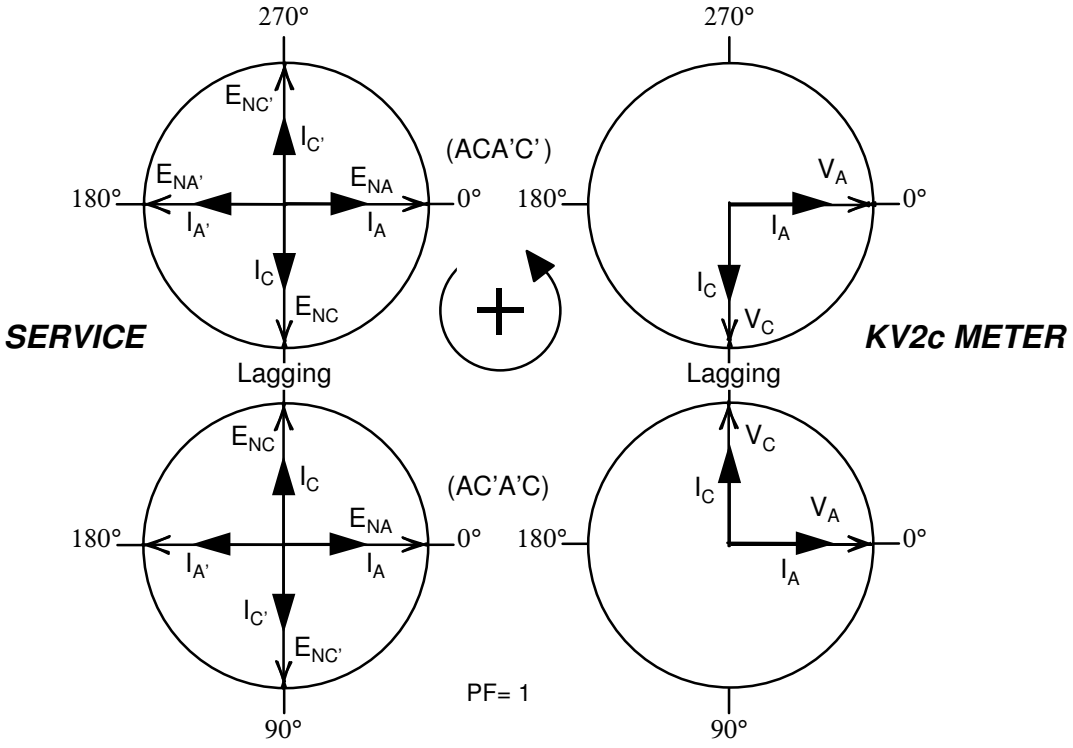

Actual installation procedures, materials, equipment, and connections must conform to applicable codes and standards

5-wire, 2-phase, 2-element

MO 45-3

KV2c Site Analysis

Form 56S *(Transformer Rated)*

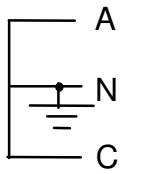

3-Wire
Singlephase

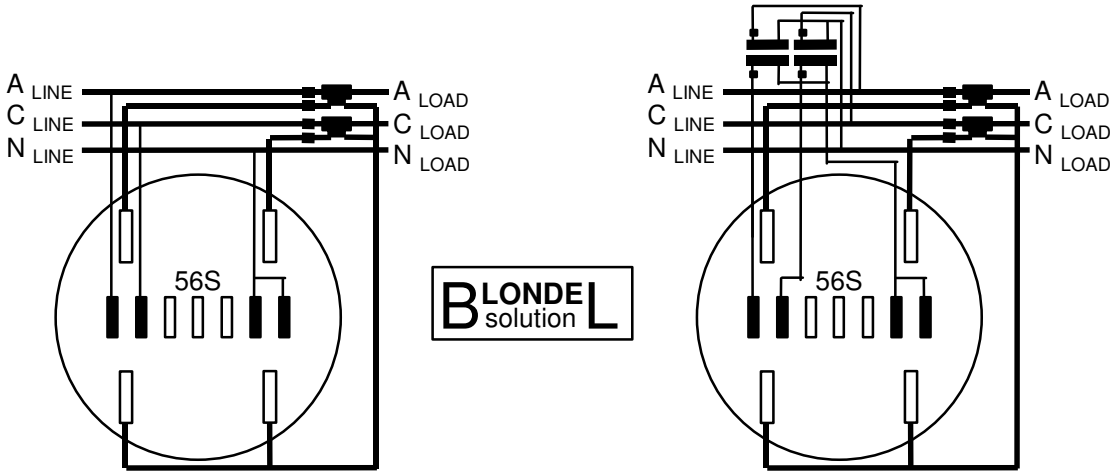

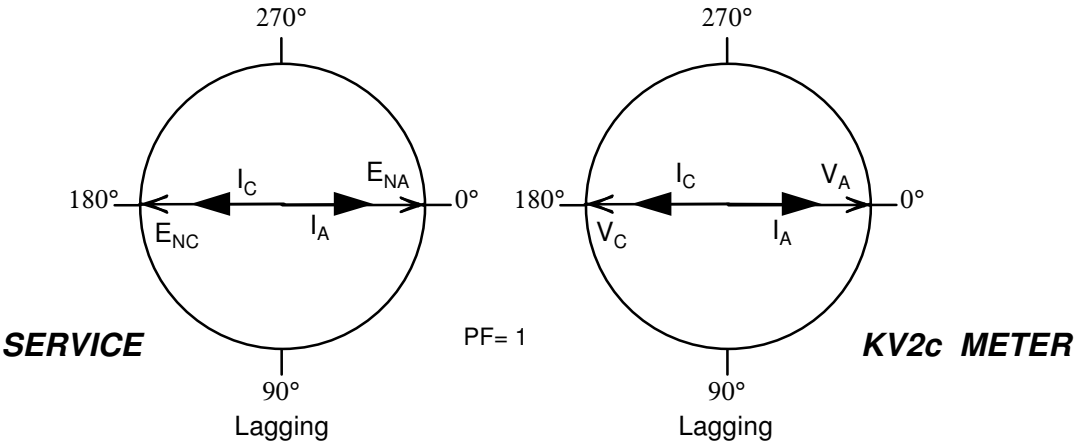

Actual installation procedures, materials, equipment, and connections must conform to applicable codes and standards

3-wire, 1-phase, 2-element

MO 45-3

KV2c Site Analysis

Form 56S *(Transformer Rated)*

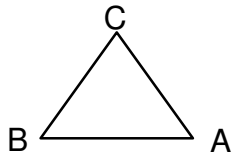

3-Wire, Delta

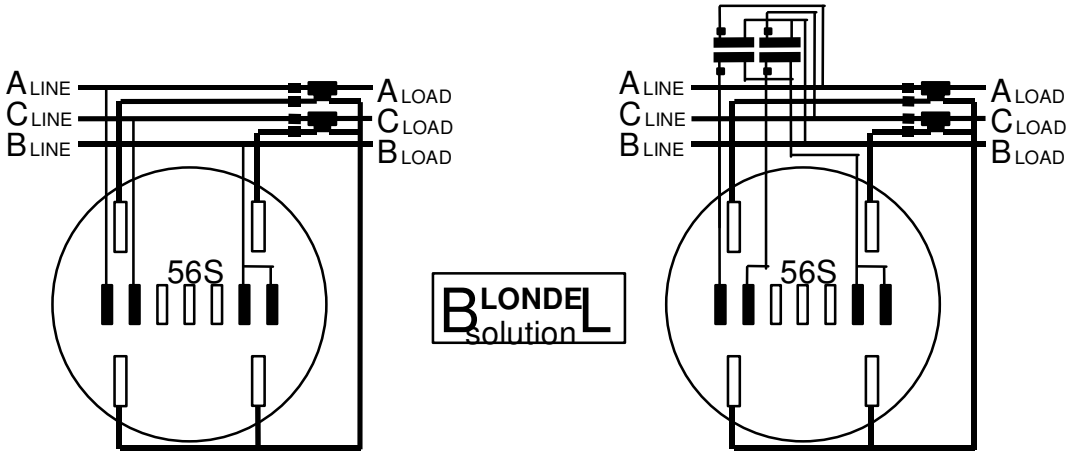

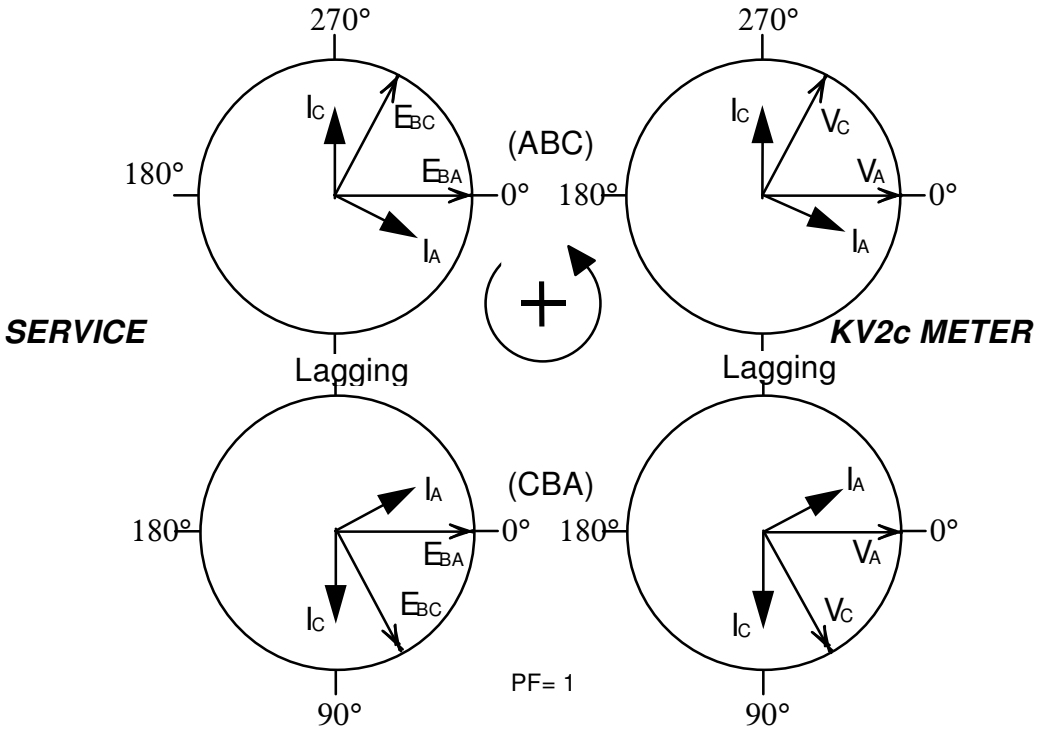

Actual installation procedures, equipment, and connections must to applicable codes and standards

3-wire, 3-phase, 2-element

MO 45-0

KV2c Site Analysis

Form 56S *(Transformer Rated)*

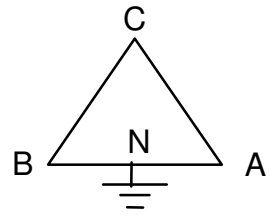

4-Wire, Delta

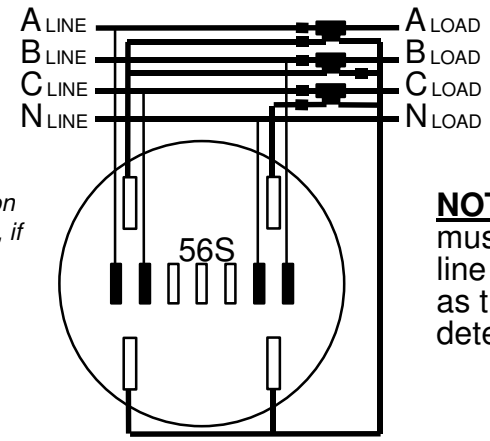

Accuracy is based on assumptions which, if not fulfilled, may result in systematic errors unrelated to meter calibration.

NOT : The CTs in lines A must be twice the ratio of the line C. Use the ratio of CT in as the transformer determining the multiplier.

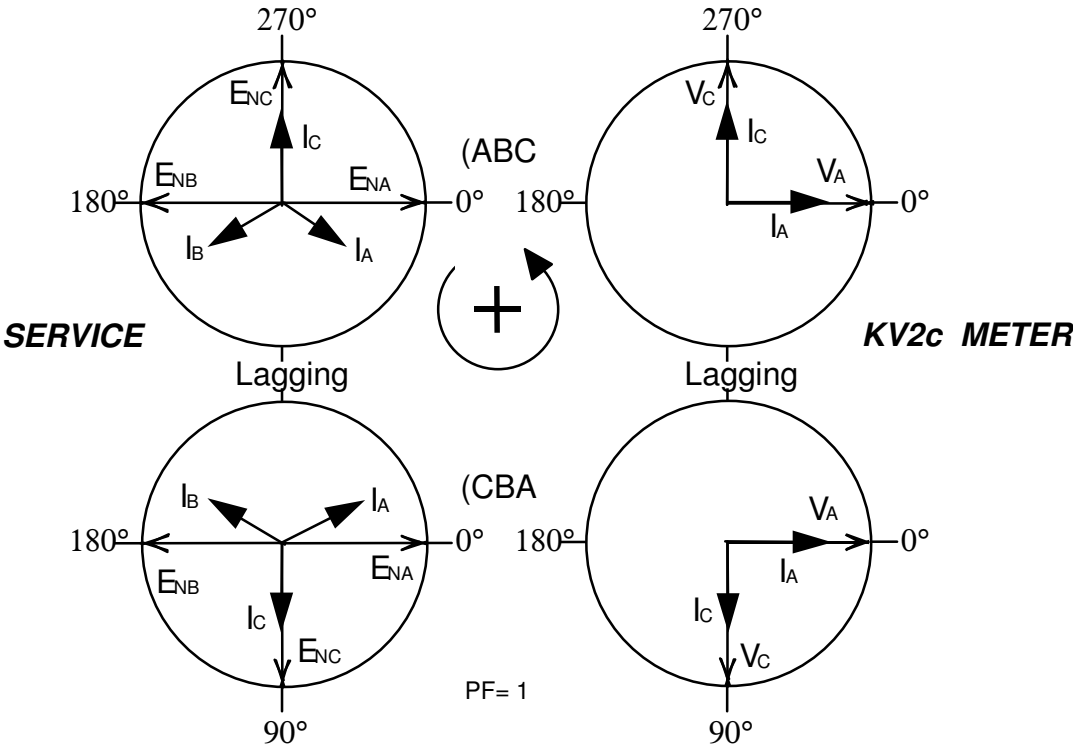

Actual installation procedures, equipment, and connections must to applicable codes and standards

4-wire, delta, 2-element

MO 45-3

KV2c Site Analysis

Form 56S *(Transformer Rated)*

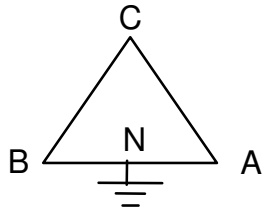

4-Wire, Delta

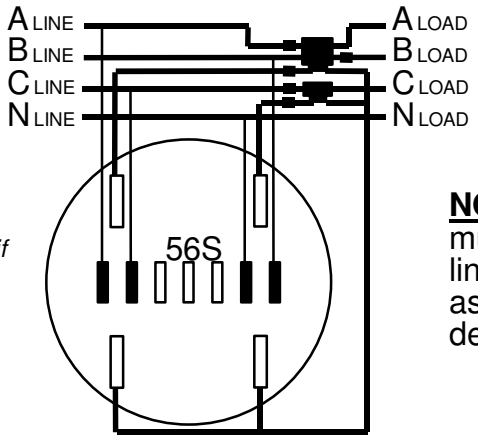

Accuracy is based on assumptions which, if not fulfilled, may result in systematic errors unrelated to meter calibration.

NOT : A window CT in lines A must be twice the ratio of the line C. Use the ratio of CT in as the transformer determining the multiplier.

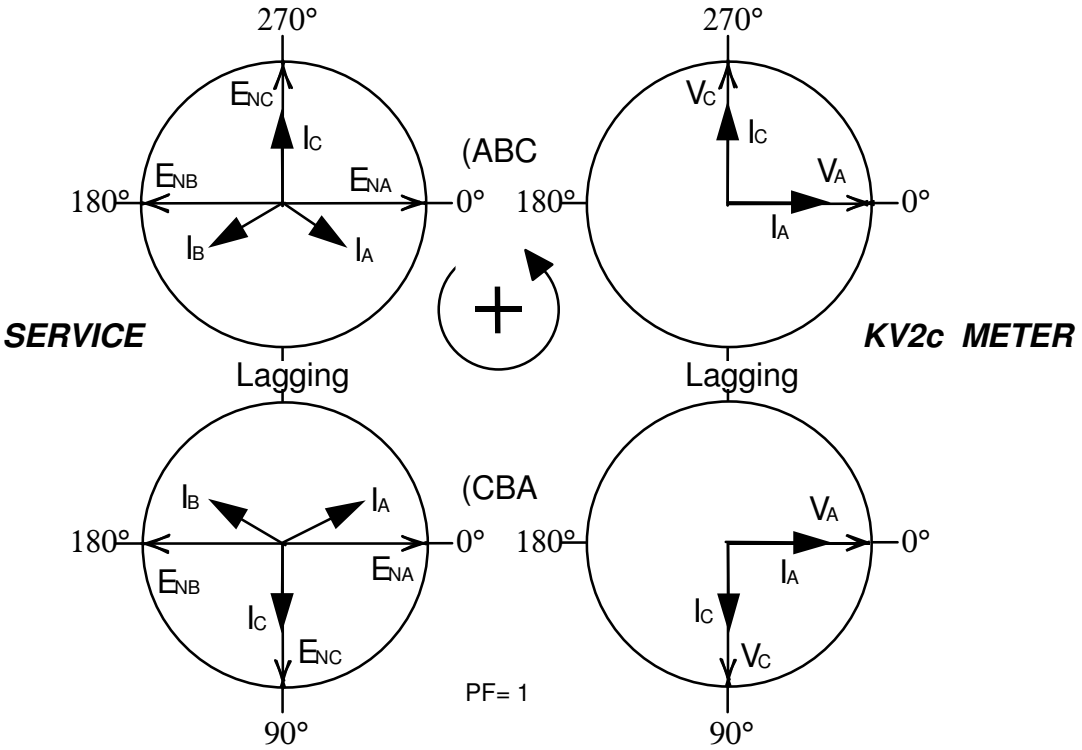

Actual installation procedures, equipment, and connections must to applicable codes and standards

4-wire, delta, 2-element

MO 45-3

KV2c Site Analysis

Form 56S *(Transformer Rated)*

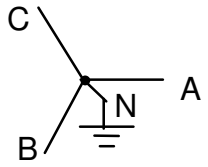

4-Wire, Wye

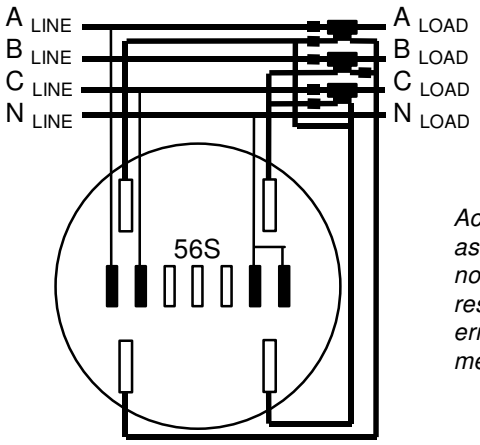

Accuracy is based on assumptions which, if not fulfilled, may result in systematic errors unrelated to meter calibration.

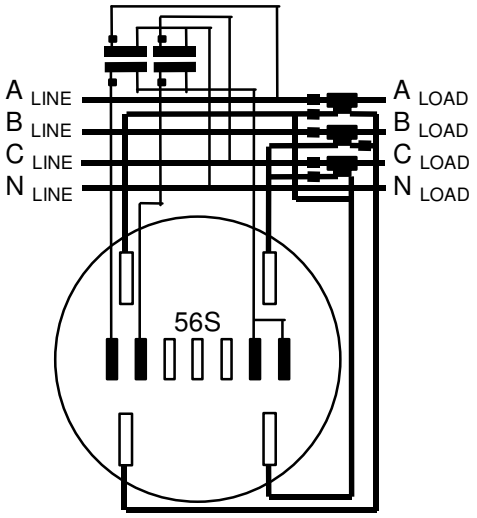

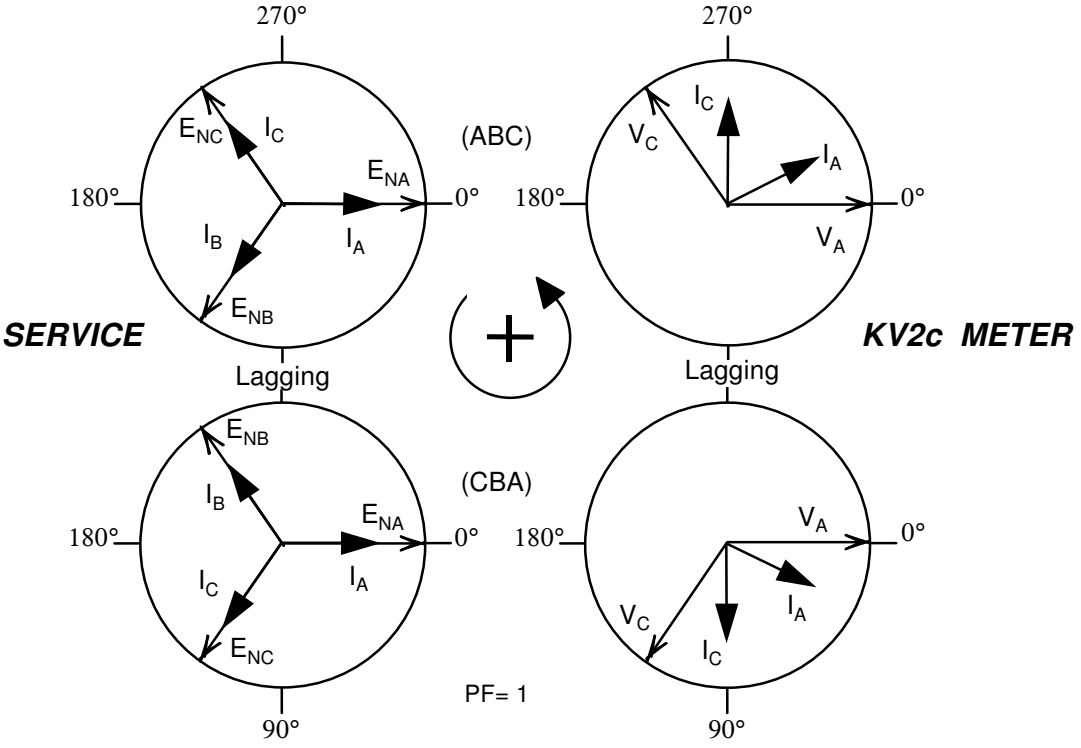

Actual installation procedures, materials, equipment, and connections must conform to applicable codes and standards

4-wire, wye, 2-element

MO 45-3

KV2c Site Analysis

Form 56S *(Transformer Rated)*

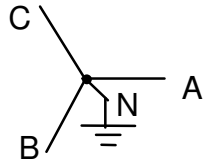

4-Wire, Wye

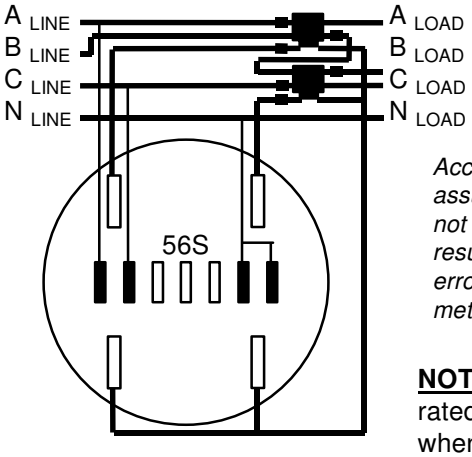

Accuracy is based on assumptions which, if not fulfilled, may result in systematic errors unrelated to meter calibration.

NOTE: For 3–wire CTs rated x&x:5, use 2x:5 when calculating the TF.

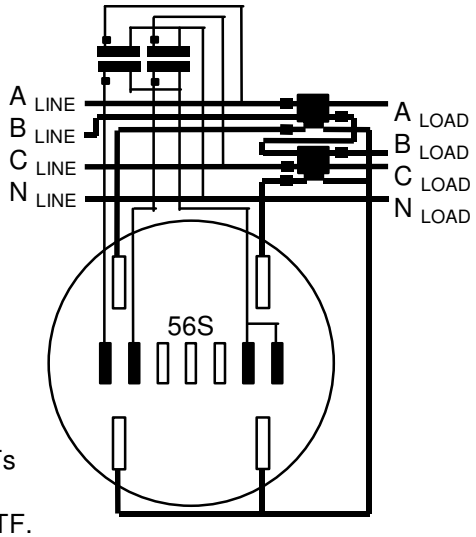

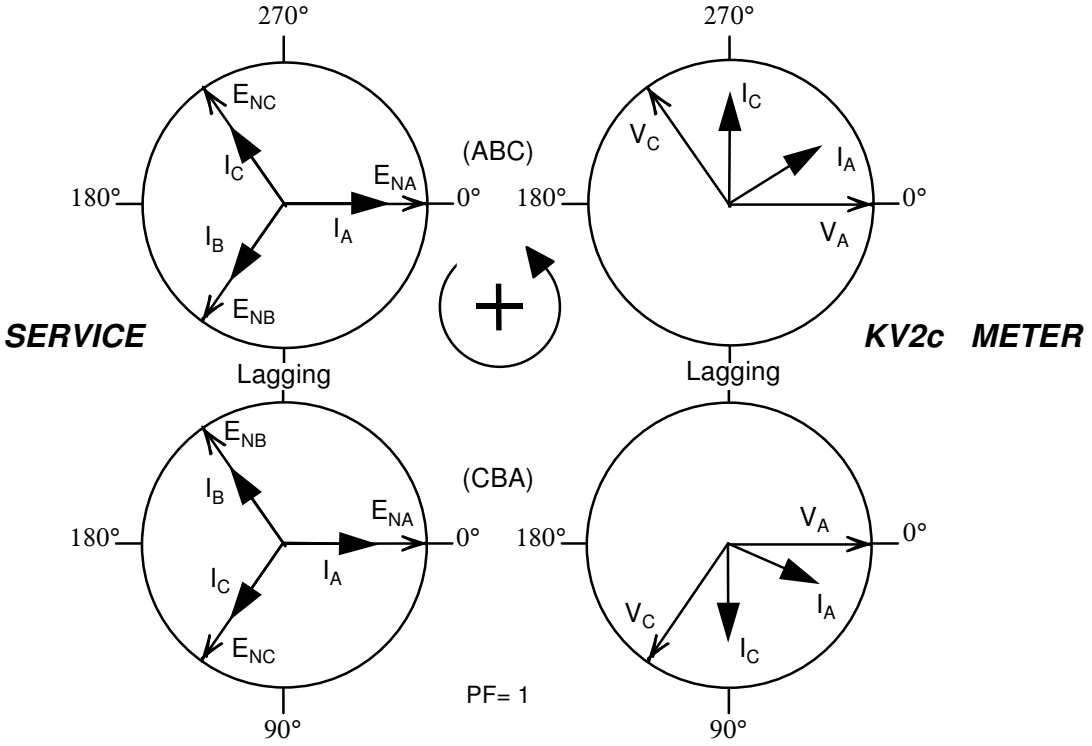

Actual installation procedures, materials, equipment, and connections must conform to applicable codes and standards

4-wire, wye, 2-element

MO 45-3

KV2c Site Analysis

Form 56S *(Transformer Rated)*

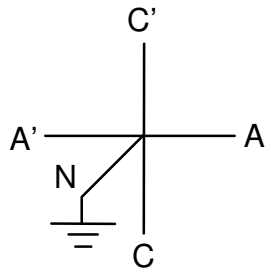

5-Wire, 2-Phase

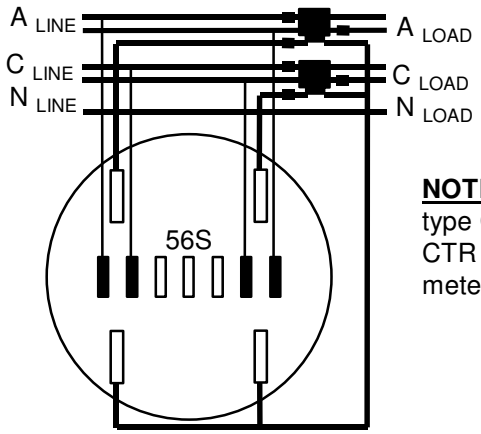

Accuracy is based on assumptions which, if not fulfilled, may result in systematic errors unrelated to meter calibration.

NOTE: For window type CTs use half the CTR in determining meter multiplier.

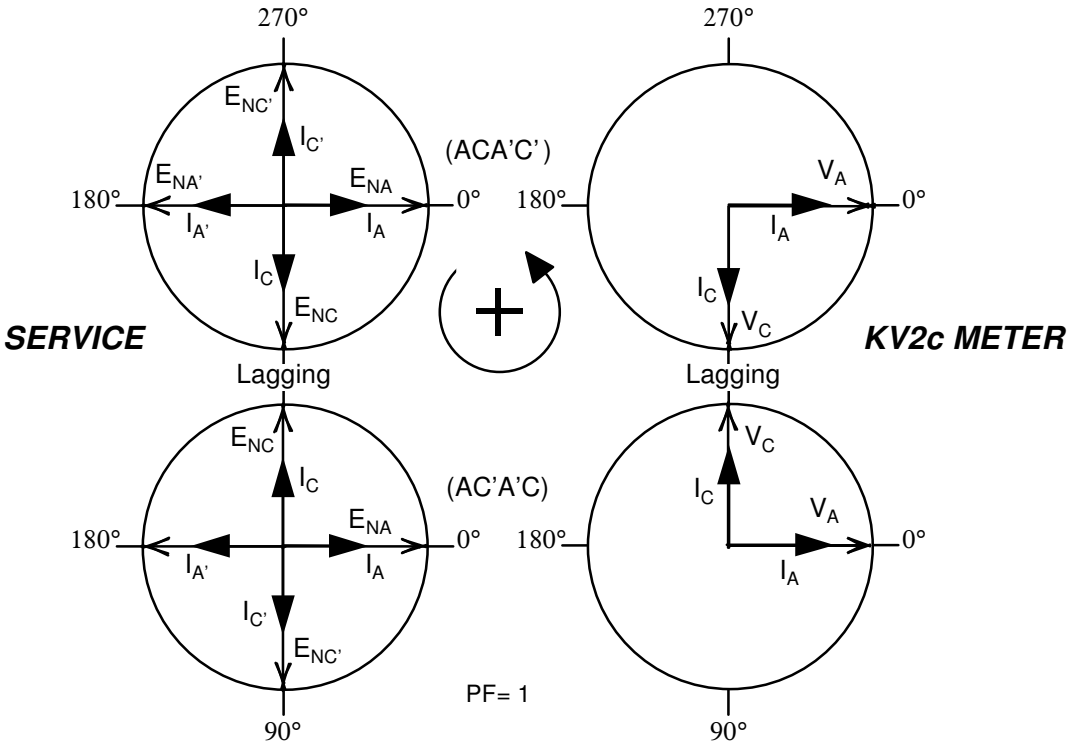

Actual installation procedures, materials, equipment, and connections must conform to applicable codes and standards

5-wire, 2-phase, 2-element

MO 45-3

KV2c Site Analysis

Form 10A *(Transformer Rated)*

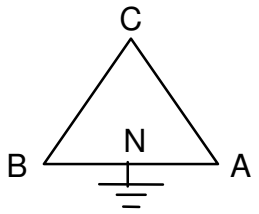

4-Wire, Delta

See Fitzall™ instruction book ***GEI-52590***

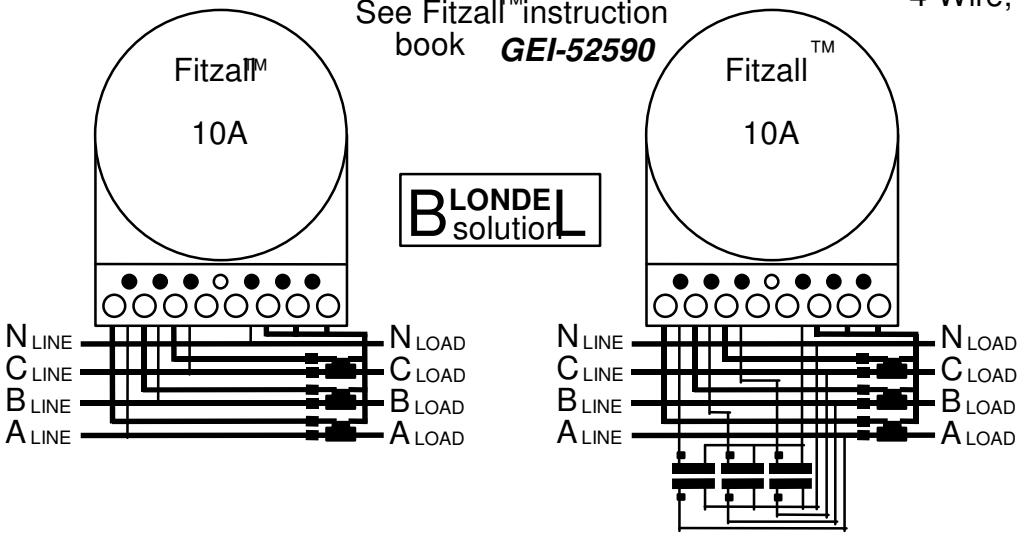

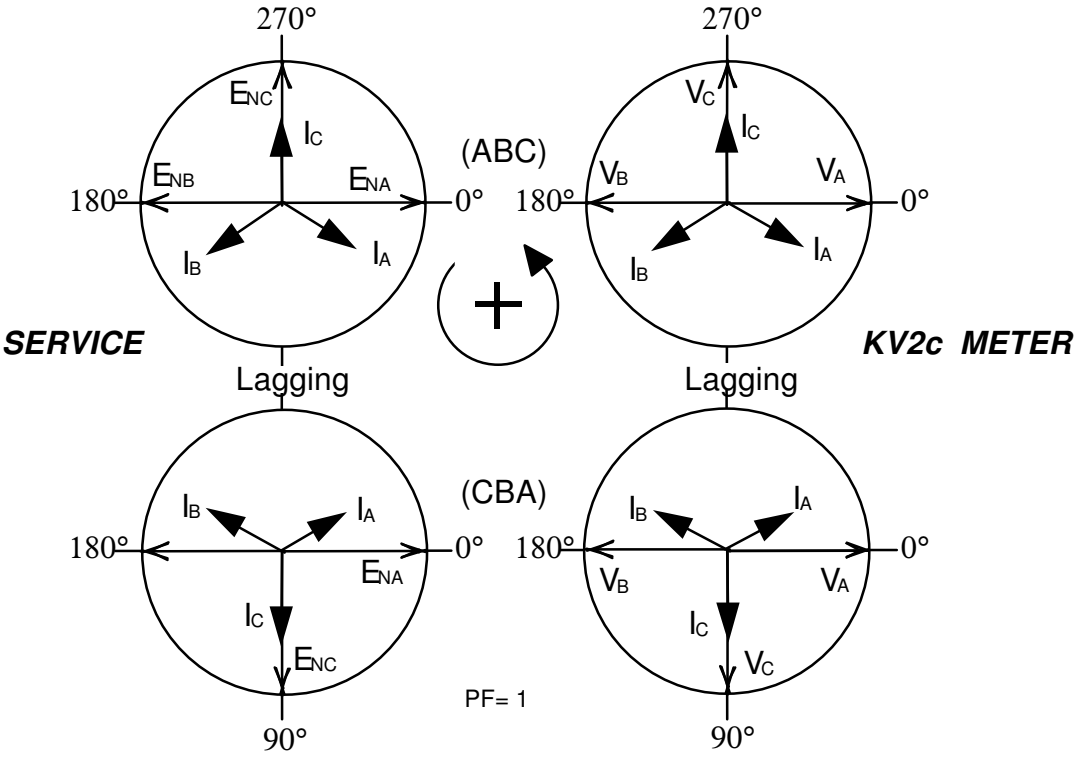

Actual installation procedures, equipment, and connections must to applicable codes and standards

4-wire, 3-Element

MO 9-6

KV2c Site Analysis

Form 10A *(Transformer Rated)*

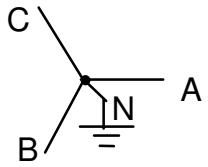

4-Wire, Wye

See ™ instruction book ***GEI-52590***

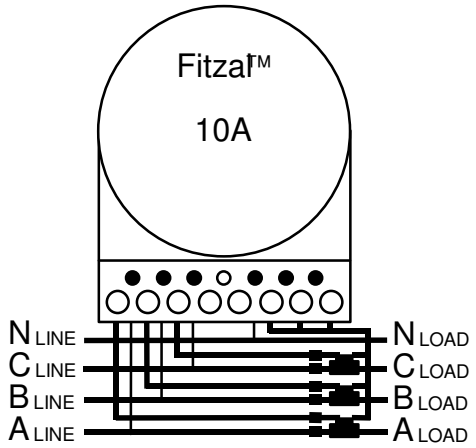

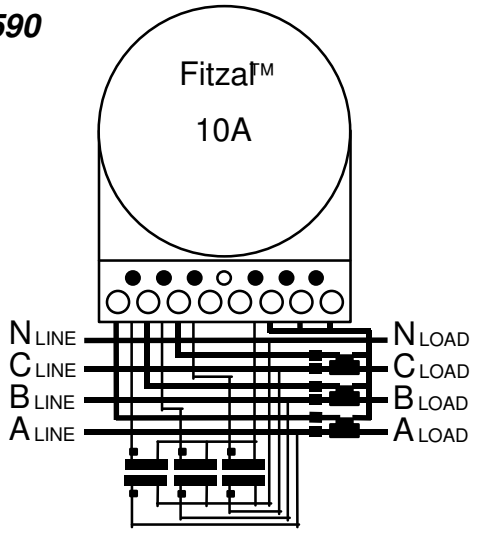

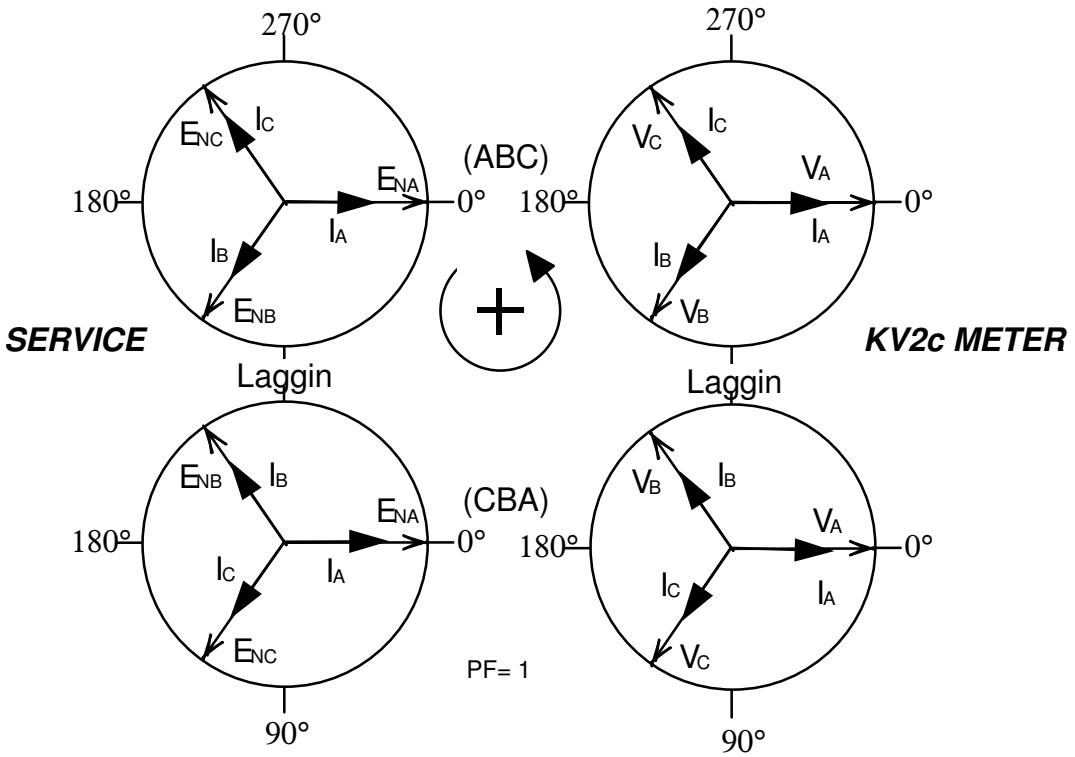

Actual installation procedures, equipment, and connections must to applicable codes and standards

4-wire, 3-Element

MO 9-6

KV2c Site Analysis

Form 13A *(Self-Contained)*

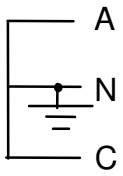

3-Wire Singlephase

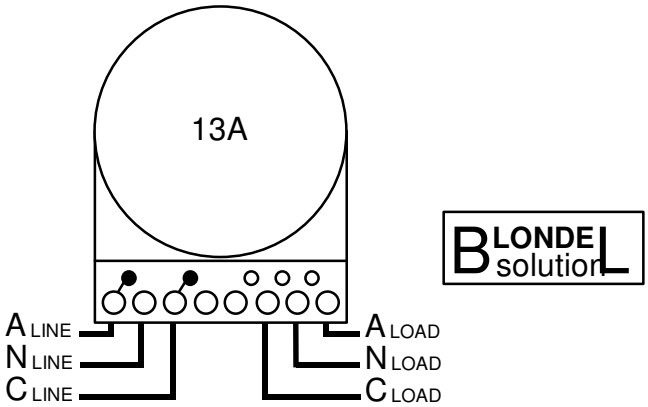

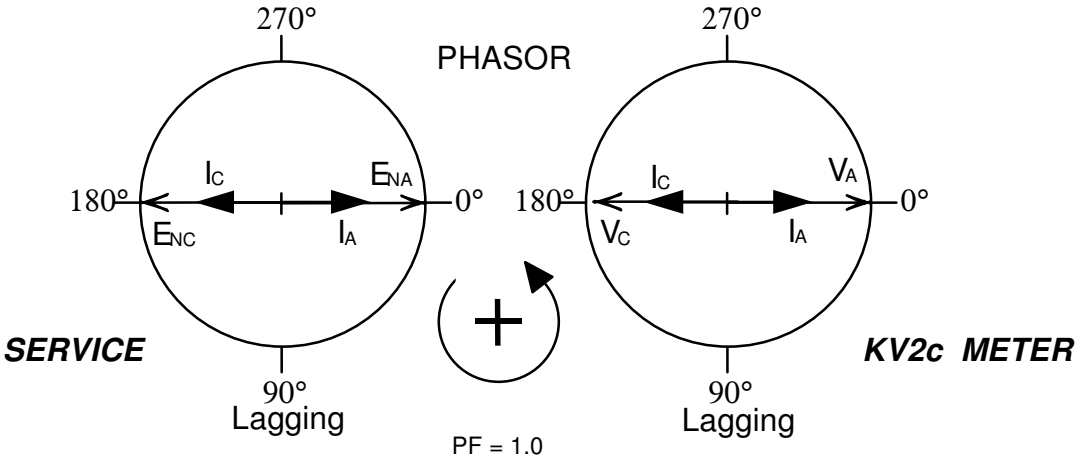

Actual installation procedures, equipment, and connections must to applicable codes and standards

3-wire, 1-phase, 2-element

MO 12-4

KV2c Site Analysis

Form 13A *(Self-Contained)*

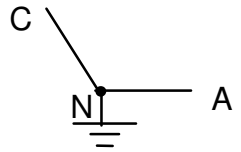

Network

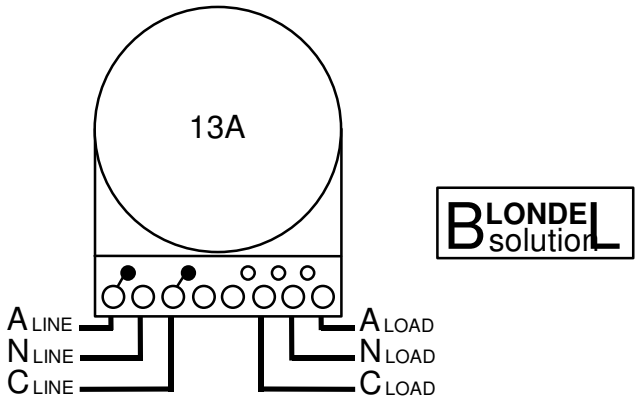

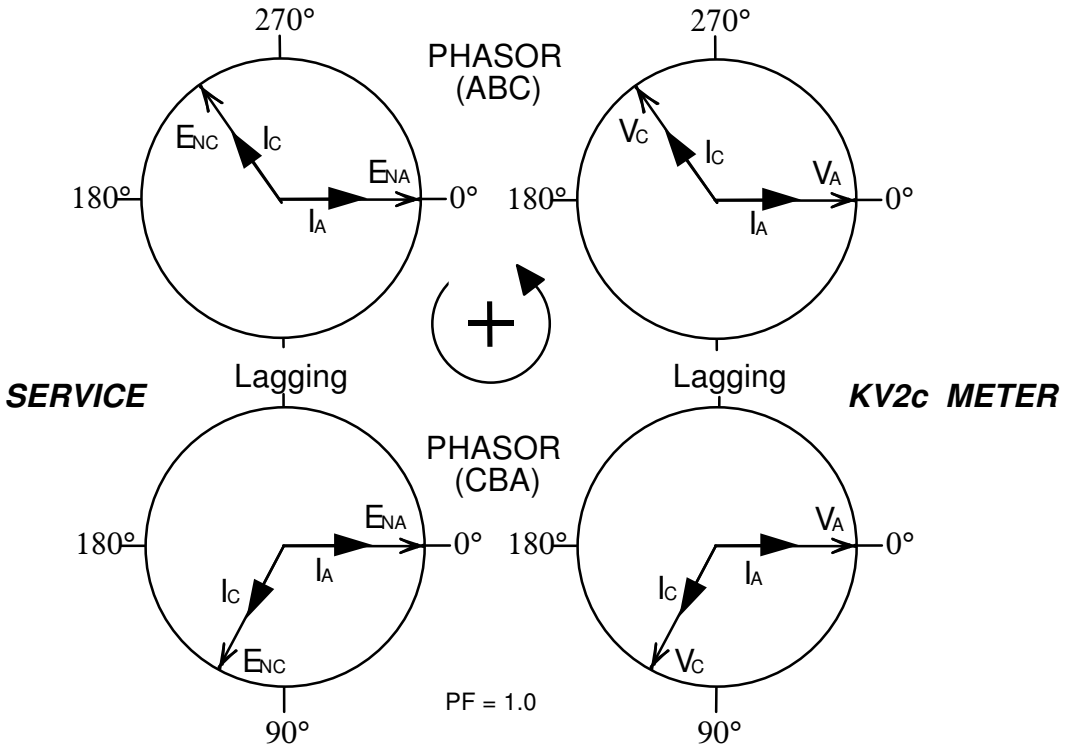

Actual installation procedures, equipment, and connections must to applicable codes and standards

3-wire, Network, 2-element

MO 12-4

KV2c Site Analysis

Form 13A *(Self-Contained)*

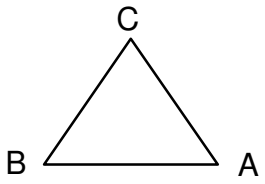

3-Wire, Delta

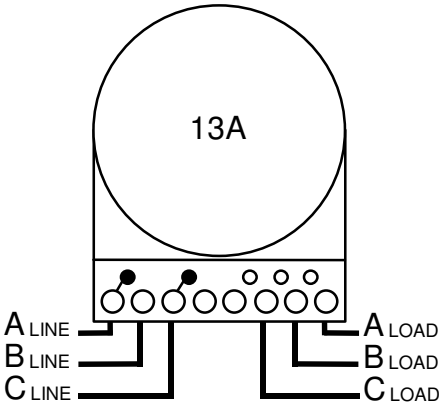

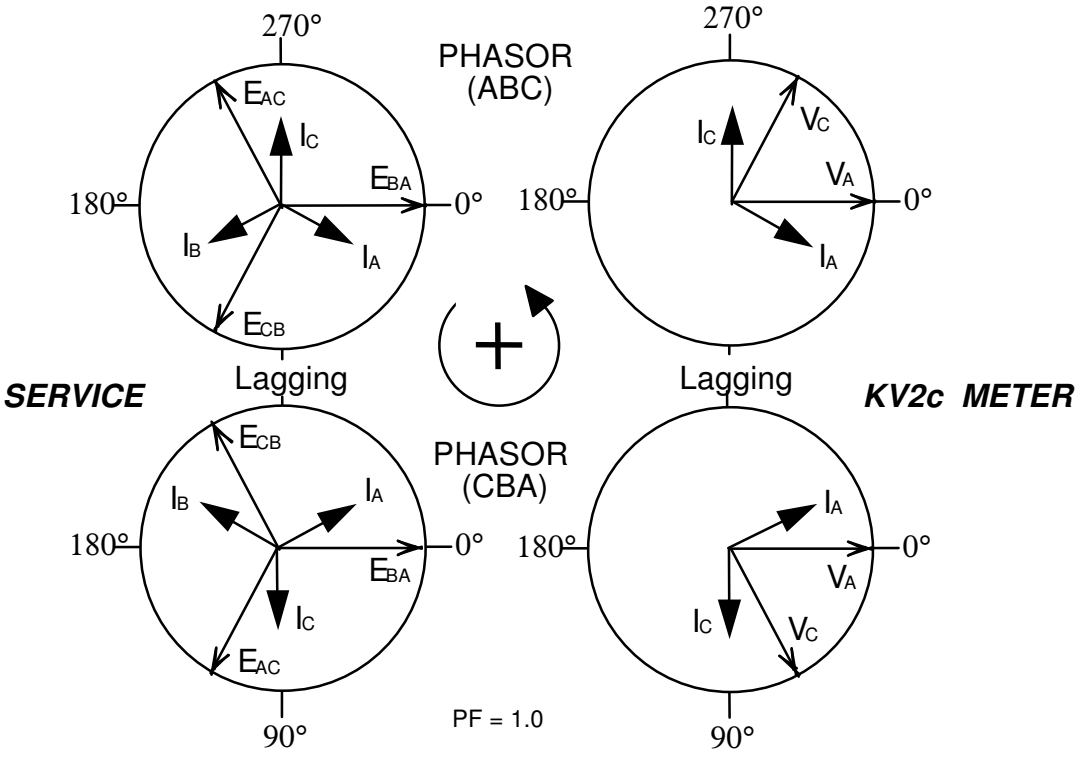

Actual installation procedures, equipment, and connections must to applicable codes and standards

3-wire, 3-phase, 2-element

MO 12-0

KV2c Site Analysis

Form 16A *(Self-Contained)*

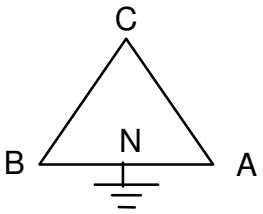

4-Wire, Delta

See instruction book ***GEI-52590***

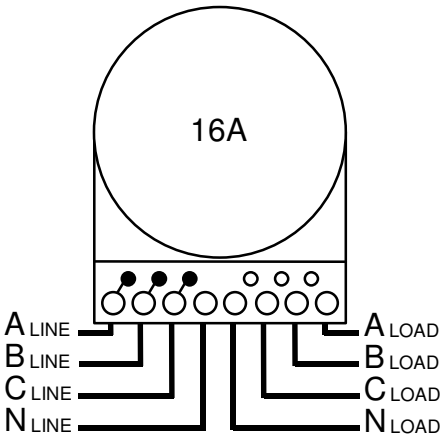

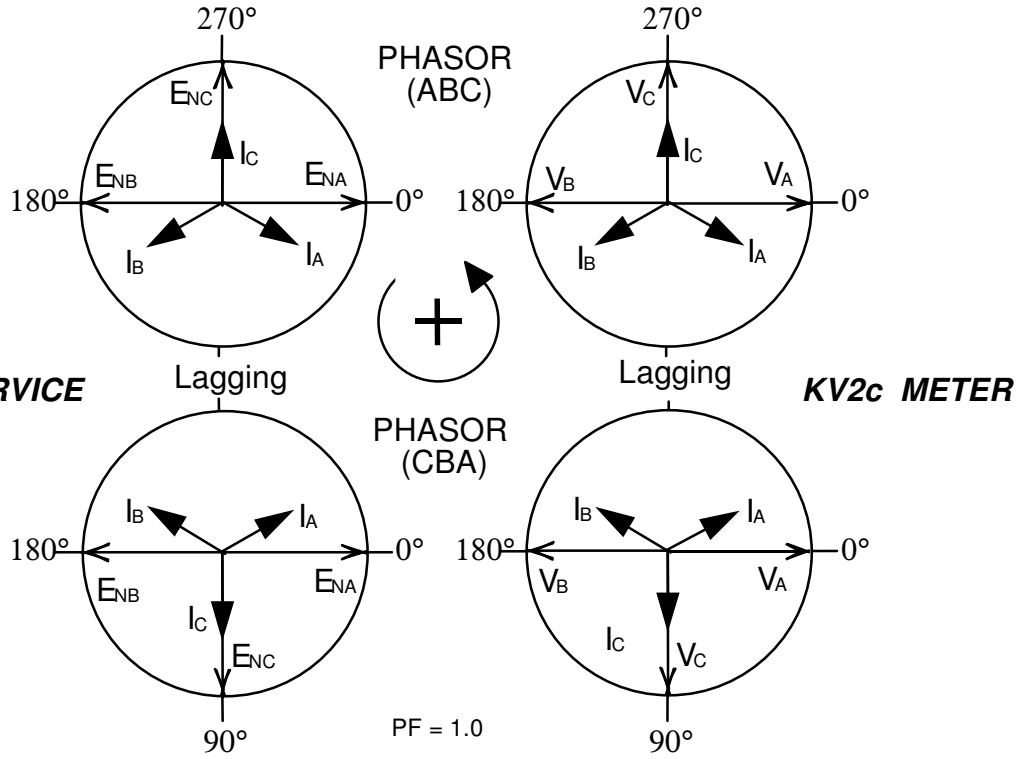

Actual installation procedures, equipment, and connections must to applicable codes and standards

4-wire, 3-Element

MO 16-6

KV2c Site Analysis

Form 16A *(Self-Contained)*

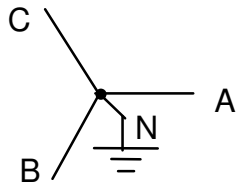

4-Wire, Wye

See Fitzall™ instruction book ***GEI-52590***.

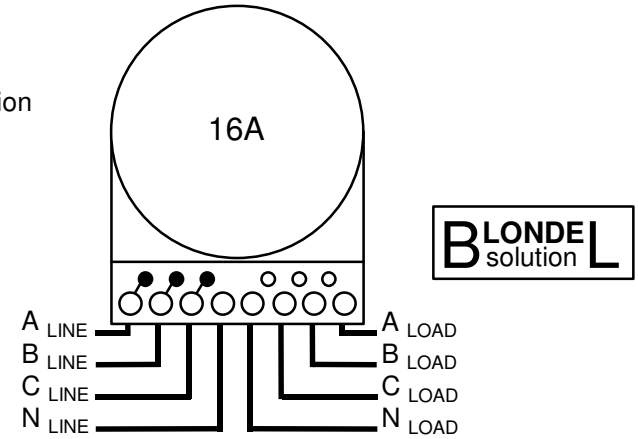

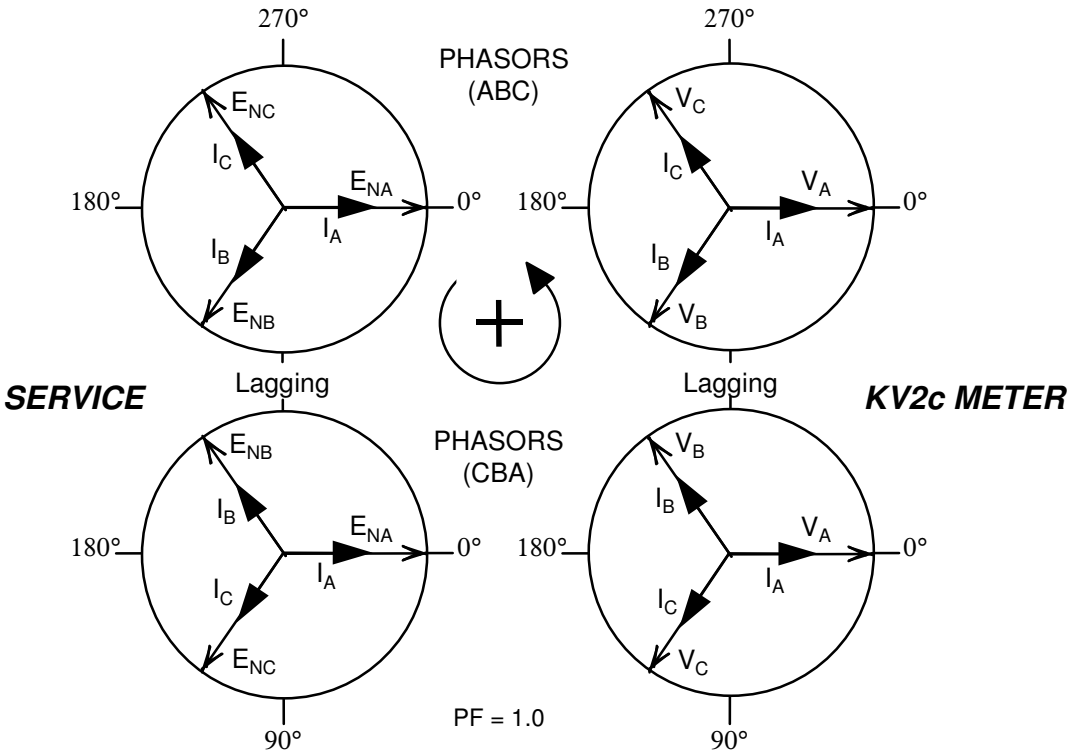

Actual installation procedures, materials, equipment, and connections must conform to applicable codes and standards

4-wire, 3-Element

MO 16-6

KV2c Site Analysis

Form 36A *(Transformer Rated)*

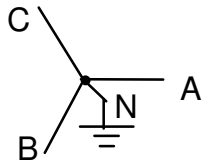

4-Wire, Wye

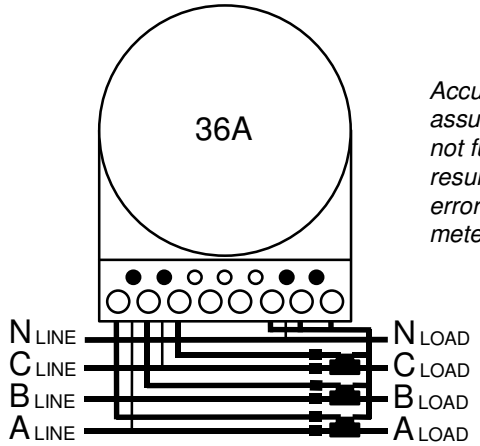

Accuracy is based on assumptions which, if not fulfilled, may result in systematic errors unrelated to meter calibration.

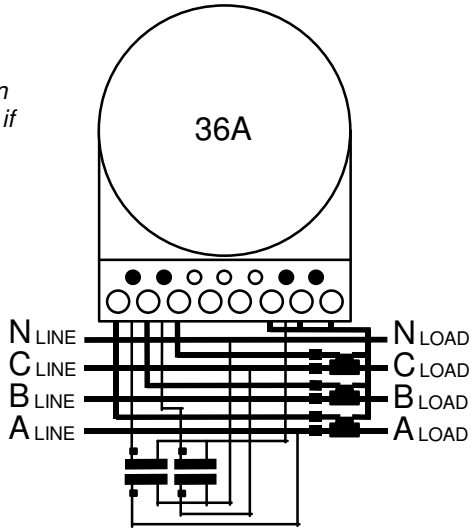

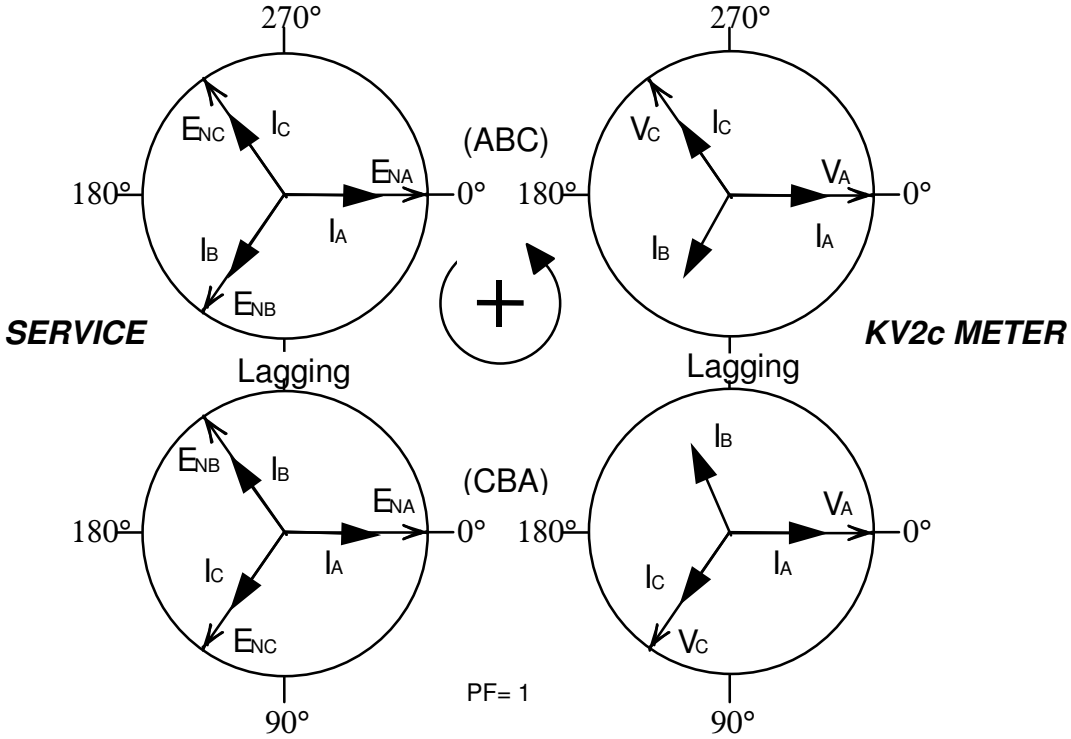

Actual installation procedures, equipment, and connections must to applicable codes and standards

4-wire, wye, 2-1/2-element

MO 36-2

KV2c Site Analysis

Form 45A *(Transformer Rated)*

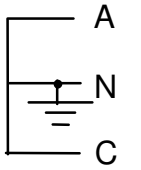

3-Wire
Singlephase

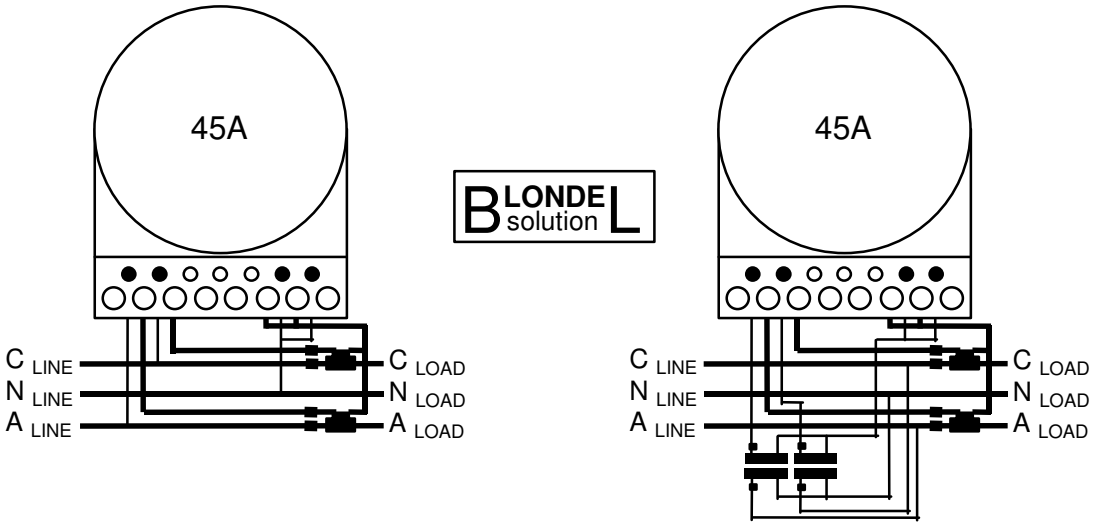

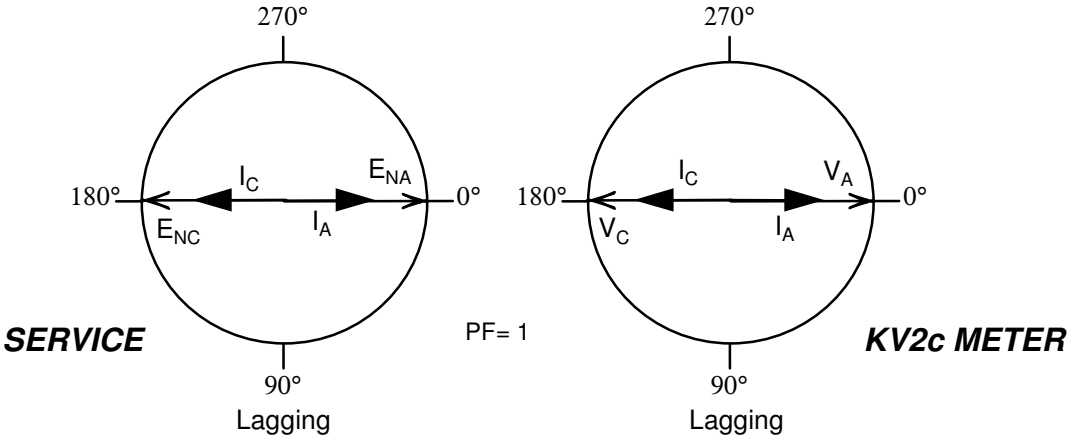

Actual installation procedures, materials, equipment, and connections must conform to applicable codes and standards

3-wire, 1-phase, 2-element

MO 45-3

KV2c Site Analysis

Form 45A *(Transformer Rated)*

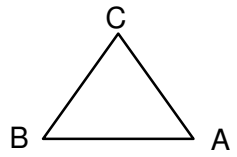

3-Wire, Delta

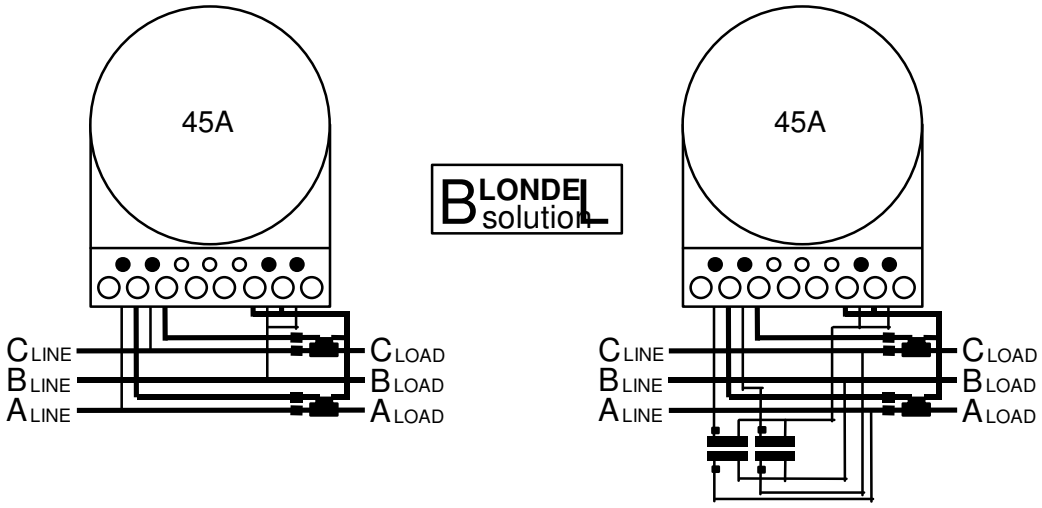

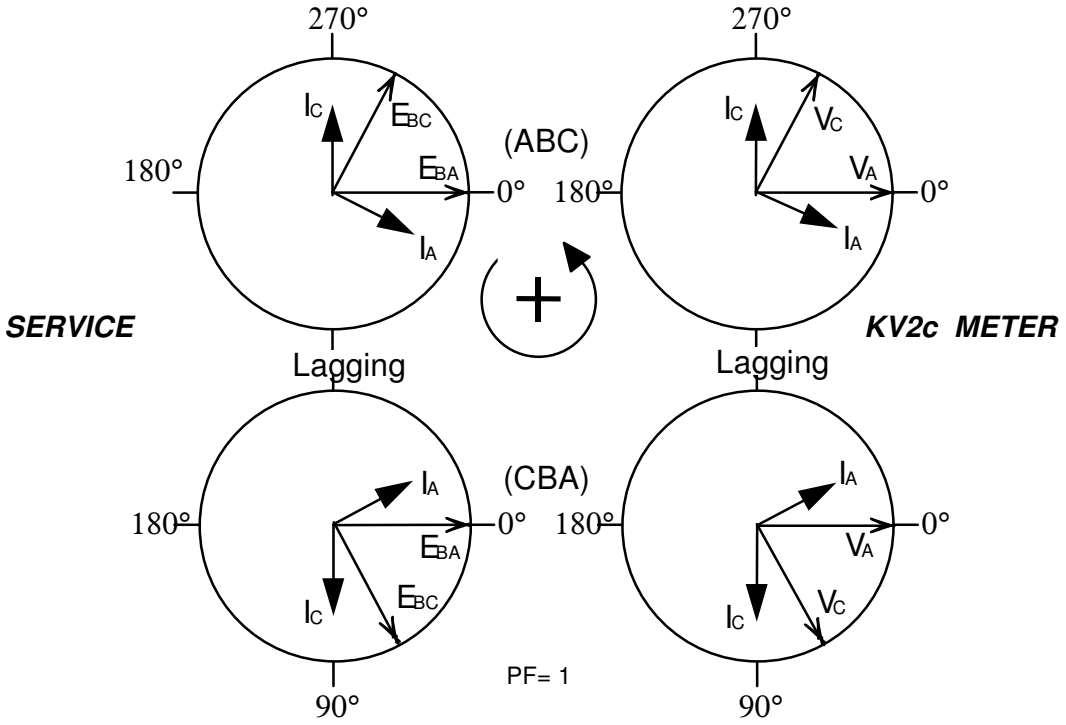

Actual installation procedures, equipment, and connections must to applicable codes and standards

3-wire, 3-phase, 2-element

MO 45-0

KV2c Site Analysis

Form 45A *(Transformer Rated)*

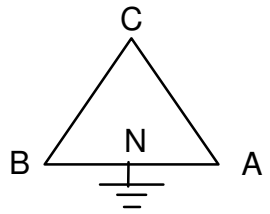

4-Wire, Delta

Accuracy is based on assumptions which, if not fulfilled, may result in systematic errors unrelated to meter calibration.

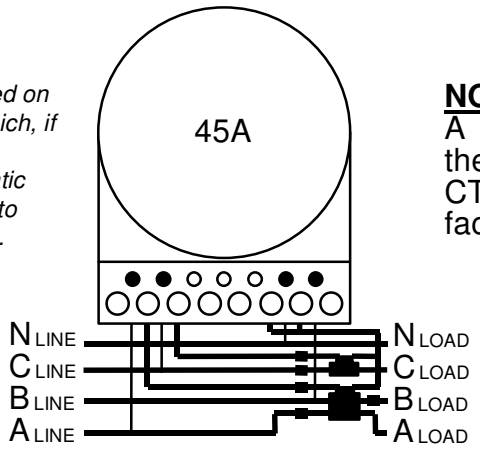

NOTE A window type CT in A & B must have twice the the CT in line C. Use the ratio CT in line C as the factor in determining the multiplier.

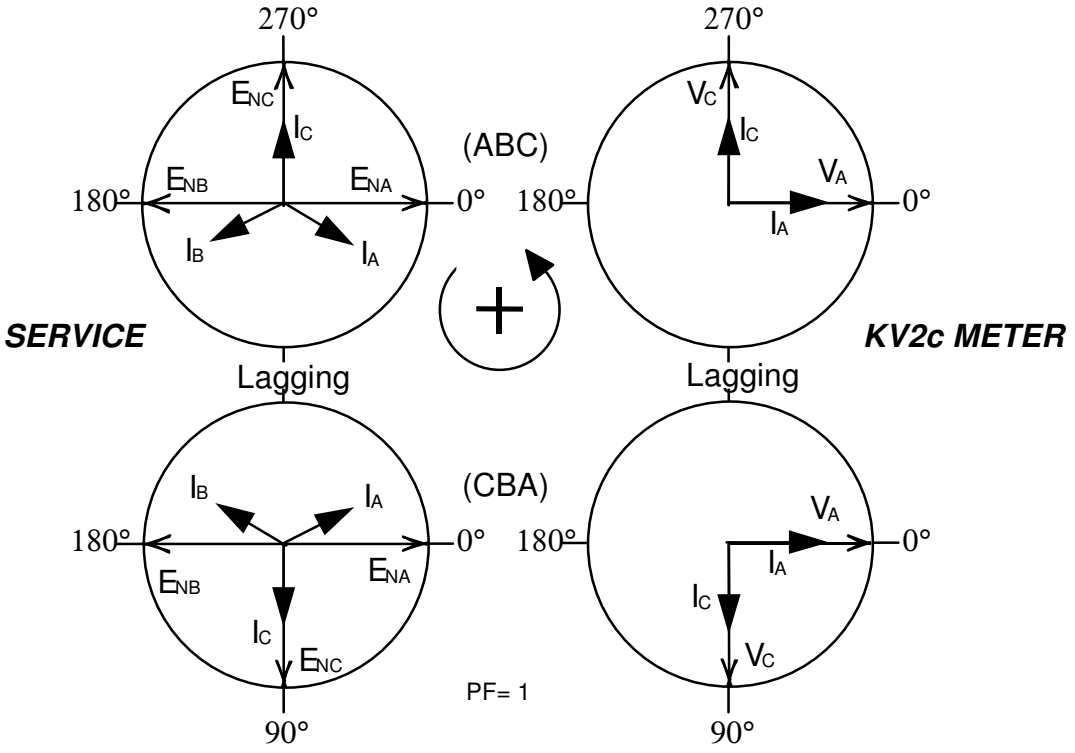

Actual installation procedures, equipment, and connections must to applicable codes and standards

4-wire, delta, 2-element

MO 45-3

KV2c Site Analysis

Form 45A *(Transformer Rated)*

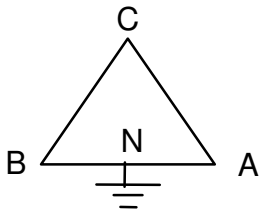

4-Wire, Delta

Accuracy is based on assumptions which, if not fulfilled, may result in systematic errors unrelated to meter calibration.

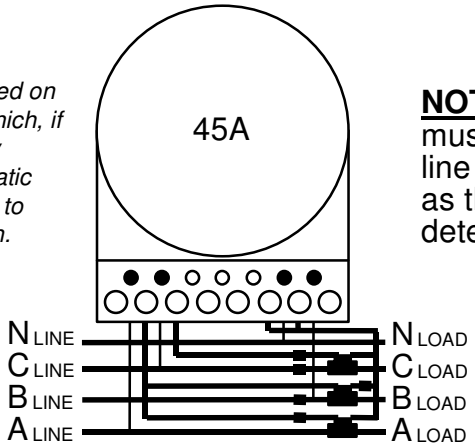

NOTE The CTs in lines A & must be twice the ratio of the CT line C. Use the ratio of CT in line as the transformer factor determining the multiplier.

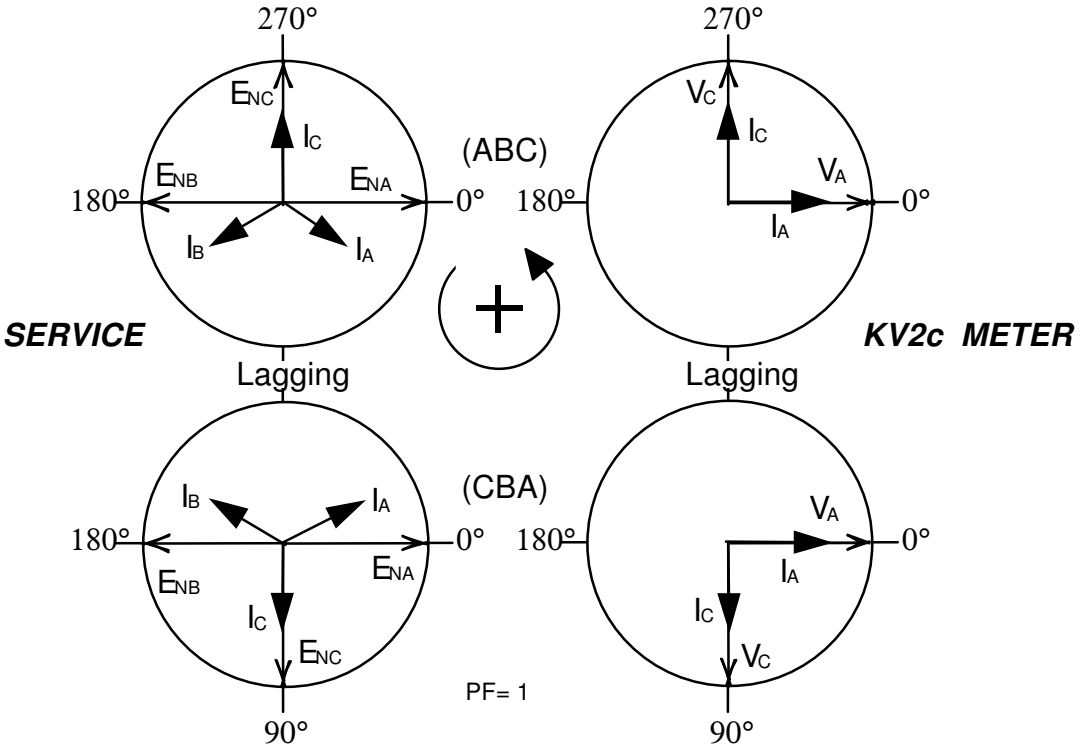

Actual installation procedures, equipment, and connections must to applicable codes and standards

4-wire, delta, 2-element

MO 45-3

KV2c Site Analysis

Form 45A *(Transformer Rated)*

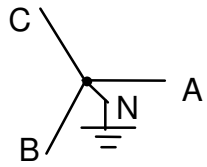

4-Wire, Wye

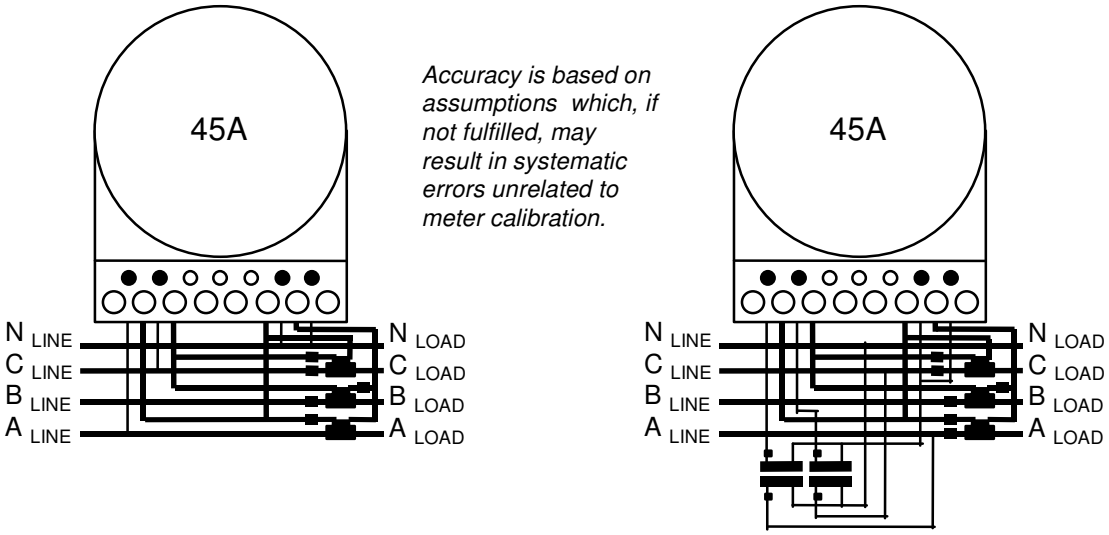

Accuracy is based on assumptions which, if not fulfilled, may result in systematic errors unrelated to meter calibration.

NOTE: For 3-wire CTs rated x&x:5, use 2x:5 when determining the TF.

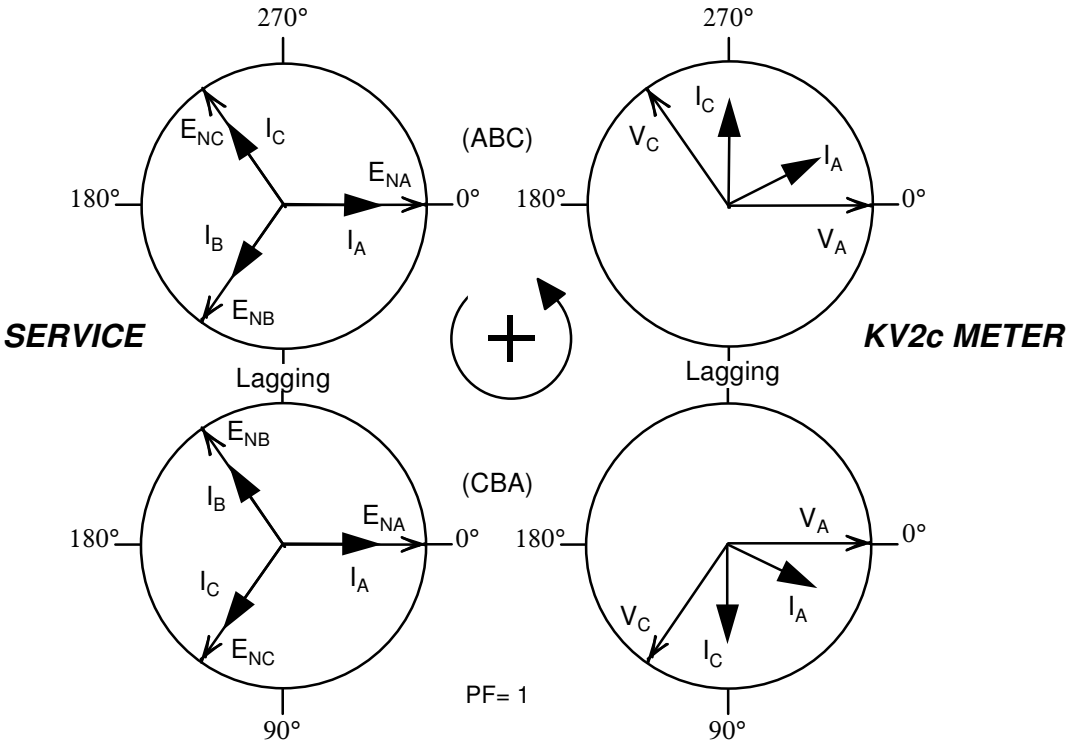

Actual installation procedures, materials, equipment, and connections must conform to applicable codes and standards

4-wire, wye, 2-element

MO 45-3

KV2c Site Analysis

Form 45A *(Transformer Rated)*

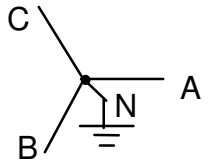

4-Wire, Wye

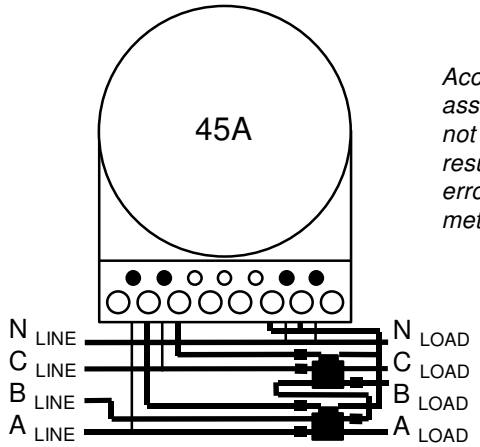

Accuracy is based on assumptions which, if not fulfilled, may result in systematic errors unrelated to meter calibration.

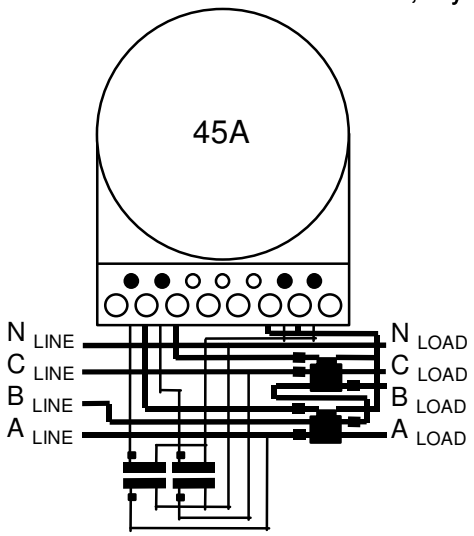

NOTE: For 3-wire CTs rated x&x:5, use 2x:5 when determining the TF.

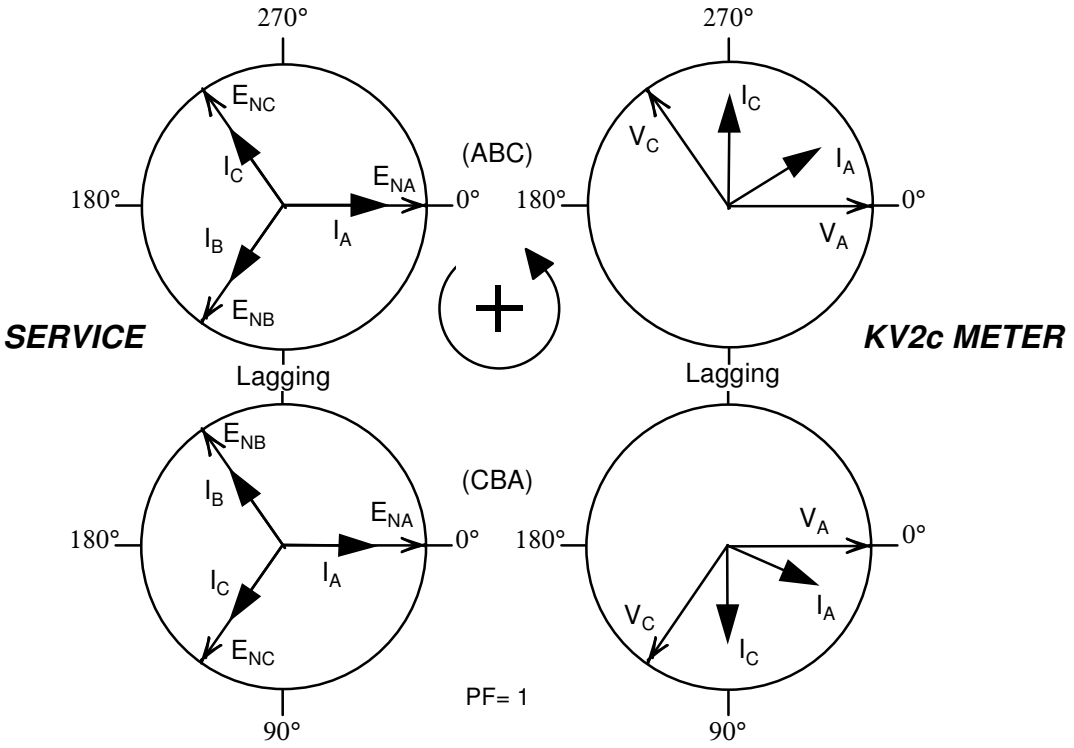

Actual installation procedures, materials, equipment, and connections must conform to applicable codes and standards

4-wire, wye, 2-element

MO 45-3

KV2c Site Analysis

Form 45A *(Transformer Rated)*

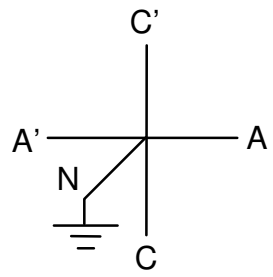

5-Wire, 2-Phase

Accuracy is based on assumptions which, if not fulfilled, may result in systematic errors unrelated to meter calibration.

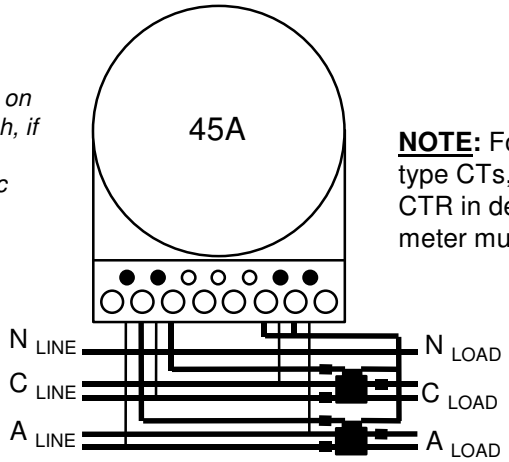

NOTE: For window type CTs, use half the CTR in determining meter multiplier.

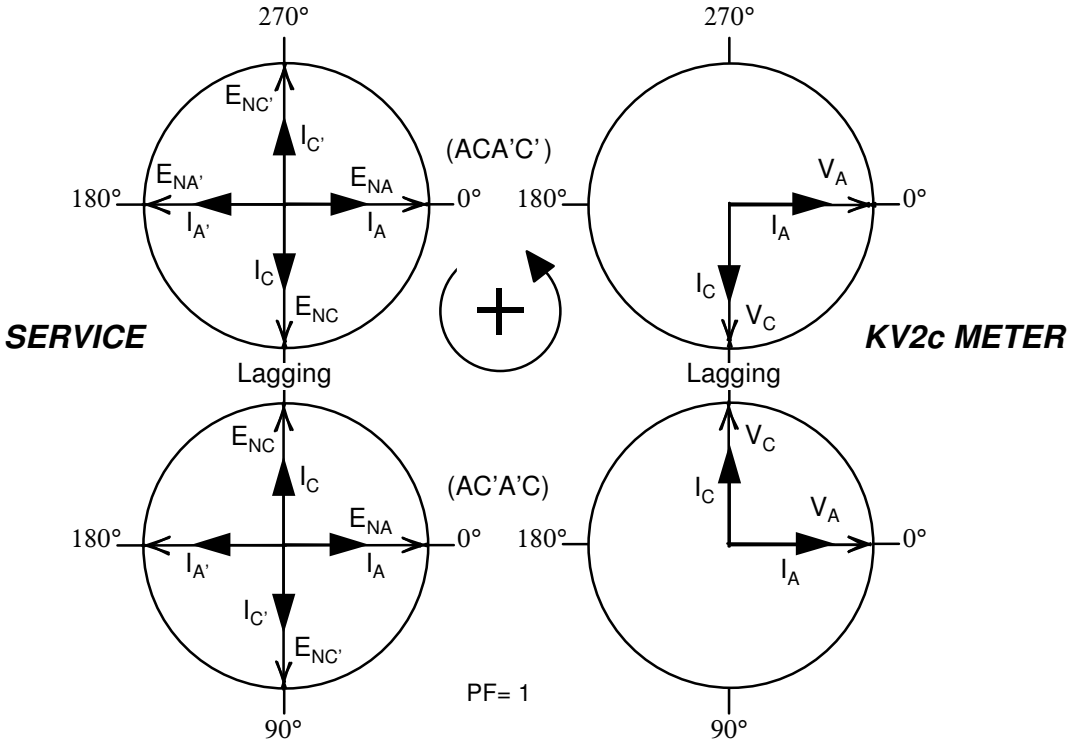

Actual installation procedures, materials, equipment, and connections must conform to applicable codes and standards

5-wire, 2-phase, 2-element

MO 45-3

KV2c Site Analysis

Form 48A *(Transformer Rated)*

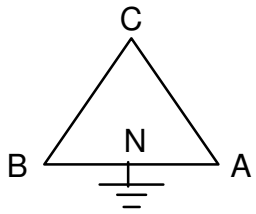

4-Wire, Delta

See Fitzall™ instruction book ***GEI-52590***.

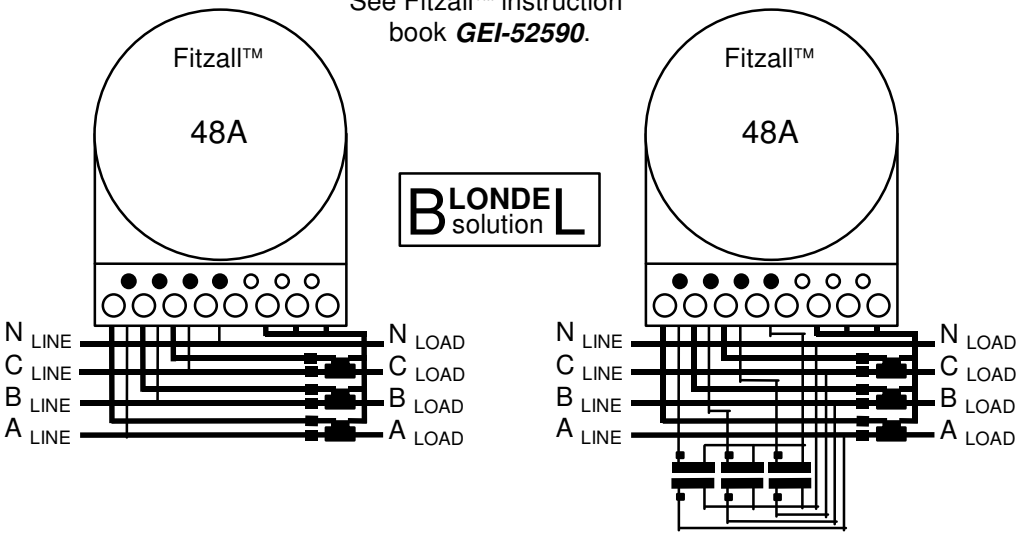

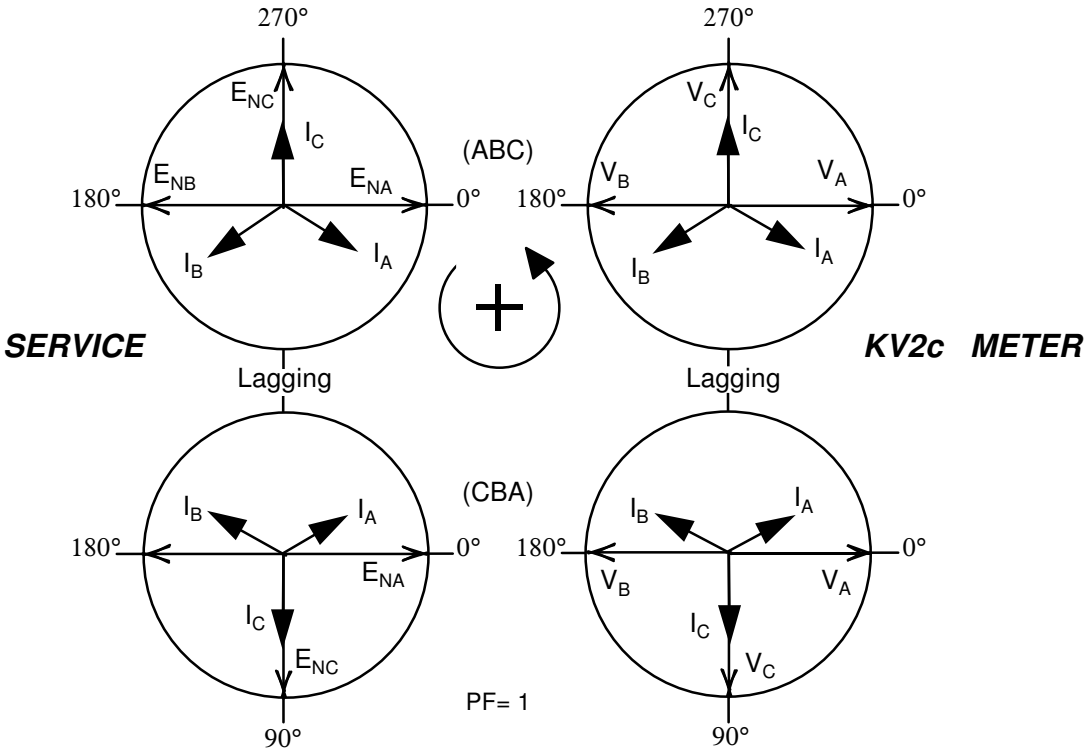

Actual installation procedures, materials, equipment, and connections must conform to applicable codes and standards

4-wire, 3-Element

MO 9-6

KV2c Site Analysis

Form 48A *(Transformer Rated)*

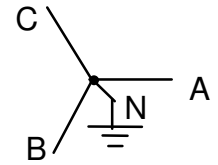

4-Wire, Wye

See Fitzall™ instruction book ***GEI-52590***

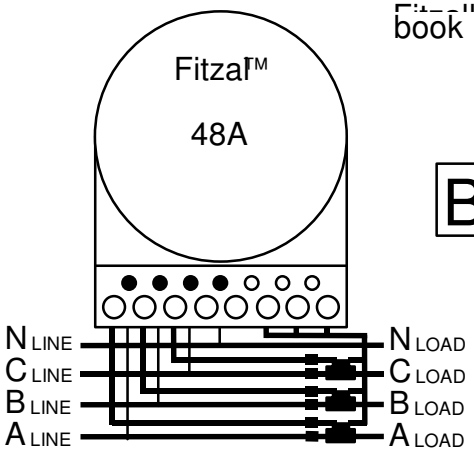

BLONDEL solution

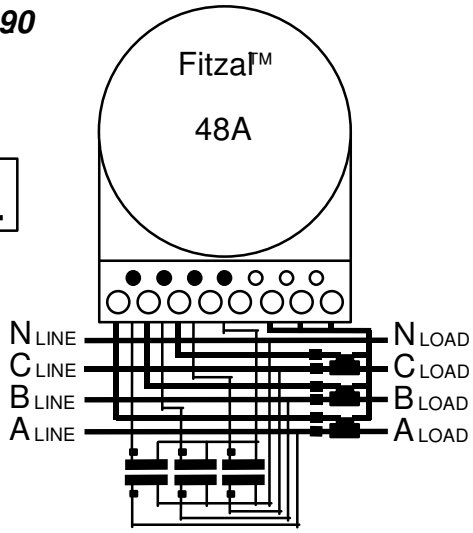

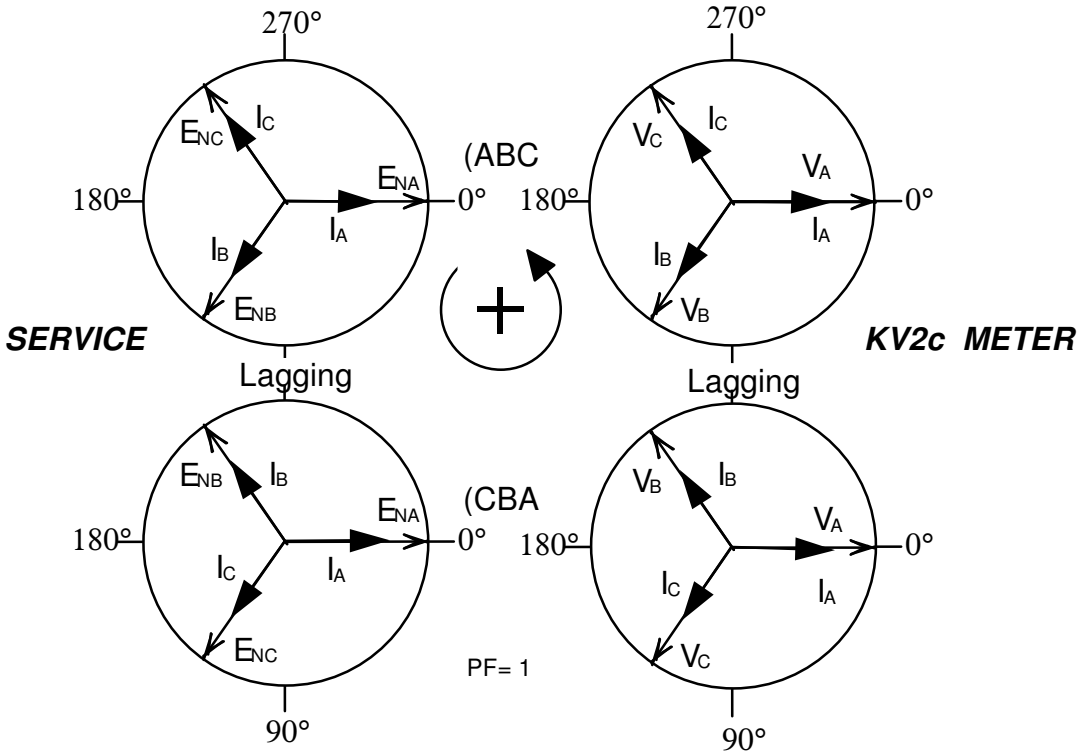

Actual installation procedures, equipment, and connections must to applicable codes and standards

4-wire, 3-Element

MO 9-6

Figure 5-1 Site Genie Worksheet

GE Meter

kV2c Site Genie™ Worksheet

Data File Name: _____._____
Complete Path: _____

Meter #: _____

Site: _____

_____

_____

Service: _____

Service Display: _____

FUNDAMENTAL PHASORS

	A	B	C	
Voltage Angle	0.0			º Lagging
Voltage				Volts
Current Angle				º Lagging
Current				Amperes

Power Factor : _____
Distortion Power Factor: _____
Diagnostic Counts

D1	
D2	
D3	
D4	
D5T	
D5A	
D5B	
D5C	
D6	
D7	
D8	

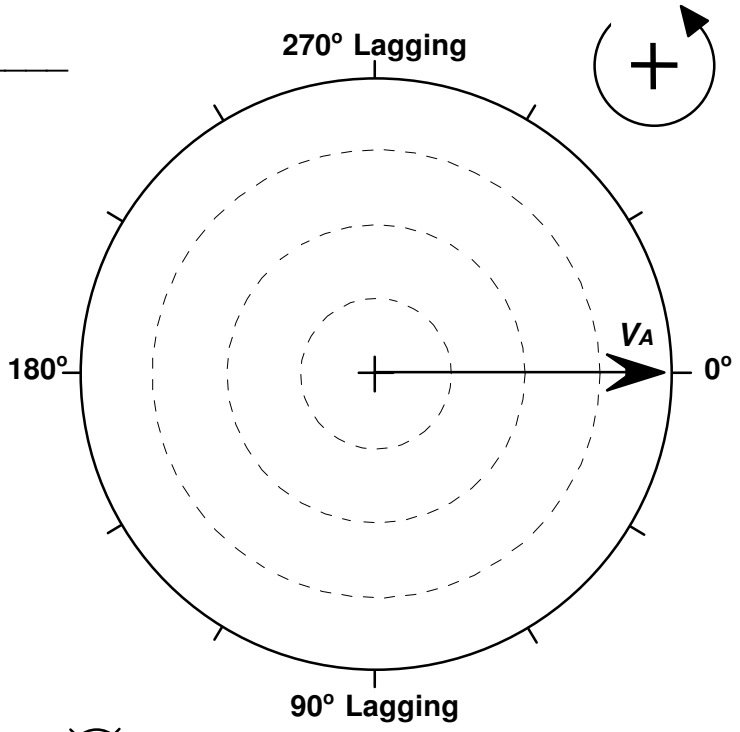

Meter Display Status

Fill-in Lit Arrows

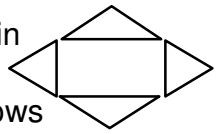

A Blinking

B Off - Blinking

C Off - Blinking

Ca _____

_____

Er _____

6. Diagrams

Figure 0-1 ANSI Meter Diagrams

ANSI C12.10 Internal Connections

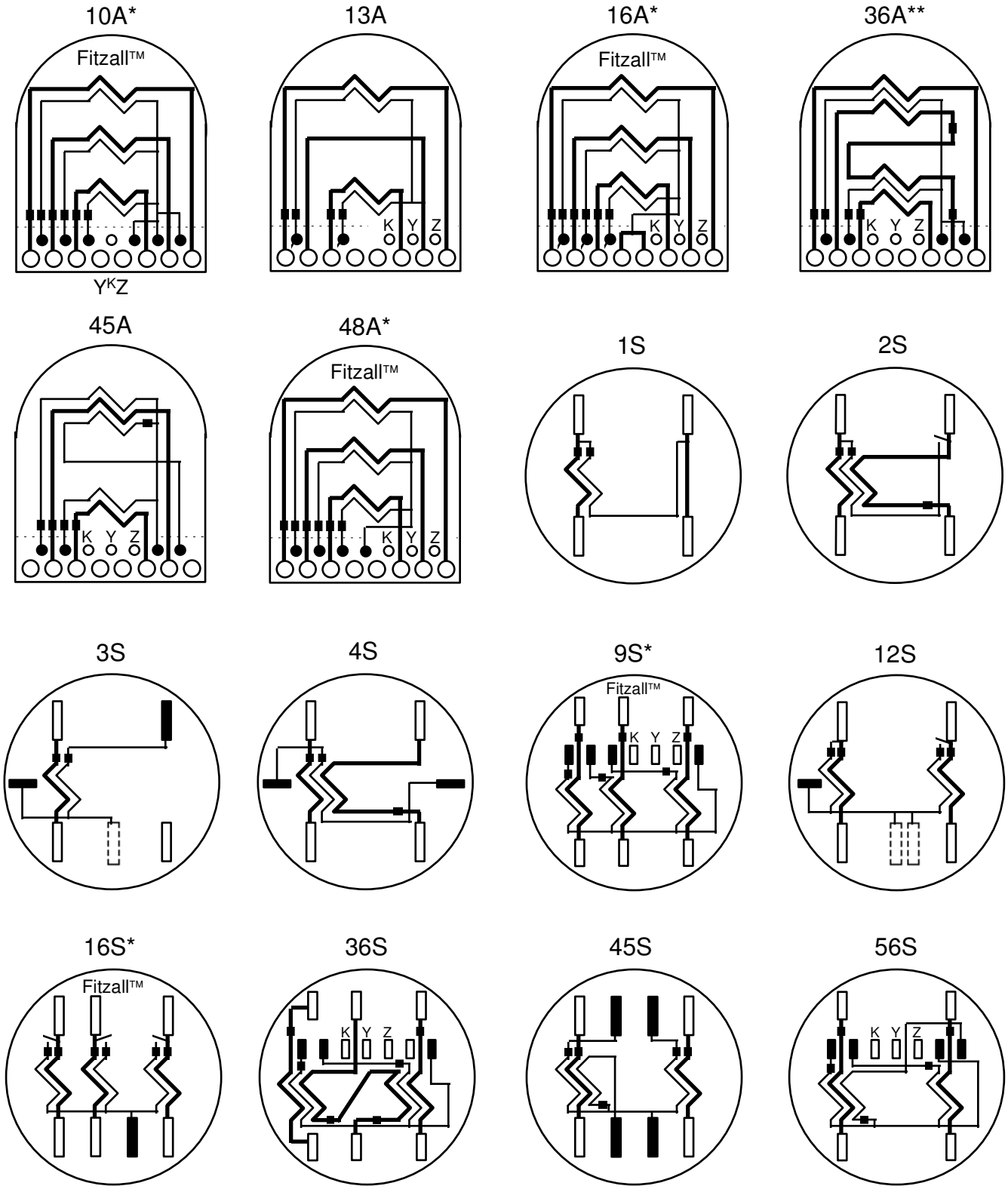

* See Fitzall™ instruction book ***GEI-52590***.

** Terminal for terminal, the 36A and 46A are identical.

7.

Figure 7-1 Outline Drawings

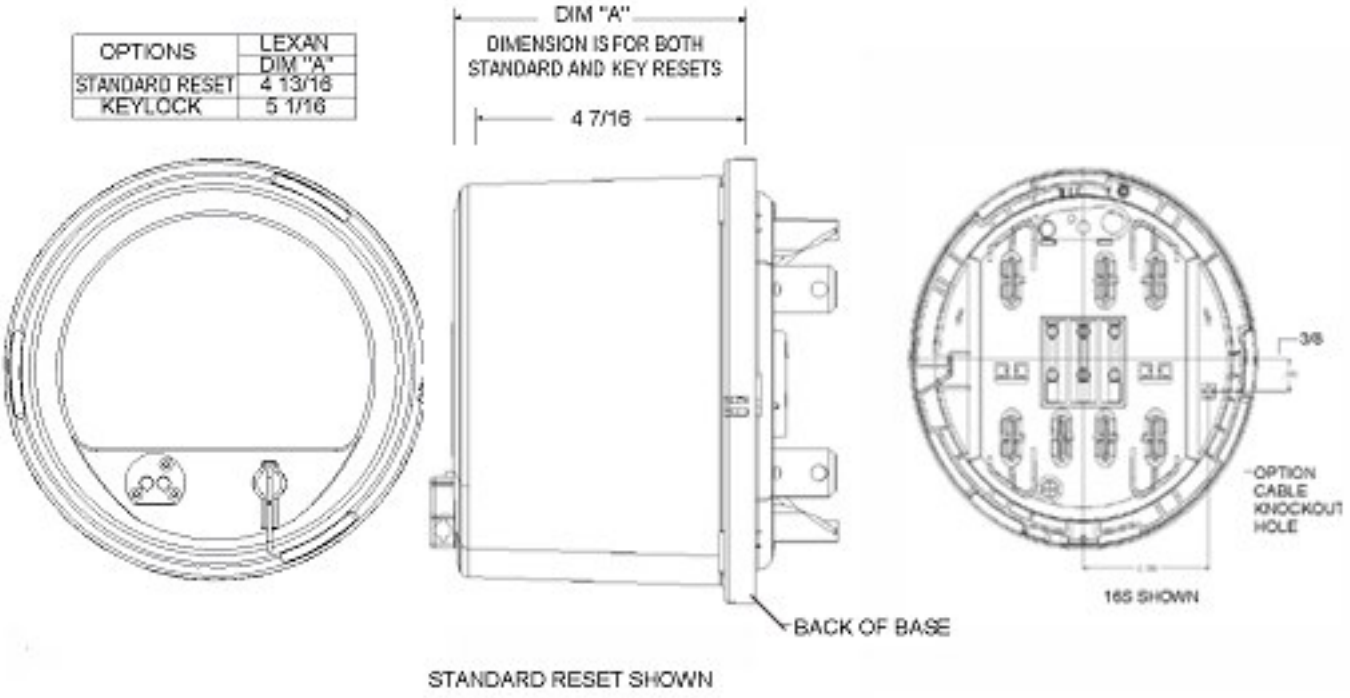

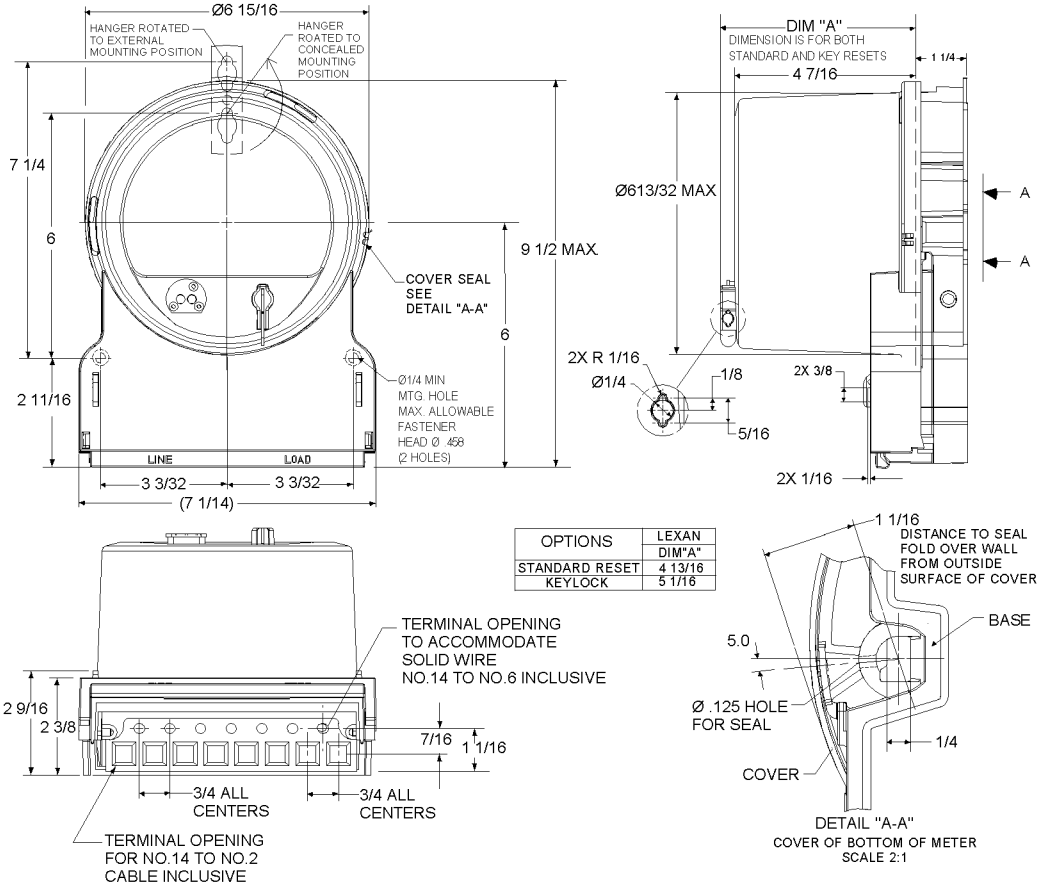

8. Index

—A—

A-base, 2-17, 4-7
accuracy, 3-9, 3-11
Accuracy, 2-2
active power, 2-31
actual time, 2-33
alert, 1-7
alternate display, 1-3, 2-14, 2-16, 2-20
Alternate Display Mode, 2-13
alternate display switch, 1-3
annunciator, 2-14
annunciators, 3-3
ANSI, 1-1, 1-2, 1-3, 1-4
ANSI C12.10, 2-1, 2-2
ANSI C12.18, 1-1, 1-3
ANSI C12.19, 1-1
Apparent power, 1-7
apparent power measurements, 1-2

—B—

base, 1-3
Base Barrier, 4-14
battery, 1-3, 1-11, 3-12, ***3-14***, 3-15, 3-17, 4-6
safety and disposal, 3-11
Battery, 1-11, 3-11, 3-12, 3-15, 3-17, 4-6
Battery port, 1-5
bezel, 2-20, 3-3, 3-12, 4-7, 4-8, 4-11, 4-19
billing data, 3-7
Blondel, 1-4, 2-19

—C—

cable, 4-11, 4-12, 4-15
calibration, 3-2, 3-8, 3-9, 3-10, 3-11, 4-7
calibration LED, 3-2
calibration pulses, 3-2
catch-up tasks, 3-5
Caution Code Display, 3-17
cautions, 3-13, 3-17
Cautions, 3-13, 3-17
Changing K_t, 3-10
cleaning, 3-13
Cleaning, 3-13
communications, 3-2
communications options, 1-5
connector, 3-18, 4-7, 4-12, 4-15
cover, 1-3, 3-3, 3-12, 4-7, 4-17, 4-19

—D—

D C currents, 1-2
Data Acquisition, 1-10
Data Acquisition Platform, 1-10
default test mode, 3-4
display items, 3-4
default test mode values, 3-4
delay, 3-5
Demand decimal position, 3-4
demand interval, 3-4
Demand interval length, 3-4
demand meter, 1-11, 3-5, 4-6
Demand subinterval length, 3-4
demand subintervals, 3-4
diagnostic, 2-12, 2-13, 2-17, 2-19, 2-20, 2-25, 2-26, 2-27, 2-28, 2-33
Diagnostic Displays, 2-25
disassembly, ***4-1***, 4-11
Disassembly, 4-7
disk analog, 3-2, 3-8
Disk analog, 3-3, 3-7
Disk Analog Testing, 3-8
Displacement power factor, 1-7
Display, 2-6
display format, 3-4
display items, 2-12, 3-4, 3-7
Display Modes, 2-11
display switch, 2-11, 2-13, 3-4
distortion, 1-2, 2-27, 2-28, 2-31
Distortion, 1-7
DSP, 1-10

—E—

electrical connections, 3-9
electronics module, 1-3
Electronics Module, 4-7
end-of-interval, 3-7
Energy Calculations, 3-4
Energy display format, 3-4
energy flow, 2-15, 2-27, 3-3, 3-18
Energy flow annunciators, **3-3**
Er 000 002, ***3-14***, 3-15
Error Code Display, 3-15
event recorder, 2-33

—F—

failures, 3-13
Field Testing, 3-7
Fitzall, 1-4
flow indicator, 3-7
freeze error codes, 3-13
Frozen Display, 2-13
fundamental, 1-2, 2-14, 2-33

—G—

General Information, 1-2

—H—

Hardware Options, 1-5
harmonics, 1-2, 2-31, 2-33
High Imputed Neutral Current, 2-32
high power factors, 3-11
Hitachi processor, 1-10

—I—

I/O cable, 4-11
I/O Cable, **4-12**
I/O-1 board, 4-10
Input / Output circuit boards, 1-5
interval demand, 3-5

—K—

K_t value, 3-8, 3-9, 3-10
kV Meter, 1-2
kVAh, 3-4
kVArh, 3-4
kWh, 3-4
KYZ, 4-12, 4-15

—L—

labels, 2-21
Labels, 2-3
LCD, *2-13*, 2-14, 3-2
LED, 3-2, 3-10, 3-11
light-emitting diode, 3-2
Line frequency, 1-7
liquid crystal display, 1-3, 2-14, 3-2, 3-13, 4-11
Load Profile, 1-2, 1-11
load profiling, 3-5
LP recording, 3-4

—M—

Main Menu, 4-6
Maintenance, 1-8
Maximum demand, 3-7
meter cover, 3-12, 4-7
meter loading equipment, 3-9
meter mounting equipment, 3-9
Meter Shop Equipment, 3-9
meter test constant, 3-9
metering constants, 3-4
MeterMate, 1-4
MeterMate™, 1-9
microcomputer, 1-10

Microcomputer, 1-10
midnight boundary, 3-5

—N—

nameplate, 1-3, 2-1, 3-8, 3-9, 3-10, 4-6, 4-11
Nameplate, 2-1
neutral current, 2-33
Neutral current, 1-7
Nonvolatile Memory, 1-11

—O—

option board, 3-20, 4-8, 4-11
Option boards, 1-11
OPTOCOM, 3-2
OPTOCOM, 4-6
Outage counter, 1-7
output cable, 4-12, 4-15

—P—

partial subinterval, 3-5
phantom load, 3-7, 3-8
phase angles, 1-7
Phase currents, 1-7
Phase sequence, 1-7
phase voltage, 2-23, 2-27, 3-3
Phase voltage, **3-3**
Phase voltages, 1-7
Phasor, 2-20
Physical Description, 1-3
POLYPHASE TESTING, ***4-19***
portable standard, 3-7, 3-8
Power, 1-7
Power – reactive, 1-7
power factor, 1-2, 2-27, 3-5, 3-11, 3-17
Power factor, 1-7, 2-31
power outage, 3-5
power quality, 2-31
power supply, 3-9
Power Supply, 1-11
Previous interval kW, 3-5
pulse, 3-2, 3-9, 3-10, 3-11

—Q—

Quadergy, 2-15
quadrant, 3-3

—R—

reactive power, 2-31
Reassembly, 4-19
Repair, 3-13
reprogram, 3-14
reset, 1-3, 2-12, 2-13, 2-27, 3-5, 3-7
Reset, 2-27, 2-28, 2-29, 2-30, 2-31, 2-32, 3-5, 3-7, 3-8
Reset command, 2-27, 2-28, 2-29, 2-30, 2-31, 2-32
Returning a Meter, 3-13
Revenue Guard, 1-1, 1-6, 4-17, 4-18

—S—

S-base, 2-17, 4-7
seal, 4-7
Sensing Devices, 1-10
Service Display, 2-17
settling time, 3-11
Site GEnie, 1-7
Site Genie Display Mode, 2-13
SMARTCOUPLER device, 4-6
soft switches, 1-8
Softswitches, 4-1
Storage, 3-13
subinterval countdown timer, 3-4
Switch holder, 4-6

—T—

television interference, ii
Test, 2-2, 2-11, 2-12, 2-13, 2-16, **3-3**, 3-4, 3-5, 3-7, 3-9, 3-10, 3-11, 3-20, 4-18
test accumulators, 2-13, 3-4
test annunciator, 3-4
test demand
  time remaining in interval, 3-5
  time remaining in subinterval, 3-5
test kW demand, 3-5
test link(s), 3-9
test mode, 2-14, 2-26, 3-3, 3-4, 3-5, 3-7
Test mode, 3-5
  maximums for kQ, 3-5
  maximums for kVAr, 3-5
  maximums per kVA, 3-5
Test Mode, 2-16, 3-3, 3-4, 3-5, 3-7
test mode switch, 3-3
test mode values, 3-4
Test Procedure, 3-10, 3-11
test pulses, 3-10
test switch, 1-3, 3-3, 3-4, 3-5
test time, 3-10, 3-11
testing, 2-26, 3-3, 3-8, 3-9, 3-10, 3-11
Time Keeping Battery, 1-11, 4-6
Time remaining in subinterval, 3-5
Timebase, 1-5
TOU, 2-15
TOU meter, 3-5
Triplen currents, 2-33
triplens, 2-33
Troubleshooting, 3-13

—U—

unprogrammed, 3-4, 3-17

—V—

VAh, 3-4
values, 1-10, 2-26, 3-4, 3-10, 3-17
VArh, 3-4
VArh test times, 3-11
VArhour, 3-2
VArhours, 3-2, 3-11
Voltage ratings, 1-4

—W—

Watthour, 3-2
Watthour constant, 3-9
Watthours, 2-15, 2-17, 3-2, 3-3, 3-8, 3-9, 3-11
Wh, 3-4

GE Energy introduces an enhanced line of meters …

The Encompass™ Electronic Meter Family

imagination at work

One Family of Meters for Revenue, Monitoring and Power Quality.

GE Energy's Encompass family of meters is designed to meet your metering needs in a rapidly changing world where deregulation blurs the lines between Utility, Industrial, Commercial and Substation metering. In a world where meters must now answer new and vital questions for your business, Encompass meters move beyond revenue metering to real time instrumentation, true power quality monitoring and real cost of service measurements. Encompass meters provide you:

- Revenue Accuracy (with DC Detection capability)
- Installation Verification and Tamper Detection Tools
- Coincident Demand Measures
- Power Quality Monitoring and Analysis
- AMR System Integration Options
- 20 Channel Recording
- Totalization Options (with 4 external inputs)
- 4-Quadrant Industrial or Substation Measures
- Per Phase AC Instrumentation (amps, volts, and frequency)

There are three models within the Encompass Electronic Meter Family:

- **kV2c model** – offers the functionality of GE Energy's feature-rich kV2 meter, plus several enhancements.
- **kV2n model** – designed specifically for those seeking an extremely cost effective meter for network energy rate applications.
- **kV2c+ model** – offers a robust power supply option for AMR modules requiring higher power requirements, a low voltage service option (operates on 57 - 120 volts), support for GE's Revenue Guard option board enabling meter operation from any available phase voltage and additional load profile recording capability.

Whether you're metering the simplest energy rate or collecting critical quality of service and load analysis information (on a polyphase or a singlephase circuit) there's an Encompass meter configuration to meet your needs.

kV2c and kV2c+ Models

Functional Upgradability

The kV2c and kV2c+ models offer easy and powerful functional upgrades with a unique combination of option boards and "softswitches". The kV2c and the kV2c+ start as bi-directional, coincident demand meters with five demand measures, real-time pricing, and real time data monitoring. GE Energy also offers an energy-only version of the kV2c and kV2c+ for customers who do not require demand. On both kV2c and kV2c+ meters, additional functionality is available as shown below:

Softswitches add:

- Time of Use
- Transformer and Line Loss Compensation
- Power Factor, kvar and kVA Measures
- Call In During Outage Reporting
- Recording (4-Channel, 64 kB)
- Security and Power Quality Event Log
- Expanded Recording (20-Channel, 192 kB)
- Advanced Power Quality Measures
- Per Phase Measurements
- Fast Voltage Monitor and Log (1 cycle)
- By Quadrant Measurements
- Harmonic Analysis/Waveform Capture
- Instrument Transformer Correction
- Totalization

Option Boards add:

- Pulse Outputs
- Telephone Modem
- Load Control
- RS-232/485 Communications
- Real Time Pricing Input
- ModBus Communications
- External Inputs

The kV2c+ model is available for low voltage applications (57 – 120V) and is equipped with a more robust power supply to accommodate AMR modules. Additional functionality is available on the kV2c+ as follows:

Additional Softswitches add:

- Additional Recording (20-Channel, 384 kB)
- Revenue Guard Plus

Additional Option Board adds:

- 3 Phase Power Supply (Revenue Guard)

Real Time Instrumentation

Using the optical port or one of the remote communications options on the kV2c or kV2c+, you can watch what is happening at the metering site in real-time. MeterMate 5.00 graphically displays changes in voltage, current, frequency, THD, TDD and the harmonic components of current and voltage as they happen.

Power Quality Compliance Monitoring

The kV2c and the kV2c+ meters have the advanced power quality tools to measure the quality of power delivered. Both meters can also be used to measure compliance to Power Quality agreements or gather data to help set Power Quality Requirements. These tools include:

- Programmable sag and swell monitor that logs: voltage sag and swell duration down to one cycle, minimum or maximum voltage, coincident current, and date and time of occurrence.
- Voltage and Current THD per phase, TDD (Total Demand Distortion), Distortion Power Factor, Displacement Power Factor, Distortion kVA, and Distortion kVAh (all recordable).
- Harmonic analysis (MeterMate 5.00 plots odd and even harmonic magnitudes and phase angles).
- Programmable diagnostics for voltage imbalance, distortion, current imbalance, reversed polarity, high neutral current. These events may be logged, set an alert, and initiate a call-in.
- Outage log and call-in during outage reporting.

Advanced Recording Options

The R (4-channel) and X (20-channel; 192 kB memory) softswitches enable recording in any kV2c or kV2c+ meter; additional hardware is not required. The meters will record any of the quantities that it measures including voltage, current, energy, apparent power, reactive power, distortion power, power factor, THD, TDD and DPF. You choose the measurements that you need to record.

The kV2c and kV2c+ also add new recording options. In addition to traditional interval recording, the meters record the maximum, minimum, or last value in a recording interval. With the 20-channel recorder, you can record the minimum, maximum, and average (using V2h and I2h) voltage and current per phase and still have room for kWh delivered and received.

Installation Verification and Tamper Detection Tools

GE Energy's Site Genie™ Monitor provides a simple, automatic way to catch errors, tampering and wiring changes before billing problems occur. Site Genie also provides the phasor information and diagnostics needed to fix the problems it finds.

Inventory Management Opportunities

The wide range voltage supply combined with the Fitzall™ feature enables you to reduce the number of meters you stock while covering all of your applications.

Enhancements over the kV2

New Features

The kV2c and kV2c+ offer several features that customers requested including:

- Calibration pulses can now compensate for transformer losses
- Transformer factor (TF) is a displayable item
- Ability to set a DC immunity alert on Diagnostic 5
- Access to self-read data without having to purchase a recording option
- Ability to calculate up to five thermal demand values

New Configuration

In addition, the product family includes an energy only network meter that's simple, convenient and affordable.

- kV2n meter is optimized for 120/208 volt 3-wire network service.
- Available as a Class 200, 120 volt two element meter in either a form 12S or 25S configuration
- For convenience, the meter comes complete with a simple factory-installed program to collect and display energy accumulation. No programming is required; just install the meter and go.
- kV2n incorporates the popular kV style LCD with 5 large easy-to-read digits displaying energy accumulation
- Includes the familiar disk analog display and separate annunciators to verify both potential circuits are energized
- Single piece LEXAN cover is furnished without demand reset and Optocom hardware to further improve its tamper resistance.

The kV2n is a new configuration developed from proven technology and optimized for network applications.

Additional Features on the kV2c+

The kV2c+ Revenue Guard option board powers the meter even when the A phase voltage is lost; any available L-L or L-N voltage will be used. Revenue Guard Plus softswitch enhances Revenue Guard; it preserves billing integrity when a phase voltage is lost on a 4 wire wye service by converting the 3 element meter to "2 1/2" element operation. So even with a lost phase voltage, Revenue Guard Plus assures accurate revenue metering.

The H softswitch (20 channel; 384KB memory) enables the recording feature in the kV2c+ meter without adding any additional hardware. This recording option enables additional days of storage over the expanded recording option (X softswitch). The meter will record any of the quantities that it measures including voltage, current, energy, apparent power, reactive power, distortion power, power factor, THD, TDD and DPF. See the chart below for a comparison of these recording options:

		Days Storage					
	Softswitch	R		X		H (kV2c+ only)	
Channels	Interval Size	5	15	5	15	5	15
4		20	60	60	181	120	362
20		NA	NA	13	39	26	78

Cost of Service Measurements

Knowing what it costs both Generation and Distribution Utilities to serve a site is a key piece of competitive information. With modern loads, measuring energy and power factor isn't enough.

The Encompass meters will simultaneously measure all of the components of service cost (real & reactive - with and without harmonics, distortion, and vector apparent power).

Catalog Numbers

S Base Catalog Numbers, Basic Meter, No Option Board or Switches

Circuit	Wires	Form	Elements	Class	Catalog #	Replaces
Self Contained 120 – 480 v						
Singlephase	2 3	1S 2S 2S	1	200 200 320	787X200003 787X200001 787X200009	
Singlephase Δ or Network 2ϕ	3 3 5	12S	2	200 320	787X100001 787X100040	
3ϕ Y or Δ	4	16S*	3	200 320	787X400001 787X400005	14S, 15S, 17S
Transformer Rated 120 – 480 v						
Singlephase	2 3	3S 4S	1	20 20	787X300001 787X300006	
3ϕ Y or Δ	4	9S*	3	20	787X900001	8S
3ϕ Y	4	36S	2 1/2	20	787X600001	6S
3ϕ Δ 2ϕ	3 or 4 5	45S	 2	20	787X500001	5S, 35S

*** FITZALL™ Capable Meter**

A Base Catalog Numbers, Basic Meter, No Option Board or Switches

Circuit	Wires	Form	Elements	Class	Catalog #	Replaces
Self Contained 120 – 480 v						
Singlephase 3ϕ Δ Network or 2ϕ	3 3 3	13A	2	150	788X300001	12A but has wider terminal block
3ϕ Y or Δ	4	16A*	3	150	788X400001	14A and 15A
Transformer Rated 120 – 480 v						
3ϕ Y or Δ	4	10A* ♦	3	20	788X000001	8A, 9A & 11A
3ϕ Y	4	36A	2 1/2	20	788X600001	6A, 46A
3ϕ Δ 2ϕ	3 or 4 5	45A	2	20	788X500001	5A
3ϕ Y or Δ	4	48A* ♦	3	20	788X800001	8A, 9A & 11A

*** FITZALL™ Capable Meter** **♦ 10A and 48A are the same except KYZ terminal location**

The Encompass Family...

GE Energy's Newest Line of Electronic Meters

The Encompass family of meters adds the reliability of industry proven current transformers to the powerful kV2 meter electronic design and rugged kV2 mechanical package. In fact, a kV2c looks exactly like a kV2 to meter reading systems and software. If you can read kV2 meters, you can read kV2c meters now.

To obtain more information or to purchase GE Energy's metering products, please call GE 1-STOP at 1-800-431-7867. Product information is also available on our web site. Visit us at http://www.ge.com; select Energy as the Industry; select Utility and Power Distribution as the Energy Industry Solution; select Metering from the section titled Related Products and Accessories on the left.

GE Energy
ge.com

imagination at work

© 2003 General Electric Company, U.S.A.
All Rights Reserved

Encompass, Site Genie and Fitzall are all
trademarks of the General Electric Company

GEA 13371
040113

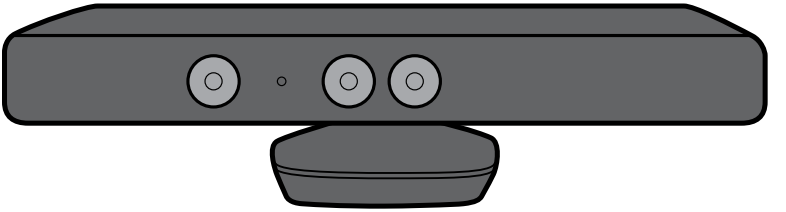

1 English

19 Français

37 Español

59 Português

English

WARNING

Before using this product, read this manual, the Xbox 360® console instructions, and the manuals of any other accessories or games for important safety and health information. Keep all manuals for future reference. For replacement manuals, visit www.xbox.com/support (see "If You Need More Help").

The limited warranty covering this product appears in this manual, which is also available online at www.xbox.com/support.

WARNING

Before allowing children to use the Kinect sensor:

- Determine how each child is able to use the sensor (playing games, chatting or video messaging with other players online) and whether they should be supervised during these activities.
- If you allow children to use the sensor without supervision, be sure to explain all relevant safety and health information and instructions.

Make sure children using the Kinect sensor play safely.

Make sure children using the Kinect sensor play safely and within their limits, and make sure they understand proper use of the system.

This symbol identifies safety and health messages in this manual and Xbox 360 accessories manuals.

2 Xbox 360 Kinect Sensor

3 Adequate Space for Playing

4 Choose a Location for Your Sensor

5 Set Up Your Sensor

9 Clean Your Sensor

10 Troubleshooting

11 If You Need More Help

12 Limited Warranty

14 Software License

16 Regulations

18 Copyright

XBOX 360 KINECT SENSOR

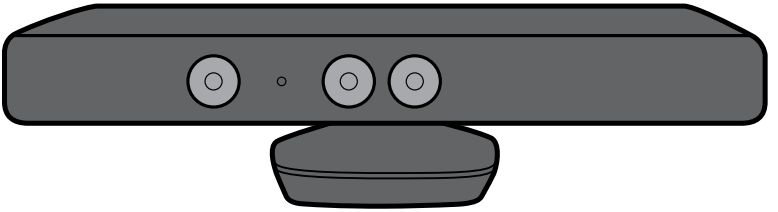

Xbox 360 Kinect Sensor

Thanks for choosing the Xbox 360® Kinect™ Sensor. The Kinect sensor offers a revolutionary new way to play: you're the controller. Just move around and see what happens. Control your Xbox 360 with a wave of your hand. The only experience you need is life experience.

The Kinect sensor is for use with the Xbox 360 video game and entertainment system. To learn more about using the Kinect sensor with a specific game, see the documentation that came with your game.

ADEQUATE SPACE FOR PLAYING

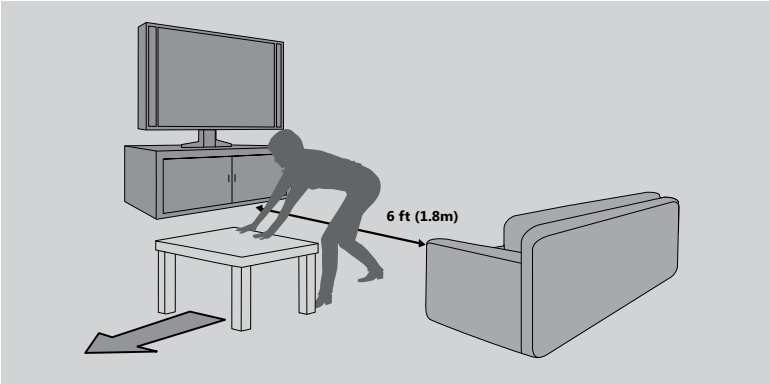

The Kinect sensor needs to be able to see you, and you need room to move. The sensor can see you when you play approximately 6 feet (2 meters) from the sensor. For two people, you should play approximately 8 feet (2.5 meters) from the sensor.

Play space will vary based on your sensor placement and other factors. See your game's instructions for more information about whether it requires only part of the sensor play space.

WARNING

Make sure you have enough space to move freely while playing

Gameplay with your Kinect sensor may require varying amounts of movement. Make sure you won't hit, run into, or trip over other players, bystanders, pets, furniture, or other objects when playing. If you will be standing and/or moving during gameplay, you will also need good footing.

Before playing:

- Look in all directions (right, left, forward, backward, down, and up) for things you might hit or trip over.
- Make sure your play space is far enough away from windows, walls, stairs, etc.
- Make sure there is nothing you might trip on—toys, furniture, or loose rugs, for example. Also, be aware of children and pets in the area. If necessary, move objects or people out of the play space.
- Don't forget to look up. Be aware of light fixtures, fans, and other objects overhead when assessing the play space.

While playing:

- Stay far enough away from the television to avoid contact.
- Keep enough distance from other players, bystanders, and pets. This distance may vary between games, so take account of how you are playing when determining how far away you need to be.
- Stay alert for objects or people you might hit or trip on. People and objects can move into the area during gameplay, so always be alert to your surroundings.

Make sure you always have good footing while playing:

- Play on a level floor with enough traction for game activities.
- Make sure you have appropriate footwear for gaming (no high heels, flip flops, etc.) or are barefoot, if appropriate.

CHOOSE A LOCATION FOR YOUR SENSOR

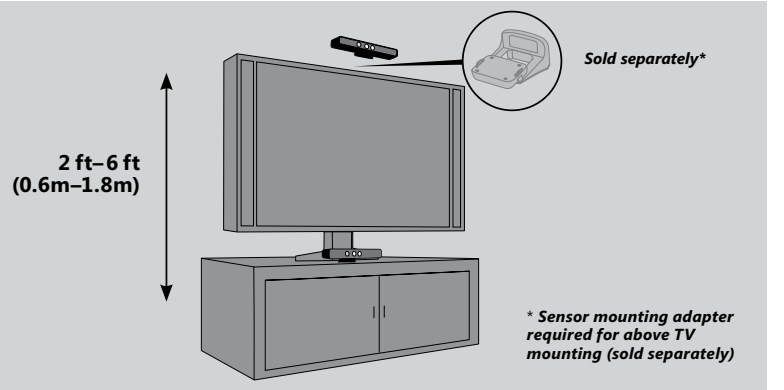

For the best play space and sensor performance, place your sensor between 2 feet and 6 feet (0.6 and 2 meters) high, the closer to the low or high limit, the better. Also:

- Place the sensor on a stable surface.
- Make sure the sensor is aligned with the center of your TV, and as close as possible to the front edge of the table or shelf.
- Make sure to place the sensor in a location where it will not fall or be struck during gameplay.
- Do not put the sensor on your console.
- Do not place the sensor on or in front of a speaker or a surface that vibrates or makes noise.
- Keep the sensor out of direct sunlight.
- Do not use near any heat sources. Use the sensor within its specified operating temperature range of 41 °F – 95 °F (5 °C – 35 °C). If the sensor is exposed to an environment outside its prescribed range, turn it off and allow the temperature to stabilize within the specified range before using the sensor again.

IMPORTANT
Only adjust the sensor location by moving the base. Do not adjust the sensor viewing angle by hand, by tilting the sensor on its base. After setup is complete, let the sensor motors adjust the viewing angle, or you risk damaging your sensor.

⚠ WARNING
Arrange all cables and cords so that people and pets are not likely to trip over or accidentally pull on them as they move around or walk through the area. When the sensor and console are not in use, you may need to disconnect all cables and cords from the sensor and console to keep them out of the reach of children and pets. Do not allow children to play with cables and cords.

⚠ WARNING
Avoid Glare
To minimize eyestrain from glare, try the following:

- Position yourself at a comfortable distance from your television or monitor and the Kinect sensor.
- Place your television or monitor and Kinect sensor away from light sources that produce glare, or use window blinds to control light levels.
- Choose soothing natural light that minimizes glare and eyestrain and increases contrast and clarity.
- Adjust your television or monitor brightness and contrast.

SET UP YOUR SENSOR

Before you can use your Kinect sensor, you need to connect it to your Xbox 360 console. For Xbox 360 S consoles, power is supplied by the console. For original Xbox 360 consoles, you'll also need to connect the sensor to a standard wall outlet.

Connect the Sensor to Your Xbox 360 S Console

To connect to your Xbox 360 S console, simply plug the sensor into the console AUX port.

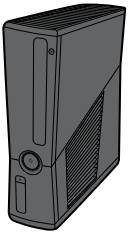

Xbox 360 S

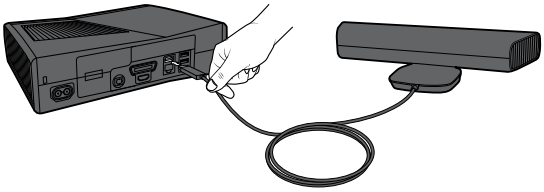

Connect the Sensor to Your Original Xbox 360 Console

The sensor only works with the back USB port on an original Xbox 360 console.

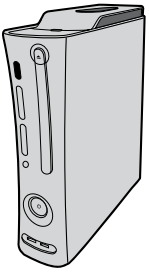

Original Xbox 360

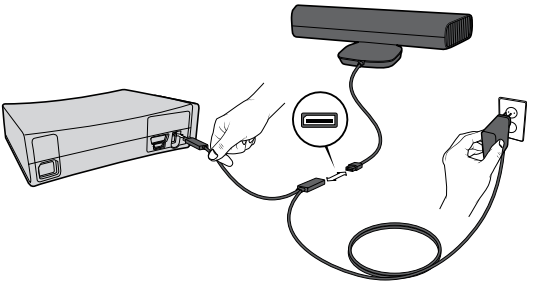

To connect to your original Xbox 360 console:

1. Unplug any accessories from the back USB port on your console.
2. Plug the sensor into the USB/power cable.
3. Plug the USB/power cable into your console's back USB port.
4. Plug the AC adapter end of the USB/power cable into a wall outlet.

Use only the USB/power cable that is shipped with the product or is given to you by an authorized repair center.

If you have an original Xbox 360 console with no hard drive, you should also attach a storage device with at least 256 MB free space. You can use an Xbox 360 Hard Drive, Xbox 360 Memory Unit, or a USB flash drive.

If you're using an Xbox 360 Wireless Networking Adapter that's already connected to the back USB port, you'll need to disconnect its USB cable and reconnect it to a front USB port using the WiFi extension cable, provided.

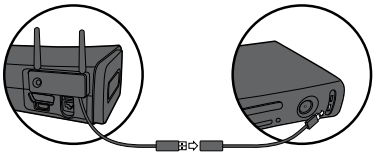

To reconnect a wireless networking adapter to a front USB port, if necessary:

1. Unplug the wireless networking adapter cable from the USB port on the back of the console, leaving the adapter itself attached to the console.
2. Attach the WiFi extension cable to the wireless networking adapter's USB cable.
3. Plug the other end of the extension cable into a USB port on the front of your console.

⚠ Electrical Safety

As with many other electrical devices, failure to take the following precautions can result in serious injury or death from electric shock or fire or damage to the sensor.

If you use AC power, select an appropriate power source:

- The sensor's power input is 12V DC @ 1.1A. Use only the AC adapter on the USB/power cable that came with your sensor or that you received from an authorized repair center.
- Confirm that your electrical outlet provides the type of power indicated on the USB/power cable, in terms of voltage (V) and frequency (Hz). If you aren't sure of the type of power supplied to your home, consult a qualified electrician.
- Do not use non-standard power sources, such as generators or inverters, even if the voltage and frequency appear acceptable. Use only AC power provided by a standard wall outlet.
- Do not overload your wall outlet, extension cord, power strip, or other electrical receptacle. Confirm that they are rated to handle the total current (in amps [A]) drawn by the sensor (indicated on the USB/power cable) and any other devices that are on the same circuit.

To avoid damaging the USB/power cable:

- Protect the cable from being pinched or sharply bent, particularly where it connects to the power outlet and the sensor.
- Protect the cable from being walked on.
- Do not jerk, knot, sharply bend, or otherwise abuse the cable.
- Do not expose the cable to sources of heat.
- Keep children and pets away from the cable. Do not allow them to bite or chew on the cable.
- When disconnecting the cable, pull on the plug—do not pull on the cable.

If the USB/power cable becomes damaged in any way, stop using it immediately and contact Xbox Customer Support for a replacement.

Unplug your sensor's USB/power cable during lightning storms or when unused for long periods of time.

Install the Sensor Software on Your Console

Your console needs a system update before you can use it with your Kinect sensor.

To update your console:

1. Turn on your console and insert the supplied disc. The update will install automatically. If it doesn't start automatically, select the disc tray from the dashboard (as if you were playing a game from a disc).
2. When the installation confirmation message appears, remove the disc and begin setting up your sensor.

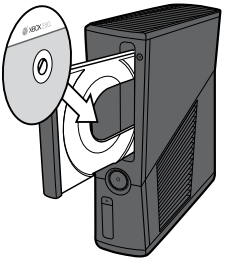

WARNING

Don't overexert yourself

Gameplay with the Kinect sensor may require varying amounts of physical activity.

Consult a doctor before using the sensor if you have any medical condition or issue that affects your ability to safely perform physical activities, or if:

- you are or may be pregnant,
- you have heart, respiratory, back, joint, or other orthopedic conditions,
- you have high blood pressure,
- you have difficulty with physical exercise, or
- you have been instructed to restrict physical activity.

Consult your doctor before beginning any exercise routine or fitness regimen that includes using your sensor.

Do not play under the influence of drugs or alcohol, and make sure your balance and physical abilities are sufficient for any movements while gaming.

Take breaks periodically

- Stop and rest if your muscles, joints, or eyes become tired or sore.
- If you experience excessive fatigue, nausea, shortness of breath, chest tightness, dizziness, discomfort, or pain, STOP USING IMMEDIATELY and consult a doctor.

Adults — attend to children

Make sure children using your sensor play within their limits.

Do not use unlicensed accessories or unauthorized props or other objects with the Kinect sensor

Use of these accessories or objects may result in injury to yourself or others and/or in damage to the sensor or other property.

CLEAN YOUR SENSOR

If you clean the sensor:

- Clean the outside of the sensor only.
- Use a dry cloth—do not use abrasive pads, detergents, scouring powders, solvents (for example, alcohol, gasoline, paint thinner, or benzene), or other liquid or aerosol cleaners.
- Do not use compressed air.
- Do not attempt to clean connectors.
- Clean the surface on which the sensor rests with a dry cloth.
- Do not allow the sensor to become wet. To reduce the risk of fire or shock, do not expose the sensor to rain or other types of moisture.

TROUBLESHOOTING

If you encounter problems, try the possible solutions provided below.

Sensor Doesn't Work

- Make sure cables are connected. When used with an original Xbox 360 console, make sure the sensor is connected to the back USB port, and the USB/power cable is plugged in. The light on the front of the sensor will light up when the sensor is on.
- Make sure the sensor is in a well-ventilated area.
- If the sensor software hasn't been set up, insert the sensor software disc for a system update.

Sensor Doesn't See Player

- Play in the sensor's play space.
- Turn on lights to brighten the play space.
- Prevent lights, including sunlight, from shining directly on the sensor.
- Try wearing different clothing that contrasts with the background of your play space.
- Clean the sensor lens with a dry cloth.
- Make sure nothing is blocking the sensor's viewing angle.

Sensor Loses Player

Try leaving and reentering the play space if the sensor has stopped tracking you.

Sensor Doesn't Hear Player

- Don't place the sensor near sources of vibration, TV speakers, or other audio sources.
- Make sure nothing is blocking the sensor's microphone array.

Sensor Motors Don't Adjust Sensor Viewing Angle

- Make sure cables are connected and the sensor light is on. When used with an original Xbox 360 console, the sensor must be connected to the back USB port, not a front USB port, and the USB/power cable must be connected to a power outlet.
- Make sure the sensor's motion isn't blocked by anything.
- Don't tilt your sensor on its base or adjust the sensor viewing angle by hand. Let the sensor motors adjust the viewing angle automatically, or you risk damaging your sensor.

IF YOU NEED MORE HELP

For answers to common questions, troubleshooting steps, and Xbox Customer Support contact information, visit www.xbox.com/support.

Do not take your Xbox 360 console or its accessories to your retailer for repair. Please visit www.xbox.com/support for troubleshooting and service information.

⚠ WARNING

Do Not Attempt Repairs

Do not attempt to take apart, open, service, or modify the hardware device or power supply. Doing so could present the risk of electric shock or other hazard. Any evidence of any attempt to open and/or modify the device, including any peeling, puncturing, or removal of any of the labels, will void the Limited Warranty.

LIMITED WARRANTY

BY USING YOUR KINECT SENSOR YOU AGREE TO THIS WARRANTY. BEFORE SETTING IT UP, PLEASE READ THIS WARRANTY CAREFULLY. IF YOU DO NOT ACCEPT THIS WARRANTY, DO NOT USE YOUR KINECT SENSOR. RETURN IT UNUSED TO YOUR RETAILER OR MICROSOFT FOR A REFUND. Contact Microsoft at http://www.xbox.com/ (800) 4MY-XBOX or (800) 469-9269. This warranty gives You specific legal rights. You may also have other rights which vary from State to State or Province to Province.

1. Definitions

(a) "Kinect Sensor" means a new Kinect Sensor purchased from an authorized retailer.

(b) "Warranty Period" means 1 year from the date You purchased Your Kinect Sensor.

(c) "You" means the original end-user.

(d) "Normal Use Conditions" means ordinary consumer use under normal home conditions according to the instruction manual for the Kinect Sensor.

(e) "State" means a State, the District of Columbia, and any other United States territory or possession. "The United States of America" includes all of them.

2. Warranty

(a) During the Warranty Period, Microsoft warrants, only to You, that the Kinect Sensor will not malfunction under Normal Use Conditions.

(b) This is the only warranty Microsoft gives for Your Kinect Sensor and Microsoft gives no other guarantee, warranty, or condition. No one else may give any guarantee, warranty, or condition on Microsoft's behalf.

(c) IF YOUR STATE'S OR PROVINCE'S LAW GIVES YOU ANY IMPLIED WARRANTY, INCLUDING AN IMPLIED WARRANTY OF MERCHANTABILITY OR FITNESS FOR A PARTICULAR PURPOSE, ITS DURATION IS LIMITED TO THE WARRANTY PERIOD. Some States or Provinces do not allow limitations on how long an implied warranty lasts, so this limitation may not apply to You.

3. How to Get Warranty Service

(a) Before starting the warranty process, please use the trouble-shooting tips at http://www.xbox.com/en-US (United States) or http://www.xbox.com/en-CA (Canada).

(b) If the troubleshooting tips don't resolve Your problem, then follow the online process at http://www.xbox.com/en-US (United States) or http://www.xbox.com/en-CA (Canada). If You don't have access to the Internet, You can call (800) 4MY-XBOX or (800) 469-9269.

4. Microsoft's Responsibility

(a) After You return Your Kinect Sensor Microsoft will inspect it.

(b) If Microsoft determines that the Kinect Sensor malfunctioned during the Warranty Period under Normal Use Conditions, Microsoft will (at its option) repair or replace it, or refund the purchase price to You. Repair may use new or refurbished parts. Replacement may be with a new or refurbished unit.

(c) After repair or replacement, Your Kinect Sensor will be covered by this warranty for the longer of the remainder of Your original Warranty Period, or 95 days after Microsoft ships it to You.

(d) MICROSOFT'S RESPONSIBILITY TO REPAIR OR REPLACE YOUR KINECT SENSOR, OR TO REFUND THE PURCHASE PRICE, IS YOUR EXCLUSIVE REMEDY.

(e) If Your Kinect Sensor malfunctions after the Warranty Period expires, there is no warranty of any kind. After the Warranty Period expires, Microsoft may charge You a fee for its efforts to diagnose and service any problems with Your Kinect Sensor.

5. Warranty Exclusions

Microsoft is not responsible and this warranty does not apply if Your Kinect Sensor is:

(a) damaged by use with products not sold or licensed by Microsoft (including, for example, games and accessories not manufactured or licensed by Microsoft, and "pirated" games, etc.);

(b) used for commercial purposes (including, for example, rental, pay-per-play, etc.);

(c) opened, modified, or tampered with (including, for example, any attempt to defeat any Kinect Sensor technical limitation, security, or anti-piracy mechanism, etc.), or its serial number is altered or removed;

(d) damaged by any external cause (including, for example, by being dropped, used with inadequate ventilation, etc., or failure to follow instructions in the instruction manual for the Kinect Sensor); or

(e) repaired by anyone other than Microsoft.

6. EXCLUSION OF CERTAIN DAMAGES

MICROSOFT IS NOT RESPONSIBLE FOR ANY INDIRECT, INCIDENTAL, SPECIAL, OR CONSEQUENTIAL DAMAGES; ANY LOSS OF DATA, PRIVACY, CONFIDENTIALITY, OR PROFITS; OR ANY INABILITY TO USE YOUR KINECT SENSOR. THESE EXCLUSIONS APPLY EVEN IF MICROSOFT HAS BEEN ADVISED OF THE POSSIBILITY OF THESE DAMAGES, AND EVEN IF ANY REMEDY FAILS OF ITS ESSENTIAL PURPOSE. Some States or Provinces do not allow the exclusion or limitation of incidental or consequential damages, so this limitation or exclusion may not apply to You.

7. Additional Terms

If You attempt to defeat or circumvent any Kinect Sensor technical limitation, security, or anti-piracy system, You may cause Your Kinect Sensor to stop working permanently. You will also void Your warranty, and make Your Kinect Sensor ineligible for authorized repair, even for a fee.

8. Choice of Law

(a) If You acquired Your Kinect Sensor in the United States, Washington State law governs the interpretation of this warranty and any claim that Microsoft has breached it, regardless of conflict of law principles.

(b) If You acquired Your Kinect Sensor in Canada, Ontario Provincial law governs the interpretation of this warranty and any claim that Microsoft has breached it, regardless of conflict of law principles.

(c) The laws of the State or Province where You live govern all other claims (including consumer protection, unfair competition, implied warranty, and tort claims).

All parts of this Limited Warranty apply to the maximum extent permitted by law or unless prohibited by law

9. This warranty is valid only in the United States of America and Canada.

Microsoft's address in the United States: Microsoft Corporation, One Microsoft Way, Redmond, WA 98052

Microsoft's address in Canada: Microsoft Canada Inc., 1950 Meadowvale Blvd., Mississauga, Ontario, L5N 8L9

SOFTWARE LICENSE

BY USING YOUR KINECT SENSOR YOU AGREE TO THIS SOFTWARE LICENSE. BEFORE SETTING IT UP, PLEASE READ THIS SOFTWARE LICENSE CAREFULLY. IF YOU DO NOT ACCEPT THIS SOFTWARE LICENSE, DO NOT USE YOUR KINECT SENSOR. RETURN IT TO UNUSED TO YOUR RETAILER OR MICROSOFT FOR A REFUND. Contact Microsoft at http://www.xbox.com/ (800) 4MY-XBOX or (800) 469-9269.

1. Definitions

(a) "Xbox 360 S" means an Xbox 360 S console.

(b) "Authorized Accessory" means a Microsoft branded Xbox 360 or Xbox 360 S hardware accessory, and a Microsoft licensed, third party branded, Xbox 360 or Xbox 360 S hardware accessory whose packaging bears the official "Licensed for Xbox" logo. The Kinect Sensor is an Authorized Accessory solely for purpose of this software license.

(c) "Authorized Games" means Xbox 360 or Xbox 360 S games on game discs published or licensed by Microsoft, and game content downloaded from Microsoft's Xbox LIVE service or Xbox.com Web site (for example, avatars, downloadable games, game add-ons, etc.).

(e) "Software" means the software pre-installed in the Kinect Sensor, including any updates Microsoft may make available from time to time.

(e) "Unauthorized Accessories" means all hardware accessories other than an Authorized Accessory, except that USB memory sticks, digital cameras used to make photographs or movies, and music players used to play music or display photographs or videos are not Unauthorized Accessories.

(f) "Unauthorized Games" means all game discs, game downloads, and game content or media other than Authorized Games.

(g) "Unauthorized Software" means any software not distributed by Microsoft through Xbox 360 or Xbox 360 S game discs published or licensed by Microsoft, Microsoft's Xbox LIVE service, or Xbox.com Web site.

(h) "You" means the user of a Kinect Sensor.

2. License

(a) The Software is licensed to You, not sold. You are licensed to use the Software only as pre-installed in Your Kinect Sensor, and updated by Microsoft from time to time. You may not copy or reverse engineer the Software.

(b) As conditions to this Software license, You agree that:

(i) **You will use Your Kinect Sensor with Xbox 360 or Xbox 360 S only and not with any other device (including, for example, personal computers, other video game consoles, etc.). You will use only Authorized Games with Your Kinect Sensor. You will not use Unauthorized Accessories or Unauthorized Games. They may not work or may stop working permanently after a Software update.**

(ii) **You will not use or install any Unauthorized Software. If You do, Your Kinect Sensor may stop working permanently at that time or after a later Software update.**

(iii) You will not attempt to defeat or circumvent any Kinect Sensor technical limitation, security, or anti-piracy system. If You do, Your Kinect Sensor may stop working permanently at that time or after a later Software update.

(iv) Microsoft may use technical measures, including Software updates, to limit use of the Kinect Sensor to Xbox 360 or Xbox 360 S, to prevent use of Unauthorized

Accessories and Unauthorized Games, and to protect the technical limitations, security and anti-piracy systems in the Kinect Sensor.

(v) **Microsoft may update the Software from time to time without further notice to You, for example, to update any technical limitation, security, or anti-piracy system**.

3. Warranty.

The Software is covered by the Limited Warranty for Your Kinect Sensor, and Microsoft gives no other guarantee, warranty, or condition for the Software. No one else may give any guarantee, warranty, or condition on Microsoft's behalf.

4. EXCLUSION OF CERTAIN DAMAGES

MICROSOFT IS NOT RESPONSIBLE FOR ANY INDIRECT, INCIDENTAL, SPECIAL, OR CONSEQUENTIAL DAMAGES; ANY LOSS OF DATA, PRIVACY, CONFIDENTIALITY, OR PROFITS; OR ANY INABILITY TO USE THE SOFTWARE. THESE EXCLUSIONS APPLY EVEN IF MICROSOFT HAS BEEN ADVISED OF THE POSSIBILITY OF THESE DAMAGES, AND EVEN IF ANY REMEDY FAILS OF ITS ESSENTIAL PURPOSE. Some States or Provinces do not allow the exclusion or limitation of incidental or consequential damages, so this limitation or exclusion may not apply to You.

5. Choice of Law

(a) If You acquired Your Kinect Sensor in the United States, Washington State law governs the interpretation of this Software license and any claim that Microsoft has breached it, regardless of conflict of law principles.

(b) If You acquired Your Kinect Sensor in Canada, Ontario Provincial law governs the interpretation of this Software license and any claim that Microsoft has breached it, regardless of conflict of law principles.

(c) The laws of the State or Province where You live govern all other claims (including consumer protection, unfair competition, implied warranty, and tort claims).

This agreement applies to the maximum extent permitted by law and unless prohibited by law. This agreement does not change your rights under the laws of your State or country if the laws of your State or country do not permit it to do so.

Microsoft's address in the United States: Microsoft Corporation, One Microsoft Way, Redmond, WA 98052

Microsoft's address in Canada: Microsoft Canada Inc., 1950 Meadowvale Blvd., Mississauga, Ontario, L5N 8L9

REGULATIONS

Disposal of Waste Batteries and Electrical & Electronic Equipment

This symbol on the product or its batteries or its packaging means that this product and any batteries it contains must not be disposed of with your household waste. Instead, it is your responsibility to hand this over to an applicable collection point for the recycling of batteries and electrical and electronic equipment. This separate collection and recycling will help to conserve natural resources and prevent potential negative consequences for human health and the environment due to the possible presence of hazardous substances in batteries and electrical and electronic equipment, which could be caused by inappropriate disposal. For more information about where to drop off your batteries and electrical and electronic waste, please contact your local city/municipality office, your household waste disposal service, or the shop where you purchased this product.

This product is for use with NRTL-listed (UL, CSA, ETL, etc.) and/or IEC/EN 60950 compliant (CE marked) Information Technology equipment.

Laser Specifications

⚠ CAUTION

Use of controls or adjustments, or performance of procedures other than those specified herein may result in hazardous radiation exposure.

This device complies with International Standard IEC 60825-1:2007:03 for a Class 1 laser product. This device also complies with 21 CFR 1040.10 and 1040.11 except for deviations pursuant to Laser Notice No. 50, dated June 24, 2007.

The following Class 1 laser label is located on the foot of the sensor.

For Customers in the United States

FCC Declaration of Conformity (DoC):

Trade Name:	Microsoft Corp.
Models:	1414
Responsible Party:	Microsoft Corporation
Address:	One Microsoft Way, Redmond, WA 98052 U.S.A.
Telephone No.:	(800) 4MY-XBOX

This device complies with Part 15 of the FCC Rules. Operation is subject to the following two conditions: (1) this device may not cause harmful interference, and (2) this device must accept any interference received, including interference that may cause undesired operation.

This equipment has been tested and found to comply with the limits for a Class B digital device, pursuant to Part 15 of the FCC rules. These limits are designed to provide reasonable protection against harmful interference in a residential installation. This equipment generates, uses, and can radiate radio frequency energy.

If not installed and used in strict accordance with the instructions given in the printed documentation and/or on-screen help files, the device may cause harmful interference with other radio-communications devices (AM/FM radios, televisions, baby monitors, cordless phones, etc.). There is, however, no guarantee that RF interference will not occur in a particular installation.

To determine if your hardware device is causing interference to other radio-communications devices, disconnect the device from your computer or remove the device's batteries (for a battery operated device). If the interference stops, it was probably caused by the device. If the interference continues after you disconnect the device or remove the batteries, turn the device off and then on again. If the interference stopped when the device was off, check to see if one of the input/output (I/O) devices is causing the problem. Disconnect the I/O devices one at a time and see if the interference stops.

If this hardware device does cause interference, try the following measures to correct it:

- Relocate the antenna of the other radio-communications device (AM/FM radio, television, baby monitor, cordless phone, etc.) until the interference stops.
- Move the hardware device farther away from the radio or TV, or move it to one side or the other of the radio or TV.
- Plug the device into a different power outlet so that the device and radio or TV are on different circuits controlled by different circuit breakers or fuses.
- If necessary, consult the dealer or an experienced radio/TV technician for more suggestions.

⚠ CAUTION

Any changes or modifications made on the system not expressly approved by the manufacturer could void the user's authority to operate the equipment.

For Customers in Canada

This Class B digital apparatus complies with Canadian ICES-003.

Operation is subject to the following two conditions: (1) this device may not cause harmful interference, and (2) this device must accept any interference received, including interference that may cause undesired operation.

COPYRIGHT

Information in this document, including URL and other Internet Web site references, is subject to change without notice. Unless otherwise noted, the example companies, organizations, products, domain names, e-mail addresses, logos, people, places and events depicted herein are fictitious, and no association with any real company, organization, product, domain name, e-mail address, logo, person, place or event is intended or should be inferred. Complying with all applicable copyright laws is the responsibility of the user. Without limiting the rights under copyright, no part of this document may be reproduced, stored in or introduced into a retrieval system, or transmitted in any form or by any means (electronic, mechanical, photocopying, recording, or otherwise), or for any purpose, without the express written permission of Microsoft Corporation.

Microsoft may have patents, patent applications, trademarks, copyrights, or other intellectual property rights covering subject matter in this document. Except as expressly provided in any written license agreement from Microsoft, the furnishing of this document does not give you any license to these patents, trademarks, copyrights, or other intellectual property.

© 2010 Microsoft Corporation. All rights reserved.

Microsoft, Xbox, Xbox 360, Xbox LIVE, the Xbox logos, the Xbox LIVE logo, and Kinect are trademarks of the Microsoft group of companies.

CUSTOMER SUPPORT

For answers to common questions, troubleshooting steps, and Xbox Customer Support contact information, visit **www.xbox.com/support**.

Solar Inverter

SUNNY BOY 5000-US / 6000-US / 7000-US / 8000-US

Installation Guide

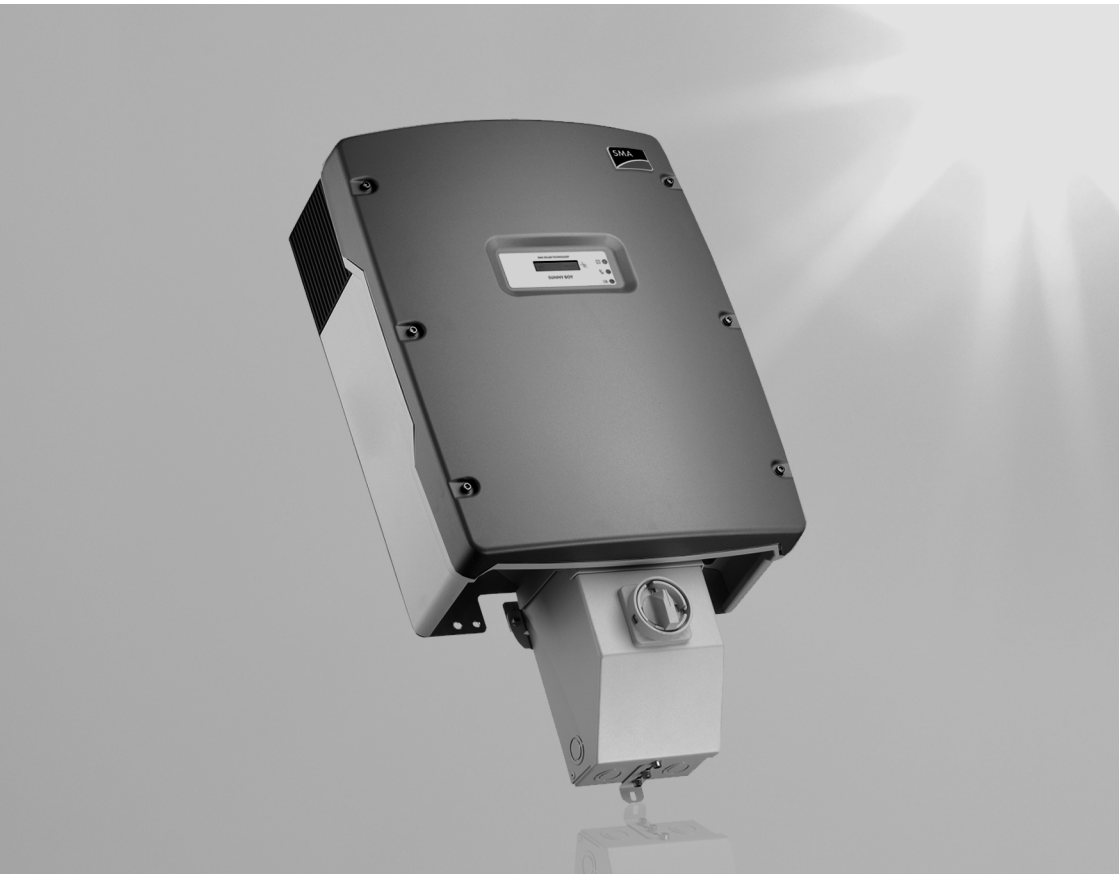

SB50US-80US-IUS101331 | TBUS-SB50_60_70US | Version 3.1

US

Copyright © 2010 SMA America, LLC. All rights reserved.

No part of this document may be reproduced, stored in a retrieval system, or transmitted, in any form or by any means, electronic, mechanical, photographic, magnetic or otherwise, without the prior written permission of SMA America, LLC.

SMA America, LLC makes no representations, express or implied, with respect to this documentation or any of the equipment and/or software it may describe, including (with no limitation) any implied warranties of utility, merchantability, or fitness for any particular purpose. All such warranties are expressly disclaimed. Neither SMA America, LLC nor its distributors or dealers shall be liable for any indirect, incidental, or consequential damages under any circumstances.

(The exclusion of implied warranties may not apply in all cases under some statutes, and thus the above exclusion may not apply.)

Specifications are subject to change without notice. Every attempt has been made to make this document complete, accurate and up-to-date. Readers are cautioned, however, that SMA America, LLC reserves the right to make changes without notice and shall not be responsible for any damages, including indirect, incidental or consequential damages, caused by reliance on the material presented, including, but not limited to, omissions, typographical errors, arithmetical errors or listing errors in the content material.

All trademarks are recognized even if these are not marked separately. Missing designations do not mean that a product or brand is not a registered trademark.

The *Bluetooth*® word mark and logos are registered trademarks owned by Bluetooth SIG, Inc. and any use of such marks by SMA America, LLC is under license.

SMA America, LLC

3801 N. Havana Street

Denver, CO 80239 U.S.A.

IMPORTANT SAFETY INSTRUCTIONS

SAVE THESE INSTRUCTIONS

This manual contains important instructions for Sunny Boy inverter, that must be followed during installation and maintenance of the inverter.

The Sunny Boy is designed and tested according to international safety requirements, but as with all electrical and electronic equipment, certain precautions must be observed when installing and/or operating the Sunny Boy. To reduce the risk of personal injury and to ensure the safe installation and operation of the Sunny Boy, you must carefully read and follow all instructions, cautions and warnings in this installation guide.

Warnings in this document

A warning describes a hazard to equipment or personnel. It calls attention to a procedure or practice, which, if not correctly performed or adhered to, could result in damage to or destruction of part or all of the SMA equipment and/or other equipment connected to the SMA equipment or personal injury.

DANGER

DANGER indicates a hazardous situation which, if not avoided, will result in death or serious injury.

WARNING

WARNING indicates a hazardous situation which, if not avoided, could result in death or serious injury.

CAUTION

CAUTION indicates a hazardous situation which, if not avoided, could result in minor or moderate injury.

NOTICE

NOTICE is used to address practices not related to personal injury.

Other symbols in this document

In addition to the safety and hazard symbols described on the previous pages, the following symbol is also used in this installation guide:

Information

This symbol accompanies notes that call attention to supplementary information that you must know and use to ensure optimal operation of the system.

Markings on this product

The following symbols are used as product markings with the following meanings.

Warning regarding dangerous voltage

The product works with high voltages. All work on the product must only be performed as described in it's documentation.

Electric arc hazards

The product has large electrical potential differences between its conductors. Arc flashes can occur through air when high-voltage current flows. Do not work on the product during operation.

Beware of hot surface

The product can become hot during operation. Do not touch the product during operation.

Observe the operating instructions

Read the product's documentation before working on it. Follow all safety precautions and instructions as described in the documentation.

AC current

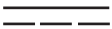

DC current

Earth Ground

UL1741 is the standard applied by Underwriters Laboratories to the Sunny Boy to certify that it meets the requirements of the *National Electrical Code*® and IEEE-929-2000. IEEE 929-2000 provides recommendations regarding the proper equipment and functionality necessary to ensure compatible operation when power generation is connected to the utility grid.

General Warnings

General Warnings

All electrical installations must be done in accordance with the local and *National Electrical Code*® ANSI/NFPA 70. For installation in Canada the installations must be done in accordance with applicable Canadian standards.

The Sunny Boy contains no user-serviceable parts except for the fans on the bottom of the enclosure and the filters behind the fans as well as the handle covers on the sides of the unit. For all repair and maintenance, always return the unit to an authorized SMA Service Center.

Before installing or using the Sunny Boy, read all of the instructions, cautions, and warnings on the Sunny Boy in this installation guide.

Before connecting the Sunny Boy to the electrical utility grid, contact the local utility company. This connection must be made only by qualified personnel.

Wiring of the Sunny Boy must be made by qualified personnel only.

Table of Contents

1 Notes on this manual 11
1.1 Validity 11
1.2 Target group 11
1.3 Storage of the documentation 11
1.4 Additional information 11
1.5 Nomenclature 11
2 Safety 12
2.1 Appropriate usage 12
2.2 Safety instructions 14
2.3 Installation overview 15
3 Unpacking and inspection 16
3.1 Scope of delivery 17
4 AC Voltage configuration 18
4.1 Opening the Sunny Boy 18
4.2 Locating internal components 19
4.3 Configuring the AC voltage 20
4.4 Utility configuration jumpers 23
5 Mounting 25
5.1 Safety 25
5.2 Selecting the mounting location 26
5.3 Mounting the Sunny Boy with the wall mounting bracket 28
5.3.1 Possibilities for mounting the wall mounting bracket 30
5.3.2 Mounting the wall mounting bracket 31
5.3.3 Mounting the SMA DC Disconnect 33
5.3.4 Mounting the Sunny Boy onto the wall mounting bracket 34
6 Electrical connection 35

6.1 Connection area of the Sunny Boy 37
6.1.1 Wiring without SMA DC Disconnect. 37
6.1.2 Wiring with SMA DC Disconnect 38
6.2 Opening the Sunny Boy 38
6.3 Opening the SMA DC Disconnect 39
6.4 AC wiring 40
6.4.1 AC connection requirements 40
6.4.2 AC wiring without SMA DC Disconnect 45
6.4.3 AC wiring with SMA DC Disconnect. 47
6.5 DC wiring 51
6.5.1 DC connection requirements 52
6.5.2 DC input grounding. 53
6.5.3 DC wiring without SMA DC Disconnect 54
6.5.4 DC wiring with SMA DC Disconnect. 55
6.5.5 DC connection with additional DC distribution 60
6.6 Communication 61
6.7 Closing the Sunny Boy 62
6.8 Closing the SMA DC Disconnect 63
7 Commissioning 64
8 Displays and messages 65
8.1 LED operation indicators 66
8.2 LED fault indicators 69
8.3 Status messages on the LCD display. 72
8.3.1 LCD display language selection 73
8.4 Measuring channels and parameters 75
8.4.1 Measuring channels 75
8.4.2 Operating mode 76
8.4.3 Sunny Boy operating parameters 76
8.4.4 Operating parameters of the Sunny Boy 76
8.4.5 Fixed operating parameters of the Sunny Boy 79

9 Troubleshooting 80
9.1 General. 80
9.2 Error messages 81
10 Maintenance. 84
10.1 Cleaning the fans 84
10.2 Cleaning the handle covers 85
10.3 Checking the DC Disconnect 85
10.4 Testing the fans 86
10.5 Exchanging the fuses 87
10.5.1 Exchanging the GFDI fuse within the Sunny Boy 87
10.5.2 Exchanging PV string fuses within the SMA DC Disconnect 88
11 Technical data. 90
11.1 FCC compliance information 90
11.2 Sunny Boy wiring diagrams 91
11.2.1 Without SMA DC Disconnect 91
11.2.2 With SMA DC Disconnect 92
11.3 Specifications 93
11.4 Sunny Boy 5000-US. 93
11.5 Sunny Boy 6000-US. 95
11.6 Sunny Boy 7000-US. 97
11.7 Sunny Boy 8000-US. 99
11.7.1 SMA DC Disconnect. 100
11.8 Trip limits/trip times. 101
11.9 Torque values and wire sizes 102
12 Accessories 102
13 Contact 103

1 Notes on this manual

1.1 Validity

This manual describes the assembly, installation, commissioning and maintenance of the following SMA inverters:

- Sunny Boy 5000-US
- Sunny Boy 6000-US
- Sunny Boy 7000-US
- Sunny Boy 8000-US

This manual does not cover any details concerning equipment connected to the Sunny Boy (e. g. PV modules). Information concerning the connected equipment is available from the manufacturer of the equipment.

1.2 Target group

This manual is for qualified personnel. Qualified personnel have received training and have demonstrated skills and knowledge in the construction and operation of this device. Qualified personnel are trained to deal with the dangers and hazards involved in installing electric devices.

1.3 Storage of the documentation

Keep all Sunny Boy manuals in a convenient place for future reference.

1.4 Additional information

You will find further information on special topics in the download area at www.SMA-America.com.

1.5 Nomenclature

In this document SMA America Production, LLC is referred to in the following as SMA.

2 Safety

2.1 Appropriate usage

The Sunny Boy is a DC to AC grid-tied utility interactive inverter for use with photovoltaic (PV), fuel cell, wind turbine and other sources of DC power.

In general, the Sunny Boy takes power from a DC source (PV modules) and converts it to AC power for the utility grid. This power is delivered first to local loads (household appliances, lights, motor loads, etc.), with any excess power fed to the utility. The power consumed by the local loads reduces the power needed from the utility. Excess power may actually spin the utility meter backwards depending on the type of meter in your system. This power may also be recorded as power credits by the utility company depending on the interconnection agreement. An example of basic system components is shown in figure below.

Principle of a PV plant with a Sunny Boy

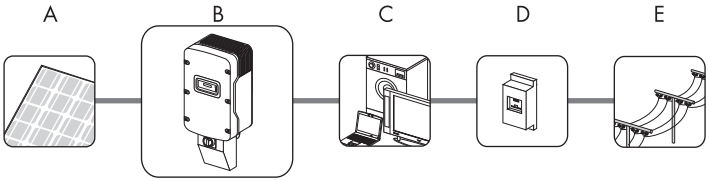

Position	Description
A	PV array
B	Sunny Boy with SMA DC Disconnect
C	Local loads
D	Energy meter
E	Utility Grid

Policies vary from one utility company to another. Consult with a representative of the local utility company before designing and installing a PV system.

Anti-Islanding protection

Islanding is a condition that can occur if the utility grid is disconnected while the Sunny Boy is operating and the remaining load is resonant at 60 Hz and matches the output of the Sunny Boy perfectly. This condition is highly unlikely and had never been witnessed outside of a controlled laboratory. Nevertheless, the Sunny Boy incorporates an advanced active islanding protection algorithm to ensure that the system will not export power into a balanced 60 Hz resonant load while the utility is disconnected. The Sunny Boy periodically injects both leading and lagging reactive current into the utility grid. This method has been proven by Underwriters Laboratories to effectively destabilize and disconnect from a balanced island condition.

PV ground fault detection and interruption

The Sunny Boy is equipped with a ground fault detection device. If a ground fault current greater than 1 Amp is detected, the Sunny Boy will shut down and display the fault condition on the user interface display. Once the ground fault is located and corrected, the ground fault error will need to be manually cleared and the inverter will then resume normal operation.

PV series fusing

Series fusing may be required depending on the type of PV module used in the system. See NEC 690.9.

Operating temperature

The Sunny Boy has been designed to maintain full power output at ambient temperatures as high as 113 °F. Fan cooling allows this level of output power to be achieved even in enclosed spaces. The Sunny Boy will continue to operate well beyond 113 °F and de-rates as needed to maintain a safe internal component temperature.

Interconnection code compliance

The Sunny Boy has been tested and listed by Underwriters Laboratories to meet the requirements of UL1741 Static Inverters and Charge Controllers for use in Photovoltaic Power Systems and UL1998 Software in Programmable Components, as well as IEEE-929-2000 Recommended Practice for Utility Interface of Photovoltaic Systems and IEEE 1547 Standard for Interconnecting Distributed Resources with Electric Power Systems. The Sunny Boy is also listed under UL1741 for Canadian UL.

UL1741 is the standard applied by Underwriters Laboratories to the Sunny Boy to certify that it meets the requirements of the NEC and IEEE-929-2000. IEEE 929-2000 provides recommendations regarding the proper equipment and functionality necessary to ensure compatible operation when power generation is connected to the utility grid.

Contact the local utility and/or the authority having jurisdiction prior to connecting the Sunny Boy to the utility grid.

FCC compliance

The Sunny Boy has been tested and shown to conform with all FCC Part 15 A & B EMI/EMC emissions regulations.

2.2 Safety instructions

DANGER

High voltages are present in the Sunny Boy during operation.

Death or serious injury due to electric shock.

- All work on the Sunny Boy must only be carried out by qualified personnel.

WARNING

The Sunny Boy can become hot during operation.

Risk of burns.

- Do not touch enclosure during operation.
- Only touch lid during operation.

2.3 Installation overview

This section provides a brief overview of the installation process so of a Sunny Boy.

Section 2: Unpacking and inspection

This section provides instructions and information for unpacking the Sunny Boy and inspecting it for shipping damage.

Section 3: AC voltage configuration

This section includes information on removing the lid, locating primary components within the inverter and selecting the appropriate voltage configuration for the installation.

Section 4: Mounting

This section includes guidelines to help you select the best mounting location, suggestions to insure optimum performance, cautions and warnings that you should follow to avoid injury and/or equipment damage and step-by-step instructions for mounting the Sunny Boy inverter.

Section 5: Wiring the Sunny Boy

This section includes guidelines for selecting the correct wire sizes, cautions and warnings that you should follow to avoid injury and/or equipment damage and step-by-step instructions for wiring the Sunny Boy to a PV array, household electrical circuits and the utility grid. Procedures are also included for connecting optional data-communication cables.

Section 6: Commissioning

Commissioning involves applying DC input power to the Sunny Boy, observing the LED and LCD indicators on the front cover, and resolving any problems that occur.

Section 7: Displays and messages

This section provides troubleshooting tips and procedures for resolving problems that may occur during installation and operation.

Section 8: Troubleshooting

This section provides troubleshooting tips and procedures for resolving problems that may occur during installation and operation.

Section 9: Maintenance

This section includes maintenance and cleaning of the Sunny Boy and cautions and warnings you should follow to avoid injury and/or equipment damage.

Section 10: Technical data

This section includes technical data for the Sunny Boy, connection diagrams and torque specifications for the connection of cables and the screws of the Sunny Boy.

3 Unpacking and inspection

All Sunny Boy inverters are thoroughly tested and inspected before they are packed and shipped. Although they are shipped in sturdy, recyclable packaging; damage can still occur during shipping. It is important to carefully inspect the shipping container prior to beginning the installation. If any external damage to the packaging makes you suspect the inverter itself could be damaged, or if you find that the inverter is damaged after unpacking it, report the damage immediately to your SMA dealer and to the shipping company that delivered the Sunny Boy. If it becomes necessary to return the Sunny Boy, use the original packaging in which it was delivered.

CAUTION

Falling of the Sunny Boy may cause injuries.

Crushing of body parts will result.

Take the weight of the Sunny Boy of 148 lbs. (67 kg) into account when mounting.

If you need assistance with a damaged Sunny Boy, contact your SMA dealer or SMA.

Contact information is provided in section „Contact“, page 103.

3.1 Scope of delivery

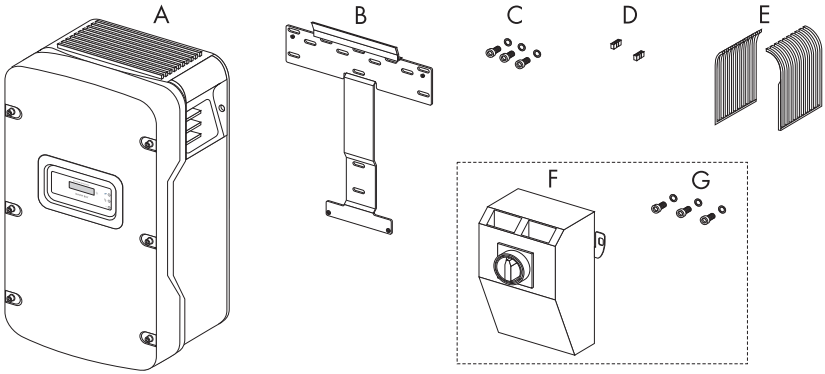

Position	Number	Description
A	1	Sunny Boy
B	1	Wall-mounting bracket
C	1	Spare screw and spare washer for closing the Sunny Boy lid
	2	Screws and washers for fastening the Sunny Boy to the wall-mounting bracket
D	2	Spare jumpers for fan test
E	2	Handle covers (left and right)
F	1	SMA DC Disconnect
G	1	Screw and washer for closing the DC Disconnect lid
	2	Screws and washers for fastening the DC Disconnect to the wall-mounting bracket

4 AC Voltage configuration

4.1 Opening the Sunny Boy

NOTICE

Damage of the lid could result in an inadequate seal between the lid and the enclosure.

Ingress of humidity.

Damage to the Sunny Boy will result.

- Ensure no moisture is trapped inside the enclosure when mounting the lid.
- Handle the lid carefully.
- Do not misplace the screws and lock washers that attach the lid.
- Do not install the Sunny Boy during periods of precipitation or high humidity (> 95 %).

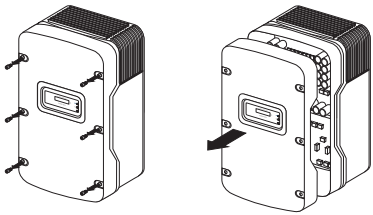

1. Remove the six screws and lock washers from the lid and pull the lid forward smoothly.
2. Place the lid, screws, and lock washers aside where they will be out of your way while you are connecting wires and cables to the Sunny Boy.

4.2 Locating internal components

The figure below illustrates the locations of the major internal components of the Sunny Boy. Refer to this illustration as needed to locate particular components.

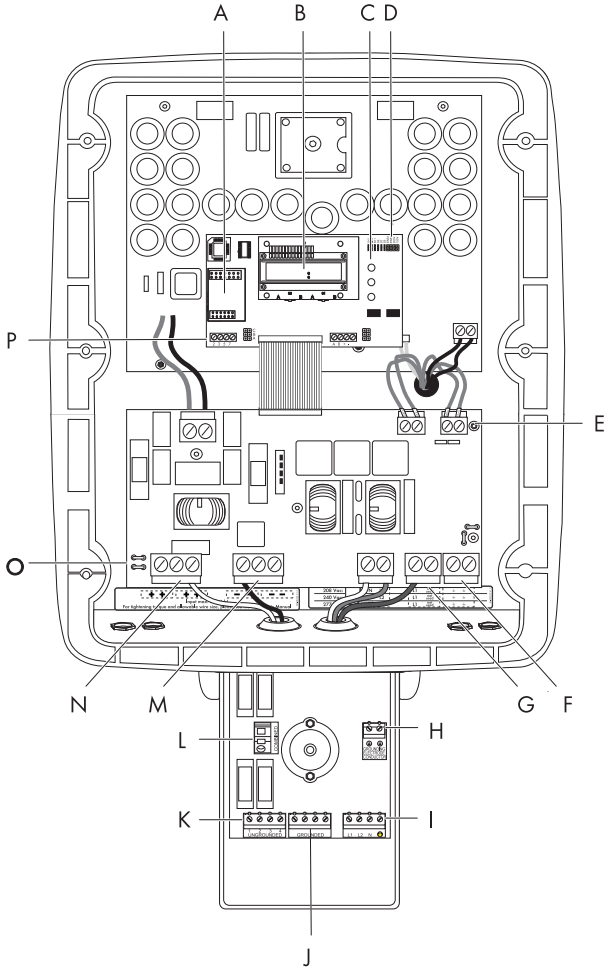

Position	Description
A	Sockets for optional communication Piggy-Back (RS485 or wireless)
B	Display
C	Status LEDs
D	Voltage Configuration Jumpers
E	Voltage Configuration Terminal Blocks

Position	Description
F	Ground Terminal (PE)
G	Output AC Line Terminals (N, L1 and L2)
H	PV Grounding + DC Grounding electrode conductor
I	Output AC Line Terminals (L1, L2, N and PE)
J	PV GROUNDED Terminal (input from PV array)
K	PV UNGROUNDED Terminal (input from PV array)
L	Combined UNGROUNDED Terminal
M	DC– Terminal (input from PV array)
N	DC+ Terminal (input from PV array)
O	Flat connection for grounding the cable shield for communication
P	Terminal for optional communication (RS485)

4.3 Configuring the AC voltage

The Sunny Boy 8000-US may not be connected to a 208 V grid.

The Sunny Boy may be easily configured for the different grid types commonly found in the U.S. The Sunny Boy is compatible with:

- 208 V AC output (except for Sunny Boy 8000-US)
- 240 V AC output
- 277 V AC output

The Sunny Boy comes from the factory pre-configured for utility interconnection at 240 V AC. The Sunny Boy may be reconfigured for other voltages by following the steps below and referring to Figure to the right.

There are four wires coming into the main cabinet through a grommet. Each wire is labeled with its corresponding voltage and is connected to one of the two large terminal blocks located just below the grommet. Refer to the Figure on the right and follow the instructions below:

1. The input voltage setting is determined by the jumper that is connected to the left terminal block (A). The Sunny Boy comes from the factory configured for connection to a 240 V system. If the system is 240 V, no adjustment is necessary.

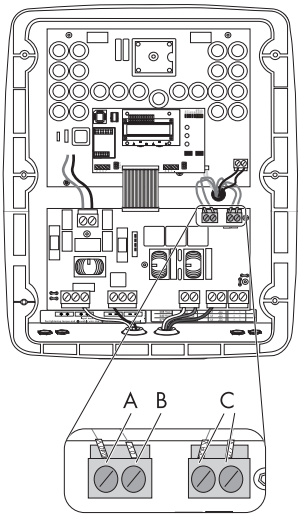

2. If adjustment is necessary, choose the wire with the correct voltage for your application from the right terminal block (C) and connect it to the left side of the left terminal block. Tighten all wires on the left terminal block.

   Torques for left AC configuration terminal block:

Grey Terminal Blocks (Weidmüller)	10 - 6 AWG: 18 in-lbs. (2 Nm)
Green Terminal Blocks (Phoenix)	8 - 6 AWG: 40 in-lbs. (4.5 Nm)
	10 AWG: 22 in-lb (2.5 Nm)

3. Do not remove the wire in the left terminal block labeled 0 V (B). It remains connected to the right side of the left terminal block in all configurations.
4. All unused wires connect to the right terminal block (C) and tighten them. Torques for right AC configuration terminal block (unused wires):

Grey Terminal Blocks (Weidmüller)	11 in-lbs. (1.2 Nm)
Green Terminal Blocks (Phoenix)	15 in-lbs. (1.7 Nm)

If the Sunny Boy is configured for the incorrect transformer voltage, (e.g. the inverter is configured for 240 V and then connected to a 208 V grid), the Sunny Boy will display the following error message:

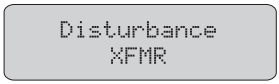

If this error message is encountered, recheck the input voltage configuration and confirm that it is set properly.

Automatic grid voltage detection

The Sunny Boy's software is designed to automatically detect which grid voltage it is feeding. Depending upon the voltage and phase angle between L1-N and L2-N, the inverter will determine if it is connected to a 208 V, 240 V or 277 V grid. If the Sunny Boy is configured for the incorrect transformer voltage, (e.g. the inverter is configured for 240 V and then connected to a 208 V grid), the Sunny Boy will display an error message.

The table below lists the voltage and frequency limits for the AC connection.

Voltage Range for 208 V nominal, line to line (except for Sunny Boy 8000-US)	183 V ... 229 V
Voltage Range for 240 V nominal, line to line	211 V ... 264 V
Voltage Range for 277 V nominal, line to neutral	244 V ... 305 V
Frequency Range	59.3 Hz ... 60.5 Hz

If the utility system has a neutral, the local Authority Having Jurisdiction (AHJ) may require that the neutral be connected to the inverter. Follow the procedure in 4.4 "Utility configuration jumpers" (page 23) to set the configuration jumpers and chapter 6.4.2 "AC wiring without SMA DC Disconnect" (page 45) to connect a neutral conductor to the Sunny Boy.

Common utility voltage configurations

The figure on the next page illustrates commonly used transformer types. Remember, when connecting the Sunny Boy to the utility, the phase relationship is not important, but the voltage must be compatible.

480 Delta: 277 WYE

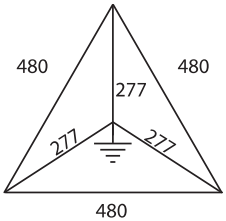

208 Delta: 120 WYE *

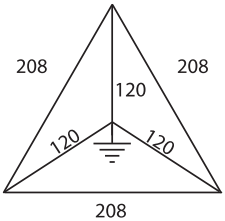

240: 120 Split Phase

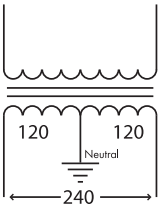

240 Delta: 120 Stinger

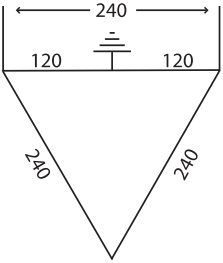

240 Delta

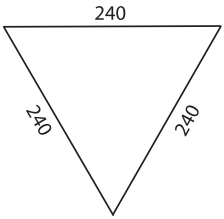

208 Delta *

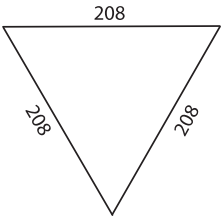

480 Delta
DO NOT USE!

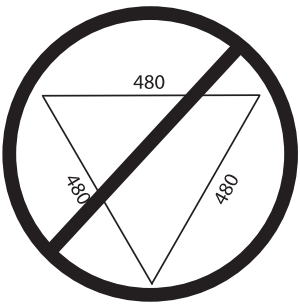

240 Delta:
Corner grounded

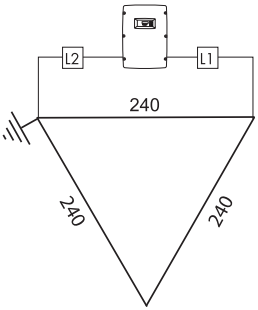

208 Delta:
Corner grounded *

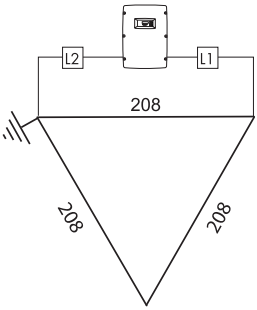

*The Sunny Boy 8000-US must not be connected to a 208 V grid.

When using 240 V delta corner grounded, or 208 V Delta corner grounded grids connect the L2 terminal to the grounded corner.

4.4 Utility configuration jumpers

The utility configuration jumpers allow the Sunny Boy to be connected to transformers where the neutral is not present, such as the 208 V and 240 V Delta, shown in Figure "Common utility voltage configurations" on page 21. The figure below shows an overview of default settings, settings for grids with no neutral, and fan test settings.

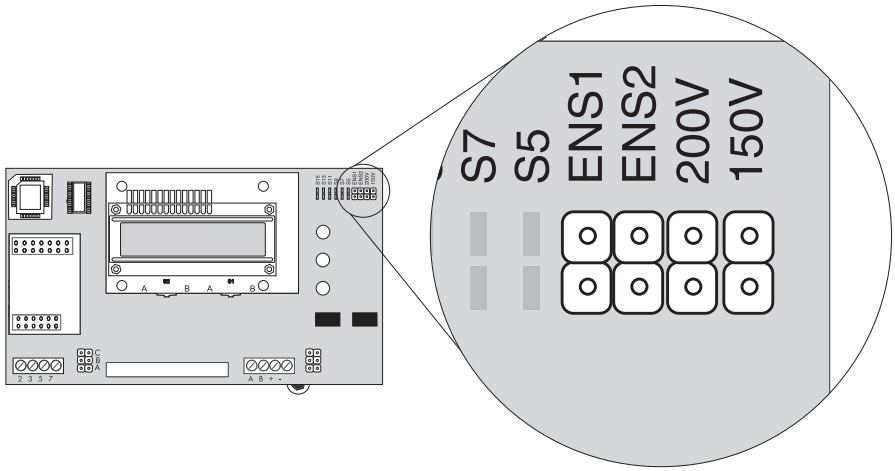

Default settings:
(use Input Voltage Wires)

208 V Delta, No Neutral or *
208 Delta corner Grounded *

240 V Delta, No Neutral or
240 Delta corner Grounded

Fan Test

* The Sunny Boy 8000-US must not be connected to a 208 V grid.

The figures below illustrate the proper jumper settings when connecting to a 240 V Delta: 120 V Stinger type transformer, or 240 V delta corner grounded transformer, respectively. Note the order in which inverters are connected to the phases.

Configuration jumper examples for 240 V delta: 120 V stinger

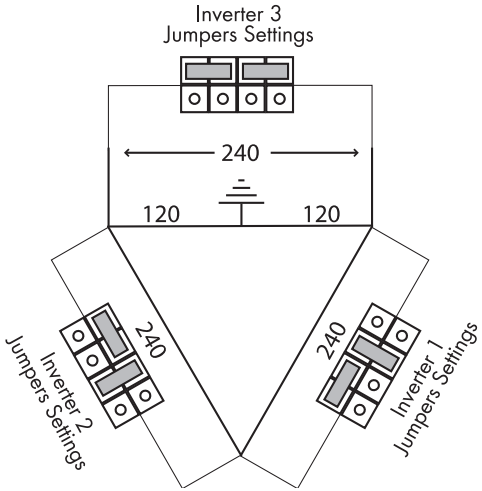

Configuration jumper examples for 240 V delta corner grounded

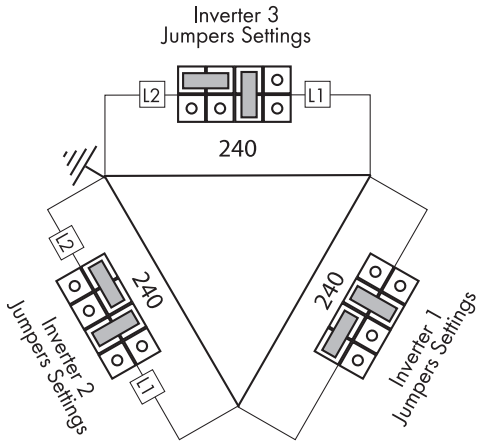

When using 240 V delta corner grounded, or 208 V delta corner grounded grids connect the L2 terminal to the grounded corner.

5 Mounting

5.1 Safety

DANGER

Danger to life due to fire or explosions.

There is always a certain risk with electric devices that a fire can occur, even though greatest attention was paid to avoiding this during the development.

Do not install the inverter:

- on flammable construction materials,
- in areas where highly flammable materials are stored,
- in potentially explosive areas.

WARNING

The Sunny Boy becomes hot during operation.

Burn injuries will occur when touching the enclosure.

- Mount the Sunny Boy in such a way that it cannot be touched inadvertently.

CAUTION

Falling of the Sunny Boy may cause injuries.

Crushing of body parts will result.

- Take the weight of the Sunny Boy of approximately 147 lbs. (67 kg) into account when mounting.

5.2 Selecting the mounting location

Observe the following conditions during installation:

- The installation method and mounting location must be suitable for the weight and dimensions of the Sunny Boy (see section 11 "Technical data" (page 90)).
- Take the dimensions of the DC Disconnect into account (Page 33).
- Mount on a solid surface.
- The mounting location must be accessible at all times.

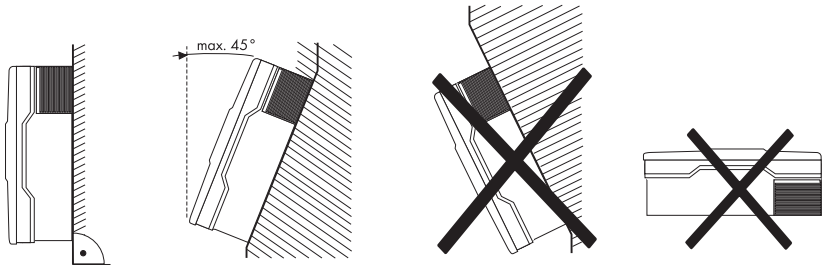

- Vertical installation or tilted backwards by max. 45°.
- The connection area must point downwards.
- Never install the device with a forward tilt.
- Do not install horizontally.
- Install at eye level to allow operating status to be read at all times.
- The ambient temperature must be below + 113 °F (+ 45 °C) to ensure optimal operation.
- Do not expose the Sunny Boy to direct sunlight, in order to avoid power reduction due to excessive heating.
- In a living area, do not mount the unit on plasterboard walls (or similar) in order to avoid audible vibrations.

  The Sunny Boy can emit noises when in use which can be regarded as a nuisance.

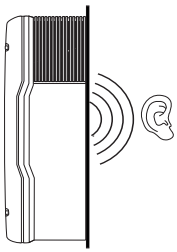

- Observe the minimum clearances to walls, other devices or objects as shown in the diagram in order to guarantee sufficient heat dissipation.

Multiple Sunny Boy units installed in areas with high ambient temperatures

The individual Sunny Boy units must be far enough apart to ensure that the individual Sunny Boy units do not take in the cooling air of the neighboring unit.

If necessary, increase the clearances and make sure there is enough ventilation to ensure sufficient cooling of the Sunny Boy units.

The *National Electrical Code®* may require significantly larger working clearances (see *National Electrical Code®* section 110.26).

Position	Clearance
Above	12 in. (300 mm)
Below	36 in. (900 mm)
Left	12 in. (300 mm)
Right	12 in. (300 mm)
Front	2 in. (50 mm)

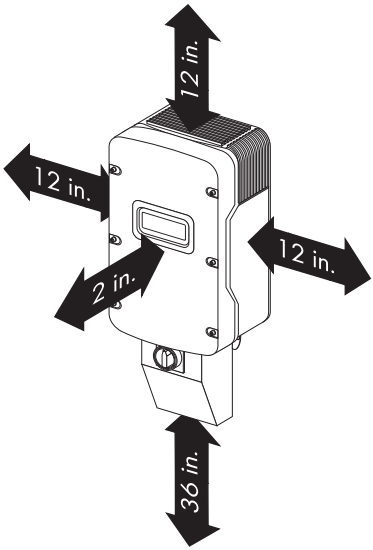

If the Sunny Boy is installed in an outdoor environment:
Observe a minimum clearance of 36 in. (900 mm) to the ground.

Dimensions of the Sunny Boy

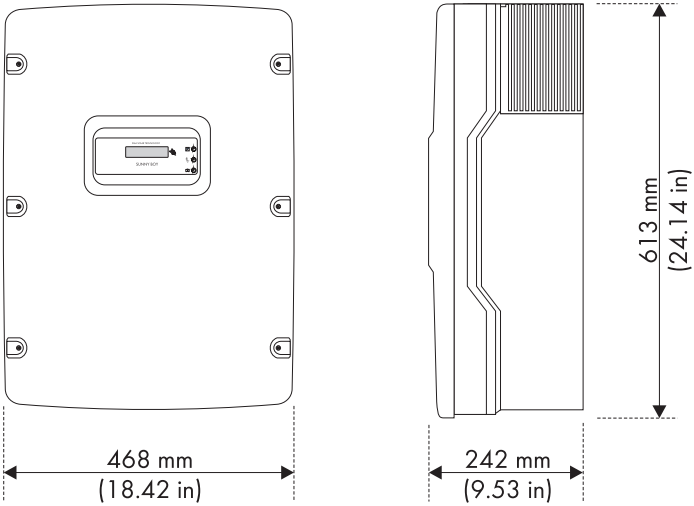

5.3 Mounting the Sunny Boy with the wall mounting bracket

The Sunny Boy is shipped with a T-shaped wall-mounting bracket that is suitable for use with most walls (see figures below). The horizontal part of the bracket has 12 holes. Use the 4 outermost holes of the wall-mounting bracket for mounting on wooden stud walls. Make sure that the wall you choose to mount the Sunny Boy on is sturdy enough to support its weight of 145 lbs. (67 kg) over a long period of time and that the wall is plumb. Be sure to use the appropriate type of mounting hardware for the wall material and ensure that the hardware is no smaller than ¼ in.

Dimensions of the wall mounting bracket

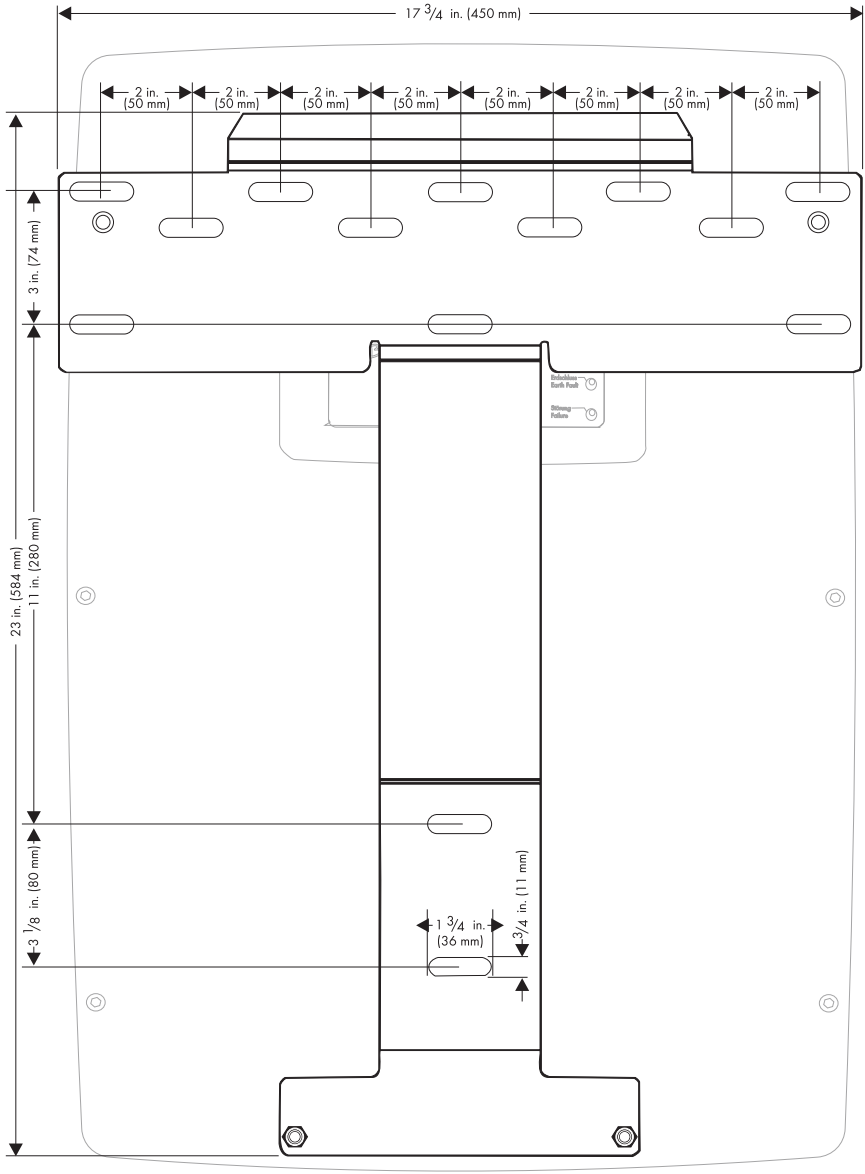

5.3.1 Possibilities for mounting the wall mounting bracket

Mounting on stone wall

Attach the wall mounting bracket with a minimum of 3 screws. The position of the screws on the wall mounting bracket is as follows:

- 1 screw on the upper left side.
- 1 screw on the upper right side.
- 1 screw below.

Mount the wall mounting bracket as described in section 5.3.2 "Mounting the wall mounting bracket" (page 31).

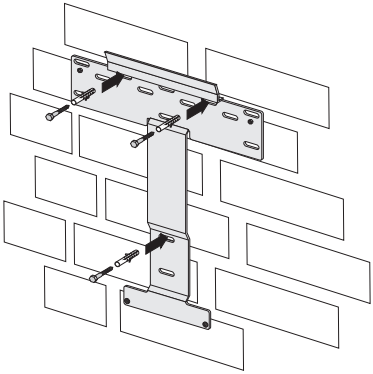

Mounting on a wooden wall with a stud or on a pillar

Attach the wall mounting bracket with 3 screws. The position of the screws on the wall mounting bracket is as follows:

- 2 screws on the upper middle.
- 1 screw below.

Mount the wall mounting bracket as described in section 5.3.2 "Mounting the wall mounting bracket" (page 31).

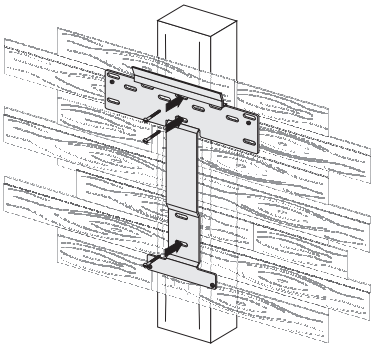

Mounting on a wooden wall with two studs

Attach the wall mounting bracket with 4 screws. The position of the screws on the wall mounting bracket is as follows:

- 2 screws on the upper left side.
- 2 screws on the upper right side.

Use the four external mounting screws on the left and right sides of the wall mounting bracket.

Mount the wall mounting bracket as described in section 5.3.2 "Mounting the wall mounting bracket" (page 31).

Use the following procedure to mount the wall-mounting bracket:

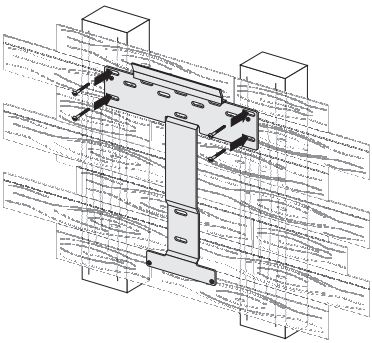

5.3.2 Mounting the wall mounting bracket

1. Position the wall-mounting bracket against the wall where you intend to mount the Sunny Boy. Try to mount the Sunny Boy with the display at eye-level.
2. Place a level on the top edge of the bracket. Adjust the position until it is leveled. The bottom of the bracket will be the approximate location of the bottom of the inverter.

DANGER

Risk of electric shock by drilling into power cables.

Death or serious injuries will result.

- Before drilling, check installation location for power cables.

CAUTION

Falling of the Sunny Boy may cause injuries.

Crushing of body parts will result.

- Ensure that there are studs in the wall where you intend to drill holes.

3. Use the wall-mounting bracket as a template. Mark the wall through at least three holes in horizontal or vertical position of the bracket (see chapter 5.3.1 "Possibilities for mounting the wall mounting bracket" (page 30)).
4. Remove the bracket and drill holes at the marks.
5. Insert wall anchors into the drill holes.

CAUTION

Falling of the Sunny Boy may cause injuries.

Crushing of body parts will result.

- Do not use molly or toggle bolts to mount the Sunny Boy to sheet rock or panelling.

Tip for installing

The diameter of the holes you drill must match the hardware you are using to mount the Sunny Boy.

For example, if you are mounting the Sunny Boy to a concrete wall, the hole diameter should be approximately the same as the outside diameter of the concrete anchors you intend to use. If you are mounting the Sunny Boy on a wall that has wooden studs inside it, the hole diameter must be the correct size for the lag screws you intend to use to mount the bracket. It is recommended that the lag screws be made of stainless steel, and the diameter of the screws closely match the diameter of the holes in the wall-mounting bracket. Make sure that the screws are long enough to penetrate the wall to a depth of 1.5 in.

6. Insert the screws through the holes in the wall mounting bracket and into the drill holes.
7. Tighten the screws clockwise until the bracket is held firmly against the wall. Do not overtighten the screws.

☑ The wall mounting bracket is mounted.

5.3.3 Mounting the SMA DC Disconnect

Dimensions for the DC Disconnect

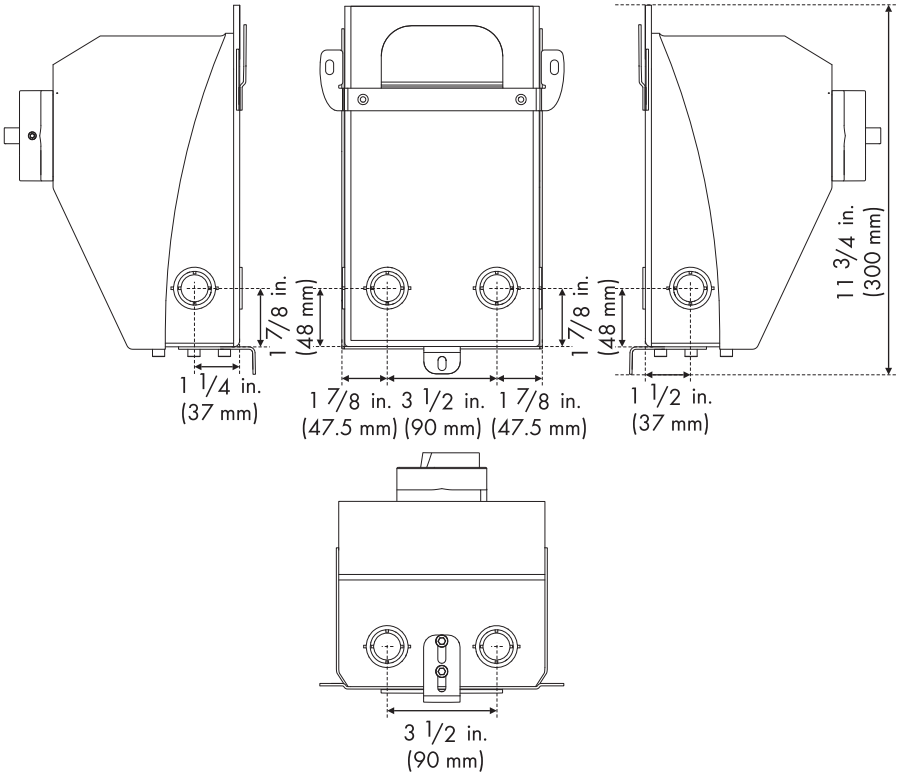

Attach the SMA DC Disconnect to the two lower holes of the wall-mounting bracket, using two screws and washers provided.

1. Place the screws and the washers in the holes in the fastening tabs on the DC Disconnect. The teeth on the washers must lie against the fastening tabs of the DC Disconnect.
2. Place the SMA DC Disconnect against the wall mounting bracket.
3. Tighten the screws with 44 in-lbs (5 Nm) torque.

☑ The SMA DC Disconnect is mounted.

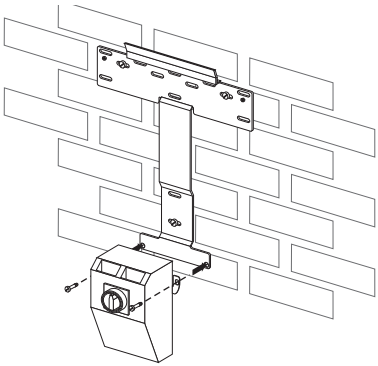

5.3.4 Mounting the Sunny Boy onto the wall mounting bracket

CAUTION

Falling of the Sunny Boy may cause injuries. Crushing of body parts will resullt.

- Take the weight of the Sunny Boy into account when mounting.

1. Remove the handle covers on the right and left side of the Sunny Boy.

   Transport the Sunny Boy between two persons, using the side handles above and below.

   or

   Put a steel bar with a maximum diameter of $1\frac{1}{8}$ in (30 mm) through the enclosure opening above and transport it between two people.

2. Hook the Sunny Boy using the enclosure opening in the back plate into the wall bracket.
3. Inspect the Sunny Boy from both sides to ensure that it sits centered on the wall bracket.

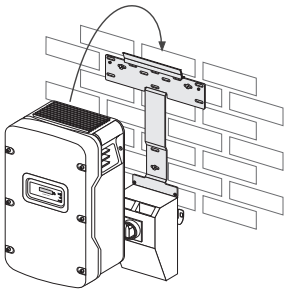

4. Screw the Sunny Boy onto the wall mounting bracket on both sides using the screws provided.
5. Tighten the screws clockwise with a torque of 44 in-lbs. (5 Nm).
6. Check that the unit is securely in place.

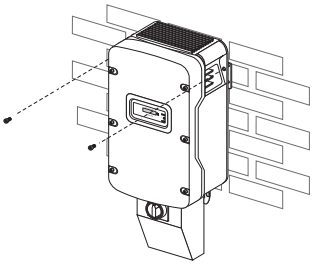

7. Put the handle covers over the handles.

   The air grills are marked "rechts/right" and "links/left" on the interior for proper assignment.

   The air grills prevent dirt and insects from entering the device and if necessary, can be reordered from SMA 12 ”Accessories” (page 102).

☑ The Sunny Boy is mounted.

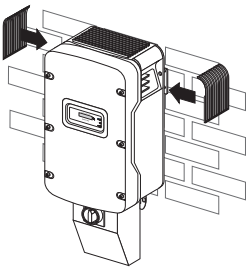

6 Electrical connection

DANGER

High voltages are present on the AC and DC cables.

Death or serious injuries due to touching the voltage-conducting cables.

- Always wait a minimum of 5 minutes for stored potentials in the Sunny Boy to discharge completely before opening the enclosure.
- Always connect the wires to the Sunny Boy in the following sequence.

NOTICE

Ingress of water when mounting and installing the Sunny Boy.

Damage to the Sunny Boy.

- Do not open the Sunny Boy when it is raining or when high humidity is present (> 95 %).

NOTICE

Touching the components can result in electrostatic discharges.

Damage to components.

- Ground yourself before touching a component.

NOTICE

Ground faults, unreliable and resistive connections due to faulty wire nuts.

- Avoid using wire nuts to join any wires together or to make any connections anywhere in the PV system.

Electrical installations

All electrical installations must be done in accordance with all local electrical codes and the *National Electrical Code®*, ANSI/NFPA 70. For installation in Canada the installations must be done in accordance with applicable Canadian standards.

Before connecting the Sunny Boy to the electrical utility grid, contact the local utility company. This connection must be made only by qualified personnel.

For inverters provided with a fixed AC output:

The AC input and AC output circuits are isolated from the enclosure and system grounding, if required by section 250 of the *National Electrical Code®*, ANSI/NFPA 70, is the responsibility of the installer.

The Photovoltaic System Grounding shall be installed per the requirements of sections 690.41 through 690.47 of the National Electric Code, ANSI/NFPA 70, and is the responsibility of the installer.

AC grounding

The Sunny Boy must be connected to the AC ground from the utility via the Ground terminal (PE) (see section 4.2 "Locating internal components" (page 19)).

PV grounding

The frame of the PV array frame-grounding must be connected to the PV Grounding and DC Grounding Electrode Conductor (see section 4.2 "Locating internal components" (page 19)). The size for the conductor is usually based on the size of the largest conductor in the DC system.

DC grounding electrode conductor

A DC grounding electrode conductor may be required by the Authority Having Jurisdiction (AHJ) Use the PV Grounding and DC Grounding Electrode Conductor (see section 4.2 "Locating internal components" (page 19)).

6.1 Connection area of the Sunny Boy

The DC input from the PV array (via the DC disconnect enclosure) and the output to the AC utility grid connect to the inverter inside the Sunny Boy case. The internal AC and DC wiring terminals accept a maximum wire size of 6 AWG. Knockouts are provided on the bottom of the Sunny Boy.

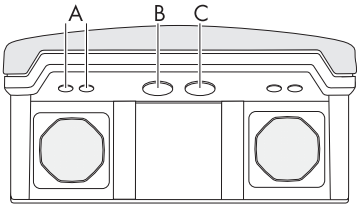

Position	Description
A	$^1/_2$ in. Communication cable glands with filler-plugs
B	$^3/_4$ in. DC knockout
C	$^1/_2$ in. AC knockout

NOTICE

Ingress of water due to enlarged enclosure openings.

Damage to the inverter will result.

- The AC and DC knockouts are sized for $^3/_4$ in. rigid conduits.
- Do not enlarge the knockout holes.

6.1.1 Wiring without SMA DC Disconnect

1. De-energize all energy sources by opening all AC and DC disconnects and/or breakers.
2. Wiring from AC breaker to the AC disconnect switch.
3. Wiring from the AC disconnect switch to the Sunny Boy, follow the procedure from section 5.5.2.
4. Wiring from the PV wires to the DC Disconnect.
5. Wiring from the DC disconnect to the Sunny Boy, follow the procedure from section 5.8.1.
6. Turn the DC switches and/or breakers on.
7. Turn the AC switches and/or breakers on.

Disconnecting the Sunny Boy

- First turn off all AC disconnects and then all DC disconnects.
- The AC side must always be disconnected before the DC side.
- After the Sunny Boy is de-energized, disconnect the wiring in the reverse order from above.

6.1.2 Wiring with SMA DC Disconnect

1. De-energize all energy sources by opening all AC and DC switch disconnects and/or breakers .
2. Wiring from the AC breaker to the SMA DC Disconnect, follow the procedure from section 5.5.3.
3. AC wiring from the SMA DC Disconnect to the Sunny Boy, follow the procedure from section 5.5.3.
4. Wiring from the PV array to the SMA DC Disconnect, follow the procedure from section 5.8.2.
5. DC wiring from the SMA DC Disconnect to the Sunny Boy, follow the procedure from section 5.8.2.
6. Switch the SMA DC Disconnect to position "1".
7. Turn on the AC breaker.

Disconnecting the Sunny Boy

- First turn off all AC disconnects and turn the SMA DC Disconnect to position "0".
- The AC side must always be disconnected before the DC side.
- After the Sunny Boy is de-energized, disconnect the wiring in the reverse order from above.

6.2 Opening the Sunny Boy

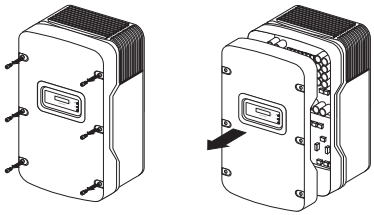

1. Remove the six screws from the lid and pull the lid forward smoothly.
2. Put the lid, the screws and the washers to one side so that they do not get lost.

6.3 Opening the SMA DC Disconnect

1. Turn the SMA DC Disconnect off by turning the switch to "0".

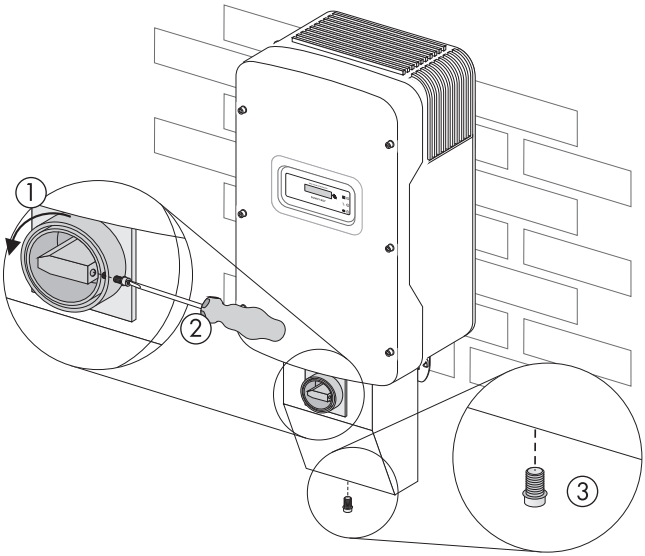

2. Loosen screw in the right area of the SMA DC Disconnect with a small phillips screwdriver (used screw: UNC no 5 x $^{3}/_{4}$ in., cross recess Phillips pan head machine screw).

   Do not remove the screw.

   - Check if you can remove the knob of the SMA DC Disconnect.
   - If not, unscrew the screw further until you can remove the knob.

   The screw is attached with a rubber washer in order to make the assembly easier.

3. Remove the screw and the washer from the bottom side of the SMA DC Disconnect, which fastens the cover.
4. Pull off the switch handle.
5. Remove the cover of the SMA DC Disconnect by pulling it down and moving it at the same time carefully forward at its lower edge.

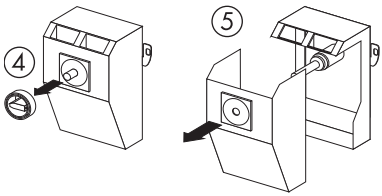

6.4 AC wiring

This section provides complete, step-by-step procedures for wiring the AC output from the Sunny Boy to the utility grid.

NOTICE

Danger of fire

Overvoltage may cause cable fire.

- Overcurrent protection for the AC output circuit must be provided in the electrical installation.
- Refer to the *National Electrical Code®*, ANSI/NFPA 70.
- The size of the overcurrent protection must be 50 A.

All electrical installations must be done in accordance with the local electrical codes and with the *National Electrical Code®* (NE, ANSI/NFPA 70).

See *National Electrical Code®* section 690-64(b)(2).

6.4.1 AC connection requirements

Use maximum 6 AWG, +194 °F (+90 °C) rated copper wire for all AC wiring connections to the Sunny Boy, although voltage drop and other considerations may dictate that larger size wires be used. Use only solid or stranded wire but not fine stranded wire.

The following diagrams show the potential losses in AC wires with respect to the cross-sectional area of the cable and the length of the cable. Use the following diagrams to determine the best wire size to use for your particular installation.

Sunny Boy 5000-US

Percent voltage drop for 208 V AC and 240 V AC service

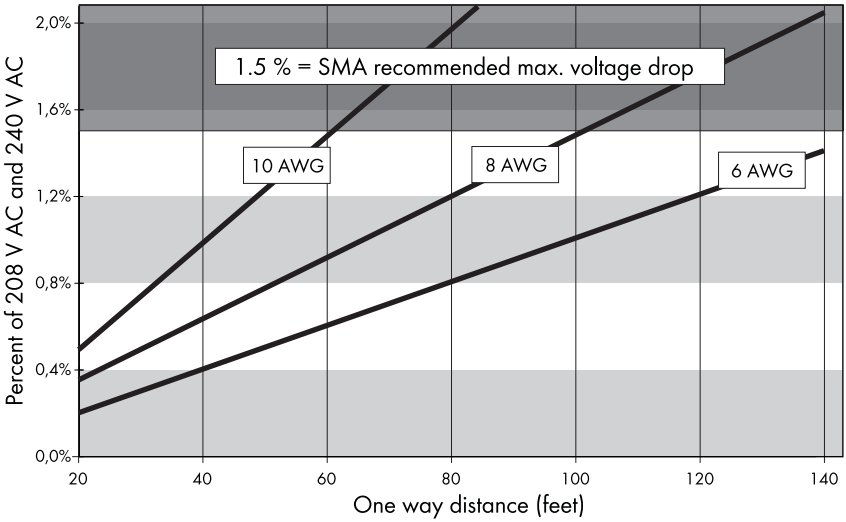

Percent voltage drop for 277 V AC service

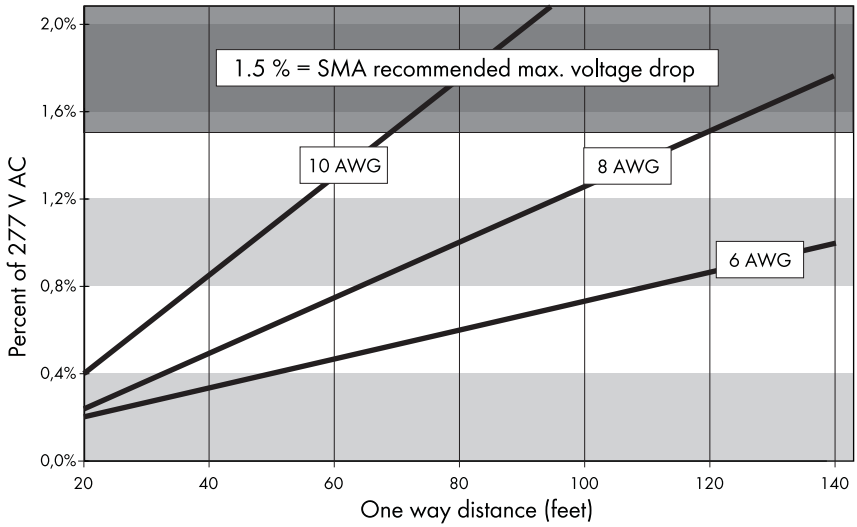

Sunny Boy 6000-US

Percent voltage drop for 208 V AC and 240 V AC service

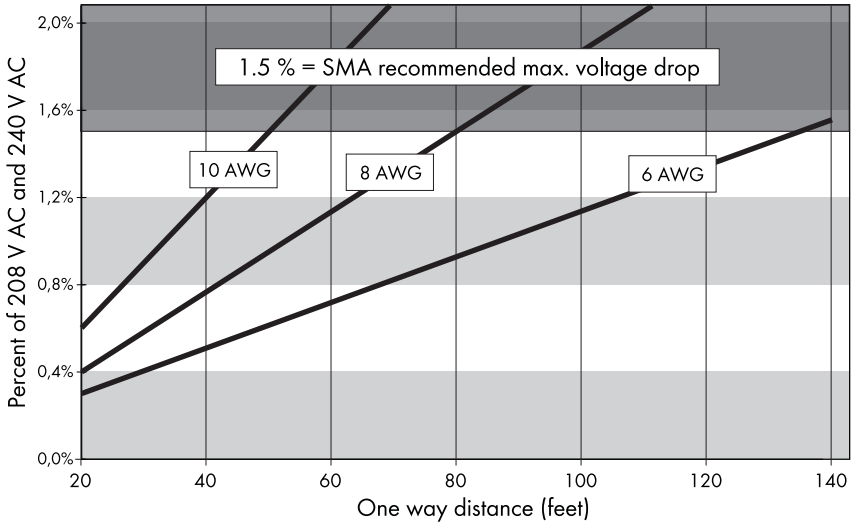

Percent voltage drop for 277 V AC service

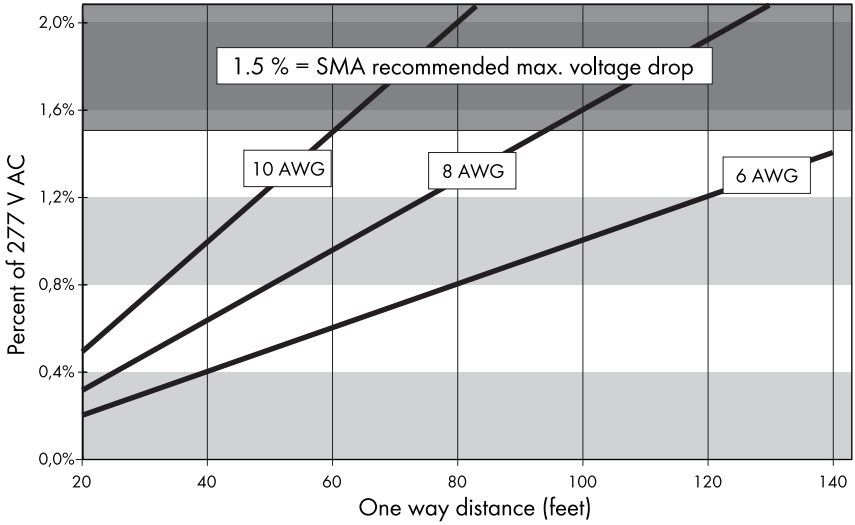

Sunny Boy 7000-US

Percent voltage drop for 208 V AC and 240 V AC service

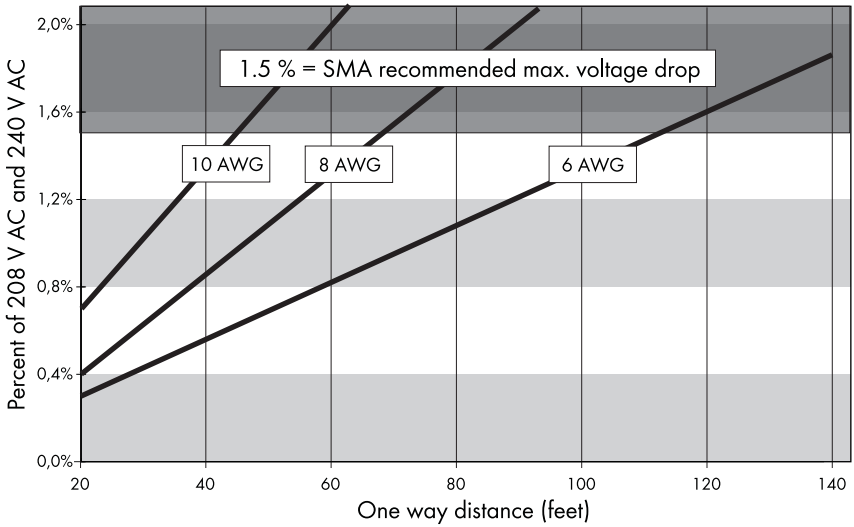

Percent voltage drop for 277 V AC service

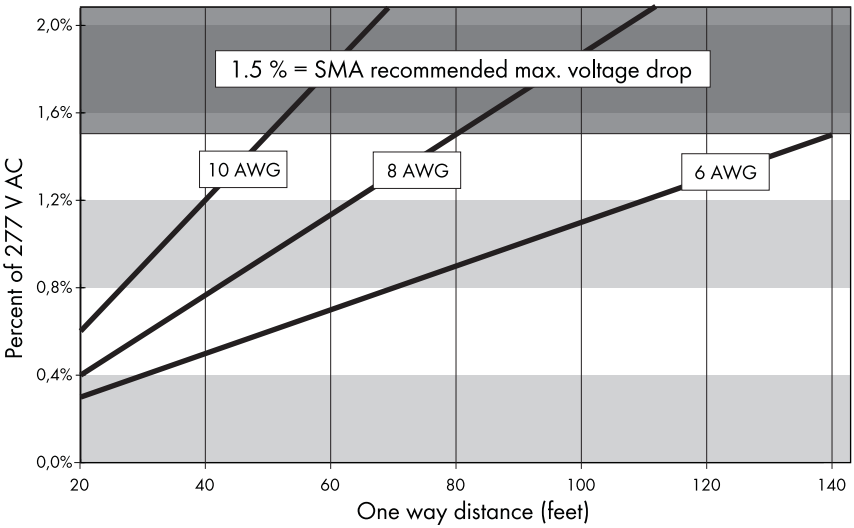

Sunny Boy 8000-US

Percent voltage drop for 240 V AC service

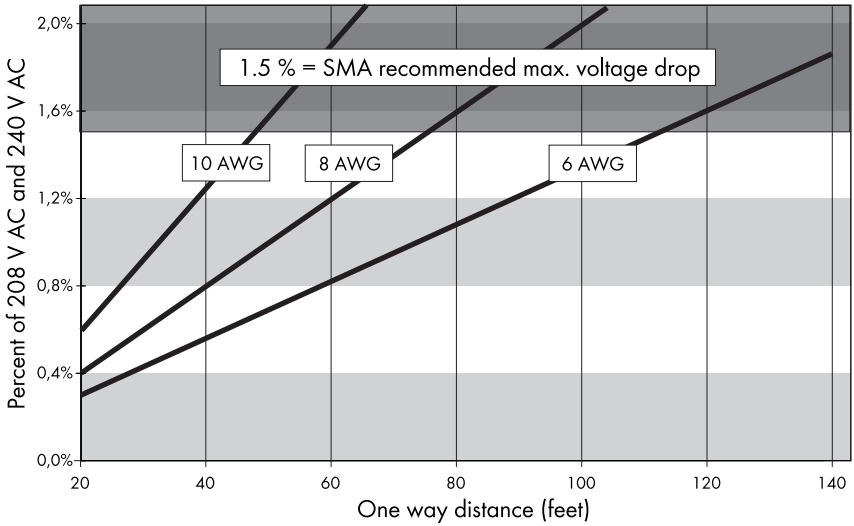

Percent voltage drop for 277 V AC service

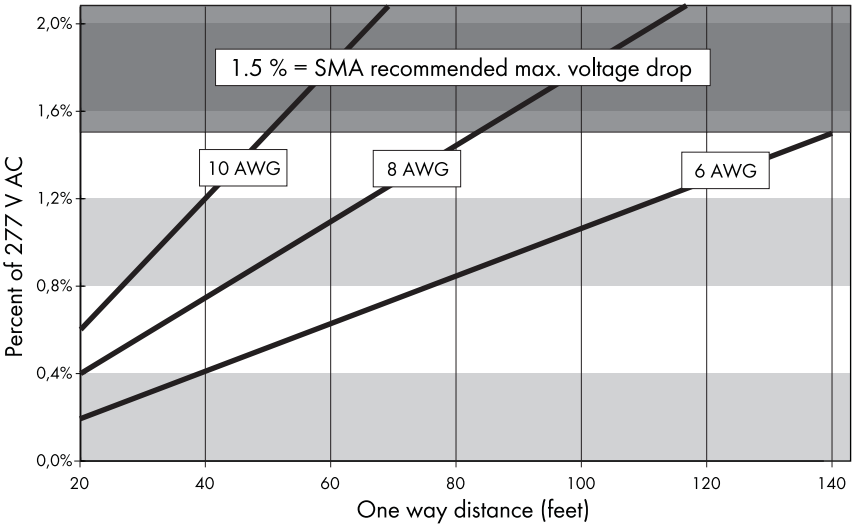

6.4.2 AC wiring without SMA DC Disconnect

1. Turn OFF the main breaker in the main utility breaker box.
2. Remove interior breaker panel cover.
3. If you are replacing an existing inverter, disconnect the wires for the AC line you are working with in the breaker box.
4. Install a $^{3}/_{4}$ in. conduit fitting in the Sunny Boy AC wiring knockout (the knockout on the right side of the Sunny Boy, as shown in section 6.2 "Opening the Sunny Boy" (page 38)). Fasten the conduit fitting on the inside of the Sunny Boy with the appropriate locknut.
5. Install a $^{3}/_{4}$ in. conduit between the main breaker box and the Sunny Boy AC wiring knockout.
6. Pull the AC wires through the conduit from the interior of the breaker box to the interior of the Sunny Boy.
7. Refer to the figures section "AC connection terminals for 208 V (not for Sunny Boy 8000-US) and 240 V" (page 46) and "AC connection terminals for 277 V" (page 47).
8. Connect the AC equipment-ground wire to the PE terminal labeled ⏚ in the Sunny Boy.

i The Sunny Boy 8000-US may not be connected to a 208 V grid.

9. For 208 V/240 V/277 V connect the L1 (AC line 1 or UNGROUNDED) wire to the terminal labeled L1 in the Sunny Boy.
10. For 208 V/240 V connect the L2 (AC line 2) and N (AC line N) wire to the terminal labeled L2 and N in the Sunny Boy. For 277 V connect the N (AC line N) wire to the terminal labeled N in the Sunny Boy.

    Note: For 277 V the L2 terminal is not used.

i The terminal must be opened completely before inserting the cable.

11. Connect the wires to the terminal blocks in the Sunny Boy and tighten them. Torques for AC connection terminal blocks:

Grey Terminal Blocks (Weidmüller)	10 ... 6 AWG: 18 in-lbs. (2 Nm)
Green Terminal Blocks (Phoenix)	8 ... 6 AWG: 40 in-lbs. (4.5 Nm)
	10 AWG: 2 in-lbs. (2.5 Nm)

12. Verify that all connections are correctly wired and properly torqued. Pull on the cable in order to make sure that it is sufficiently fixed in the terminal.

AC connection terminals for 208 V (not for Sunny Boy 8000-US) and 240 V

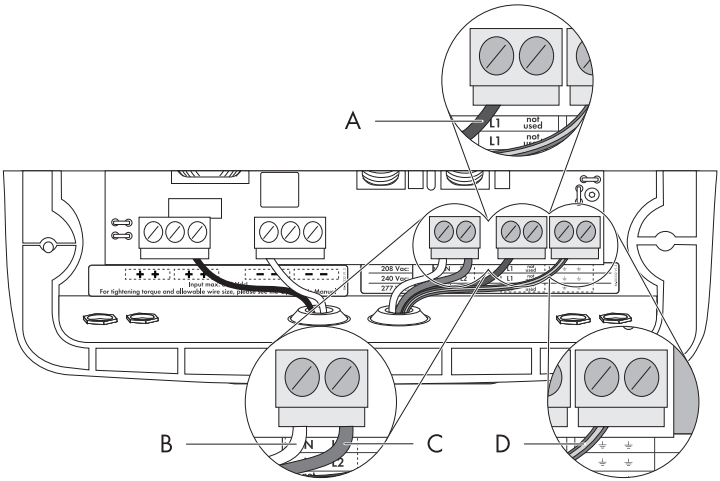

Position	Description
A	L1 wire connected to terminal L1
B	N wire connected to terminal N
C	L2 wire connected to terminal L2
D	Equipment ground wire connected to terminal PE

AC connection terminals for 277 V

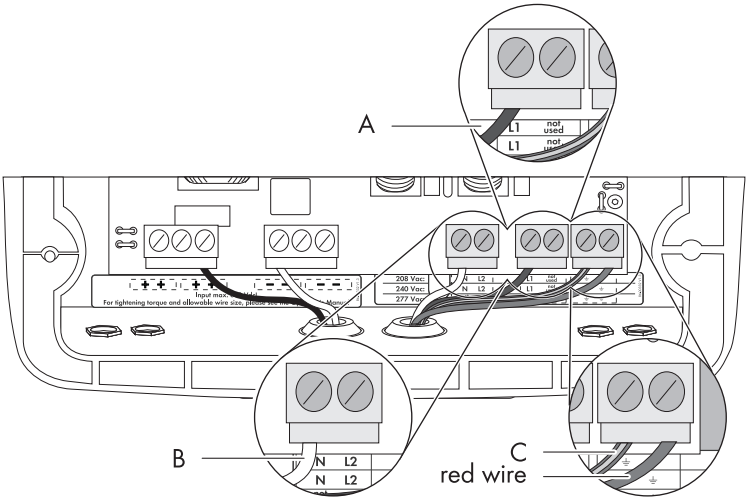

Position	Description
A	L1 wire connected to terminal L1
B	N wire connected to terminal L2
C	Equipment ground wire connected to terminal PE

6.4.3 AC wiring with SMA DC Disconnect

Connecting the AC cable in the DC Disconnect

1. Turn off the main breaker in the main utility breaker box.
2. Remove interior breaker panel cover.
3. If you are replacing an existing inverter, disconnect the wires for the AC line you are working with in the breaker box.
4. Install a $^{3}/_{4}$ in. conduit fitting in the SMA DC Disconnect AC wiring knockout (the knockout on the right side of the SMA DC Disconnect). Fasten the conduit fitting on the inside of the SMA DC Disconnect with the appropriate locknut.
5. Install $^{3}/_{4}$ in. conduit between the main breaker box and the SMA DC Disconnect's AC wiring knockout.
6. Pull the AC wires through the conduit from the interior of the breaker box to the interior of the SMA DC Disconnect.

The terminal must be opened completely before you insert the cable.

7. Connect the AC equipment-ground wire to the PE terminal labeled ⏚ in the SMA DC Disconnect.

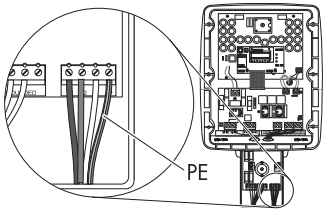

8. For 208 V/240 V/277 V connect the L1 (AC line 1 or UNGROUNDED) wire to the terminal labeled L1 in the SMA DC Disconnect.

   The Sunny Boy 8000-US must not be connected to a 208 V grid.

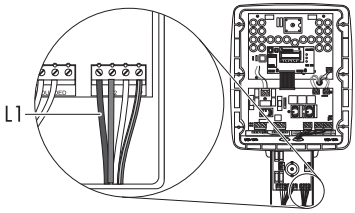

9. For 208 V/240 V connect the L2 (AC line 2) and N (AC line N) wire to the terminal labeled L2 and N in the SMA DC Disconnect.

   The Sunny Boy 8000-US must not be connected to a 208 V grid.

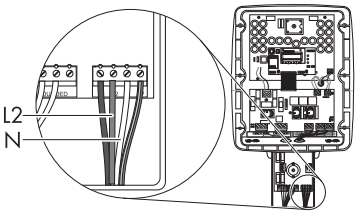

   For 277 V connect the N (AC line N) wire to the terminal labeled N in the SMA DC Disconnect.

   Note: For 277 V the L2 terminal is not used.

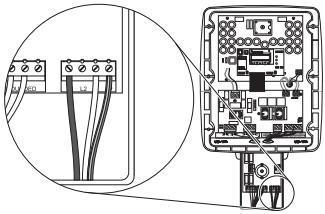

10. Connect the wires to the terminal blocks in the SMA DC Disconnect and tighten to a torque of 15 in-lbs. (1.7 Nm).
11. Verify that all connections are correctly wired and properly torqued. Pull on the cable in order to make sure that it is sufficiently fixed in the terminal.

Connecting the AC cable in the Sunny Boy

12. Use a screwdriver in order to poke a hole in the groove of the grommet inside the inverter.

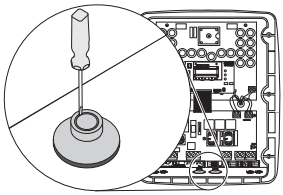

13. Remove the membrane.

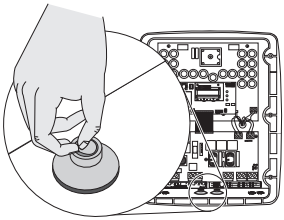

14. Pull the cable into the Sunny Boy.

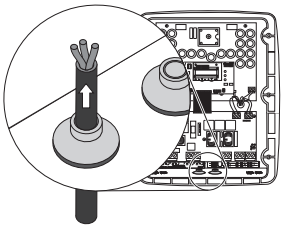

15. Pull the cable slightly back in order to seal the grommet.

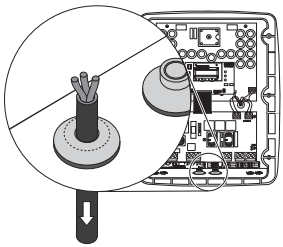

16. Connect the green/yellow cable of the Sunny Boy to the terminal labeled: ⏚

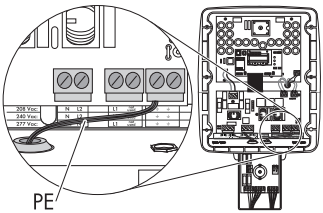

17. Connect the white wire of the SMA DC Disconnect to the terminal labeled N and the black wire to the terminal labeled L1 of the Sunny Boy.

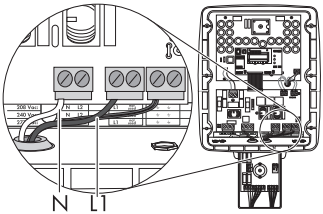

18. For 208 V/240 V connect the red wire to the terminal labeled L2 in the Sunny Boy.

    The Sunny Boy 8000-US must not be connected to a 208 V grid.

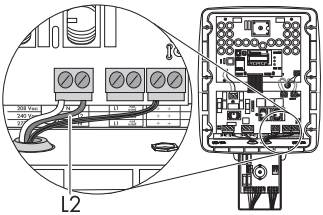

    For 277 V connect the red wire to the terminal labeled ⏚ in the Sunny Boy (not used).

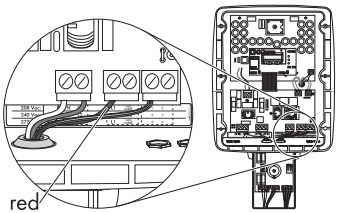

19. Connect the wires to the terminal blocks in the Sunny Boy and tighten them. Torques for AC connection terminal blocks:

Grey Terminal Blocks (Weidmüller)	10 ... 6 AWG: 18 in-lbs. (2 Nm)
Green Terminal Blocks (Phoenix)	8 ... 6 AWG: 40 in-lbs. (4.5 Nm)
	10 AWG: 22 in-lbs. (2.5 Nm)

20. Verify that all connections are correctly wired and properly torqued. Pull on the cable in order to make sure that it is sufficiently fixed in the terminal.

6.5 DC wiring

This subsection provides procedures for wiring the DC input from the PV array to the Sunny Boy.

DANGER

High voltage is present in PV modules exposed to light.

Death due to electric shock when touching a DC conductor.

- During installation, cover the PV modules with opaque material.

DANGER

High voltage is present inside the DC cables.

Death or serious injury will result when damaging a DC cable or touching a DC conductor.

- You have to connect the DC cables from the PV array to the Sunny Boy in the order described in this manual.

NOTICE

Damage to the inverter due to overvoltage.

- Verify that the DC current of your installation does not exceed the maximum values specified on the type rating label.

NOTICE

Irreversible damge to the inverter due to DC-input voltage that exceeds the maximum DC-input-voltage range.

- Verify the polarity and the open-circuit voltage from the PV strings, before connecting the DC wires to the inverter.
- Check both the polarity and the open-circuit voltage from the PV strings.
- Configure the DC-input-voltage range correctly before connecting the DC-input wires from the PV array to the inverter.
- Use the online SMA string size calculator at www.SMA-America.com to determine the correct string configuration.

Simplified electrical wiring diagram of a PV system

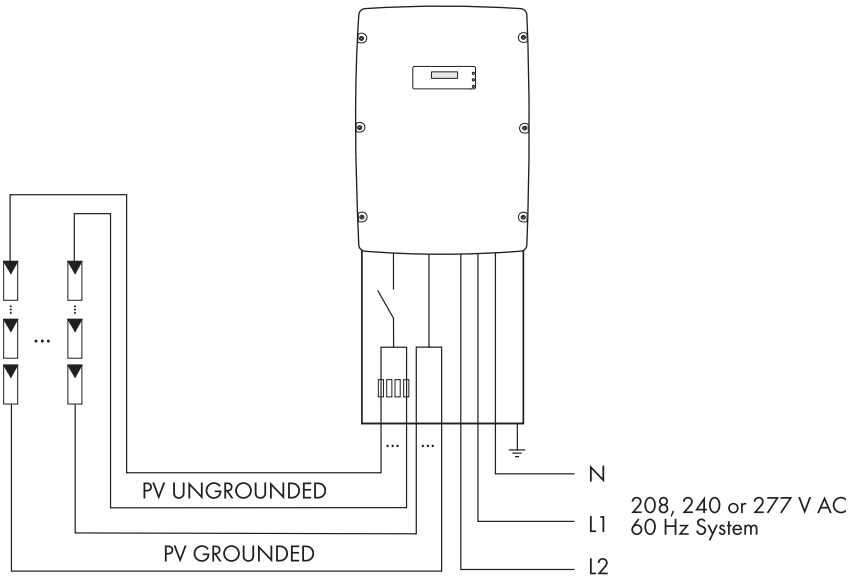

6.5.1 DC connection requirements

Cable sizing

All electrical installations must be done in accordance with all local electrical codes and with the *National Electrical Code®*, ANSI/NFPA 70. For installation in Canada the installations must be done in accordance with applicable Canadian standards.

When selecting the type and cross-section of the cable in accordance with the routing method, observe the following requirements:

- For all DC wiring connections use 10 ... 6 AWG (6 ... 16 mm²), +194 °F (+90 °C) rated copper wire.
- Use only solid or stranded wire but not fine stranded wire.

Use the free design programs "Solar Design Tools" at www.SMA-America.com to determine the correct string configuration.

Fusing

The DC disconnect for the inverter must have a minimum rating of 600 V DC and 36 A continuous.

The SMA DC disconnect is shipped with four 15 A, 600 V DC fuses (one for each string). The maximum fuse rating for the four SMA DC disconnect fuses is 20 A, 600 V DC (one for each string).

Series fusing may be required depending on the type of PV module used in the system. See *National Electrical Code®* 690.9.

6.5.2 DC input grounding

The Sunny Boy comes from the factory configured for negative ground systems. Certain types of PV modules may require that the positive terminal be grounded instead of the negative terminal. To configure the Sunny Boy for positive ground, move the fuse (1) and change the jumper position (2) as shown in the following illustrations.

GFDI fuse and jumper settings for negative ground

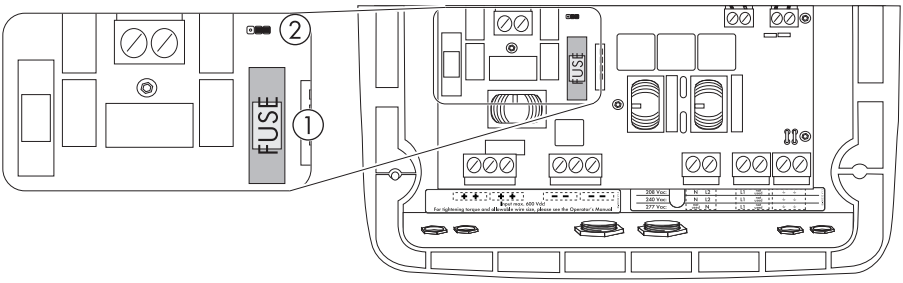

GFDI fuse and jumper settings for positive ground

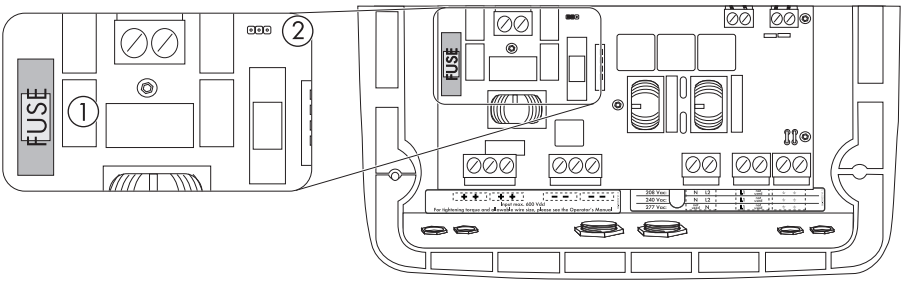

6.5.3 DC wiring without SMA DC Disconnect

Use the following procedure to connect the DC wires to the Sunny Boy without SMA DC Disconnect:

1. Verify that the AC breaker is OFF.
2. Verify that the DC disconnect is open in the external DC disconnect enclosure.
3. Install a $^{3}/_{4}$ in. conduit fitting in the Sunny Boy DC wiring knockout. The DC knockout is the left one of the two large openings in the center on the bottom of the Sunny Boy, as shown in chapter 6.2 "Opening the Sunny Boy" (page 38) and in the figure below. Fasten the conduit fitting on the inside of the Sunny Boy with the appropriate locknut.
4. Install $^{3}/_{4}$ in. conduit between the DC disconnect enclosure and the Sunny Boy DC wiring knockout.
5. Refer to the figure below for steps 6 through 8.

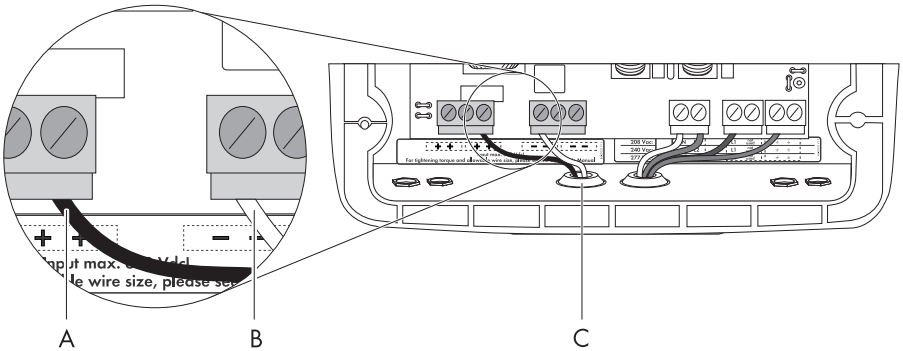

Position	Description
A	Positive DC wire connected to DC+
B	Negative DC wire connected to DC −
C	DC Knockout

6. Pull the DC wires from the DC disconnect through the conduit into the interior of the Sunny Boy.
7. Connect the positive DC wire to the terminal labeled DC+ in the Sunny Boy.
8. Connect the negative DC wire to the terminal labeled DC − in the Sunny Boy.

The Sunny Boy has provisions for up to three PV strings. The positive and negative terminal blocks each have three positions, so three pairs of DC-input wires can be connected in parallel.

The terminal must be opened completely before you insert the cable.

9. Connect the positive and negative DC wires to the appropriate terminals in the DC disconnect enclosure.

10. Connect the DC equipment ground wire to the PE terminal labeled ⏚ in the Sunny Boy.
11. Torque all wires in the AC and DC terminal blocks inside the Sunny Boy to:

Grey Terminal Blocks (Weidmüller)	10 ... 6 AWG: 18 in-lbs. (2 Nm)
Green Terminal Blocks (Phoenix)	8 ... 6 AWG: 40 in-lbs. (4.5 Nm)
	10 AWG: 22 in-lbs. (2.5 Nm)

12. Verify that all connections are correctly wired and properly torqued. Make a tension test.

6.5.4 DC wiring with SMA DC Disconnect

The terminal has to be fully opened before you insert the cabel into it.

Use the following procedure to connect the DC wires to the Sunny Boy with SMA DC Disconnect:

1. Verify that the AC breaker is OFF.
2. Install a $^3/_4$ in. conduit fitting in the SMA DC Disconnect's DC wiring knockout (the knockout on the left side of the SMA DC Disconnect). Fasten the conduit fitting on the inside of the SMA DC Disconnect with the appropriate locknut.
3. Install $^3/_4$ in. conduit between the SMA DC Disconnect and the PV array.
4. Pull the DC wires, the ground wires from the PV array and the grounding electrode wire through the conduit into the interior of the SMA DC Disconnect.

The SMA DC Disconnect has provisions for up to four PV strings. The PV UNGROUNDED and PV GROUNDED terminal block each has four positions, so four pairs of DC-input wires can be connected in parallel.

5. Connect the grounding electrode to the grounding electrode conductor terminal (B).
6. Connect the PV generator grounding to the grounding electrode conductor terminal (A).

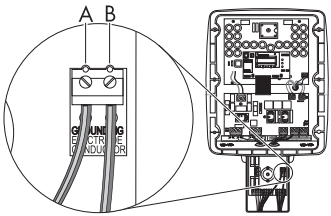

Negative grounding

To verify that your inverter is grounded as intended please refer to section 6.5.2 "DC input grounding" (page 53).

7. Connect the positive DC wires (A) to the terminal labeled PV UNGROUNDED in the SMA DC Disconnect.

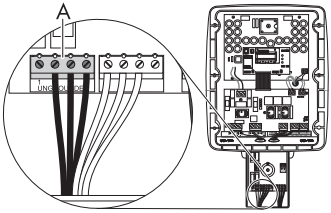

8. Connect the negative DC wires (A) to the terminal labeled PV GROUNDED in the SMA DC Disconnect.

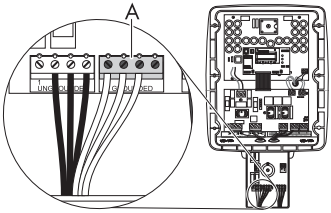

9. Torque all wires in the terminal blocks inside the SMA DC Disconnect to 15 in-lbs. (1.7 Nm).

10. Use a screwdriver in order to poke a hole in the groove of the grommet.

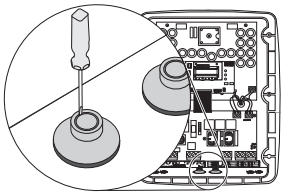

11. Remove the membrane.

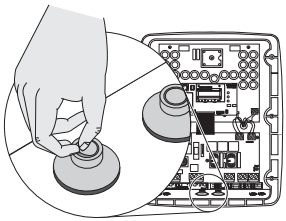

12. Pull the DC wires from the DC disconnect through the conduit into the interior of the Sunny Boy.

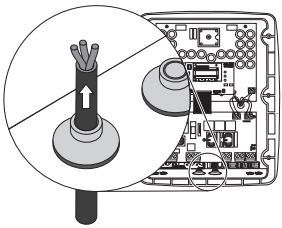

13. Pull the wires slightly back in order to seal the grommet.

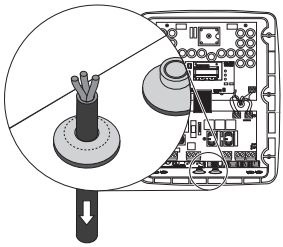

14. Connect the black wire (PV UNGROUNDED) to the terminal labeled DC+ in the Sunny Boy.

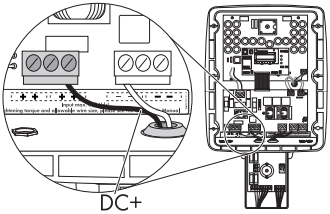

15. Connect the white wire (PV GROUNDED) to the terminal labeled DC − in the Sunny Boy.

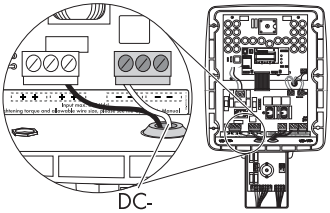

16. Torque all wires in the terminal blocks inside the Sunny Boy to:

Grey Terminal Blocks (Weidmüller)	10 ... 6 AWG: 18 in-lbs. (2 Nm)
Green Terminal Blocks (Phoenix)	8 ... 6 AWG: 40 in-lbs. (4.5 Nm)
	10 AWG: 22 in-lbs. (2.5 Nm)

17. Verify that all connections are correctly wired and properly torqued.
18. Make a tension test.

Positive grounding

To verify that your inverter is grounded as intended please refer to section 6.5.2 "DC input grounding" (page 53).

1. Connect the negative DC wires (A) to the terminal labeled PV UNGROUNDED in the SMA DC Disconnect.

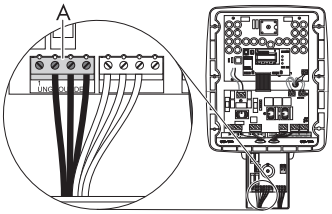

2. Connect the positive DC wires (A) to the terminal labeled PV GROUNDED in the SMA DC Disconnect.

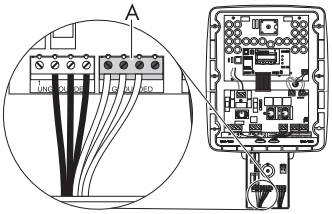

3. Torque all wires in the terminal blocks inside the SMA DC Disconnect to 15 in-lbs. (1.7 Nm).
4. Use a screwdriver in order to poke a hole in the groove of the grommet.

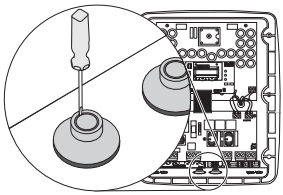

5. Remove the membrane.

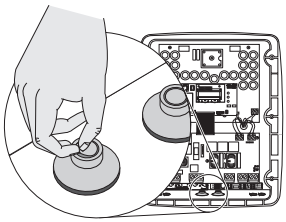

6. Pull the DC wires from the DC disconnect through the conduit into the interior of the Sunny Boy.

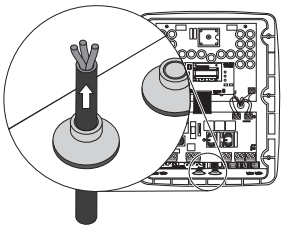

7. Pull the wires slightly back in order to seal the grommet.

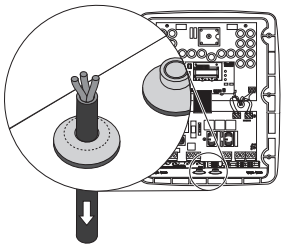

8. Connect the white wire (PV GROUNDED) to the terminal labeled DC+ in the Sunny Boy.

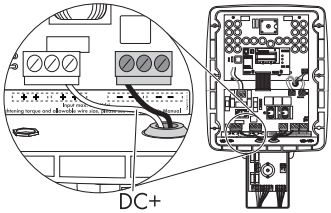

9. Connect the black wire (PV UNGROUNDED) to the terminal labeled DC- in the Sunny Boy.

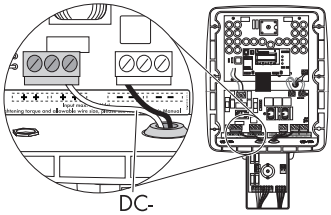

10. Torque all wires in the terminal blocks inside the Sunny Boy to:

Grey Terminal Blocks (Weidmüller)	10 ... 6 AWG: 18 in-lbs. (2 Nm)
Green Terminal Blocks (Phoenix)	8 ... 6 AWG: 40 in-lbs. (4.5 Nm)
	10 AWG: 22 in-lbs. (2.5 Nm)

11. Verify that all connections are correctly wired and properly torqued.

6.5.5 DC connection with additional DC distribution

If combining more than 1 string prior to the integrated DC Disconnect use the combined terminal on the ungrounded side.

Using spring terminal labeled combined

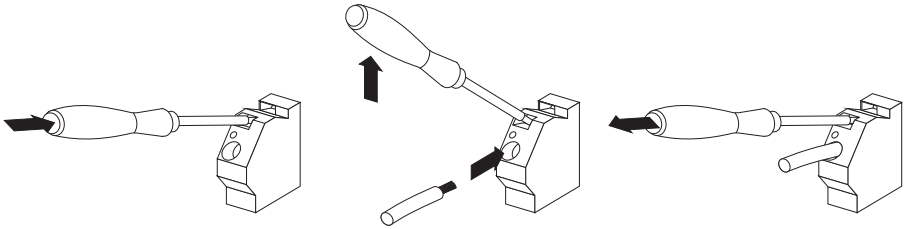

1. Insert the insulated screwdriver into the provided slot of the spring terminal.
2. Push the screwdriver up, the spring terminal is opened.
3. Insert the stripped cable into the spring terminal.
4. Return the screwdriver to its original position.
5. Remove the screwdriver. The spring terminal is closed and the cable is fastened.

DC connection with additional DC distribution, negative grounding

1. Connect the positive DC wire (A) to the terminal labeled COMBINED in the SMA DC Disconnect.

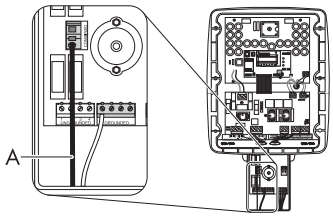

2. Connect the negative DC wire (B) to the terminal labeled PV GROUNDED in the SMA DC Disconnect.

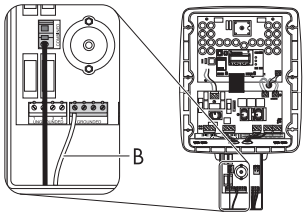

3. Torque all wires in the terminal blocks inside the SMA DC Disconnect to 15 in-lbs. (1.7 Nm).

DC connection with additional DC distribution, positive grounding

1. Connect the negative DC wire (A) to the terminal labeled COMBINED in the SMA DC Disconnect.

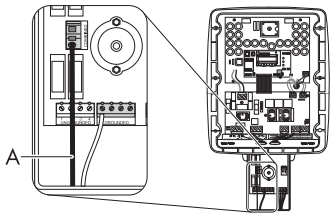

2. Connect the positive DC wire (B) to the terminal labeled PV GROUNDED in the SMA DC Disconnect.

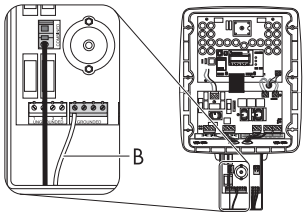

3. Torque all wires in the terminal blocks inside the SMA DC Disconnect to 15 in-lbs. (1.7 Nm).

6.6 Communication

The Sunny Boy can be retrofitted with a communication interface (socket see section 4.2 "Locating internal components" (page 19)) to communicate with special data acquisition devices (e.g. Sunny WebBox) or a PC with appropriate software (e.g. Sunny Data).

For a complete listing of all applicable communication options please refer to the SMA web page or the product catalogue.

See the communication interface documentation for a detailed wiring diagram and instructions for insertion.

6.7 Closing the Sunny Boy

NOTICE

Damage of the lid could result in an inadequate seal between the lid and the enclosure.

Ingress of humidity.

Damage to the Sunny Boy will result.

- Ensure no moisture is trapped inside the enclosure when mounting the lid.
- Handle the lid carefully.
- Do not misplace the screws and lock washers that attach the lid.

1. Check wire routing to ensure that no wires can interfere with proper sealing of the lid and that no pressure will be exerted on the connections when the lid is replaced.
2. Locate the six screws and lock washers you removed to take the lid off the Sunny Boy. Make sure you have all six screws and lock washers, as all of this hardware is necessary to ensure proper grounding and a weather-tight seal.
3. Check the seal on the inside of the lid to ensure it is undamaged and in the correct position.
4. Carefully position the lid on the front of the Sunny Boy so that the six holes in the lid are aligned correctly with the six threaded holes in the case.

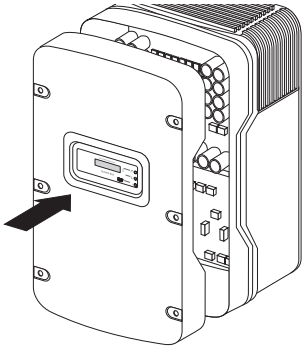

For proper grounding, the teeth of the washers must face towards the lid.

Do not cross-thread any of the screws.

Do not use power tools to start the screws.

5. While holding the lid in place, carefully insert the six screws with lock washers through the holes in the lid into the threaded holes in the case and turn them until they are finger-tight. Be careful not to cross-thread any of the screws. Do not use power tools to start the screws.
6. Verify that the lid is in the correct position and that the seal is in place between the case and the lid.
7. Tighten the lid screws to a torque of 53 in-lbs. (6 Nm).

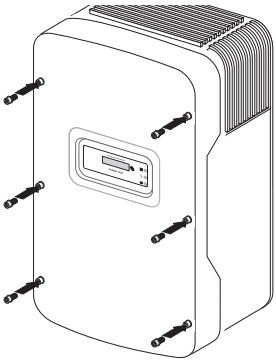

6.8 Closing the SMA DC Disconnect

1. Make sure the string fuses are securely mounted.

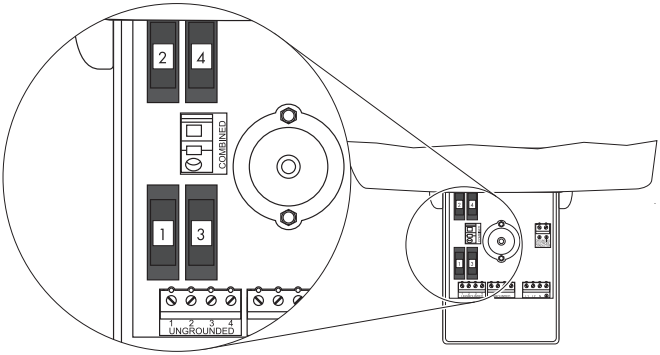

2. Position the cover onto the SMA DC Disconnect and insert the switch handle into the cover.
3. Turn the switch to the "0" position and tighten the screw on the right side of the switch with a small phillips screwdriver (used screw: UNC no 5 $^{3}/_{4}$ in., cross recess phillips pan head machine screw).

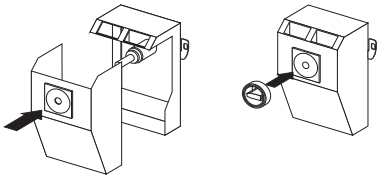

4. Install the screw and washer on the bottom side of the SMA DC Disconnect, to fasten the cover. The teeth of the washer must face toward the cover in order to ensure proper grounding. Tighten the screw to a torque of 44 in-lbs. (5 Nm).

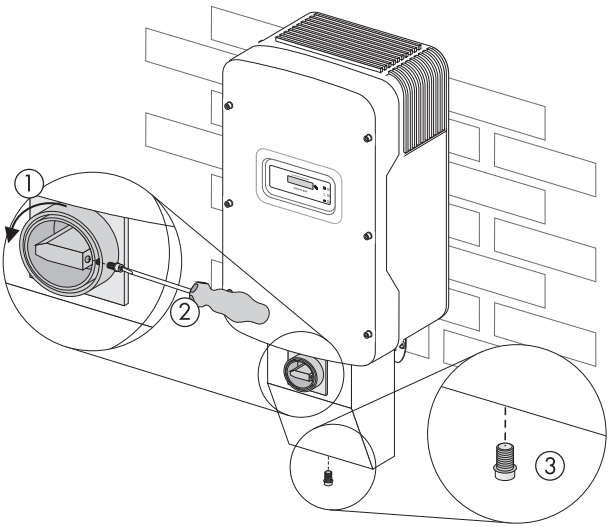

7 Commissioning

All Sunny Boy inverters have a sophisticated system for detecting and responding to PV array ground faults as required by *National Electrical Code®*, 690.5.

The PV array normally operates in a grounded configuration. Depending on the type of system, the negative or positive conductor of the array is connected to the grounding system inside the Sunny Boy. As required by UL1741, the GFDI protection is active whenever there is sufficient DC voltage to turn on the LCD in the Sunny Boy.

DANGER

Deviating from the procedure described in this chapter could expose you to lethal voltages.

Death or serious injury will result.

- Commission the Sunny Boy in the order described in the following procedure.
- Never insert the GFDI fuse into the Sunny Boy without the fuse holder.

1. Make sure any covering placed over the PV array is removed.
2. Connect the grid voltage to the Sunny Boy by switching on the main AC circuit breaker in the main utility panel.
3. Switch the external DC disconnect to position „on“.
   or
   Switch the SMA DC Disconnect to the “1“ position.
   If there is sufficient sunlight available, the Sunny Boy will enter the “Wait” mode at this time and the green LED will begin to blink.
4. If no AC fault is detected, the “Wait” mode will end after 10 seconds and the green LED will stop blinking, remain on and the Sunny Boy will begin to operate normally. If an AC fault was registered, the Sunny Boy will wait 5 minutes prior to starting.

If there is a ground fault in the array, the message “EarthCurrentMax” will be displayed and the GFDI fuse may clear.

- If this message is encountered, switch off the DC and AC disconnects to the inverter and troubleshoot the array.

The Sunny Boy will automatically begin to feed power to the utility grid if there is adequate solar irradiation and the resulting PV input voltage is greater than 300 V DC
(365 V DC for Sunny Boy 8000-US).

If the Sunny Boy is not operating as expected after commissioning has been completed, refer to section 8 ”Displays and messages” (page 65) and to Section 9 ”Troubleshooting” (page 80).

Anytime the AC power is disconnected from the inverter - either manually or as a result of an AC disturbance - the inverter will wait 5 minutes after the AC power has been restored to reconnect.

- When servicing the inverter, always disconnect the DC first, then the AC.

8 Displays and messages

The Sunny Boy LED status indicator

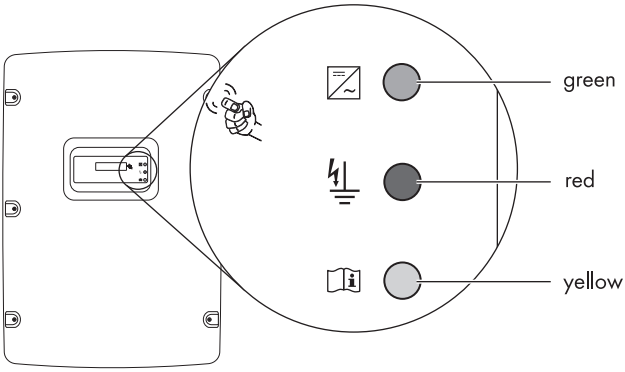

Each Sunny Boy inverter comes equipped with three LED status indicators. This allows you to determine the operating mode of the inverter at a glance.

The basic definitions of the indicator lights are as follows:

The green LED indicates normal operation of the inverter.

The red LED indicates the status of the GFDI fuse, located inside the Sunny Boy. If this LED is lit, the GFDI fuse has cleared or is not present.

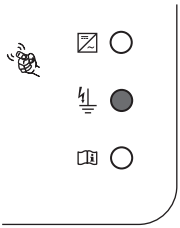

The yellow LED indicates that there is a fault of some kind, either inside the inverter or somewhere in the PV system. The inverter will not operate until the fault has been corrected. The different error codes and possible causes are addressed later in this section and in section 9 “Troubleshooting” (page 80).

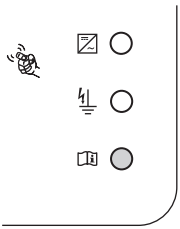

The red and yellow LEDs combined indicate that the inverter has detected a ground fault. The ground fault must be located and cleared and the inverter reset manually. The inverter will not restart automatically after detecting a ground fault. The ground fault may also clear the GFDI fuse.

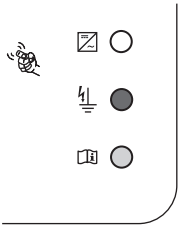

All GFDI fuses are disabled in turbine mode.

8.1 LED operation indicators

Standby (night)

The inverter is in standby mode because the input voltage is too low for operation.

Initialization

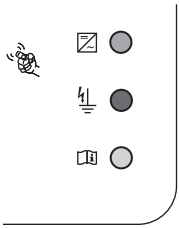

The inverter is initializing. The power from the array is sufficient to initialize control power, but not yet powerful enough to begin normal operation. Data transmission is not possible during initialization.

Occasionally, during inclement weather or low irradiation, the LEDs may all turn on at once and then go off again. This indicates that the inverter is trying to initialize but the power available from the array is not sufficient for normal operation. This is not a malfunction.

Starting

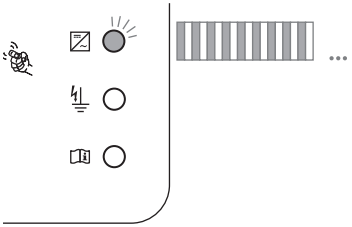

The inverter has sufficient PV power to calibrate its internal systems, but not enough to begin normal operation. Typically, the calibration lasts less than 10 seconds and then the inverter resumes normal operation. PV voltage must remain > PV Start Voltage setting for the period of the P-Start parameter setting. (See chapter 9 "Troubleshooting" (page 80)) The inverter will also show this status if it has been manually set to STOP mode.

Waiting

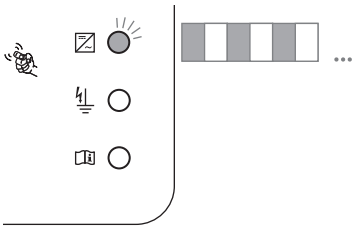

The inverter has determined that there is enough voltage from the array to operate and is checking the condition of the grid prior to connecting to it.

If the inverter fails to connect to the utility grid 3 times in a row, it will wait 10 minutes before the next attempt.

In case of a grid failure, the Sunny Boy waits 5 minutes before it tries to reconnect to the grid.

Normal operation

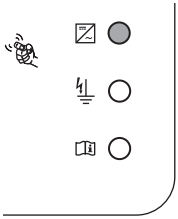

The inverter is feeding the utility grid in either “MPP”, “Constant Voltage” or “Turbine” mode.

“MPP” Mode: The Sunny Boy adjusts the voltage and current from the PV array to obtain the greatest PV output power.

“Constant Voltage” Mode: The input voltage has been set to a fixed value. This value is set by using the Sunny Boy Control or the Sunny Data software. (The parameter name is “V-Const”) This mode is typically used for fuel cell or micro-hydro applications.

“Turbine” Mode: This mode is used for DC rectified motor sources with a dynamic power curve (typically wind turbines). The user can set the magnitude and slope of the curve to match a particular alternator.

Derating

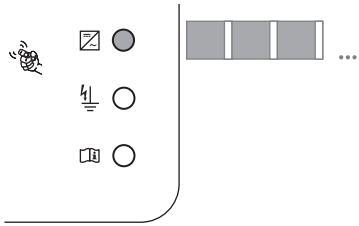

The Sunny Boy is designed to operate at full rated power up to 113 °F (45 °C) ambient. The inverter will continue to operate beyond 113 °F (45 °C) and will derate as required to maintain a safe internal component temperature. Unnecessary derating can be caused by blocked fan intakes. For this reason the fan intakes should be inspected often and cleaned when needed.

8.2 LED fault indicators

Ground fault

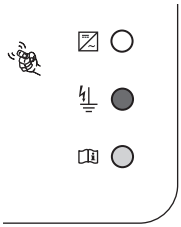

The inverter has detected a ground fault in the PV system and has disconnected from the grid. The ground fault must be located and fixed before the inverter will resume normal operation. Refer to Section 9 "Troubleshooting" (page 80) for information on solving PV array ground faults. (The inverter will not restart automatically)

All GFDI fuses are disabled in turbine mode.

Cleared GFDI fuse

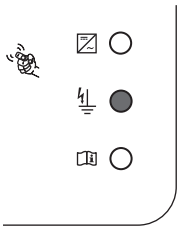

The GFDI fuse located in the fuse holder on the circuit board of the inverter has been cleared or is not present. This fuse is used to protect the PV system in the event of an array ground fault. Troubleshoot the PV array for ground faults prior to replacing this fuse.

CAUTION

Risk of fire due to incorrectly dimensioned fuse.

Burn injuries will result.

- For continous protection, only replace fuses with fuses of same type and size.

The Sunny Boy is shipped with a Littelfuse KLKD 1 Amp, 600 V AC/DC type fuse.

Control system fault

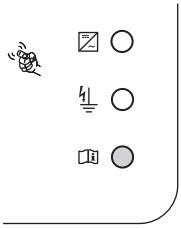

The yellow LED remains lit.

The Sunny Boy has detected a fault within the internal monitoring systems. When the inverter detects a fault of this kind it will no longer connect to the utility grid. To correct this, the inverter must be serviced by a qualified service technician. Contact SMA for assistance.

Grid failure

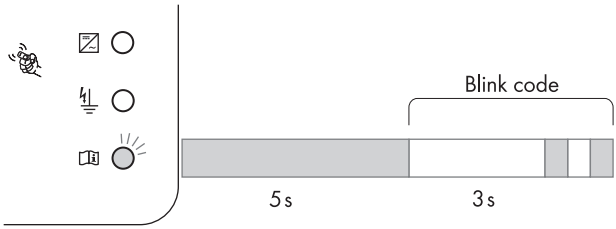

The yellow LED is on for 5 seconds, out for 3 seconds and then blinks twice. The code is repeated 3 times. This code sequence will repeat as long as there is a grid fault condition.

This code can be caused by any of the following conditions:

- Low Grid Voltage (< Vac Min)
- High Grid Voltage (> Vac Max)
- Low Grid Frequency (< fac Min)
- High Grid Frequency (> fac Max)
- Rapid change in grid frequency or voltage

Check the condition of the grid at the AC terminal blocks within the Sunny Boy. Also inspect the AC disconnect between the Sunny Boy and the grid.

DANGER

High voltages are present on the AC and DC cables. Risk of electric shock.

Death or serious injury will result.

- Do not touch power cables and screw terminals.
- The checking must be done by qualified personnel only.

High DC input voltage

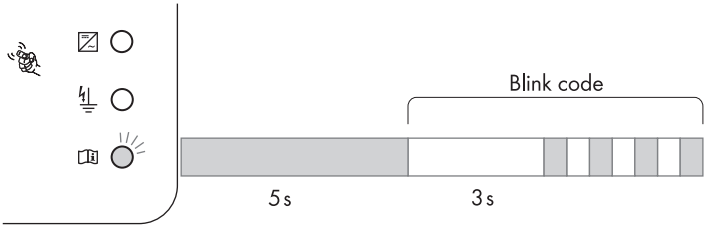

The yellow LED is on for 5 seconds, remains off for 3 seconds and then blinks 4 times. The code is repeated 3 times. If the condition remains the code will continue to be sent.

The inverter has detected a DC input voltage that is too high for safe operation.

NOTICE

Damage to the inverter due to high DC input voltage.

- Disconnect the inverter from the PV array immediately.
- Test the DC voltage at the DC disconnect switch before energizing the inverter.

Inverter fault

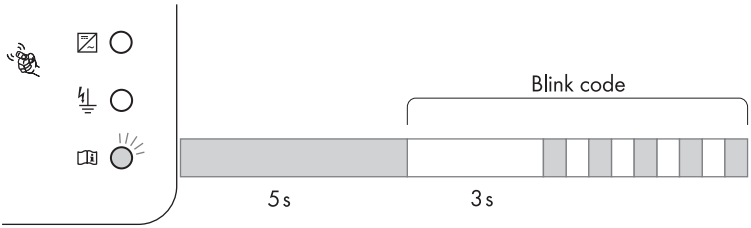

The yellow LED is on for 5 seconds, remains off for 3 seconds and then blinks 5 times. The code is repeated 3 times. If the condition remains the code will continue to be sent.

The inverter has encountered an internal fault that prohibits normal operation and will most likely require servicing.

If problems occur contact SMA for assistance.

8.3 Status messages on the LCD display

The Sunny Boy comes standard with the “Sunny Display“ LCD in the lid.

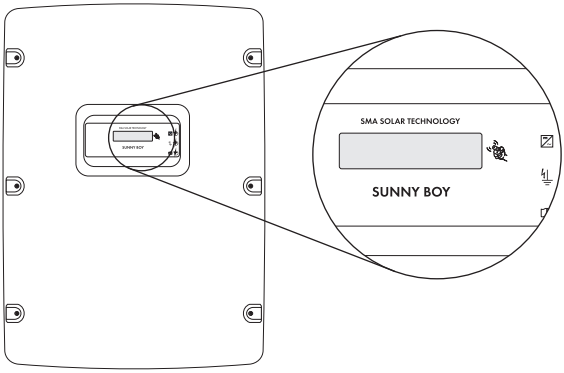

Activation of the backlight

The backlight is activated by knocking twice on the lid. Additional knocks will scroll through the display messages.

The backlight shuts off automatically after 2 minutes.

INIT messages

The following messages are displayed during initialization of the inverter:

```
Sunny Boy
WRXKuxxx
```

The installed firmware versions of the control system processor (BFR) and the current regulator processor (SRR) are displayed after 6 seconds.

```
BFR Version x.xx.
SRR Version x.xx
```

Operation messages

The LCD continuously scrolls through all relevant operating data. Each message (MSG) is displayed for 5 seconds, after all messages have been displayed the LCD repeats from the beginning.

MSG #1 “E-Today“ (total energy produced on this day) is displayed together with the current operating mode:

```
E-today 8.86kWh
Mode MPP
```

MSG #2 Nominal grid voltage configuration and actual line-to-neutral voltage measurements:

```
Gridtype - 208V
L1 120V L2 120V
```

The Sunny Boy 8000-US may not be connected to a 208 V grid.

MSG #3 Actual AC power output and DC input voltage:

```
Pac        500W
Vpv        380V
```

MSG #4 Accumulated energy yield of the device since installation and the total operating hours:

```
E-Total 724.4kWh
h-total     512h
```

The screens may also be scrolled through manually by repeatedly knocking on the lid of the inverter. Each knock advances the screen to the next message.

Fault messages

In case of a fault condition the LCD switches to "Fault" mode and the backlight is activated.

The upper display line indicates one of the three following failure types:

- Disturbance

  For example, this Disturbance message would be displayed if the Sunny Boy detected a problem with the frequency of the utility grid. The message would clear automatically once the condition was corrected. Disturbances are typically caused by a measured value exceeding a predetermined limit.

  ```
  Disturbance
    Fac-Bfr
  ```

  The display will show the value of the error (at:) as well as the present value for the particular parameter (present:).

  ```
  at:       59.29Hz
  present:  59.30Hz
  ```

- Warning

  For example, this Warning message would be displayed if the GFDI fuse was open or cleared. Typically, Warning messages indicate a system condition that should be investigated. Warning conditions will not preclude inverter operation.

  ```
     Warning
  GFDI Fuse Open
  ```

- Error

  For example, this Error message would be displayed if the inverter detected a problem with the internal ROM. An Error condition will prevent the inverter from restarting until the condition is cleared.

  ```
      Error
       ROM
  ```

Each fault message is displayed for 5 seconds. After 5 seconds, the LCD will once again scroll through its normal operating screens. The fault condition will be included in the series of screens until the condition is cleared.

8.3.1 LCD display language selection

The LCD Display has the ability to display information in one of four different languages. Setting the language is performed by using a pair of slide switches located along the bottom edge of the display PC board. The language choices are: Spanish, English, French and German. Use the diagram and chart below for setting the display.

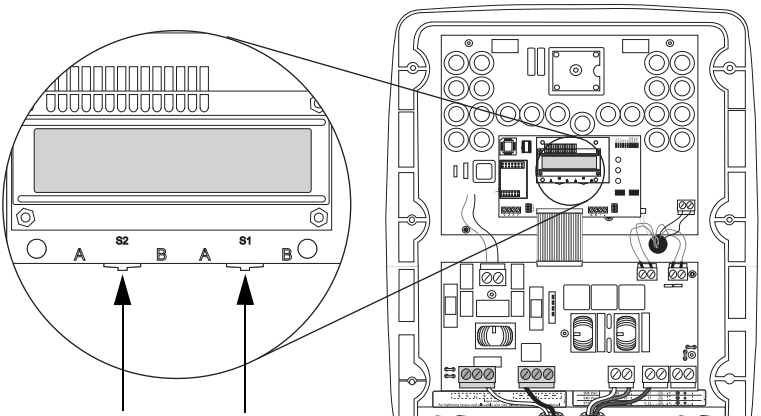

Position of the switches for configuring the display language

Language selection switches for the LCD display

Language	Switch S2	Switch S1
German	B	B
English	B	A
French	A	B
Spanish	A	A

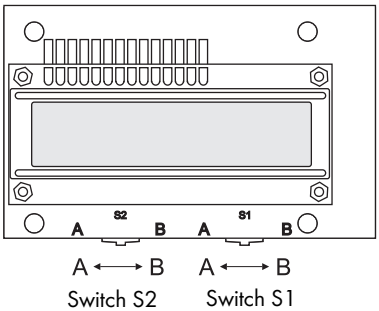

8.4 Measuring channels and parameters

The communication options support a number of measuring channels and messages from the Sunny Boy inverters.

The following abbreviations are used:

BFR	Sequential Control System (Betriebsführungsrechner)
SRR	Current Control System (Stromregelungsrechner)

The BFR and SRR are redundant processor control systems for the utility protection functions.

8.4.1 Measuring channels

Vpv:	PV input voltage
Vpv Setpoint:	MPPT DC voltage target
Iac:	Grid current
Vac:	Grid voltage L1 - L2
Vac L1:	Grid voltage L1 - N
Vac L2:	Grid voltage L2 - N
Fac:	Grid frequency
Pac:	Power fed to grid
Vpv-PE:	PV-voltage to earth (For troubleshooting PV ground faults)
Temperature:	Temperature measured at IGBT module
Ipv:	PV current
Max Temperature:	Max temperature measured at IGBT
Max Vpv:	Max PV input voltage
I-dif:	Error current
Vfan:	Fan voltage
E-Total:	Total energy yield
h-Total:	Total operation hours
h-on:	h-on indicates how long sufficient DC voltage has been applied to the Sunny Boy and the Sunny Boy has been active including the time it was not able to feed to the utility with respect to low DC voltage or operation in stop mode.
Power On:	Total system start-up counter
Event-Cnt:	Event counter
Serial Number:	Serial number of the Sunny Boy
CO2 saved:	Amount CO2 saved in operation time
Mode:	Current operating mode
Grid Type:	Type of grid the Sunny Boy is connected to
Error:	Description of fault

8.4.2 Operating mode

Stop:	Manual system stop
Offset:	Offset calibration of the electronics (at start-up)
Waiting:	PV voltage is not high enough to start
Grid monitoring:	Synchronizing to grid (at start-up)
MPP-Search:	MPPT range test (at start-up)
MPP:	Sunny Boy is in MPP mode (normal operation)
V-Const:	Sunny Boy is in constant voltage MPP mode
Derating:	Reduction of the grid feeding power due to abnormal heatsink temperatures
Disturbance:	Grid related fault condition, self clearing
Error:	Inverter fault, user interaction required
Warning:	System warning advising further investigation

8.4.3 Sunny Boy operating parameters

Changes to factory preset parameters may adversely effect inverter operation and performance.

- The changing of operating parameters must only be performed by qualified personnel.

Modifications of parameters marked with * may result in changes to conformity with IEEE 1547 and should be approved by the local utility and/or authority.

8.4.4 Operating parameters of the Sunny Boy

Name	Unit	Range	Default	Password level	Description
AntiIsland-Ampl*	deg	0 ... 10	0	Installer	Amplification of the Anti Island process
AntiIsland-Freq*	mHz	0 ... 2000	500	Installer	Repitition rate of the Anti Island process
CO2-Fact	lbs/kWh	0 ... 2	1.7	Installer	The Sunny Boy evaluates the yield and indicates the approximate CO2 emission avoided by your Sunny Boy. The amount of CO2 avoided is computed according to the kWh produced (E-total) multiplied by the factor defined in the parameter "CO2".
Default		USA/UL1741/ 2005, OFF_Grid, NON IEEE1547	USA/ UL1741/ 2005	Installer	Used for adjusting the parameters country specific settings. Note: After changing one of the parameteres marked with “*“, the parameter “default“ changes to “adjusted“ automatically.

Name	Unit	Range	Default	Password level	Description
dFac-MAX*	Hz/s	0.005 ... 4	0.5 (for country setting USA/ UL1741/ 2005)	Installer	Maximum “rate of frequency change” before anti-islanding protection engages
E_Total	kWh	0 ... 200000	0	Installer	Total energy yield of the inverter. Changing the value can be necessary when a Sunny Boy is exchanged and you wish to match the previously acquired data.
Fac-delta–*	Hz	0.2 ... 3	0.69 (for country setting USA/ UL1741/ 2005)	Installer	Maximum allowable operating frequency above and below 60 Hz Default value is optimal for installations < 30 kW.
Fac-delta+*	Hz	0 ... 4.5	0.49 (for country setting USA/ UL1741/ 2005)	Installer	
Fac-MinTripTime*	s	0.16 ... 300	0.16	Installer	Utility interconnection frequency trip time. Default value is optimal for installations < 30 kW.
Fan-Test		1 / 0	0	Installer	By setting this parameter to "1" you can check the function of the fans. This test turns the fans at maximum speed.
h_Total	h	0 ... 200000	0	Installer	Total operating hours of the inverter. Changing the value can be necessary when a Sunny Boy is exchanged and you wish to match the previously acquired data.
Memory Function		no function, Default param., Reset Op.Data, Reset errors	no function	Installer	Default param.: Sets all parameters to default. Reset Op.Data: Sets all parameters that are visible in user level to default values. Reset errors: Resets all permanent device disable errors.
Operating Mode		MPP-Operation, Turbine, V-const, Stop	MPP	Installer	Operating Modes of the Sunny Boy: MPP-Operation: Sets the Sunny Boy in Maximum Power Point Tracking Mode V-const: Constant Voltage Mode (Setpoint defined in “Vconst-Setval”) Turbine: Operating mode for wind power plants Stop: Disconnection from utility, no operation
T-Max-Fan	°C	0 ... 100	90	Installer	Temperature for maximum fan rotation speed.

Name	Unit	Range	Default	Password level	Description
T-Start	s	5 ... 1600	10	Installer	The time the inverter waits to connect to the grid after Vpv-Start is exceeded. This value defaults to 5 minutes after a utility fault.
T-Start-Fan	°C	0 ... 100	70	Installer	Fan turn-on temperature at minimum rotating speed.
T-Stop	s	1 ... 1800	2	Installer	The time that the Sunny Boy waits to disconnect from the grid when Pac falls below minimum necessary Vpv.
T-Stop-Fan	°C	0 ... 100	55	Installer	Fan turn-off temperature
V-Const Setval	V	**SB 5000-US - SB 7000-US:** 250 ... 600 **SB 8000-US:** 300 ... 600	600	Installer	PV Setpoint voltage for constant voltage operation. These parameters only are important in case the parameter "Operating Mode" is set to "V-const".
Vac-Min*	%	0 ... 50	12	Installer	Values are used to calculate the lower limit of allowable AC voltage. Default value is optimal for installations < 30 kW. The default 12 results in a trip value of 88 % as listed under trip limits.
Vac-Max*	%	0 ... 20	10	Installer	Values are used to calculate the upper limit of allowable AC voltage. Default value is optimal for installations < 30 kW. The default 10 results in a trip value of 110 % as listed under trip limits.
Vac-Min-Fast*	%	0 ... 50	50	Installer	Values are used to calculate the lower limit of allowable AC voltage for fast disconnection. Default value is optimal for installations < 30 kW. The default 50 results in a trip value of 50 % as listed under trip limits.
Vac-Max-Fast*	%	0 ... 20	20	Installer	Values are used to calculate the upper limit of allowable AC voltage for fast disconnection. Default value is optimal for installations < 30 kW. The default 20 results in a trip value of 120 % as listed under trip limits.
Vac-Min-Recnet	%	0 ... 50	11.7	Installer	Values are used to calculate the lower and upper limits to reconnect to the grid after a grid frailure.
Vac-Max-Recnet	%	0 ... 20	5.83	Installer	
Vpv-Start	V	**SB 5000-US - SB 7000-US:** 250 ... 600 **SB 8000-US:** 300 ... 600	**SB 5000-US - SB 7000-US:** 300 **SB 8000-US:** 365	Installer	Minimum DC voltage for the Sunny Boy to connect to the grid.

The following parameters appear in parameter list but cannot be modified:

8.4.5 Fixed operating parameters of the Sunny Boy

Name	Unit	Range	Default	Description
Plimit	W	fixed	**SB5000-US:** 5100 **SB6000-US:** 6100 **SB7000-US:** 7100 **SB8000-US:** 8100	Upper limit of AC output power
SMA-SN				Serial Number of the Sunny Boy
Software-BFR				Firmware version of the operation control unit (BFR)
Software-SRR				Firmware version of the current control unit (SRR)

9 Troubleshooting

9.1 General

Our quality control program assures that each inverter is manufactured to exact specifications and is thoroughly tested before leaving the factory. If you encounter difficulty with the operation of your inverter, please follow the steps below in an effort to correct the problem.

- Check the blinking code on the lid of the Sunny Boy and compare the code with the blinking codes in Section 7 "Commissioning" (page 64).
- Check and record the exact "Mode" and/or "Error" messages on the LCD display or other communication system available. Take appropriate action to correct the issue.
- If necessary, check the DC and AC voltages at terminals inside the inverter. Be sure to observe all of the safety precautions listed throughout this manual when doing so, or hire a qualified professional.
- If the system problem persists, contact SMA technical support at:

  (916)625-0870.

  In order to better assist you when contacting SMA, please provide the following information. This information is required for service assistance.

Information regarding the Sunny Boy:

- Serial number
- Model Number
- Short description of the problem
- Blinking Code or display message
- What error code is indicated? (Provided a communication option is installed)
- AC line voltage
- DC line voltage
- Check GFDI Fuse
- Can you reproduce the failure? If yes, how?
- Has this problem occurred in the past?
- What were the ambient conditions when the problem occurred?

Information regarding the PV modules:

- Manufacturer name and model number of the PV module
- Output power of the module
- Open circuit voltage (Voc) of the module
- Number of modules in each string

If it becomes necessary to send the Sunny Boy back to the manufacturer for service, please ship it in the original box to avoid damage during shipping.

9.2 Error messages

If a fault occurs, the Sunny Boy generates an error code according to the operating mode and the detected fault.

Error type	Error code	Description
Disturbance	Bfr-Srr	Communication between micro-controllers is failing
Warning	Derating	The inverter reduces the output power due to high internal temperature.
Error	EarthCurMax-B	BFR-earth current between PV+ and GND is out of tolerable range
Error	EarthCurMax-S	SRR-earth current between PV+ and GND is out of tolerable range
Disturbance	EEPROM	Transition failure during reading or writing of data EEPROM, the data is not essential for safe operation - this failure does not effect performance.
Error	EEPROM p	Data EEPROM defective, device is set to permanent disable due to the fact that the data loss affects important functions of the inverter. Contact SMA.
Disturbance	EeRestore	Internal failure
Disturbance	Fac-Bfr, Fac-Srr	The AC grid frequency is exceeding the allowable range. ("Bfr" or "Srr" is an internal message and is not important to the user.) The Sunny Boy assumes that the public grid is down and disconnects from the grid in order to avoid islanding. If the grid frequency is within the tolerable range and you still observe the failure message "Fac-Bfr" or "Fac-Srr" contact SMA.
Warning	GFDI Fuse Open	The GFDI-Fuse is open or cleared. Check PV array for ground faults before replacing the fuse.
Disturbance	Grid-Timeout, Grid-Fault-S	The type of grid could not be detected (208 V/ 240 V/277 V). In case you are connecting to the 277 V grid, check up if the cables for L1 and N are in the correct position.

Error type	Error code	Description
Disturbance	Imax	Over current on the AC side. This failure code is indicated in case the current to the AC grid exceeds the specification. This may happen in case of harmfull interference on the grid. If you observe “Imax“ often, check your grid. For assistance contact SMA.
Disturbance	K1-Close	Relay test failed. Contact SMA for assistance.
Error	K1-Open, K2-Open	
Disturbance	MSD-FAC, MSD-Idif	Internal measurement comparison error: The Sunny Boy measured values of BFR and SRR are too different from each other. Contact SMA for assistance.
Error	MSD-VAC	
Disturbance	OFFSET	Grid monitoring self-test failed.
Error	ROM	The internal test of the Sunny Boy control system firmware failed. Contact SMA in case you observe this failure often.
Disturbance	Shut-Down	Internal over current continuous
Disturbance	Vac-Bfr, Vac-Srr	The AC grid voltage is exceeding the allowable range. (“Bfr“ or “Srr“ is an internal message and is not important for the user.) Vac can also result from a disconnected grid or a disconnected AC cable. The Sunny Boy assumes that the public grid is down and disconnects from the grid in order to avoid islanding. If the grid voltage is within the tolerable range and you still observe the failure message “Vac-Bfr“ or “Vac-Srr“ contact SMA.
Disturbance	VacL1-Bfr, VacL2-Bfr, VacL1-Srr, VacL2-Srr	Voltage is too high or too low on the indicated leg.
Disturbance	VpvMax !PV Overvoltage! !Disconnect DC!	DC input voltage above the tolerable maximum value. Disconnect DC immediately!
Disturbance	Watchdog	Watchdog for operation control triggered

Error type	Error code	Description
Disturbance	XFMR	Transformer is connected to the wrong grid. Check the connection of the transformer. In Delta corner grounded grids make sure that the Ground of the grid is connected to the terminal L2 In unbalanced 208 V and 240 V grids interchanging L1 and L2 may clear this error.
Disturbance	XFMR_TEMP_F	High transformer temperature, the Sunny Boy stops working and the fans work with maximum speed.
Warning	XFMR_TEMP_W	High transformer temperature is gone. The Sunny Boy starts working and shows the failure “XFMR_TEMP_W“. Check the function of the fans.

10 Maintenance

The Sunny Boy is designed to provide many years of trouble-free service. Performing regular maintenance will help ensure the long life and high efficiency of your system.

10.1 Cleaning the fans

The fan intakes and handle covers should be cleaned periodically with a vacuum cleaner. (Do not blow air into the fan areas) For deeper cleanings, the fans can be removed completely.

The Sunny Boy is fitted with two fans on its underside.

In order to clean the fans, proceed as follows:

1. Turn off all DC and AC disconnects and wait for 5 minutes for any residual voltages to dissipate.
2. Disconnect the Sunny Boy from both the DC and AC connections, paying attention to the safety instructions in Section "AC grounding" (page 36).
3. Wait for the fans to stop rotating.
4. Push the 2 latches at the top of the black plastic cover to one side and remove it carefully with the fan grates mounted behind.
5. The fans are fastened with 3 plastic latches. Unhook the latches and remove the fans by pulling them downwards slowly and carefully. The fan cables are long enough that you can move the fans far enough out to disconnect the internal plug in the Sunny Boy. To do so, unlock the corresponding plugs and remove them. You can now take out the fans for cleaning.

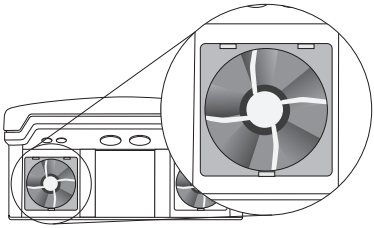

6. To clean the fans use a soft brush or cloth. Do not use air pressure for cleaning the fans. This will damage the fans.
7. When the fans are clean, reinstall them using the above steps in reverse order.
8. Do not blow air through the fans or the fan screens while the fan plate is assembled on the Sunny Boy.

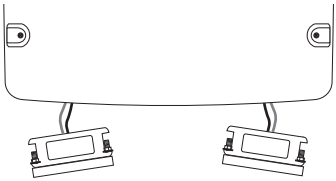

10.2 Cleaning the handle covers

There are handle covers on either side of the Sunny Boy. The Sunny Boy sucks air in from underneath via the fan and blows it out again on the upper sides. For optimum heat dissipation within the device, you have to clean both handle covers. Proceed as follows when cleaning the handle covers:

- The handle covers of the Sunny Boy are on the sides of the enclosure. Place your fingers in the space between the top of the housing and the handle covers and gently pull the handle covers out of their bracket.

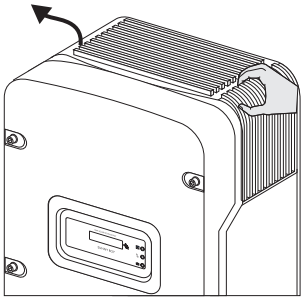

- Insert the handle covers back into the Sunny Boy. The handle covers can only be inserted on the right or left side of the Sunny Boy respectively. "links/left" or "rechts/right" is printed on the inside of the handle covers to help you identify the sides.

NOTICE

Insects entering the Sunny Boy can damage the device.

- The handle covers must not be removed permanently, because otherwise the device is not protected against the entrance of insects!

10.3 Checking the DC Disconnect

Under normal use the DC Disconnect does not need maintenance.

It is recommended, though not compulsory to:

- Check the DC Disconnect regularly.
- Operate the DC Disconnect once a year 10 times.

Operating the switch will clean the contacts and will extend the life of the DC Disconnect.

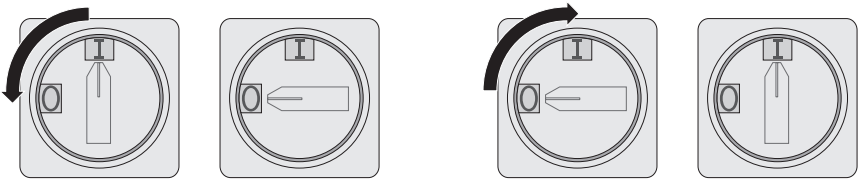

10.4 Testing the fans

You can verify the operation of the fans in two ways:

- Set the parameter “Fan Test“ to "1" (with Sunny Data, Sunny Data Control or with the data logger Sunny Boy Control).

  or

- Turn off the inverter by turning off all DC and AC disconnects and wait 5 minutes for any residual voltages to dissipate.
- Once the LED’s are off, remove the lid and set the jumpers as shown in the figure below.
- Turn on the inverter by turning on the AC disconnect and then the DC disconnect or switch the SMA DC Disconnect to the "1" position.

Jumper position for fan test

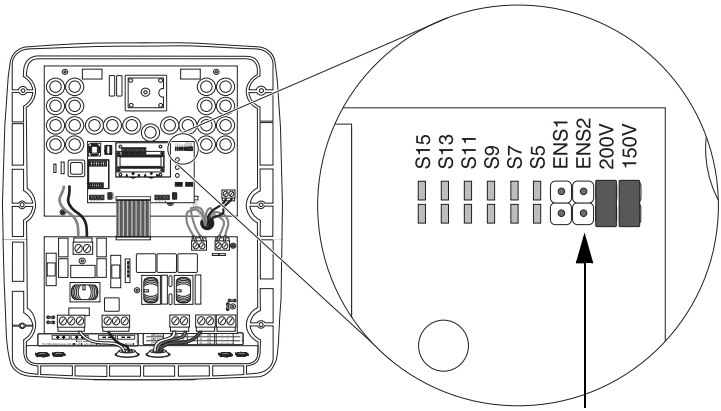

Jumper Position for verifiying the operation of the fans

10.5 Exchanging the fuses

10.5.1 Exchanging the GFDI fuse within the Sunny Boy

1. Turn off all AC and DC switches and/or breakers.
2. Wait for at least 5 minutes.
3. Open the Sunny Boy as described in section 4.1 ”Opening the Sunny Boy” (page 18).
4. Exchange the fuse (A).

   For correct fuse location please refer to section "DC input grounding" on page 53.

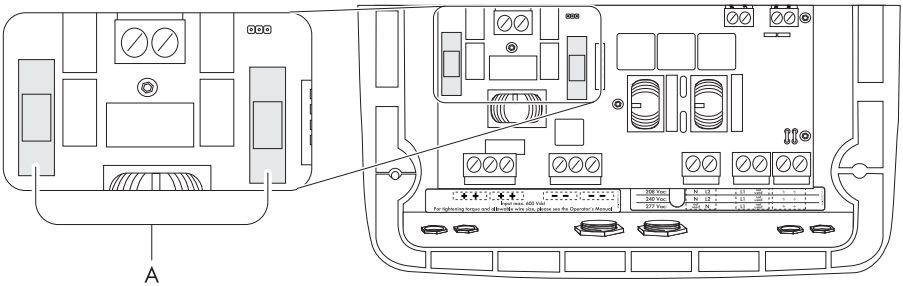

CAUTION

Risk of fire due to incorrectly dimensioned fuse.

Injuries due to fire.

For continous protection, only replace fuses with fuses of same type and size.

5. Ensure that the fuse is completely inserted in the clamp.
6. Close the Sunny Boy.
7. Turn on all AC and DC switchens and/or breakers.

10.5.2 Exchanging PV string fuses within the SMA DC Disconnect

1. Turn OFF all AC and DC switches and/or breakers.
2. Wait for at least 5 minutes.
3. Open the SMA DC Disconnect as described in section 6.3 "Opening the SMA DC Disconnect" (page 39).
4. Exchange the fuses having regard to the information on the next page.

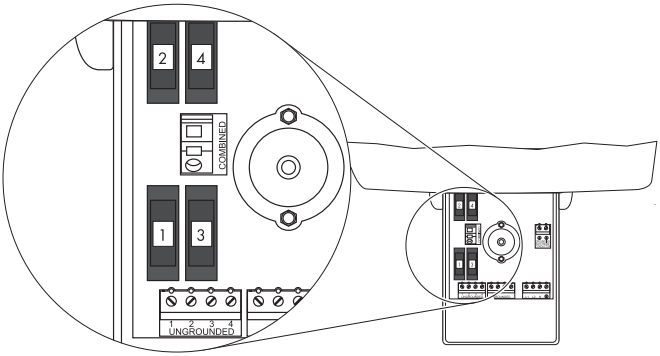

5. Close the SMA DC Disconnect.
6. Turn ON all AC and DC switches and/or breakers.

PV string fuse sizing

In any electrical system, fuses are used to protect wiring and equipment from excessive currents that can cause damage, heating or in extreme cases even fire. If the fuse rating is too small it could open during normal operation. If the fuse rating is too large, it cannot provide the needed protection. In PV systems, the minimum and maximum size of the series fuse is determined by the electrical ratings of the PV module as well as by UL and *National Electrical Code®* requirements. Be sure to consult with your PV module manufacturer for appropriate PV string fuse ratings.

The minimum size of fuses and wiring are calculated using the Short Circuit Current Rating (Isc) of the PV module. The *National Electrical Code®* requires that all fuses and wiring be sized for a minimum of 1.56 times the Isc of the PV module used in the system. The proper size PV string fuse is determined by calculating 1.56 x Isc (of the PV module) and then rounding up to the next standard fuse size.

If the Isc of the PV module equals 6.9 Adc, then the PV string fuse size is determined by 1.56 x 6.9 = 10.76. The next standard fuse size would be a 12A, 600Vdc fuse.

The fuse size per string must not be greater than the maximum fuse size rating of the PV module. Refer to the data sheet of the PV module. If no maximum fuse size is indicated, contact the PV module manufacturer.

DC Disconnect requirements

National Electrical Code® 690.15-18 allows the use of fuse holders as a suitable means of disconnecting PV arrays for servicing. Additional DC disconnects external to the inverter may be required by the local authority having jurisdiction.

WARNING

Risk of electric shock and arc flash due to removing fuses under load.

Serious injuries will result.

Do not remove a fuse while the inverter is under load.

PV string fuses

The SMA DC Disconnect is shipped with 15 A, 600 V DC fuses in the fuse holders. The maximum string fuse rating for the SMA DC Disconnect is 20 A.

The figure in chapter 10.5.2 "Exchanging PV string fuses within the SMA DC Disconnect" (page 88) shows the string fuse holders and their corresponding terminals.

11 Technical data

11.1 FCC compliance information

SMA Utility Interactive Inverter, Model Sunny Boy

This device complies with Part 15 of the FCC Rules. Operation is subject to the following conditions:

(1) This device may not cause harmful interference, and

(2) this device must accept any interference received, including interference that may cause undesired operation.

NOTE: This equipment has been tested and found to comply with the limits for a Class A & B digital device, pursuant to Part 15 of the FCC Rules. These limits are designed to provide reasonable protection against harmful interference in a residential installation. This equipment generates, uses, and can radiate radio frequency energy and if not installed and used in accordance with the instructions, may cause harmful interference to radio communications. However, there is no guarantee that interference will not occur in a particular installation. If this equipment does cause harmful interference to radio or television reception, which can be determined by turning the equipment off and on, the user is encouraged to try to correct the interference by one or more of the following measures:

- Reorient or relocate the receiving antenna.
- Increase the separation between the equipment and the receiver.
- Connect the equipment into an outlet on a circuit different from that to which the receiver is connected.
- Consult the dealer or an experienced radio/TV technician for help.
- The user is cautioned that changes or modifications not expressly approved by SMA America, Inc. could void the user's authority to operate this equipment.

11.2 Sunny Boy wiring diagrams

11.2.1 Without SMA DC Disconnect

Sunny Boy connections for 208 V and 240 V AC grids

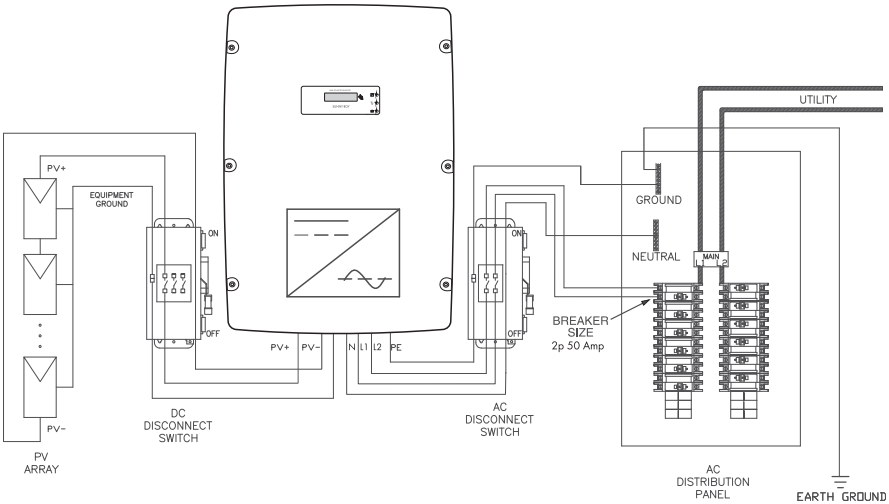

Sunny Boy connections for 277 V AC grids

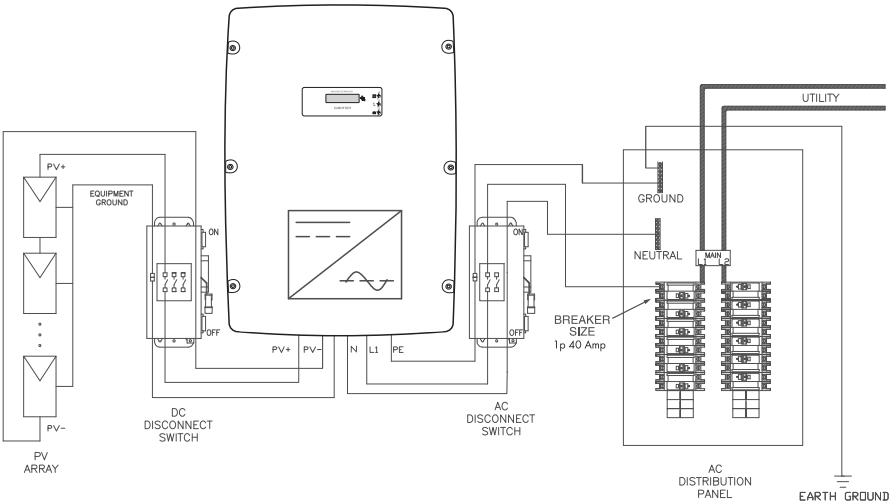

11.2.2 With SMA DC Disconnect

Sunny Boy connections for 208 V and 240 V AC grids

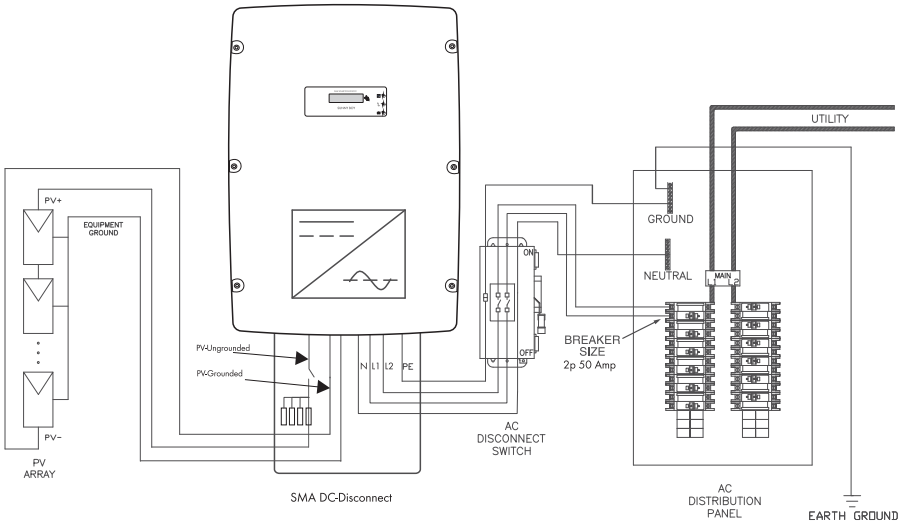

Sunny Boy connections for 277 V AC grids

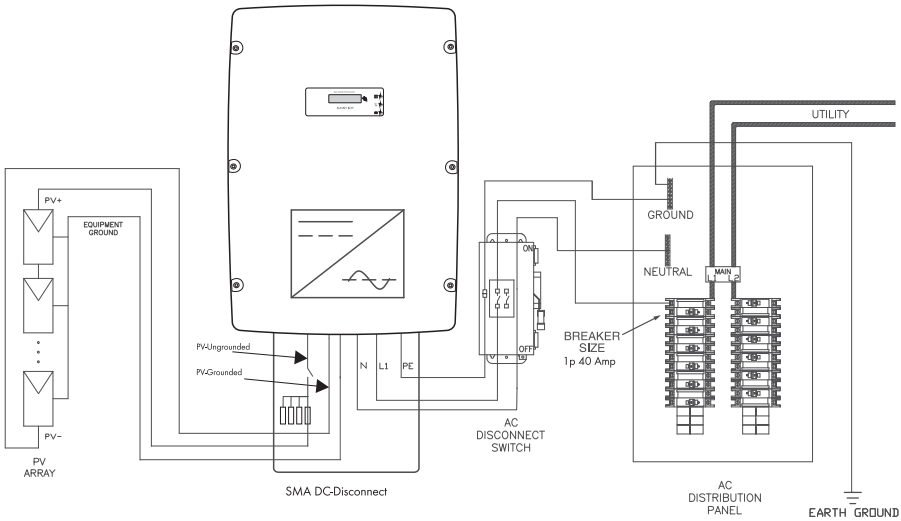

11.3 Specifications

11.4 Sunny Boy 5000-US

PV generator connection

Peak Power Tracking Voltage	250 V ... 480 V
Range of Input Operating Voltage	250 V ... 600 V
Maximum Array Input Power	6,250 W
Maximum DC Power	5,300 W
PV Start Voltage	300 V
Maximum DC Input Current	21 A
Maximum Input Short Circuit Current	36 A
Maximun Utility Backfeed Current to PV array	50 A AC
DC Voltage Ripple	< 10 %

Grid connection

AC Operating Voltage Range at 208 V nominal	183 V ... 229 V
AC Operating Voltage Range at 240 V nominal	211 V ... 264 V
AC Operating Voltage Range at 277 V nominal	244 V ... 305 V
AC Operating Frequency Range	59.3 Hz ... 60.5 Hz
AC Frequency Nominal	60 Hz
AC Maximum Continous Output Power	5,000 W
Current THD	< 4 %
AC Maximum Continous Output Current at 208 V	24 A
AC Maximum Continous Output Current at 240 V	20.8 A
AC Maximum Continous Output Current at 277 V	18 A
Maximum Output Fault Current	57.6 A
Maximum Output Overcurrent Protection	50 A
Synchronization In-Rush Current	9.23 A
Trip Limit Accuracy	±2 %
Trip Time Accuracy	±0.1 %
Power Consumption at Night	0.1 W
Power Consumption in Operation	< 7 W

Efficiency

Output Power Factor Range	0.95 ... 1.0
Output Power Factor Nominal	0.99
Peak Inverter Efficiency	96.8 %
CEC Weighted Efficiency	95.5 %

Ambient conditions

Ambient Temperature Range	− 13 °F ... +113 °F (− 25 °C ... +45 °C)

Mechanical data

Width x Height x Depth	18.42 in. x 24.14 in. x 9.53 in. (468 mm x 613 mm x 242 mm)
Weight	147 lbs. (67 kg)
Noise Emission	44 dB(A)

General data

Inverter Technology	True sine, low frequency transformer
Cooling Concept	OptiCool, forced active cooling

11.5 Sunny Boy 6000-US

PV generator connection

Peak Power Tracking Voltage	250 V ... 480 V
Range of Input Operating Voltage	250 V ... 600 V
Maximum Array Input Power	7,500 W
Maximum DC Power	6,400 W
PV Start Voltage	300 V
Maximum DC Input Current	25 A
Maximum Input Short Circuit Current	36 A
Maximun Utility Backfeed Current to PV array	50 A AC
DC Voltage Ripple	< 10 %

Grid connection

AC Operating Voltage Range at 208 V nominal	183 V ... 229 V
AC Operating Voltage Range at 240 V nominal	211 V ... 264 V
AC Operating Voltage Range at 277 V nominal	244 V ... 305 V
AC Operating Frequency Range	59.3 Hz ... 60.5 Hz
AC Frequency Nominal	60 Hz
AC Maximum Continous Output Power	6,000 W
Current THD	< 4 %
AC Maximum Continous Output Current at 208 V	29 A
AC Maximum Continous Output Current at 240 V	25 A
AC Maximum Continous Output Current at 277 V	21.6 A
Maximum Output Fault Current	57.6 A
Maximum Output Overcurrent Protection	50 A
Synchronization In-Rush Current	9.23 A
Trip Limit Accuracy	±2 %
Trip Time Accuracy	±0.1 %
Power Consumption at Night	0.1 W
Power Consumption in Operation	< 7 W

Efficiency

Output Power Factor Range	0.95 ... 1.0
Output Power Factor Nominal	0.99
Peak Inverter Efficiency	97.0 %
CEC Weighted Efficiency at 208 V AC	95.5 %
CEC Weighted Efficiency at 240 V AC	95.5 %
CEC Weighted Efficiency at 277 V AC	96.0 %

Ambient conditions

Ambient Temperature Range	− 13 °F ... +113 °F (− 25 °C ... +45 °C)

Mechanical data

Width x Height x Depth	18.42 in. x 24.14 in. x 9.53 in. (468 mm x 613 mm x 242 mm)
Weight	147 lbs. (67 kg)
Noise Emission	44 dB(A)

General data

Inverter Technology	True sine, low frequency transformer
Cooling Concept	OptiCool, forced active cooling

11.6 Sunny Boy 7000-US

PV generator connection

Peak Power Tracking Voltage	250 V ... 480 V
Range of Input Operating Voltage	250 V ... 600 V
Maximum Array Input Power	8,750 W
Maximum DC Power	7,500 W
PV Start Voltage	300 V
Maximum DC Input Current	30 A
Maximum Input Short Circuit Current	36 A
Maximun Utility Backfeed Current to PV array	50 A AC
DC Voltage Ripple	< 10 %

Grid connection

AC Operating Voltage Range at 208 V nominal	183 V ... 229 V
AC Operating Voltage Range at 240 V nominal	211 V ... 264 V
AC Operating Voltage Range at 277 V nominal	244 V ... 305 V
AC Operating Frequency Range	59.3 Hz ... 60.5 Hz
AC Frequency Nominal	60 Hz
AC Maximum Continous Output Power	7,000 W
Current THD	< 4 %
AC Maximum Continous Output Current at 208 V	34 A
AC Maximum Continous Output Current at 240 V	29 A
AC Maximum Continous Output Current at 277 V	25.3 A
Maximum Output Fault Current	57.6 A
Maximum Output Overcurrent Protection	50 A
Synchronization In-Rush Current	9.23 A
Trip Limit Accuracy	±2 %
Trip Time Accuracy	±0.1 %
Power Consumption at Night	0.1 W
Power Consumption in Operation	< 7 W

Efficiency

Output Power Factor Range	0.95 ... 1.0
Output Power Factor Nominal	0.99
Peak Inverter Efficiency	97.1 %
CEC Weighted Efficiency at 208 V AC	95.5 %
CEC Weighted Efficiency at 240 V AC	96.0 %
CEC Weighted Efficiency at 277 V AC	96.0 %

Ambient conditions

Ambient Temperature Range	− 13 °F ... +113 °F (− 25 °C ... +45 °C)

Mechanical data

Width x Height x Depth	18.42 in. x 24.14 in. x 9.53 in. (468 mm x 613 mm x 242 mm)
Weight	141 lbs. (64 kg)
Noise Emission	46 dB(A)

General data

Inverter Technology	True sine, low frequency transformer
Cooling Concept	OptiCool, forced active cooling

11.7 Sunny Boy 8000-US

PV generator connection

Peak Power Tracking Voltage	300 V ... 480 V
Range of Input Operating Voltage	300 V ... 600 V
Maximum Array Input Power	10,000 W
Maximum DC Power	8,600 W
PV Start Voltage	365 V
Maximum DC Input Current	30 A
Maximum Input Short Circuit Current	36 A
Maximun Utility Backfeed Current to PV array	50 A AC
DC Voltage Ripple	< 10 %

Grid connection

AC Operating Voltage Range at 240 V nominal	211 V ... 264 V
AC Operating Voltage Range at 277 V nominal	244 V ... 305 V
AC Operating Frequency Range	59.3 Hz ... 60.5 Hz
AC Frequency Nominal	60 Hz
AC Maximum Continous Output Power at 240 V	7,680 W
AC Maximum Continous Output Power at 277 V	8,000 W
Current THD	< 4 %
AC Maximum Output Continous Current at 240 V	32 A
AC Maximum Output Continous Current at 277 V	29 A
Maximum Output Fault Current	61.7 A
Maximum Output Overcurrent Protection	50 A
Synchronization In-Rush Current	14.32 A
Trip Limit Accuracy	±2 %
Trip Time Accuracy	±0.1 %
Power Consumption at Night	0.1 W
Power Consumption in Operation	< 7 W

Efficiency

Output Power Factor Range	0.95 ... 1.0
Output Power Factor Nominal	0.99
Peak Inverter Efficiency	96.5 %
CEC Weighted Efficiency at 240 V AC	96.0 %
CEC Weighted Efficiency at 277 V AC	96.0 %

Ambient conditions

Ambient Temperature Range	− 13 °F ... +113 °F (− 25 °C ... +45 °C)

Mechanical data

Width x Height x Depth	18.42 in. x 24.14 in. x 9.53 in. (468 mm x 613 mm x 242 mm)
Weight	147 lbs. (67 kg)
Noise Emission	49 dB(A)

General data

Inverter Technology	True sine, low frequency transformer
Cooling Concept	OptiCool, forced active cooling

Specifications subject to change without notice.

Values at nominal conditions.

11.7.1 SMA DC Disconnect

Maximum DC Input Current	36 A DC
Maximum System Voltage	600 V DC
Maximum String Fuse Rating	20 A DC
Maximum AC Operating Current	40 A AC
Enclosure	3R rated

Specifications subject to change without notice.

11.8 Trip limits/trip times

Nominal frequency	Trip limit	Trip frequencies	Trip times
60 HZ	> 60.5 Hz	60.45 Hz ... 60.55 Hz	max. 0.1602 s
	< 57.0 Hz ... 59.8 Hz (default 59.3 Hz)	56.95 Hz ... 59.85 Hz (default 59.25 Hz ... 59.35 Hz)	adjustable 0.16 s ... 300 s (default max. 0.1602 s)
	< 57.0 Hz	56.95 Hz ... 57.05 Hz	max. 0.1602 s

Nominal voltage	Trip limit	Trip voltages line-to-neutral*	Trip voltages line-to-line*	Trip times
208 V	50 %	57.6 V ... 62.4 V	99.8 V ... 108.2 V	max. 0.1602 s
	88 %	103.2 V ... 108.0 V	178.9 V ...187.2 V	max. 2.002 s
	110 %	129.6 V ... 134.4 V	224.6 V ... 233.0 V	max. 1.001 s
	120 %	141.6 V ... 146.4 V	245.4 V ... 253.8 V	max. 0.1602 s
240 V	50 %	57.6 V ... 62.4 V	115.2 V ... 124.8 V	max. 0.1602 s
	88 %	103.2 V ... 108.0 V	206.4 V ... 216.0 V	max. 2.002 s
	110 %	129.6 V ... 134.4 V	259.2 V ... 268.8 V	max. 1.001 s
	120 %	141.6 V ... 146.4 V	283.2 V ... 292.8 V	max. 0.1602 s
277 V	50 %	133.0 V ... 144.0 V	N/A	max. 0.1602 s
	88 %	238.2 V ... 249.3 V		max. 2.002 s
	110 %	299.2 V ... 310.2 V		max. 1.001 s
	120 %	326.9 V ... 337.9 V		max. 0.1602 s

* The intervals result from the measuring accuracies listed below.

Manufacturer's accuracies:

Trip limit accuracy: ±2 % of nominal grid voltage

Trip time accuracy: ±0.1 % of nominal trip time

Trip frequency accuracy: ±0.1 % of nominal frequency

11.9 Torque values and wire sizes

Terminal	Torque	Wire size
Grey AC & DC terminal blocks (Weidmüller) inverter	18 in-lbs. (2 Nm)	10 ... 6 AWG
Green AC & DC terminal blocks (Phoenix) inverter	40 in-lbs. (4.5 Nm)	8 ... 6 AWG
	22 in-lbs. (2.5 Nm)	10 AWG
Grey AC configuration terminal blocks for unused wires (Weidmüller)	11in-lbs. (1.2 Nm)	–
Green AC configuration terminal blocks for unused wires (Phoenix)	15 in-lbs. (1.7 Nm)	–
AC & DC terminal blocks SMA DC Disconnect	15 in-lbs. (1.7 Nm)	10 ... 6 AWG
Combined terminal block SMA DC Disconnect	Spring Terminal	10 ... 6 AWG
Grounding electrode conductor terminal block SMA DC Disconnect	15 in-lbs. (1.7 Nm)	10 ... 6 AWG
Screws for fastening the Sunny Boy and the SMA DC Disconnect to the wall mounting bracket and closing the SMA DC Disconnect cover	44 in-lbs. (5 Nm)	–
Lid screws	53 in-lbs. (6 Nm)	–

12 Accessories

You will find the corresponding accessories and replacement parts for your product in the following overview. If needed, you can order these from SMA or your SMA dealer.

Name	Brief description	SMA order number
Power Balancer set	Upgrade kit for the Power Balancer function	PBL-SBUS-10-NR
RS485 upgrade kit	RS485 interface	485USPB-SMC-NR
Bluetooth upgrade set	*Bluetooth* communication interface	BTPBINV-NR
Air grills	Air grill set "right and left" as replacement part	45-7202
AC varistors	AC varistor replacement kit	SB-VAC-US01

13 Contact

If you have technical problems concerning our products, contact the SMA Serviceline. We require the following information in order to provide you with the necessary assistance:

- Type of inverter, if applicable
- Type and number of modules connected, if applicable
- Communication method, where necessary
- Sunny Boy failure or warning number
- Display message of the Sunny Boy

SMA Solar Technology America, LLC

6020 West Oaks Blvd

Rocklin, CA 95765

Tel. +1 916 625 0870

Tel. +1 877-MY SMA TECH

Tel. +1 877 697 6283 (Toll free, available for USA, Canada and Puerto Rico)

Fax +1 916 625 0871

Service@SMA-America.com

www.SMA-America.com

SMA America Production, LLC

www.SMA-America.com

Actiontec® Creative Solutions for the Digital Life™

MegaPlug™ 85 Mbps Ethernet Adapter

Model# HPE100T

Actiontec's new MegaPlug™ 85 Mbps Ethernet Adapter ups the ante for ease of use and network expandability. Just plug a MegaPlug Ethernet Adapter in any 2- or 3-prong electrical outlet in one room of your house, and another MegaPlug Adapter in any power outlet, and you've got instant network access across your power lines. What could be easier? If you need a simple way to extend your home network, the MegaPlug 85 Mbps Ethernet Adapter is the quickest and most economical way to do it.

Networking Made Easy

Nothing could be easier than creating a network connection with a pair of MegaPlug Ethernet Adapters. Instead of stringing unsightly Ethernet cables all over your house, the Adapters use your home's already installed and hidden power lines to transfer data at up to 85 Mbps, making every available electrical outlet a potential network connection. Your networking possibilities are suddenly endless!

Broad Compatibility and More

Use the MegaPlug 85 Mbps Ethernet Adapter to link your computers together, install a networked printer, or connect another device (scanner, networkable hard drive, etc.) to your network. The Ethernet Adapter even works with all popular gaming consoles, so playing networked games is a breeze. Integrated QoS (Quality of Service) is also included, ensuring smooth data transfers.

Features

- No new cables required. Uses your existing power lines.
- Very Easy to Use…Simply plug in
- Compatible with any Router or Gateway
- Supports HomePlug speeds up to 85 Mbps
- Integrated QoS
- Perfect for gaming! Use with any Gaming Console.
- Secure data encryption

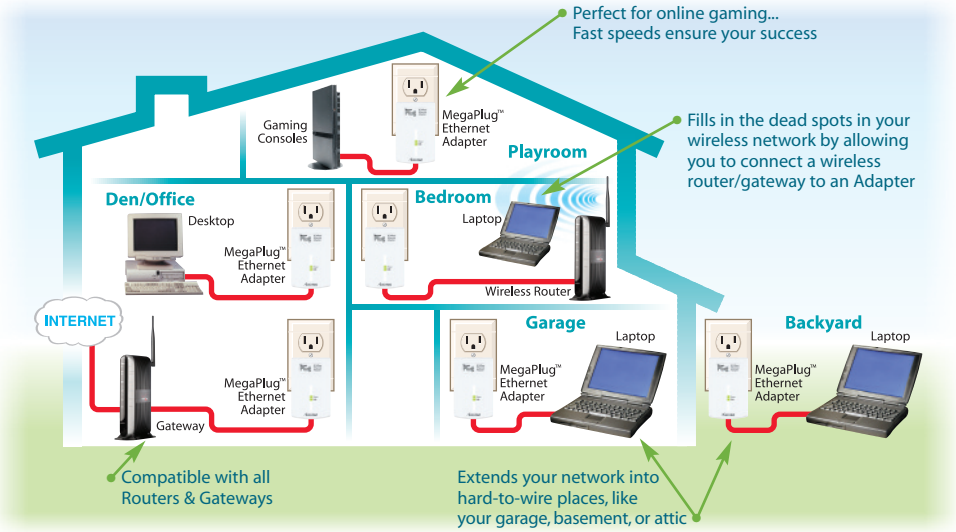

www.actiontec.com

MegaPlug™ 85 Mbps Ethernet Adapter

Technical Specifications

Standards	IEEE 802.3, HomePlug Turbo Powerline Specification 1.0.1
Additional Protocols	Forward Error Correction (FEC) Automatic Channel Adaptation
Data Rate	Up to 85 Mbps over standard home power lines
Operating Range	Up to 300 meters in wall power lines Capable of passing through circuit breakers
Security	56-bit DES Data Encryption
Frequency Band	4.3 MHz – 20.9 MHz
Modulation	OFDM Symbol Modulation DQPSK DBPSK ROBO Carrier Modulation
QoS	Integrated Prioritized Random Access Contention-Free Access Segment Bursting
LEDs	Power, Link
Power Input	100 to 240V @ 50/60 Hz internal
Regulatory Compliance	FCC Part 15 Class B UL
Environmental Ranges	Temperature: 0°C to 40°C Humidity: 10% to 90% (Non-condensing)
Warranty	Limited 1 Year Warranty

Minimum System Requirements

- Router, Gateway, or other device with HomePlug capability
- Microsoft Windows 2000, XP or Vista
- TCP/IP Network Protocol Installed
- Internet Explorer 4.0+ or Netscape 4.0+

Package Contents

- MegaPlug™ 85 Mbps Ethernet Adapter
- Quick Start Guide
- Installation CD
- User Manual on CD
- Ethernet Cable

Corporate Office

760 N. Mary Avenue, Sunnyvale, CA 94085

Main: (408) 752-7700
Sales Info: (800) 797-7001
Fax: (408) 541-9003
Tech Support: (888) 436-0657
Tech Support Fax: (719) 522-9421
Internet: www.actiontec.com

© 2007 Actiontec Electronics, Inc.

Actiontec, Actiontec Installation Buddy, Connection 1-2-3, *Creative Solutions for the Digital Life*, Actiontec Digital Gear, the Actiontec logo, MegaPlug, and the MegaPlug logo are trademarks or registered trademarks of Actiontec Electronics, Inc. All other names are properties of their respective owners.

Product photo may differ from actual product, however functionality remains as stated above.

Specifications are subject to change without notice.

eGauge

capture your footprint [tread lightly]

REAL-TIME WEB-BASED ENERGY MONITOR FOR RENEWABLE ENERGY BUILDING DEMAND AND SUB LOADS

RECOGNIZED COMPONENT
Intertek 4000691

CONFORMS TO UL STD 61010-1

CERTIFIED TO CAN/CSA STD C22.2 No. 61010-1

Key Features and Benefits

- Measures electric AC power on up to 12 circuits:
  - building-demand/consumption
  - renewable energy production (e.g., PV solar, wind)
  - individual appliances, such as geothermal pumps, AC, fridge
- Built-in web server
- Fully web-configurable
- Built-in solid-state memory retains up to 30 years of data
- Internet-enabled but can also operate autonomously without Internet
- Free life-time firmware upgrades
- No service contracts
- No maintenance
- No batteries to replace
- Windows, Mac, Linux, & smart-phone compatible
- For residential, commercial, municipal, and industrial use
- Google PowerMeter-enabled
- BACnet compatible
- FCC and UL-61010 compliant
- Lead-free and RoHS-compliant
- See real time devices at www.egauge.net/devices/
- Made in USA

www.egauge.net
sales@egauge.net
877 342 8431

REQUIREMENTS

- HomePlug within ~100ft of main unit
- Compatible web browser:
  - Google Chrome
  - Firefox 2+
  - Safari 3.1+
  - Internet Explorer 7+
  - Any other browser with JavaScript and SVG or Canvas support
- For Internet-connected operation:
  - ≥256 Kbps upload speed

General

Power usage: 3W typical
Warranty: 3 month or 5 year

Measurement Capacity

Voltage:
3 channels, 85-277V (L1),
0-277V (L2, L3)
Current:
12 channels
Power: any voltage/current combination

Environmental Conditions

Operating temp: -30°C – 50°C
(-22°F – 122°F)
Max altitude: 4000m (13,000ft)
Max humidity: 80% up to 31°C,
derated to 50% at 40°C
Meas. Category: III (fixed installation)
Location: indoor or
outdoor (in enclosure)
Max. Pollution degree: 2

Enclosure

Material:
flame-retardant ABS (UL94-V0)
Size: 176×85×30mm3 (7"×3.4"×1.2")
Weight: 220g (8oz)

Regulatory

Safety: Conforms to UL STD 61010-1
Certified to CAN/CSA STD C22.2
No. 61010-1
(ETL report #100097614DEN-001)
FCC: CISPR 11 Group 1 class B
FCC 47CFR part 15 class B
(ETL report #100036440DEN-001)
FCC (BPL): FCC Docket No. 04-37
(ETL report #31800770DEN-001)

eGuard Manager

- Allows installers to view multiple systems on one screen
- Email alerts when system is off line or when installer parameters are triggered
- Proactive customer service tool for trouble shooting and performance verification
- Allows for monthly billing and PPA contacts

						Average Power [W]							
						Since midnight		Last 24hrs		Week		Month	
Name	Con	Avail	Tmp	TX	Rev	Gen	Use	Gen	Use	Gen	Use	Gen	Use
David	●	100%	52°C	11.3	0.75	172	1150	864	1096	1063	1143	1213	1193
PVfarm	●	100%	42°C	9.2	0.75	338	978	1079	1041	1075	948	1105	1146
eGauge1	●	100%	0°C	4.8	0.76	73	1151	737	1349	673	1370	697	1391
eGauge2	●	100%	0°C	7.0	0.68	n/a	972	n/a	1143	n/a	1234	n/a	1289
eGauge4	●	100%	43°C		0.60	551	8730	2189	11817	1921	9886	1913	10817
eGauge5	●	98%	39°C	11.3	0.74	n/a	n/a	n/a	n/a	n/a	n/a	n/a	n/a
eGauge6	●	0%	48°C	7.9	0.73	n/a	562	n/a	1689	n/a	1273	n/a	1121
eGauge7	●	94%	35°C		0.56	n/a	n/a	n/a	n/a	n/a	n/a	n/a	n/a

eGauge

capture your footprint [tread lightly]

www.egauge.net
sales@egauge.net
877 342 8431

ALL RIGHTS RESERVED. NO PORTION OF THIS PUBLICATION, WHETHER IN WHOLE OR IN PART CAN BE REPRODUCED WITHOUT THE EXPRESS WRITTEN CONSENT OF SPC TECHNOLOGY.

REVISIONS			DOC. NO. SPC-FD05 * Effective: 12/21/98 * DCP No: 880					
DCP #	REV	DESCRIPTION	DRAWN	DATE	CHECKD	DATE	APPRVD	DATE
	A	RELEASED	RGA				D.D.	8/18/86
1134	B	UPDATED WAS IN SMS**	HYO	3/23/01	JC	7/13/01	JC	7/13/01

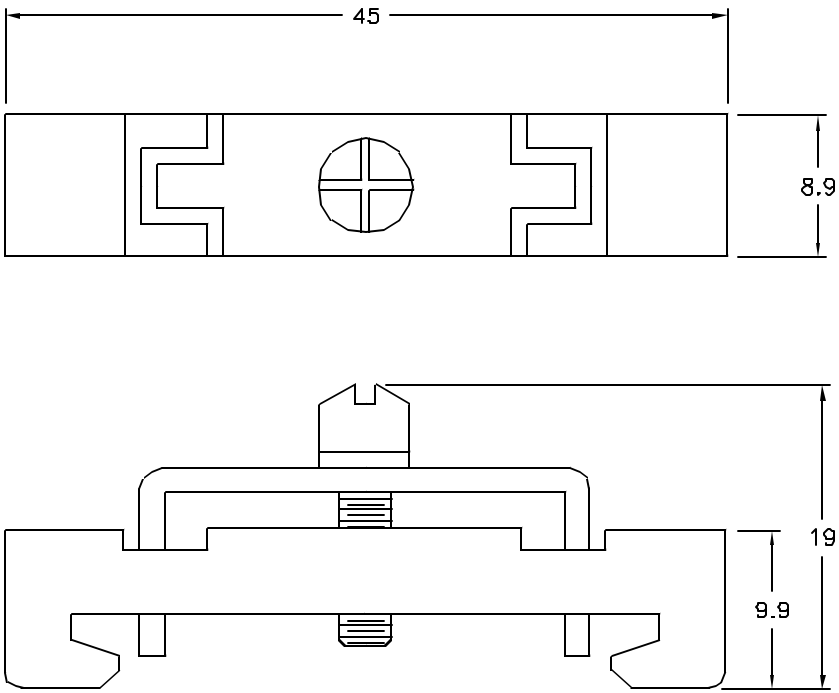

Material: Bichromated Steel

DISCLAIMER:
ALL STATEMENTS AND TECHNICAL INFORMATION CONTAINED HEREIN ARE BASED UPON INFORMATION AND/OR TESTS WE BELIEVE TO BE ACCURATE AND RELIABLE. SINCE CONDITIONS OF USE ARE BEYOND OUR CONTROL, THE USER SHALL DETERMINE THE SUITABILITY OF THE PRODUCT FOR THE INTENDED USE AND ASSUME ALL RISK AND LIABILITY WHATSOEVER IN CONNECTION THEREWITH.

UNLESS OTHERWISE SPECIFIED, DIMENSIONS ARE FOR REFERENCE PURPOSES ONLY.

DRAWN BY:	DATE:
RGA	
CHECKED BY:	DATE:
APPROVED BY:	DATE:
D.D.	8/18/86

SPC TECHNOLOGY

DRAWING TITLE: DIN RAIL CLIP

SIZE	DWG. NO.	ELECTRONIC FILE	REV
A	SMS-EC	46N7410.DWG	B

SCALE: NTS | U.O.M.: MILLIMETERS | SHEET: 1 OF 1

SPC-FD05.DWG

IBTB

INTERSYSTEM BONDING TERMINATION

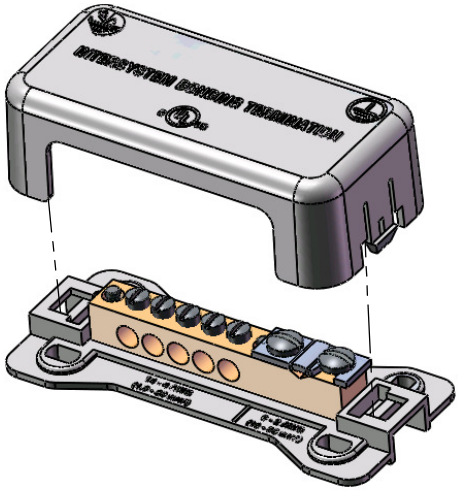

Example of Intersystem Bonding Termination Installation- Residential Service

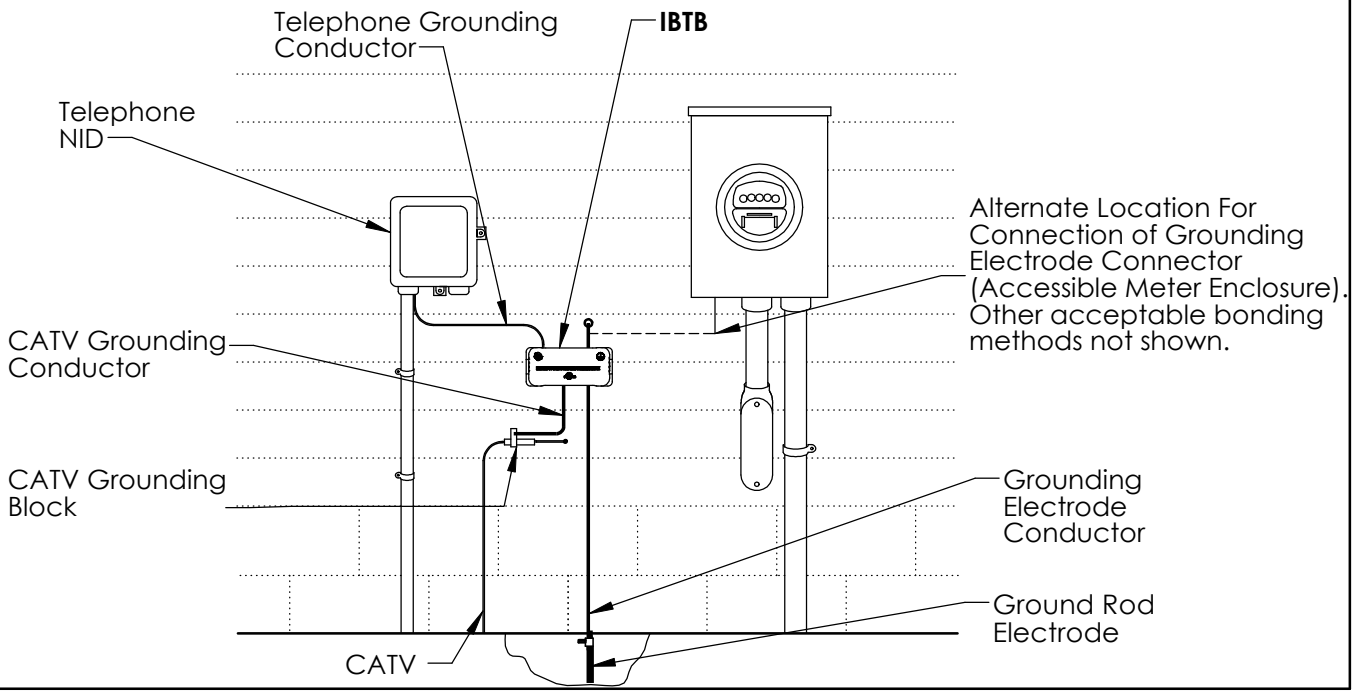

Note:
Intersystem Bonding Termination is also used to bond grounding conductors from television and radio antennas, satellite dish cable, antenna discharge units and lightning protection systems.

Warning:
1. Do not disconnect the electrical service grounding conductors while the system is energized.
2. Follow all local electrical codes as required by Authority Having Jurisdiction.

WARNING:
1. ERICO products shall be installed and used only as indicated in ERICO product instruction sheets and training materials. Instruction sheets are available at www.erico.com and from your ERICO customer service representative.
2. ERICO products must never be used for a purpose other than the purpose for which they were designed or in a manner that exceeds specified load ratings.
3. All instructions must be completely followed to ensure proper and safe installation and performance.
4. Improper installation, misuse, misapplication or other failure to completely follow ERICO's instructions and warnings may cause product malfunction, property damage, serious bodily injury and death.

The customer is responsible for:
a. Conformance to all governing codes.
b. The integrity of structures to which the products are attached, including their capability of safely accepting the loads imposed, as evaluated by a qualified engineer.
c. Using appropriate industry standard hardware as noted above.

SAFETY INSTRUCTIONS:
All governing codes and regulations and those required by the job site must be observed.
Always use appropriate safety equipment such as eye protection, hard hat, and gloves as appropriate to the application.

UL is a registered trademark of Underwriters Laboratories, Inc.

CADDY, CADWELD, CRITEC, ERICO, ERIFLEX, ERITECH, and LENTON are registered trademarks of ERICO International Corporation.

©2009 ERICO International Corporation

INSTALLATION:

#1

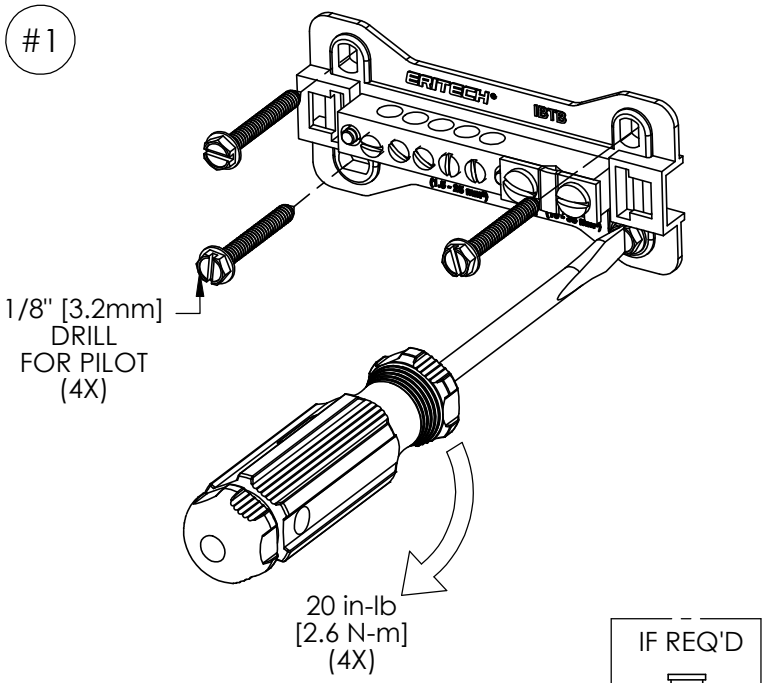

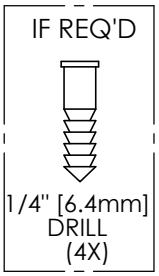

NOTE 1: Mounting hardware and anchors included.

#2

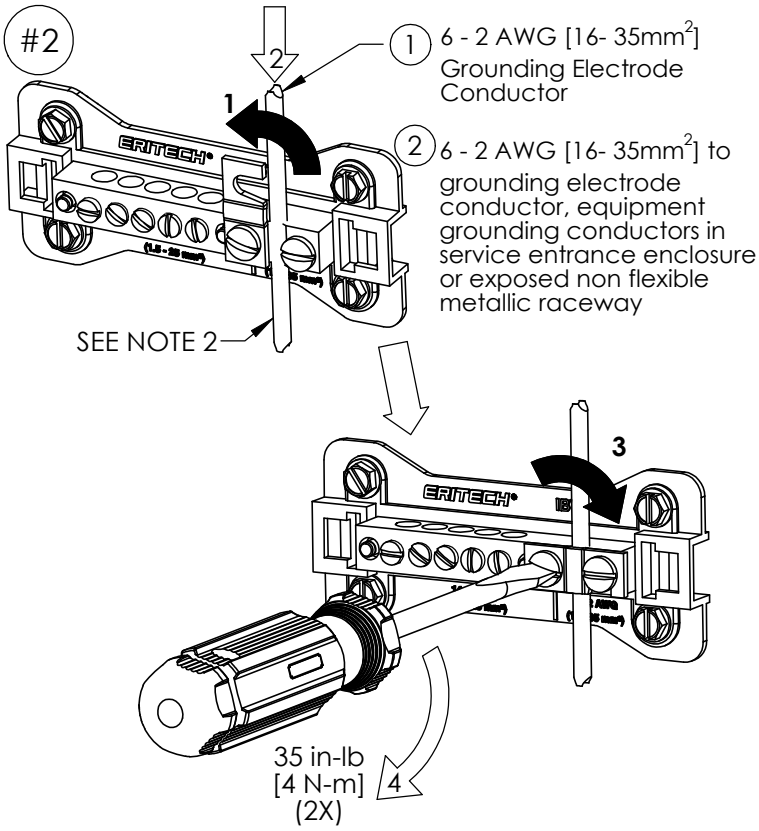

NOTE 2: UL Listed for 6 - 2 AWG Solid and 6 AWG Stranded

#3

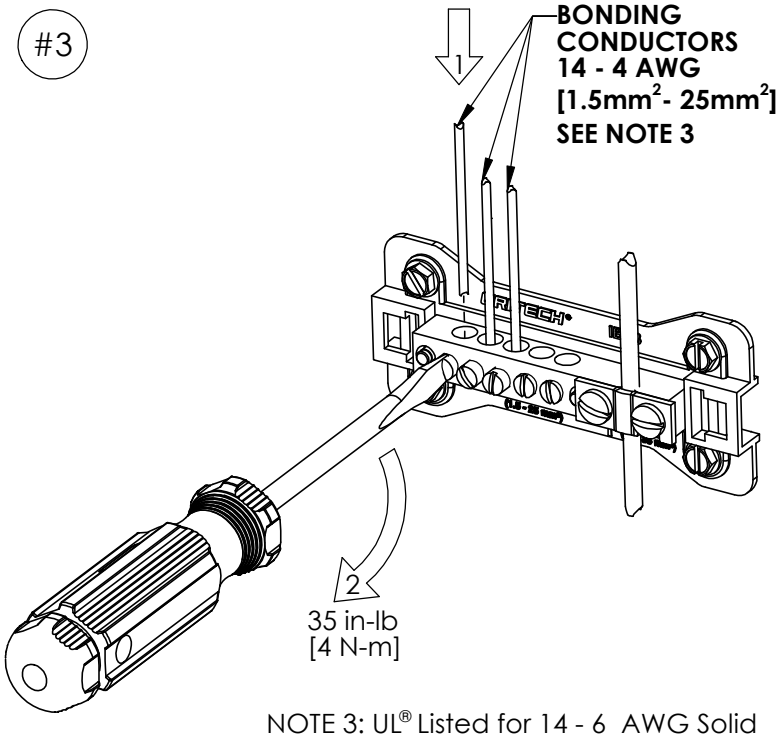

NOTE 3: UL® Listed for 14 - 6 AWG Solid and 14 - 4 AWG Stranded

NOTE 4: Torque value for 6 AWG Solid [16mm²] is 40 in-lb [4.5 n-m]

#4

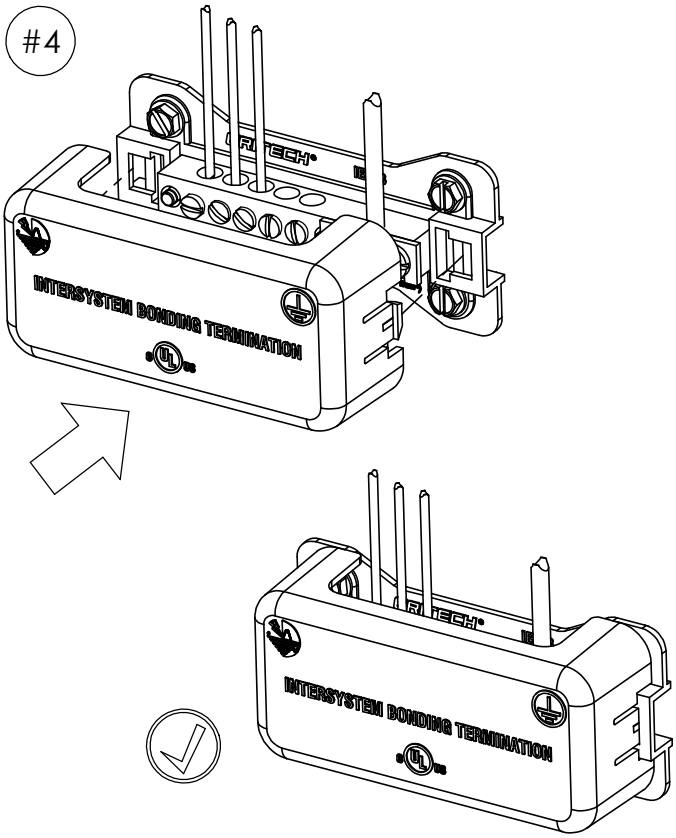

© 2009 ERICO International Corporation

Arduino UNO

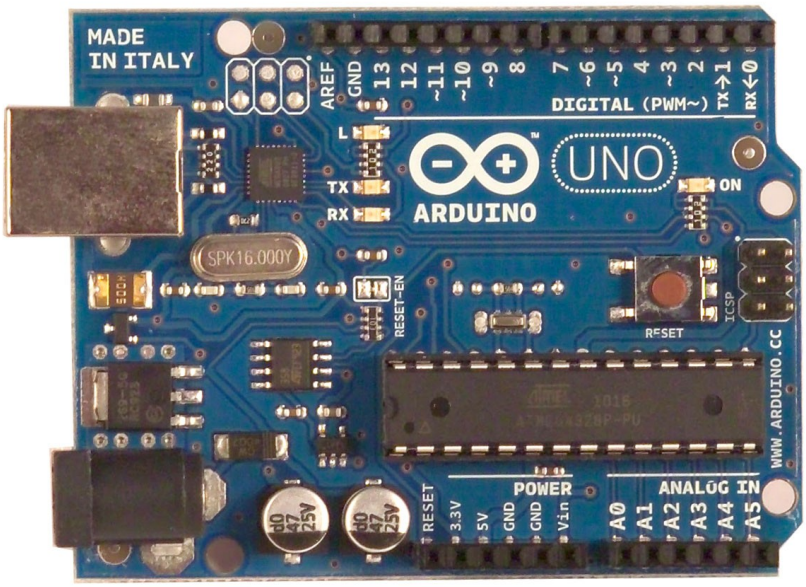

Product Overview

The Arduino Uno is a microcontroller board based on the ATmega328 (datasheet). It has 14 digital input/output pins (of which 6 can be used as PWM outputs), 6 analog inputs, a 16 MHz crystal oscillator, a USB connection, a power jack, an ICSP header, and a reset button. It contains everything needed to support the microcontroller; simply connect it to a computer with a USB cable or power it with a AC-to-DC adapter or battery to get started. The Uno differs from all preceding boards in that it does not use the FTDI USB-to-serial driver chip. Instead, it features the Atmega8U2 programmed as a USB-to-serial converter.

"Uno" means one in Italian and is named to mark the upcoming release of Arduino 1.0. The Uno and version 1.0 will be the reference versions of Arduno, moving forward. The Uno is the latest in a series of USB Arduino boards, and the reference model for the Arduino platform; for a comparison with previous versions, see the index of Arduino boards.

Index

Technical Specifications — Page 2

How to use Arduino
Programming Enviroment, Basic Tutorials — Page 6

Terms & Conditions — Page 7

Enviromental Policies
half sqm of green via Impatto Zero® — Page 7

Technical Specification

EAGLE files: arduino-duemilanove-uno-design.zip Schematic: arduino-uno-schematic.pdf

Summary

Microcontroller	ATmega328
Operating Voltage	5V
Input Voltage (recommended)	7-12V
Input Voltage (limits)	6-20V
Digital I/O Pins	14 (of which 6 provide PWM output)
Analog Input Pins	6
DC Current per I/O Pin	40 mA
DC Current for 3.3V Pin	50 mA
Flash Memory	32 KB of which 0.5 KB used by bootloader
SRAM	2 KB
EEPROM	1 KB
Clock Speed	16 MHz

the board

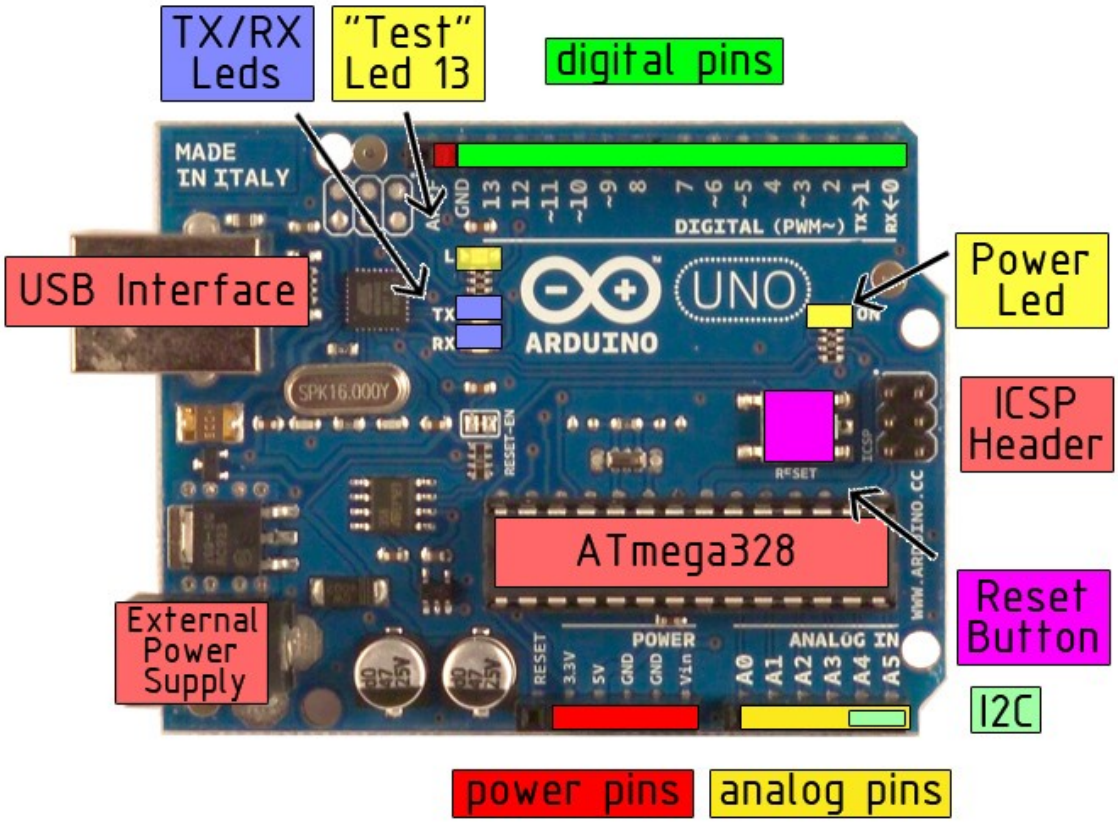

Power

The Arduino Uno can be powered via the USB connection or with an external power supply. The power source is selected automatically.

External (non-USB) power can come either from an AC-to-DC adapter (wall-wart) or battery. The adapter can be connected by plugging a 2.1mm center-positive plug into the board's power jack. Leads from a battery can be inserted in the Gnd and Vin pin headers of the POWER connector.

The board can operate on an external supply of 6 to 20 volts. If supplied with less than 7V, however, the 5V pin may supply less than five volts and the board may be unstable. If using more than 12V, the voltage regulator may overheat and damage the board. The recommended range is 7 to 12 volts.

The power pins are as follows:

- **VIN.** The input voltage to the Arduino board when it's using an external power source (as opposed to 5 volts from the USB connection or other regulated power source). You can supply voltage through this pin, or, if supplying voltage via the power jack, access it through this pin.
- **5V.** The regulated power supply used to power the microcontroller and other components on the board. This can come either from VIN via an on-board regulator, or be supplied by USB or another regulated 5V supply.
- **3V3.** A 3.3 volt supply generated by the on-board regulator. Maximum current draw is 50 mA.
- **GND.** Ground pins.

Memory

The Atmega328 has 32 KB of flash memory for storing code (of which 0,5 KB is used for the bootloader); It has also 2 KB of SRAM and 1 KB of EEPROM (which can be read and written with the EEPROM library).

Input and Output

Each of the 14 digital pins on the Uno can be used as an input or output, using pinMode(), digitalWrite(), and digitalRead() functions. They operate at 5 volts. Each pin can provide or receive a maximum of 40 mA and has an internal pull-up resistor (disconnected by default) of 20-50 kOhms. In addition, some pins have specialized functions:

- **Serial: 0 (RX) and 1 (TX).** Used to receive (RX) and transmit (TX) TTL serial data. TThese pins are connected to the corresponding pins of the ATmega8U2 USB-to-TTL Serial chip .
- **External Interrupts: 2 and 3.** These pins can be configured to trigger an interrupt on a low value, a rising or falling edge, or a change in value. See the attachInterrupt() function for details.
- **PWM: 3, 5, 6, 9, 10, and 11.** Provide 8-bit PWM output with the analogWrite() function.
- **SPI: 10 (SS), 11 (MOSI), 12 (MISO), 13 (SCK).** These pins support SPI communication, which, although provided by the underlying hardware, is not currently included in the Arduino language.

- **LED: 13.** There is a built-in LED connected to digital pin 13. When the pin is HIGH value, the LED is on, when the pin is LOW, it's off.

The Uno has 6 analog inputs, each of which provide 10 bits of resolution (i.e. 1024 different values). By default they measure from ground to 5 volts, though is it possible to change the upper end of their range using the AREF pin and the analogReference() function. Additionally, some pins have specialized functionality:

- **I^2C: 4 (SDA) and 5 (SCL).** Support I^2C (TWI) communication using the Wire library.

There are a couple of other pins on the board:

- **AREF.** Reference voltage for the analog inputs. Used with analogReference().
- **Reset.** Bring this line LOW to reset the microcontroller. Typically used to add a reset button to shields which block the one on the board.

See also the mapping between Arduino pins and Atmega328 ports.

Communication

The Arduino Uno has a number of facilities for communicating with a computer, another Arduino, or other microcontrollers. The ATmega328 provides UART TTL (5V) serial communication, which is available on digital pins 0 (RX) and 1 (TX). An ATmega8U2 on the board channels this serial communication over USB and appears as a virtual com port to software on the computer. The '8U2 firmware uses the standard USB COM drivers, and no external driver is needed. However, on Windows, an *.inf file is required..

The Arduino software includes a serial monitor which allows simple textual data to be sent to and from the Arduino board. The RX and TX LEDs on the board will flash when data is being transmitted via the USB-to-serial chip and USB connection to the computer (but not for serial communication on pins 0 and 1).

A SoftwareSerial library allows for serial communication on any of the Uno's digital pins.

The ATmega328 also support I2C (TWI) and SPI communication. The Arduino software includes a Wire library to simplify use of the I2C bus; see the documentation for details. To use the SPI communication, please see the ATmega328 datasheet.

Programming

The Arduino Uno can be programmed with the Arduino software (download). Select "Arduino Uno w/ ATmega328" from the **Tools > Board** menu (according to the microcontroller on your board). For details, see the reference and tutorials.

The ATmega328 on the Arduino Uno comes preburned with a bootloader that allows you to upload new code to it without the use of an external hardware programmer. It communicates using the original STK500 protocol (reference, C header files).

You can also bypass the bootloader and program the microcontroller through the ICSP (In-Circuit Serial Programming) header; see these instructions for details.

The ATmega8U2 firmware source code is available . The ATmega8U2 is loaded with a DFU bootloader, which can be activated by connecting the solder jumper on the back of the board (near the map of Italy) and then resetting the 8U2. You can then use Atmel's FLIP software (Windows) or the DFU programmer (Mac OS X and Linux) to load a new firmware. Or you can use the ISP header with an external programmer (overwriting the DFU bootloader).

radiospares RADIONICS ALLIED ELECTRONICS

Automatic (Software) Reset

Rather than requiring a physical press of the reset button before an upload, the Arduino Uno is designed in a way that allows it to be reset by software running on a connected computer. One of the hardware flow control lines (DTR) of the ATmega8U2 is connected to the reset line of the ATmega328 via a 100 nanofarad capacitor. When this line is asserted (taken low), the reset line drops long enough to reset the chip. The Arduino software uses this capability to allow you to upload code by simply pressing the upload button in the Arduino environment. This means that the bootloader can have a shorter timeout, as the lowering of DTR can be well-coordinated with the start of the upload.

This setup has other implications. When the Uno is connected to either a computer running Mac OS X or Linux, it resets each time a connection is made to it from software (via USB). For the following half-second or so, the bootloader is running on the Uno. While it is programmed to ignore malformed data (i.e. anything besides an upload of new code), it will intercept the first few bytes of data sent to the board after a connection is opened. If a sketch running on the board receives one-time configuration or other data when it first starts, make sure that the software with which it communicates waits a second after opening the connection and before sending this data.

The Uno contains a trace that can be cut to disable the auto-reset. The pads on either side of the trace can be soldered together to re-enable it. It's labeled "RESET-EN". You may also be able to disable the auto-reset by connecting a 110 ohm resistor from 5V to the reset line; see this forum thread for details.

USB Overcurrent Protection

The Arduino Uno has a resettable polyfuse that protects your computer's USB ports from shorts and overcurrent. Although most computers provide their own internal protection, the fuse provides an extra layer of protection. If more than 500 mA is applied to the USB port, the fuse will automatically break the connection until the short or overload is removed.

Physical Characteristics

The maximum length and width of the Uno PCB are 2.7 and 2.1 inches respectively, with the USB connector and power jack extending beyond the former dimension. Three screw holes allow the board to be attached to a surface or case. Note that the distance between digital pins 7 and 8 is 160 mil (0.16"), not an even multiple of the 100 mil spacing of the other pins.

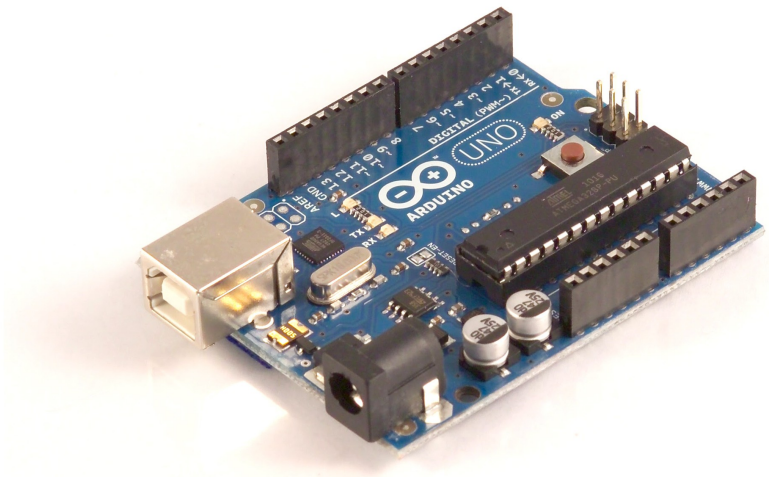

radiospares RADIONICS ALLIED ELECTRONICS

How to use Arduino

Arduino can sense the environment by receiving input from a variety of sensors and can affect its surroundings by controlling lights, motors, and other actuators. The microcontroller on the board is programmed using the Arduino programming language (based on Wiring) and the Arduino development environment (based on Processing). Arduino projects can be stand-alone or they can communicate with software on running on a computer (e.g. Flash, Processing, MaxMSP).

Arduino is a cross-platoform program. You'll have to follow different instructions for your personal OS. Check on the Arduino site for the latest instructions. *http://arduino.cc/en/Guide/HomePage*

Linux Install

Windows Install

Mac Install

Once you have downloaded/unzipped the arduino IDE, you can Plug the Arduino to your PC via USB cable.

Blink led

Now you're actually ready to "burn" your first program on the arduino board. To select "blink led", the physical translation of the well known programming "hello world", select

File>Sketchbook>
Arduino-0017>Examples>
Digital>Blink

Once you have your skecth you'll see something very close to the screenshot on the right.

In **Tools>Board** select

Now you have to go to
Tools>SerialPort
and select the right serial port, the one arduino is attached to.

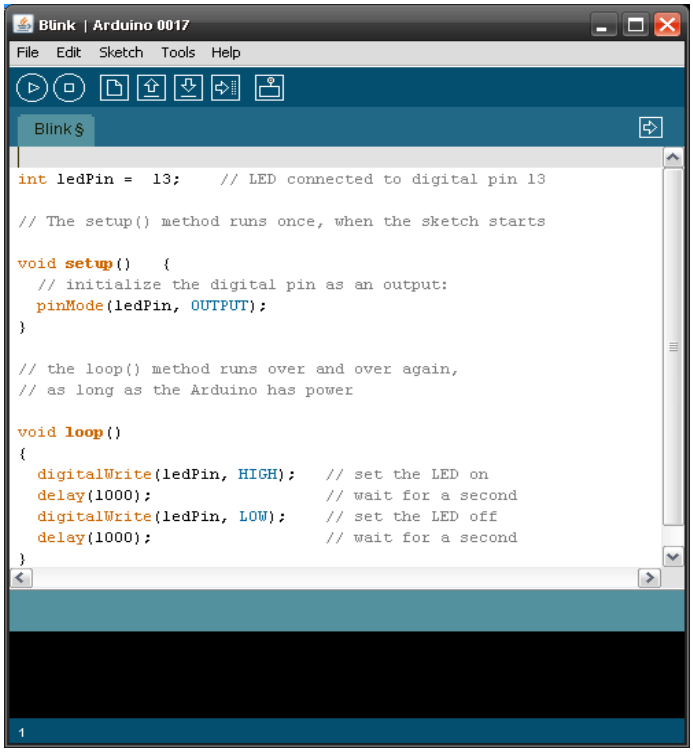

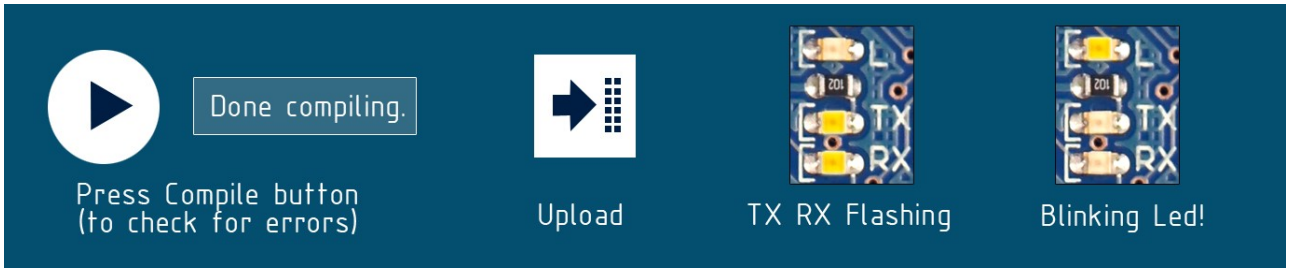

Dimensioned Drawing

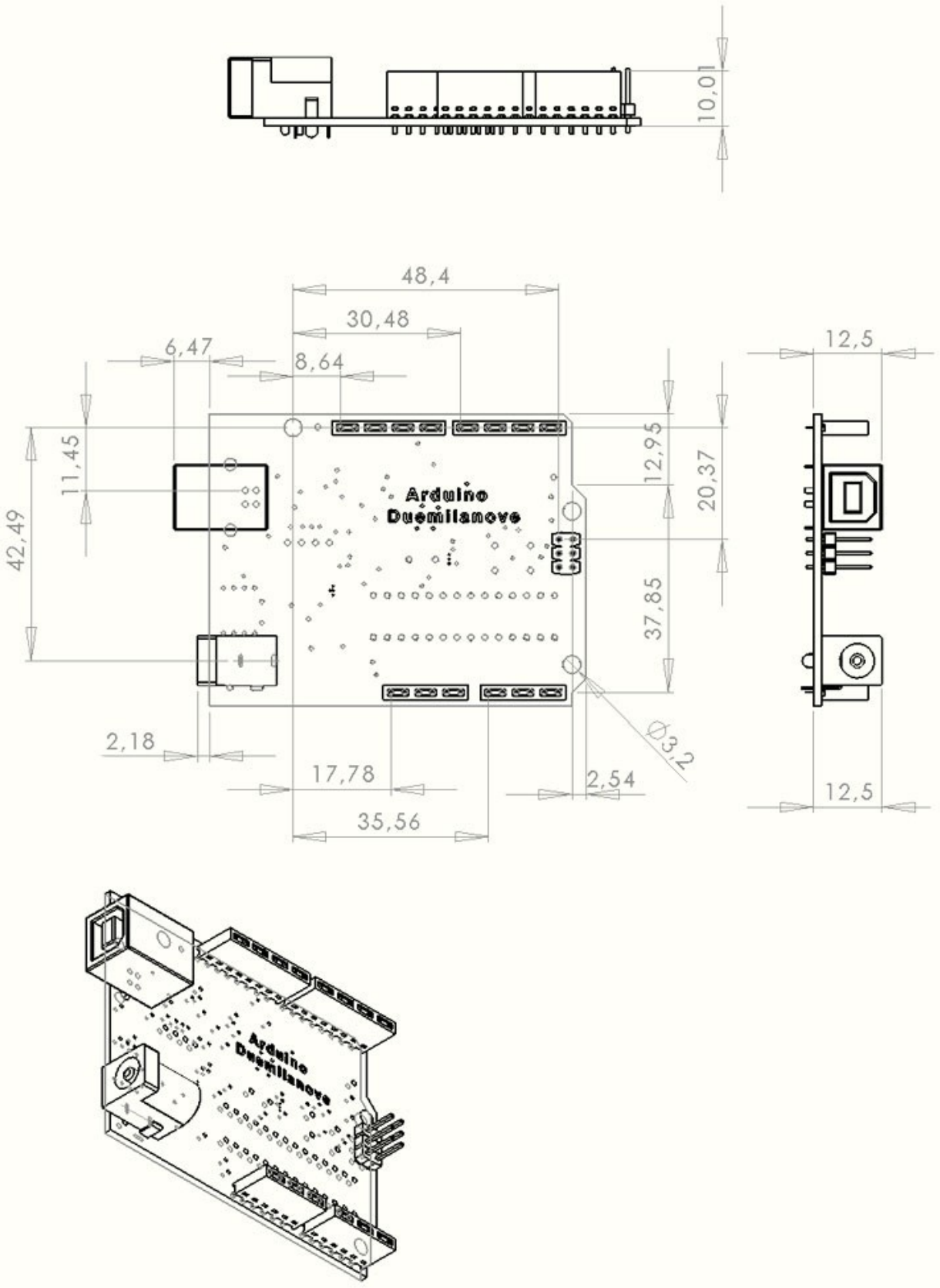

radiospares RADIONICS ALLIED ELECTRONICS

Terms & Conditions

1. Warranties

1.1 The producer warrants that its products will conform to the Specifications. This warranty lasts for one (1) years from the date of the sale. The producer shall not be liable for any defects that are caused by neglect, misuse or mistreatment by the Customer, including improper installation or testing, or for any products that have been altered or modified in any way by a Customer. Moreover, The producer shall not be liable for any defects that result from Customer's design, specifications or instructions for such products. Testing and other quality control techniques are used to the extent the producer deems necessary.

1.2 If any products fail to conform to the warranty set forth above, the producer's sole liability shall be to replace such products. The producer's liability shall be limited to products that are determined by the producer not to conform to such warranty. If the producer elects to replace such products, the producer shall have a reasonable time to replacements. Replaced products shall be warranted for a new full warranty period.

1.3 EXCEPT AS SET FORTH ABOVE, PRODUCTS ARE PROVIDED "AS IS" AND "WITH ALL FAULTS." THE PRODUCER DISCLAIMS ALL OTHER WARRANTIES, EXPRESS OR IMPLIED, REGARDING PRODUCTS, INCLUDING BUT NOT LIMITED TO, ANY IMPLIED WARRANTIES OF MERCHANTABILITY OR FITNESS FOR A PARTICULAR PURPOSE

1.4 Customer agrees that prior to using any systems that include the producer products, Customer will test such systems and the functionality of the products as used in such systems. The producer may provide technical, applications or design advice, quality characterization, reliability data or other services. Customer acknowledges and agrees that providing these services shall not expand or otherwise alter the producer's warranties, as set forth above, and no additional obligations or liabilities shall arise from the producer providing such services.

1.5 The Arduino™ products are not authorized for use in safety-critical applications where a failure of the product would reasonably be expected to cause severe personal injury or death. Safety-Critical Applications include, without limitation, life support devices and systems, equipment or systems for the operation of nuclear facilities and weapons systems. Arduino™ products are neither designed nor intended for use in military or aerospace applications or environments and for automotive applications or environment. Customer acknowledges and agrees that any such use of Arduino™ products which is solely at the Customer's risk, and that Customer is solely responsible for compliance with all legal and regulatory requirements in connection with such use.

1.6 Customer acknowledges and agrees that it is solely responsible for compliance with all legal, regulatory and safety-related requirements concerning its products and any use of Arduino™ products in Customer's applications, notwithstanding any applications-related information or support that may be provided by the producer.

2. Indemnification

The Customer acknowledges and agrees to defend, indemnify and hold harmless the producer from and against any and all third-party losses, damages, liabilities and expenses it incurs to the extent directly caused by: (i) an actual breach by a Customer of the representation and warranties made under this terms and conditions or (ii) the gross negligence or willful misconduct by the Customer.

3. Consequential Damages Waiver

In no event the producer shall be liable to the Customer or any third parties for any special, collateral, indirect, punitive, incidental, consequential or exemplary damages in connection with or arising out of the products provided hereunder, regardless of whether the producer has been advised of the possibility of such damages. This section will survive the termination of the warranty period.

4. Changes to specifications

The producer may make changes to specifications and product descriptions at any time, without notice. The Customer must not rely on the absence or characteristics of any features or instructions marked "reserved" or "undefined." The producer reserves these for future definition and shall have no responsibility whatsoever for conflicts or incompatibilities arising from future changes to them. The product information on the Web Site or Materials is subject to change without notice. Do not finalize a design with this information.

Enviromental Policies

The producer of Arduino™ has joined the Impatto Zero® policy of LifeGate.it. For each Arduino board produced is created / looked after half squared Km of Costa Rica's forest's.

Product Detail

QO142M225RB Load Center

LOADCTR QO MB 240V 225A 1PH 42SP NEMA 3R

$1,631.00 List Price

Stock Item: This item is normally stocked in our distribution facility.

Qty. 1 **Add to Cart**

Product Datasheet *<URL: ?event=datasheet&partnumber=QO142M225RB&countrycode=us>*

Product Info **Documents & Downloads**

Features and Specifications

Main Type	Convertible - Factory installed main breaker
Maximum Single Pole Circuits	42
Maximum Tandem Circuit Breakers	0
Phase	1-Phase
Spaces	42
Ampere Rating	225A
Voltage Rating	120/240VAC
Wire Size	#4 to 300 AWG/kcmil(Al/Cu)
Application	Designed to meet residential, commercial and industrial requirements to protect electrical systems, equipment and people.
Wiring Configuration	3-Wire
Depth	4.52 Inches
Approvals	UL Listed
Height	37.98 Inches
Width	14.75 Inches
Cover Type	Surface
Bus Material	Tin Plated Copper
Enclosure Type	Outdoor/Rainproof
Box Number	8R
Enclosure Rating	NEMA 3R
Grounding Bar	Order separately

Short Circuit Current Rating	22kA
Main Type	Convertible - Factory installed main breaker
Maximum Single Pole Circuits	42
Maximum Tandem Circuit Breakers	0
Phase	1-Phase
Spaces	42
Ampere Rating	225A
Voltage Rating	120/240VAC
Wire Size	#4 to 300 AWG/kcmil(Al/Cu)
Application	Designed to meet residential, commercial and industrial requirements to protect electrical systems, equipment and people.
Wiring Configuration	3-Wire
Depth	4.52 Inches
Approvals	UL Listed
Height	37.98 Inches
Width	14.75 Inches
Cover Type	Surface
Bus Material	Tin Plated Copper
Enclosure Type	Outdoor/Rainproof
Box Number	8R
Enclosure Rating	NEMA 3R
Grounding Bar	Order separately
Short Circuit Current Rating	22kA

Notes:
22kA main circuit breaker UL Listed for use ahead of QO, QOT, QO-GFI, QO-AFI, QO-EPD and QO-PL 10kA branch circuit breakers to permit their application on systems up to 22kA available fault current.

Ordering and Shipping Details

Category	00002 - Load Centers, Outdoor, 1 phase 12-42 CKT,NEMA3R
Discount Schedule	DE3A
GTIN	00785901272236
Package Quantity	1
Weight (lbs.)	43.88
Availability Code	Stock Item: This item is normally stocked in our distribution facility.
Returnability	Y

Country of Origin	US

Click here to purchase or view item details

Product Profile

100 Amp 600 Volt 2 Pole Circuit Breaker

Price:	Call for price
Item Code:	999216-NS
Weight:	4.50LB
Manufacturers:	Square D
Model	999216
Categories:	2 Pole
Condition:	New Surplus
Manufacturer List Price:	$172.50

Description

100 Amp 600 Volt 2 Pole Circuit Breaker - New Surplus - Square D Catalog # (999216)

Returns Available/Warranty

Return for credit:	30 Day(s)
Return for refund:	30 Day(s)
Return for repair/replacement:	1 Year(s)

Click here to purchase or view item details

Click here to purchase or view item details

Product Profile

50 Amp 240 Volt 2 Pole Circuit Breaker

Price:	Call for price
Item Code:	992250-NS
Weight:	4.00LB
Manufacturers:	Square D
Model	992250
Categories:	2 Pole
Condition:	New Surplus
Manufacturer List Price:	$57.50

Description

50 Amp 120 Volt 2 Pole Circuit Breaker - New Surplus - Square D Catalog # (992250)

Returns Available/Warranty

Return for credit:	30 Day(s)
Return for refund:	30 Day(s)
Return for repair/replacement:	1 Year(s)

Click here to purchase or view item details

Click here to purchase or view item details

Product Profile

40 Amp 240 Volt 2 Pole Bolt On CB

Price:	Call for price
Item Code:	A1B240-NS
Weight:	1.00LB
Manufacturers:	Square D
Model	A1B240
Categories:	2 Pole
Condition:	New Surplus
Manufacturer List Price:	$115.00

Description

40 Amp 240 Volt 2 Pole Bolt On Circuit Breaker - New Surplus - Square D Catalog # (A1B240)

Returns Available/Warranty

Return for credit:	30 Day(s)
Return for refund:	30 Day(s)
Return for repair/replacement:	1 Year(s)

Click here to purchase or view item details

Click here to purchase or view item details

Product Profile

30 Amp 240 Volt 2 Pole Circuit Breaker

Price:	Call for price
Item Code:	992230-NS
Weight:	4.00LB
Manufacturers:	Square D
Model	992230
Categories:	2 Pole
Condition:	New Surplus
Manufacturer List Price:	$0.00

Description

30 Amp 600 Volt 2 Pole Circuit Breaker - New Surplus - Square D Catalog # (992230)

Returns Available/Warranty

Return for credit:	30 Day(s)
Return for refund:	30 Day(s)
Return for repair/replacement:	1 Year(s)

Click here to purchase or view item details

Click here to purchase or view item details

Product Profile

20 Amp 120 Volt 1 Pole Circuit Breaker

Price:	Call for price
Item Code:	992120-NS
Weight:	4.00LB
Manufacturers:	Square D
Model	992120
Categories:	1 Pole
Condition:	New Surplus
Manufacturer List Price:	$48.00

Description

20 Amp 120 Volt 1 Pole Circuit Breaker - New Surplus - Square D Catalog # (992120)

Returns Available/Warranty

Return for credit:	30 Day(s)
Return for refund:	30 Day(s)
Return for repair/replacement:	1 Year(s)

Click here to purchase or view item details

Click here to purchase or view item details

Product Profile

15 Amp 120 Volt 1 Pole CB Grnd Fault

Price:	Call for price
Item Code:	HOM115GFI-NS
Weight:	0.50LB
Manufacturers:	Square D
Model	HOM115GFI
Categories:	1 Pole
UPC:	785901065364
Condition:	New Surplus
Manufacturer List Price:	$141.00

Description

15 Amp 120 Volt 1 Pole Ground Fault Interrupt Circuit Breaker. For use With Meter Mains and All-In-One devices - New Surplus - Square D Catalog # (HOM115GFI)

Returns Available/Warranty

Return for credit:	30 Day(s)
Return for refund:	30 Day(s)
Return for repair/replacement:	1 Year(s)

Click here to purchase or view item details

LRT-363 AC

SPECIFICATIONS

UL File Numbers

UL and C-UL Listed
UL FILE # E 193999

Available Version

901363040-LRT 363-6-class 2 circuits

Mechanical and Thermal

Dimensions (mm)	43.5 x 120 x 210
Dimensions (in.)	1.7 x 4.72 x 8.27
Weight	35.27ounces/1000 grams
Max. case temp.	90°C
Max. ambient temp.	50°C
Output wire-blue 16 AWG	200°C
Input wire-white/black 18AWG	200°C
Grounding Wire-green 18AWG	200°C
Aluminum inner casing	
Steel outer casing	

Electrical

Load	120-360W
Input	120V 50/60Hz
Output at 360W	11.7V 40kHz
Having 6-60 watt class 2 outputs	
Input current at 360W	3.2A
Output current at 360W	5Ax6
Power factor	0.95
Max. harmonic distortion	13%
Dimmable	

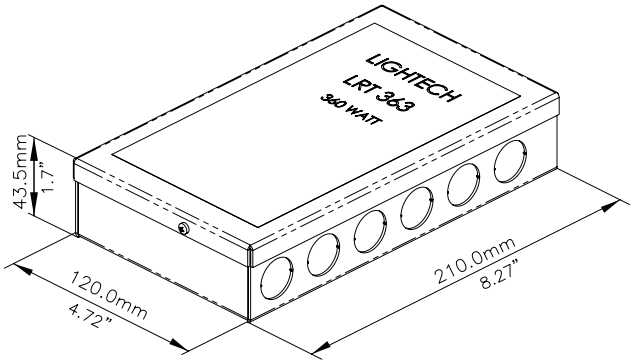

Output Voltage vs. Load at 120V

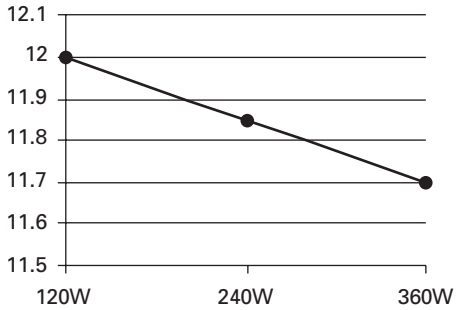

Output vs. Input at Max. Load

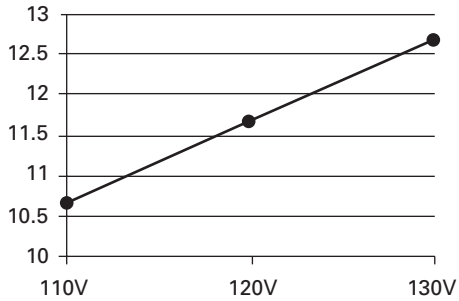

Protection

Auto-reset electronic short circuit and overload protection. Auto-Reset thermal cut-off @ 125C.

See reverse side for more information →

LRT-363 AC

Mounting Instructions

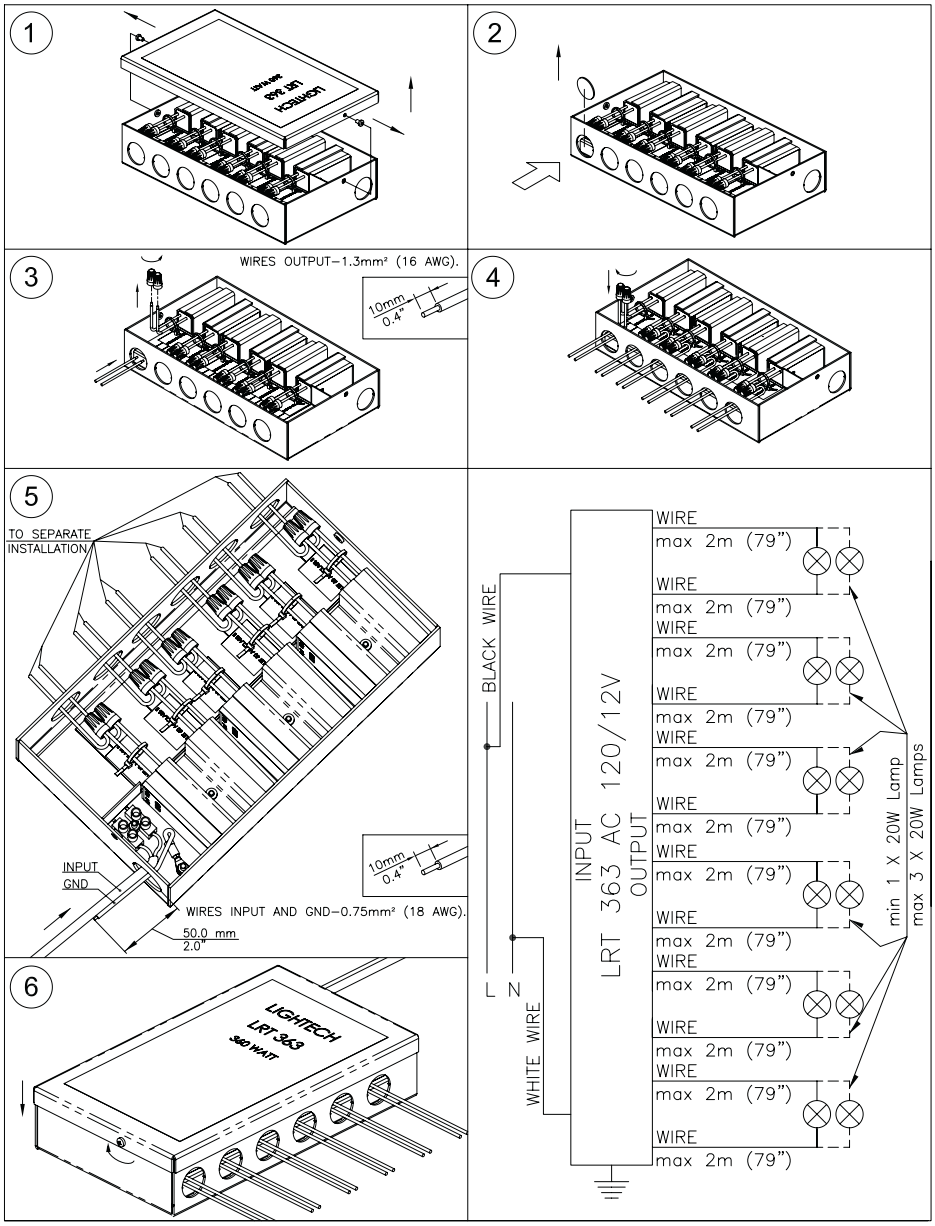

Safety Instructions:

1. Always be sure that LRT is disconnected from 120V line, before installations and removals.
2. Install in accordance with national and local electrical codes.
3. The LRT is designed for up to six separate installations.
4. Any one of the six LRT outputs that are not in use should be covered with the plastic wire nuts (included).
5. Wires:
   Input wires – 0.75mm^2 or 18 AWG
   Output wires – 1.3mm^2 or 16 AWG.