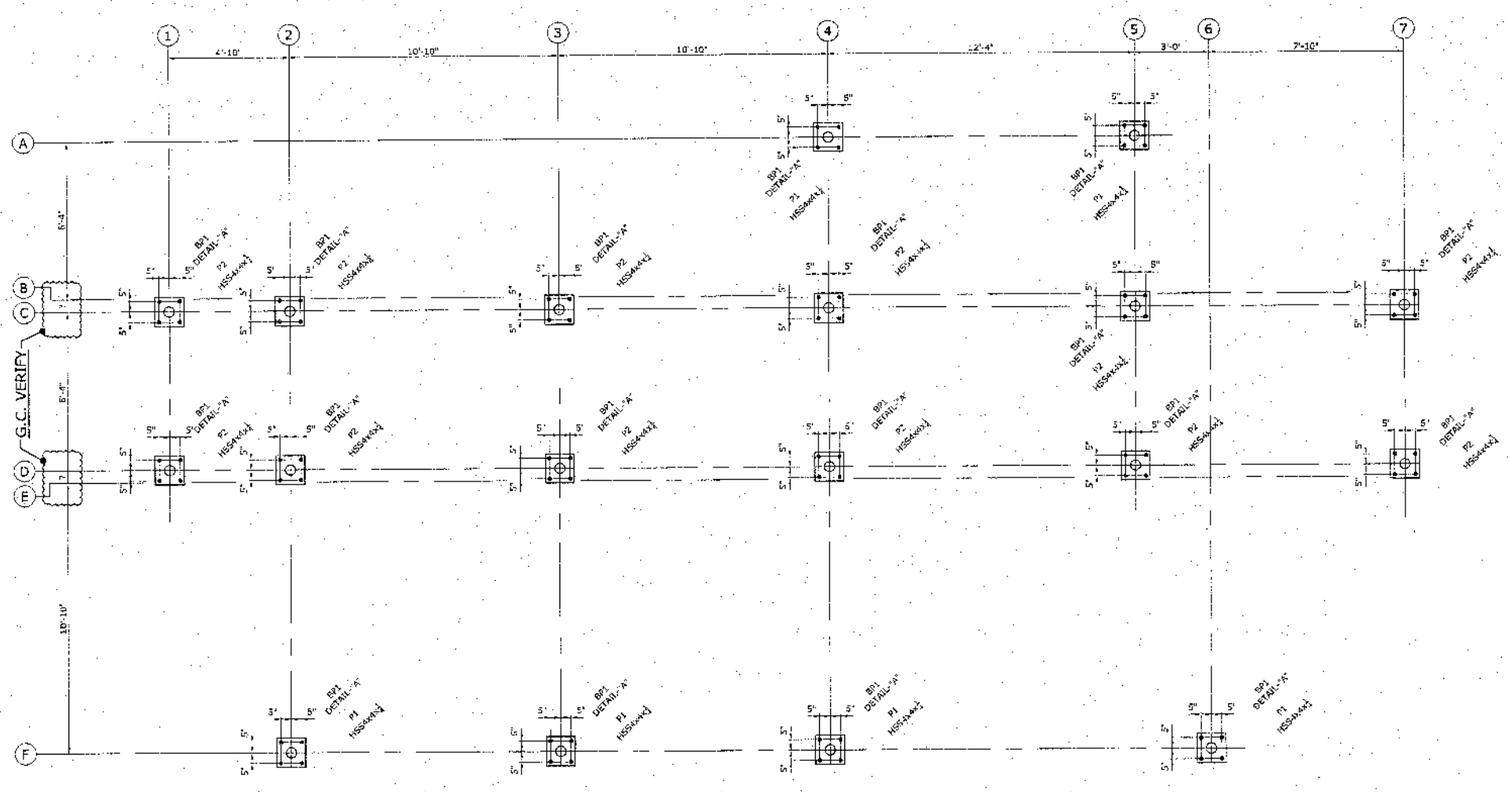

ANCHOR BOLT SETTING PLAN

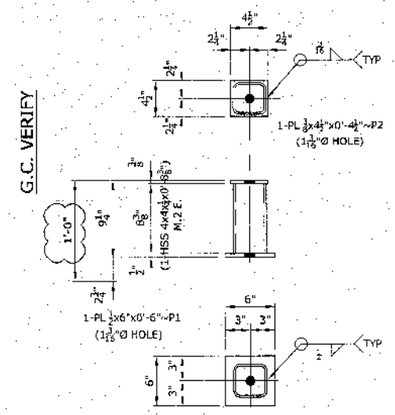

6-POSTS~P1

6-1"Ø A325 BOLTS x 11" (FIELD)
6-1"Ø A325 NUTS (FIELD)
6-1"Ø HD. WASHERS (FIELD)

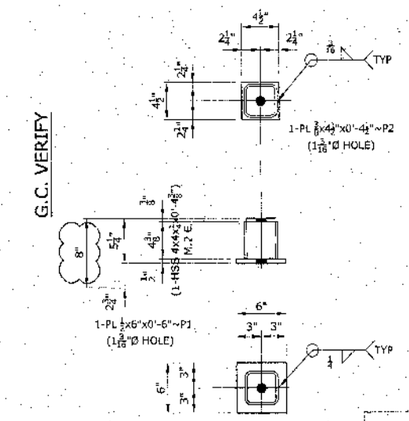

12-POSTS~P2

12-1"Ø A325 BOLTS x 6" (FIELD)
12-1"Ø A325 NUTS (FIELD)
12-1"Ø HD. WASHERS (FIELD)

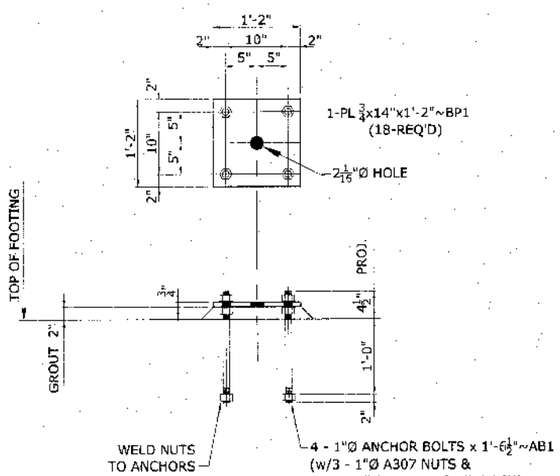

DETAIL-"A"

ISSUED FOR APPROVAL ONLY
MOORE & MORFORD, INC.

Cavcon Construction, Inc.
DATE 9-24 By Bob Nelson

B P	A B		P	MOORE & MORFORD INC. GREENSBURG, PA. 15601
1	1		1	
			2	JOB POWDER MILL MODULAR BUILDING
				LOCATION RECTOR, PA.
				PURCHASER CAVCON CONSTRUCTION
				ARCHITECT
				DESCRIPTION ANCHOR BOLT PLAN & DETAILS
				DR. PGM 9-21-07 HOLES AS NOTED
				CH. JPM 9-24-07 HSS = A500-B MATERIAL PL's & L's = A36
				WELD: LHE70T-4
				BOLTS AS NOTED
				PAINT ONE - SHOP COAT - SHERWIN WILLIAMS B50NV2002 HOT DIP GALV.
				S.O. NO. S88739 SHEET NO. 1 OF