SOLAR DECATHLON ’07

UNIVERSITY OF ILLINOIS AT URBANA-CHAMPAIGN

SPECIFICATIONS

(AUGUST 7, 2007 SUBMISSION)

COMMUNICATIONS COMPUTER SCIENCE GRAPHIC DESIGN
INDUSTRIAL DESIGN ARCHITECTURE ENGINEERING

solar decathlon ‘07
UNIVERSITY OF ILLINOIS AT URBANA-CHAMPAIGN

www.solardecathlon.uiuc.edu

00 00 00 PROCUREMENT AND CONTRACTING REQUIREMENTS

00 01 01 Project Title Page

Title: UIUC 2007 SOLAR DECATHLON

Date: June 2006 – October 2007

Construction Site: 5 East Armory St., Champaign, IL 61820

Student Team Leaders and Contacts:

Mechanical Engineering:	Ben Barnes	bpbarnes5290@gmail.com
Transportation:	Bob Kinsey	bkinsey2@uiuc.edu
Industrial Design:	Donna Murray Tiedge	dmtiedge@uiuc.edu
Project Manager:	Jason Wheeler	jason.w.wheeler@gmail.com
Modeling:	Luis Aaron Martinez	lmartin7@uiuc.edu
Architecture:	Nora Na Wang	nawang2@uiuc.edu
Communications:	Susan McKenna	mckenna1@uiuc.edu
Electrical Engineering:	Trishan Esram	esram@uiuc.edu

Faculty Advisors and Contacts:

Architecture:	Michael T. McCulley	mmccull@ad.uiuc.edu
Mechanical Engineering:	Ty A. Newell	tynewell@uiuc.edu
Electrical Engineering:	Patrick L. Chapman	plchapma@ad.uiuc.edu
Industrial Design:	Deana McDonagh	mcdonagh@uiuc.edu
Communications:	David Schejbal	schejbal@ad.uiuc.edu

UIUC Team Webpage: http://www.solardecathlon.uiuc.edu/

UIUC Team Contact: solardecathlon@uiuc.edu

Solar Decathlon Webpage: http://www.solardecathlon.org/

00 01 10 Table of Contents

Page

00 01 15 List of Drawing Sheets

The construction document set contains the following drawings.

Architectural			**ADA compliance**	
A0.01	Table of contents		ADA.01	ADA tour route
A1.01	Site plan		ADA.02	Door approaches
A1.02	N & S site elevation		**Fire protection**	
A1.03	E & W site elevation		F1.01	Fire protection plan
A2.01	Floor plan		**Structural**	
A2.02	Building footprint area		S1.01	Foundation plan
A2.03	Conditioned area		S1.02	Floor framing plan
A3.01	Roof plan		S1.03	Deck framing plan
A3.02	Solar panel layout		S1.04	Roof framing plan
A4.01	Dimensioned floorplan		S1.05	Structural detail
A5.01	Reflected ceiling plan		S1.06	Structural detail
A5.02	Ceiling panel detail		S2.01	PV array overview
A5.03	Ceiling panel section		S2.02	10 PV panel structure
A6.01	South elevation		S2.03	8&4 PV panel structure
A6.02	North elevation		S2.04	Solar panel linkages
A6.03	East elevation		**Plumbing**	
A6.04	West elevation		P1.01	Plumbing plan
A6.05	East-west section		P1.02	Plumbing supply isometric
A6.06	North-south section		P1.03	Plumbing waste
A7.01	Typical wall section		**Mechanical**	
A7.02	Wall types		M1.01	Heat pump/AC
A7.03	Typical door detail		M1.02	Ventilation plan
A7.04	Typical window detail		M1.03	Reflected ceiling plan
A7.05	Scupper and connection detail		**Electrical**	
A7.06	Electrical door		E1.01	Electrical schematic
A7.07	Medicine cabinet		E1.02	Exterior wiring
A7.08	Sliding door detail		E1.03	Power supply
A7.09	Solar panel detail		E1.04	AC Panel Schedule
A7.10	Trellis detail		E1.05	Branch circuits
A8.01	Window schedules		E1.06	Electrical plan
A8.02	Door schedules		**Transportation**	
A9.01	Stair and rail details		T1.01	WDC rail system

A9.02	Ramp details		T1.02	Rail layout
A10.01	N & E living elevations		T2.01	Shipping truck 1
A10.02	W & S living elevations		T2.02	Shipping truck 2
A10.03	N & E kitchen elevations		T2.03	Truck layout
A10.04	S & W kitchen elevations		T2.04	Site operation
A10.05	Bedroom elevations		T2.05	Assembly process
A10.06	Bathroom elevations		T2.06	Disassembly process
A12.01	Battery box			
A12.02	Battery box section			

05 00 00 METALS

05 50 00 METAL FABRICATIONS

05 52 00 METAL RAILINGS

Luna from GKD metal fabric is selected as the railing system. GKD typically supplies the fabric and all the hardware, as well as engineering calculations and shop drawings. The substructure for attachment is not included. Framed panels require the addition of a substructure for attachment and are most appropriate for rigid metal fabrics. Framed panels are the most appropriate attachment method for small panels used in applications such as handrail in-fills. The product detail and framing method are shown on the pages 9 and 10, respectively.

GKD METAL FABRICS

Luna

GKD-USA Inc
825 Chesapeake Drive
Cambridge MD 21613

T 800 453 8616
T 410 221 0542
F 410 221 0544
gkdmetalfabrics.com

Rigid

Material	AISI Type 316 stainless steel
Open area	42%
Weight	0.57 lbs/sqft
Thickness	0.05"
Flat strips	0.069" wide, 0.025" thick
Opening	0.125" sq
Maximum width	20'
Maximum length	80'

Attachment methods
Frame
Frame with bent fabric
Flat & angle, threaded rod
Flats, clevis & binding rod

Product specifications are subject to change. All measurements are approximate and should be confirmed with a sample.

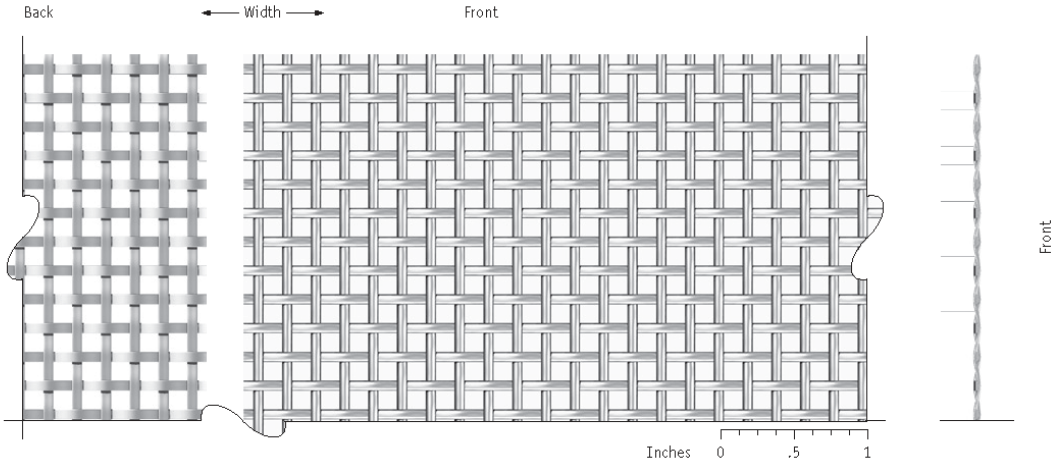

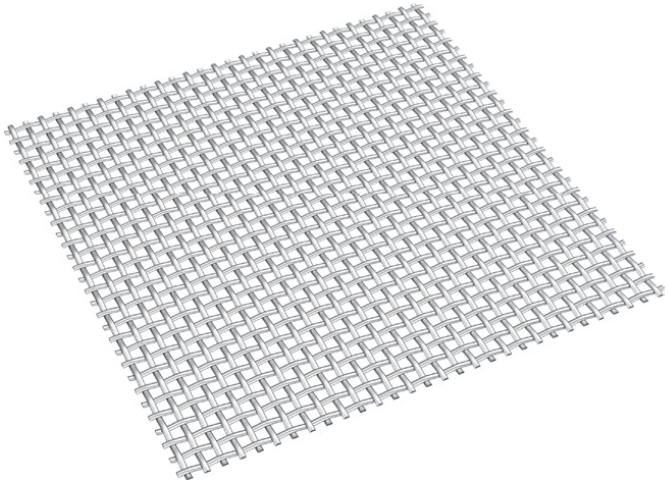

PDF/0105

GKDMETALFABRICS

GKD-USA Inc
825 Chesapeake Drive
Cambridge MD 21613

T 800 453 8616
T 410 221 0542
F 410 221 0544
gkdmetalfabrics.com

Frame

This rigid frame requires attachment to a substructure. The metal fabric is clamped tight by bolts into a frame made of flat and angled bars. Various bar profiles can be considered. Pre-crimped fabrics can also be welded to frames. Fabric is not tensioned in this construction and to assure flatness, panel size must be considered based on fabric selection.

Shown with Square

These drawings are for reference only. They are not to scale. All hardware and attachments must be sized based upon your project requirements. Please consult GKD Engineering for further detailing assistance.

Product compatibility

Baltic	Lago PC
Capella	Lamelle
Delphin	Luna
Delta 16	Mandarin
Delta 30	Ocean
Ellipse 2	Omega 1500
Ellipse 14	Omega 1510
Ellipse 52	Omega 1520
Futura 240	Omega 1530
Futura 240 PC	Omega 1550
Futura 3110	Omega 216
Futura 3110 PC	Sambesi
Herringbone 3	Sambesi PC
Herringbone 5	Square
Kiwi	Tigris
Lago	Tigris PC

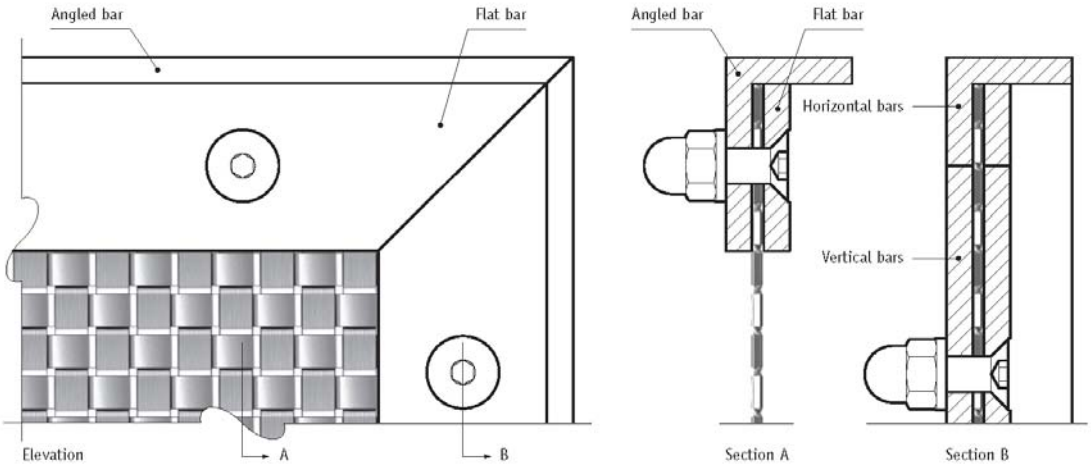

PDF/0105

05 60 00 METAL STRUCTURES

05 62 00 SPECIAL METAL STRUCTURAL SUPPORT SYSTEM

The structural support system allows the assembly of the house on any site with no external power such as a diesel crane. This is achieved with a structural support system that functions not only as the foundation for the house, but also as the means by which the house is manufactured and transported. The foundation consists of 5” x 5” steel rails that are bolted to the sub-floor of each house module. Each module rests on a perpendicular grid of steel rails that are supported by fully adjustable jack stands. In between the floor mounted rails and the foundation rails are steel roller assemblies that make it possible to roll the individual home modules into place. Each jack stand has full adjustability for leveling the complete home, which accommodates the sloping landscape. The rails, rollers, and jacks were obtained from The Holland Group, Inc. Their specifications are given on pages 12–15.

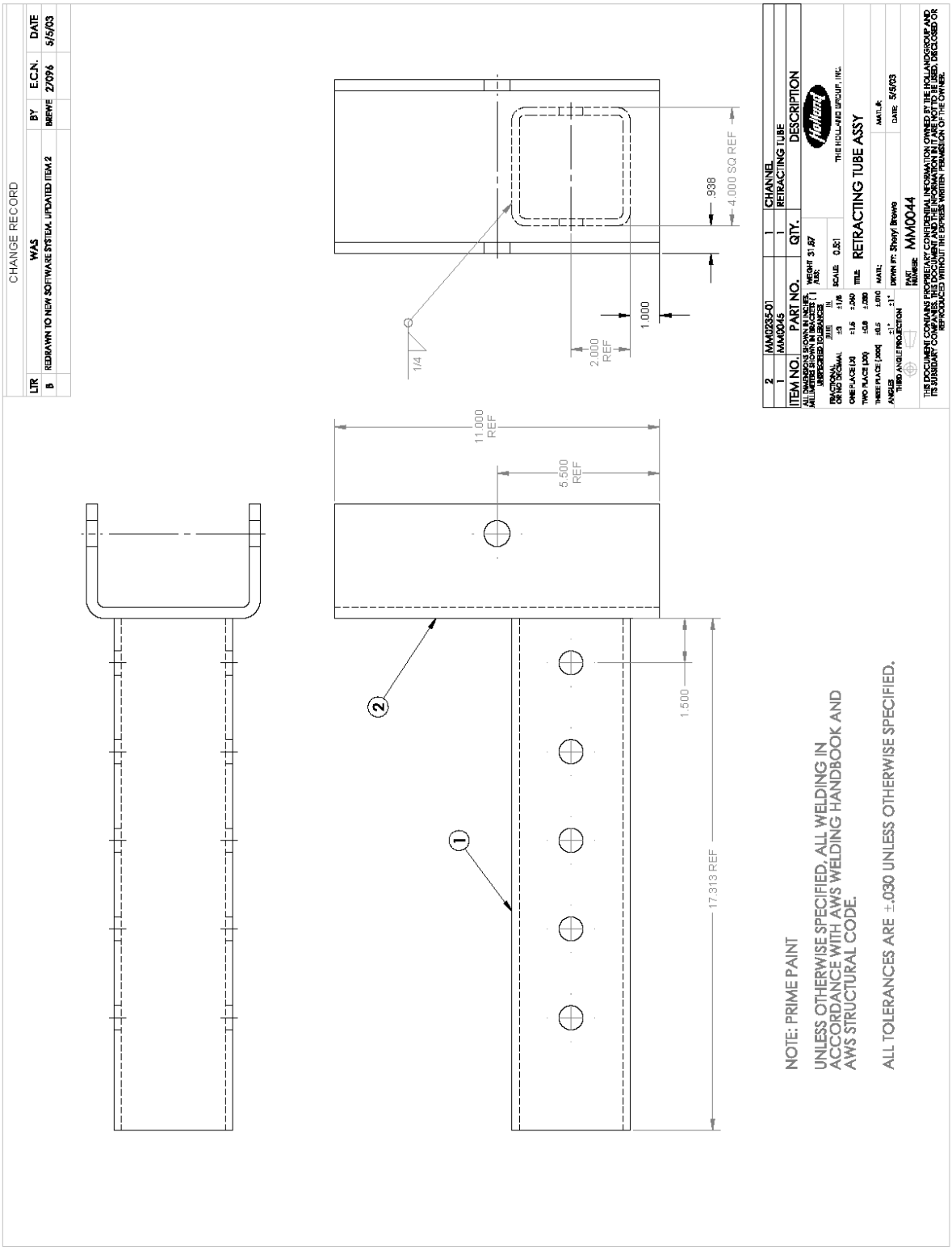
CHANGE RECORD
LTR
WAS
BY
E.C.N.
DATE
B
REDRAWN TO NEW SOFTWARE SYSTEM. UPDATED ITEM 2
BREWE
27096
5/5/03
1/4
2.000 REF
1.000
.938
4.000 SQ REF
11.000 REF
5.500 REF
1.500
17.313 REF
2
1
2 MM0235-01 1 CHANNEL
1 MM0045 1 RETRACTING TUBE
ITEM NO. PART NO. QTY. DESCRIPTION
ALL DIMENSIONS SHOWN IN INCHES UNLESS OTHERWISE SPECIFIED
WEIGHT 31.97 LBS.
FRACTIONAL OR NO DECIMAL ±.5 ±1/16
SCALE 0.5:1
ONE PLACE [.X] ±.5 ±.030 TITLE RETRACTING TUBE ASSY
TWO PLACE [.XX] ±.05 ±.010 MATL
THREE PLACE [.XXX] ±.01 ±.010
ANGLES ±1° ±1°
THIRD ANGLE PROJECTION
DRAWN BY: Sheryl Brewe
DATE 5/5/03
PART NUMBER MM0044
THE HOLLAND GROUP, INC.
THE DOCUMENT CONTAINS PROPRIETARY CONFIDENTIAL INFORMATION OWNED BY THE HOLLAND GROUP AND ITS SUBSIDIARY COMPANIES. INFORMATION MAY NOT BE USED, DISCLOSED OR REPRODUCED WITHOUT THE EXPRESS WRITTEN PERMISSION OF THE OWNER.
NOTE: PRIME PAINT
UNLESS OTHERWISE SPECIFIED, ALL WELDING IN ACCORDANCE WITH AWS WELDING HANDBOOK AND AWS STRUCTURAL CODE.
ALL TOLERANCES ARE ±.030 UNLESS OTHERWISE SPECIFIED.

DWG NO.	A	A [MM]	DESCRIPTION	WT/#'S
MM0061-01	36.000	914.40	ROLLER TRACK- 3' - 0"	35.587
MM0061-02	72.000	1828.80	ROLLER TRACK- 6' - 0"	71.284
MM0061-03	144.000	3657.60	ROLLER TRACK- 12' - 0"	142.569
MM0061-04	168.000	4267.20	ROLLER TRACK- 14' - 0"	166.367
MM0061-05	132.000	3352.80	ROLLER TRACK- 11' - 0"	130.670
MM0061-06	156.000	3962.40	ROLLER TRACK- 13' - 0"	154.468
MM0061-07	84.000	2133.60	ROLLER TRACK- 7' - 0"	83.074
MM0061-08	96.000	2438.40	ROLLER TRACK- 8' - 0"	94.973
MM0061-09	140.000	3556.00	ROLLER TRACK- 11' - 8 "	138.603
MM0061-11	120.000	3048.00	ROLLER TRACK- 10' - 0"	118.771
MM0061-13	126.000	3200.40	ROLLER TRACK- 10' - 6 "	124.720
MM0061-19	150.000	3810.00	ROLLER TRACK- 12' - 6 "	148.518
MM0061-20	192.000	4876.80	ROLLER TRACK- 16' - 0"	190.165
MM0061-22	48.000	1219.20	ROLLER TRACK- 4' - 0"	47.486
MM0061-27	149.000	3784.60	ROLLER TRACK- 12' - 5"	147.527
MM0061-31	180.000	4572.00	ROLLER TRACK- 15' - 0"	178.266
MM0061-33	108.000	2743.20	ROLLER TRACK- 9' - 0"	106.872
MM0061-34	162.000	4114.80	ROLLER TRACK- 13' - 6"	160.417
MM0061-36	130.000	3302.00	ROLLER TRACK- 10' - 10"	128.687
MM0061-37	152.000	3860.80	ROLLER TRACK- 12' - 8"	150.502
MM0061-38	171.000	4343.40	ROLLER TRACK- 14' - 3"	169.342
MM0061-39	60.000	1524.00	ROLLER TRACK- 5' - 0"	59.385
MM0061-40	174.000	4419.60	ROLLER TRACK- 14' - 6"	172.316
MM0061-41	172.000	4368.80	ROLLER TRACK- 14' - 4"	170.333

CHANGE RECORD

LTR.	WAS	BY	E.C.N.	APRV	DATE
PS	REDRAWN TO NEW SOFTWARE SYSTEM, DELETED PART NUMBERS NOT IN SAP	BREWE	27004		03/11/03
PT	MATL NUMBER XC44-H013-004 WAS XC44-A500-70-006. 70,000 MIN PSI YLD WAS 65,000. ADD DEBURR ENDS TO NOTE 1. NOTE 2 MAXIMUM WAS MINIMUM. REMOVED NOTE : "ALL TOLERANCES ARE ±.030". ADD TOLERANCE TO INDIVIDUAL DIMS. 'A' DIM ±.062 WAS .030. ADD WEIGHTS AND DUAL DIMS.	BREWE	28957		8/30/04

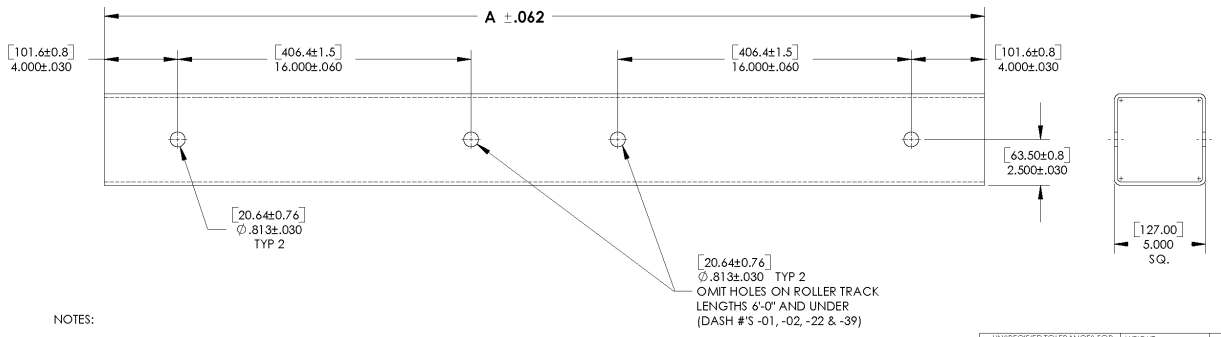

NOTES:

1. REMOVE ALL SHARP EDGES & BURRS. ENDS MUST HAVE BOTH INSIDE AND OUTSIDE EDGES DEBURRED.
2. INSIDE FLASH MUST BE REMOVED OR MAXIMUM OF .032"

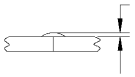

3. PRIME PAINT

UNSPECIFIED TOLERANCES FOR DIMENSIONS
ALL DIMS SHOWN ARE IN INCHES
MILLIMETERS SHOWN IN BRACKETS [ ]

INCH	FRACTIONAL OR NO DECIMAL	[MM]
±1/8		[±1.52]
±.060	ONE PLACE (X)	[±0.76]
±.030	TWO PLACE (XX)	[±0.25]
±.010	THREE PLACE (XXX)	[N/A]
±1°	ANGLES	[±1°]

THIRD ANGLE PROJECTION

WEIGHT: SEE CHART
SCALE: 1:4
THE HOLLAND GROUP, INC.
TITLE: ROLLER TRACK
MATL: TUBE SQ 5 X 5 X 3/16 THK 70,000 PSI MIN YLD
MATL#: XC44-H013-004
PART NUMBER: MM0061-TAB
REV. PT

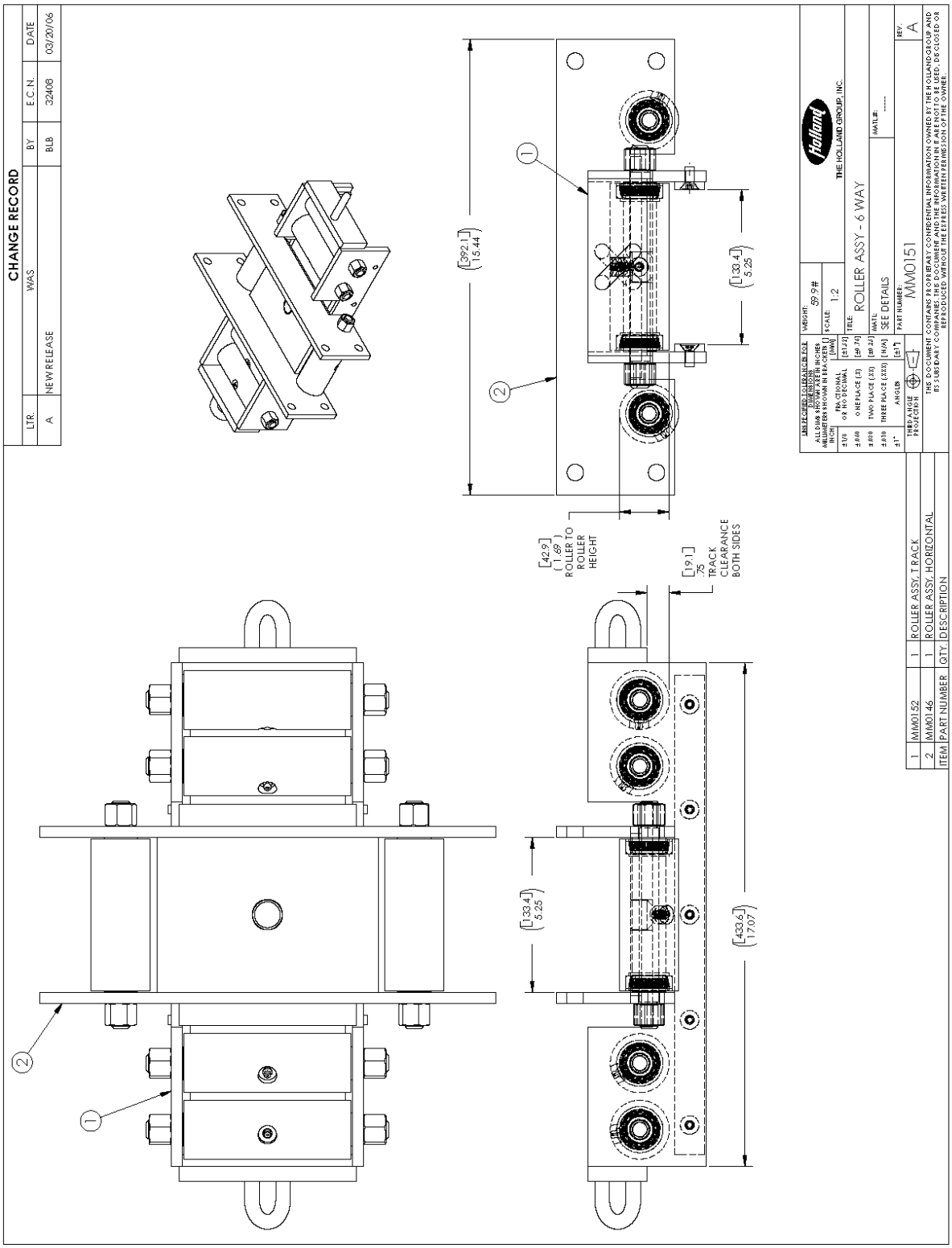
CHANGE RECORD
LTR. WAS BY E.C.N. DATE
A NEW RELEASE BLB 32408 03/20/06
[392.1] 15.44
[133.4] 5.25
[42.9] (1.69) ROLLER TO ROLLER HEIGHT
[19.1] .75 TRACK CLEARANCE BOTH SIDES
[133.4] 5.25
[433.6] 17.07
THE HOLLAND GROUP, INC.
WEIGHT: 59.9#
SCALE: 1:2
TITLE: ROLLER ASSY - 6 WAY
MATL: SEE DETAILS
MATL#: ----
PART NUMBER: MM0151
REV: A
1 MM0152 1 ROLLER ASSY, TRACK
2 MM0146 1 ROLLER ASSY, HORIZONTAL
ITEM PART NUMBER QTY. DESCRIPTION
THIRD ANGLE PROJECTION
THE DOCUMENT CONTAINS PROPRIETARY CONFIDENTIAL INFORMATION OWNED BY THE HOLLAND GROUP AND ITS SUBSIDIARY COMPANIES. THE DOCUMENT AND THE INFORMATION IN IT ARE NOT TO BE USED, DISCLOSED OR REPRODUCED WITHOUT THE EXPRESS WRITTEN PERMISSION OF THE OWNER.

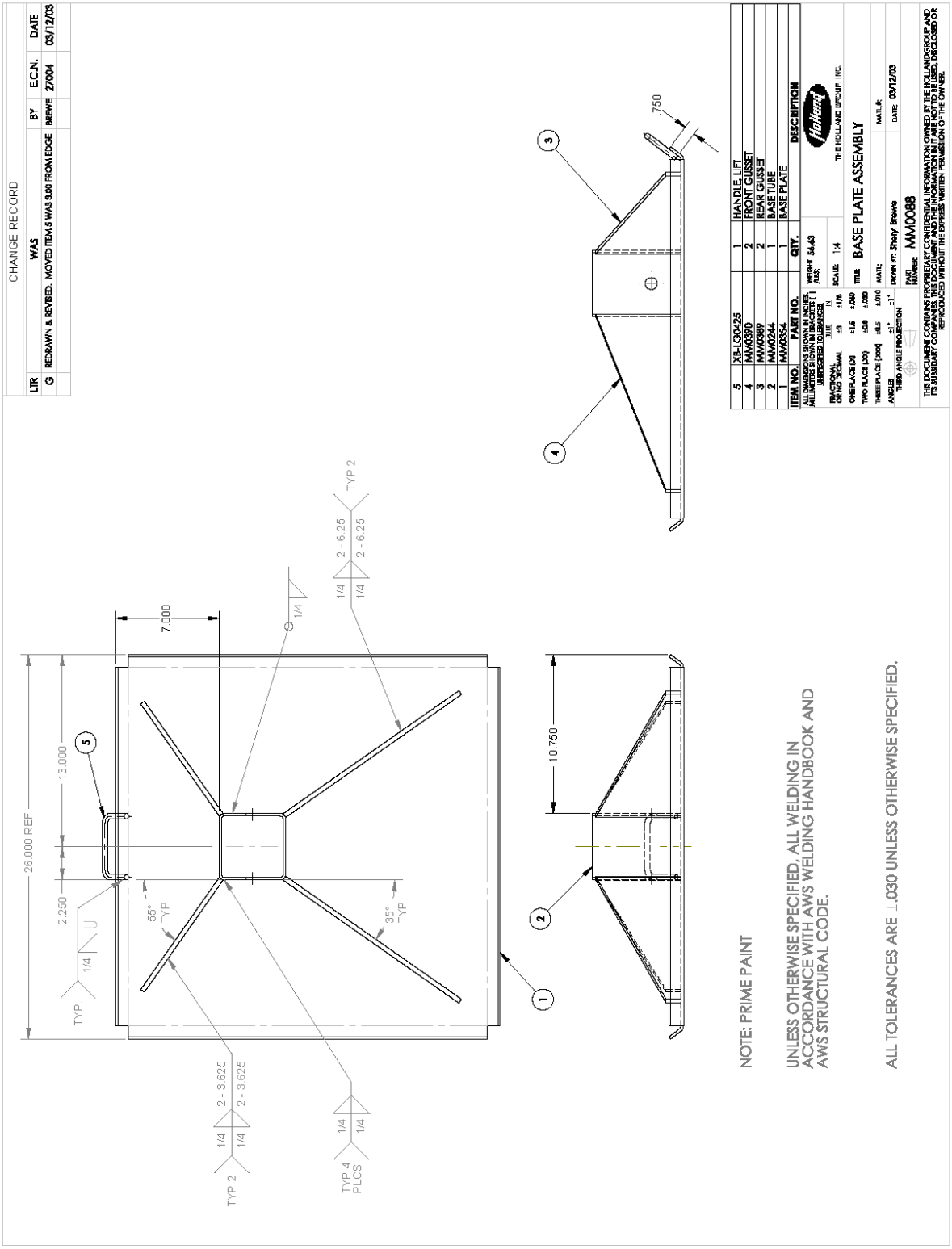
CHANGE RECORD
LTR
WAS
BY
E.C.N.
DATE
G
REDRAWN & REVISED. MOVED ITEM 5 WAS 3.00 FROM EDGE
BREWE
27004
03/12/03
26.000 REF
13.000
2.250
7.000
10.750
.750
55° TYP
35° TYP
TYP
TYP 2
TYP 4 PLCS
2 - 3.625
2 - 6.25
1/4
5 X5-LG0425 1 HANDLE LIFT
4 MAK0390 2 FRONT GUSSET
3 MAK0389 2 REAR GUSSET
2 MAK0244 1 BASE TUBE
1 MAK0354 1 BASE PLATE
ITEM NO. PART NO. QTY. DESCRIPTION
WEIGHT 56.63
SCALE 1:4
THE HOLLAND GROUP, INC.
TITLE BASE PLATE ASSEMBLY
DRAWN BY: Sheryl Brewe
DATE 03/12/03
PART NUMBER MM0088
NOTE: PRIME PAINT
UNLESS OTHERWISE SPECIFIED, ALL WELDING IN ACCORDANCE WITH AWS WELDING HANDBOOK AND AWS STRUCTURAL CODE.
ALL TOLERANCES ARE ±.030 UNLESS OTHERWISE SPECIFIED.

08 00 00 OPENINGS

08 10 00 DOORS AND FRAMES

08 14 00 WOOD DOORS

08 14 23 Aluminum-Clad Wood French Hinged Doors

PART 1 GENERAL

1.1 SECTION INCLUDES

A. Designer Series Aluminum-clad wood French hinged doors.

1.2 RELATED SECTIONS

A. Section 07 27 00 - Air Barriers: Water-resistant barrier.

B. Section 07 92 00 - Joint Sealants: Sealants and caulking.

C. Section 08 71 00 - Door Hardware.

1.3 REFERENCES

A. American Architectural Manufacturers Association (AAMA):
   1. AAMA 502 - Voluntary Specification for Field Testing of Windows and Sliding Doors.
   2. AAMA 2603 - Voluntary Specification, Performance Requirements and Test Procedures for Pigmented Organic Coatings on Aluminum Extrusions and Panels.
   3. AAMA 2605 - Voluntary Specification, Performance Requirements and Test Procedures for Superior Performing Organic Coatings on Aluminum Extrusions and Panels.

B. American Society for Testing and Materials (ASTM):
   1. ASTM B 117 - Operating Salt Spray (Fog) Apparatus.
   2. ASTM C 1036 - Flat Glass.
   3. ASTM C 1048 - Heat-Treated Flat Glass – Kind HS, Kind FT Coated and Uncoated Glass.
   4. ASTM D 1149 - Rubber Deterioration – Surface Ozone Cracking in a Chamber.
   5. ASTM D 2803 - Filiform Corrosion Resistance of Organic Coatings on Metal.
   6. ASTM D 3656 - Insect Screening and Louver Cloth Woven from Vinyl-Coated Glass Yarns.
   7. ASTM D 4060 - Abrasion Resistance of Organic Coatings by the Taber Abraser.
   8. ASTM E 283 - Rate of Air Leakage Through Exterior Windows, Curtain Walls and Doors Under Specified Pressure Difference Across the Specimen.
   9. ASTM E 330 - Structural Performance of Exterior Windows, Curtain Walls and Doors by Uniform Static Air Pressure Difference.
   10. ASTM E 547 - Water Penetration of Exterior Windows, Curtain Walls and Doors by Cyclic Static Air Pressure Differential.
   11. ASTM G 85 - Modified Salt Spray (Fog) Testing.

C. Window and Door Manufacturers Association (WDMA):
   1. ANSI/AAMA/NWWDA 101/I.S.2 - Voluntary Specifications for Aluminum, Vinyl (PVC) and Wood Windows and Glass Doors.
   2. ANSI/AAMA/NWWDA 101/I.S.2/NAFS-02 - Voluntary Performance Specification for Windows, Skylights and Glass Doors.

3. WDMA I.S.4 - Industry Standard for Water-Repellent Preservative Non-Pressure Treatment for Millwork.

1.4 PERFORMANCE REQUIREMENTS

A. Doors shall be Hallmark certified to a rating of HGD – R 24 specifications in accordance with ANSI/AAMA/NWWDA I.S.2.

B. Door Unit Air Leakage, ASTM E 283, 1.57 psf (25 mph): 0.15 cfm per square foot of frame or less.

C. Door Unit Water Penetration: No water penetration through door unit when tested in accordance with ASTM E 547, under static pressure of 0 psf (0 mph) after 4 cycles of 5 minutes each, with water being applied at a rate of 5 gallons per hour per square foot.

1.5 SUBMITTALS

A. Comply with Division 1 requirements.

B. Product Data: Submit manufacturer's product data, including installation instructions.

C. Warranty: Submit manufacturer’s standard warranty.

1.6 QUALITY ASSURANCE

A. Mockup:
   1. Provide sample installation for field testing door performance requirements and to determine acceptability of door installation methods.

   2. Approved mockup shall represent minimum quality required for the Work.

   3. Approved mockup shall remain in place within the Work.

1.7 DELIVERY, STORAGE, AND HANDLING

A. Delivery: Deliver materials to site undamaged in manufacturer's or sales branch's original, unopened containers and packaging, with labels clearly identifying manufacturer and product name. Include installation instructions.

B. Storage: Store materials in an upright position, off ground, under cover, and protected from weather, direct sunlight, and construction activities.

C. Handling: Protect materials and finish during handling and installation to prevent damage.

PART 2 PRODUCTS

2.1 MANUFACTURER

A. Pella Corporation, 102 Main Street, Pella, Iowa 50219. Toll Free (800) 54-PELLA. Phone (641) 621-1000. Website www.pella.com.

2.2 ALUMINUM-CLAD WOOD FRENCH HINGED DOORS

A. Aluminum-Clad Wood Out-swing French Doors: Designer Series factory-assembled aluminum-clad wood French doors with outward swing door panels installed in frame.

B. Frame:
1. Select woods, water-repellent, preservative-treated in accordance with WDMA I.S.4.
2. Interior Exposed Surfaces: Clear pine, veneered and edge-banded with no visible fastener holes.
3. Exterior Surfaces: Clad with aluminum at head and jambs.
4. Sill: 1/2-inch low-profile extruded aluminum with bronze anodized finish.
5. Overall Frame Depth: 5-7/8 inches (149 mm).

C. Door Panel:
1. Select softwood, water-repellent, preservative-treated in accordance with WDMA I.S.4.
2. Panels: Three-ply construction. Randomly finger-jointed blocks laminated with water-resistant glue.
3. Interior Exposed Surfaces: Clear pine with no visible fastener holes.
4. Exterior Surfaces: Clad with aluminum.
5. Corners: Urethane sealed and secured with metal fasteners.
6. Panel Thickness: 2-1/16 inches (52 mm).

D. Weather Strip: Panel-mounted, dual-durometer extruded polymer one-piece design with welded corners.

2.3 GLAZING

A. Glazing:
1. Float Glass: ASTM C 1036, Quality 1.
   a. Tempered Glass: ASTM C 1048.

2. Type:
   a. Triple-Pane Glazing System: 5/8-inch, fully tempered, dual-seal insulating glass, polyurethane reactive hot melt (PUR) glazed argon-filled multi-layer, Low-E coated. Interior-hinged glass panel Low-E.

2.4 OPTIONS

A. Cellular Fabric Shades:
1. Spun-bond polyethylene terephthalate (PET) cellular fabric, 0.687 inch wide, hidden polyester cord.
2. Installed in Designer glazing systems between panels of glass.
3. [Raise and Lower] [Top-Down] type, operated with cordless operator.
4. Controlled by built-in operating mechanism.
5. Type: Snap-in/snap-out, attached to top of hinged-glass panel.

6. Color: Almond.

2.5 HARDWARE

A. Handles:
1. Solid brass on interior and exterior.
2. Interior thumb-turn.
3. Schlage configured “C-K” keyway pinlock cylinder on exterior.
4. Finish: Endura Hardware Collection satin nickel.

B. Locking System:
1. Mortised and keyed multi-point locking system.
2. 1-inch center dead bolt and shoot-bolts at head and sill shall engage simultaneously.

C. Hinges:
1. Corrosion-resistant leaves with wear-resistant hinge bushings and stainless steel pin and decorative cap.
2. Doors with Frame Heights 7’ 0” and Under: 3 hinges.
3. Doors with Frame Heights Greater than 7’ 0”: 4 hinges.
4. Finish:
   a. Out-Swing Doors: Match exterior door cladding.

2.6 TOLERANCES

A. Doors shall accommodate the following opening tolerances:
1. Vertical Dimensions Between High and Low Points: Plus 1/8 inch, minus 0 inch.
2. Width Dimensions: Plus 1/8 inch, minus 0 inch.
3. Building Columns or Masonry Openings: Plus or minus 1/8 inch from plumb.

2.7 FINISH

A. Exterior Finish System: Pella EnduraClad.
1. Exterior aluminum surfaces shall be finished with the following multi-stage system:
   a. Clean and etch aluminum surface of oxides.
   b. Pre-treat with chrome phosphate conversion coating.
   c. Pre-treat with chromic acid sealer/rinse.
   d. Top coat with baked-on polyester enamel.
2. Color: Pella Brown.
3. Performance Requirements: Exterior aluminum finishes shall meet or exceed the following performance requirements of AAMA 2605:
   a. Dry Film Hardness: Eagle Turquoise Pencil, F minimum.
   b. Film Adhesion: 1/16-inch crosshatch, dry, wet, boiling water.
   c. Impact Resistance: 1/10-inch distortion, no film removal.
   d. Abrasion Resistance: Falling sand coefficient value of 20 minimum.
   e. Chemical Resistance: 10 percent Muriatic acid, 15 minutes. Mortar pat test, 24 hours.
   f. Detergent Resistance: 3 percent at 100 degrees F, 72 hours.
   g. Corrosion Resistance: Humidity, 3,000 hours. Salt spray exceeds 3,000 hours.

B. Exterior Finish System Performance Requirements: Pella EnduraClad.
1. Exterior aluminum finishes shall meet or exceed following performance requirements:

a. Ozone Deterioration, ASTM D 1149, Modified: 5 ppm ozone, 160 degrees F, 60 percent relative humidity, 100 hours exposure, little or no loss of cure.
b. Filiform Corrosion Resistance of Organic Coatings on Metal, ASTM D 2803: No corrosion.
c. Taber Abrasion Resistance, ASTM D 4060: 500 g weight, CS-10 wheel, 500 cycles, less than 25 g weight loss.
d. Cyclic Acidified Salt Fog Test, ASTM G 85, Appendix A-2.

C. Interior Finish: Unfinished, ready for site finishing.

2.8 INSTALLATION ACCESSORIES

A. Flashing/Sealant Tape: Pella SmartFlash or Equivalent.
1. Aluminum-foil-backed butyl window and door flashing tape.
2. Maximum Total Thickness: 0.013 inch.
3. UV resistant.
4. Verify sealant compatibility with sealant manufacturer.

B. Insulating-Foam Sealant: Dow Great Stuff Window & Door.
1. Low-pressure, polyurethane window and door insulating-foam sealant.

PART 3 EXECUTION

3.1 EXAMINATION

A. Examine areas to receive doors. Notify Architect of conditions that would adversely affect installation or subsequent use. Do not proceed with installation until unsatisfactory conditions are corrected.

3.2 INSTALLATION

A. Install doors in accordance with manufacturer's instructions and approved shop drawings.

B. Install doors to be weather-tight and freely operating.

C. Maintain alignment with adjacent work.

D. Secure assembly to framed openings, plumb and square, without distortion.

E. Integrate door system installation with exterior water-resistant barrier using flashing/sealant tape. Apply and integrate flashing/sealant tape with water-resistant barrier using watershed principles in accordance with door manufacturer's instructions.

F. Place interior seal around door perimeter to maintain continuity of building thermal and air barrier using insulating-foam sealant.

G. Seal door to exterior wall cladding with sealant and related backing materials at perimeter of assembly.

H. Leave doors closed and locked with shoot bolts extended.

3.3 FIELD QUALITY CONTROL

A. Field Testing: Field-test windows in accordance with AAMA 502, Test Method A. Manufacturer’s representative shall be present.

3.4 CLEANING

A. Clean door frames and glass in accordance with Division 1 requirements.

B. Do not use harsh cleaning materials or methods that would damage finish.

C. Remove labels and visible markings.

3.5 PROTECTION

A. Protect installed doors to ensure that, except for normal weathering, doors will be without damage or deterioration at time of substantial completion.

08 30 00 SPECIALTY DOORS AND FRAMES

08 32 00 SLIDING GLASS DOORS

08 32 19 Sliding Wood-Framed Glass Doors

The SLIDE from 3form® is a wall mounted sliding panel assembly. With the unique patent pending eccentric standoff roller, the system introduces fine-tune adjusting, minimalist looks and refined design to the traditional barn door concept. With the top of the panel securely fastened to the top track, the bottom edge can either be contained with a recessed bottom roller, recessed floor track, or additional wall mount track and rollers. With these options and supporting 1/2" (12 mm) panels up to 4' x 8', the system can be customized for a variety of openings. In this case, single pane adjacent wall opening from Kit B is selected. See pages 23 to 32 for full descriptions, illustrations, and diagrams for installation.

3. FLOOR PIN & RECESSED TRACK (OPTION B)

The optional recessed track and floor pin allows for a clean looking plate affixed to the face of the panel and a pin mounted to an additional plate on the back of the panel. The result is a discrete yet functional floor guide.

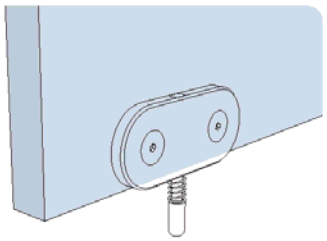

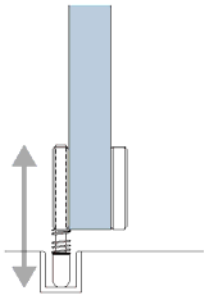

4. FRAMELESS CONSTRUCTION

The freely suspended frameless construction highlights the panel, not the hardware.

5. REFINED FINISHES

The satin anodized finish on the aluminum extrusion and the fine polished surface on the stainless steel complements the panel while eliminating the need for any type of track valance.

6. EASE OF INSTALLATION

The floor mounted roller guides and wall mounted track are perfect for simple remodelling without the need for demolition. When a floor channel is required, the recessed track is easily installed by a professional contractor.

SLIDE OVERVIEW

Choose from a selection of 2 kits, listed below (full descriptions, illustrations and diagrams can be found in the solutions section of this document), that which fits your requirements or design your own.

1. KIT A (SINGLE PANEL KIT WITH BOTTOM ROLLERS)

Kit A addresses a single panel installation over an opening up to 36" wide. The single panel kit includes (1) 82" length of top track with end pieces, (2) rolling standoffs, (2) bottom rollers, (1) floor receiver, and (1) double stop and requires (1) 44" x 94" panel. The placement of the track, in relation to the opening, determines the panel/wall overlap (see diagrams below). See pages 7-10 for more information.

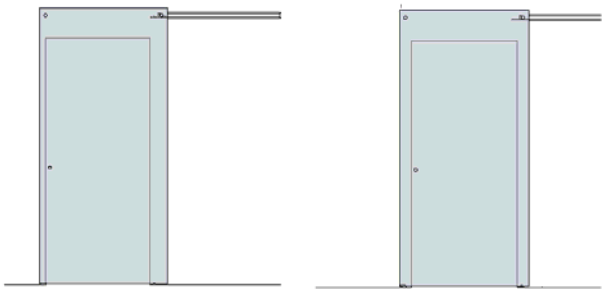

2. KIT B (SINGLE PANEL KIT WITH PIN & RECESSED TRACK)

Like Kit A above, Kit B includes a pin & recessed track instead of the bottom rollers. Suitable for single panel openings where a track is required and for openings up to 72" wide (requires 2 kits). See pages 11-14.

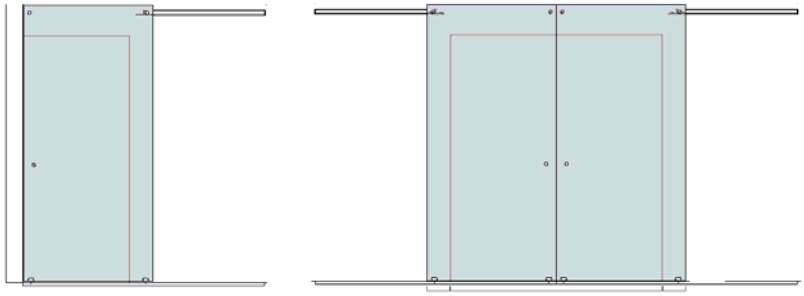

3. CUSTOM CONFIGURATION

With the components available in the rolling standoff system, a variety of other installations may be addressed. These allow you to either use a floor pin w/track or bottom roller with a single door installation, or an additional roller track when the bottom of the panel does not reach the floor level. One such custom configuration is illustrated with detailed information found on pages 12-13.

ADDITIONAL CONSIDERATIONS

TRAVEL

The dimensions given in this documentation, referring to the kits and regarding the placement of the double stop, panel size, and position of the rolling standoffs in the panel (2" from either side of a 44" wide panel), result in a 38" travel. For example, in the illustration below, when the panel is closed, there is a 4" overlap on a 36" wide opening. In the open position, there is a 2" overlap. The difference, or the travel, is 38".

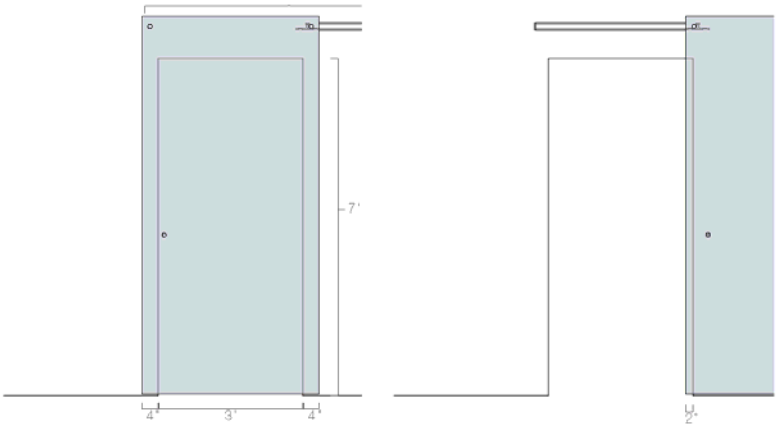

If you are installing a custom installation in terms of panel size or required travel, please note the following relationship when the double stop is used:

TRAVEL = DISTANCE BETWEEN ROLLERS - 2"

This limitation can be avoided if seperate single stops are used on either end of the track.

GAUGE

The rolling standoffs, floor receivers, and handles are designed to work only with 1/2" Varia or 3/4" Pep (3/4" Varia is suboptimal due to weight considerations) panels. These gauges are chosen to ensure the panel behaves appropriately (i.e. deflection is minimized) in a hanging panel condition.

3form SLIDE WALL MOUNT

TRACK

The track included with the kits is pre-fabricated with countersunk holes spaced every 16" and 2 holes in the center of the track for attachment of the double stop. If you will be installing single stops on either end or changing the location of the double stop, the track will need to be fabricated in the field to your specific requirements.

Additionally, each track is fabricated with holes on either end and ships with locating dowel pins. This allows 2 tracks to be joined together when longer spans of track are required.

BOTTOM ROLLER (FLUSH MOUNT VS. SURFACE MOUNT)

The bottom roller is designed primarily to be flush mounted in the floor. As such, the dimensions noted in this document assume a flush mount condition. Additionally, the floor receiver should also be recessed when installed.

If you wish to install the bottom roller in a surface mount condition, please be aware the puck may rotate over time resulting in the bottom rollers rotating away from the panel. We recommend using a small piece of strong double sided tape, such as 3M VHB, or other construction adhesive on the bottom of the roller to prevent the puck from rotating.

ADA COMPLIANCE

Per the Department of Justice ADA Regulations, the following guidelines should be considered in the design of your custom Slide solution when used to treat doorway openings. (See http://www.usdoj.gov/crt/ada/reg3a.html#Anchor-15677 for more information and diagrams).

> 4.13.5 Clear Width. Doorways shall have a minimum clear opening of 32 in (815 mm) with the door open 90 degrees, measured between the face of the door and the opposite stop.
>
> 4.13.9 Door Hardware. Handles, pulls, latches, locks, and other operating devices on accessible doors shall have a shape that is easy to grasp with one hand and does not require tight grasping, tight pinching, or twisting of the wrist to operate.
>
> Lever-operated mechanisms, push-type mechanisms, and U-shaped handles are acceptable designs. When sliding doors are fully open, operating hardware shall be exposed and usable from both sides. Hardware required for accessible door passage shall be mounted no higher than 48 in (1220 mm) above finished floor.

Kits A and B currently provide a pre-determined travel of 38 1/2" from open to close position. When installed over a single door opening, the door handle is not available from both sides in the open and closed position. If an ADA compliant solution is required, please consult your 3form sales rep to customize your Slide solution to the opening you are treating to ensure the requirements above are met.

3form SLIDE WALL MOUNT

KIT B

Kit B is identical to Kit A except for the inclusion of a recessed floor track, rather than the bottom roller and receivers. It is suitable for a double wide opening or when the edge of the panel must butt up against a wall.

For more information, please visit **3-form.com** or call **800.726.0126**

3form SLIDE WALL MOUNT

SINGLE PANEL KIT B COMPONENTS

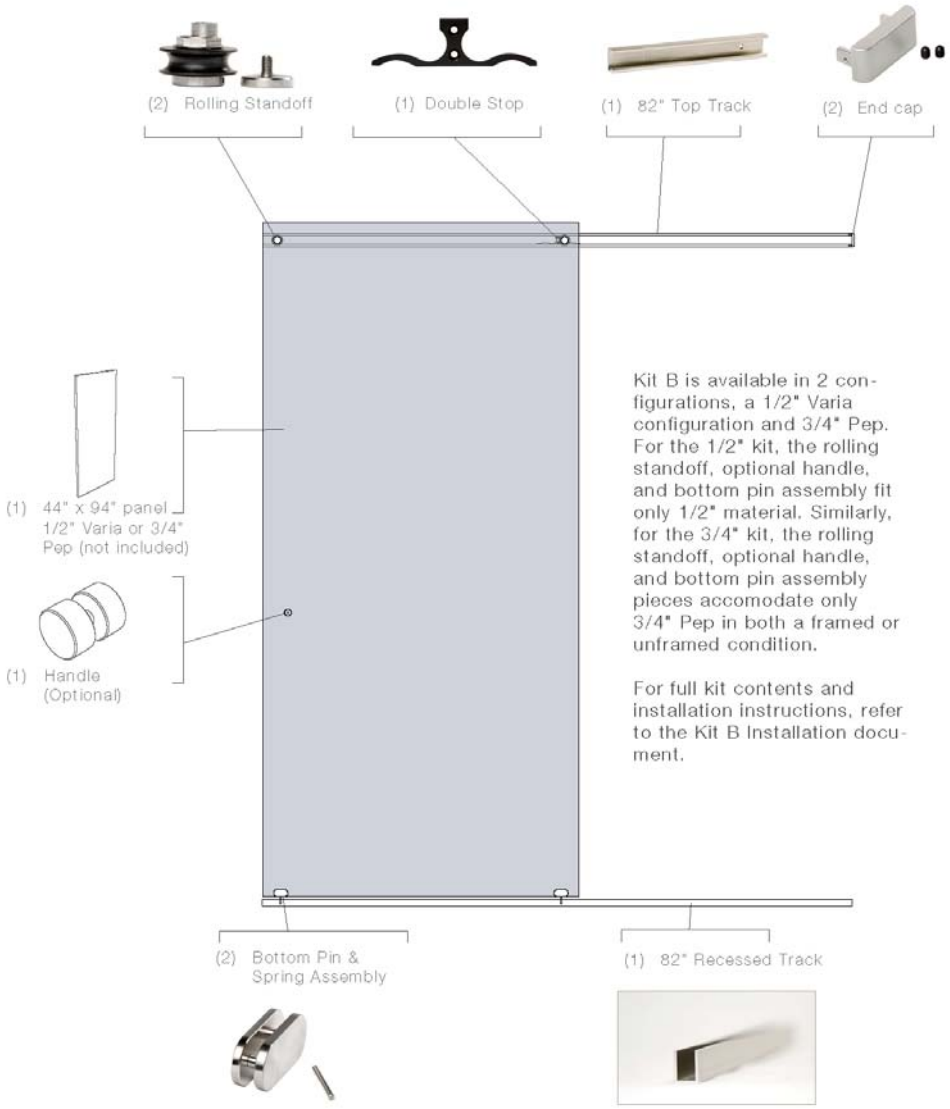

Kit B is available in 2 configurations, a 1/2" Varia configuration and 3/4" Pep. For the 1/2" kit, the rolling standoff, optional handle, and bottom pin assembly fit only 1/2" material. Similarly, for the 3/4" kit, the rolling standoff, optional handle, and bottom pin assembly pieces accomodate only 3/4" Pep in both a framed or unframed condition.

For full kit contents and installation instructions, refer to the Kit B Installation document.

For more information, please visit **3-form.com** or call **800.726.0126**

3form SLIDE WALL MOUNT

KIT B OPTION: ADJACENT WALL OPENING

In the diagram below, the door opening is adjacent to the wall, eliminating any option for overlapping the panel with the opening in the closed position.

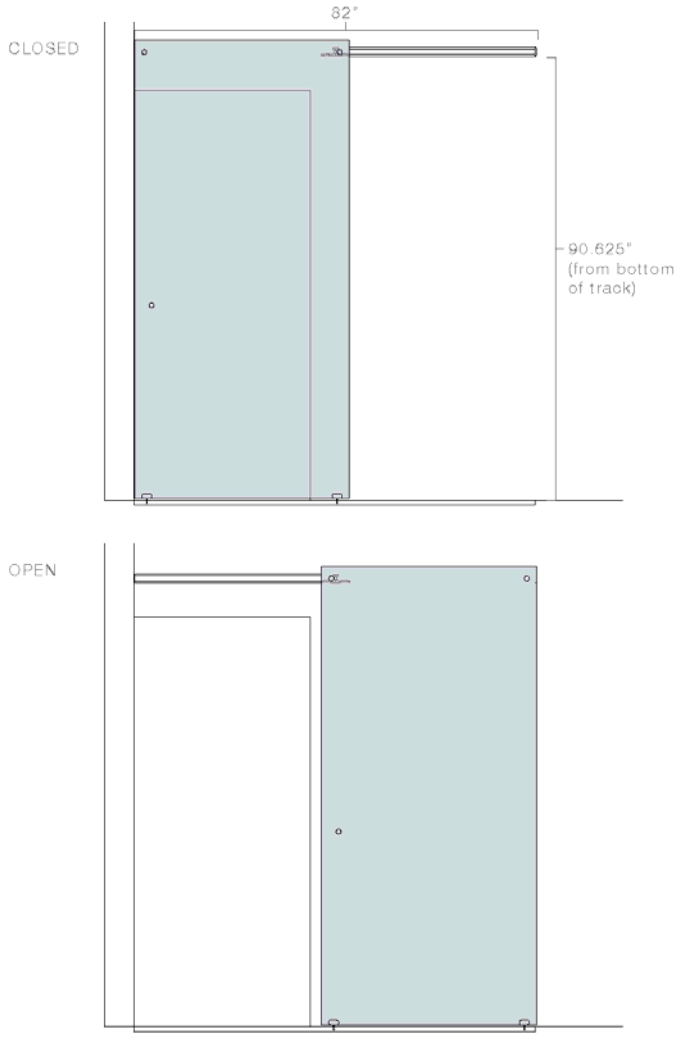

For more information, please visit **3-form.com** or call **800.726.0126**

3form SLIDE WALL MOUNT

COMPONENTS

Below are some specifications and dimensions for the primary components involved in the system. Additional instructions on installing the system can be found in the last section of this document.

ROLLER DOOR TOP TRACK

HEIGHT	1.855 IN (47 MM)
DEPTH	.810 IN (20.5 MM)
LENGTH	82 IN (208 CM)
INCLUDES	ADJOINING PINS FOR ADJACENT TRACKS
MATERIAL	ANODIZED ALUMINUM

END CAP

HEIGHT	1.855 IN (47 MM)
DEPTH	.810 IN (20.5 MM)
INCLUDES	M5 X 6 MM SET SCREWS
MATERIAL	ANODIZED ALUMINUM

STANDOFF ROLLER

MAX LOAD / TENSION	50 LBS
CAP DIAMETER	1 IN (25 MM)
PANEL GAUGE	1/2 IN VARIA OR 3/4 IN PEP

For more information, please visit **3-form.com** or call **800.726.0126**

17

3form SLIDE WALL MOUNT

DOUBLE STOP

MATERIAL	DELRIN

SINGLE STOP

MATERIAL	DELRIN

BOTTOM ROLLER

BASE HEIGHT	3/8 IN (10 MM)
TOTAL HEIGHT	.810 IN (20.5 MM)
BASE DIAMETER	1 IN (25 MM)
MATERIAL	STAINLESS STEEL

RECEIVER

DIAMETER	2 IN (50 MM)
HEIGHT	.813 IN (21 MM)
PANEL GAUGE	1/2 IN VARIA OR 3/4 IN PEP
MATERIAL	DELRIN

For more information, please visit **3-form.com** or call **800.726.0126**

FEBRUARY 10 2007 | SOLSPEC - 006 REV - 002

18

3form SLIDE WALL MOUNT

BOTTOM PIN & SPRING ASSEMBLY

PLATE	1 IN X 2 1/4 IN (25 MM X 57 MM)
PANEL GAUGE	1/2 IN VARIA OR 3/4 IN PEP

RECESSED TRACK

TRACK	3/8 IN WIDE X 1/2 IN DEEP (10 MM WIDE X 12 MM DEEP)
LENGTH	82 IN (208 CM)
MATERIAL	ANODIZED ALUMINUM

HANDLE

DIAMETER	1 IN (25 MM)
PANEL GAUGE	1/2 IN VARIA OR 3/4 IN PEP
MATERIAL	STAINLESS STEEL

For more information, please visit **3-form.com** or call **800.726.0126**

19

08 50 00 WINDOWS

08 54 00 FIBERGLASS WINDOWS

08 54 13 Fiberglass Fixed Frame Windows

PART 1 GENERAL

1.1 SECTION INCLUDES

A. Fiberglass fixed frame windows.

1.2 RELATED SECTIONS

A. Section 07 27 00 - Air Barriers: Water-resistant barrier.

B. Section 07 92 00 - Joint Sealants: Sealants and caulking.

1.3 REFERENCES

A. American Architectural Manufacturers Association (AAMA):
   1. AAMA 502 - Voluntary Specification for Field Testing of Windows and Sliding Doors.
   2. AAMA 613 - Voluntary Performance Requirements and Test Procedures for Organic Coatings on Plastic Profiles.

B. American Society for Testing and Materials (ASTM):
   1. ASTM C 1036 - Flat Glass.
   2. ASTM C 1048 - Heat-Treated Flat Glass--Kind HS, Kind FT Coated and Uncoated Glass.
   3. ASTM E 283 - Rate of Air Leakage Through Exterior Windows, Curtain Walls and Doors Under Specified Pressure Difference Across the Specimen.
   4. ASTM E 547 - Water Penetration of Exterior Windows, Curtain Walls and Doors by Cyclic Static Air Pressure Differential.

C. Window and Door Manufacturers Association (WDMA):
   1. ANSI/AAMA/NWWDA 101/I.S.2 - Voluntary Specifications for Aluminum, Vinyl (PVC) and Wood Windows and Glass Doors.

1.4 PERFORMANCE REQUIREMENTS

A. Windows shall meet Rating F-R 22 specifications in accordance with ANSI/AAMA/NWWDA 101/I.S.2.

B. Window Air Leakage, ASTM E 283: Window air leakage when tested at 1.57 psf (25 mph) shall be 0.25 cfm/ft^2 of frame or less.

C. Window Water Penetration, ASTM E 547: No water penetration through window when tested under static pressure of 4.5 psf (42 mph) after 4 cycles of 5 minutes each, with water being applied at a rate of 5 gallons per hour per square foot.

1.5 SUBMITTALS

A. Submit in accordance with Division 1 requirements.

B. Product Data: Submit manufacturer's product data, including installation instructions.

1.6 QUALITY ASSURANCE

A. Mockup:
   1. Provide sample installation for field testing window performance requirements and to determine acceptability of window installation methods.
   2. Approved mockup shall represent minimum quality required for the Work.
   3. Approved mockup shall remain in place within the Work.

1.7 DELIVERY, STORAGE, AND HANDLING

A. Delivery: Deliver materials to site undamaged in manufacturer's or sales branch's original, unopened containers and packaging, with labels clearly identifying manufacturer and product name. Include installation instructions.

B. Storage:
   1. Store materials in accordance with manufacturer's instructions.
   2. Store materials off ground and under cover.
   3. Protect materials from weather, direct sunlight, and construction activities.

C. Handling: Protect materials and finish during handling and installation to prevent damage.

PART 2 PRODUCTS

2.1 MANUFACTURER

A. Pella Corporation, 102 Main Street, Pella, Iowa 50219. Toll Free (800) 54-PELLA. Phone (641) 621-1000. Website www.pella.com.

2.2 FIBERGLASS FIXED FRAME WINDOWS

A. Fixed Frame Windows: Pella Impervia.
   1. Factory-assembled fixed frame window.
   2. Frame Material: Duracast. 5-layer, pultruded-fiberglass material, reinforced with interlocking mat.

B. Frame:
   1. Type: Block frame.
   2. Overall Frame Depth: 3 inches.
   3. Nominal Wall Thickness of Fiberglass Members: 0.050 inch to 0.080 inch.
   4. Frame Corners:
      a. Mitered.
      b. Joined and bonded with thermoset polyurethane adhesive, nylon corner lock, and mechanically fastened.
   5. Frame can be installed with glazing stop on interior or exterior (unit can be flipped to install in either direction).

C. Glazing:

1. Float Glass: ASTM C 1036, Quality 1.

   a. Tempered Glass: ASTM C 1048. Used in all 12054 and 54120 Windows.
2. Type: Polyurethane reactive (PUR) hot-melt glazed, 1-inch thick, insulating glass, argon-filled Low-E^2 tempered.

2.3 TOLERANCES

A. Windows shall accommodate the following opening tolerances:
   1. Vertical Dimensions Between High and Low Points: Plus 1/4-inch, minus 0 inch.
   2. Width Dimensions: Plus 1/4-inch, minus 0 inch.
   3. Building Columns or Masonry Openings: Plus or minus 1/4-inch from plumb.

2.4 FINISH

A. Exterior and Interior Duracast Finish: Factory-applied powder-coat paint, comply with AAMA 613.
   1. Color: Brown.

2.5 INSTALLATION ACCESSORIES

A. Flashing/Sealant Tape: Pella SmartFlash.
   1. Aluminum-foil-backed butyl window and door flashing tape.
   2. Maximum Total Thickness: 0.013 inch.
   3. UV resistant.
   4. Verify sealant compatibility with sealant manufacturer.

B. Exterior Perimeter Sealant: Geocel Proflex Tripolymer Sealant.

C. Insulating-Foam Sealant: Dow Chemical Great Stuff Window and Door Insulating Foam Sealant.
   1. Low-pressure, polyurethane window and door insulating-foam sealant.

D. Block Frame Installation Accessories: Vinyl installation fin.

PART 3 EXECUTION

3.1 EXAMINATION

A. Examine areas to receive windows. Notify Architect of conditions that would adversely affect installation or subsequent use. Do not proceed with installation until unsatisfactory conditions are corrected.

3.2 INSTALLATION

A. Install windows in accordance with manufacturer's instructions.

B. Install windows to be weather-tight.

C. Maintain alignment with adjacent work.

D. Secure assembly to framed openings, plumb and square, without distortion.

E. Integrate window system installation with exterior water-resistant barrier using flashing/sealant tape. Apply and integrate flashing/sealant tape with water-resistant barrier using watershed principles in accordance with window manufacturer's instructions.

F. Place interior seal around window perimeter to maintain continuity of building thermal and air barrier using insulating foam sealant.

G. Seal window to exterior wall cladding with sealant and related backing materials at perimeter of assembly.

3.3 CLEANING

A. Clean window frames and glass in accordance with Division 1 requirements.

B. Do not use harsh cleaning materials or methods that would damage finish or glass.

C. Remove labels and visible markings.

3.4 PROTECTION

A. Protect installed windows to ensure that, except for normal weathering, windows will be without damage or deterioration at time of substantial completion.

09 00 00 FINISHES

09 30 00 TILING

09 30 13 Ceramic Tiling

Since Oceanside Glasstile uses up to 85% recycled glass in some of their products, it has been specified for the bathroom. More details about the Oceanside Glasstile can be found on the following pages.

Oceanside Glasstile

by Tim McGee, Los Angeles on 06.21.05
DESIGN & ARCHITECTURE (materials)

It's not a competition or anything, but Oceanside Glasstile puts Terra Green, and Livingreen glass tiles in their place- holla. With a chart topping 85% recycled glass in 'some' of their products, they can claim king to the recycled glass pile. Their California environmental and artistic ethic has helped them become intuitive leaders in recycled materials & design. In their own words- "*Oceanside Glasstile's success stems from the marriage of glass tile technology and an enduring belief in the need for beauty in our everyday lives. Oceanside Glasstile's recycled glass tile products are an obvious choice for those who are environmentally aware but also desire beauty and style.* " We hear you, we hear you.
::Oceanside Glasstile

« previous post | home | related | next post »

[0] Comments | Related Tags:
HUGG THIS | DIGG THIS

Jump to Top

http://www.treehugger.com/files/2005/06/oceanside_glass.php 5/31/2007

TESSERA

MOSAIC BLENDS

create a custom blend | sizes | color palette

All Blends shown in 1" x 1" Mosaic Field. Most blends are also available in 1" x 2", 2" x 2", and 1¼" Hexagon Fields.
Tessera Mosaics are face-mounted on paper. Sheet measurements vary depending on pattern.

Veil
Oxygen Ind, Oxygen Matte, White Ind, White Matte
Available only in 1" x 1"

Blue Streak
Clear Non-Ind, Fleet Blue Ind, Palladium Ind

Nordic Ice
Bohemian Ind, Pearl Ind, White Ind

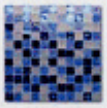

Glacier Ridge
Bohemian Ind, Clear Ind, Palladium Ind

Mediterranean Sea
Aqua Ind, Cobalt Ind, Emerald Ind
Available only in 1" x 1"

Arctic Sky
Bohemian Ind, Midori Ind, Pearl Ind

Puget Sound
Clear Ind, Equator Ind, Fleet Blue Ind, Oxygen Ind

Alpine Spring
Midori Ind, Pearl Ind, White Ind

Summer Isle
Clear Non-Ind, Equator Non-Ind, Oxygen Non-Ind

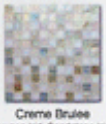

Creme Brulee
Oxygen Ind, Sandstone Ind, White Ind

Beach Blonde
Clear Ind, Moonstone Non-Ind, Sandstone Ind

Ice Tea
Cane Ind, Harvest Ind, Oxygen Ind

Suede
Cane Ind, Cane Matte, Harvest Ind, Harvest Matte
Available only in 1" x 1"

Copper Tone
Cane Ind, Harvest Ind, Incense Ind

Gold Coast
Amber Ind, Bronze Ind, Kashmir Ind

Cammie
Cane Matte, Harvest Ind, Olive Non-Ind
Available only in 1" x 1"

Enchantment
Cane Ind, Incense Ind, Olive Non-Ind

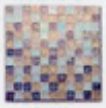

Escape
Cane Ind, Clear Ind, Fleet Blue Ind

Frontier
Cane Ind, Harvest Ind, Sandstone Ind

Shire
Fleet Blue Ind, Olive Ind, Tahoe Ind

Vogue
Oxygen Matte, Pewter Ind, Tahoe Non-Ind
Available only in 1" x 1"

Tapenade
Bronze Ind, Olive Ind, Olive Non-Ind

Mendocino
Cane Ind, Harvest Ind, Tahoe Ind

Moroccan Desert
Black Non-Ind, Bronze Ind, Pewter Ind

Northern Lights
Black Non-Ind, Incense Ind, Tourmaline Ind

Disco Inferno
Incense Ind, Red Ind, Red Non-Ind

Rave
Black Non-Ind, Pewter Ind, Red Non-Ind

Because photographic lighting and computer monitors may affect the look of our tile, we do not recommend placing orders based solely on the images shown. Please request a current sample from your tile showroom.

INSTALLATION

RECOMMENDED APPLICATIONS

The following use chart is a general guideline listing laboratory test results and typical applications; however, an architect should be consulted when specifying Oceanside Glasstile. Additionally, the environment, climate, maintenance and wear can affect the performance of all tile installations; therefore, Oceanside Glasstile suggests the end user verify the performance of all specified materials using a testing facility familiar with the tests necessary to satisfy the specification.

ASTM TEST RESULTS		FACETS & TESSERA			CASA CALIFORNIA & HAIKU	
TEST #	TYPE of TEST	Iridescent	Non-Iridescent	Palladium	Iridescent	Non-Iridescent
N/A	Moh's Scratch Hardness (1-10)	4	3	4	4	3
C1028	Static Coefficient of Friction	DRY = .76 WET = .60	DRY = .83 WET = .34	N/A	DRY = .73 WET = .60	DRY = .81 WET = .36
C424	Cracking Resistance (Steam)	No Affect, 1 Cycle @150 PSI				
C648	Breaking Strength (Bell)	>900 Pounds - Force				
C650	Chemical Resistance	No Affect, 7 Day Duration				
C373	Water Absorption	None, 0.05% Impervious				
C1026	Freeze-Thaw Resistance	No Deterioration to Tile				

RECOMMENDED APPLICATIONS		FACETS & TESSERA			CASA CALIFORNIA & HAIKU	
		Iridescent	Non-Iridescent	Palladium	Iridescent	Non-Iridescent
WALLS	Interior	●	●	●	●	●
	Exterior	●	●		●	●
FLOORS	Interior	●			●	
	Exterior	●			●	
COUNTERTOPS	Interior	●			●	
	Exterior	●	●		●	●
SUBMERGED	Interior	●	●		●	●
POSSIBLE APPLICATIONS		Residential Heavy	Residential Medium*	Residential Light	Residential Heavy	Residential Medium*

ASTM TEST RESULTS		ELEVATIONS		RITUAL FIELD	RITUAL MOSAIC
TEST #	TYPE of TEST	Iridescent	Non-Iridescent	Matte	Matte
N/A	Moh's Scratch Hardness (1-10)	4	3	5	5
C1028	Static Coefficient of Friction	DRY = .75 WET = .53	DRY = .73 WET = .42	DRY = .88 WET = .68	DRY = .88 WET = .68
C424	Cracking Resistance (Steam)	No Affect, 1 Cycle @150 PSI			
C648	Breaking Strength (Bell)	>900 Pounds - Force			
C650	Chemical Resistance	No Affect, 7 Day Duration			
C373	Water Absorption	None, 0.05% Impervious			
C1026	Freeze-Thaw Resistance	No Deterioration to Tile			

RECOMMENDED APPLICATIONS		ELEVATIONS		RITUAL FIELD	RITUAL MOSAIC
		Iridescent	Non-Iridescent	Matte	Matte
WALLS	Interior	●	●	●	●
	Exterior	●	●	●	●
FLOORS	Interior			●	●
	Exterior			●	●
COUNTERTOPS	Interior			●	●
	Exterior			●	●
SUBMERGED	Interior			●	●
POSSIBLE APPLICATIONS		Residential Heavy	Residential Medium*	Commercial Light**	Commercial Light**

*With no exterior entrance. **Limited to light pedestrian traffic; no metal wheeled carts.
NOTE: Oceanside Glasstile is not responsible for the accuracy of test results. Purchasers may have their individual orders tested by contacting the Tile Council of America (TCA) at 864-646-8453

PRODUCTS

SUSTAINABILITY

RECYCLED CONTENT

All Oceanside Glasstile is made primarily from silica sand, an abundant natural resource, with many colors also containing recycled content that may include pre-consumer*, post-industrial**, and/or post-consumer*** recycled bottle glass from curbside recycling programs. See the chart opposite for specific content by color.

*Pre-consumer materials are generated during our manufacturing process and may consist of scrap and trimmings that were never used in the consumer market.

**Post-Industrial: Material from manufacturing processes where virgin resources would otherwise go to waste. This material is collected and used in a product other than that for which it was originally used.

***Post-consumer material is an end product that has completed its life cycle as a consumer item and would otherwise have been disposed of as a solid waste. Oceanside Glasstile's post-consumer material is recycled bottle glass (cullet) from curbside recycling programs.

COLOR	PRE-CONSUMER*	POST-CONSUMER*	TOTAL RECYCLED CONTENT
Amber	0%	0%	0%
Aqua	0%	0%	0%
Black	13.2%	72.8%	86%
Bohemian	16.6%	58.2%	74.8%
Bronze	13.2%	72.8%	86%
Cane	30%	0%	30%
Clear	30%	0%	30%
Cobalt	12.8%	74.6%	87.4%
Equator	30%	0%	30%
Fleet Blue	30%	0%	30%
Harvest	0%	0%	0%
Incense	13.2%	72.8%	86%
Midori	16.6%	58.2%	74.8%
Moonstone	25.4%	20%	45.4%
Olive	30%	0%	30%
Oxygen	0%	0%	0%
Palladium	0%	0%	0%
Pearl	25.4%	20%	45.4%
Pewter	13.2%	72.8%	86%
Rainbow	13.2%	72.8%	86%
Sandstone	25.4%	20%	45.4%
Spruce	16.4%	59.2%	75.6%
Tahoe	30%	0%	30%
Tourmaline	13.2%	72.8%	86%
White	30%	0%	30%
COLOR	POST-INDUSTRIAL**	POST-CONSUMER*	TOTAL RECYCLED CONTENT
Red	58%	0%	58%

AESTHETICS AND QUALITY OF LIFE

Because of its handcrafted nature and broad range of translucent and iridescent colors, Oceanside Glasstile is an exceptionally beautiful building material an ideal choice for helping people create beautiful and comforting living spaces, conducive to health and productivity, all of which is part of green building.

DURABILITY AS PART OF SUSTAINABILITY

Glass tile is a very strong building material* that is impervious to water and heat/thaw resistant. This long-lasting durability further adds to its sustainability.

*For example, breaking strength on all 4" x 4" Field Tile is approximately 900 pounds per square inch of force.

Installation Guide

- Substrate Preparation
- Acceptable Setting Materials
- Paper-Faced Mosaic Installation
- Large Module Installation
- Pool & Submerged Applications

Oceanside Glasstile

www.glasstile.com

"The Sunset House"
PHOTOGRAPHER: Christopher Ray Photography
TILE SHOWN: Tessera 1" x 2" mosaic in Sandstone #05

Contents

TOLL FREE ASSISTANCE
Technical Support (877) 648-8222
General Information (866) 648-8453

Thank you for choosing Oceanside Glasstile®

We are committed to providing the highest level of technical service to help make your installation of our products as straightforward as possible, with optimal and beautiful results. To ensure your satisfaction we include installation instructions with your order. In this Installation Guide, we'll take you through detailed, step-by-step, illustrated installation instructions including user-friendly tips, how to maintain your installation and frequently asked questions. More detailed information is also available at our website, **www.glasstile.com.**

Installation Instructions and Specifications

These instructions are provided as a general guideline for installing Oceanside Glasstile; some installations require different or more detailed specifications. An experienced, professional tile installer who is familiar with the following procedures should perform the work. Please read and understand these instructions before beginning any work.

Verifying Dye Lot Consistency

The owner or end user is responsible for determining the acceptability of the product. Due to the handmade, artistic nature of our product, variations in color, shade, tone, and size is normal. Open and inspect each box of tile upon delivery to verify dye lot consistency in the following manner:

Select five sheets (Facets, Ritual or Tessera paper-faced mosaics) or 5 pieces of field tile (Casa California, Haiku, Minerali, Ritual or Terrain) to establish color control. During installation check the field tile or sheets against control samples from those received in your order to assure shade variations are acceptable prior to installation. If ordering additional materials, samples should be sent to help match previously ordered material.

STOP! No adjustments will be made after installation.

TIPS TO ACHIEVE BETTER INSTALLATIONS

- All mortar beds should cure no less than 7 days prior to glasstile installation.
- All glasstile installations benefit from extended cure times (48 hours or longer) prior to grouting or foot traffic.
- All submerged or heavy water use applications should cure no less than 21 days after grouting before submersion or heavy water use.

IMPORTANT: PLEASE NOTE
All Facets, Ritual, and Tessera Mosaics are paper face-mounted sheets. Install with the paper side up.

Substrates

The performance of a properly installed thin-set tile application is dependent upon the durability and dimensional stability of the substrate to which it is bonded. The following recommendations are from the Tile Council of America (TCA) Handbook for Ceramic Tile Installation 2005 and are general in nature. (www.tileusa.com)

FLOORS

1. **Exterior:** Concrete slab cured 28 days minimum, follow **TCA F102-05** (recommended for freeze-thaw areas)
2. **Interior:** Concrete **TCA F111-05, F112-05** or **F113-05.** Additional preparation may be necessary depending upon its condition (See Anti-Fracture/Waterproofing Membranes on page 5.). Cement mortar beds should be cured a minimum of 7 days.
3. **Interior Wood Sub-Floors:** Cement mortar **TCA F145-05** or cement backer board **(CBU) TCA F144-05.**

WALLS

1. **Exterior and Interior:** (masonry or concrete) **TCA W201-05, W202-05, W211-05** or **W231-05**
2. **Interior Metal Studs: TCA W241-05** (must meet **ASTM C955** or **ASTM C645**) or cementitious board units over wood or metal stud* **(CBU) TCA W244-05**
3. **Wood or Metal Studs:** under gypsum board in dry areas only **TCA W243-05**

SPECIALTY

1. **Bathtub Walls:** (wood or metal studs, cement mortar beds cured 7 days) **TCA B411-05** or **(CBU) TCA B412-05**
2. **Shower Receptors, Walls:** (wood or metal studs, cement mortar beds cured 7 days) **TCA B414-05** or **(CBU) TCA B415-05**
3. **Countertops:** (cement mortar beds cured 7 days) **TCA C511-05** or **(CBU) C513-05**
4. **Swimming Pools:** (cement mortar beds cured 7 days) **TCA P 601-05**

***Membrane (ANSI A.2.1.8) of # 15 roofing felt or 4-6-mil polyethylene film is required behind CBU. All joints on CBU should be taped with the CBU manufacturers' recommended mesh tape and allowed to cure 24-48 hours prior to installation.**

ADDITIONAL SPECIFICATIONS ARE AVAILABLE UPON REQUEST.

STOP! UNACCEPTABLE SUBSTRATES

- **Single-float mortar bed walls not employing cured scratch coats**
- **Poultry netting (chicken wire) or metal lath less than 2.5 lbs. per square yard in wire reinforced mortar beds**
- **Wood products, such as plywood, luan, MDF, MDX, press board and composites**

Setting Materials

All materials should be used according to manufacturer's directions. Due to the translucent nature of glass, the color of the bonding material will impact the ultimate look of the tile. We recommend the use of specific white bonding mortars, some mixed with specific latex admix. See the following list for required thin-sets and follow manufacturer's recommended cure times for all setting materials. Pools, spas and all submerged applications require a minimum 21-day cure time after grouting and before submersion or exposure to heavy water use.

Although we require the use of the highest performing setting materials for installing our products, occasionally, due to the transparent and/or light translucent nature of some of our products, visible effects, also known as "Ghosting," may occur behind the glass. This is a normal occurrence and should not be considered a manufacturing problem with the glass tile.

ACCEPTABLE SETTING SYSTEMS

*Select one of these required **(white)** Thin –Set Mortar Systems*

- **Custom Building Products:** Premium Plus Thin-Set Mortar (white) mixed with Custom Flex Ultra-Strength Thin-Set Additive
- **Custom Building Products:** MegaFlex Ultimate Thin-Set Mortar (white). No admixture is necessary.
- **Custom Building Products:** MegaLite Crack Prevention Mortar. No admixture is necessary.
- **Flextile:** 52 Versatile Floor Mortar. No admixture is necessary.
- **Hydroment:** ReFlex Ultra-Premium Latex-Modified Thin Set Mortar. No admixture necessary.
- **KeraKoll:** H40 Tenax Single Component Thin-Set (white) No admixture necessary.
- **Laticrete:** 254 Platinum Multipurpose Thin-Set Mortar. No admixture necessary.
- **MAPEI:** Kerabond Premium Dry-Set Mortar (KER 102) mixed with Keralastic Mortar Admix (KER 310)
- **TEC (H.B. Fuller):** Super Flex Premium Performance Universal Latex-Modified Thin-Set Mortar. No admixture is necessary.

CAUTION: When mixing setting and grouting materials with electrical mixing devices do not exceed 300 RPM or the manufacturer's recommendations. All adhesives need to slake (sit) 10-15 minutes after mixing, and remixed before using.

STOP!

UNACCEPTABLE SETTING MATERIALS

- **Organic adhesive (mastic), due to yellowing and low bond strengths.**
- **Epoxy, due to low flexibility, as well as degradation in UV sunlight.**

GROUT

Install grout mix according to manufacturer's instructions. Grout joints shall be full and uniformly finished. Due to the impervious quality of glass, the grout will take longer to begin setting up as compared to a more porous material like ceramic tile. For initial cleaning of grout from the tile face, use clean, dry cheesecloth. This method will wick additional moisture from the grout and avoid washing out the grout joints. Use only a clean, damp sponge for the final washing and smoothing of the grout joints. For final polishing of excess grout haze use a clean, soft cloth.

Do not use Blue or Green Grout in submerged applications.
We recommend standard sanded grout products.

- **Custom Building Products:** Polyblend Sanded Tile Grout
- **Custom Building Products:** Prism SureColor Grout
- **Flextile:** 600 Polymer Sanded Floor Grout
- **Hydroment:** Sanded Ceramic Tile Grout
- **KeraKoll:** Fugabella 2-12
- **Laticrete:** 1500 Series Tile Grout or equivalent
- **MAPEI:** Ker 200 Series and Ker 700 Series Ultra/Color
- **TEC:** Accucolor Premium Sanded Tile Grout

NOTE: *An acrylic grout admix can improve freeze-thaw resistance. Check with the manufacturer for their recommendation on specific applications.*

STOP!

UNACCEPTABLE GROUT

- **Epoxy grout, due to low flexibility, as well as degradation in UV sunlight.**

Technical Information

ANTI-FRACTURE/WATERPROOFING MEMBRANES

- **Custom Building Products:** RedGard Waterproofing and Crack Prevention Membrane
- **Hydroment:** Gold Anti-fracture and Waterproofing Membrane
- **Laticrete:** 9235 waterproof & anti-fracture membrane
- **TEC:** TA-324 Triple-Flex waterproofing/crack isolation membrane

STOP!

MEMBRANES WITH TRANSPARENT GLASS TILE

Oceanside Glasstile does not recommend membranes directly behind the setting material when installing transparent glass (glass tile you can see through) in wet areas. Membrane manufacturers' recommendations for submerged and below grade installations vary dramatically. Consult each manufacturer for specific recommendations prior to use for submerged and below grade applications.

MOVEMENT JOINTS

Expansion joints are essential for the success of most tile installations. Follow instructions on Expansion Joints **EJ 171-05** or current year instructions in the Handbook for Ceramic Tile Installation published by the Tile Council of America. Expansion joint requirements will vary depending on substrata, climate, and size of installation. An architect should be consulted when specifying the exact number and location of each expansion joint.

Flexible Joint Fillers

- **Hydroment:** Chem-Calk 900 One-Part Urethane Sealant
- **KeraKoll:** Sigibuild PU Poly-Urethane Sealant
- **Laticrete:** Latasil NS (non-sag), Latasil SP (floors)
- **Sikaflex:** 1A or 2C Polyurethane-based Sealant

Certain applications may require a different type of sealant.

CUTTING AND DRILLING

Oceanside Glasstile's products can be cut to meet job site dimensions with the use of a high quality wet tile saw. We recommend a continuous, smooth-rim diamond blade designed for cutting glass, such as the 10" Alpha Vetro or the 10" MK - 215 GL. Special glass mosaic tile nippers or glass rod loppers (available from stained glass supply shops) work well when hand cutting our mosaic tile. You can purchase a pair from your local Oceanside Glasstile distributor using OGT Item # 1950.

To successfully drill the glass tile, a water swivel and fractional core bit work best. (See the Drilling Instructions on page 10.)

***For a listing of manufacturers of required setting materials and recommended products, please refer to page 12.**

Test Results & Recommended Applications

The following use chart is a general guideline listing laboratory test results and typical applications; however, an architect should be consulted when specifying Oceanside Glasstile. Additionally, the environment, climate, maintenance and wear can affect the performance of all tile installations; therefore, Oceanside Glasstile suggests the end user verify the performance of all specified materials using a testing facility familiar with the tests necessary to satisfy the specification.

ASTM TEST RESULTS		CASA CALIFORNIA & HAIKU		MINERALI	RITUAL FIELD	RITUAL MOSAIC	TESSERA		
TEST #	TYPE of TEST	Iridescent	Non-Iridescent	Abrasive	Matte	Matte	Iridescent	Non-Iridescent	Palladium
N/A	Moh's Scratch Hardness (1-10)	4	3	9.5	5	5	4	3	4
C1028	Static Coefficient of Friction	Dry = .73 Wet = .60	Dry = .81 Wet = .36	Dry = .88 Wet = .82	Dry = .88 Wet = .68	Dry = .79 Wet = .60	Dry = .76 Wet = .60	Dry = .83 Wet = .34	N/A
C424	Crazing Resistance (Steam)	No Affect, 1 Cycle @150 PSI							
C484	Thermal Shock Resistance	No Deterioration to Tile							
C648	Breaking Strength (4x4)	>900 Pounds - Force							
C650	Chemical Resistance	No Affect, 7 Day Duration							
C737	Water Absorption	None, 0.05% Impervious							
C1026	Freeze-Thaw Resistance	No Deterioration to Tile							

RECOMMENDED APPLICATIONS		CASA CALIFORNIA & HAIKU		MINERALI	RITUAL FIELD	RITUAL MOSAIC	TESSERA		
		Iridescent	Non-Iridescent	Abrasive	Matte	Matte	Iridescent	Non-Iridescent	Palladium
WALLS	Interior	●	●	●	●	●	●	●	●
	Exterior	●	●	●	●	●	●	●	
FLOORS	Interior	●		●	●	●	●		
	Exterior	●		●	●	●	●		
COUNTERTOPS	Kitchen	●		●	●	●	●		
	Powder Room	●	●	●	●	●	●	●	
SUBMERGED	Pools & Fountains	●	●	●	●	●	●	●	
POSSIBLE APPLICATIONS		Residential - Heavy	Residential - Medium*	Commercial - Light**	Commercial - Light**	Commercial - Light**	Residential - Heavy	Residential - Medium*	Residential - Light

*With no exterior entrance. **Limited to light pedestrian traffic; no metal wheeled carts.
NOTE: Oceanside Glasstile is not responsible for the accuracy of test results. Purchasers may have their individual orders tested by contacting the Tile Council of America (TCA) at 864-646-8453

Mosaic Installation

Paper-faced Mosaics – Facets™, Ritual™ & Tessera

1 STEP Using the flat side of a trowel to initiate the bond coat, firmly apply the setting material to the substrate.

2 STEP With additional setting material, using a 3/16" x 1/4" V-Notch trowel, comb horizontal, full notches in one direction to establish the proper depth of the setting bed.

3 STEP Using the flat side of the trowel, flatten the notches to achieve a smooth, consistent setting bed approximately 1/8" thick.

4 STEP Apply sheets into the setting bed (paper side towards you), using light even pressure to establish contact and eliminate any voids.

5 STEP To achieve a uniform surface, tap lightly using a wooden beating block and a hammer.
CAUTION: DO NOT USE RUBBER FLOATS OR STEEL TROWELS FOR THIS STEP.

6 STEP Apply each subsequent sheet so that grout joints line up and a consistent field is maintained.
Prior to setting each sheet, check the setting bed for skinning (slight drying of the thin set surface). If skinning occurs, remove thinset and repeat steps 2 & 3.

7 STEP To unify the tile surface from one sheet to the next, use a wooden beating block and hammer, again lightly tapping from one sheet to the next.

8 STEP After 15-30 minutes (floors can be removed sooner) lightly wet paper several times over a 5 – 10 minute period.
TIP: TO INCREASE WATER ABSORPTION TRY USING WARM WATER OR DIF WALLPAPER REMOVER (FOLLOWING INSTRUCTIONS ON PACKAGE).

9 STEP After water has absorbed into paper, the glue will release from the mosaics. Peel paper starting at the corner of the sheets. Removing paper while the setting material is still in a semi-fresh/flexible state allows for necessary adjustments and reassures dye lot color consistency.

TRADE SUPPORT AT WWW.GLASSTILE.COM 6 TOLL FREE TECH SUPPORT 877-648-8222

Mosaic Installation

Paper-faced Mosaics – Facets™, Ritual™ & Tessera

STEP 10 Straighten individual tiles prior to final set with the goal of creating a consistent, overall field of mosaics. Pay particular attention to the joints between sheets to eliminate the sheet pattern.

STEP 11 Cure a minimum of 48 hours prior to cleaning. Using a nylon brush and water, scrub residual paper and glue from the tile, followed by wiping clean with a damp sponge. Allow to dry prior to grouting.

STEP 12 Use only standard grade sanded grout mixed per manufacturer's instructions. Apply grout with a rubber float, forcing grout into joints until full.

STEP 13 Grout joints shall be full. Due to the impervious quality of glass, the grout will take longer to set than with more porous materials. For initial cleaning use clean, dry cheesecloth. This method wicks additional moisture from the grout and avoids washing out the grout joints.

STEP 14 Allow grout joints to set up (turn dull) and smooth finish with a damp sponge.

STEP 15 For final polishing of excess grout haze use a clean, soft cloth.
TIP: AFTER 48 HOURS OF CURING, A CLEANING SOLUTION SUCH AS LIQUID DISH SOAP AND WARM WATER OR STONE AND TILE STRIPPER CAN BE USED FOR FINAL CLEANING.

Large Module Installation

Casa California®, Haiku™, Minerali™, Ritual™ & Terrain™

STEP 1 Using the flat side of a trowel to initiate the bond coat, firmly apply the setting material into the substrate.

STEP 2 With additional setting material, using a 1/4" x 1/4" square-notch trowel, comb the notches full to establish the proper depth of the setting bed.

STEP 3 Using the flat side of the trowel, again flatten the notches to achieve a smooth, consistent setting bed approximately 3/16" thick.

STEP 4 Thoroughly clean the back of each tile using a dry cloth. Never wet the tile prior to setting.

STEP 5 Back butter each tile using additional setting material. Verify that 100% coverage has been achieved by checking the face of the tile before setting.

STEP 6 Apply the tile into the setting bed using firm, even pressure.

STEP 7 Remove excess setting material from the edges and space a minimum of 1/8" between tiles.
TIP: FOR LINERS AND DECOS WITH DETAILED SURFACE DESIGNS, COVER WITH MASKING TAPE TO AVOID THE NEED FOR EXCESSIVE CLEANING. KEEP TAPE ABOVE THE PLANE OF DESIRED GROUT HEIGHT.

STEP 8 Allow tile to cure a minimum of 48 hours prior to cleaning and grouting. Use only standard grade sanded grout mixed to manufacturer's instructions. Apply grout with a rubber float, forcing grout into joints until full.

STEP 9 Grout joints shall be full. Due to the impervious quality of glass, the grout may take longer to set than with more porous tile. For initial cleaning use clean, dry cheesecloth. This method wicks additional moisture from the grout and avoids washing out the grout joints.

TRADE SUPPORT AT WWW.GLASSTILE.COM 8 TOLL FREE TECH SUPPORT 877-648-8222

Large Module Installation

Casa California®, Haiku™, Minerali™, Ritual™ & Terrain™

10 STEP

Allow grout joints to set up (turn dull) and smooth finish with a damp sponge.

11 STEP

For final polishing of excess grout haze, use a clean, soft cloth. Remove the masking tape and complete polishing.
TIP: AFTER 48 HOURS OF CURING, A CLEANING SOLUTION SUCH AS LIQUID DISH SOAP AND WARM WATER OR STONE AND TILE STRIPPER CAN BE USED FOR FINAL CLEANING.

Crown Cap Installation

1 STEP

Thoroughly clean the back of the crown cap using a soft dry cloth. Back butter each tile with setting material.
CAUTION: DO NOT FILL THE RADIUS OF THE TILE AS EXCESSIVE SETTING MATERIAL MAY SHRINK AND CAUSE CRACKING.

2 STEP

Apply a small amount of setting material to the outside ends of the large radius. Apply additional setting material to the top and bottom edges where contact will be established.

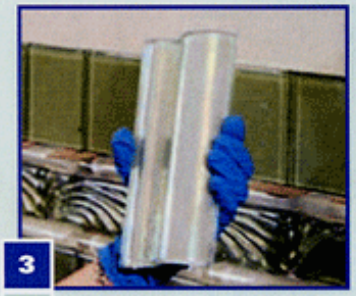

3 STEP

Verify that 100% coverage has been achieved by checking the face of the tile before setting.

4 STEP

Apply the tile into the setting bed using light, even pressure to establish contact and eliminate any voids.

Remove excess setting material from the edges and space a minimum of 1/8" between tiles. Cure a minimum of 48 hours prior to cleaning and grouting.

5 STEP

Drilling Instructions

CAUTION: Always use safety equipment while drilling Oceanside Glasstile

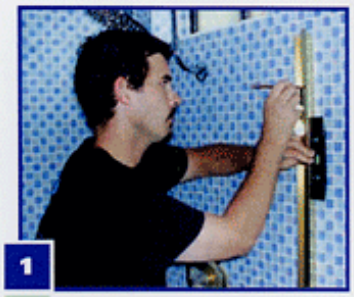

STEP 1 Use a level to mark drilling locations.

STEP 2 Prior to using a fractional core bit mark and drill a shallow pilot hole using a carbide or diamond tipped masonry drill bit. Start pilot holes slowly to avoid excess heat.
TIP: SAVE TIME BY DRILLING ALL PILOT HOLES AT ONE TIME.

STEP 3 Connect water swivel to drill motor. Connect fractional core bit to swivel. Connect water source and open water control valve on swivel until water trickles out. Keep bit aimed into a drain or bucket until you are ready to drill.

STEP 4 Hold firmly and begin drilling slowly at first. Gradually increase the speed. Continue with steady pressure until desired depth is achieved.

Pool Installations

The following information relates to proper installation materials and techniques for pools installed over gunite tanks with Oceanside Glasstile products.

Follow the Tile Council of America's specification for pool substrates P601-05.

- Cure mortar beds a minimum of 7 days prior to setting the glass tile with one of the recommended setting systems found on page 4 of these installation instructions.
- The ideal setting temperature range for latex modified setting material is 50° – 90°F. Always shade the installation from direct sunlight and wind using awnings or umbrellas.

STOP!

MOVEMENT PROVISIONS

Caulk is required for residential pools between the tile and the decking or coping, to all inside corners, and every 12' - 16' on center vertically in the grout joint.

Maintenance

New Installations

- Wait to clean new installations for a minimum of 24 hours after completing the grouting process.
- After 24 hours remove loose dirt by vacuuming or sweeping.
- Prepare a cleaning solution using warm water and a liquid dish soap or a neutral pH cleaner. Thoroughly clean the glass tile, including the grout joints, using a nylon scrub brush or nylon scrub pad.
- Rinse with clean water and towel dry. A second rinsing may be needed.

Installations after grout has cured ten days and existing installations

- Use the following method for cleaning cement based grout or setting material haze that require a stronger cleaning solution. Wait 10 days after the grout has been installed then use a Sulfamic Acid cleaner such as C-Clean or Custom Clean. Follow the manufacturer's directions using a nylon scrub brush or nylon scrub pad.
  TIP: Try applying the solution and allowing it to soak in for 3-5 minutes followed by re-applying and scrubbing.
- Rinse thoroughly with clean water and towel dry. A second rinsing may be needed to completely remove the cleaning solution.

Additional cleaning for latex based smears

- Stone and tile strippers will work to clean latex smears not removed by acid based cleaners. Follow grout manufacturer's cure times and directions prior to use.
- Rinse thoroughly with clean water and towel dry. A second rinsing may be needed.

Recommendations

- Sealers are beneficial for grouts; however, they will not penetrate the tile due to the impervious nature of glass. Consult grout manufacturers for their recommendations.
  TIP: To reduce the possibility of sealer smears, buff sealer off glass tile with dry, clean towels before it dries.
- Always test a product on your tile installation in an inconspicuous area before treating the entire tile installation.
- Protect surrounding non-tiled surfaces when using recommended products for tiled areas. Tile cleaning and maintenance products can adversely affect some materials such as metals, woods, and other surfaces.
- When using cleaning products always follow manufacturer's directions and use personal protection equipment.

GENERAL CLEANING	
	• Warm water and liquid dish soap or a neutral pH cleaner.
	• Tubs and Showers: DESCUM Soap Scum Remover & Renovator
	• Pools and Water Features: Descale-It Pool & Spa Cleaner

Frequently Asked Questions

Substrates

Q. Is plywood a good setting surface for glass tile?
A. No, although it is believed by some tile installers to be an acceptable substrate, plywood's high degree of expansion and contraction makes it a poor choice with Oceanside Glasstile products.

Q. Are drywall, sheet rock, green board or blue board acceptable setting surfaces in DRY areas?
A. Yes, traditionally Oceanside Glasstile recommends cementitious board units (CBU, Wonder Board, Hardi Backer) and wire-reinforced mortar beds, cured 7 days prior to installation, for most applications. For wall installations in interior DRY AREAS, drywall is widely accepted as a substrate; however, a professional evaluation should be made to ensure that the installation will not be subjected to moisture.

Q. How long should concrete cure prior to installing Oceanside Glasstile?
A. The tile industry minimum standard for concrete is 28 days. For cold exterior and high moisture climates the cure times can extend to 60 days or more.

Setting Materials

Q. Are Ceramic Tile or Marble Mastics (organic adhesives) appropriate for installing Oceanside Glasstile products?
A. No, mastics result in very low bond strengths and consequently are not recommended for glass tile by most mastic manufacturers. In addition, discoloration and yellowing will occur behind Oceanside Glasstile's translucent glass tile within a short period of time.

Q. Can the setting material be tinted to change the overall appearance of my Oceanside Glasstile installation?
A. Yes, however, this recommendation must come from the setting material manufacturer as Oceanside Glasstile does not recommend altering another manufacturer's products, nor does Oceanside Glasstile recommend setting our products in grout.

Mosaic Installation - Facets, Ritual and Tessera

Q. Why does Oceanside Glasstile recommend tapping a wooden beating block with a finish hammer on the paper face of glass mosaics prior to removing the paper and making adjustments instead of using metal trowels or grout floats for this purpose?
A. The wooden beating block and hammer method offers the best result for smoothness and bonding. Metal trowels and rubber floats have too much flexibility, which can create an uneven surface.

Q. How long should I wait to remove the paper?
A. About 15 - 30 minutes is normal depending on the climate and job site conditions. Removing the paper at this stage is very important for making the adjustments necessary to achieve the highest quality Mosaic installations.

CAUTION: Removing paper while the setting material is still in a semi-fresh/flexible state allows for necessary adjustments and reassures dye lot color consistency. Waiting to remove the paper until the next day prohibits making desired adjustments.

Large Module Installation - Casa California, Haiku, Minerali, Ritual and Terrain

Q. What are the advantages of flattening the notch lines in the thin-set bed as part of the setting process?
A. Flattening the notch lines will reduce the possibility of voids or air pockets in the setting bed behind the tile, and increase the overall bond strength.

To locate the required setting materials and recommended products please contact the manufacturers:

Alpha Professional Tools 800-648-7229
www.alpha-tools.com

Custom Building Products 800-272-8786
www.custombuildingproducts.com

Descale-it 520-294-5676
www.descale-it.com

Flextile 800-699-3623
www.flextile.net

Hydroment Bostik 888-592-8558
www.bostik-us.com

Laticrete 800-243-4788
www.laticrete.com

MAPEI 800-426-2734
www.mapei.com

MK Diamond 800-845-3729
www.mkdiamond.com

National Chemical Laboratories (DESCUM) 800-628-2436
www.nclonline.com

Sikaflex 800-933-7452
www.sikaconstruction.com

TEC (H.B. Fuller) 800-323-7407
www.hbfuller.com

09 60 00 FLOORING

09 62 00 SPECIALTY FLOORING

09 62 23 Bamboo Flooring

Bamboo is a fast-growing plant, acting more like a grass than like a tree. Therefore, bamboo is very sustainable, aesthetically pleasing, durable, resistant to liquid and stains, and warp resistant. All this makes it an ideal flooring material. More details can be found on the following pages.

GREEN BUILDING SUPPLY
Environmentally Friendly Home Center

Contact Us
Log In


Air and Water Purification


Natural Flooring


Non-Toxic Finishes


Environmentally Friendly Cleaners

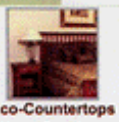
Eco-Countertops Wood Furniture


Wool Carpeting


Energy & Water Conservation

search Go

WHAT'S NEW?

New Ayurveda Essence paint from AFM Safecoat creates better health through color

Stunning Pre-fabricated Bamboo Countertops

Deep Penetrating Colored Sealers for Concrete &Stucco

IQ Air Purifier rated #1

Bamboo Species: Phyllostachis Pubescens (common name: Moso)

Hardness: Testing to ASTM 1037 procedures, bamboo displays an average hardness of 1642, which is harder than Red Oak and Rock Maple.

Adhesive: With 0.02 mg formaldehyde per cubic meter of air, the adhesive off-gasses 6.5 times less formaldehyde than allowed under the stringent European (E1) standards, which are 0.13 mg per cubic meter of air. European standards are stricter than U.S. standards.

Dimensional Stability: Bamboo flooring produced a dimensional change coefficient of .00144 making it 2.5 times more stable than commonly used wood flooring.

Flammability: Using ASTM E648 Critical Radiant Panel Test, treated bamboo flooring passes with a Class 1 rating according to the NFPA "Life Safety Code,"making it usable in all buildings.

Smoke Density: Testing to ASTM E622 where passing is 450 or less, bamboo flooring passes with a 270 rating in flaming mode, and a 330 rating in non-flaming mode.

Compressive Strength: Testing to ASTM 3501-86 A produced:

Compression parallel to grain: 7600 PSI

Compression perpendicular to grain: 2624 PSI

Modulus of Elasticity: 940,000 PSI

Adhesive Specifications: With 0.02 mg formaldehyde per cubic meter of air, the adhesive used to laminate the bamboo strips which form WFI flooring off-gasses 6.5 times less than allowed under the stringent European (E1) standards which are 0.13 mg per cubic meter of air. The European standards more strict than U.S. standards.

In November 1987, OSHA proposed the occupational standard for formaldehyde exposure be reduced from 3 parts per million (ppm) to 1 ppm, averaged over an 8-hour workday; this proposal became law. In May 1992, the law was amended with the formaldehyde exposure limit reduced to 0.75 ppm (This information can be obtained through the Occupational Safety and Health Administration, Public Affairs Office, Room N3647, 200 Constitution Avenue, NW., Washington, DC 20210. Phone: 202-693-1999.) Given .75ppm regulations

About Bamboo

How to Install Bamboo Flooring

Bamboo Manufacturing

Bamboo Maintenance

Bamboo Specifications

Bamboo Adhesive Specs.

Bamboo Warranty

Bamboo Strand Specs

Bamboo Strand Installation, Maintenance & Warranty

Print

and .0155 for WFI adhesive product, WFI is 48 x less than the allowance by American standards.

Conversion to Parts Per Million by Volume: Conversions from "0.02 mg of formaldehyde per cubic meter of air" to" ppmv (parts per million by volume).",

At ambient air pressure of 1 atmosphere and a temperature of 60 degrees F (15.56 degrees C), 0.02 mg of formaldehyde per cubic meter of air = 0.0149 ppmvme)."

At ambient air pressure of 1 atmosphere and a temperature of 70 degrees F (21.11 degrees C), 0.02 mg of formaldehyde per cubic meter of air = 0.0152 ppmv

At ambient air pressure of 1 atmosphere and a temperature of 80 degrees F (26.67 degrees C), 0.02 mg of formaldehyde per cubic meter of air = 0.0155 ppmv

The molecular weight of formaldehyde, at 30.03, was used in the conversions.

GREEN BUILDING SUPPLY
Environmentally Friendly Home Center

508 N. 2nd Street, Fairfield IA 52556
Call Toll Free: 1-800-405-0222 Fax: 641-469-5601
Showroom Hours: 9AM to 5PM M-F CST.

info1@greenbuildingsupply.com

Put a little green in your life!

http://www.greenbuildingsupply.com/utility/showArticle/?objectID=802 5/31/2007

09 90 00 PAINTING AND COATING

09 91 00 PAINTING

09 91 23 Interior Painting

AFM Safecoat is the leading provider of environmentally responsible, sustainable, and non-polluting paints, stains, wood finishes, sealers, and related green building products. More details can be found on the following pages. Its MSDS can be found on pages 60 to 61.

safecoat

Building a Healthier World.™

AFM Color Stories :: Products :: Dealer Locator :: Testimonials :: Projects :: Resources :: News & Press

We Put Your Health First

At Safecoat®, protecting personal health has always been our first priority. That's why for over 25 years we've been working to develop the safest, highest quality and least toxic paints and building products. Today AFM safecoat is the leading provider of environmentally responsible, sustainable and non-polluting paints, stains, wood finishes, sealers and related green building products.

The Safecoat® Difference

Many so-called "Zero VOC" products on the market reduce emissions that cause outdoor air pollution, but still contain a host of unregulated toxic ingredients (such as formaldehyde, ammonia, acetone, exempt solvents and odor masking agents) that cause indoor air pollution.

Safecoat® products go much further to protect your health. In addition to meeting the highest standards of environmental responsibility, we also eliminate toxic ingredients such as solvents, heavy metals, chemical residuals, formaldehyde and other harmful preservatives.

Our products are structured to literally create a "safe coat," with a unique molecular formulation designed to seal surfaces (from wood to metal to concrete, carpets, and much more), thus reducing "offgassing," or the emission of toxins into your environment.

We set the standard for protecting personal health through reduced toxicity. You can breathe easier with Safecoat® — because we take health seriously.

See our new Ayurveda Essence Color Collection

SCS Indoor Advantage CERTIFIED INDOOR AIR QUALITY GOLD

Recipient of the Scientific Certification Systems' Indoor Air Quality Gold certification, for achieving the most stringent indoor air quality objectives in North America.

Check out our latest NEWS

safecoat

Building a Healthier World.™

AFM Color Stories :: Products :: Dealer Locator :: Testimonials :: Projects :: Resources :: News & Press

Safecoat Paints & Primers

We're the best primer & paint choice for personal health especially for the chemically sensitive and we're proud to be one of the only doctor recommended paints on the market. You'll breathe easier knowing that our unique formulation helps block toxic emissions from seeping into your environment. Plus, our premium quality produces beautiful results. You don't have to give up style for health with our vast spectrum of contemporary and traditional colors. No animal testing ever.

Shortcut to:
New Wallboard Primecoat HPV > | Transitional Primer > | MetalCoat Metal Primer > | Zero VOC Flat > | Flat Enamel > | Zero VOC Eggshell > | Eggshell Enamel > | Zero VOC Semi-Gloss > | Semi-Gloss Enamel > | Trim and Door Enamel > | All Purpose Exterior Satin > | Concrete/Floor Paint >

Safecoat®

Eggshell Zero VOC *Interior*

DESCRIPTION: Safecoat Eggshell Zero VOC is a premium quality, fast curing enamel designed for interior surfaces where an eggshell finish and superior film formation properties are needed. It is particularly well suited for areas in which the health of the occupants is a concern: schools, hospitals, homes, offices - anywhere people want to reduce their exposure to toxic chemicals. Safecoat paints have almost no odor during application and are odor free once cured. They contain no formaldehyde, ammonia, crystalline silica, or ethylene glycol.

USE ON: Walls, ceilings, wallboard, properly cured and primed plaster, masonry and primed metal.

PRODUCT NUMBER AND CONTAINER SIZE:
14216 (quart), 14116 (gallon) and 14316 (five gallon).

ADVANTAGES / SIGNIFICANT BENEFITS:
- Superior, durable finish. Fully tintable to all pastel colors (some colorant systems may add a small amount of VOC).
- Safely used by and for the chemically sensitive.
- Low odor, non-offensive to installer and occupant.
- Fights indoor air pollution, limits outgassing from the substrate.
- Zero VOC content, meets or exceeds all federal and state air quality regulations, including California.

SURFACE PREPARATION: Careful surface preparation is the most important part of painting. Surfaces to be coated with Safecoat Eggshell Zero VOC should be sound and cleaned of dirt, grease and oil. Cleaning with an odorless, dye-free, all-purpose cleaner like ***SafeChoice Super Clean*** is recommended. Previously painted surfaces in poor condition should be scraped, sanded smooth, and primed with a coat of ***Safecoat Transitional Primer***. Always test for adhesion over prior coatings (water based paints do not adhere well to oil based finishes without removal or careful surface preparation, for example). New wallboard or sheetrock should first be coated with ***Safecoat New Wallboard Primecoat HPV***. Porous new wood should be sealed and sanded before priming, preferably with a safe product such as ***Safecoat Transitional Primer***. Water and other stains must be blocked so they do not bleed through. The best finish will be achieved with a primer and two finish coats. Environmental conditions are crucial: if the air temperature is too hot or too cold, the product will not cure properly; if the air or the wood is too dry, or there is too much moisture in or on the surface, other problems may result. In addition, many surfaces contain water-soluble tannins or acids which are activated by the application of a water based product and will "bleed through" to the surface. All of these conditions can be avoided with proper preparation. Finally, Safecoat products are formulated to work together. Optimum results are best obtained by using a Safecoat primer, for example, before applying Safecoat paint. Of course, always read the application instructions before beginning the job.

APPLICATION: Always have adequate ventilation. The surface should be completely dry before application. Before using, stir well, then apply as is, using a high quality nylon or synthetic bristle brush or roller of appropriate nap (1/4"-3/8" nap recommended). Do not apply in thick films or load paint onto the surface; thin coats are better than one thick coat. For spraying, reduce with up to 1/2 pint of water per gallon. Use an airless sprayer, minimum 2000 p.s.i., with a .015-.017 tip. Use a 60 mesh filter. When spraying, do not substitute backrolling for a second coat. Always use a painter's mask when spraying.

COVERAGE: One gallon of Safecoat Eggshell Zero VOC covers approximately 350 square feet in one coat depending on surface porosity. Untreated drywall will require several coats.

CLEAN-UP: Clean tools and equipment while they are still wet with a solution of ***SafeChoice Super Clean*** and warm water.

DRYING/CURING TIME: Under normal conditions, Safecoat Eggshell Zero VOC dries to touch in one hour. Wait at least four hours before applying each additional coat - longer if rainy or high humidity conditions prevail. Normal conditions include a dry surface, access to fresh air flow, moderate humidity, and temperatures above 55°F. Thick application, high humidity or conditions other than normal will cause Safecoat to dry and cure more slowly.

COLORS: Safecoat Eggshell Zero VOC is available in a pastel base which may be tinted to any pastel shade with a water-based tinting system available at most paint stores.

LIMITATIONS: Unlike conventional paints, Safecoat is made without formaldehyde preservatives. Do not contaminate. Store in airtight containers. Do not use when indoor or surface temperature is below 55°F.

HEALTH PRECAUTIONS: As with all coatings and stains, keep container tightly closed and out of the reach of children. Do not take internally. Keep from freezing. Always use adequate ventilation. If you are chemically sensitive, always test for personal tolerance.

LIMITED LIABILITY: The great variation between environmental factors, possible surfaces and application techniques, and the lack of control we have over such matters, must affect our policies. Safecoat products are guaranteed not to be defective when applied and used in accordance with instructions. However, liability, whether express or implied, is limited to replacement of product or refund of purchase price and cannot include liability for labor costs or consequential damages. Because of the variety of circumstances affecting each job, it is the user's responsibility to determine the suitability and safety of the product for any particular application. This limited warranty may not be modified or extended by manufacturer's representatives, distributors, or dealers of AFM products. **We particularly recommend that users always test in small inconspicuous areas before application to the entire surface.**

AMERICAN FORMULATING AND MANUFACTURING
3251 Third Avenue, San Diego, CA 92103 • Tel: 619-239-0321 Fax: 619-239-0565

MATERIAL SAFETY DATA SHEET

Prepared according to 29 CFR 1910.1200

N/A = Not applicable

Revised 1/15/03

SECTION 1 - PRODUCT IDENTIFICATION

Trade Name: **Safecoat Eggshell Pastel Base Zero VOC**
Product I.D.# & Color: 1416 White
Product Class: Waterborne Polymer Emulsion
Supplier's Name: American Formulating & Manufacturing
Telephone #: (619) 239-0321 Fax # 619-239-0565
Address: 3251 Third Avenue, San Diego, CA 92103
Emergency Phone (MSDS Information): (619) 239-0321 or (562) 693-0872
D.O.T. Emergency Phone Number: (562) 693-0872
US DOT Hazard Shipping Class: Not regulated - aqueous
D.O.T. Labels/Placards Required: No
OSHA Class: 29CFR 1910.1200 Non-hazardous
SARA TITLE III Emergency & Community Right to Know:
Section 311/312 Categorizations (40 CFR 370): Not a hazardous chemical
Section 313 Information (40 CFR 372): This product does not contain a chemical which is listed in Section 313 above de minimis concentrations.

SECTION 2 – INGREDIENTS

Water CAS #: 7732-18-5 Weight Percent: 25 – 30
Titanium Dioxide CAS #: 13463-67-7 Weight Percent: 20 – 25
Pigment dust when dry or sanded ACGIH TLV 10 mg/m3 total dust
Acrylic Copolymer CAS #: Mixture Weight Percent: 15 – 20
Vapor Pressure 17 mm Hg @ 68 F
Limestone CAS #: 1317-65-3 Weight Percent: <4
Pigment dust when dry or sanded ACGIH TLV 10 mg/m3 total dust
OSHA PEL 15mg/m3 total dust
Aluminum Silicate CAS #: 1332-58-7 Weight Percent: <4
Pigment dust when dry or sanded

Suspected Cancer Agents: Federal OSHA: No NTP: NO IARC: No None known.
HMIS Codes: H-1 F-0 R-0 P-B

SECTION 3 - PHYSICAL DATA

Physical Description: Viscous liquid, low odor, mildly alkaline, white (if not tinted). Very mild paint odor.

Boiling Point:	100 C/212 F
Melting Point:	N/A
Vapor Density:	Heavier than air
% Volatile by Volume:	66.79%
LBS/GAL Theoretical:	10.68 +or- .15
Solubility in Water:	Dilutable
Vapor Pressure, mmHg @ 20degC:	N/A
Evaporation Rate:	Slower than ether
% Volatile by Weight	51.17%
Specific Gravity (Water=1):	1.28
VOC Material:	zero
VOC Material less H20:	zero

SECTION 4 - FIRE & EXPLOSION HAZARD DATA

Flash Point: N/A non-combustible
Flammable limits in air, volume % - lower LEL: N/A **Upper UEL**: N/A
Fire Extinguishing Media: Water, carbon dioxide, dry chemical
Personal Protective Equipment: Self-contained breathing apparatus (pressure-demand MSHA/NIOSH approved or equivalent) and full protective gear may be worn if desired, but not necessary for normal use.
Autoignition Temp.: N/A
Special Fire Fighting Procedures: Use water (fog) to cool closed containers. Wear self contained breathing apparatus.
Unusual Fire & Explosion Hazards: Closed containers may explode due to the build up of steam pressure when exposed to extreme heat. Material can splatter above 100°C/212°F. Polymer film can burn.

SECTION 5 - HEALTH HAZARD INFORMATION & FIRST AID

Threshold Limit Value: See Section 2 for hazardous ingredient information

Symptoms of Overexposure

Symptoms and Effects of Short Term Exposure: Acute. Primary route of entry:

Swallowing: May cause gastrointestinal irritation, nausea, vomiting and diarrhea.

Inhalation: Inhalation-spray mists may cause mild respiratory irritation.

Eye Contact: Liquid splashed into the eye may cause transient eye irritation.

Skin Absorption: None known.

Symptoms and Effects of Repeated Overexposure: Chronic - None known.
Medical Conditions Generally Aggravated by Exposure: None known.

Emergency & First Aid Procedures:

Inhalation: Remove from exposure. Provide plenty of fresh air.
Splash (eyes): Flush immediately with large amounts of water for at least 15 minutes, lifting upper and lower eyelids occasionally. Take to a physician for medical treatment.
Splash (skin): Remove with soap and water. Remove contaminated clothing. Supply copious amounts of fresh water to the skin areas to rinse material away.
Ingestion (Swallowing): Consult with physician, hospital emergency room, or poison control center immediately. Only if conscious, give 2 glasses of water to drink.
Notes to Physician: Any treatment that might be required for overexposure should be directed at the control of symptoms and the clinical conditions.

SECTION 6 - REACTIVITY DATA

Stability: Stable, however avoid temperatures above 177°C/350°F, the onset of polymer decomposition.
Incompatibility (materials to avoid): Avoid materials that are water reactive, highly alkaline or highly acidic.
Hazardous Decomposition by-products: CO, CO2 on combustion
Hazardous Polymerization: Will not occur.
Conditions to Avoid: Excess heat may cause containers to rupture. Avoid temperatures below 45°F or freezing conditions.

SECTION 7 - SPILL, DISPOSAL PROCEDURES; ENVIRONMENTAL DATA

Steps to be taken in case material is released or spilled: Confine in small area; contain and remove with inert absorbent (sand, earth, etc.). Place in proper container for proper disposal. CAUTION - Keep out of waterways, drains, sewers by diking. Keep spectators away. Floor may be slippery. Use care to avoid falling.
Waste Disposal Method: Place contaminated material in suitable sealed metal containers for disposal. Do not incinerate closed containers. Use non leaking containers, seal tightly and label properly. Do not pour contaminated paint back into unused paint. Do not throw liquid paint into the trash. Where allowed by local laws (check with local regulatory agencies) allow liquid waste materials to dry out before disposing into trash containers. Take all liquid unused paint that cannot be used to approved recycling centers, paint roundups, or county facilities that are approved to take unused paint at collection sites. Contact state, county, city health services or fire departments to find nearest collection centers. Do not dispose of waste into water streams or storm water sewers. Do not mix with other kinds of waste. Dispose all waste in accordance with local, state and federal regulations.
RCRA Classification: As produced, this product is not a waste. If discarded as is, it is not classified a "Hazardous" waste under RCRA. This product is not ignitable, corrosive, reactive, or toxic; therefore is not defined as hazardous by the EPA.
Environmental Hazards: None known.

SECTION 8 - SPECIAL PROTECTION INFORMATION

Respiratory Protection: If applied by spraying, use an appropriate, properly fitted NIOSH/MSHA approved respirator to remove spray mist. Good room (mechanical) ventilation should be sufficient protection against vapors from product. If further protection is desired or if persons are sensitive to vapors, use a respirator with a NIOSH/MSHA approval number TC-23C-860 or TC-23C-87 or an equivalent. Refer to OSHA 29 CFR 1910.134, "Respiratory Protection".
Ventilation: General (mechanical) room ventilation is expected to be satisfactory.
Protective Gloves: None required under most conditions. If protection is desired, plastic, nitrile or latex rubber will provide adequate protection.
Eye Protection: Safety glasses or goggles with side shields if splashing may occur. Use goggles when spraying, ANSI Z87.1 or approved equivalent.
Other Protection: Eye wash or copious amounts of water as a precautionary measure is suggested. Other equipment not likely to be needed.

SECTION 9 - STORAGE & SPECIAL HANDLING

Storage Temperature: Min. 45degF - Max. 120degF/indoor and outdoor = OK
This product should be stored at room temperature to prolong shelf life. Keep containers in a cool, dry place. Avoid subjecting this product to extreme temperature variations and freezing. Adverse conditions can cause emulsion coagulation.
KEEP CONTAINER CLOSED. KEEP OUT OF REACH OF CHILDREN. DO NOT TAKE INTERNALLY. DO NOT GET IN EYES. IF PRODUCT IS SPRAYED, PREVENT PROLONGED OR REPEATED BREATHING OF SPRAY MIST. USE ADEQUATE VENTILATION WHEN USING THIS PRODUCT. USE GOOD HYGIENE PRACTICES AND WASH AFTER USING PRODUCT.

NOTICE: The data and recommendations presented herein are based upon our research and the research of others, and are believed to be accurate. No guarantee of their accuracy is made, however, and the product discussed is distributed without warranty, expressed or implied, and the person receiving such product shall make his own determination of the suitability thereof for his particular purpose. The use of this information and the conditions and use of this product are controlled by the user, and it is the responsibility and obligation of the user to determine the conditions of safe use of this product. If persons using this product are chemically sensitive, a test for personal tolerance is recommended.

11 00 00 EQUIPMENT

11 30 00 RESIDENTIAL EQUIPMENT

11 31 00 RESIDENTIAL APPLIANCES

11 31 13 Residential Kitchen Appliances

11 31 13.03 Refrigerator

The refrigerator will be based off of a Whirlpool Model GB9SHDXPS and will be modified as follows:a

- Separate fresh food and freezer compartments
- Provide custom refrigeration loop using Embraco compressor

Description of system:

The refrigerator will have an additional refrigeration loop installed to handle only fresh food loads. This will essentially be the entire loop from an Amana Easy Reach™ Plus Model ABB2222FES. Before installation, the duct between the freezer and fresh-food compartment will be closed off to prohibit airflow. Both systems can then be optimized to their operating temperatures.

Refrigeration Circuit Diagram:

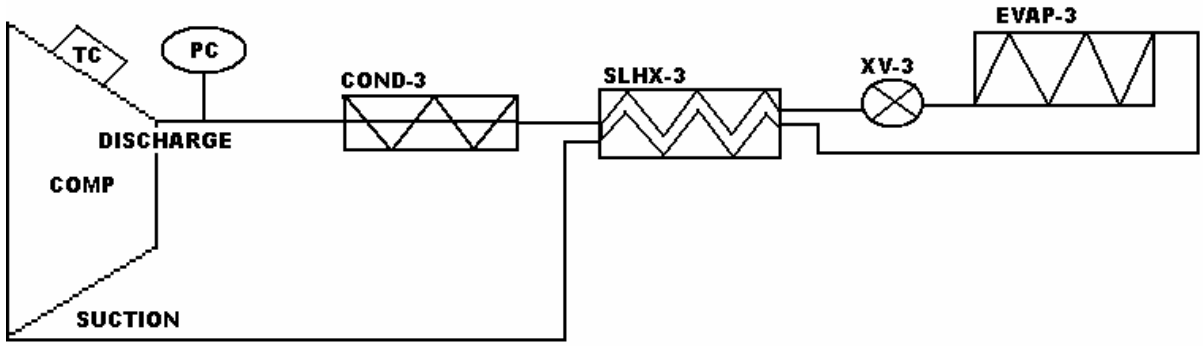

Table of Components:

Item	Description	Physical Characteristics	Safe Working Pressure / Temperature at which SWP applies	Source of Data
Piping to connect components	3/8" ACR Soft Copper Tube	OD = 3/8" ID = 0.311"	787 PSI / 250 °F	http://www.copper.org/resources/pub_list/pdf/copper_tube_handbook.pdf
Piping to connect components	1/4" ACR Copper Tube	OD = 1/4" ID = 0.19"	1125 PSI / 250 °F	http://www.copper.org/resources/pub_list/pdf/copper_tube_handbook.pdf
T, Reducer, Union-Cross and Elbow where open flame is permissible.	Forged Pipe fittings with BCuP-2, 3, 4 or 5 brazing metal.	Melting Ranges within 1300 °F and 1550 °F	Meet or exceed tube strength	http://www.copper.org/resources/pub_list/pdf/copper_tube_handbook.pdf
Joining 1/4" ACR Copper Tube to Wire-and-Tube Condenser	1/4" - 3/16" Brass Swagelok Compression Fittings	ID = 3/16" ID = 1/4"	800 PSI / 200 °F	http://www.swagelok.com/downloads/webcatalogs/EN/MS-01-107.PDF
Compressor	Embraco 134a EMI Compressor	275-710 BTU/hr	N/A	www.embraco.com
PC	Swagelok Relief Valve Product no. SS-4R3A. Set at 400 PSI.	ID = 1/4" ID = 1/4"	50-6000 psi set pressure	http://www.swagelok.com/search/product_detail.aspx?part=SS-4R3A
XV-3	Swagelok Metering Valve Product Number SS-31RS4-G	ID = 1/4" ID = 1/4"	5000 PSI	www.swagelok.com
COND-3	Wire and tube condenser from Amana Refrigerator Model ABB2222FES	OD = 3/16" OD = 3/16"	N/A - Using in exact same application	N/A
EVAP-3	Evaporator from Amana Refrigerator Model ABB2222FES	OD = 1/4" OD = 1/4"	N/A - Using in exact same application	N/A
SLHX-3	Two 7.5 ft. Lengths of 1/4" copper tube soldered together and insulated.	OD = 1/4" ID = 0.19"	1125 PSI / 250 °F	http://www.copper.org/resources/pub_list/pdf/copper_tube_handbook.pdf
TC	Compressor is internally thermall protected	N/A	N/A	www.embraco.com

The installation manual for the refrigerator is given on the following pages.

Installation

Your refrigerator was packed carefully for shipment. Remove and discard shelf packaging and tape. **Do not** remove the serial plate.

Location

- **Do not** install refrigerator near oven, radiator or other heat source. If not possible, shield refrigerator with cabinet material (contact a qualified contractor).
- **Do not** install where temperature falls below 55° F (12° C) or rises above 110° F (43° C). Malfunction may occur at this temperature.
- **Refrigerator is designed for indoor household application only.**

Measuring the Opening

When installing your refrigerator, measure carefully. Allow ½" space at top and ½" space behind the machine compartment cover (located in the rear) for proper air circulation.

Subflooring or floor coverings (i.e. carpet, tile, wood floors, rugs) may make your opening smaller than anticipated.

Some clearance may be gained by using the leveling procedure under *Leveling*.

Important: If refrigerator is to be installed into a recess where the top of the refrigerator is completely covered, use distance from floor to top of hinge cap to verify proper clearance.

Transporting Your Refrigerator

- **NEVER** transport refrigerator on its side. If an upright position is not possible, lay refrigerator on its back. Allow refrigerator to sit upright for approximately 30 minutes *before* plugging it in to assure oil returns to the compressor. Plugging the refrigerator in immediately may cause damage to internal parts.
- Use an appliance dolly when moving refrigerator. **ALWAYS** truck refrigerator from its side or back–**NEVER** from its front.
- Protect outside finish of refrigerator during transport by wrapping cabinet in blankets or inserting padding between the refrigerator and dolly.
- Secure refrigerator to dolly firmly with straps or bungee cords. Thread straps through handles when possible. **Do not** over-tighten. Over-tightening restraints may dent or damage outside finish.

Leveling

To enhance the appearance and maintain performance, the refrigerator should be leveled per instructions below.

⚠ CAUTION

To protect property and refrigerator from damage, observe the following:

- Protect vinyl or other flooring with cardboard, rugs, or other protective material.
- **Do not** use power tools when performing leveling procedure.

Notes:

- Complete any required water supply connection *before* leveling.
- Some models only have adjustment screws **(A)**.

Materials Needed:

- ⅜" hex head driver
- Carpenter's level.

1. Remove toe grille.
   - Grasp firmly and pull outward to unclip.

2. Using hex head driver, turn the front adjustment screws **(A)** on each side to raise or lower the front of the refrigerator (see illustration below).

3. Using the hex head driver, turn each of these adjustment screws **(B)** to raise or lower the rear of the refrigerator.
4. Using a carpenter's level, make sure front of refrigerator is ¼" (6 mm) or ½ bubble higher than back of refrigerator and that the refrigerator is level from side to side.
5. Turn stabilizing legs **(C)** *clockwise* until firmly against floor.
6. Turn adjustment screws **(A)** *counterclockwise* to allow the full weight of the refrigerator to rest on the stabilizing legs.
7. Replace the toe grille.
   - Align the toe grille mounting clips with the lower cabinet slots.
   - Push the toe grille firmly until it snaps into place.

Installation

Door and Drawer Removal

Some installations require door/drawer removal to transport the refrigerator to its final location.

⚠ WARNING

To avoid electrical shock which can cause severe personal injury or death, observe the following:

- Disconnect power to refrigerator *before* removing doors or drawer. Connect power only after replacing doors or drawer.

⚠ CAUTION

To avoid damage to walls and flooring, protect vinyl or other flooring with cardboard, rugs or other protective material.

1. Unplug power cord from power source.
2. Remove toe grille (see page 3).
3. Remove top hinge cover from refrigerator door by removing Phillips screw and retain screw and cover for later use.

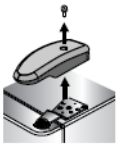

4. Unscrew 5/16" hex head screws from top hinge to remove hinge and retain all screws for later use.

5. Lift refrigerator door from center hinge pin.
6. Remove plastic sleeve, if present. Remove center hinge pin with a 5/16" hex head driver. Retain hinge pin and plastic sleeve for later use.

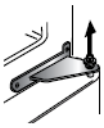

7. Remove Phillips screws to remove center hinge and retain all screws for later use.
8. Remove bottom hinge or stabilizing bracket with 3/8" hex head driver and retain screws for later use. Lift out bottom hinge pin (on freezer door models).

9. See pages 4-5 for drawer removal instructions.

Pullout Freezer Drawer

⚠ DANGER

To prevent accidental child entrapment or suffocation risk, **do not** remove the divider in the top freezer basket.

⚠ WARNING

To avoid electrical shock, which can cause severe personal injury or death, disconnect power to refrigerator *before* removing doors. *After* replacing doors, connect power.

⚠ CAUTION

To avoid possible injury, product, or property damage, you will need two people to perform the following instructions.

To Remove:

1. Pull drawer open to full extension.
2. Pull upper basket out to full extension and lift out to remove.
3. Lift lower basket straight up and out to remove.
4. On each side rail is a basket cradle with two snap attachments. To release each cradle, unlatch the snaps by pushing them inward, away from the side rail system. Lift the cradles off of the rails.

5. Remove Phillips screw from each side of rail system (select models).

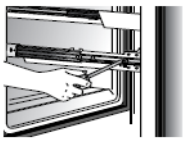

6. Lift top of drawer front to unhook supports from rail system. Lift door front out to remove.

Installation

To Install:

1. Pull both rails out to full extension.

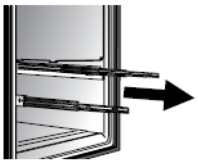

2. While supporting door front, hook supports into tabs located on inside of rail.

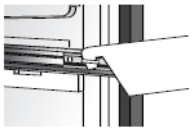

3. Lower door front into final position.

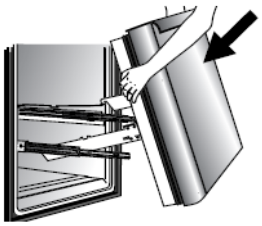

4. Replace and tighten Phillips screws that were removed from each side of rail system (select models).
5. Place the basket cradles back onto the side rails. Align snaps with the slots on the side rails and press each snap towards the rail until it clicks.
6. With rails pulled out to full extension, set the basket straight down into the basket cradles.

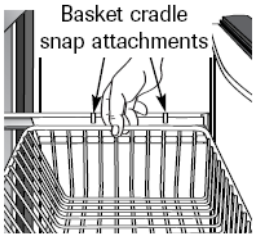

7. Slide upper basket into freezer. Make sure that rear of basket hooks behind rail catch.

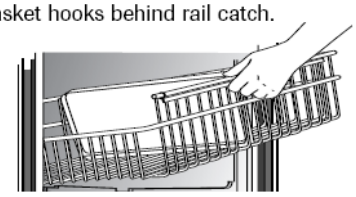

Reinstallation of the Doors

1. Install hinge assemblies:
   - Install top hinge loosely with 5/16" hex head screws.
   - Install center hinge with Phillips screws.
   - **Freezer door models:** Install bottom hinge with 3/8" hex head screws.
2. **Freezer door models:** Insert bottom hinge pin.
   - Locate bottom hinge hole closest to outside edge of cabinet, and insert bottom hinge pin. Replace any door shims, if present.

3. **Freezer door models:** Place hinge side of freezer door on bottom hinge pin and hold freezer door upright while installing center hinge pin with 5/16" hex head driver.
   - Replace plastic sleeve.
   - Replace any applicable door shims.
   - Make sure the hinge pin is installed tightly.

4. Place hinge side of refrigerator door on center hinge pin.
5. While holding refrigerator door upright, tighten down top hinge with 5/16" hex head driver and replace hinge cover.

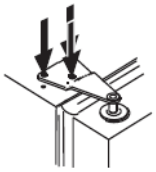

Door Reversal

In some installations, reversing the door swing allows for more convenient access to stored items. Both doors can be reversed on freezer *door* models and the fresh food door is reversible on freezer *drawer* models.

1. Remove door(s) (see page 4).
2. Transfer cabinet plugs and cabinet screws to opposite side of cabinet.
   - Remove cabinet plugs with flat blade of screwdriver tip wrapped in masking tape.
   - Remove center mullion screws with 5/16" hex head screwdriver.
   - **Freezer door models:** Remove bottom mullion screws with 3/8" hex head driver.

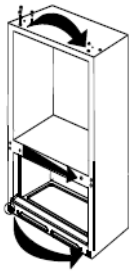

Installation

⚠ CAUTION

To avoid possible injury and damage to property:

- Place doors on a nonabrasive surface protected by towels or rugs while working directly on doors.

3. Transfer door stops from bottom edge of fresh food door and freezer door, if applicable, to opposite side of door edge.
   - Use a Phillips screwdriver for removal and installation.

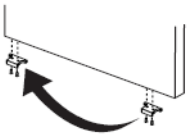

4. Install handles (see below and page 7).
5. Reinstall the door(s).

Handles

Note: If not installed, the handle is located in the interior of the fresh food section or attached to the back of your refrigerator.

Remove and discard handle packaging and tape.

Handle design varies from refrigerator to refrigerator. Please reference the appropriate instructions for your model below.

Fresh Food Handles

Standard Front Mount Handle

Materials Needed:

- Phillips screwdriver
- 5/16" hex head driver

To Install:

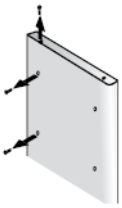

1. Remove ¼" hex head screws from door face with hex head driver, and Phillips screw from top of door.
   - If reversing door, remove door plugs from opposite side of door and insert in screw holes.

2. Align handle holes with screw holes on door face and secure with two door face screws from step 1.

3. Locate handle trim in literature pack and install over top and bottom of handle, as illustrated.
   - Secure top handle trim with remaining screw removed in step 1.
   - Snap bottom trim over bottom portion of handle.

To Remove:

1. Remove top handle trim by removing top handle screw.
   - Retain trim and screw for later replacement.
2. Pry bottom handle trim from handle with screwdriver flat blade wrapped in masking tape.
   - Retain trim for later replacement.

3. Remove two hex head screws.
   - Retain screws for later replacement.

Side Mount Handle

Materials Needed:

- Phillips screwdriver

To Install:

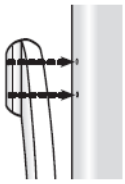

1. Remove screws from the side of the door.
2. Align the side mount handle with the predrilled holes in the door panel.
3. Insert the screws in the sequence as shown.

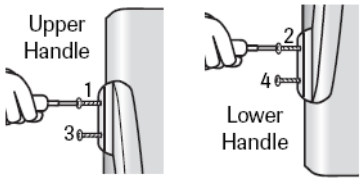

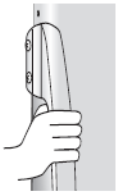

4. Ensure the door handle is snug to the door panel.

To Remove:

Reverse installation procedure.

Installation

Freezer Handles

Partial-Width Handle

Materials Needed:

- Phillips screwdriver

To Install:

1. Install handle by fastening with screws removed from edge of door.
   - If reversing freezer door, remove door plugs from top edge of door and insert into screw holes.

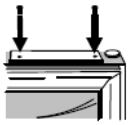

To Remove:

1. Remove handle screws with Phillips screwdriver and retain screws for later use.

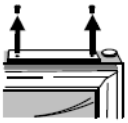

Front Mount Plastic Freezer Handle

Notes:

- There is a slight curve to this style of freezer handle.
- For proper installation, be sure handle is oriented as shown.

To Install:

1. Align door handle clips to the studs attached to the freezer door.
2. Ensure the large hole in the mounting clip is positioned to the *right* on both ends of the handle.

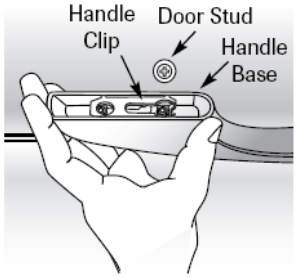

3. Rotate the handle so that the handle is flat against the door.
4. Grasp the handle firmly and slide handle to the *right*.

To Remove:

1. With both hands, firmly grasp the handle toward the right side.
2. Slide toward the *left*, lift and remove from the surface.

Installation

Connecting the Water Supply

⚠ WARNING

To reduce the risk of injury or death, follow basic precautions, including the following:

- Read all instructions *before* installing ice maker.
- **Do not** attempt installation if instructions are not understood or if they are beyond personal skill level.
- Observe all local codes and ordinances.
- **Do not** service ice maker unless specifically recommended in Use & Care Guide or published user-repair instructions.
- Disconnect power to refrigerator *before* installing ice maker.
- Water damage due to an improper water connection may cause mold/mildew growth. Clean up spills or leakage immediately!

⚠ CAUTION

To avoid property damage or possible injury, follow basic precautions, including the following:

- Consult a plumber to connect ¼" **O.D. copper tubing** to household plumbing to assure compliance with local codes and ordinances.
- Confirm water pressure to water valve is between 35 and 100 pounds per square inch, 20 pounds per square inch without filter.
- **Do not** use a self-piercing or 3/16" saddle valve. Both reduce water flow and can become clogged over time, and may cause leaks if repair is attempted.
- Tighten nuts by hand to prevent cross threading. Finish tightening nuts with pliers and wrenches. **Do not** over-tighten.
- Wait two to three hours *before* placing refrigerator into final position to check and correct any water leaks. Recheck for leaks after 24 hours.
- Verify the copper tubing under the sleeve is smooth and free from defects. **Do not** reuse an old sleeve.

Materials Needed:

- ¼" outer diameter flexible copper tubing
- Shut-off valve (requires a ¼" hole to be drilled into water supply line *before* valve attachment)
- Adjustable wrench (2)
- ¼" hex nut driver

Notes:

- Use copper tubing only for installation. Plastic is less durable and can cause damage.
- Add 8' to tubing length needed to reach water supply for creation of service loop.

1. Create service loop with copper tubing (minimum 2' diameter). Avoid kinks in the copper tubing when bending the service loop. **Do not** use plastic tubing.

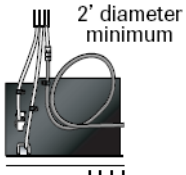

2. Remove plastic cap from water valve inlet port.

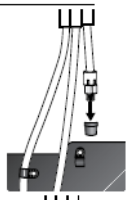

3. Place brass nut **(A)** and sleeve **(B)** on copper tube end as illustrated. **Reminder: Do not** use an old sleeve. The nut and sleeve are provided in the Use and Care packet.

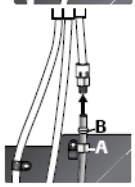

4. Place end of copper tubing into water valve inlet port. Shape tubing slightly. **Do not** kink – so that tubing feeds straight into inlet port.

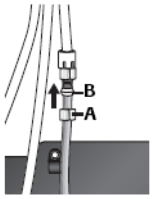

Installation

5. Slide brass nut over sleeve and screw nut into inlet port.

   Place adjustable wrench on nut **(1)** attached to plastic waterline and maintain position.

   Using second adjustable wrench turn the lower nut **(2)** *counterclockwise* and fully tighten while holding the upper nut in place.

   Important: Do not over-tighten. Crossthreading may occur.

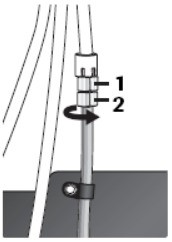

6. Pull on tubing to confirm connection is secure. Connect tubing to frame with water tubing clamp **(C)** and turn on water supply. Check for leaks and correct if necessary. Continue to observe the water supply connection for two to three hours prior to moving the refrigerator to its permanent location.

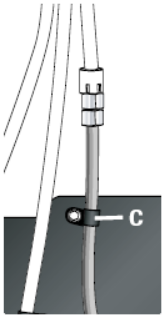

7. Monitor water connection for 24 hours. Correct leaks, if necessary.

Alternate connection (select models)

Materials Needed:

- ¼" outer diameter flexible copper tubing
- Shut-off valve (requires a ¼" hole to be drilled into water supply line *before* valve attachment)
- Adjustable wrench
- ¼" hex nut driver

Notes:

- Use copper tubing only for installation. Plastic is less durable and can cause damage.
- Add 8' to tubing length needed to reach water supply for creation of service loop.

1. Create service loop with copper tubing (minimum 2' diameter). Avoid kinks in the copper tubing when bending the service loop. **Do not** use plastic tubing.

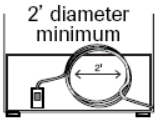

2. Remove plastic cap from water valve inlet port.

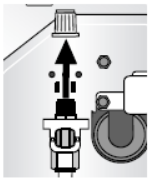

3. Place brass nut **(A)** and sleeve **(B)** on copper tube end as illustrated. **Reminder: Do not** use old sleeve. The nut and the sleeve are provided in the use and care packet.

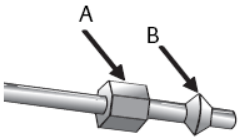

4. Place end of copper tubing into water valve inlet port. Shape tubing slightly. **Do not** kink – so that tubing feeds straight into inlet port.

5. Slide brass nut over sleeve and screw nut into inlet port. Tighten nut with wrench.

   Important: Do not over-tighten. Crossthreading may occur.

6. Pull on tubing to confirm connection is secure. Connect tubing to frame with water tubing clamp **(C)** and turn on water supply. Check for leaks and correct if necessary. Continue to observe the water supply connection for two to three hours prior to moving the refrigerator to its permanent location.

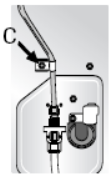

7. Monitor water connection for 24 hours. Correct leaks, if necessary.

9

BRIEF DESCRIPTION OF MODIFICATIONS TO REFRIGERATOR INSTALLATION INSTRUCTIONS:

The refrigerator will be modified to have pull-out drawers that could cause the entire appliance, if unsecured, to tip forward. It will therefore be necessary to lag-bolt the provided brackets to studs.

11 31 13.04 Water Heater

Overview:

- Do not connect electric resistance element
- Supply circulation pump and CO_2 air-source heat pump to heat water
- Use Thermostat intended to control electric resistance element to switch on heat pump

Description of Heat pump:

The water heater heat pump uses CO_2 as its refrigerant. All components are specified to withstand the higher pressures encountered in a CO_2 system. High side system pressure will not exceed 1500 PSI by virtue of both a relief valve set at 1500 PSI and a temperature cutoff at 200 °F.

Airflow over Evaporator will be supplied by the fan and housing assembly from a Whirlpool ACD052PS Window Unit Air Conditioner.

Circulation pump, fan and compressor will all be controller by the bimetallic thermostat supplied with the Richmond Electric Water heater.

Refrigeration Circuit of CO_2 Water Heater:

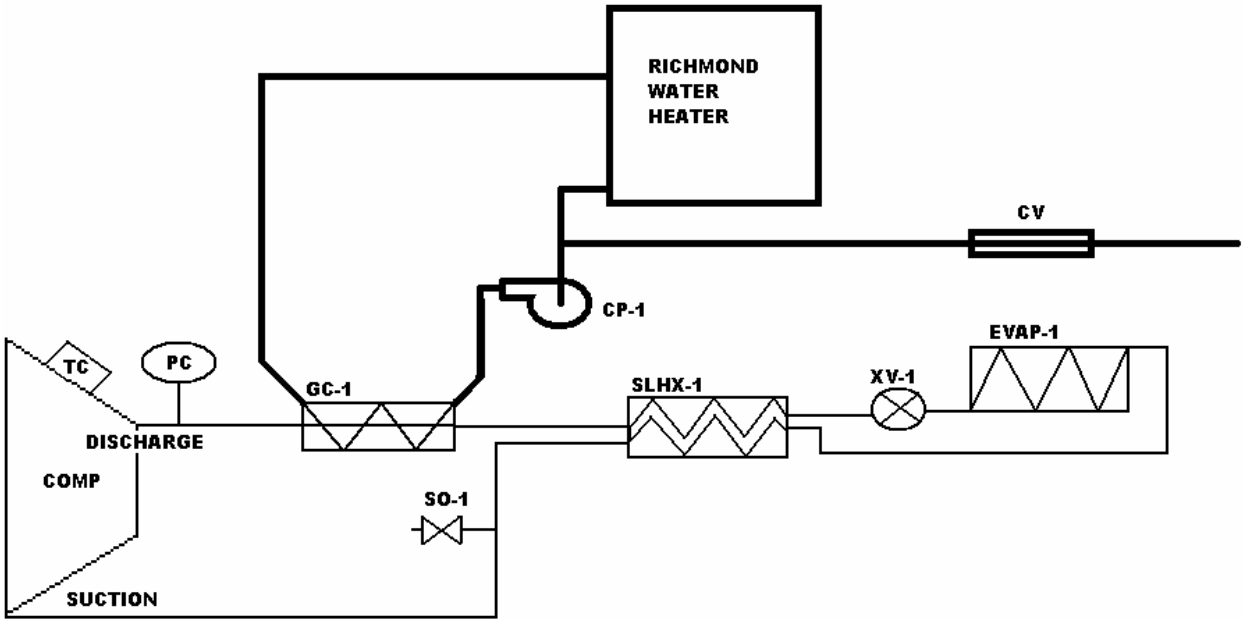

Table of Components:

Item	Description	Physical Characteristics	Safe Working Pressure / Temperature at which SWP applies	Source of Data
Piping to connect components and TXV pressure line	1/4" Copper Tube	OD = 1/4" ID = 0.12"	3220 PSI / 70 °F 0.8 Temperature Derate factor for 200 °F => 2576 PSI	www.mcmaster.com Product Number 8955K231
T, Reducer, Union-Cross and Elbow where open flame is permissible.	Forged Pipe fittings with BCuP-2, 3, 4 or 5 brazing copper to copper and 54% silver for copper to steel.	Melting Ranges within 1300 °F and 1550 °F	Meet or exceed tube strength	http://www.copper.org/resources/pub_list/pdf/copper_tube_handbook.pdf
T, Reducer, Union-Cross and Elbow where open flame is permissible.	Swagelok compression fittings (3/8"-1/4" reducer union, 3/8"-3/8" union, elbow and cross union)	ID = 3/8" ID = 1/4"	2800 PSI / 200 °F	http://www.swagelok.com/downloads/webcatalogs/EN/MS-01-107.PDF
GC-1	Modine CO_2 Water Heating Heat Exchanger	*	2459 / 250 °F	*
Compressor	Danfoss CO_2 compressor. Model Number TN1416 MBP	2600 kW capcity	1740 PSI	See Below
PC	Swagelok Relief Valve Product no. SS-4R3A	ID = 1/4" ID = 1/4"	50-6000 psi set pressure. Set to 1500 PSI	http://www.swagelok.com/search/product_detail.aspx?part=SS-4R3A
TC	Temperature cutoff switch. Integral to compressor.	N/A	N/A	N/A
SLHX-1	Two 17 ft. Lengths of 1/4" copper tube soldered together and insulated.	OD = 1/4" ID = 0.12"	3220 PSI / 70 °F 0.8 Temperature Derate factor for 200 °F => 2576 PSI	www.mcmaster.com Product Number 8955K231
SO-1	Swagelok Shutoff Valve Product Number SS-43S4	ID = 1/4" ID = 1/4"	1500 PSI	www.swagelok.com
XV-1	Swagelok Metering Valve Product Number SS-31RS4-G	ID = 1/4" ID = 1/4"	5000 PSI	www.swagelok.com
EVAP-1	Modine CO_2 Evaporator	Special Fittings	**	**
Richmond Water Heater	19.9 Gallon Richmond Electric Water Heater	Insulated Steel Tank with Electric Element and Bimetalic thermostat	N/A	N/A
CP-1	Circulation Pump March Mfg Inc. AC-3C-MD	Out - 1/2" Male NPT In - 3/4" Female NPT	N/A	http://www.marchpump.com/
CV-1	Check Valve	1" FPT 1" FPT	N/A	N/A

NOTE: Modine has allowed our team to use their prototype water-heating heat exchanger. The 1/8 tube that contains the refrigerant has a rated pressure of 2459 PSI at 250°F, higher than the temperature cutoff switch will allow. Additionally, the water portion is separated by two walls of copper so that any burst from the refrigerant pipe will result in dissipation of the refrigerant, not mixture with potable water.

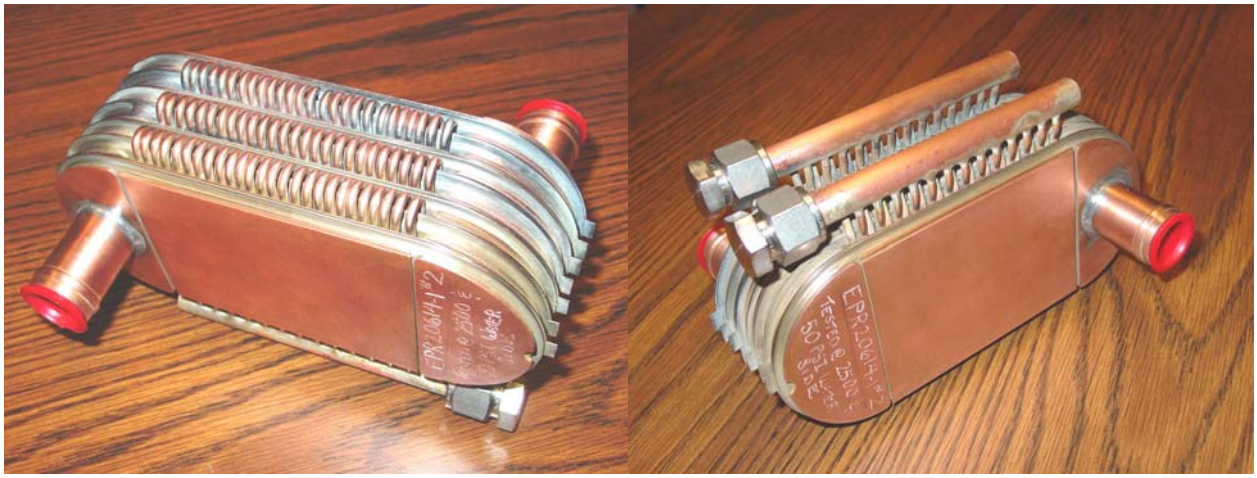

NOTE: Modine developed this air-to-refrigerant heat exchanger specifically for CO_2 applications and it is rated to CO_2 pressures. It is built largely with micro-channel aluminum, which can withstand pressures much larger than the set point of the relief valve. It will also, like all other components, be subject to a pressure test before use.

11 31 13.05 Dishwasher

The dishwasher will be based off of a Fisher&Paykel Dishdrawer Model DD603B and will be modified as follows:

- Do not run hot water line
- Remove electric resistance heater
- Remove lower drawer and replace with CO_2 air-source heat pump to heat water
- The original data sheets are included at the end of this section for reference

Description of Heat Pump:

The dishwasher will contain a single-pass CO_2 heat pump water heater. When the dishwasher calls for hot water, the heat pump and fan will be switched on to begin the heating process.

Airflow over Evaporator will be supplied by the fan and housing assembly a Whirlpool ACD052PS Window Unit Air Conditioner.

Refrigeration Circuit of CO_2 Water Heater:

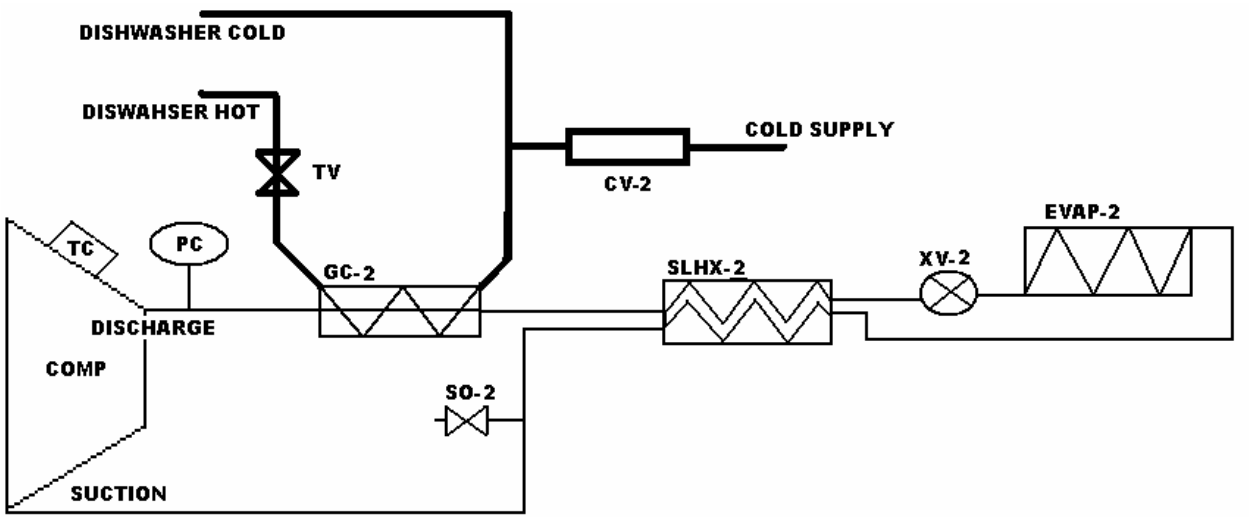

Table of Components:

Item	Description	Physical Characteristics	Safe Working Pressure / Temperature at which SWP applies	Source of Data
Piping to connect components and TXV pressure line	1/4" Copper Tube	OD = 1/4" ID = 0.12"	3220 PSI / 70 °F 0.8 Temperature Derate factor for 200 °F => 2576 PSI	www.mcmaster.com Product Number 8955K231
T, Reducer, Union-Cross and Elbow where open flame is permissible.	Forged Pipe fittings with BCuP-2, 3, 4 or 5 brazing copper to copper and 54% silver for copper to steel.	Melting Ranges within 1300 °F and 1550 °F	Meet or exceed tube strength	http://www.copper.org/resources/pub_list/pdf/copper_tube_handbook.pdf
T, Reducer, Union-Cross and Elbow where open flame is permissible.	Swagelok compression fittings (3/8"-1/4" reducer union, 3/8"-3/8" union, elbow and cross union)	ID = 3/8" ID = 1/4"	2800 PSI / 200 °F	http://www.swagelok.com/downloads/webcatalogs/EN/MS-01-107.PDF
GC-2	Custom Tube-in-Tube Heat Exchanger	***	2576 PSI / 200 °F	www.mcmaster.com Product Number 8955K231
Compressor	Danfoss CO_2 compressor. Model Number TN1416 MBP	2600 kW capcity	1740 PSI	See Below
PC	Swagelok Relief Valve Product no. SS-4R3A	ID = 1/4" ID = 1/4"	50-6000 psi set pressure. Set to 1500 PSI	http://www.swagelok.com/search/product_detail.aspx?part=SS-4R3A
TC	Temperature cutoff switch. Integral to compressor.	N/A	N/A	N/A
SLHX-2	Two 17 ft. Lengths of 1/4" copper tube soldered together and insulated.	OD = 1/4" ID = 0.12"	3220 PSI / 70 °F 0.8 Temperature Derate factor for 200 °F => 2576 PSI	www.mcmaster.com Product Number 8955K231
SO-2	Swagelok Shutoff Valve Product Number SS-43S4	ID = 1/4" ID = 1/4"	1500 PSI	www.swagelok.com
XV-2	Swagelok Metering Valve Product Number SS-31RS4-G	ID = 1/4" ID = 1/4"	5000 PSI	www.swagelok.com
EVAP-2	Modine CO_2 Evaporator	Special Fittings	**	**
CV-2	Check Valve	1" FPT 1" FPT	N/A	N/A

NOTE: Refrigerant-to-water heat exchangers for the dishwasher and clothes washer will be constructed by using the Swagelok fittings indicated to assemble a tube-in-tube setup that consists of a flexible PVC tube surrounding the ¼" pressure rated copper pipe. The PVC tube will be braided-reinforced and be temperature rated up to 200°F (McMaster part number 55425K33). The portion of ¼" copper surrounded by the flexible tube will contain no fittings of any sort to minimize risk of water contamination. If Modine is able to supply our team with more of its specialized CO_2 refrigerant-to-water heat exchangers, these will be substituted. See illustration:

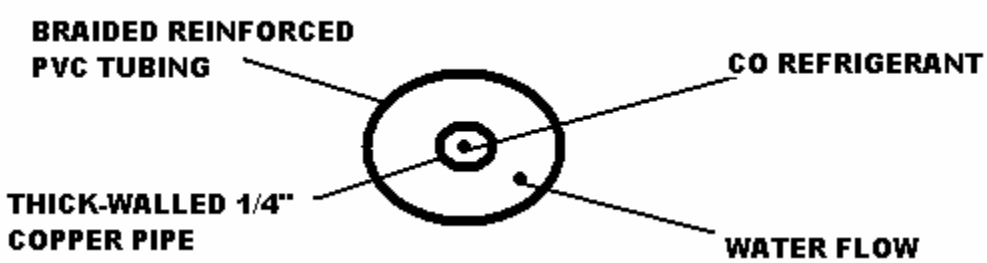

The installation manual for the dishwasher is given on the following pages:

Fisher&Paykel

US CA

part number 526607 0
08/2006
(page 1 of 12)

DishDrawer®
INSTALLATION INSTRUCTIONS

(NOTE: FOR INTEGRATED PANEL PREPARATION INSTRUCTIONS REFER TO SUPPLIED SHEET)

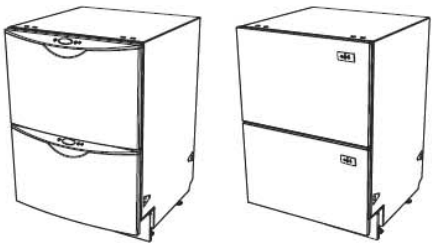

DOUBLE DD603 MODELS

DD603 PREFINISHED (shown left)
DD603 FLAT DOOR (not shown)
DD603I INTEGRATED (shown right)

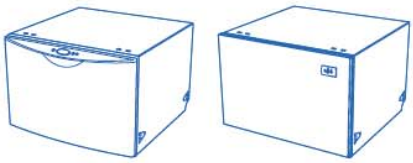

SINGLE DS603 MODELS

DS603 PREFINISHED (shown left)
DS603 FLAT DOOR (not shown)
DS603I INTEGRATED (shown right)

NOTE TO THE INSTALLER

1. Read these instructions completely and carefully.
2. Installation of this DishDrawer® requires basic mechanical and electrical skills.
3. Be sure to leave these Instructions with the Customer.
4. At the completion of the DishDrawer® installation, the Installer must perform Final Check List as per Section 12 of these Installation Instructions.
5. Remove all packaging materials supplied with the DishDrawer®.
6. This dishwasher is manufactured for indoor use only.

NOTE TO THE CUSTOMER

Keep these Installation Instructions with your User Guide for future reference. The DishDrawer® must be securely anchored before it is operated.

⚠WARNING!

Before installing the DishDrawer® , remove the house fuse or open the circuit breaker. Ensure all water connections are turned OFF. It is the responsibility of the plumber and electrician to ensure that each installation complies with all Codes and Regulations.

Important!

These instructions must be followed precisely to ensure correct venting and operation of the DishDrawer® . In the event of a fault related to the incorrect installation, the installer will be liable for any repairs.

Important!

The DishDrawer® MUST be installed to allow for future removal from the enclosure if service is required.

Important!

Improper installation is not covered under the Warranty.

Important!

If the DishDrawer® is to be relocated from one installation to another it must be kept upright to avoid damage from water spillage.

DOUBLE MODELS

DishDrawer®

SERVICES SPECIFICATIONS

WATER CONNECTION
Recommended HOT
(Maximum 140°F/60°C).
Supplied hose to suit 3/8" (9mm)
male compression fitting.

WATER SOFTENER MODELS
Refer to your DishDrawer® User Guide for
how to set up your water softener.

WATER PRESSURE

	Maximum	Minimum
Water Softener Models	145 p.s.i. (1000kPa)	14.5 p.s.i. (100kPa)
Other Models	145 p.s.i. (1000kPa)	4.3 p.s.i. (30kPa)

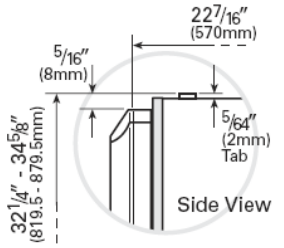

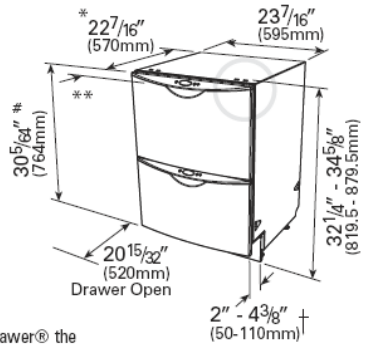

Prefinished model shown
* For an Integrated DishDrawer® the product depth is specified with an 11/16" (18mm) Integrated Panel thickness.
** Depth of product excludes Curvature (1 3/16" (30mm) Prefinished only,) or Handle.

DRAIN CONNECTION
Drain Hose Joiner to suit Ø3/4" ± 5/64", Ø5/8" ± 5/64" and Ø1" ± 5/64" waste tees.

ELECTRICAL CONNECTION
110-120 VAC power outlet, 9 Amps Minimum.

LENGTH OF SERVICES (FROM PRODUCT EXIT POINT)
Drain hose - 88 9/16" (2250mm)
Inlet hose - 68 7/8" (1750mm)
Power supply cord - 44" (1125mm)
NOTE: Services approximately exit product 7 7/16" (189mm) from left; 21 5/8" (550mm) from front; 31 1/4" (793mm) from top.

† TOE KICK DEPTH
Prefinished & Flat Door 2"-4 3/8" (50-110mm);
Integrated 5" (127mm) less the Toe Kick Panel thickness. Minimum Panel thickness using the supplied screws is 3/8" (9mm).

 # DOOR FRONT HEIGHT
Prefinished & Flat Door 30 5/64" (764mm);
Integrated 28 1/4" (717.5mm) minimum.

THE CAVITY

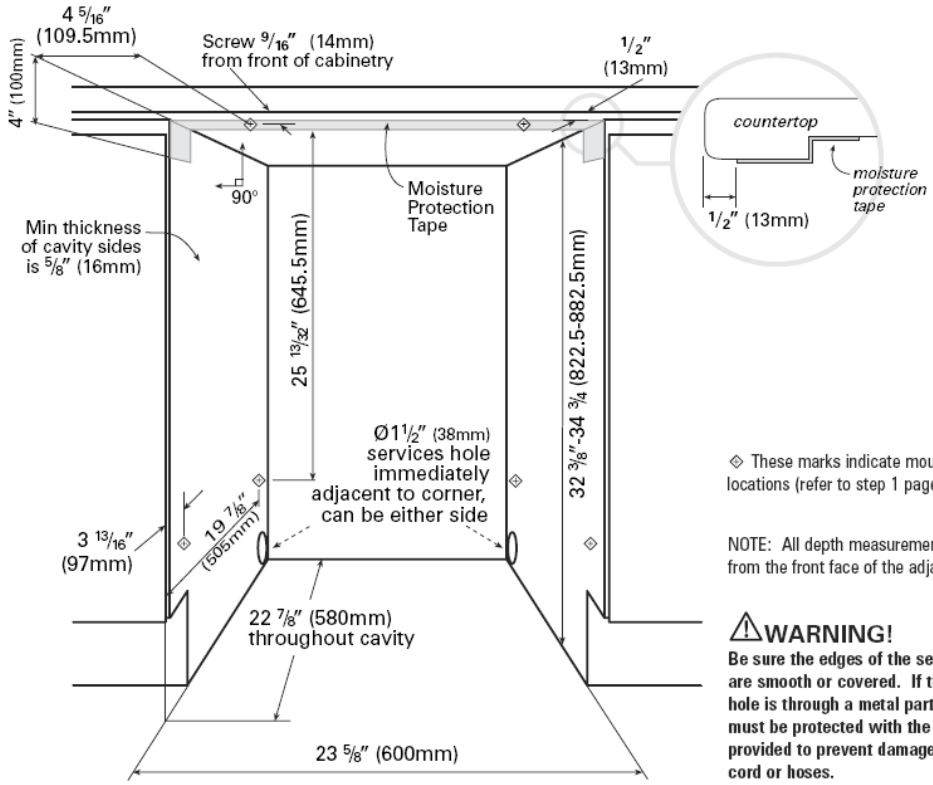

◇ These marks indicate mounting tab screw locations (refer to step 1 page 7)

NOTE: All depth measurements are taken from the front face of the adjacent cabinetry.

⚠WARNING!
Be sure the edges of the services hole are smooth or covered. If the services hole is through a metal partition the hole must be protected with the Edge Protector provided to prevent damage to the power cord or hoses.

3

DOUBLE MODELS

DishDrawer®

SERVICES SPECIFICATIONS

WATER CONNECTION
Recommended HOT
(Maximum 140°F/60°C).
Supplied hose to suit 3/8" (9mm)
male compression fitting.

WATER SOFTENER MODELS
Refer to your DishDrawer® User Guide for
how to set up your water softener.

WATER PRESSURE

	Maximum	Minimum
Water Softener Models	145 p.s.i. (1000kPa)	14.5 p.s.i. (100kPa)
Other Models	145 p.s.i. (1000kPa)	4.3 p.s.i. (30kPa)

DRAIN CONNECTION
Drain Hose Joiner to suit Ø3/4" ± 5/64", Ø5/8" ± 5/64" and
Ø1" ± 5/64" waste tees.

ELECTRICAL CONNECTION
110-120 VAC power outlet, 9 Amps Minimum.

LENGTH OF SERVICES (FROM PRODUCT EXIT POINT)
Drain hose - 88 9/16" (2250mm)
Inlet hose - 68 7/8" (1750mm)
Power supply cord - 44" (1125mm)
NOTE: Services approximately exit product 7 7/16" (189mm) from left;
21 5/8" (550mm) from front; 31 1/4" (793mm) from top.

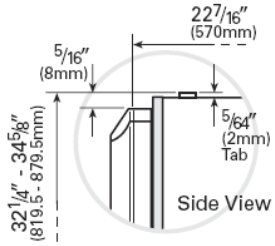

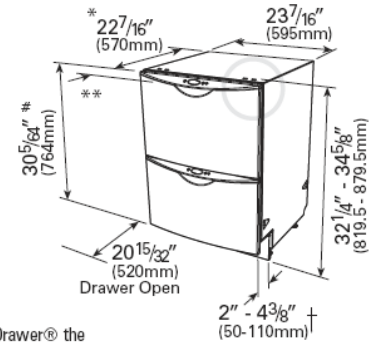

Prefinished model shown
* For an Integrated DishDrawer® the product depth is specified with an 11/16" (18mm) Integrated Panel thickness.
** Depth of product excludes Curvature (1 3/16" (30mm) Prefinished only,) or Handle.

† TOE KICK DEPTH
Prefinished & Flat Door 2"-4 3/8" (50-110mm);
Integrated 5" (127mm) less the Toe Kick Panel thickness. Minimum Panel thickness using the supplied screws is 3/8" (9mm).

 # DOOR FRONT HEIGHT
Prefinished & Flat Door 30 5/64" (764mm);
Integrated 28 1/4" (717.5mm) minimum.

THE CAVITY

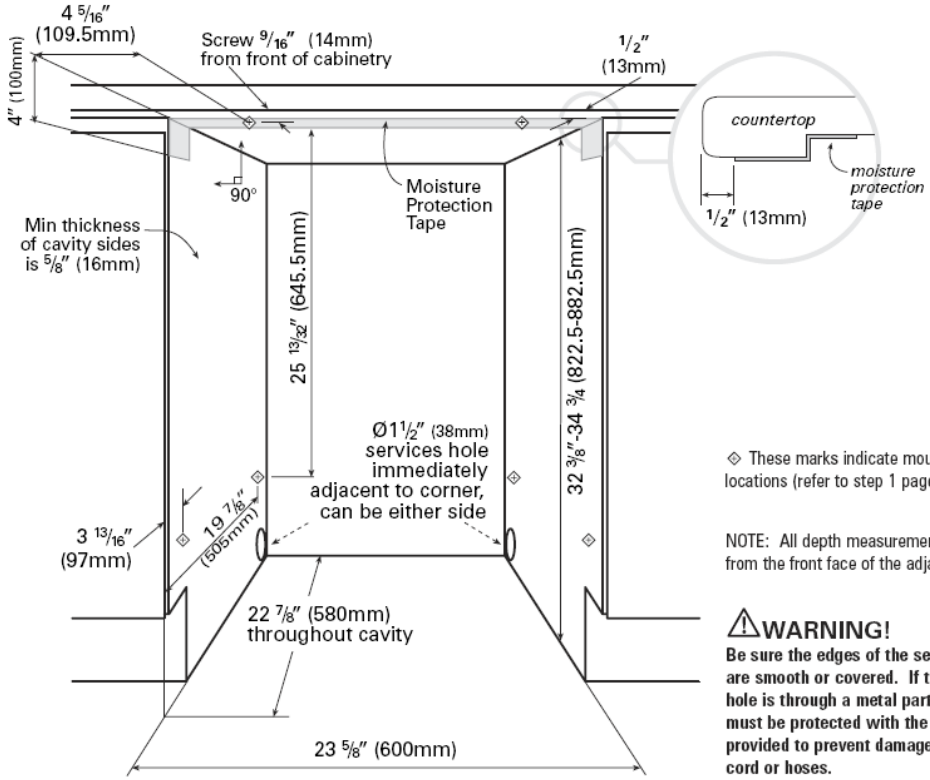

◇ These marks indicate mounting tab screw locations (refer to step 1 page 7)

NOTE: All depth measurements are taken from the front face of the adjacent cabinetry.

⚠WARNING!
Be sure the edges of the services hole are smooth or covered. If the services hole is through a metal partition the hole must be protected with the Edge Protector provided to prevent damage to the power cord or hoses.

3

PLUMBING OPTIONS

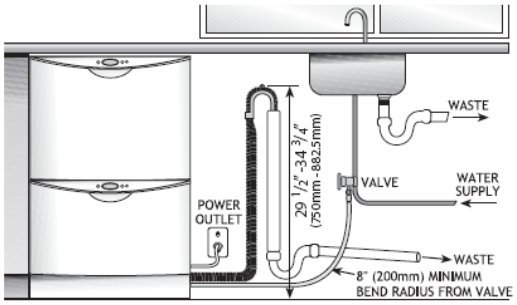

OPTION 1
DishDrawer® and Standpipe Ø1½" (38mm) with Air Gap.

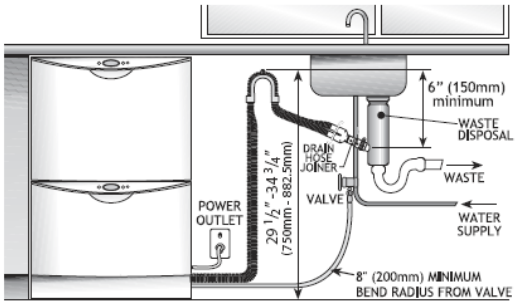

OPTION 2
DishDrawer® with Waste Disposal.

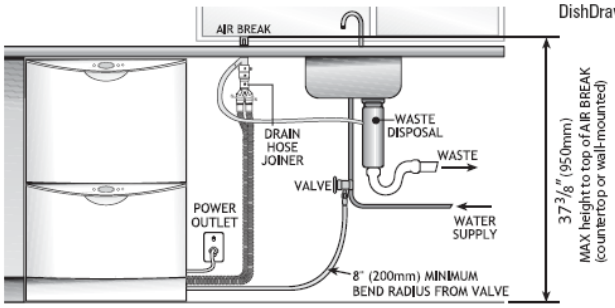

OPTION 3
DishDrawer® using Air Break with Drain Hose Joiner.

NOTE: Prefinished Model is shown. There is no variation in plumbing between models. Option 1 is the preferred option. Drains will need to be separated to satisfy Kosher requirements. We suggest you confirm acceptability with your local Rabbi in respect to Kosher installations.

INSTALLATION INSTRUCTIONS

DishDrawer®

PLEASE NOTE: Your model of DishDrawer® may differ from the model shown in the installation diagrams. Installation is similar for all models for either Single or Double models. Information referring to Single models only is highlighted in blue. Installation diagrams have been simplified to enable clearer instruction. FOR INTEGRATED PRODUCTS FOLLOW THE INTEGRATED PANEL PREPARATION INSTRUCTIONS P/N 526608, BEFORE MOVING THE PRODUCT INTO THE CAVITY.

READ THESE INSTRUCTIONS COMPLETELY AND CAREFULLY.

STEP 1: *MOVING THE PRODUCT INTO THE CAVITY*

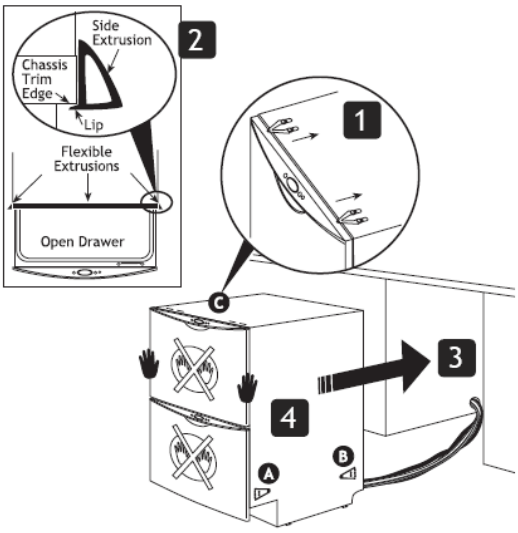

⚠WARNING!
Be careful of sharp edges.

Important!
DO NOT push middle of drawer(s).

MOUNTING TAB OPTIONS

The mounting tabs are in pairs, one on each side of the product. They are used to secure the product to the cavity sides. Installation requires two sets of tab pairs be used. DOUBLE MODELS ONLY - A and B tab pairs OR B and C tab pairs may be used. All tabs would be optimum.

1. If the top installation tabs C are to be used, fit to the chassis by inserting into the top slots as shown. Ensure the tabs are fully locked in place.

2. **Optional Flexible Extrusion**
If the cavity is 24" x 34½" (610mm x 876mm) flexible extrusions can be attached along the top and sides of the product. Open the drawer(s) to expose the chassis trim. Remove extrusion backing and adhere to the side and top of DishDrawer®. Refer to the drawing for correct placement.

Be sure that extrusions do not prevent the drawer from closing completely.

3. Check cavity for any obstructions that may interfere with sliding the product back. DOUBLE MODELS ONLY - loosen the feet first.

4. Push product into cavity to suit adjacent cabinetry. Do not push middle of drawer(s). Be sure inlet, drain hose(s) and power supply cord are not restricted or damaged by carefully pulling all excess length through the services hole, while the product is being pushed back into the cavity.

FOR SINGLE MODELS, check that the base of the product is not bowed. Do not rest single models on your knee when moving them into the cavity.

STEP 2: *REMOVING THE TUB*

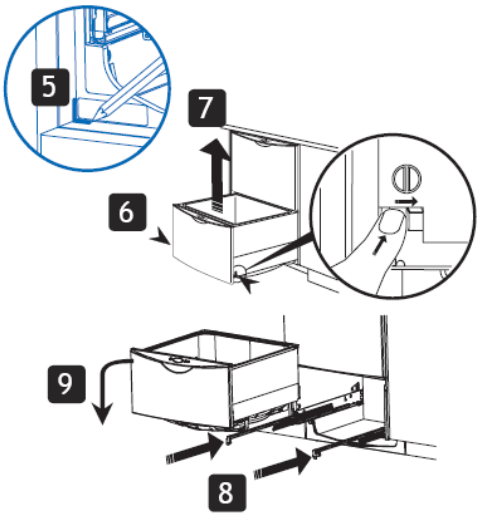

Important! (SINGLE MODELS ONLY).
The product may move. Mark chassis position on cavity.

5. SINGLE MODELS ONLY. Gently open the drawer and mark the chassis position on the cavity, before removing the tub.

6. Open the drawer (bottom drawer in DOUBLE MODELS). Release the tub by depressing the right hand tub clip and pushing it back 13/16" (30mm). Repeat on the left hand side.

7. Lift the tub up off the drawer runners.

8. Slide both runners back into the product.

9. Place the tub onto the floor.
For SINGLE MODELS, depending on the height of the cavity, the tub will need to be supported, eg on a chair.

STEP 3: ADJUSTING THE FEET (DOUBLE MODELS ONLY)

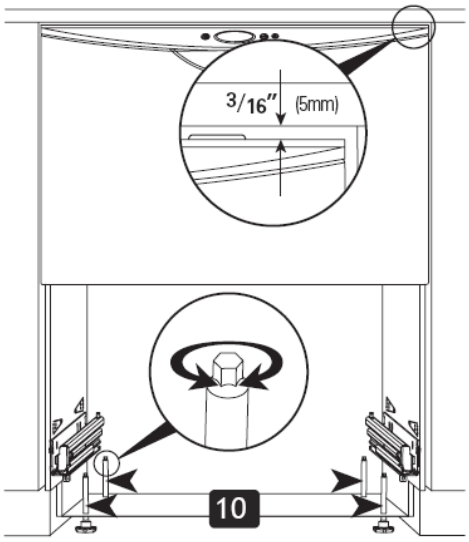

10 ***DOUBLE MODELS ONLY***
Adjust the height of the product to suit the cabinetry, by turning the feet from inside the product using a wrench or M5 socket.

TIP - gently take the load off each foot using the slide and then turn by hand.

NOTE: For integrated products, the upper panel may be aligned with the top of the adjacent cabinetry, provided a minimum 3/16" (5mm) clearance from the counter is maintained.

Important!
The product must be levelled to within 3/32" (2.5mm) from front to back, and side to side.

Important!
The product should NOT support any part of the kitchen cabinetry.

TIP - Place a spirit level on the drawer runners to level the product.

STEP 4: SECURING THE PRODUCT

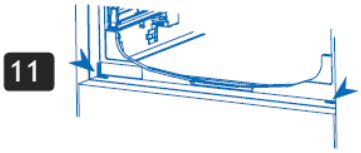

11 ***SINGLE MODELS ONLY***
Check the position of the chassis is still where marked on the cavity, before securing the product.

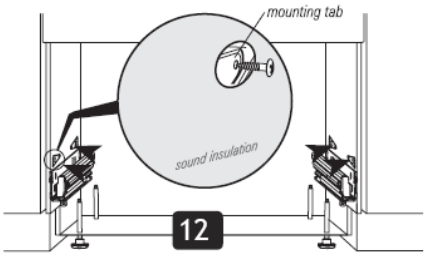

12 There are four 5/8" (16mm) round holes, two on the left and two on the right hand side in the sound insulation. These provide access to the mounting tabs.

To secure the product to the cabinetry use a 5/8" (16mm) Phillips screw in each mounting tab.

Make sure the sound insulation is positioned correctly before continuing installation.

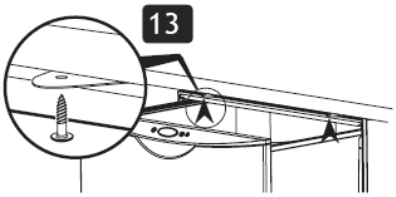

13 ***DOUBLE MODELS ONLY***
Screw the two top tabs to the underside of bench. Use the supplied Phillips 5/8" (16mm) screws. Tabs can accommodate a maximum of 3/4" (19mm) vertical gap.

STEP 5: ELECTRICAL CONNECTION

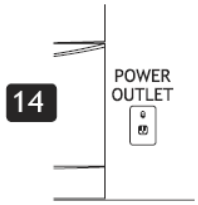

This view shows the bottom left-hand rear corner with the cover removed

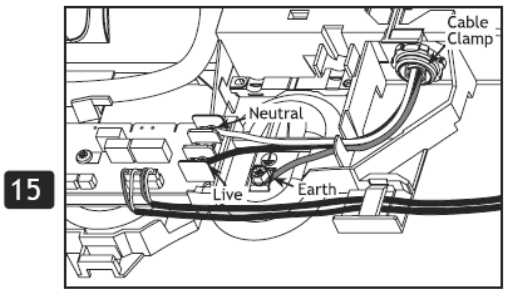

⚠WARNING!
The product MUST NOT be plugged in at this stage.

⚠WARNING!
If permanently connecting be sure the power is isolated.

14 Be sure there is a power outlet in reach of the supplied power cord. If there is not a suitable outlet available then have one installed by a qualified electrician.
Do not use an extension cord.

15 Alternatively, the DishDrawer® may be permanently connected to a flexible conduit.

Remove the power supply cord. Remove round knock-out for cable clamp. Fit suitable cable clamp for the conduit and terminate the wiring as shown. Terminate the ground wire using the saddle that was used on the existing earth.

⚠WARNING!
This must only be done by a certified person.

STEP 6: REFITTING THE TUB

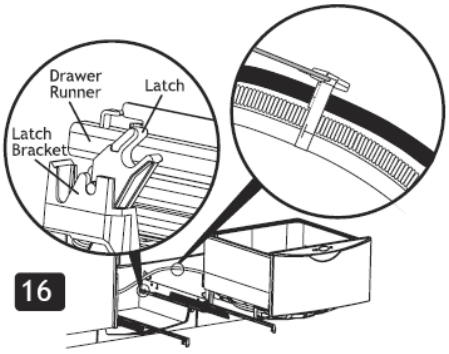

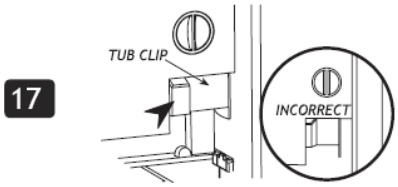

Important!
Before refitting the tub, be sure the hoses are not twisted and the latches at the rear of each drawer runner are facing forward.

16 To refit the tub, make sure both of the latches at the rear of each drawer runner are facing forward. Ensure hoses are hooping upward. Place the tub on the half open drawer runners and close the drawer.

17 Check the tub clips have reset on both sides of the tub. If not, pull the tub clips forward until the tub clip button is reset.

Important!
Be sure the tub clips on both sides are reset.

STEP 7: CONNECTING THE DRAIN HOSE(S)

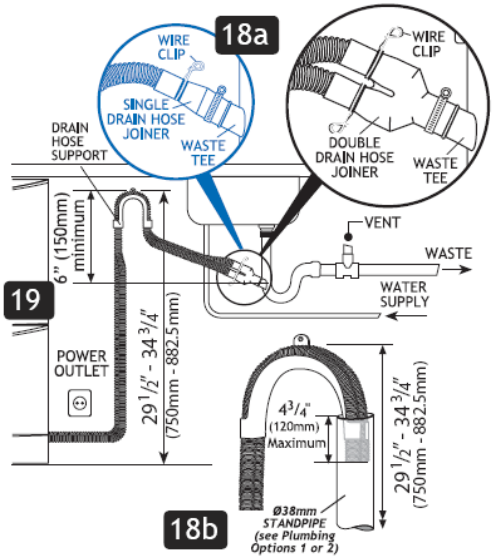

DishDrawer® with Hose Joiner (see Plumbing Options).
Remember to slip the wire clip(s) on the drain hose(s) first.

18a Slip a wire clip over each drain hose, then push the hoses into the Drain Hose Joiner firmly, 5 clicks. Position the wire clip(s) between the two positioning ribs on the Drain Hose Joiner.

Attach the Drain Hose Joiner to the waste tee (see Plumbing Options). Ensure a snug fit. If required a hose clamp may be used.

18b When using the standpipe option (see Plumbing Options), hose(s) should not extend further than 4¾" (120mm) down the standpipe, in order to prevent siphoning.

19 Attach the Drain Hose Support to the cabinetry (with the screw supplied) to prevent siphoning and to keep the drain hose(s) from kinking. If required, the Drain Hose(s) may be trimmed to a suitable length.

Important!

Minimum hole size to be connected to the waste tee is ½" (12.7mm).

Be sure the Drain Hose(s) are fully extended to prevent sagging (see diagram to the left).

The Drain Hose support must be used.

Drain Hose joiner must not support weight of hoses. Keep excess length of Drain Hose on the DishDrawer® side of the Drain Hose support or trim to suit.

STEP 8: CONNECTING THE INLET HOSE

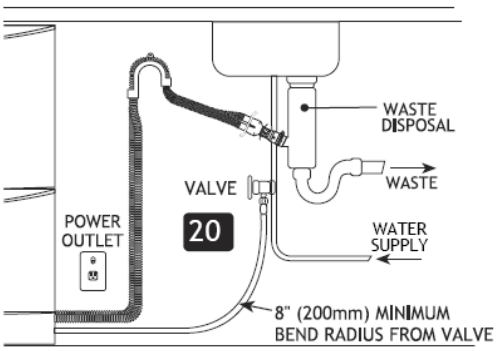

⚠WARNING!
DO NOT plug the product in at this stage.

Important!
DO NOT cut the inlet hose.

20 Connect the Inlet Hose to the water supply. Be sure the sealing washer is in place. The hose coupling must be tightened a further half turn after seal contact.

TIP - Turn the water valve ON to check for any leaks.

Alternatively flexible stainless steel hose can be plumbed directly to the inlet valve using a ⅜" brass adaptor (p/n 526161) available from the nearest Fisher & Paykel Authorized Service Agent.

NOTE: SINGLE MODELS DO NOT HAVE A TOE KICK TO INSTALL. PROCEED TO STEP 12 FINAL CHECK LIST.

STEP 9: MEASURING THE TOE KICK (DOUBLE MODELS ONLY)

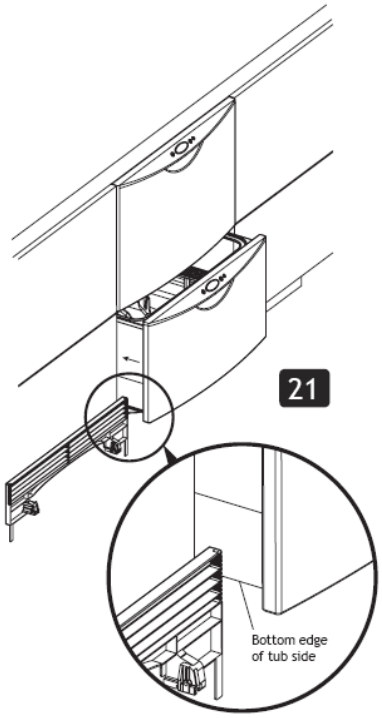

21 Partially open the bottom drawer. Turn Prefinished Toe Kick upside down and hold vertically against the bottom edge of the ***Tub side*** (not the drawer front).

Mark the position of the bottom edge of the Tub side on the Toe Kick.

Choose the nearest groove to the pencil mark which will result in the shortest Toe Kick.

STEP 10: TRIMMING THE TOE KICK (DOUBLE MODELS ONLY)

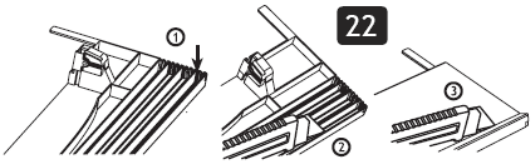

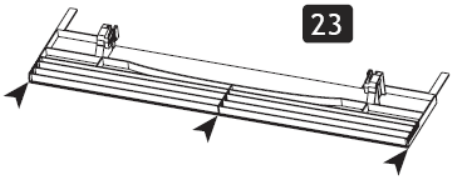

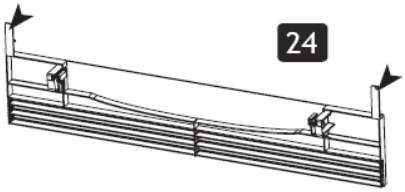

Important!

Before cutting ensure the Toe Kick is positioned on a wooden chopping board to avoid damage to surrounding area.

22 On the chosen groove cut down the vertical ribs at the centre and the ends using a knife. Cut along full length with a knife. Turn Toe Kick over, bend and then cut from front. Sand or scrape bottom edge to remove rough patches.

⚠WARNING!

Remove all sharp edges

23 To avoid a cutting hazard remove ***all*** sharp edges after trimming.

24 Remove Toe Kick tabs by snapping them off.

STEP 11: FITTING THE TOE KICK TO THE PRODUCT (DOUBLE MODELS ONLY)

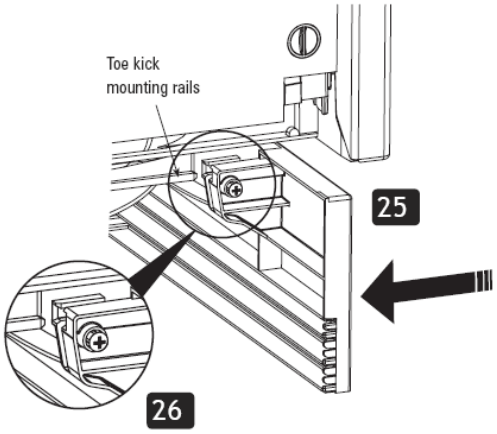

25 Partly open bottom drawer. Position Toe Kick behind door and slide onto the mounting rails on the underside of tub.

26 Close bottom drawer, check if flush with adjacent cabinetry. If required open drawer and adjust.
Note: Clearance between Toe Kick and floor must be 15/32" (12mm) minimum.

When Toe Kick is in position, open bottom drawer and gently fasten the Toe Kick screws, on each side.

Important!
DO NOT over tighten screws.
Overtightening will damage the plastic mounting detail.

STEP 12: FINAL CHECKLIST (DOUBLE AND SINGLE MODELS)

- ☐ Be sure product is level, securely fastened to the cabinetry and opens and closes freely. The DishDrawer® must be free to close with no resistance from the cabinetry.
- ☐ Be sure the inlet hose to valve connection is tightened a further half turn after seal contact.
- ☐ Be sure any knock-outs or plugs in drain connection have been drilled out and drain connection has been made.
- ☐ Turn ON the power and water supply. The DishDrawer® should beep and light up.
- ☐ Open the drawer(s) and check operation of Wash Program Control Panel and check the sprayarm(s) are in place and free to rotate.
- ☐ On the Wash Program Control Panel select Rinse and close the drawer(s). Start the program by pressing the Start/Pause button.
- ☐ After the Rinse program has finished, be sure the machine has run and drained correctly.
- ☐ Check water supply and drainage connection for leakage.
- ☐ *Repeat for each Drawer.*
- ☐ *LEAVE ALL LITERATURE WITH CUSTOMER.*

TROUBLE SHOOTING

- ☐ Excessive water remaining above the filter plate, after the rinse cycle; check for kinked drain hoses or blocked waste connection.
- ☐ No water supply; check water is connected, ON and there is the specified water pressure.
- ☐ DishDrawer® does not light up when the tub is opened; be sure power is connected and is switched ON.
- ☐ Water around water supply and drainage connections - check connections, existing plumbing and hoses for leaks.
- ☐ If a fault occurs, consult the Fault Code Section of the User Guide.
- ☐ If unable to resolve, contact your Customer Care Centre.

STEP 13: CUSTOMER CARE

Fisher&Paykel appliances
Customer Care

If you have any questions concerning the installation of this DishDrawer®, please contact your Fisher & Paykel Authorized Service Agent.

FOR THE UNITED STATES OF AMERICA (USA) & CANADA
Fisher & Paykel Appliances
5900 Skylab Road
Huntington Beach
CA 92647

PHONE TOLL FREE *1888 9 FNP USA*
1888 9 367 872

www.usa.fisherpaykel.com

BRIEF DESCRIPTION OF MODIFICATIONS TO DISHWASHER INSTALLATION INSTRUCTIONS:
Do not install the hot water line.

11 31 13.03 Dehumidifier

A whirlpool AD50DSS model dehumidifier will be used to condition the latent portion of the house. The appliance is kept in “full on” mode and controlled by the methods detailed in Section 23 09 00. The datasheet for the dehumidifier is given on the following page.

INSTALLATION REQUIREMENTS

Electrical Requirements

⚠WARNING

Electrical Shock Hazard

Plug into a grounded 3 prong outlet.

Do not remove ground prong.

Do not use an adapter.

Do not use an extension cord.

Failure to follow these instructions can result in death, fire, or electrical shock.

Specific electrical requirements are listed in the chart below. Follow the requirements for the type of plug on the power supply cord.

Power supply cord	Wiring requirements
	■ 115 volt (103.5 min. to 126.5 max.) ■ 15-amp time-delay fuse or circuit breaker

Recommended grounding method

This dehumidifier must be grounded. This dehumidifier is equipped with a power supply cord having a grounded 3 prong plug. To minimize possible shock hazard, the cord must be plugged into a mating, grounded 3 prong outlet, grounded in accordance with all local codes and ordinances. If a mating outlet is not available, it is the customer's responsibility to have a properly grounded 3 prong outlet installed by a qualified electrical installer.

It is the customer's responsibility:

- To contact a qualified electrical installer.
- To assure that the electrical installation is adequate and in conformance with National Electrical Code, ANSI/NFPA 70 - latest edition, and all local codes and ordinances.

Copies of the standards listed may be obtained from:

National Fire Protection Association
One Batterymarch Park
Quincy, MA 02269

Location Requirements

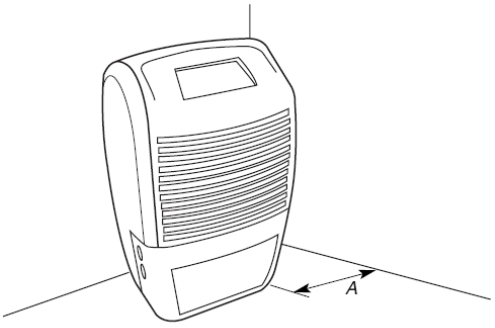

A. Allow at least 12" to 18" (30.5 to 45.7 cm) of air space.

- You will need a level surface strong enough to support the dehumidifier when its bucket is full of water.
- Keep all outside doors, windows and other openings closed when you are operating dehumidifier. Humid outdoor air will increase dehumidifier workload.
- Install dehumidifier in an area where the temperature will not fall below: 65°F (18°C) for Control Type 1 (model AD25B), 55°F (13°C) for Control Type 1 (model AD25D) and Control Type 2, 38°F (3°C) for Control Types 3 and 4. Lower temperatures will cause your performance to drop.
- Do not block the louvers on the front panel.

11 31 13.07 Range

The Whirlpool model GR7743LXS range is a combination cooktop-oven with electric resistance elements and a convection oven. If it is determined that the range draws significant standby power, it will be equipped with a cutoff switch outlet.

The datasheet and installation manual for the range are given on the following pages.

30" Freestanding Electric Range

PRODUCT MODEL NUMBERS

GR516LXS	RF261PXS
GR563LXS	RF262LXS
GR673LXS	RF263LXT
GR773LXS	RF264LXS
RF110AXS	RF265LXT
RF111PXS	RF362LXS
RF114PXS	RF362LXT
RF212PXS	RF367LXS
RF260BXS	RF462LXS

Electrical: When a 4-wire or 3-wire, single phase 120/240 volt, 60 Hz, AC only electrical supply is available (or, if specified on the model/serial rating plate, when a 4-wire or 3-wire single phase 120/208 volt 60 Hz, AC only electrical supply is available), a 40- or 50-amp maximum circuit protection is required, fused on both sides of the line. A time-delay fuse or circuit breaker is recommended. The model/serial rating plate is located on the oven frame behind the storage drawer panel.

OVERALL DIMENSIONS

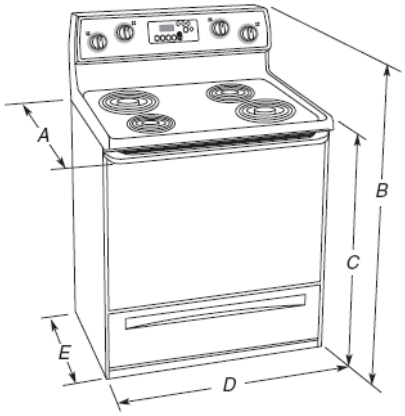

A. 27 1/8" (68.9 cm) depth with handle
B. 46 7/8" (119.1 cm) overall height
C. 36" (91.4 cm) cooktop height
D. 29 7/8" (75.9 cm) width
E. 24 13/16" (63 cm) depth

CABINET OPENING DIMENSIONS

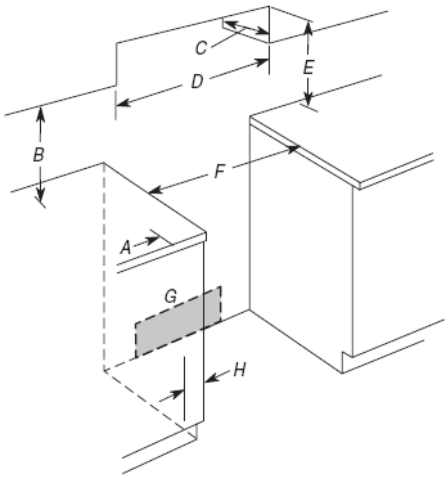

A. 4" (10.2 cm) min. clearance from both sides of range to side wall or other combustible material
B. 18" (45.7 cm) upper side cabinet to countertop
C. 13" (33 cm) max. upper cabinet depth
D. 30" (76.2 cm) min. opening width
E. For minimum clearance to top of cooktop, see NOTE.*
F. 30" (76.2 cm) min. opening width
G. Outlet - 8" (20.3 cm) to 22" (55.9 cm) from either cabinet, 5 1/2" (14.0 cm) max. from floor
H. 7/8" (2.2 cm) min. required between cutout and cabinet door or hinge

***NOTE:** 24" (61 cm) minimum when bottom of wood or metal cabinet is protected by not less than 1/4" (0.64 cm) flame retardant millboard covered with not less than No. 28 MSG sheet steel, 0.015" (0.4 mm) stainless steel, 0.024" (0.6 mm) aluminum or 0.020" (0.5 mm) copper.

30" (76.2 cm) minimum clearance between the top of the cooking platform and the bottom of an unprotected wood or metal cabinet.

Ref. 9762996
04-27-07

INSTALLATION INSTRUCTIONS
30" (76 CM) FREESTANDING ELECTRIC RANGES

Table of Contents

RANGE SAFETY

Your safety and the safety of others are very important.

We have provided many important safety messages in this manual and on your appliance. Always read and obey all safety messages.

This is the safety alert symbol.

This symbol alerts you to potential hazards that can kill or hurt you and others.

All safety messages will follow the safety alert symbol and either the word "DANGER" or "WARNING." These words mean:

⚠ DANGER — **You can be killed or seriously injured if you don't immediately follow instructions.**

⚠ WARNING — **You can be killed or seriously injured if you don't follow instructions.**

All safety messages will tell you what the potential hazard is, tell you how to reduce the chance of injury, and tell you what can happen if the instructions are not followed.

⚠ WARNING

Tip Over Hazard

A child or adult can tip the range and be killed.

Connect anti-tip bracket to rear range foot.

Reconnect the anti-tip bracket, if the range is moved.

Failure to follow these instructions can result in death or serious burns to children and adults.

IMPORTANT:
Save installation instructions for local electrical inspector's use.

9762996A

INSTALLATION REQUIREMENTS

Tools and Parts

Gather the required tools and parts before starting installation. Read and follow the instructions provided with any tools listed here.

Tools needed

- Tape measure
- Flat-blade screwdriver
- Level
- Hammer
- Hand or electric drill
- Wrench or pliers
- Marker or pencil
- Masking tape
- 3/8" drive ratchet
- 1/4" nut driver
- 3/8" and 5/16" nut driver
- 1/8" (3.2 mm) drill bit (for wood floors)
- 3/16" (4.8 mm) carbide-tipped masonry drill bit (for concrete/ceramic floors)

Parts supplied

Check that all parts are included.

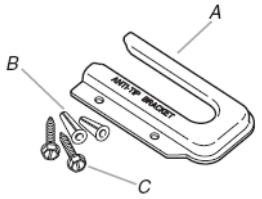

A. Anti-tip bracket
B. Plastic anchors (2)
C. #10 x 1½" screws (2)

- Anti-tip brackets must be securely mounted to subfloor. Thickness of flooring may require longer screws to anchor bracket to subfloor. Longer screws are available from your local hardware store.

Parts needed

Check local codes. Check existing electrical supply. See "Electrical Requirements" section.

All electrical connections should be made by a licensed, qualified electrical installer.

Location Requirements

IMPORTANT: Observe all governing codes and ordinances. Failure to meet codes and ordinances could lead to fire or electrical shock.

- It is the installer's responsibility to comply with installation clearances specified on the model/serial rating plate. The model/serial rating plate is located on the left side frame behind the storage drawer panel.
- The range should be located for convenient use in the kitchen.
- To eliminate the risk of burns or fire by reaching over heated surface units, cabinet storage space located above the surface units should be avoided. If cabinet storage is to be provided, the risk can be reduced by installing a range hood that projects horizontally a minimum of 5" (12.7 cm) beyond the bottom of the cabinets.
- Cabinet opening dimensions that are shown must be used. Given dimensions are minimum clearances.
- The floor anti-tip bracket must be installed. To install the anti-tip bracket shipped with the range, see "Install Anti-Tip Bracket" section.
- Grounded electrical supply is required. See "Electrical Requirements" section.

IMPORTANT: Some cabinet and building materials are not designed to withstand the heat produced by the oven for baking and self-cleaning. Check with your builder or cabinet supplier to make sure that the materials used will not discolor, delaminate or sustain other damage.

Mobile Home - Additional Installation Requirements

The installation of this range must conform to the Manufactured Home Construction and Safety Standard, Title 24 CFR, Part 3280 (formerly the Federal Standard for Mobile Home Construction and Safety, Title 24, HUD Part 280). When such standard is not applicable, use the Standard for Manufactured Home Installations, ANSI A225.1/NFPA 501A or local codes.

Mobile home installations require:

- When this range is installed in a mobile home, it must be secured to the floor during transit. Any method of securing the range is adequate as long as it conforms to the standards listed above.
- Four-wire power supply cord or cable must be used in a mobile home installation. The appliance wiring will need to be revised. See "Electrical Connection" section.

Product Dimensions

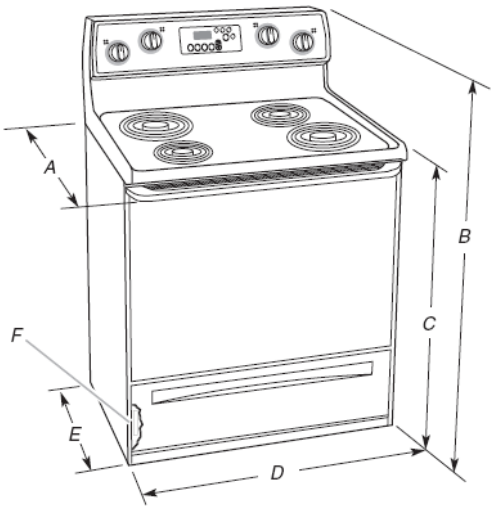

A. 27⅛" (68.9 cm) depth with handle
28⅛" (71.6 cm) depth with handle (KitchenAid models only)
B. 46⅞" (119.1 cm) overall height
46" (116.8 cm) overall height (KitchenAid models only)
C. 36" (91.4 cm) cooktop height
D. 29⅞" (75.9 cm) width
E. 24 13/16" (63 cm) depth
F. Model/serial rating plate (located on the left side frame behind storage drawer panel)

Installation Clearances

Cabinet opening dimensions shown are for 25" (64 cm) countertop depth, 24" (61 cm) base cabinet depth and 36" (91.4 cm) countertop height.

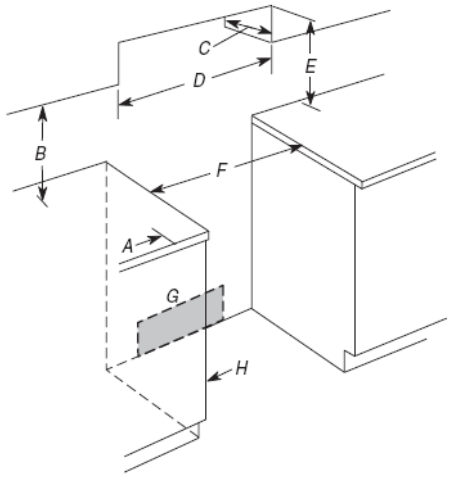

A. 4" (10.2 cm) min. clearance from both sides of range to side wall or other combustible material

B. 18" (45.7 cm) upper side cabinet to countertop

C. 13" (33 cm) max. upper cabinet depth

D. 30" (76.2 cm) min. opening width

E. For minimum clearance to top of cooktop, see NOTE.*

F. 30" (76.2 cm) min. opening width

G. Outlet - 8" (20.3 cm) to 22" (55.9 cm) from either cabinet, 5½" (14.0 cm) max. from floor

H. ⅞" (2.2 cm) min. required between cutout and cabinet door or hinge.

***NOTE:** 24" (61 cm) minimum when bottom of wood or metal cabinet is protected by not less than ¼" (0.64 cm) flame retardant millboard covered with not less than No. 28 MSG sheet steel, 0.015" (0.4 mm) stainless steel, 0.024" (0.6 mm) aluminum or 0.020" (0.5 mm) copper.

30" (76.2 cm) minimum clearance between the top of the cooking platform and the bottom of an unprotected wood or metal cabinet.

If installing a range hood or microwave hood combination above the range, follow the range hood or microwave hood combination installation instructions for dimensional clearances above the cooktop surface.

Electrical Requirements

If codes permit and a separate ground wire is used, it is recommended that a qualified electrical installer determine that the ground path and wire gauge are in accordance with local codes.

If codes permit and a separate ground wire is used, it is recommended that a qualified electrician determine that the ground path is adequate.

Do not use an extension cord.

Be sure that the electrical connection and wire size are adequate and in conformance with the National Electrical Code, ANSI/ NFPA 70-latest edition and all local codes and ordinances.

A copy of the above code standards can be obtained from:
National Fire Protection Association
One Batterymarch Park
Quincy, MA 02269

WARNING: Improper connection of the equipment-grounding conductor can result in a risk of electric shock. Check with a qualified electrician or service technician if you are in doubt as to whether the appliance is properly grounded. Do not modify the power supply cord plug. If it will not fit the outlet, have a proper outlet installed by a qualified electrician.

This range is manufactured with the neutral terminal connected to the cabinet. Use a 3-wire, UL listed, 40 or 50 amp power supply cord (pigtail); or if local codes do not permit ground through the neutral, use a 4-wire power supply cord rated at 250 volts, 40- or 50-amps and investigated for use with ranges.

Electrical Connection

To properly install your range, you must determine the type of electrical connection you will be using and follow the instructions provided for it here.

- Range must be connected to the proper electrical voltage and frequency as specified on the model/serial number rating plate. The model/serial number rating plate is located on the oven frame behind the storage drawer panel. Refer to the figures in the "Product Dimensions" section of the "Location Requirements" section.
- When a 4-wire or 3-wire, single phase 120/240 volt, 60 Hz, AC only electrical supply is available, a 50-amp maximum circuit protection is required (or, if specified on the model/ serial rating plate, when a 4-wire or 3-wire single phase 120/208 volt 60 Hz, AC only electrical supply is available, a 40- or 50-amp maximum circuit protection is required), fused on both sides of the line.
- A time-delay fuse or circuit breaker is recommended.
- The range can be connected directly to the fused disconnect (or circuit breaker box) through flexible or nonmetallic sheathed, copper or aluminum cable. See "Electrical Connection."
- Allow 2 to 3 ft (61.0 cm to 91.4 cm) of slack in the line so that the range can be moved if servicing is ever necessary.
- A UL listed conduit connector must be provided at each end of the power supply cable (at the range and at the junction box).
- Wire sizes and connections must conform with the rating of the range.
- The wiring diagram is located on the back of the range or inside the storage drawer in a clear plastic bag.

If connecting to a 4-wire system:

This range is manufactured with the ground connected to the cabinet. The ground must be revised so the green ground wire of the 4-wire power supply cord is connected to the cabinet. See "Electrical Connection."

Grounding through the neutral conductor is prohibited for new branch-circuit installations (1996 NEC); mobile homes; and recreational vehicles, or an area where local codes prohibit grounding through the neutral conductor.

When a 4-wire receptacle of NEMA Type 14-50R is used, a matching UL listed, 4-wire, 250-volt, 40- or 50-amp, range power supply cord (pigtail) must be used. This cord contains 4 copper conductors with ring terminals or open-end spade terminals with upturned ends, terminating in a NEMA Type 14-50R plug on the supply end.

The fourth (grounding) conductor must be identified by a green or green/yellow cover and the neutral conductor by a white cover. Cord should be Type SRD or SRDT with a UL listed strain relief and be at least 4 ft (1.22 m) long.

4-wire receptacle (14-50R)

The minimum conductor sized for the copper 4-wire power cord are:

40-amp circuit
2 No.-8 conductors
1 No.-10 white neutral
1 No.-8 green grounding

If connecting to a 3-wire system:

Local codes may permit the use of a UL listed, 3-wire, 250-volt, 40- or 50-amp range power supply cord (pigtail). This cord contains 3 copper conductors with ring terminals or open-end spade terminals with upturned ends, terminating in a NEMA Type 10-50P plug on the supply end. Connectors on the appliance end must be provided at the point the power supply cord enters the appliance. This uses a 3-wire receptacle of NEMA Type 10-50R.

3-wire receptacle (10-50R)

INSTALLATION INSTRUCTIONS

Unpack Range

⚠ WARNING

Excessive Weight Hazard

Use two or more people to move and install range.

Failure to do so can result in back or other injury.

1. Remove shipping materials, tape and protective film from range. Remove oven racks and parts package from inside oven.
2. Do not remove the shipping base at this time.

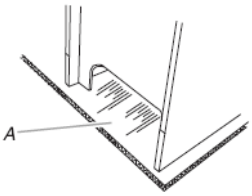

A. Shipping base

3. **On Ranges Equipped with Storage Drawers:**

   Remove the storage drawer. Use a ⅜" drive ratchet to lower the rear leveling legs one-half turn. Use a wrench or pliers to lower front leveling legs one-half turn.

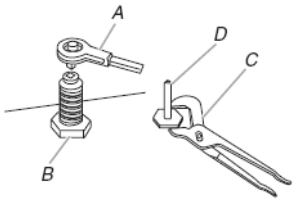

A. ⅜" drive ratchet
B. Rear leveling leg
C. Wrench or pliers
D. Front leveling leg

On Ranges Equipped with Warming Drawers:

Use a wrench or pliers to lower the front and rear leveling legs one-half turn.

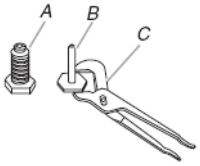

A. Rear leveling leg
B. Front leveling leg
C. Wrench or pliers

Install Anti-Tip Bracket

⚠WARNING

Tip Over Hazard

A child or adult can tip the range and be killed.

Connect anti-tip bracket to rear range foot.

Reconnect the anti-tip bracket, if the range is moved.

Failure to follow these instructions can result in death or serious burns to children and adults.

Contact a qualified floor covering installer for the best procedure for drilling mounting holes through your type of floor covering.

Before moving range, slide range onto shipping base, cardboard or hardboard.

1. Remove template from the anti-tip bracket kit (found inside the oven cavity) or from the back of this manual.
2. Place template on the floor in cabinet opening so that the left edge is against cabinet and top edge is against rear wall, molding or cabinet.
3. Tape template into place.
4. If countertop is not flush with cabinet opening edge, align template with overhang.

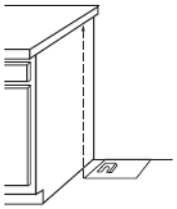

If cabinet opening is wider than that specified in the "Location Requirements" section, adjust template so range will be centered in cabinet opening.

5. To mount anti-tip bracket to wood floor, drill two ⅛" (3.2 mm) holes at the positions marked on the bracket template. Remove template from floor.

To mount anti-tip bracket to concrete or ceramic floor, use a 3/16" (4.8 mm) masonry drill bit to drill 2 holes at the positions marked on the bracket template. Remove template from floor.

6. Tap plastic anchors into holes with a hammer.
7. Align anti-tip bracket holes with holes in floor. Fasten anti-tip bracket with screws provided.

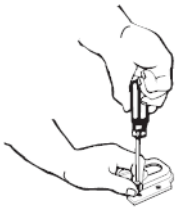

Depending on the thickness of your flooring, longer screws may be necessary to anchor the bracket to the subfloor. Longer screws are available from your local hardware store.

8. Move range close enough to opening to allow for electrical connections to be made. Remove shipping base, cardboard or hardboard from under range.
9. Make electrical connections as described in the "Electrical Connection" section.
10. Move range into its final location making sure rear leveling leg slides into anti-tip bracket.

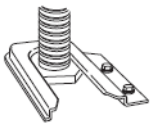

11. If installing the range in a mobile home, you must secure the range to the floor. Any method of securing the range is adequate as long as it conforms to the standards in the "Location Requirements" section.
12. Continue installing your range using the following installation instructions.

Electrical Connection - U.S.A. Only

Power Supply Cord

⚠WARNING

Electrical Shock Hazard

Disconnect power before servicing.

Use a new 40 amp power supply cord.

Plug into a grounded outlet.

Failure to follow these instructions can result in death, fire, or electrical shock.

Direct Wire

⚠WARNING

Electrical Shock Hazard

Disconnect power before servicing.

Use 8 gauge copper or 6 gauge aluminum wire.

Electrically ground range.

Failure to follow these instructions can result in death, fire, or electrical shock.

1. Disconnect power.
2. Remove the terminal block cover screws located on the back of the range. Pull cover down and toward you to remove cover from range.

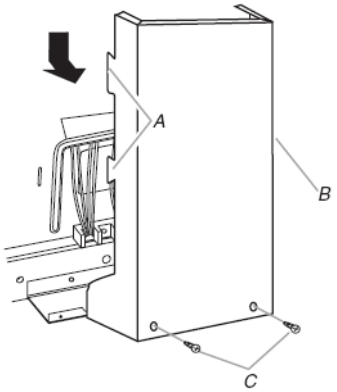

A. Two mounting tabs each side
B. Terminal block cover
C. Hex-head screws

3. Add strain relief.

Style 1: Power supply cord strain relief

- Remove the knockout for the power supply cord.
- Assemble a UL listed strain relief in the opening.

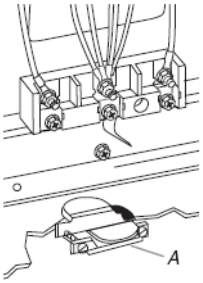

A. UL listed strain relief

- Tighten strain relief screw against the power supply cord.

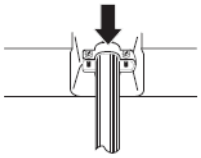

6

Style 2: Direct wire strain relief

- Remove the knockout as needed for the flexible conduit connection.
- Assemble a UL listed conduit connector in the opening.

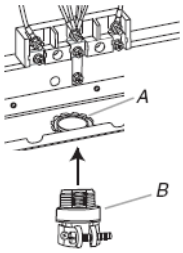

A. Removable retaining nut
B. Strain relief

- Tighten strain relief screw against the flexible conduit.

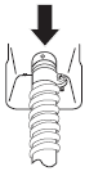

4. Complete installation following instructions for your type of electrical connection:

   4-wire (recommended)

   3-wire (if 4-wire is not available)

Electrical Connection Options

If your home has:	And you will be connecting to:	Go to Section:
4-wire receptacle (NEMA type 14-50R) 	A UL listed, 250-volt minimum, 40-amp, range power supply cord	4-wire connection: Power supply cord
4-wire direct 	A fused disconnect or circuit breaker box	4-wire connection: Direct wire
3-wire receptacle (NEMA type 10-50R) 	A UL listed, 250-volt minimum, 40-amp, range power supply cord	3-wire connection: Power supply cord
3-wire direct 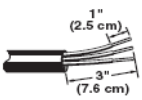	A fused disconnect or circuit breaker box	3-wire connection: Direct wire

4-wire connection: Power supply cord

Use this method for:

- New branch-circuit installations (1996 NEC)
- Mobile homes
- Recreational vehicles
- In an area where local codes prohibit grounding through the neutral

1. Remove the ground-link screw from the range frame. Save the ground link screw and cup washer. Bend the ground-link away from the range so that it does not contact the range.

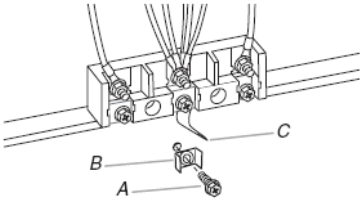

A. Ground-link screw
B. Cup washer
C. Ground-link bent away from range

2. Connect the green ground wire from the power supply cord to the range using the ground-link screw and cup washer. The ground wire must be attached first and must not contact any other terminal.
3. Use a ¼" nut driver to remove the hex washer head screws from the terminal blocks.
4. Connect the neutral (center) wire to the center terminal connector using one of the hex washer head screws. Securely tighten screw for proper electrical connection.

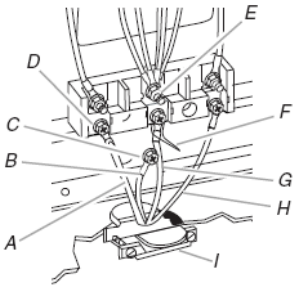

A. Line 1
B. Green ground wire
C. Ground-link screw
D. Hex washer head screw
E. Silver-colored terminal block screw
F. Ground-link
G. Neutral (center) wire
H. Line 2
I. UL listed strain relief and 40- or 50-amp range power supply cord

5. Connect the other 2 wires (lines 1 and 2) to the outer aluminum terminal blocks.
6. Securely tighten screws for proper electrical connection.
7. Tighten strain relief screws.
8. Replace terminal block cover.

3-wire connection: Power supply cord

Use this method only if local codes permit connecting cabinet-ground conductor to neutral wire of power supply cord.

1. Use a ¼" nut driver and remove the hex washer head screws from the aluminum terminal blocks.
2. Connect the neutral (center) wire to the center terminal connector using one of the hex washer head screws. Securely tighten screw for proper electrical connection.

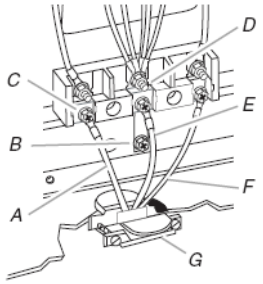

A. Line 1
B. Ground-link
C. Hex washer head screw
D. Silver-colored terminal block screw
E. Neutral (center) wire
F. Line 2
G. UL listed strain relief and 40- or 50-amp range power supply cord

3. Connect the other 2 wires (lines 1 and 2) to the outer terminal screws on the terminal block.
4. Tighten strain relief screws.
5. Replace terminal block cover.

Direct Wire Installation: Copper or Aluminum Wire

This range may be connected directly to the fuse disconnect or circuit breaker box. Depending on your electrical supply, make the required 3-wire or 4-wire connection.

1. Strip outer covering back 3" (7.6 cm) to expose wires. Strip the insulation back 1" (2.5 cm) from the end of each wire.

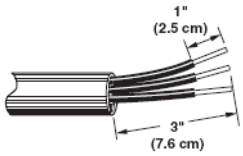

2. Allow enough slack in the wire to easily attach the wiring terminal block.
3. Complete electrical connection according to your type electrical supply (4-wire or 3-wire electrical connection).

4-wire connection: Direct wire

Use this method for:

- New branch-circuit installations (1996 NEC)
- Mobile homes
- Recreational vehicles
- In an area where local codes prohibit grounding through the neutral

1. Remove the ground-link screw from the range frame. Save the ground-link screw and cup washer. Bend the ground-link away from the range so that it does not contact the range.

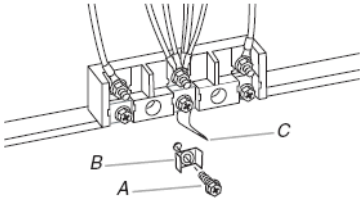

A. Ground-link screw
B. Cup washer
C. Ground-link bent away from range

2. Connect the bare ground wire to the range using the ground-link screw and cup washer. The ground wire must be attached first and must not contact any other terminal.

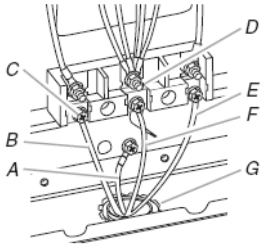

A. Bare wire from power supply cable
B. Line 1
C. Hex washer head screw
D. Silver-colored terminal block screw
E. Line 2
F. Neutral (white) wire
G. UL listed strain relief and power supply cable

3. Loosen (do not remove) the hex washer head screw and insert the neutral (white) wire under the screw clamp at the bottom of the center position terminal connector.
4. Insert the other 2 wires (lines 1 and 2) under the other 2 screw clamps.

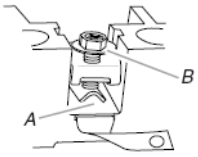

A. Insert wire under screw clamp.
B. Hex washer head screw

5. Securely tighten the hex washer head screws to 35 lbs-in. (4.0 N-m) minimum torque to make proper electrical connection.
6. Tighten the locking ring of the conduit connector.
7. Replace the terminal block cover.

3-wire connection: Direct wire

Use this method only if local codes permit connecting ground conductor to neutral supply wire.

1. Loosen (do not remove) the hex washer head screws and insert the neutral (white) wire under the screw clamp at the bottom of the center position terminal connector.

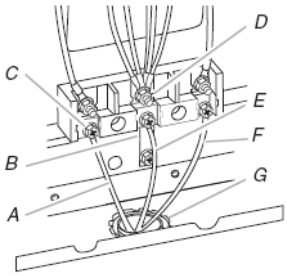

A. Line 1
B. Ground-link
C. Hex washer head screw
D. Silver-colored terminal block screw
E. Neutral (white) wire
F. Line 2
G. UL listed strain relief and power supply cable

2. Insert the other 2 wires (lines 1 and 2) under the other 2 screw clamps.

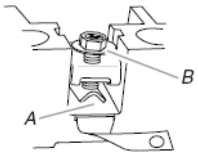

A. Insert wire under screw clamp.
B. Hex washer head screw

3. Securely tighten the hex washer head screws to 35 lbs-in. (4.0 N-m) minimum torque to make a proper electrical connection.
4. Tighten the locking ring of the conduit connector.
5. Replace the terminal block cover.

Verify Anti-Tip Bracket Location

1. Pull drawer open to first stop position. Lift front of drawer to clear white wheels in drawer guides. Remove drawer and set it aside on a protected surface.

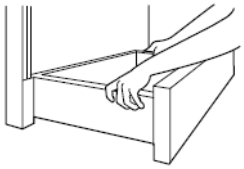

2. Making sure the anti-tip bracket is installed:
   - Look for the anti-tip bracket securely attached to floor.
   - Slide range back so rear range foot is under anti-tip bracket.

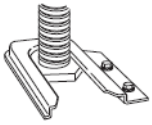

3. If installing the range in a mobile home, you must secure the range to the floor. Any method of securing the range is adequate as long as it conforms to the standards in the "Location Requirements" section.

Level Range

1. Place rack in oven. Place level on rack and check levelness of range, first side to side; then front to back.

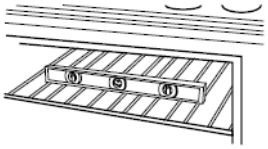

If range is not level, pull range forward until rear leveling leg is removed from the anti-tip bracket.

On Ranges Equipped with Storage Drawers:

Use ⅜" drive ratchet and channel lock pliers to adjust leveling legs up or down until range is level. Push range back into position. Check that rear leveling leg is engaged in anti-tip bracket.

On Ranges Equipped with Warming Drawers:

Use channel lock pliers to adjust leveling legs up or down until range is level. Push range back into position. Check that rear leveling leg is engaged in anti-tip bracket.

NOTE: Range must be level for satisfactory baking conditions.

2. Replace the storage drawer (and warming drawer on some models).

Complete Installation

1. Check that all parts are now installed. If there is an extra part, go back through the steps to see which step was skipped.
2. Check that you have all of your tools.
3. Dispose of/recycle all packaging materials.
4. Check that the range is level. See "Level Range."
5. Use a mild solution of liquid household cleaner and warm water to remove waxy residue caused by protective shipping material. Dry thoroughly with a soft cloth. For more information, read the "Range Care" section of the Use and Care Guide.
6. Read "Range Use" in the range Use and Care Guide.
7. Plug power cord into appropriate outlet. Turn power on.
8. Turn on surface burners and oven. See the Use and Care Guide for specific instruction on range operation.

If range does not operate, check the following:

- Household fuse is intact and tight; or circuit breaker has not tripped.
- Range is plugged into an outlet.
- Electrical supply is connected.
- See "Troubleshooting" in the Use and Care Guide.

  When the range has been on for 5 minutes, check for heat. If range is cold, turn off the range and contact a qualified technician.

Moving the Range

⚠WARNING

Tip Over Hazard

A child or adult can tip the range and be killed.

Connect anti-tip bracket to rear range foot.

Reconnect the anti-tip bracket, if the range is moved.

Failure to follow these instructions can result in death or serious burns to children and adults.

When moving range, slide range onto cardboard or hardboard to avoid damaging the floor covering.

If removing the range is necessary for cleaning or maintenance:

For power supply cord-connected ranges:

1. Unplug the power supply cord.
2. Slide range forward to complete cleaning or maintenance.
3. Check that anti-tip bracket is installed:
   - Look for the anti-tip bracket securely attached to floor.
   - Slide range back so rear range foot is under anti-tip bracket.

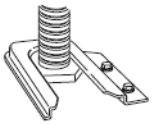

4. Check that range is level.

For direct-wired ranges:

⚠WARNING

Electrical Shock Hazard

Disconnect power before servicing.

Replace all parts and panels before operating.

Failure to do so can result in death or electrical shock.

1. Disconnect power.
2. Disconnect wiring.
3. Slide range forward to complete cleaning or maintenance.
4. Check that anti-tip bracket is installed:
   - Look for the anti-tip bracket securely attached to floor.
   - Slide range back so rear range foot is under anti-tip bracket.

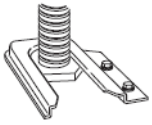

5. Check that range is level.

ANTI-TIP BRACKET TEMPLATE

Cut on dotted lines and place the left edge against the left side cabinet and the top edge against the rear wall.

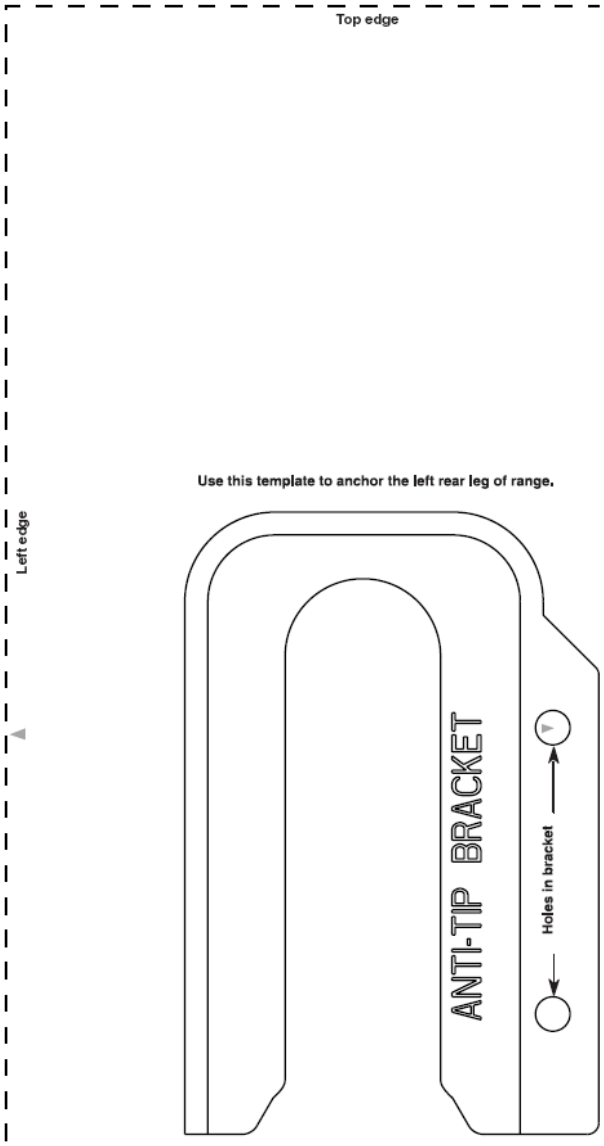

11 31 13.09 Microwave

The Whirlpool model MH3184XP microwave has “family capacity” and will include ventilation capabilities.

The datasheet and installation manual for the microwave are given on the following pages.

Whirlpool® Microwave Hood Combination

PRODUCT MODEL NUMBERS

MH3184XP
MH3185XP

Electrical: A 120-volt, 60 Hz, AC-only, 15 or 20 amp electrical supply located in the upper cabinet as close as possible to the microwave oven hood. A time-delay fuse or circuit breaker and separate circuit is recommended.

OVERALL DIMENSIONS

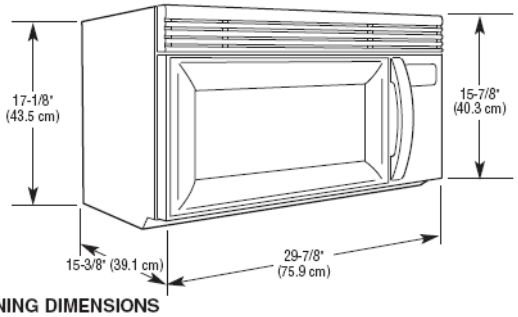

CABINET OPENING DIMENSIONS

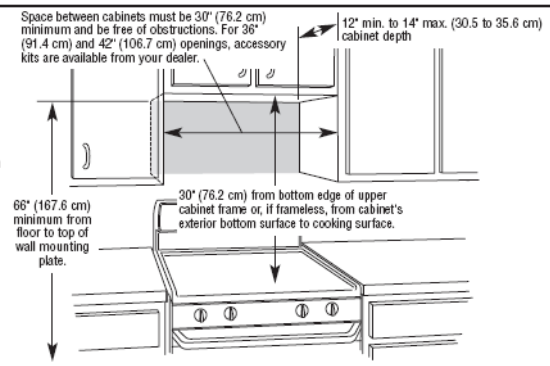

NOTE: There must be at least one 2" x 4" (50.8 cm x 101.6 cm) wall stud and minimum 3/8" (9.5 mm) thickness drywall or plaster/lathe within cabinet opening. Must be able to support 150 lbs. (68 kg).

VENTING REQUIREMENTS

Roof venting

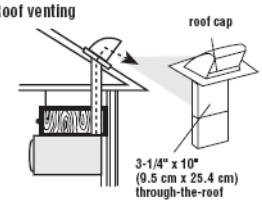

Wall venting

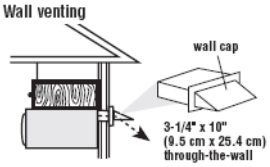

Recommended standard fittings

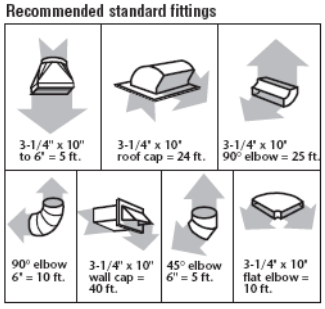

If the existing vent is round, a rectangular-to-round adapter must be used and a rectangular 3" (7.6 cm) extension vent between the damper assembly and the adapter must be installed to prevent sticking of the exhaust damper.

For wall or roof venting methods:

If the wall exhaust method is chosen, be sure that there is proper clearance within the wall for the damper to fully open.

Wall and roof caps must have back-draft damper.

We recommend:

- ✔ using rigid metal vent.
- ✔ that length of vent and number of elbows should be kept to a minimum to provide efficient performance.
- ✔ that size of vent should be uniform.
- ✔ using duct tape to seal all joints in the vent system.
- ✔ using caulking compound to seal exterior wall or roof opening around cap.
- ✔ two elbows should not be installed together.

We do NOT recommend:

- ✔ flexible metal vent.

NOTE: If flexible metal vent must be used, calculate each foot of flexible metal vent as two feet of rigid metal vent. Flexible metal elbows count twice as much as standard elbows.

Recommended vent length

Use 3-1/4" x 10" (9.5 cm x 25.4 cm) rectangular or 6" (15.2 cm) round vent. The total length of the vent system including straight vent, elbow(s), transitions, wall or roof caps must not exceed the equivalent of 140 feet (42.7 m) of 3-1/4" x 10" (9.5 cm x 25.4 cm) rectangular or 6" (15.2 cm) round vent. For best performance, use no more than three 90° elbows. To calculate the length of system you need, add the equivalent feet for each vent piece used in the system. See examples below.

3-1/4" x 10" (9.5 cm x 25.4 cm) vent system

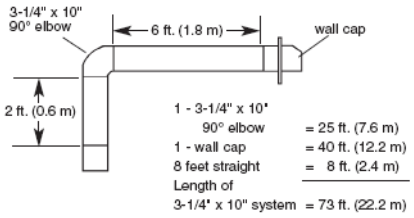

6" (15.2 cm) vent system

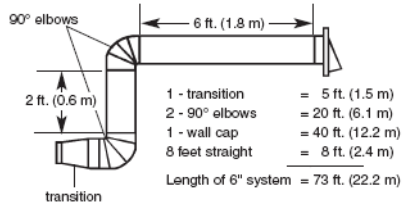

Because Whirlpool Corporation policy includes a continuous commitment to improve our products, we reserve the right to change materials and specifications without notice.

Dimensions are for planning purposes only. For complete details, see Installation Instructions packed with product. Specifications subject to change without notice.

Ref. 8206327
05-30-06

MICROWAVE HOOD COMBINATION INSTALLATION INSTRUCTIONS

This product is suitable for use above electric or gas cooking products up to 36" (91.4 cm) wide.

These installation instructions cover different models. The appearance of your particular model may differ slightly from the illustration in these installation instructions.

NOTES:

- Proper installation is the responsibility of the installer.
- Product failure due to improper installation is not covered under the warranty.

Table of Contents

MICROWAVE HOOD COMBINATION SAFETY

Your safety and the safety of others are very important.

We have provided many important safety messages in this manual and on your appliance. Always read and obey all safety messages.

This is the safety alert symbol.

This symbol alerts you to potential hazards that can kill or hurt you and others.

All safety messages will follow the safety alert symbol and either the word "DANGER" or "WARNING." These words mean:

⚠ DANGER — **You can be killed or seriously injured if you don't immediately follow instructions.**

⚠ WARNING — **You can be killed or seriously injured if you don't follow instructions.**

All safety messages will tell you what the potential hazard is, tell you how to reduce the chance of injury, and tell you what can happen if the instructions are not followed.

IMPORTANT: Read Installation Instructions thoroughly before beginning installation. Save Installation Instructions for local house inspector's use.

8206327

INSTALLATION REQUIREMENTS

Tools and Parts

Tools Needed

Gather the required tools and parts before starting installation. Read and follow the instructions provided with any tools listed here.

- Measuring tape
- Pencil
- Masking tape or thumbtacks
- Scissors
- No. 2 Phillips screwdriver
- No. 3 Phillips screwdriver for 1/4-20 x 3" round-head bolts
- Electric drill
- 3/16" (5 mm), 3/8" (10 mm) drill bits
- 3/4" (19 mm) hole saw
- Stud finder
- 7/16" socket wrench (or box wrench) for 1/4" x 2" lag screws
- 1½" (3.8 cm) diam. hole drill bit for wood or metal cabinet
- Keyhole saw
- Caulking gun and weatherproof caulking compound
- Duct tape

Parts Supplied

For reorder information, see "Replacement Parts" section.

NOTE: The hardware items listed here are for wood studs. For other types of wall structures, be sure to use appropriate fasteners.

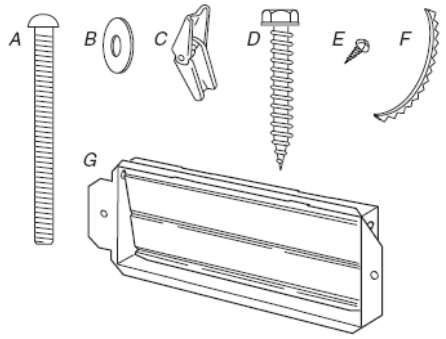

A. 1/4-20 x 3" bolts (6)
B. Washers (2)
C. Toggle nuts (4)
D. 1/4" x 2" lag screws (4)
E. Sheet metal screws (2)
F. Power supply cord bushing (1)
G. Damper assembly (for wall or roof venting)

Not Shown:
Upper cabinet template
Mounting plate (attached to back of microwave oven)
Aluminum grease filters
Charcoal filters (Depending on model, charcoal filters may not be included. See Use and Care Guide.)

NOTE: Depending on model, aluminum grease filter and charcoal filter may be combined.

Materials needed

- Standard fittings for wall or roof venting. See "Venting Design Specifications" section.

Location Requirements

Check the opening where the microwave oven will be installed. The location must provide:

- Minimum installation dimensions. See "Installation Dimensions" illustration.
- Minimum one 2" x 4" (50.8 x 101.6 mm) wood wall stud and minimum 3/8" (9.5 mm) thickness drywall or plaster/lath within cabinet opening.
- Support for weight of 150 lbs (68 kg), which includes microwave oven and items placed inside the microwave oven and upper cabinet.
- Grounded electrical outlet inside upper cabinet. See "Electrical Requirements" section.

NOTES:

- If installing the microwave oven near a left sidewall, make sure there is at least 6" (15.2 cm) of clearance between the wall and the microwave oven, so that the door can open fully.
- Some cabinet and building materials are not designed to withstand the heat produced by the microwave oven for cooking. Check with your builder or cabinet supplier to make sure that the materials used will not discolor, delaminate or sustain other damages.

Special Requirements

For Wall Venting Installation Only:

- Cutout must be free of any obstructions so that the vent tube fits properly, and the damper blade opens freely and fully.

For Roof Venting Installation Only:

- If you are using rectangular to round transition piece, the 3" (7.6 cm) clearance needs to exist above the microwave oven so that the damper blade can open freely and fully. See "Rectangular to Round Transition" illustration in "Venting Design Specifications" section.

Installation Dimensions

NOTE: The grounded 3 prong outlet must be inside the upper cabinet. See "Electrical Requirements" section.

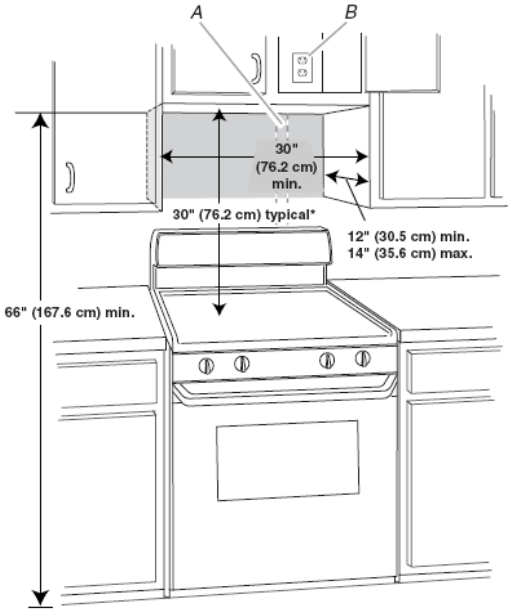

A. 2" x 4" wall stud
B. Grounded 3 prong outlet

*30" (76.2 cm) is typical for 66" (167.6 cm) installation height. Exact dimensions may vary depending on type of range/cooktop below.

Product Dimensions

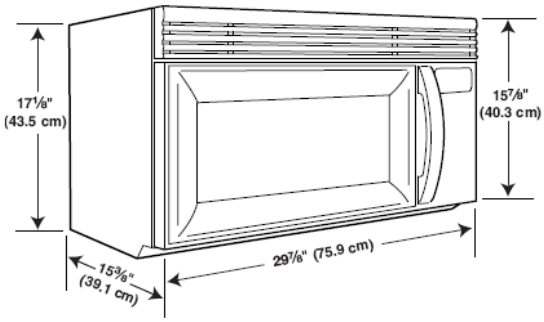

Electrical Requirements

⚠WARNING

Electrical Shock Hazard

Plug into a grounded 3 prong outlet.

Do not remove ground prong.

Do not use an adapter.

Do not use an extension cord.

Failure to follow these instructions can result in death, fire, or electrical shock.

Observe all governing codes and ordinances.

Required:

- A 120 Volt, 60 Hz, AC only, 15- or 20-amp electrical supply with a fuse or circuit breaker.

Recommended:

- A time-delay fuse or time-delay circuit breaker.
- A separate circuit serving only this microwave oven.

GROUNDING INSTRUCTIONS

- **For all cord connected appliances:**
  The microwave oven must be grounded. In the event of an electrical short circuit, grounding reduces the risk of electric shock by providing an escape wire for the electric current. The microwave oven is equipped with a cord having a grounding wire with a grounding plug. The plug must be plugged into an outlet that is properly installed and grounded.

WARNING: Improper use of the grounding plug can result in a risk of electric shock. Consult a qualified electrician or serviceman if the grounding instructions are not completely understood, or if doubt exists as to whether the microwave oven is properly grounded.

Do not use an extension cord. If the power supply cord is too short, have a qualified electrician or serviceman install an outlet near the microwave oven.

SAVE THESE INSTRUCTIONS

5. Rotate blower motor end over end.

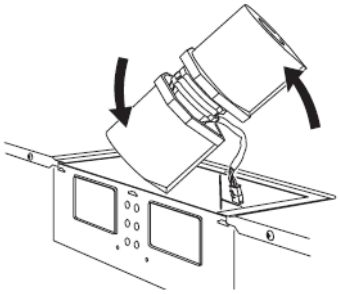

6. Rotate blower motor so that exhaust ports face the back of microwave oven, and lower it back into the microwave oven.

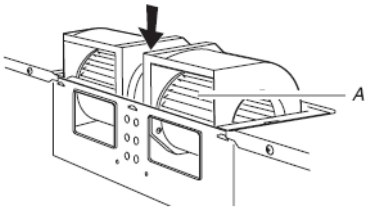

A. Exhaust port

7. Reattach blower motor to back of microwave oven with 2 screws removed in Step 3.
8. Reattach damper plate. Make sure tabs at top and back of damper plate are inserted fully into their respective slots in the microwave oven.

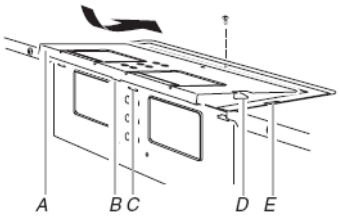

A. Damper plate
B. Tabs at back of damper plate
C. Slots in back of microwave oven exterior
D. Damper plate tabs
E. Slots in top of microwave oven exterior

9. Secure damper plate with screw.

Roof Venting Installation Only

1. Repeat Step 1 from "Wall Venting Installation Only."
2. Repeat Step 2 from "Wall Venting Installation Only."
3. Repeat Step 3 from "Wall Venting Installation Only."
4. Repeat Step 4 from "Wall Venting Installation Only."
5. Rotate blower motor so that exhaust ports face the top of microwave oven, and flat sides of blower motor face back of microwave oven. Lower blower motor back into microwave oven.

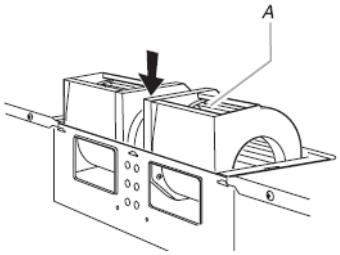

A. Exhaust port

IMPORTANT: If blower motor is not positioned with flat sides facing the back of the microwave oven (as shown), performance will be poor.

6. Reattach blower motor to back of microwave oven with 2 screws removed in Step 3 of "Wall Venting Installation Only." Securely tighten screws.

NOTE: If blower motor is not correctly oriented, the 2 screws removed in Step 3 cannot be reattached to the microwave oven.

7. Reattach damper plate. Make sure tabs at top and back of damper plate are inserted fully into their respective slots in the microwave oven.

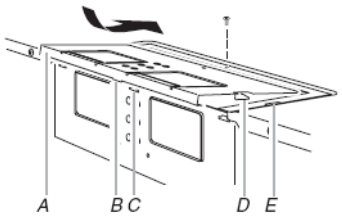

A. Damper plate
B. Tabs at back of damper plate
C. Slots in back of microwave oven exterior
D. Damper plate tabs
E. Slots in top of microwave oven exterior

8. Secure damper plate with screw.

5. Rotate blower motor end over end.

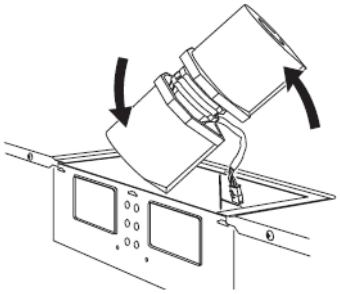

6. Rotate blower motor so that exhaust ports face the back of microwave oven, and lower it back into the microwave oven.

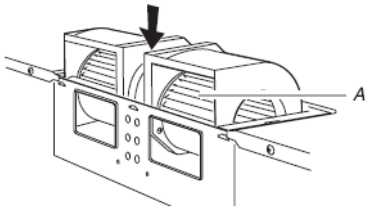

A. Exhaust port

7. Reattach blower motor to back of microwave oven with 2 screws removed in Step 3.
8. Reattach damper plate. Make sure tabs at top and back of damper plate are inserted fully into their respective slots in the microwave oven.

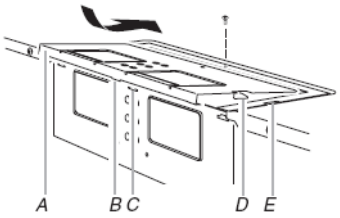

A. Damper plate
B. Tabs at back of damper plate
C. Slots in back of microwave oven exterior
D. Damper plate tabs
E. Slots in top of microwave oven exterior

9. Secure damper plate with screw.

Roof Venting Installation Only

1. Repeat Step 1 from "Wall Venting Installation Only."
2. Repeat Step 2 from "Wall Venting Installation Only."
3. Repeat Step 3 from "Wall Venting Installation Only."
4. Repeat Step 4 from "Wall Venting Installation Only."
5. Rotate blower motor so that exhaust ports face the top of microwave oven, and flat sides of blower motor face back of microwave oven. Lower blower motor back into microwave oven.

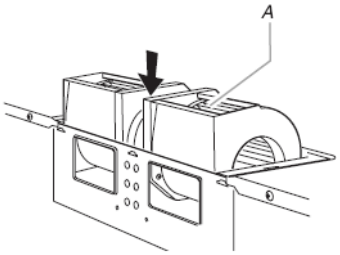

A. Exhaust port

IMPORTANT: If blower motor is not positioned with flat sides facing the back of the microwave oven (as shown), performance will be poor.

6. Reattach blower motor to back of microwave oven with 2 screws removed in Step 3 of "Wall Venting Installation Only." Securely tighten screws.

NOTE: If blower motor is not correctly oriented, the 2 screws removed in Step 3 cannot be reattached to the microwave oven.

7. Reattach damper plate. Make sure tabs at top and back of damper plate are inserted fully into their respective slots in the microwave oven.

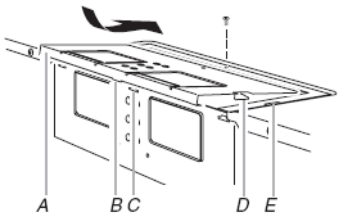

A. Damper plate
B. Tabs at back of damper plate
C. Slots in back of microwave oven exterior
D. Damper plate tabs
E. Slots in top of microwave oven exterior

8. Secure damper plate with screw.

Locate Wall Stud(s)

NOTE: If no wall studs exist within the cabinet opening, do not install the oven.

See illustrations in "Possible Wall Stud Configurations."

1. Using a stud finder, locate the edges of the wall stud(s) within the opening.
2. Mark the center of each stud, and draw a plumb line down each stud center. See illustrations in "Possible Wall Stud Configurations."

Possible Wall Stud Configurations

These depictions show examples of preferred installation configurations with the mounting plate.

No Wall Studs at Corner Holes
Figure 1

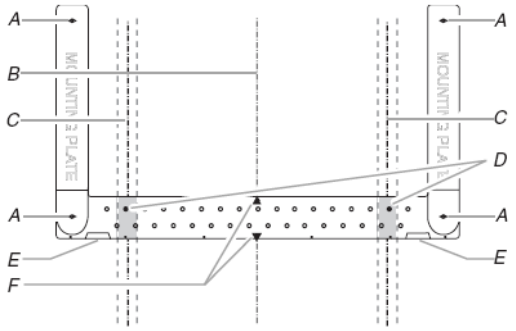

No Wall Studs at Corner Holes
Figure 2

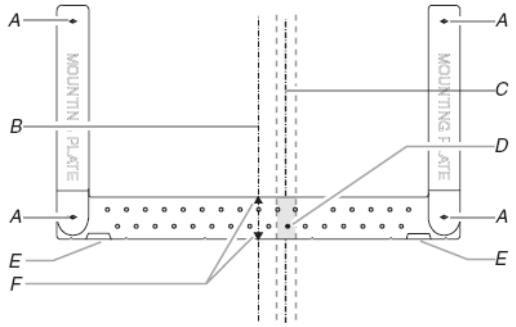

NOTE: If wall stud is within 6" (15.2 cm) of the vertical centerline (see "Mark Rear Wall" section), only recirculation or roof venting installation can be done.

One Wall Stud at Two Corner Holes
Figure 3

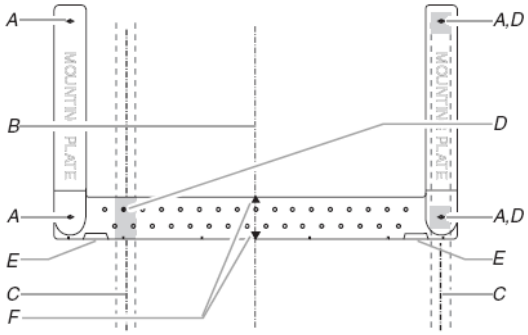

Wall Studs at All Four Corner Holes
Figure 4

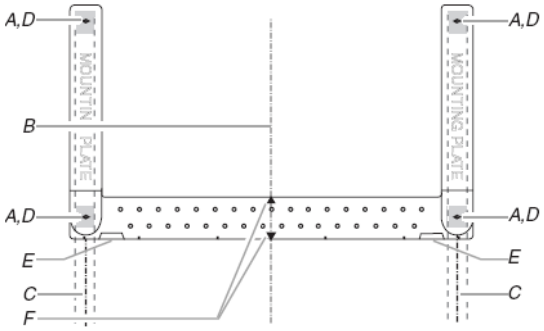

A. Corner holes (on mounting plate)
B. Cabinet opening vertical centerline
C. Wall stud centerlines
D. Holes for lag screws
E. Support tabs
F. Mounting plate center markers

Mark Rear Wall

The microwave oven must be installed on a minimum of 1 wall stud, preferably 2, using a minimum of 1 lag screw, preferably 2 or more.

1. Using measuring tape, find and clearly mark the vertical centerline of the opening.

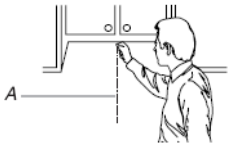

A. Centerline

2. With the support tabs facing forward (see illustrations in "Possible Wall Stud Configurations" in "Locate Wall Stud(s)" section), align the mounting plate center markers to the centerline on the wall, making sure it is level, and that the top of the mounting plate is butted up against the bottom edge of the upper cabinet.

NOTE: If the front edge of the upper cabinet is lower than the back edge, lower the mounting plate so that its top is level with the front edge of the cabinet.

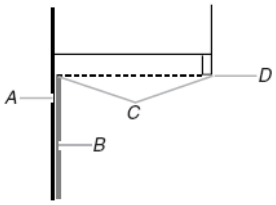

A. Rear wall
B. Mounting plate
C. Top of mounting plate must align with front edge of cabinet.
D. Front edge of upper cabinet

3. Holding the mounting plate in place, mark the 4 corner holes.
4. Find the wall stud centerline(s) marked in Step 2 of "Locate Wall Stud(s)," and mark at least 1, preferably 2 or more, hole(s) through the mounting plate, closest to the centerline(s). See figures 1, 2 and/or 3 in "Possible Wall Stud Configurations" in "Locate Wall Stud(s)" section. The blackened holes in the shaded areas are ideal hole locations.
5. Set mounting plate aside.

Wall Venting Installation Only

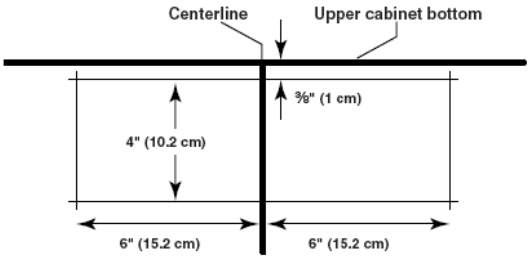

6. Mark the centerline 3/8" (1 cm) down from the bottom edge of the upper cabinet.
7. Using measuring tape, measure out 6" (15.2 cm) on both sides of the centerline, and mark.
8. Measure down 4" (10.2 cm) from the mark made in Step 6, and mark.
9. Using a straightedge, draw the 2 horizontal, level lines through the marks made in steps 6 and 8.
10. Draw the 2 vertical, plumb lines down from the marks made in Step 7 to complete the 12" x 4" (30.5 x 10.2 cm) rectangle. This is the venting cutout area.
11. Cut a 3/4" (19 mm) hole in one corner of the cutout area.
12. Using a keyhole saw, cut out the venting cutout area.

Drill Holes in Rear Wall

In addition to being installed on at least 1 wall stud, the mounting plate must attach to the wall at all 4 corner holes. If the holes are not over wall studs, use four 1/4-20 x 3" round-head bolts with toggle nuts; if 2 holes are over wall studs, use 2 each of lag screws and 1/4-20 x 3" round-head bolts with toggle nuts; or if all 4 holes are over wall studs, use 4 lag screws. Following are 3 installation configurations.

Installation for No Wall Studs at Corner Holes (Figures 1 & 2)

1. Drill 3/4" (19 mm) holes through the wall at all 4 corner holes marked in Step 3 of "Mark Rear Wall."
2. Drill 3/16" (5 mm) hole(s) into the wall stud(s) at the hole(s) marked in Step 4 of "Mark Rear Wall." Refer to figures 1 and 2 in "Possible Wall Stud Configurations" in "Locate Wall Stud(s)" section.

Installation for One Wall Stud at Two Corner Holes (Figure 3)

1. Drill 3/16" (5 mm) holes into the wall stud at the 2 corner holes marked in Step 3 of "Mark Rear Wall."
2. If installing on a second wall stud, drill 3/16" (5 mm) hole(s) into the wall stud at the holes marked in Step 4 of "Mark Rear Wall." Refer to Figure 3 in "Possible Wall Stud Configurations." in "Locate Wall Stud(s)" section.
3. Drill 3/4" (19 mm) holes through the wall at the other 2 corner holes.

Installation for Wall Studs at All Four Corner Holes (Figure 4)

1. Drill 3/16" (5 mm) holes into the studs at the 4 corner holes marked in Step 3 of "Mark Rear Wall."

Attach Mounting Plate to Wall

NOTE: Secure the mounting plate to the wall at all 4 corner holes drilled into the wall studs and/or drywall using either 1/4-20 x 3" round-head bolts and toggle nuts or 1/4 x 2" lag screws.

Refer to illustrations in "Possible Wall Stud Configurations" in "Locate Wall Stud(s)" section.

No Wall Studs at Corner Holes (Figures 1 & 2)

NOTE: The mounting plate must also be secured to the wall on at least 1 wall stud as well as at all 4 corners.

1. With the support tabs of the mounting plate facing forward, insert 1/4-20 x 3" round-head bolts through all 4 corner holes of mounting plate.
2. Start toggle nuts on bolts from the back of the mounting plate. Leave enough space for the toggle nuts to go through the wall and open.

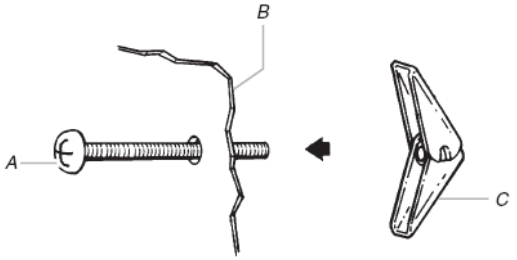

A. 1/4-20 x 3" round-head bolt
B. Mounting plate
C. Spring toggle nut

3. Position mounting plate on the wall, making sure that the top of the mounting plate is aligned with the front edge of the upper cabinet.
4. Push the 4 bolts with toggle nuts through the drywall, and finger tighten the bolts to make sure toggle nuts have opened against drywall.

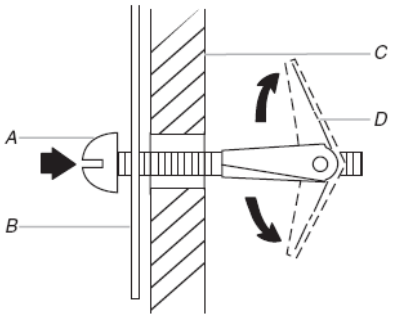

A. 1/4-20 x 3" round-head bolt
B. Mounting plate
C. Drywall
D. Spring toggle nut

5. Insert lag screw(s) into the holes drilled into wall stud(s) in Step 2 of "Installation for No Wall Studs at Corner Holes" in the "Drill Holes in Rear Wall" section.
6. Check alignment of mounting plate, making sure it is level.
7. Securely tighten all lag screws and bolts.

One Wall Stud at Two Corner Holes (Figure 3)

1. With the support tabs of the mounting plate facing forward, insert 1/4-20 x 3" round-head bolts through the 2 corner holes that fit over the two 3/4" (19 mm) holes drilled in Step 2 of "Installation for One Wall Stud at Two Corner Holes" in the "Drill Holes in Rear Wall" section.
2. Start toggle nuts on the bolts from the back of the mounting plate. Leave enough space for the toggle nut to go through the wall and to open.
3. Position mounting plate on the wall, making sure that the top of the mounting plate is aligned with the front edge of the upper cabinet.
4. Push the 2 bolts with toggle nuts through the drywall, and finger tighten the bolts to make sure toggle nuts have opened against drywall.
5. Insert 2 lag screws into the remaining 2 corner holes.
6. If installing on a second wall stud, insert lag screw(s) into the other hole(s) drilled in Step 2 of "Installation for One Wall Stud at Two Corner Holes" in the "Drill Holes in Rear Wall" section.
7. Check alignment of mounting plate, making sure it is level.
8. Securely tighten all lag screws and bolts.

Wall Studs at All Four Corner Holes (Figure 4)

1. Position mounting plate on the wall, making sure that the top of the mounting plate is aligned with the front edge of the upper cabinet.
2. Insert lag screws into the 4 corner holes.
3. Check alignment of mounting plate, making sure it is level.
4. Securely tighten all lag screws.

Prepare Upper Cabinet

1. Disconnect power to outlet.
2. Remove all contents from upper cabinet.
3. Place Upper Cabinet Template against the bottom of the upper cabinet, and attach with tape or thumbtacks. Make sure the template centerline aligns with the vertical centerline on the rear wall.

   The "rear wall" arrows must be against the rear wall so that the holes cut into the upper cabinet align with the holes in the top of the microwave oven.

NOTE: If the upper cabinet has a frame around it, trim the template edges so that it fits inside the frame, against the upper cabinet bottom. The template has trim lines to use as guides.

4. Make sure the 10 7/16" (26.5 cm) dimension from the rear wall to points "D" and "E" on the template is maintained.

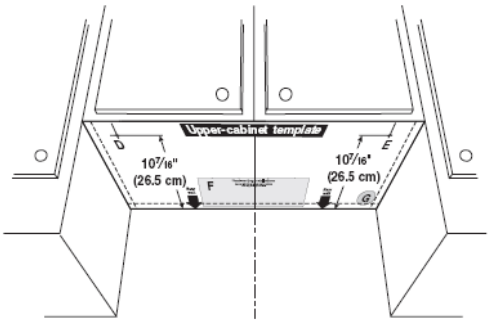

5. Cut the 1½" (3.8 cm) diameter hole at the circular shaded area "G" on the template. This hole is for the power supply cord.

NOTE: If upper cabinet is metal, the supply cord bushing needs to be installed around the supply cord hole, as shown.

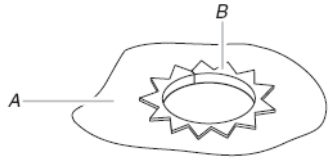

A. Metal cabinet
B. Power supply cord bushing

6. Drill 3/8" (10 mm) holes at points "D" and "E" on the template. These are for two 1/4-20 x 3" round-head bolts and washers used to secure the microwave oven to the upper cabinet.

For Roof Venting Installation Only

7. Cut 3/4" (19 mm) hole at one corner of the shaded rectangular area "F" on Upper Cabinet Template.
8. Using a keyhole saw, cut out the rectangular area.

Install Damper Assembly

(for wall venting only)

1. Check that damper blade moves freely, and opens fully.
2. Position the damper assembly on the back of the microwave oven so that the damper blade opens away from the microwave oven.

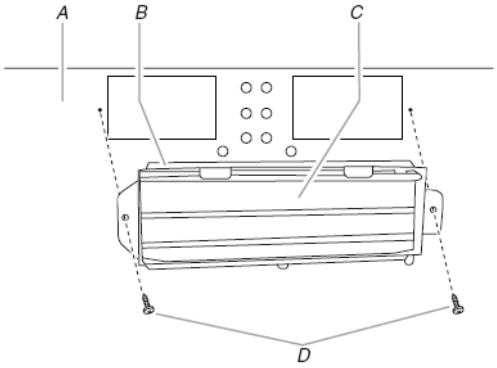

A. Back of microwave oven
B. Damper assembly
C. Damper blade
D. Sheet metal screws

3. Secure damper assembly with 2 sheet metal screws.

Install the Microwave Oven

⚠WARNING

Excessive Weight Hazard

Use two or more people to move and install microwave oven.

Failure to do so can result in back or other injury.

IMPORTANT: The control side of the unit is the heavy side. Handle the microwave oven gently.

1. Place a washer on each 1/4-20 x 3" bolt and place inside upper cabinet near the 3/8" (10 mm) holes.
2. Make sure the microwave oven door is closed and taped shut.

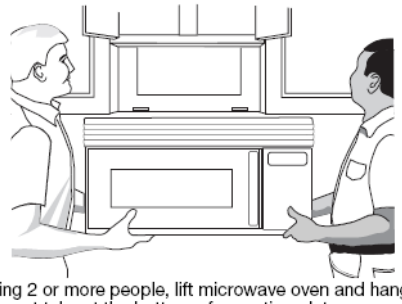

3. Using 2 or more people, lift microwave oven and hang it on support tabs at the bottom of mounting plate.

NOTE: Do not grip or use the door or door handle during installation.

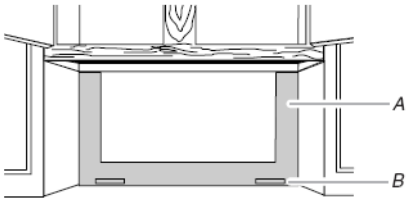

A. Mounting plate
B. Support tabs

4. With front of microwave oven still tilted, thread power supply cord through the power supply cord hole in the bottom of the upper cabinet.

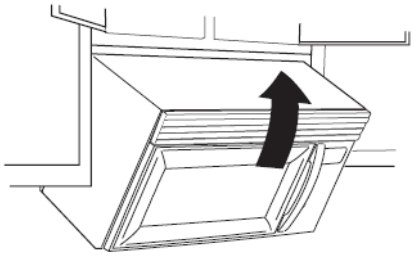

5. Rotate microwave oven up toward upper cabinet.

NOTE: If venting through the wall, make sure the damper assembly fits easily into the vent tube in the wall cutout.

6. Push microwave oven against mounting plate and hold in place.

NOTE: If microwave oven does not need to be adjusted, skip steps 7-9.

7. If adjustment is required, rotate microwave oven downward. Using 2 or more people, lift microwave oven off of mounting plate, and set aside on a protected surface.
8. Loosen mounting plate screws. Adjust mounting plate and retighten screws.
9. Repeat steps 3-6.
10. With the microwave oven centered, and with at least one person holding it in place, insert bolts through upper cabinet into microwave oven. Tighten bolts until there is no gap between upper cabinet and microwave oven.

NOTES:

- Some upper cabinets may require bolts longer or shorter than 3" (7.6 cm). Longer or shorter bolts are available at most hardware stores.
- Overtightening bolts may warp the top of the microwave oven. To avoid warping, wood filler blocks may be added. The blocks must be the same thickness as the space between the upper cabinet bottom and the microwave oven.

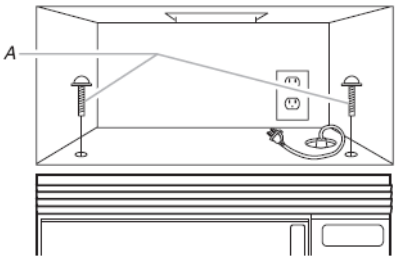

A. Bolts

For Roof Venting Installation Only

1. Insert damper assembly through the cabinet cutout so that the long tab of the damper assembly slides into the raised slot of the damper plate. Then secure with sheet metal screw.

NOTE: The screw cannot be installed if the damper assembly is not positioned as shown.

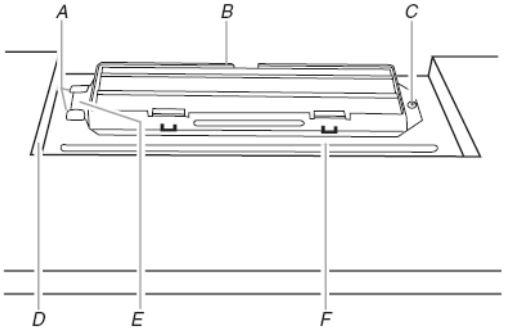

A. Raised tabs
B. Damper assembly
C. Sheet metal screw
D. Upper cabinet cutout
E. Long tab
F. Damper plate

2. Connect vent to damper assembly.

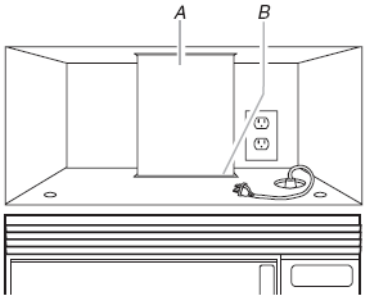

A. Vent
B. Damper assembly (under vent)

Complete Installation

1. Refer to the Use and Care Guide for instructions on how to install filters into your model.

⚠WARNING

Electrical Shock Hazard

Plug into a grounded 3 prong outlet.

Do not remove ground prong.

Do not use an adapter.

Do not use an extension cord.

Failure to follow these instructions can result in death, fire, or electrical shock.

2. Plug microwave oven into grounded 3 prong outlet.
3. Reconnect power.
4. Check the operation of microwave oven by placing 1 cup (250 mL) of water on the turntable, and programming a cook time of 1 minute at 100% power. Test vent fan and exhaust by operating the vent fan.
5. If the microwave oven does not operate:
   - Check that a household fuse has not blown, or that a circuit breaker has not tripped. Replace the fuse or reset the circuit breaker. If the problem continues, call an electrician.
   - Check that the power supply cord is plugged into a grounded 3 prong outlet.
   - See the Use and Care Guide for troubleshooting information.

Installation is now complete.

Save Installation Instructions for future use.

VENTING DESIGN SPECIFICATIONS

This section is intended for architectural designer and builder/ contractor reference only.

NOTES:

- Vent materials needed for installation are not provided with microwave hood.
- We do not recommend using a flexible metal vent.
- To avoid possible product damage, be sure to vent air outside, unless using recirculation installation. Do not vent exhaust air into concealed spaces, such as spaces within walls or ceilings, attics, crawl spaces or garages.

For optimal venting installation, we recommend:

- using roof or wall caps that have back draft dampers
- using a rigid metal vent
- using the most direct route by minimizing the length of the vent and number of elbows to provide efficient performance
- using uniformly sized vents
- using duct tape to seal all joints in the vent system
- using caulking compound to seal exterior wall or roof opening around cap
- not installing 2 elbows together, for optimal hood performance

If venting through the wall, be sure that there is proper clearance within the wall for the damper to open fully.

If venting through the roof, and rectangular to round transition is used, be sure there is at least 3" (7.6 cm) of clearance between the top of the microwave oven and the transition piece. See "Rectangular to Round Transition" illustration.

Roof venting

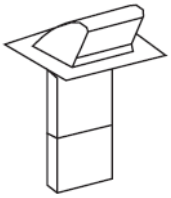

Roof cap

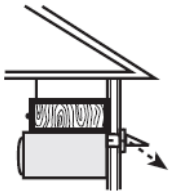

Wall venting

Wall cap

Rectangular to Round Transition

NOTE: The minimum 3" (7.6 cm) clearance must exist between the top of the microwave oven and the rectangular to round transition piece so that the damper can open freely and fully.

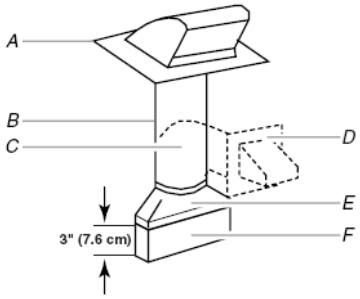

A. Roof cap
B. 6" (15.2 cm) min. diameter round vent
C. Elbow (for wall venting only)
D. Wall cap
E. 3¼" x 10" to 6" (8.3 x 25.4 cm to 15.2 cm) rectangular to round transition piece
F. Vent extension piece, at least 3" (7.6 cm) high

Recommended Standard Fittings

The following length equivalents are for use when figuring vent length. See the examples in "Recommended Vent Length."

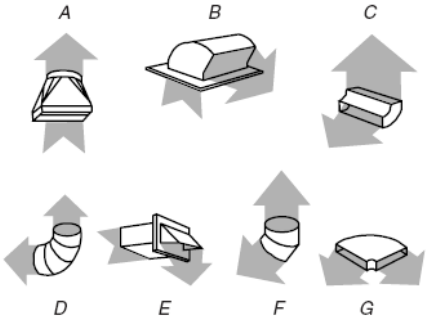

A. Rectangular to round transition piece: 3¼" x 10" to 6" = 5 ft (8.3 x 25.4 cm to 15.2 cm = 1.5 m)
B. Roof cap: 3¼" x 10" = 24 ft (8.3 x 25.4 cm = 7.3 m)
C. 90° elbow: 3¼" x 10" = 25 ft (8.3 x 25.4 cm = 7.6 m)
D. 90° elbow: 6" = 10 ft (15.2 cm = 3 m)
E. Wall cap: 3¼" x 10" = 40 ft (8.3 x 25.4 cm = 12.2 m)
F. 45° elbow: 6" = 5 ft (15.2 cm = 1.5 m)
G. 90° flat elbow: 3¼" x 10" = 10 ft (8.3 x 25.4 cm = 3 m)

Recommended Vent Length

A 3¼" x 10" (8.3 x 25.4 cm) rectangular or 6" (15.2 cm) round vent should be used.

The total length of the vent system including straight vent, elbow(s), transitions and wall or roof caps must not exceed the equivalent of 140 ft (42.7 m) for either type of vent. See "Recommended Standard Fittings" section for equivalent lengths.

For best performance, use no more than three 90° elbows.

To calculate the length of the system you need, add the equivalent lengths of each vent piece used in the system. See the following examples:

3¼" x 10" (8.3 x 25.4 cm) vent system = 73 ft (22.2 m) total

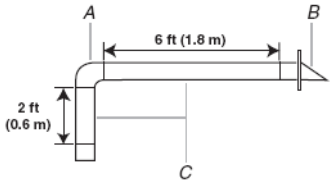

A. One 3¼" x 10" (8.3 x 25.4 cm) 90° elbow = 25 ft (7.6 m)
B. 1 wall cap = 40 ft (12.2 m)
C. 2 ft (0.6 m) + 6 ft (1.8 m) straight = 8 ft (2.4 m)

6" (15.2 cm) vent system = 73 ft (22.2 m) total

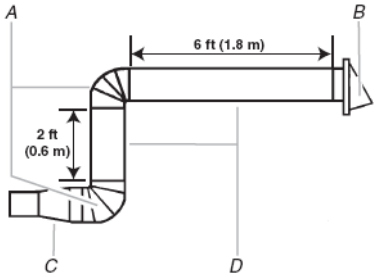

A. Two 90° elbows = 20 ft (6.1 m)
B. 1 wall cap = 40 ft (12.2 m)
C. 1 rectangular to round transition piece = 5 ft (1.5 m)
D. 2 ft (0.6 m) + 6 ft (1.8 m) straight = 8 ft (2.4 m)

If the existing vent is round, a rectangular to round transition piece must be used. In addition, a rectangular 3" (7.6 cm) extension vent between the damper assembly and rectangular to round transition piece must be installed to keep the damper from sticking.

ASSISTANCE

Call your authorized dealer or service center. When you call, you will need the microwave oven model number and serial number. Both numbers can be found on the model and serial number plate, which is located behind the microwave oven door on the front frame of the microwave oven.

If you need additional assistance, call us at our toll free number listed in the Use and Care Guide, or visit us on the Web.

Replacement Parts

If any of the installation hardware needs to be replaced, call us at our toll free number listed in the Use and Care Guide, and reference the appropriate part number listed here.

Damper Assembly
Part Number 8206556

Mounting Plate
Part Number 8206315

Upper Cabinet Template
Part Number 8205924

Mounting Screw Kit (includes parts A-F in "Parts Supplied" section)
Part Number 8206554

Accessories

Filler Panel Kits are available from your dealer to use when installing this microwave oven in a 36" (91.4 cm) or 42" (106.7 cm) wide opening. The filler panels come in pairs. Each panel is 3" (7.6 cm) wide.

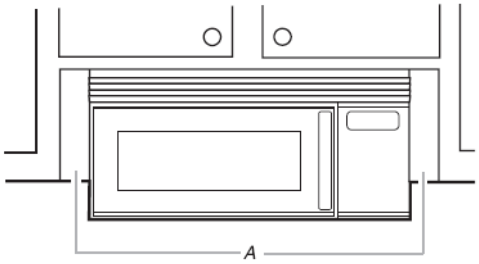

A. Filler panels

Filler Panel Kit Number	8171336	White
	8171337	Black
	8171338	Biscuit
	8171339	Stainless Steel
	99403	Almond

See your authorized dealer or service center for details.

8206327

4619-656-03054
3/06
Printed in China

11 31 23 Residential Laundry Appliances

11 31 23.03 Clothes Washer

Overview:

- The clothes washer was based off of Whirlpool Model GHW9400P
- Do not run hot water line
- Remove electric resistance heater
- Supply CO_2 air-source heat pump to heat water
- The original data sheets are included at the end of this section for reference

Description of Heat Pump Water Heater:

The Clothes Washer will be provided with its own, single-pass heat pump water heater to sit directly behind appliance. A wash cycle will begin by turning on the heat pump water heater and allowing the washer to fill at a lower rate than normal. The “normal” wash cycle will then be engaged.

Airflow over Evaporator will be supplied by the fan and housing assembly a Whirlpool ACD052PS Window Unit Air Conditioner.

Refrigeration Circuit of CO_2 Water Heater:

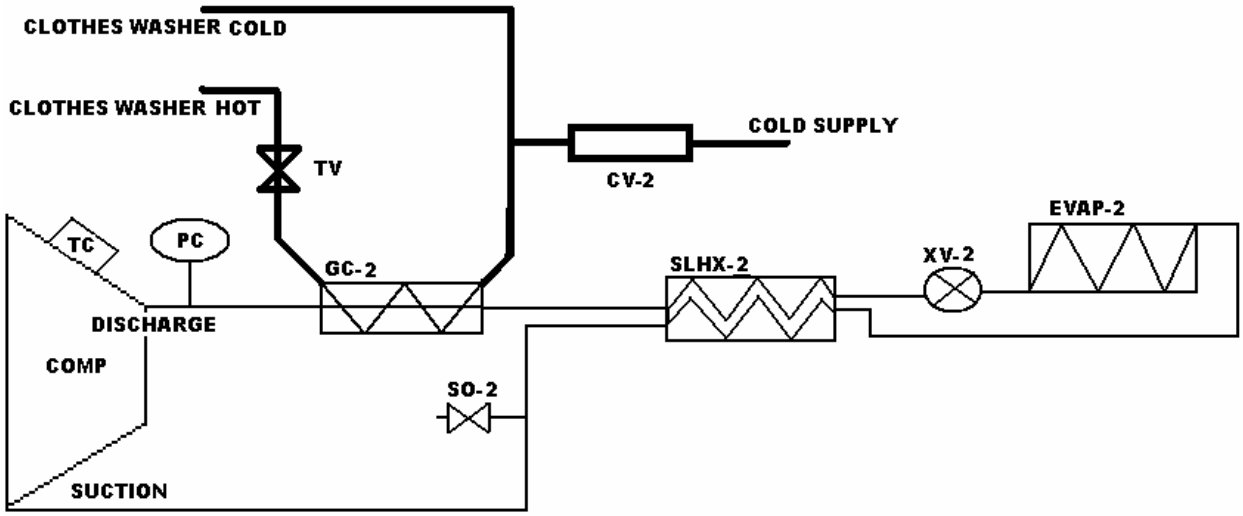

Table of Components:

Item	Description	Physical Characteristics	Safe Working Pressure / Temperature at which SWP applies	Source of Data
Piping to connect components and TXV pressure line	1/4" Copper Tube	OD = 1/4" ID = 0.12"	3220 PSI / 70 °F 0.8 Temperature Derate factor for 200 °F => 2576 PSI	www.mcmaster.com Product Number 8955K231
T, Reducer, Union-Cross and Elbow where open flame is permissible.	Forged Pipe fittings with BCuP-2, 3, 4 or 5 brazing copper to copper and 54% silver for copper to steel.	Melting Ranges within 1300 °F and 1550 °F	Meet or exceed tube strength	http://www.copper.org/resources/pub_list/pdf/copper_tube_handbook.pdf
T, Reducer, Union-Cross and Elbow where open flame is permissible.	Swagelok compression fittings (3/8"-1/4" reducer union, 3/8"-3/8" union, elbow and cross union)	ID = 3/8" ID = 1/4"	2800 PSI / 200 °F	http://www.swagelok.com/downloads/webcatalogs/EN/MS-01-107.PDF
GC-2	Custom Tube-in-Tube Heat Exchanger	****	2576 PSI / 200 °F	www.mcmaster.com Product Number 8955K231
Compressor	Danfoss CO_2 compressor. Model Number TN1416 MBP	2600 kW capcity	1740 PSI	See Below
PC	Swagelok Relief Valve Product no. SS-4R3A	ID = 1/4" ID = 1/4"	50-6000 psi set pressure. Set to 1500 PSI	http://www.swagelok.com/search/product_detail.aspx?part=SS-4R3A
TC	Temperature cutoff switch. Integral to compressor.	N/A	N/A	N/A
SLHX-2	Two 17 ft. Lengths of 1/4" copper tube soldered together and insulated.	OD = 1/4" ID = 0.12"	3220 PSI / 70 °F 0.8 Temperature Derate factor for 200 °F => 2576 PSI	www.mcmaster.com Product Number 8955K231
SO-2	Swagelok Shutoff Valve Product Number SS-43S4	ID = 1/4" ID = 1/4"	1500 PSI	www.swagelok.com
XV-2	Swagelok Metering Valve Product Number SS-31RS4-G	ID = 1/4" ID = 1/4"	5000 PSI	www.swagelok.com
EVAP-2	Modine CO_2 Evaporator	Special Fittings	**	**
CV-2	Check Valve	1" FPT 1" FPT	N/A	N/A

NOTE: Refrigerant-to-water heat exchangers for the dishwasher and clothes washer will be constructed by using the Swagelok fittings indicated to assemble a tube-in-tube setup that consists of a flexible PVC tube surrounding the ¼" pressure rated copper pipe. The PVC tube will be braided-reinforced and be temperature rated up to 200°F (McMaster part number 55425K33). The portion of ¼" copper surrounded by the flexible tube will contain no fittings of any sort to minimize risk of water contamination. If Modine is able to supply our team with more of its specialized CO_2 refrigerant-to-water heat exchangers, these will be substituted. See illustration:

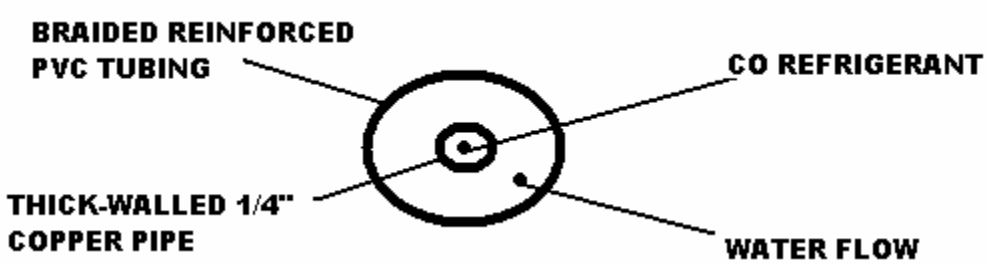

The datasheet of the clothes washer is given on the following page.

Whirlpool® Washer

PRODUCT MODEL NUMBERS

WFW9400S

Electrical: 120-volt, 60 Hz, AC-only, 15 or 20 amp fused electrical supply. A time-delay fuse or circuit breaker and separate circuit is recommended.

OVERALL DIMENSIONS

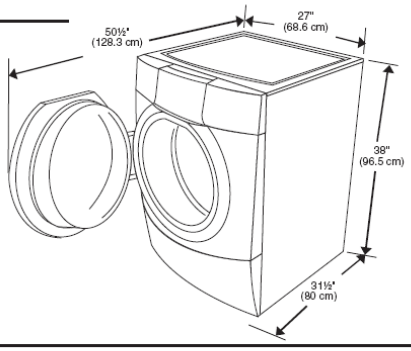

RECESSED AREA AND CLOSET INSTALLATIONS

For closet installation, with a door, the minimum ventilation openings in the top and bottom of the door are required (view 2). Louvered doors with equivalent air ventilation openings in the top and bottom are acceptable.

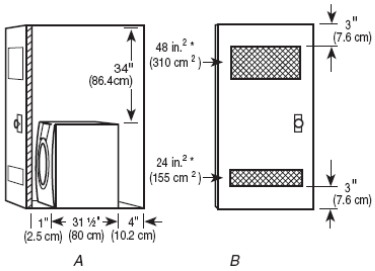

A. Side view - closet or confined area
B. Closet door with vents

Washer on Pedestal

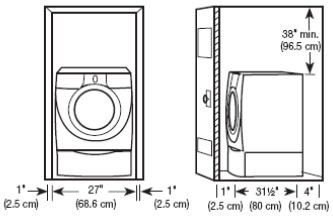

Recommended installation spacing for cabinet installation

For cabinet installation, with a door, the minimum ventilation openings in the top are required.

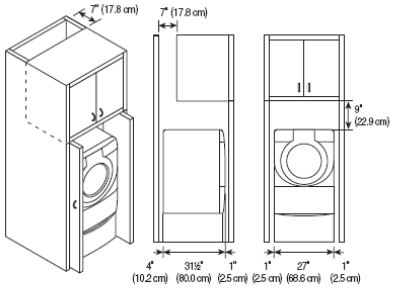

UNDERCOUNTER INSTALLATION

Dimensions shown are the recommended spacing.

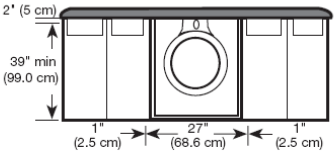

Stacked Washer and Dryer

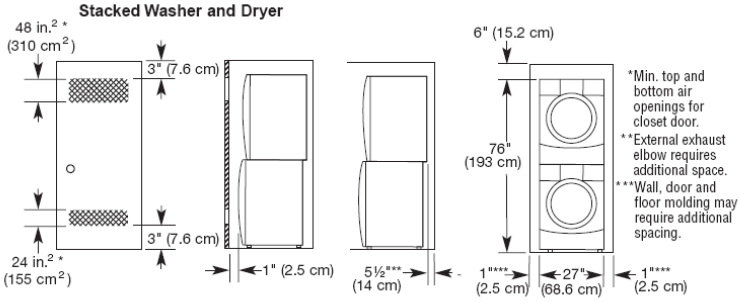

*Min. top and bottom air openings for closet door.
**External exhaust elbow requires additional space.
***Wall, door and floor molding may require additional spacing.

DRAIN SYSTEM OPTIONS

Standpipe drain system - wall or floor (view 1 & 2)
The standpipe drain requires a minimum diameter standpipe of 2″ (5 cm). The minimum carry-away capacity can be no less than 17 gal. (64 L) per minute.

The top of the standpipe must be at least 30″ (76.2 cm) high and no higher than 96 in. (2.4 m) from the bottom of the washer.

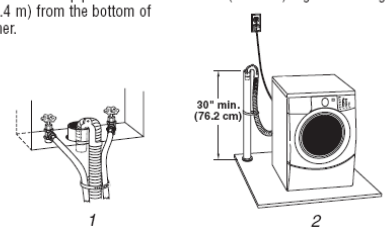

1 2

Laundry tub drain system (view 1)
The laundry tub needs a minimum 20 gal. (76 L) capacity. The top of the laundry tub must be at least 30″ (76.2 cm) above the floor.

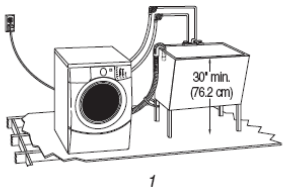

1

Floor drain system (view 2)
The floor drain system requires a siphon break that may be purchased separately.

The siphon break must be a minimum of 28″ (71 cm) from the bottom of the washer. Additional hoses might be needed.

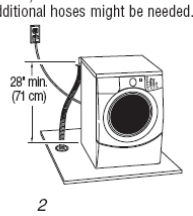

2

Because Whirlpool Corporation policy includes a continuous commitment to improve our products, we reserve the right to change materials and specifications without notice.

Dimensions are for planning purposes only. For complete details, see Installation Instructions packed with product. Specifications subject to change without notice.

Ref. 8183091
12-14-06

11 31 23.05 Clothes Dryer

Overview:

- Whirlpool Model GEW9250P
- Datasheet is include on next page.
- No modifications will take place.

Electronic Electric Dryer

PRODUCT MODEL NUMBERS

WED9200S
WED9400S

Electrical: This dryer requires a 3 or 4 wire, single phase, 120/240 volt, 60 Hz., AC only electrical supply (or 3 or 4 wire, 120/208 volt electrical supply, if specified on the serial/rating plate) on a separate 30-amp circuit, fused on both sides of the line. A time-delay fuse or circuit breaker is recommended. Connect to an individual branch circuit. Do not have a fuse in the neutral or grounding circuit.

Exhaust venting: Exhaust your dryer to the outside. Four inch diameter vent is required. Rigid or flexible metal exhaust vent must be used. Do not use plastic or metal foil vent. Exhaust outlet hood must be at least 12 inches from the ground or any object that may be in the path of the exhaust.

OVERALL DIMENSIONS

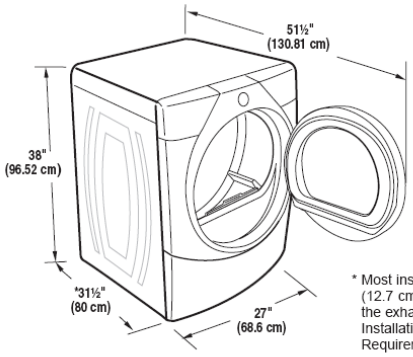

* Most installations require a minimum 5" (12.7 cm) clearance behind the dryer for the exhaust vent with elbow. See Installations Instructions, "Venting Requirements."

UNDERCOUNTER INSTALLATION

Dimensions shown are for minimum spacing.

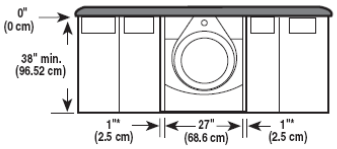

*Required spacing

RECESSED AREA AND CLOSET INSTALLATION

For closet installation, with a door, the minimum ventilation openings in the top and bottom of the door are required. Louvered doors with equivalent air ventilation openings in the top and bottom are acceptable.

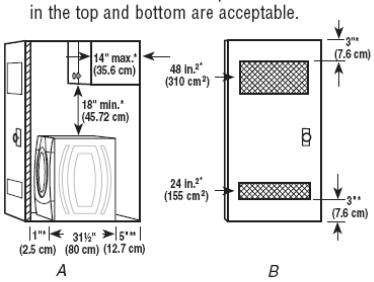

A. Side view - closet or confined area
B. Closet door with vents

**Side or bottom venting, 0" (0 cm) spacing is allowed.

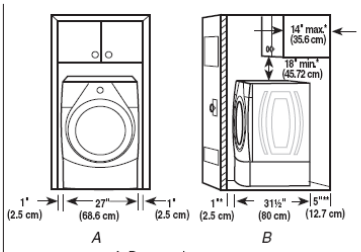

A. Recessed area
B. Side view - closet or confined area

*Required spacing

**For side or bottom venting, 0" (0 cm) spacing is allowed.

EXHAUST VENTING

Recommended hood styles

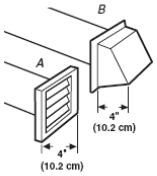

Angled hood style is acceptable.

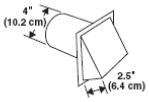

A. Louvered hood style
B. Box hood style

Number of 90° turns or elbows	Type of vent	Box or Louvered hoods	Angled hoods
0	**Rigid metal** **Flexible metal**	64 ft (20 m) 36 ft (11 m)	58 ft (17.7 m) 28 ft (8.5 m)
1	**Rigid metal** **Flexible metal**	54 ft (16.5 m) 31 ft (9.4 m)	48 ft (14.6 m) 23 ft (7 m)
2	**Rigid metal** **Flexible metal**	44 ft (13.4 m) 27 ft (8.2 m)	38 ft (11.6 m) 19 ft (5.8 m)
3	**Rigid metal** **Flexible metal**	35 ft (10.7 m) 25 ft (7.6 m)	29 ft (8.8 m) 17 ft (5.2 m)
4	**Rigid metal** **Flexible metal**	27 ft (8.2 m) 23 ft (7 m)	21 ft (6.4 m) 15 ft (4.6 m)

NOTE: Side and bottom exhaust installations have a 90° turn inside the dryer. To determine maximum exhaust length, add one 90° turn to the chart.

Dryer only

Dryer on pedestal

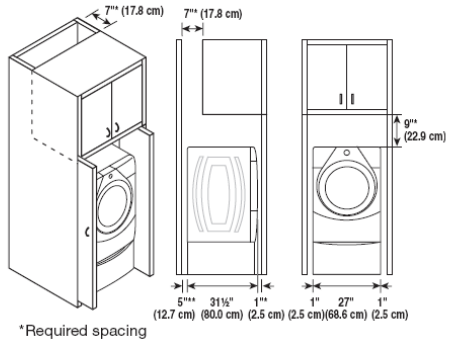

Recommended installation spacing for cabinet installation

For cabinet installation, with a door, the minimum ventilation openings in the top are required.

*Required spacing

**For side or bottom venting, 0" (0 cm) spacing is allowed.

Select the route that will provide the straightest and most direct path outdoors. Plan the installation to use the fewest number of elbows and turns. Use the fewest 90° turns possible.

Do not use vent runs longer than specified in vent length chart.

Determine the number of elbows you will need.

Because Whirlpool Corporation policy includes a continuous commitment to improve our products, we reserve the right to change materials and specifications without notice.

Dimensions are for planning purposes only. For complete details, see Installation Instructions packed with product. Specifications subject to change without notice.

Ref. W10110850A
12-13-06

12 00 00 FURNISHINGS

12 50 00 FURNITURE

12 58 00 RESIDENTIAL FURNITURE

12 58 16 Residential Chairs

The desk chair, the Mirra Chair, was designed by Jerome Caruso, a UIUC alumnus, and is produced by Herman Miller, a company that believes environmental advocacy is part of our heritage and a responsibility they gladly bear for future generations. The Mirra Chair was awarded a Gold Cradle to Cradle certification by (McDonough Braungart Design Chemistry) MBDC.

- The Mirra chair is up to 96% recyclable at the end of its useful life.
- The Mirra is composed of 42% recycled materials.

More details can be found on the following pages.

HermanMiller for Business

Worldwide > United States > for Business

Products Services Research|Design About Us

Site Search

Mirra Chairs

Designed by Studio 7.5

[E-mail Page] [Print Page]

Photos

Mirra is an innovative blend of passive and active adjustments that provides a new reference point in performance, aesthetics, and value. Mirra automatically shapes itself to each user, while a few simple adjustments fine-tune the fit and feel. The chair's next-generation innovations, including the upholstered backrest, all work together in a fresh-looking chair that's easy to use.

Total Back Support
No adjustment needed. The pliable, elastic TriFlex back supports the entire spine and conforms to size, posture, and movements.

Passive PostureFit performance. A camber shape at the base of the back gives healthful, comfortable support to the lower back below the beltline.

A Balanced Ride
Easy motion. The Harmonic tilt creates pivot points at the hip, knee, and ankle to allow easy and natural movement.

Advanced spring technology. Users of all sizes feel equal resistance while moving anywhere in the wide tilt range; the sitter is always in control.

Custom Seat Comfort
AireWeave suspension. This elastomeric suspension seat follows the contours of the body, distributes pressure evenly, and provides aeration.

FlexFront seat edge. The sitter adjusts the seat depth without moving the seat pan; there's never a gap between the seat and backrest.

Aesthetic Appeal
Innovative look. Mirra has a clean, light-scaled design that reveals the chair's features and function.

Colorful choices. The backrest and seat suspension come in a range of colors that mix or match to complement interiors and other furniture.

Traditional touch. The back can be upholstered in foam-free Latitude fabric without adding bulk to the trim profile; Latitude is breathable and maintains the total support of the TriFlex back.

Earth Friendly
Sustainable design. Mirra is made of a minimal number of parts and is easily disassembled for recycling; the recycled content is high, and it's 96 percent recyclable.

Recylable fabric. Latitude back upholstery is 100 percent recyclable.

Design Story

To create the Mirra chair, Herman Miller teamed with Studio 7.5, a German design firm.

Composed of five designers--Claudia Plikat, Burkhard Schmitz, Nicolai Neubert, Carola Zwick, and Roland Zwick--Studio 7.5 has been involved for over 10 years in the design and development of products that improve the way people work.

Product Showroom

Products by Name
- Seating
- Systems Furniture
- Freestanding Furniture
- Accessories: The Be Collection

Products by Designer
- Select designer...

Products by Application
- Select application...

Planning and Visualization

Color, Materials, Finishes

Pricing Information

Find a dealer

Select a state or enter a zip code to find a business dealer that trades in your area.

State
or
Zip Code

Learn, Play, Browse

Mirra Experience
This movie portrays Mirra's natural moves, effortless support, easy adjustments. There's more to learn here about this really smart chair. (Requires Flash)

Brochure
Download Mirra chairs product literature. (369KB PDF).

Environmental Information

Information is provided in PDF format.

Environmental Product Summary

LEED Credit Summaries
Commercial Interiors (CI)
New Construction (NC)
Existing Buildings (EB)

Learn more about Herman Miller and the environment.

Pricing Information

U.S. list prices are provided in PDF format.

They consider themselves 'the grandchildren of the Eameses' and, like those pioneering designers, they are experts at observing how workers interact with their environments and finding ways to make that interaction more natural. Sharing a genuine passion for seating, they know seating as a science and work to bring it to another level.

Rather than relying on any individual in the firm, Studio 7.5 works as a team, without titles or hierarchy. The Mirra chair is a product of their collective imagination, talent, and persistence--along with a willingness to break the mold in order to create a chair that sets a new standard for comfort, fit, balanced ride, and visual refinement in its price range.

Studio 7.5 envisioned a chair that reacts to what people do. Part of the concept was to make the chair like a second skin, like a shadow of the sitter.

From this concept, Mirra's passive adjustability was born. From the TriFlex back to the AireWeave seat suspension to the Harmonic tilt, Mirra does just what Studio 7.5 worked to achieve: Just sit on it, and it fits. There are only a few adjustment controls, and they are designed to be very intuitive.

Mirra features common materials applied in original ways--such as the elastomeric seat suspension and molded polymer back that are used instead of foam and fabric. The relationship between materials and technology was optimized to achieve maximum performance with minimal materials.

User testing, benchmarking, focus groups, tilt performance studies, and other methods were used to ensure the chair meets customer needs and provides advanced ergonomic performance. For example, research over the years has shown that the biggest concern users have is back support. In fact, back issues account for the second highest number of work illnesses. The designers took this to heart and focused on the back as an area of differentiation.

Herman Miller and Studio 7.5 also used results from the Civilian American and European Surface Anthropometry Resource (CAESAR) study, which surveyed body measurements of people aged 18-65, using the latest 3-D technology. Data from the study--the first full-body, 3-D surface anthropometry survey of the U.S. and Europe--helped ensure the chair fits people from the 5th percentile woman to the 95th percentile man.

Mirra Chairs

View or download pricing information for more Herman Miller products.

User Information

Adjustment Information
View these Quicktime videos to learn about the ergonomic adjustment options available on Mirra chairs. Instructions shown are for all possible adjustments; specific adjustments vary according to chair model.

Seat Height (1.1MB)
Seat Depth (1.3MB)
Tilt Tension (1.2MB)
Arm Height (1.4MB)
Arm Angle (770KB)
Arm Width (1.4MB)
Lumbar (1.7MB)
Forward Tilt (1.1MB)
Tilt Limiter (1MB)

Or download this user adjustment document for a complete explanation of all your chair's bells and whistles.
Mirra chair (428KB PDF)

Care and Maintenance

Mirra Care and Maintenance (22KB PDF)

Workplace Knowledge

The science and research behind the Mirra chair.

The Art of Pressure Distribution (165KB PDF)

Supporting the Spine When Seated (248KB PDF)

Supporting the Biomechanics of Movement (77KB PDF)

The Evolution of Anthropometrics and User Control (128KB PDF)

The Attributes of Thermal Comfort (76KB PDF)

Research Summaries

Body Support in the Office: Sitting, Seating, and Low Back Pains (846KB PDF)

Everybody Deserves a Good Chair (162KB PDF)

Case Studies

See how customers have used this product in our Case Study Library.

News Stories

Herman Miller for the Home Stages Revival of the Classics at ICFF 2005
May 06, 2005

Mirra Chair an IDEA Award Winner
June 25, 2004

Herman Miller Introduces the

Upholstered Mirra Chair
March 22, 2004

Mirra Chair, M Collection Earn International Design Award
January 31, 2004

Mirra Chair Named among Top 10 Green Building Products
November 13, 2003

Mirra Draws Major Media Interest
July 28, 2003

Herman Miller's Mirra Work Chair Receives "Best of NeoCon" 2003 Gold Award
June 16, 2003

Herman Miller Introduces the Mirra Work Chair
June 11, 2003

Herman Miller's environmental advocacy is long-standing and comprehensive. Since the 1950s, we have been, in the words of founder D.J. De Pree, "stewards of the environment." Today over 400 employees play a direct role in the work of 9 different environmental groups engaged in efforts from improving air quality and reducing waste to green energy, LEED certification, and design for the environment.

Environmental Product Summary

MIRRA® CHAIR

Design Story: The Art and Science of Seating

The Mirra chair extends both the performance and aesthetics of ergonomic work seating to new levels. Introduced in 2003, Mirra resulted from years of careful research into fit, ride, tilt mechanisms, materials, aeration, adjustments, and design for the environment

The German firm Studio 7.5 designed Mirra, determined to create a chair that as much as possible mimicked the motions of a human body at work. Mirra's organic look, feel, and material content reflect the designers' dedication to advancing both the art and science of seating.

Herman Miller's Design Protocol

Our commitment to corporate sustainability naturally includes minimizing the environmental impact of each of our products. Our Design for the Environment team (DfE) applies environmentally sensitive design standards to both new and existing Herman Miller products, utilizing the McDonough-Braungart Cradle-to-Cradle Protocol.

Cradle-to-Cradle goes beyond regulatory compliance to thoroughly evaluate new product designs in three key areas:

- *Material Chemistry and Safety of Inputs*—What chemicals are in the materials we specify, and are they the safest available?
- *Disassembly*—Can we take products apart at the end of their useful life, to recycle their materials?
- *Recyclability*—Do the materials contain recycled content, and more importantly, can the materials be recycled at the end of the product's useful life?

The Mirra chair is the first office product to be developed from the beginning under the guidance of our DfE team. Bill McDonough believes Mirra represents the most advanced and thorough application of Cradle-to-Cradle principles a furniture maker has ever brought to the market.

Material Content

The Mirra chair's components are constructed from steel, plastic, aluminum, foam, and textile.

The Mirra chair is up to **96 percent recyclable** at the end of its useful life.

Mirra is comprised of **42 percent recycled** materials. The recycled content breaks down by 31 percent post-consumer and 11 percent pre-consumer content.

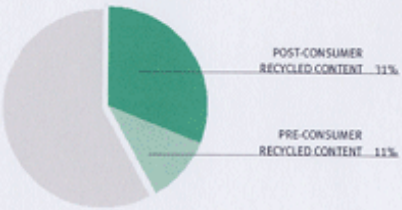

HermanMiller

- Every material has been scrutinized down to the molecular level.
- Steel components can be segregated and returned to the recycling stream as a technical nutrient.
- Most metal components are powder-coated, which eliminates solvents and volatile organic compounds (VOCs) from the finishing process.
- Plastic components are identified with an ASTM recycling code whenever possible, to aid in returning these materials to the recycling stream.
- No polyvinyl chloride (PVC) used; thermoplastic elastimer is used for arm skin.
- Molded polymer back can be recycled up to 25 times.
- Aluminum can be recycled in a closed-loop system similar to steel.
- Foam and textile materials are part of an open-loop system and can be recycled into everything from automotive components to carpet padding at the end of their current life.
- Textiles used in Herman Miller products can be made from natural or synthetic fibers. Several textiles are available with 100 percent recycled content.
- *Returnable/Recyclable Packaging*—Packaging materials include corrugated cardboard and a polyethylene plastic bag; each is part of a closed-loop recycling system, for repeated recycling.
  - –Whenever possible, shipments between Herman Miller and its suppliers include the use of pallets and other returnable packaging to minimize waste.
  - –On large North American orders, disposable packaging can be replaced with reusable shipping blankets.

Manufacturing Process

- *Green Energy and Emissions*—Mirra is manufactured on a production line that utilizes 100 percent green power, 50 percent from wind turbines, and 50 percent from captured landfill off-gassing. No air or water emissions are released in Mirra's production.
- *Waste*—All solid wastes are recycled to the greatest extent possible.
- *Worker Health and Safety*—Herman Miller strives to meet or exceed OSHA standards.
- *ISO*—Mirra is manufactured in West Michigan at an ISO 14001-certified site.

Product Performance

- Easy assembly for cost-efficiency and quick parts replacement.
- Easy disassembly for recyclability.
- Number One design and environmental criteria: Durability.
- Backed up by Herman Miller's 12-year, 24/7 warranty.

Indoor Air Quality

- The Mirra chair is GREENGUARD™ certified as a low-emitting product that meets current indoor air quality standards. GREENGUARD-certified products also meet the emissions requirements of the State of Washington Furniture Systems criteria and the U.S. EPA Procurement Guidelines for Office Furniture.

Corporate Environmental Policy

For more information on Herman Miller's Corporate Environmental Policy and other environmental efforts, see our Environmental Advocacy booklet (link), or visit the "Environment" section of www.HermanMiller.com.

Supplier Support

At Herman Miller, we are committed to working closely with our suppliers to reduce our collective impact on the environment. We not only encourage our suppliers to minimize their operations' environmental impacts, but require they assist us in decreasing our facilities' negative environmental effects, as well.

LEED

Mirra may contribute to LEED credits due to its returnable/reusable packaging, durability, pre-consumer and post-consumer recycled content, and GREENGUARD certification. Depending on project location, Mirra also may qualify to contribute to a LEED Regional Materials credit. Please contact your Herman Miller representative for detailed LEED credit sheets.

It's important to note that no interior furnishings, individually or collectively, can guarantee a specific number of points for LEED certification.

Herman Miller complies with the Federal Trade commission's Part 260 *Guides for the Use of Environmental Marketing Claims.*

HermanMiller

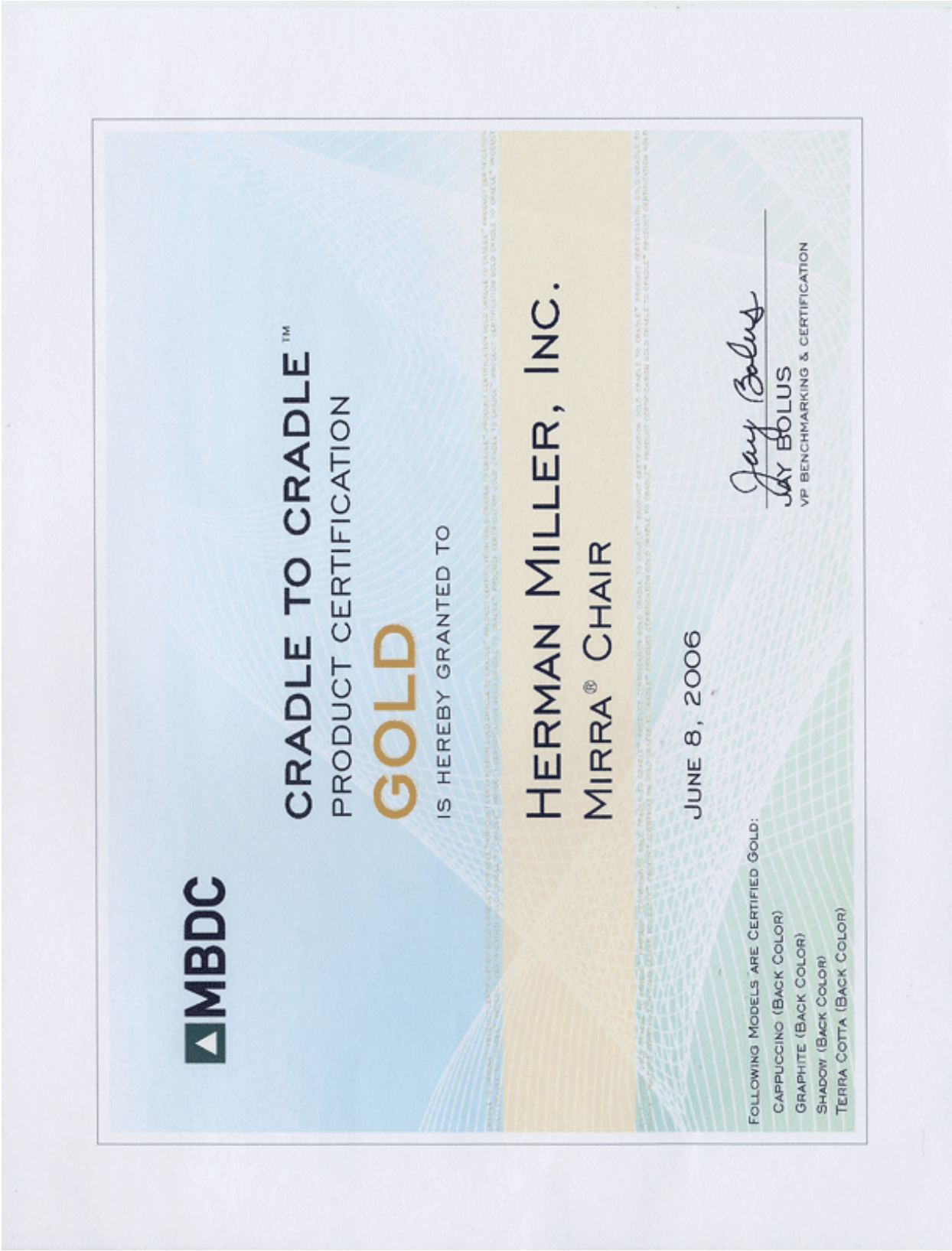

MBDC

CRADLE TO CRADLE™
PRODUCT CERTIFICATION
GOLD
IS HEREBY GRANTED TO

HERMAN MILLER, INC.
MIRRA® CHAIR

JUNE 8, 2006

FOLLOWING MODELS ARE CERTIFIED GOLD:
CAPPUCCINO (BACK COLOR)
GRAPHITE (BACK COLOR)
SHADOW (BACK COLOR)
TERRA COTTA (BACK COLOR)

JAY BOLUS
VP BENCHMARKING & CERTIFICATION

12 58 19 Dining Tables and Chairs

The dining chair, the Caper Chair, was designed by Bill Stumpf, a UIUC alumnus, and is produced by Herman Miller, a company that believes environmental advocacy is part of our heritage and a responsibility they gladly bear for future generations. The Caper Chair was awarded a Silver Cradle to Cradle certification by (McDonough Braungart Design Chemistry) MBDC.

- The Caper chair is up to 100% recyclable at the end of its useful life.
- The Caper is composed of 21% recycled materials.

More details can be found on the following pages.

HermanMiller for Business

Worldwide > United States > for Business

Products Services Research|Design About Us Site Search

Caper Chairs

Designed by Jeff Weber

[E-mail Page] [Print Page]

Photos

Cool, colorful Caper chairs help people quickly and easily come together, move around, move apart--whatever the work requires. Both the multipurpose and stacking models are lightweight and mobile for impromptu change. They are ideal for informal, flexible spaces where reconfiguration is encouraged, smaller scale is important, and budget is a concern.

Universal Design
Multiple uses. One chair provides a variety of solutions--meeting spots, multipurpose rooms, workstation guest seating, drop-in and hoteling workstations, conference rooms, team areas, break-out spaces, and training areas.

Multiple places. Caper works in the office and beyond--retail, hospitality, education, health care, and recreational environments.

Multiple users. One chair fits all kinds of different people as it supports many different work styles.

Lean, Lightweight, Agile
Easy to move: Caper chairs, available with casters or glides, weigh about half as much as competitive models.

Easy on floors. Stacking chairs are available with Floor Saver Glides, ideal for vinyl composition tiles (VCT); the glide pushes dirt out of the way instead of running it over and grinding it into the tile.

Compact size. Uses valuable floor space efficiently.

Ergonomic Support
Healthful comfort. The contoured, flexible seat and back evenly distribute weight, minimize pressure points, and let the user move freely.

Aeration. The seat and back are perforated with small holes to help keep the sitter cool.

Advanced materials. Seats are available with FLEXNET, a strong, breathable suspension material that enhances comfort and distributes weight evenly.

Aesthetics
Light and clean. Fits in without dominating the look or feel of a workspace.

Coordinating design. A visual companion to nontraditional work chairs; its colors and form make Caper an ideal side-chair complement to the Mirra work chair.

Fresh look. Caper's 14 colors energize the workspace; from subtle, sophisticated neutrals to saturated brights; 5 colors match the Mirra chair molded back.

Design Story

Research shows that an increasing number of people are doing more work in places other than their individual offices or workstations. Now people often work in spaces that can be used by a variety of people throughout the day. As a result, increasing demands for comfort, space efficiency, and ergonomic support are being placed on the secondary seating used in places like conference, project, training, and multipurpose rooms.

Product Showroom
Products by Name
- Seating
- Systems Furniture
- Freestanding Furniture
- Accessories: The Be Collection

Products by Designer
- Select designer...

Products by Application
- Select application...

Planning and Visualization

Color, Materials, Finishes

Pricing Information

Find a dealer

Select a state or enter a zip code to find a business dealer that trades in your area.

State
or
Zip Code

Learn, Play, Browse

Brochure
Download Caper product literature. (186KB PDF)

Environmental Information

Information is provided in PDF format.

Environmental Product Summary

LEED Credit Summaries
Commercial Interiors (CI)
New Construction (NC)
Existing Buildings (EB)

Learn more about Herman Miller and the environment.

Pricing Information

U.S. list prices are provided in PDF format.

Caper Chairs

View or download pricing information for more Herman Miller products.

However, chairs often used in these spaces were designed for some other purpose and don't have the required capabilities, including easy mobility, light scale, compact footprint, and simple-to-use adjustments.

To develop a solution for hard-working, multiuse spaces, Herman Miller built on its extensive work chair research base and applied it to secondary seating. The result is Caper chair. It was designed by Jeff Weber, of Stumpf/Weber + Associates, using universal design principles, creating one seating product to accommodate the diversity of people, tasks, and behaviors in a multitude of areas.

Weber says the chair achieves its high level of performance and comfort by "using standard materials in novel ways." It's also delivered with integrity. In keeping with Herman Miller's commitment to environmental responsibility, Caper has a high percentage of post-consumer content and is 100 percent recyclable. And the design requires less energy and material to build and recycle.

The Caper family provides all this at an affordable price. "Too much good design seems expensive," Weber says. "I wanted to break that cliche."

User Information

Download these user adjustment documents for a complete explanation of all your chair's features.
Caper stacking chair (88KB PDF)
Caper Multipurpose chair (162KB PDF)

Care and Maintenance

Finishes Care and Maintenance (98KB PDF)
Textiles Care and Maintenance (92KB PDF)

Case Studies

See how customers have used this product in our Case Study Library.

Awards

Industrial Design Excellence Awards (IDEA), co-sponsored by *Business Week* magazine--Caper seating earns Bronze award

Best of NeoCon, Gold Award in "Seating Desk/Task Chairs" for the Caper chair

IIDEX/NeoCon Canada, Bronze Award in "Seating, Desk/Workstation Chairs" for Caper Seating

Herman Miller's environmental advocacy is long-standing and comprehensive. Since the 1950s, we have been, in the words of founder D.J. De Pree, "stewards of the environment." Today over 400 employees play a direct role in the work of 9 different environmental groups engaged in efforts from improving air quality and reducing waste to green energy, LEED certification, and design for the environment.

Environmental Product Summary

CAPER® CHAIR

Design Story: A Hard-Working, Earth-Friendly Chair

To develop a solution for hard-working, multiuse spaces, Herman Miller built on its extensive work chair research base and applied it to secondary seating. The result is the Caper chair, designed by Jeff Weber, of Stumpf/Weber + Associates for ergonomic comfort, space efficiency, and multipurpose use.

In keeping with Herman Miller's commitment to environmental stewardship, Caper uses a high percentage of recycled content and is 100 percent recyclable. Its design requires minimal use of materials and components, which also minimizes production costs.

Caper—both the multipurpose stacker and the multitask chair—weighs an average 50 percent less than competitive products. This results in a significant reduction in raw materials and energy consumed in its manufacture, and a corresponding decrease in the amount of material to recycle at the end of the chair's life cycle.

Herman Miller's Design Protocol

Our commitment to corporate sustainability naturally includes minimizing the environmental impact of each of our products. Our Design for the Environment team (DfE) applies environmentally sensitive design standards to both new and existing Herman Miller products, utilizing the McDonough-Braungart Cradle-to-Cradle Protocol.

Cradle-to-Cradle goes beyond regulatory compliance to thoroughly evaluate new product designs in three key areas:

- *Material Chemistry and Safety of Inputs*—What chemicals are in the materials we specify, and are they the safest available?
- *Disassembly*—Can we take products apart at the end of their useful life, to recycle their materials?
- *Recyclability*—Do the materials contain recycled content, and more importantly, can the materials be recycled at the end of the product's useful life?

Material Content

The Caper chair's components are constructed from steel, plastic, and aluminum.

The Caper chair is up to **100 percent recyclable** at the end of its useful life.

Caper is comprised of **21 percent recycled** materials. This figure breaks down to 15 percent post-consumer and 6 percent pre-consumer recycled content.

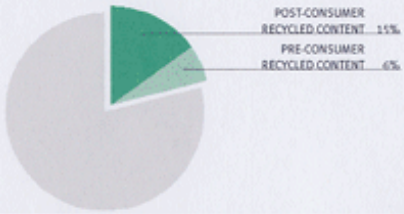

HermanMiller

- Steel components can be segregated and returned to the recycling stream as a technical nutrient.
- Most metal components are powder-coated, which eliminates solvents and volatile organic compounds (VOCs) from the finishing process.
- Plastic components are identified with an ASTM recycling code whenever possible, to aid in returning these materials to the recycling stream.
- All die-cast aluminum components are made from 100 percent recycled material.
- Aluminum can be recycled in a closed-loop system similar to steel.
- *Returnable/Recyclable Packaging*—Packaging materials include corrugated cardboard and a polyethylene plastic bag; each is part of a closed-loop recycling system, for repeated recycling.
  - Whenever possible, shipments between Herman Miller and its suppliers include the use of pallets and other returnable packaging to minimize waste.
  - On large North American orders, disposable packaging can be replaced with reusable shipping blankets.

Manufacturing Process

- *Green Energy and Emissions*—Herman Miller is committed to the use of 100 percent renewable energy by the year 2020. The company is similarly committed to achieving a goal of zero air and water emissions from manufacturing by 2020.
- *Waste*—All solid wastes are recycled to the greatest extent possible.
- *Worker Health and Safety*—Herman Miller strives to meet or exceed OSHA standards.
- *ISO*—Caper is manufactured in West Michigan at an ISO 14001-certified site.

Product Performance

- Easy assembly for cost-efficiency and quick parts replacement.
- Easy disassembly for recyclability.
- Number One design and environmental criteria: Durability.
- Backed up by Herman Miller's 12-year, 24/7 warranty.

Indoor Air Quality

The Caper chair is GREENGUARD™ certified as a low-emitting product that meets current indoor air quality standards. GREENGUARD-certified products also meet the emissions requirements of the State of Washington Furniture Systems criteria and the U.S. EPA Procurement Guidelines for Office Furniture.

Corporate Environmental Policy

For more information on Herman Miller's Corporate Environmental Policy and other environmental efforts, see our Environmental Advocacy booklet (link), or visit the "Environment" section of www.HermanMiller.com.

Supplier Support

At Herman Miller, we are committed to working closely with our suppliers to reduce our collective impact on the environment. We not only encourage our suppliers to minimize their operations' environmental impacts, but require they assist us in decreasing our facilities' negative environmental effects, as well.

LEED

The Caper chair may contribute to LEED credits due to its returnable/reusable packaging, durability, pre-consumer and post-consumer recycled content, and GREENGUARD certification. Depending on project location, Caper also may qualify to contribute to a LEED Regional Materials credit. Please contact your Herman Miller representative for detailed LEED credit sheets.

It's important to note that no interior furnishings, individually or collectively, can guarantee a specific number of points for LEED certification.

Herman Miller complies with the Federal Trade commission's Part 260 *Guides for the Use of Environmental Marketing Claims.*

12 58 83 Custom Residential Furniture

12 58 83.03 Office Furniture and Bedroom Dressers

The office furniture and bedroom dressers will be designed and built by UIUC Industrial Design students and will be constructed predominantly of PLYBOO, a multi-ply bamboo plywood.

12 58 83.05 Kitchen Table

The kitchen table will be designed and built by UIUC Industrial Design students. The base will be constructed of PLYBOO. The top (as well as the kitchen counter tops) will be constructed using 3form CHROMA, a solid resin panel that has a unique life cycle ability to be reprocessed that allows for it to be reinstalled in “like new” condition. Accent panels of 3form ECORESIN will be located in the upper kitchen cabinet doors. ECORESIN is the only translucent, co-polyester sheet material to contain significant amount of recycled content while maintaining core physical properties.

12 58 83.07 Coffee Table

The sofa, loveseat, and coffee table will be designed and built by UIUC Industrial Design students and will be constructed of 1” 3form CHROMA.

12 58 83.09 Sofa and Loveseat

The sofa and loveseat will be designed and built by UIUC Industrial Design students and will be constructed predominately of 3form CHROMA.

12 58 83.11 Bed

The bed and integrated night stands will be designed and built by UIUC Industrial Design students and will be constructed of 3form CHROMA.

12 58 83.13 Bathroom Vanity

The bathroom vanity will be designed and built by UIUC Industrial Design students and will be constructed of PLYBOO and 3from CHROMA.

More details and MSDS about the different materials used can be found on the following pages.

plyboo

For information on our beautiful coconut palm products, please visit www.durapalm.com or call 866.835.9859

About Us | News | Technical Data | Contact Us | Flooring | Plywood | Veneer | Plyboo Strand | Paneling | Home

About Us

FAQ

Click on a catagory to answer your questions!

General Questions
Flooring Questions
Plywood Questions
LEED Questions

Plyboo® History

Smith & Fong was founded by two friends in the spring of 1989. Since then we have dedicated our efforts to developing new uses and applications for bamboo. With imagination and technology bamboo is being manufactured into flooring, paneling, and plywood. The base material for all our products is "Plyboo". Plyboo is our term for laminated bamboo and is a registered trademark of Smith & Fong Company.

Timber Bamboo - Growing and Harvesting

Fast growing and long lived, our timber bamboo grows to a height of 40 feet with a diameter exceeding 6 inches and matures in 5-6 years. Bamboo is a grass and from an environmental standpoint, this is important. Unlike traditional hardwoods, bamboo when harvested does not require replanting. Mature bamboo has an extensive root system that continues to send up new shoots for decades. Our bamboo is grown in managed forests in China. Harvesting is done by hand, minimizing the impact on the local environment. By working with bamboo and understanding its growth patterns, bamboo farmers are able to maximize timber production while maintaining healthy forests.

Manufacture of Plyboo®

All our products are made from Bamboo strips. Bamboo is hollow in the center and we are working with the wall thickness of the stalk. The wall at the base can be more than an inch thick and will taper over the length of the stalk. We are milling a flat strip from the core of this wall. These strips are then boiled in a bath of boric acid and lime solution. The purpose of this bath is to extract the starch that attracts termites or powder post beetles. Boric acid and lime are a natural non-toxic repellent, used to insure that our products will come to you pest free and will continue to be so throughout the duration of their product life. The strips are kiln dried and sanded to a smooth surface for laminating. The strips are then laminated edge to edge to create a single-ply panel. These panels are then laminated again to each other to create a multi-ply bamboo plywood. Our products come in two colors, natural and amber. The natural color is the color of the bamboo untreated. The amber color is derived from a heat treatment process that darkens the bamboo, giving it a warm tea-stained, amber tone.

Smith & Fong believes strongly in both educating the public about the products we manufacture as well as supporting our community at large. To this end we are members of the following associations and organizations:

National Wood Flooring Association (NWFA)
American Bamboo Society (ABS)
Hardwood, Plywood and Veneer Association (HPVA)
U.S. Green Building Council (USGBC)
International Palm Society (IPS)
Co-op America Business Network
Architects / Designers / Planners for Social Responsibility (ADPSR)
Bioneers
Bay Area Build It Green (BABIG)

plyboo

Plywood

Smith & Fong manufactures a Full Line of Quality Bamboo Plywood

- All Bamboo plywood is 100% bamboo material
- All Bamboo plywood is unfinished upon manufacture
- Bamboo plywood is compatible with Industrial finishes
- Can be fire-treated to meet Class 1 requirements
- Bamboo plywood is a stock item and always available
- Custom sizes available up to 13' in length

7/8" x 48" x 96" 5-ply	
BP-7896A	amber, flat grain
BP-7896N	natural, flat grain

3/4" x 48" x 96" 3-ply | vertical cross core	
BP-4896A	amber, flat grain
BP-V4896A	amber, edge grain
BP-4896N	natural, flat grain
BP-V4896N	natural, edge grain

3/4" x 48" x 96" edge grain solid	
BP-S4896VA	amber, edge grain
BP-S4896VN	natural, edge grain

1/2" x 48" x 96" 3-ply / vertical cross core	
BP-1296A	amber, flat grain, 3-ply
BP-V1296A	amber, edge grain, 3-ply
BP-1296N	natural, flat grain, 3-ply
BP-V1296N	natural, edge grain, 3-ply

1/4" x 48" x 96" 3-ply	
BP-1496A	amber, flat grain
BP-V1496A	amber, edge grain
BP-1496N	natural, flat grain
BP-V1496N	natural, edge grain

1/8" x 48" x 96" Veneer|Bamboo on plywood	
BP-1896A	amber, flat grain
BP-V1896A	amber, edge grain
BP-1896N	natural, flat grain
BP-V1896N	natural, edge grain

1 1/2" x 36" x 72"	
BP-EG3672A	amber end grain block
BP-EG3672N	natural end grain block

3/4" x 30" x 72" 3-ply vertical cross core Plyboo® Strand™	
BP-3472PH	honey strand
BP-3472PD	dark strand
BP-3472NEO	neopolitan strand

3/4" x 30" x 72" solid	
P-V3472A	amber, edge grain
BP-V3472N	natural, edge grain

1/2" x 16" x 72" solid	
BP-V1272A	amber, edge grain
BP-V1272N	natural, edge grain

3/8" x 16" x 72" solid	
BP-3872A	amber, flat grain
BP-3872N	natural, flat grain

To view more photos of our bamboo-ply applications, go to these links:
Modern Bamboo
Berkeley Mills
Laguna Bamboo
AlterECO
Factory 1 Design
Grasswood Cabinets
Fu-Tung Cheng
Bamboo Kitchens SF
Tomita Design

Bamboo Plywood Application and Usage

Bamboo plywood is made from 100 percent rapidly renewable bamboo, using adhesives that are both strong and low-emitting. Bamboo plywood can be cut and sanded using conventional woodworking equipment. It can also be glued or mechanically fastened using the same materials and fasteners commonly used with wood. Bamboo is a low resin, open grained material that takes stains and finishes exceptionally well.

Bamboo plywood comes in both an amber and natural light tone and is laminated to produce two different surface grains, edge and flat. The edge grain appears as 1/4" strips and the flat grain appears as 3/4" strips on the surface of the Bamboo plywood. It is then finish-sanded to a smooth 180 grit. Whether you are planning a small remodel or a national retail expansion, we have the bamboo material to do the job.

Plyboo® Plywood can contribute points to a LEED® 2.1 or 2.2 project as rapidly renewable material in these categories:

Credit MR 6, Rapidly Renewable Materials

Credit EQ 4.1, Low-Emitting Materials, Adhesives and Sealants

Credit EQ 4.2, Low-Emitting Materials, Paints and Coatings

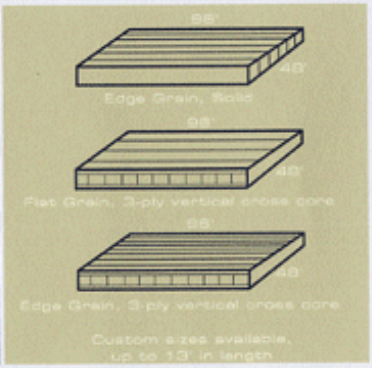

1/4" x 16" x 72" solid	
BP-1472A	amber, flat grain
BP-V1472A	amber, edge grain
BP-1472N	natural, flat grain
BP-V1472N	natural, edge grain

2.6mm x 7/8" x 500' : Edge Banding	
VNT-500A	amber, flat grain
VNT-500N	natural, flat grain
VNT-500VA	amber edge grain
VNT-500VN	natural edge grain

Material Data Safety Sheet (MSDS)
Bamboo Plywood & Veneers

This MSDS relates to Smith & Fong Plyboo bamboo plywood products.
ANSI Format

1. PRODUCT IDENTIFICATION

Product(s)	Manufacturing Location
Unfinished vertical and horizontal grain bamboo panels/veneers	Company headquarters, South San Francisco, CA, USA
Unfinished bamboo strand panels	Company headquarters, South San Francisco, CA, USA

Product Composition: Timber bamboo (Moso) kiln dried and laminated to produce a multi-ply plywood, or veneer.

Manufacturer's Information:

Manufacturer Name: Smith & Fong Company, Inc.
Manufacturer Address: 375 Oyster Point Blvd, Suite 3
South San Francisco, CA 94080 USA

Emergency Phone: (650) 872-1184
Additional Phone: (866) 835-9659
Website: www.plyboo.com
Email: dino@plyboo.com

Synonyms: Bamboo paneling, cabinetry, furniture

2. HAZARDOUS INGREDIENTS

Name	CAS#	Percent	Regulatory Agency	Exposure Limits	Comments
Bamboo	N/A	99-99.5	OSHA	PEL-TWA 15 mg/m3	Total dust
			OSHA	PEL-TWA 5 mg/m3	Respiratory dust fraction
			ACGIH	TLV-TWA 3 mg/m3	Respiratory dust fraction
			ACGIH	TLV-TWA 10 mg/m3	Inhalable particles
Urea Formaldehyde resin solids[1] (bamboo)	9011-05-6	1-.05	OSHA	PEL-TWA 0.75 ppm	Free gaseous
			OSHA	PEL-STEL 2 ppm	Free gaseous
			ACGIH	TLV-Ceiling 0.3 ppm	Free gaseous
Phenol Formaldehyde (bamboo strand)	N/A	1.0			

3. HAZARD IDENTIFICATION

Appearance and Odor: A natural or amber bamboo fiber with no, to a slight odor.

Primary Health Hazards: The health hazards of primary concern are exposure to dust particulate generated during machining, cutting, sanding, etc.

Primary Route(s) of Exposure: (X) Dust; (X) Inhalation: Dust or gas.

Medical Conditions Generally Aggravated by Exposure: Respiratory conditions or allergies.

Chronic Health Hazards: Bamboo dust has not been associated with long term chronic respiratory conditions.

Carcinogencity:
(X) NTP: Formaldehyde, Group 1
(X) IARC Monographs: Formaldehyde, Group 1
(X) OSHA Regulated: Formaldehyde

4. EMERGENCY AND FIRST-AID PROCEDURES

Ingestion: Not applicable.

Eye Contact: Dust in eye should be treated as a foreign object; flush with water several times. If irritation persists, seek medical attention.

Skin Contact: Although not typical, contact dermatitis in sensitive individuals can occur. Frequent handling of product can cause skin dryness, slight abrasion, cuts or slivers. Hands should be washed after handling. Seek medical attention if needed.

Ver 082106

Page 1

Skin Absorption: Under normal use, does not occur.

Inhalation: Highly sensitive individuals may experience respiratory difficulties. Bamboo dust can cause nasal irritation, cough or sneezing. Leave area and go to fresh air. Seek medical attention if respiratory difficulties or cough become severe, or nasal irritation persists.

5. FIRE AND EXPLOSION

Flash Point Method: N/A

Flammable Limits: N/A

Extinguishing Media: Water, water fog, carbon dioxide, sand or dry chemical.

Autoignition Temperature: Variable (400-500 F)

Special Firefighting: None.

Unusual Fire/Explosion Hazards: None.

6. ACCIDENTIAL RELEASE MEASURES

Dust generated from cutting, sanding and related machining may be shoveled or vacuumed and properly disposed of. A NOISH-approved dust respirator should be worn if dust exposure limits are exceeded.

7. HANDLING AND STORAGE

Precautions to be Taken In Handling and Storage: No special handling required in product purchase form. Product should be kept in cool, dry environment and not exposed to high heat or flame. Store in well-ventilated area.

8. EXPOSURE CONTROL MEASURES

Personal Protective Equipment:

RESPIRATORY PROTECTION: Not required, however a NOISH-approved dust respirator is recommended for high dust producing activities.
PROTECTIVE GLOVES: Not required, however work gloves are recommended to avoid sliver and splinters from machining or handling product.
EYE PROTECTION: Not required, however eye protection when machining or milling any material is highly recommended.
OTHER PROTECTIVE CLOTHING OR EQUIPMENT: Not required.
WORK/HYGIENE PRACTICES: Clean up dusty areas to avoid excess accumulation. Minimize practices that generate high air-borne dust particles.

Ventilation:

LOCAL EXHAUST: Provide local exhaust as needed.

MECHANICAL: Good ventilation in processing and storage areas should be provided.

9. PHYSICAL/CHEMICAL PROPERTIES

Boiling Point:	N/A
Vapor Pressure:	N/A
Vapor Density:	N/A
Specific Gravity:	0.58g/ml
Melting Point:	N/A
Evaporation Rate	N/A
Solubility in Water	<0.1
% Volatile by Vol	0
Percent Moisture	6%-9%

10. STABILITY AND REACTIVITY

Stability: (X) Stable

Conditions to Avoid: Excessive moisture, condensation or water vapor. Open flame or conditions above 400 F.

Incompatibility (Materials to Avoid): Oxidizing agents.

Hazardous Decomposition or By-Products: Thermal decomposition by-products include carbon monoxide, carbon dioxide, aliphatic adelhydes, rosin acids, terpens, and polycyclic aromatic hydrocarbons.

Hazardous Polymerization: Will not occur.

Ver 082106

Sensitivity to Mechanical Impact: N/A

Sensitivity to Static Discharge: N/A

11. TOXICOLOGICAL INFORMATION

This product, in purchased form, has no toxicological information.

OSHA Formaldehyde Hazard rating. = 0.75 ppm for local and systemic acute and chronic exposures; highly toxic. Reference OHSA Regulated Hazardous Substances, Government Institutes, Inc., February 1990.
IARC Formaldehyde Monograph, Vol. 88, 2005. = Group 1.

12. ECOLOGICAL INFORMATION

Bamboo (Moso species) is a rapidly renewable product, and does not contribute to the diminishment of natural wood supplies.

13. DISPOSAL CONSIDERATIONS

Waste Disposal Method: In purchased product form, incineration is the preferred disposal method. Land disposal should be guided by RCRA criteria and local requirements, and determination made if considered hazardous waste.

14. TRANSPORT INFORMATION

Not regulated as a hazardous material by U.S. Department of Transportation.
Not listed as hazardous material in Canadian Transportation of Hazardous Goods regulations.

15. REGULATORY INFORMATION

Chemicals listed:
IARC Monograph, Formaldehyde CAS # 50-00-0
Canadian Domestic Substance List, Formaldehyde CAS #50-00-0

Not a controlled Workplace Hazardous Material Systems product.

State Right to Know:

- California Prop 65 – This product contains formaldehyde which may be emitted from product. Formaldehyde is a compound that is known in the State of California to cause cancer. Smith & Fong Company has emission-tested its products for formaldehyde, and finds the emissions rates to be well below a significant risk level that would require product warnings.
- Pennsylvania – This product contains formaldehyde which depending on humidity and temperature may be emitted from product.

SARA Section 313 Information:
This product contains formaldehyde at a concentration that lists it with the chemical to SARA Title III, Section 313 supplier notification requirements. This product falls considerably below the Threshold Planning Requirement for Formaldehyde of 500 lbs.

SARA Section 311/312 Hazard Category
Under the above referenced category, and reviewed against definitions, the product meets:

- An immediate (acute) health hazard - yes – dust only
- A delayed (chronic) health hazard – no
- A fire hazard – no
- A reactivity hazard – no
- A sudden release hazard – no

16. ADDITIONAL INFORMATION

Prepared by: Smith & Fong Company, Inc.
Date Prepared: 07/01/01
Date Revised: 08/01/06

USER RESPONSIBILITY: The information contained in this MSDS comes from sources believed to be accurate or otherwise technically correct, and information from occupational health and safety professionals, and regulatory agencies. It is the user's responsibility to determine if this information is suitable for their applications, and to follow safety precautions as necessary. The user has the responsibility to make sure that this sheet is the most up-to-date initial or revision issue.

LIMITED WARRANTY FOR SMITH & FONG PLYBOO PLYWOOD

This Warranty is extended by Smith & Fong Company Inc. ("Smith & Fong," "We," and "Our") to the original purchaser ("You" and its other forms) of PLYBOO® plywood products. This Warranty gives you specific legal rights, and you may have other rights which vary from state to state.

(1) Warranty Coverage: All PLYBOO® plywood products are free from manufacturing defects and will remain free from such defects during the Warranty Period.

(2) Warranty Period: Five years from the date of purchase.

(3) Warranty Terms: PLYBOO® plywood must not be exposed to extreme variations in heat, humidity, moisture or dryness, including water saturation, or any other sources of extreme moisture, or changes in ambient moisture or humidity. No Warranty coverage is provided for impact damage, normal wear and tear, indentations, scratches or surface damage caused by failure to protect and maintain material properly. No Warranty Coverage is provided for variations in color, grain, or markings which are ordinary to natural products or which develop over time because of natural processes such as exposure to sunlight. Any damage caused to PLYBOO® plywood during shipping is the responsibility of the shipping company and is not covered under this Warranty.
(4) Disclaimer of Implied Warranties: The terms of this Warranty provide the exclusive and sole remedy available to You. This Warranty supersedes any other representations and Smith & Fong specifically DISCLAIMS ANY OTHER WARRANTIES, INCLUDING IMPLIED WARRANTIES OF MERCHANTABILITY, FITNESS FOR A PARTICULAR PURPOSE, OR ANY WARRANTIES ALLEGED TO ARISE FROM COURSE OF DEALING OR USAGE OF TRADE.

(5) Warranty Claims: If the PLYBOO® plywood product does not conform to the terms of this Warranty, You must notify Smith & Fong in writing at the address specified on this Warranty. You must provide written notice of your claim within thirty days of when You discovered the defect, or when you should have discovered the defect in the ordinary exercise of due care. You must provide Smith & Fong with a reasonable opportunity to inspect or examine the defective or nonconforming PLYBOO® plywood before You undertake any repair, removal, or replacement of the plywood. Your failure to comply with the requirements of this paragraph will void your Warranty Coverage.

(6) Warranty Remedies: Following notice of any defect and submission of a Warranty Claim by You, Smith & Fong, at its sole option and discretion, shall provide conforming PLYBOO® plywood to replace any nonconforming or defective PLYBOO® plywood, refund the purchase price of, or refund the percentage of the purchase price for the nonconforming PLYBOO® plywood equal to the percentage of the Warranty Period remaining when You notified Smith & Fong of the defect. In no event shall Smith & Fong be liable for any cost or damages associated with the removal or reinstallation o the plywood, or the cost of removing any fixtures or items of furniture.

(7) Exclusion of Incidental and Consequential Damages: IN NO EVENT SHALL SMITH & FONG BE LIABLE FOR ANY INCIDENTAL, SPECIAL, INDIRECT, OR CONSEQUENTIAL DAMAGES ALLEGED TO HAVE ARISEN UNDER THIS WARRANTY, OR ALLEGED TO BE OWING DUE TO THE FAILURE TO DELIVER GOODS, OR FROM ANY USE, MISUSE, OR INABILITY TO USE THE PRODUCT DUE TO DEFECTS IN THE PRODUCT.
Some states do not allow the exclusion or limitation of incidental or consequential damages, so the above limitation or exclusion may not apply to you.

]

375 Oyster Point Blvd, Suite 3
So. San Francisco CA 94080
Tel: 650.872.1184
Fax: 650.872.1185

Plyboo® Endblock Work Sheet

Material Characteristics:

Color: amber or natural
Texture: surface comprised of small sections .25"x .75" with dense cellular structures
Construction: 100% bamboo, end grain, constructed of pieces, 1.5"x .25"x .75"
Moisture: average 6 to 9% in original package
Hardness: average 1500 lbs.

Working Characteristics:

Cutting: Cuts well with standard table saw or compound miter saw. Use cross-cut or rip-cut saw blades as appropriate. 60 tooth carbide blade well sharpened renders best results. Note dull blades or jerking motions can cause splintering.

Drilling: Fresh drill bits and gradual pressure entry renders best results.

Sanding: Sands well using standard sandpaper and common hand or belt sanding equipment.

Fastening: Using the following method: pre-drill, install screw insert, fasten snug with screw or bolt. Do not use pneumatic nailer or nail and hammer method.

Adhesives: All common wood working adhesives can be recommended.

Finishing: Oil-based or water-based sealers (or vinyl sealer) and finishes. Oil or wax finishes only after applying a penetrating seal coat over the entire surface of the material. Endblock material must be well sealed on all surfaces including ends, edges, cutouts and bottom of panel.

Structural Considerations: For counter tops with full support beneath, e.g. cabinetry or frame structure, first install 3/4" plywood then fasten endblock to plywood using predrill method mentioned above. Where full support is not present, e.g. pedestal table stand with 12" center plate support, 1" plywood required. Maximum diameter of pedestal table top with 1" plywood support 36". Any design with more then a 12" cantilever must have a brace support. 2" maximum overhang without plywood support.

3form

reclaim

portfolio materials hardware objects samples reclaim architectural company international my3form
new clients applications industries locations materials solutions browse all

HOME > RECLAIM > LEED CREDITS

purchase
material returns
life cycle
varia
chroma
100 percent
leed credits

sustainable features of 3form

AS A MEMBER OF THE UNITED STATES GREEN BUILDING COUNCIL, 3FORM RECOGNIZES THE IMPORTANCE OF LEED® RATING SYSTEM TO SUSTAINABLE DESIGN. IN FACT, 3FORM PANELS AND OUR INNOVATIVE RECLAIM PROGRAM CAN HELP ACHIEVE LEED® CREDITS. CONTACT YOUR 3FORM REPRESENTATIVE FOR SPECIFIC INFORMATION.

Material Credit #2: Construction waste management
3form is the only resin manufacturer with a closed-loop recycling program. Old 3form panels from renovation projects are efficiently reclaimed and reused.

Material Credit #4: Recycled content
3form materials contain high levels of recycled content, either post-industrial waste or post-consumer product. The amount of recycled content varies by product — 3form ecoresin™: 40% post-industrial recycled content, 100 Percent: 100% post-consumer recycled content.

GREENGUARD Certification for 3form ecoresin™
3form ecoresin™ is GREENGUARD Certified for indoor air quality. The GREENGUARD Certification Program is an industry independent, third-party testing program for low-emitting products and materials. GREENGUARD Certification is a valuable tool for architects, designers, product specifiers, and purchasing organizations that want to locate, specify, and purchase off-the-shelf, low-emitting products for indoor environments.

MATERIAL SOLUTIONS

 TERMS | PRIVACY | SITEMAP | CONTACT SEARCH >GO

3form

reclaim

portfolio materials hardware objects samples reclaim architectural company international my3form

HOME > RECLAIM

purchase
material returns
life cycle
varia
chroma
100 percent
leed credits

reclaim

3FORM TAKES RESPONSIBILITY FOR ITS PRODUCTS OVER THE ENTIRE LIFE-CYCLE AS IS DEMONSTRATED BY THE RECLAIM PROGRAM. THIS PROGRAM FOR RECYCLING AND REUSING MATERIALS REMOVED FROM INSTALLATIONS OR PANELS DAMAGED IN PRODUCTION IS A BIDIRECTIONAL PROCESS SAVING ECORESIN PANELS FROM UNNECESSARY LANDFILL USE AND INSTEAD PREPARES THEM FOR REUSE.

Construction waste accounts for over fifteen percent of the trash deposited into landfills. 3form Reclaim presents immediate eco-friendly results such as giving a second life to products and helping you achieve LEED construction waste credits. This innovative program provides a valuable resource for architects, designers and contractors in an increasingly eco-conscious world.

For imperfect panels or those damaged during production, 3form trims the flaw, recycles the waste, and introduces the smaller panel into a new life cycle. Available in a set of standardized sizes and subject to 3form's rigid quality control standards, this project presents a rare opportunity for consumers and designers to acquire unique panels ready for a second use.

Ten percent of all proceeds from sale of 3form Reclaim panels are donated to The Rocky Mountain Institute. Rocky Mountain Institute (RMI) is an independent, entrepreneurial, nonprofit organization, fostering the efficient and restorative use of resources to make the world secure, just, prosperous, and life-sustaining.

> VISIT RMI.ORG

Browse the RECLAIM page and select a sample to view detailed specifications or to order. To arrange for used 3form materials to be returned for recycling, visit the **material returns** page.

YOU HAVE CONTRIBUTED TO SAVING OVER 57660 POUNDS OF MATERIAL FROM GOING TO LANDFILLS.

PURCHASE RECLAIM

MATERIALSOLUTIONS

TERMS | PRIVACY | SITEMAP | CONTACT

SEARCH >GO

3form

reclaim

portfolio materials hardware objects samples reclaim architectural company international my3form
new clients applications industries locations materials solutions browse all

HOME > RECLAIM > LIFE CYCLE > CHROMA

purchase
material returns
life cycle
varia
chroma
100 percent
leed credits

chroma life-cycle

3FORM CHROMA IS AN INNOVATIVE PRODUCT SPECIFICALLY DESIGNED TO BE REPURPOSED AND RE-FINISHED AS GOOD AS NEW. OUR UNIQUELY COLORED RESIN PANELS ARE ENGINEERED TO BE RESURFACED AND RE-COLORED AGAIN AND AGAIN. THIS PREVENTS CHROMA MATERIAL FROM ENTERING THE WASTE STREAM AND ALLOWS EACH PANEL TO BE MULTI-CYCLED INTO NEW ARCHITECTURAL INSTALLATIONS.

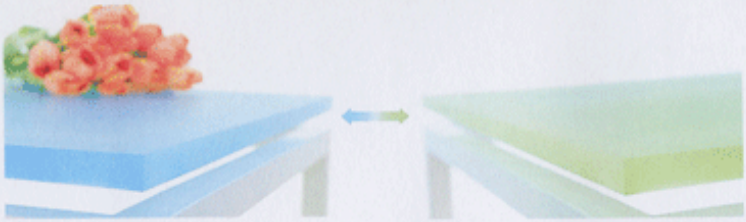

DESIGN

- The color is infused into the panels at a depth of 250 microns. This makes the color integral to the material while also allowing it to be reprocessed
- Renewable matte finish allows the material to be resurfaced to "like new" condition

ENVIRONMENTAL QUALITY

- Chroma's unique ability to be reprocessed allows it to be reinstalled in "like-new" condition, preventing product "down-cycling"

RECLAIM AND RECYCLE

- LEED® Credit for construction waste credits available when using Chroma
- Material leasing options available with end of life "eco-deposit"

MATERIALSOLUTIONS

TERMS | PRIVACY | SITEMAP | CONTACT

SEARCH >GO

3form® chroma

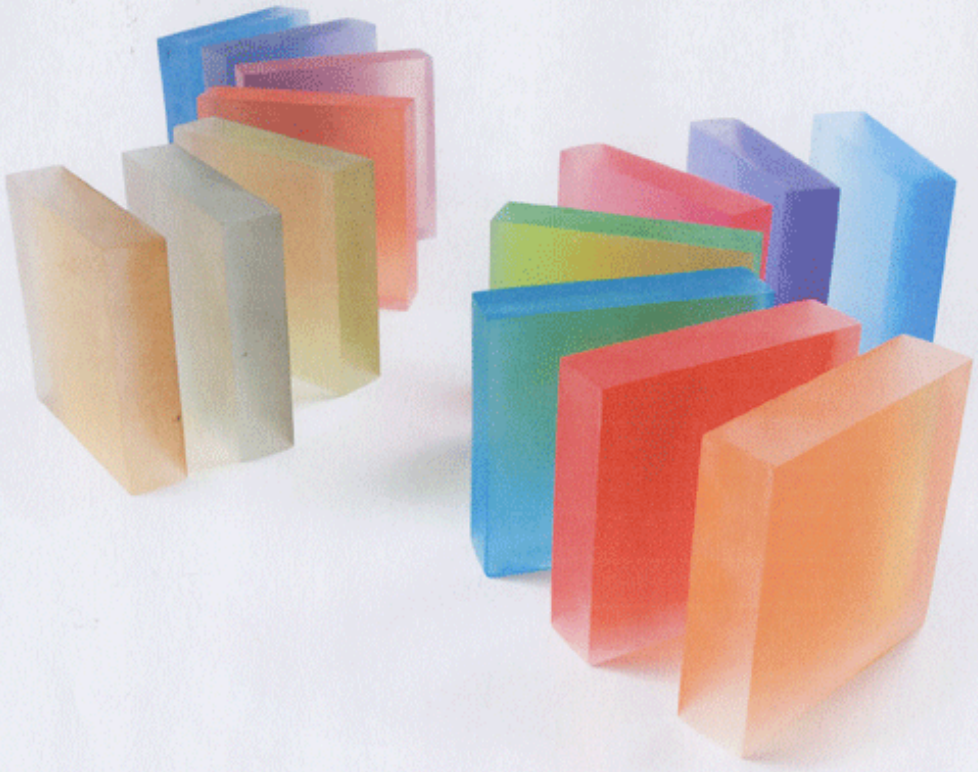

3form® chroma offers unique aesthetics and performance for horizontal and lighting applications. The product clarity offers designers the ability to create beautiful edge-lit pieces. Available in thick gauge formats, 3form *chroma* utilizes advanced coloring technology to take color to new "sights."

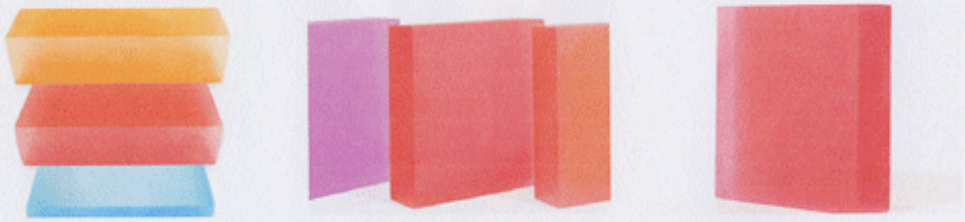

For more information, please visit **3-form.com** or call **800.726.0126**

3form chroma

Product Description

3form *chroma* offers unique aesthetics and performance for horizontal and lighting applications. The product clarity offers designers the ability to create beautiful edge-lit pieces. Available in thick-gauge formats, 3form *chroma* is colored with 3form color infusion and 3form applied coating technologies to take color to new "sights".

3form *chroma* is produced from cast polymethyl methacrylate (PMMA) resin that offers excellent optical clarity. The material is available in thick-gauge formats that results in rigid panels suitable for many horizontal applications. The moderate flammability of the material limits its interior use to lighting-specific and horizontal surface applications.

FEATURES AND BENEFITS

Maximum optical edge quality and light transmission—great for edge lighting
Excellent rigidity for providing sturdiness in horizontal applications
Surface is able to be completely refinished to maintain product "newness"
Qualifies for 3form Reclaim - keeping end-of-life material out of landfills

AVAILABLE COLORS*

REFINED	BOLD
Concord	Colbalt
Atlantic	Midnight
Moss	Violet
Blush	Marigold
Eggplant	Sea
Valley Mist	Grass
Olive	Boysenberry
Rosé	Cranberry
Mole Negro	Rasberry
Camel	Pool
Smoke Grey	Vitamin C
Mineral	Mai Tai
Titanium*	
Ghost*	
Ivory*	

*Colors only available with 3form applied coatings.

All colors available with 3form applied coating technology. Color infusion limited to 1/2" and 1" gauges only. Custom colors available. Contact your 3form representative for custom color submissions guidelines.

TEXTURES

Renewable matte - one side
Renewable matte - both sides (used with clear chroma)

For more information, please visit **3-form.com** or call **800.726.0126**

deflection guidelines for your application. If your application has specific engineering requirements, please contact the 3form Product Technology group for additional direction.

HEAT FORMING

3form *chroma* can be heated and formed to produce simple or even complex curves and shapes. The minimum inner radius for a heat formed shape should not be less than 3 times the sheet thickness. The optimal forming temperature ranges from 300º- 330ºF.

COLD BENDING

Though 3form *chroma* is commonly used in flat or heat curved applications, the polymeric nature of the material allows a minimal amount of cold bending for a given panel. The table below shows the minimum suggested radius for 3form *chroma* at a given gauge:

THICKNESS	MINIMUM BEND RADIUS
0.250" (6mm)	115" (292 cm)
0.375" (9mm)	170" (432 cm)
0.500" (12mm)	225" (571 cm)
1.000" (25mm)	450" (1143 cm)
2.000" (50mm)	900" (2286 cm)

EDGE FINISHING

Edges of 3form *chroma* panels are able to be machined or routed into a variety of different forms. In addition to a straight edge, edges may accept beveling, rounding, etc. Additional finishing, such as sanding or polishing, can also be provided to some edges.

REFINISHING

One of the unique benefits of 3form *chroma* is its ability to be refinished. If 3form *chroma* needs to be refinished for any reason, the panels may be renewed by sanding. Begin by dry sanding with a course grit paper (100 or 150 grit) to remove blemishes/scratches. Continue sanding with gradually finer grit papers until the surface is smooth and level and the blemish/scratches are removed. Complete the refinishing process by sanding with a 220 grit paper to attain a matte finish.

Even finer grit papers may be used to attain a satin or semi-polished appearance. With papers greater than 400 grit, wet sanding (with water) should be employed.

Be sure to keep sanders in motion at all times when refinishing surfaces or edges. Only use light pressure with power sanders in order to maintain evenness and avoid overheating of the sheet surface.

Select Physical Properties

MECHANICAL	ASTM METHOD	TYPICAL VALUES	
		US CUSTOM	METRIC
specific gravity	D792	1.19	759 kg/cm³

For more information, please visit **3-form.com** or call **800.726.0126**

3form chroma

TEST 3FORM CHROMA RESULT	3FORM CHROMA	RESULT
ASTM D 2843 Smoke Density	4.1%	PASS Less than 75
ASTM D 635 Flame Spread	Rate of burning: 1.2 in/min	PASS CC2
ASTM D 1929 Self-ignition Temperature	852°F	PASS Greater than 850°F

PANEL WEIGHT AT VARIOUS GAUGES

THICKNESS	WEIGHT FLUX
1/4" (6mm)	1.6 lb/ft^2 (7.8 kg/m^2)
3/8" (9mm)	2.3 lb/ft^2 (11.2 kg/m^2)
1/2" (12mm)	3.1 lb/ft^2 (15.1 kg/m^2)
1" (25mm)	6.2 lb/ft^2 (30.2 kg/m^2)
2" (50mm)	12.4 lb/ft^2 (60.5 kg/m^2)

EXPANSION/CONTRACTION ALLOWANCES

Like all resin products, 3form *chroma* will expand and contract nominally with fluctuations in temperature. The following formula provides allowances that should be made in framed or fitted applications:

Longest length of panel (inches) x temperature change of the sheet (°F) x 0.00004 =
Amount of Linear Expansion/Contraction (inches)

EXAMPLE:

A 48" x 96" panel that experiences a 50°F temperature change will expand/contract:

96 inches x 50 degrees x 0.00004 = 0.192 inches

Installers should take extra precautions if installation is occurring before the HVAC systems are operational. Allowances should also be made in the following situations:

Fastening points
Holes for standoffs and other hardware
Meeting points for multiple sheets of 3form *chroma*

EXTERIOR EXPOSURE PERFORMANCE

Though 3form *chroma* was designed for use in interior applications, it is an excellent choice for exterior applications when incorporated with 3form applied color coating technology. All chroma colors produced with our applied coloring technology are UV stable. Should your application be for exterior use, please notify your 3form sales representative.

DEFLECTION

3form *chroma* will exhibit different amounts of deflection given a variety of factors: fastening techniques, loads, gauges and panel dimensions to list a few. Your 3form representative can assist you with general

For more information, please visit **3-form.com** or call **800.726.0126**

3form chroma

CHROMA COLORING: COLOR INFUSION VS. APPLIED COLOR COATINGS

3form Chroma is a highly functional material that brings impact when color is introduced. To achieve very unique color and aesthetics, 3form incorporates two different coloring technologies: infusion and applied coatings.

3form color infusion is an advanced technology that impregnates the polymer matrix with water soluble colorants. The result is a deep (~250 microns), consistent color that handles wear and tear and maintains remarkable color uniformity. The only limitation of the Chroma color infusion technology is that its use is limited to interior applications.

3form applied coating technology is an alternate method used to achieve brilliant colors on 3form Chroma. The 3form applied coating technology was developed for exterior chroma applications. An important development forethought was made to conscientiously invoke a coating technology that is low in volatile organic compound (VOC) content to have minimal environmental impact. Further, the pigments used are non-toxic and contain no heavy metals. The applied coating technology rests on the surface of the material and must be handled carefully a when exposed in high contact surfaces such as transaction counters.

PANEL SIZES AND TOLERANCES

All dimensions and squareness (standard or custom) are subject to a +/- 1/8" (3mm) tolerance.

Gauge tolerances are an inherent part of working with resin. Given the unique casting process for 3form *chroma* a given gauge is subject to a +/- 10% thickness tolerance. If your application requires a tighter gauge tolerance, please notify your 3form Representative.

PANEL SIZE TABLE*	
NOMINAL GAUGE	SIZE(S)**
1/4" (6mm) applied only	4' x 8' (1.2m x 2.4m)
3/8" (9mm) applied only	4' x 8' (1.2m x 2.4m)
1/2" (12mm)	4' x 8' (1.2m x 2.4m), 4' x 10' (1.2m x 3m)
1" (25mm)	2' x 8' (.6m x 2.4m)*, 4' x 8' (1.2m x 2.4m), 4' x 10' (1.2m x 3m)
2" (50mm) applied only	2' x 8' (.6m x 2.4m)*, 4' x 8' (1.2m x 2.4m)

* 2' wide format available with applied coating technology only.

**2' wide format is additionally subject to a +0 / -1/4" (6mm) cut tolerance on 2' width (.6m).

Specifications

FLAMMABILITY & SMOKE TEST RESULTS – BUILDING CODE APPROVALS

3form *chroma* conforms to the 2003 *International Building Code* for light-transmitting plastics. The provisions of these codes provide adequate regulation for most applications of light-transmitting plastics [data based on 0.236" (6mm) thickness]:

For more information, please visit **3-form.com** or call **800.726.0126**

3form chroma

tensile strength	D638	10,000 psi	
elongation at rupture	D638	4.0%	
modulus of elasticity	D638	400,000 psi	28.1x103 kg/ cm^2
flexural strength (rupture)	D790	16,000 psi	1123 kg/cm^2
compressive strength (yield)	D695	17,500 psi	1230 kg/cm^2
compressive deformation (4000 psi (281 kg/cm2), 122°F (50° C), 24 hours)	D621	≤0.85%	
shear ultimate strength	D732	10,000 psi	703 kg/cm^2
impact strength (charpy method)	D256		
	notched	2.1 lbf*in/in	0.4 kgf*cm/cm
	un-notched	107 lbf*in/in	20 kgf*cm/cm
izod notched impact strength	D256	≤0.25 ft-lb/in	≤13.3 J/m
rockwell hardness	D785	M-103	
barcol hardness	D2583	49	
residual shrinkage (internal strain)	D702	2%	
OPTICAL			
refractive index	D542	1.49	
light transmission (total)	D1003	92%	
haze	D1003	<1%	
THERMAL			
forming temperature		300-330°F	149-157°C
deflection temperature (264 psi [18.6 kg/cm^2])	D648	99°C	210°F
vicat softening point	D1525	239°F	115°C
max recommended service temp		150°F	66°C
coefficient of thermal conductivity (k-factor)	cenco-fitch	1.3 btu/(hr)ft^2(°F)	0.19 w/m°K

For more information, please visit **3-form.com** or call **800.726.0126**

coefficient of thermal expansion D696	°F	10^{-4}(in/in/°F)	°C	10^{-4}(mm/mm/°C)
	-40	2.9	-40	5.22
	-20	3.0	-29	5.40
	0	3.2	-18	5.76
	+20	3.4	-1	6.12
	+40	3.7	+4	6.66
	+60	4.0	+16	7.20
	+80	4.3	+27	7.74
	+100	4.7	+38	8.46
	+120	5.1	+49	9.18
	+140	5.4	+60	9.72

flammability (1/8 inch [3mm] thick)	D635	1.2 in/min	25 mm/min
self-ignition temperature	D1929	852°F	490°C
specific heat @ 77°F [25°C]		428 cal/lb°F	0.35 cal/g°C
smoke density rating	D2843	4.1%	

Chemical Resistance of 3form Chroma to Select Compounds

The following table provides indicative performance of the chemical resistance characteristics of clear 3form *chroma* panels. The following codes are used to describe the chemical resistance characteristics:

R = RESISTANT

Indication that 3form *chroma* is able to withstand the identified compound for long exposure periods up to 120°F.

LR = LIMITED RESISTANCE

3form *chroma* is only able to resist affect when in contact with this compound for short periods at room temperature. It is advised that further determination of the affect of the substance in your particular application be further tested.

N = NOT RESISTANT

3form *chroma* is not resistant to the compound. The material will swell, craze, haze, dissolve or experience some physical change when exposed to this substance.

Polymer materials are affected by chemicals in different ways. Factors that initiate a change in performance or appearance when exposed to chemicals can be attributed to fabrication methods, exposure conditions, concentration of chemical substances or exposure duration of certain substances. Such factors can even influence the final affect on substances that 3form *chroma* is considered "Resistant" to by this method.

3form chroma

Further details are explained below:

FABRICATION

Stresses generated from sanding, grinding, drilling, polishing, machining, sawing and/or forming (hot or cold).

EXPOSURE

Exposure duration, stresses imparted during the application life-cycle due to loads, temperature changes, heat, environments, etc.

APPLICATION OF CHEMICALS

Application from contact, rubbing, wiping, spraying, soaking, etc. Also having an affect is the relative concentration of the chemical in question.

CHEMICAL	CODE	CHEMICAL	CODE
acetic acid (5%)	R	ammonium hydrozide (conc.)	R
acetic acid (glacial)	N	aniline	N
acetic anhydride	LR	battery Acid	R
acetone	N	benzaldehyde	N
acrylic paints and lacquers	LR	benzene	n
ammonia (aqueous solution)	R	bituminous emulsion	n
ammonium chloride (saturated)	R	bromine	N
ammonium hydroxide (10%)14	R	butanol	LR
butyl acetate	N	glycol	R
calcium chloride (saturated)	R	heptane	R
calcium hypochlorite	R	hexane	R
carbon tetrachloride	N	hot bitumen	LR
cement	R	hydrochloric acid	R
chlorine water	LR	hydrofluoric acid (40%)	N
chloroform	N	hydrogen peroxide (3%)	R
chromic acid (40%)	N	hydrogen peroxide (28%)	N
citric acid (10%)	R	iso octane	R
cottonseed oil (edible)	R	isopropyl alcohol	NR
detergent solution	R	kerosene	R
diesel oil	R	lacquer thinner	N
diethyl ether	N	lactic acid (80%)	LR
dimethyl formamide	N	methane	R
dioctyle formamide	N	methyl alcohol (50%)	LR

For more information, please visit **3-form.com** or call **800.726.0126**

ethyl acetate	N	methyl alcohol (100%)	N
ethyl alcohol (50%)	LR	methyl ethyl ketone (MEK)	N
ethyl alcohol (95%)	N	methylene chloride	N
ethyl dichloride	N	mineral oil	R
ethylene gycol	R	mortar	R
2-ethylhexyl sebacate	R	motor fuel (benzene-free)	R
formaldehyde (40%)	R	motor fuel (with benzene)	N
formic acid (2%)	R	muriatic acid (20%)	R
formic acid (40%)	LR	nitric acid (10%)	R
gasoline (regular, leaded)	LR	nitric acid (40%)	LR
glycerine	R	nitric acid (conc.)	N
glycerol	R	oil paints (pure)	R
olive oil	R	sodium hydroxide (60%)	R
oxygen	R	stearic acid	R
ozone	R	sulfuric acid (3%)	R
phenol solution (5%)	N	sulfuric acid (30%)	R
phosphoric acid (10%)	R	sulfuric acid (conc.)	N
plaster of paris	R	thinners (general)	N
soap solution (ivory)	R	toluene	N
sodium carbonate (2%)	R	tricholoroethylene	N
sodium carbonate (20%)	R	turpentine	LR
sodium chloride (10%)	R	urine	R
sodium hydroxide (1%)	R	water (distilled)	R
sodium hydroxide (10%)	R	xylene	N

Cleaning Instructions

3form *chroma*, like all thermoplastic materials should be cleaned periodically. A regular cleaning program will help to maintain the aesthetics and life of the material.

Rinse or wipe the sheet with lukewarm water. Remove dust and dirt from 3form *chroma* with a damp, soft cloth or sponge and a solution of mild soap and/or liquid detergent in water. Rinse or wipe the 3form *chroma* again thoroughly with lukewarm water. For more stubborn stains, dirty spots or grease, surface cleaners like Fantastik® or Formula 409® also work well. After all cleaning steps, be sure to rinse thoroughly with lukewarm water.

Always use a soft, damp cloth to blot dry. Rubbing with a dry cloth can scratch the material and create a static charge. Never use scrapers or squeegees on 3form *chroma*. Also avoid scouring compounds, gasoline, benzene, acetone, carbon tetrachloride, certain deicing fluids, lacquer thinner or other strong solvents.

3form chroma

DO NOT

Use squeegees or scrapers as they may scratch the sheet
Use scouring compounds or solvents such as: acetone, gasoline, benzene, carbon tetrachloride, or lacquer thinner to clean the sheet.
Use abrasives or highline alkaline cleaners
Use a dry cloth or a cloth of synthetic fiber such as rayon or polyester as they may scratch the sheet.

DO

Use warm water, mild detergent and a soft cloth or chamois
Rinse surface thoroughly after cleaning with lukewarm water
Blot dry with slightly damp, soft cloth or chamois

IMPORTANT

If a cleaning material is found to be incompatible in a short-term test, it will usually be found to be incompatible in the field. The converse, however, is not always true. Favorable performance is no guarantee that actual end-use conditions have been duplicated. Therefore, these results should be used as a guide only and it is recommended that the user test the products under actual end-use conditions.

For additional information about 3form *chroma* please contact 3form @ 801.649.2500

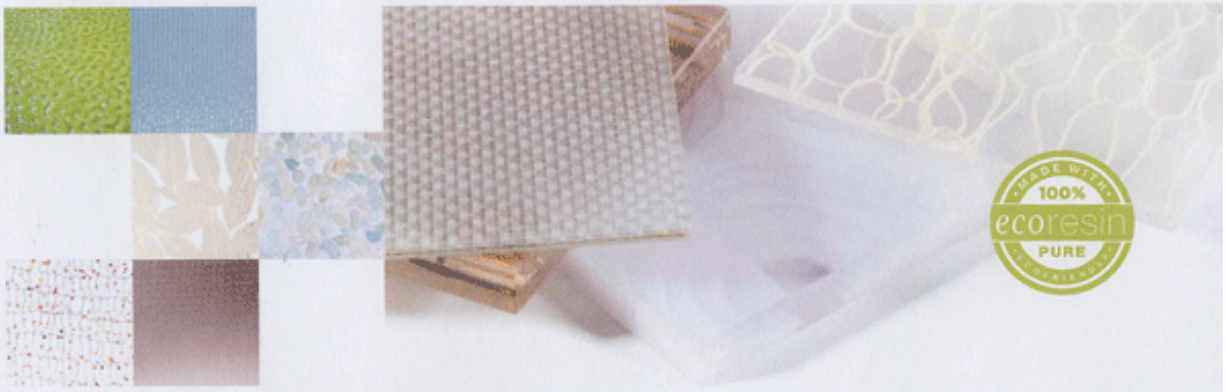

3form ecoresin™

imaginative. versatile. sustainable

features	benefits
chemical resistant	easy to clean and use in a variety of demanding environments
cost effective	wide range of price points to fit any budget
durable	40 times the impact strength of glass
exterior	available with UV stabilization for outstanding exterior performance
fire	self-extinguishing class-A and class-B performance
formable	easily formed to create complex curves and shapes
responsible	non-toxic, sustainable material made from ecoresin™, which is GREENGUARD Indoor Air Quality Certified®
translucent	create more than a million custom options to provide both daylighting and privacy
versatile	offers unlimited aesthetic and design options
dimensions	standard panels 4' x 8' (1219mm x 2438mm) 4' x 10' (1219mm x 3048mm) 5' x 10' (1524mm x 3048mm) custom sizes available
colors	over 70 standard colors pantone color-matching system custom digital imagery
finishes	various options

For more information, please visit **3-form.com/materials-ecoresin** or call **800.726.0126**

JANUARY 2007 | MAT1P - 001


3form ecoresin
3-form.com/materials-ecoresin

3form

materials

portfolio materials hardware objects samples reclaim architectural company international my3form

HOME › MATERIALS › ECORESIN

new
varia
100 percent
alabaster
chroma
glass
struttura

ecoresin
faq
reclaim
technical

ecoresin™ + the environment

ecoresin is the only translucent, co-polyester sheet material to contain significant amount of recycled content while maintaining core physical properties.

Composition

Produced from *Spectar** copolyester PETG—a non-toxic, polyester resin that stems from and is compatible with the PET family of materials.

Chemical Resistant

Makes for easy cleaning and reliable use in a variety of demanding environments.

Durable

Very tough material that easily exceeds the stringent impact requirements for safety glazing — 40 times the impact strength of glass.

Responsible

Engineered to incorporate 40% post-industrial reclaimed material.

Non-toxic

Does not contain any hazardous materials and is GREENGUARD Indoor Air Quality Certified™.

Code Compliant

Self-extinguishing flammability performance enables material to be used in a variety of interior applications

Quality

A critical part of our manufacturing process for Varia™ — all ecoresin™ undergoes rigorous quality screening

*Trademark of Eastman Chemical Company

21 00 00 FIRE SUPPRESSION

21 20 00 FIRE-EXTINGUISHING SYSTEMS

Section 4.1.2 of the 2007 Solar Decathlon Rules and Regulations requires the house to be equipped with a fire extinguisher with a minimum Underwriters Laboratory (UL) rating of 2A-10BC.

Two First Alert fire extinguishers, model number FE3A40 (datasheet on page 158), will be available for the house. One of them will be placed in the cabinet under the kitchen sink for interior access and the other in the electrical closet for exterior access. The 10-lb FE3A40 has a rating of 3A-40BC, which exceeds the above minimum requirement.

Fire Extinguisher

First Alert®

FEATURES/BENEFITS

Heavy-Duty Plus Fire Extinguisher

UL Rated 3-A:40-B:C. Effective against fires involving paper, wood, textiles and plastics as well as flammable liquid fires and "live" electrical fires.

Rechargeable.

Large, Easy-To-Read Pressure Gauge.

Wall hook included.

Metal valve and handle.

PRODUCT SPECIFICATIONS

Model Number
FE3A40

Catalog Number
FE3A40-6

Primary Packaging
Box

Unit UPC
029054752512

Unit Dimensions
18.5" H x 5.13" W x 4.88" D

Each Cube
0.27 Cubic Feet

Each Weight
10 lbs

Case Pack Qty
6

Case UCC
20029054752516

Case Dimensions
19" H x 16.5" W x 11" D

Case Pack Cube
2 Cubic Feet

Case Pack Weight
60 lbs

Pallet Pack Qty
192

Pallet Tier
16

Pallet Tier
2

Pallet Dimensions
41" H x 48" W x 43" D

Pallet Pack Cube
47.78 Cubic Feet

Pallet Pack Weight
1970 lbs

CAT. FE3A40-6

22 00 00 PLUMBING

All plumbing fixtures and lines shall be installed as per local, state, and national codes. Work shall be performed by a qualified individual and work shall be reviewed and approved by project architect and supervising construction officer.

22 06 00 SCHEDULES FOR PLUMBING

22 06 10 Schedules for Plumbing Piping and Pumps

Plumbing Equipment Schedule

Symbol	Equipment Description	Pipe Connections						Remarks
		Inlet	Outlet	CW Supply Pipe	HW Supply Pipe	CW Discharge Pipe	HW Discharge Pipe	
CWT	260 Gallon Cleanwater Rectangular Tank			-	-	1"	-	
GWT	350 Gallon Graywater Rectangular Tank	3"		-	-	-	-	
CP	Goulds HSC10 Centrifugal Pump	1 1/4"	1"	1 1/4"	-	1"	-	
PT	Goulds V45P 14-Gallon Pressure Tank	1"	1"	1"	-	3/4"	-	
WH	Richmond Water Heater 6EP20 - 1	3/4"	3/4"	3/4"	-	-	3/4"	
MXB	Vanguard Manablock 1/2" Manifold	3/4"	1/2"	3/4"	3/4"	1/2"	1/2"	
Notes:								

22 06 80 Schedules for Plumbing Fixtures

Plumbing Fixture Schedule

Symbol	General Fixture Description	Supply				Waste				Mt'g Hgt Drain	Mt'g Hgt Supply	Remarks
		Cold Water	Hot Water			Outlet	Trap	Fixture Drain	Vent			
A-1	Kohl Escale 2 Piece Dual-Flush Toilet	1/2"	-			4"	Int	3"	2"	FL	5"	
B-1	Kohl Vessels Bateau Lav	1/2"	1/2"			1 1/4"	1 1/4"	1 1/4"	1 1/4"	16"	20"	
C-1	Kohler Villager Bathtub	1/2"	1/2"			1 1/2"	1 1/2"	1 1/2"	1 1/4"	FL	24"	
D-1	Clothes Washer	1/2"	-			-	2"	2"	1 1/2"	46"	42"	
K-1	Kitchen Sink	1/2"	1/2"			1 1/2"	1 1/2"	1 1/2"	1 1/2"	16"	26"	
K-2	Dishwasher	1/2"	-			1 1/2"	1 1/2"	1 1/2"	1 1/2"	-	26"	
O-1	Sillcock	1/2"	-			-	-	-	-	-	12"	
Notes:												

22 10 00 PLUMBING PIPING AND PUMPS

22 11 00 FACILITY WATER DISTRIBUTION

22 11 13 Facility Water Distribution Piping

All interior plumbing piping shall be of PEX pipe rated for interior residential use and meeting applicable local, state, and national codes.

22 11 23 Domestic Water Pumps

ITT

Commercial Water

Goulds Pumps

HSC Multi-Stage Centrifugal Pump

FEATURES

- **Multi-stage Design:** Provides steady, quiet and vibration-free operation for years of trouble-free service.
- **Impellers:** 20% glass-filled thermoplastic precision molded for high efficiencies.
- **Compact Design:** Close-coupled, space saving design provides easy installation. Flexible coupling and bedplate not required.
- **Mounting:** Can be mounted in vertical or horizontal position.
- **Stainless Steel Pump Shaft:** Hex design provides positive drive for impellers and eliminates clearance adjustments.
- **Corrosion Resistant:** Stainless steel wear rings and coverplates. Electro-coated paint process applied inside and out and then baked on.
- **O-rings:** Throughout for positive sealing.
- **Easy to Service:** Can be taken apart for service by removing four bolts.
- **Motor:** Close coupled design. Ball bearings carry all radial/axial thrust loads. Designed for continuous operation. All ratings are within working limits of the motor.

GOULDS PUMPS

Goulds Pumps is a brand of ITT Residential and Commercial Water.

www.goulds.com

ITT

GOULDS PUMPS
Commercial Water

APPLICATIONS

Specifically designed for the following uses:
- Water circulation
- Booster service
- Liquid transfer
- Spraying systems
- Jockey pump service
- General purpose pumping

SPECIFICATIONS

Pump
- Capacities: to 50 GPM.
- Pressures: to 94 PSI (217 feet).
- Pipe connections: 1¼" suction, 1" discharge.
- Temperatures: to 180°F (82°C) max.
- Maximum working pressure: 125 PSI.
- Rotation: right hand, ie; clockwise when viewed from motor end.

Motor
- NEMA standard ¾ – 1½ HP, 115/230 V; 2 HP, 230 V, 60 Hz.
- Single phase (standard).
- Three phase available – see price book for order numbers.
- 3500 RPM.
- Built-in overload with automatic reset.
- Capacitor type.
- Stainless steel shaft.

Single Phase Models

HP	Order No.	Stages
¾	HSC07	2
1	HSC10	2
1½	HSC15	2
2	HSC20	3

Goulds Pumps is ISO 9001 Registered.

COMPONENTS

Item No.	Description
1	Mechanical seal
2	Impellers
3	Intermediate stage
4	Casing
5	Stainless steel hex shaft
6	Stainless steel wear rings
7	Stainless steel cover plates
8	O-ring seals
9	Impeller bolt and washer

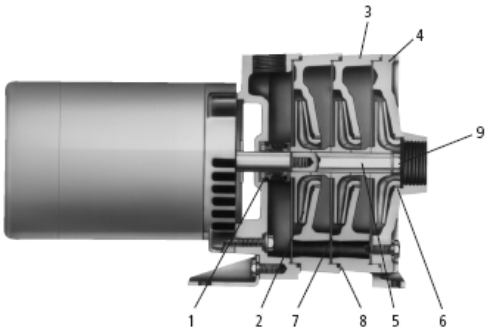

ITT

GOULDS PUMPS
Commercial Water

DIMENSIONS AND WEIGHTS

Model	HP	Length	Width	Height	Wt. (lbs.)
HSC07	¾	15	8	9	53
HSC10	1	16	8	9	58
HSC15	1½	17	8	9	72
HSC20	2	19	8	9	75

(All dimensions are in inches and weight in lbs. Do not use for construction purposes.)

PERFORMANCE CURVE

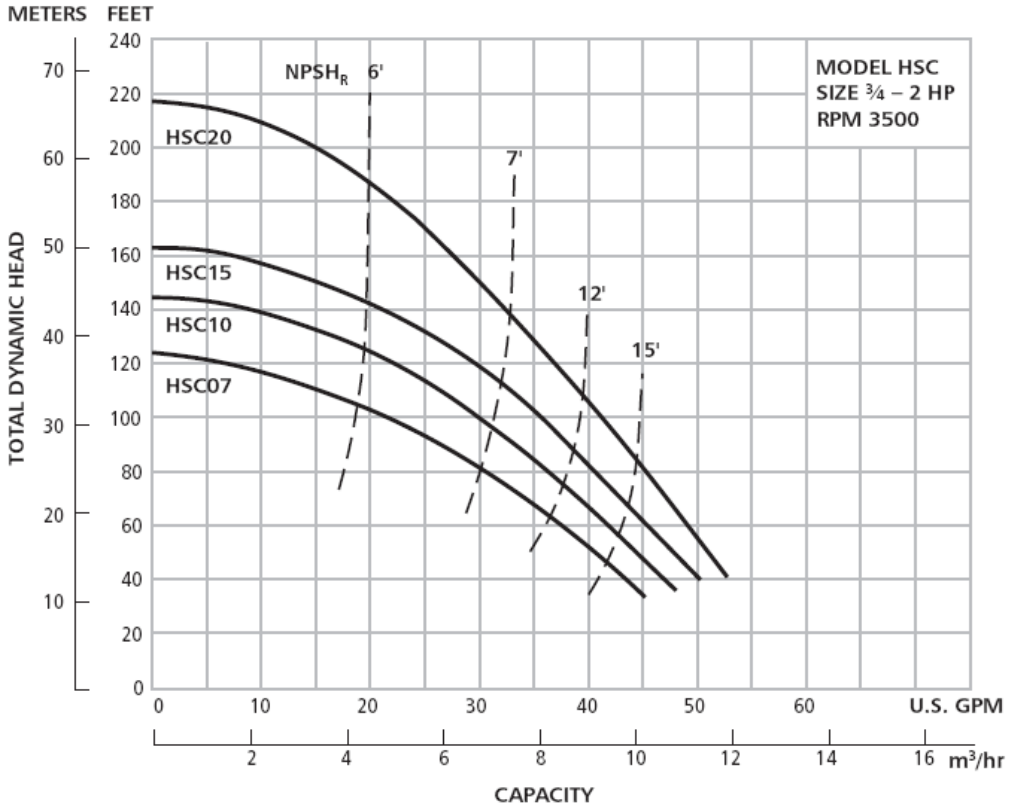

TO CONVERT FEET OF WATER TO PSI – DIVIDE FEET BY 2.31

3

22 40 00 PLUMBING FIXTURES

22 41 00 RESIDENTIAL PLUMBING FIXTURES

22 41 13 Residential Water Closets, Urinals, and Bidets

K-19796-0 Kohler Escale 2 Piece Dual Flush Toilet:

KOHLER®

ESCALE™

TWO-PIECE TOILET

K-19796

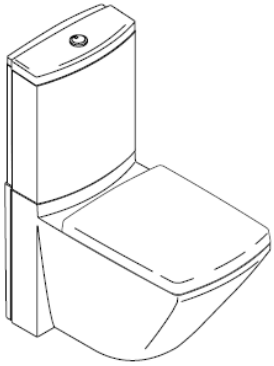

Features

- *Vitreous china*
- *Elongated bowl*
- *1.6 gallons (6 L) of water per flush for solid waste and .8 gallons (3 L) of water per flush for liquid waste*
- *Includes top-mount flush actuator*
- *Includes seat*
- *Includes mounting hardware*
- *Less supply*
- *European contemporary design*
- *Complements the Escale™ suite*
- *A backup shut-off valve is located in the tank, allowing the water to shut off without moving the toilet.*
- *12″ (30.5 cm) rough-in (RI)*
- *26-15/16″ (68.4 cm) x 15-3/8″ (39.1 cm) x 32-3/4″ (83.3 cm)*

Codes/Standards Applicable

Specified model meets or exceeds the following:

- *None applicable*

Colors/Finishes

- 0: White
- 47: Almond
- Other: Refer to Price Book for additional colors/finishes

Specified Model

Model	Description	Colors/Finishes		
K-19796	Two-piece toilet	☒ 0	❑ 47	❑ Other_____

Product Specification:

The vitreous china two-piece toilet shall be 26-15/16″ (68.4 cm) in length, 15-3/8″ (39.1 cm) in width, and 32-3/4″ (83.3 cm) in height. Toilet shall feature dual flush option of 1.6 gpf (6 lpf) for solid waste or .8 gpf (3 lpf) for liquid waste. Toilet shall feature an elongated bowl. Toilet shall include a top-mount flush actuator, seat, and mounting hardware. Toilet shall be for 12″ (30.5 cm) rough-in. Toilet shall be less supply. Toilet shall have a European contemporary design and complement the Escale™ Suite. Toilet shall be Kohler Model K-19796-__0___.

22 41 16 Residential Lavatories and Sinks

K-2273-0 Kohler Vessels Bateau Lavatory:

KOHLER®

VESSELS™

BATEAU™ LAVATORY
K-2273

Features

- *Vitreous china*
- *Above-the-counter*
- *18-1/4″ (46.4 cm) x 14-3/8″ (36.5 cm)*

Codes/Standards Applicable

Specified model meets or exceeds the following:

- *ASME A112.19.2*
- *IAPMO/UPC*
- *CSA B45*

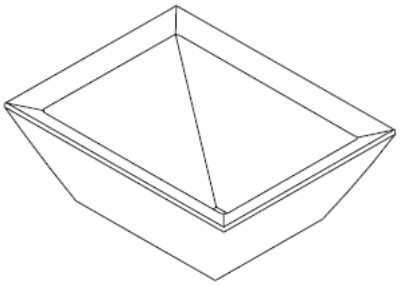

Colors/Finishes

- 0: White
- Other: Refer to Price Book for additional colors/finishes

Accessories:

- CP: Polished Chrome
- NA: None applicable
- Other: Refer to Price Book for additional colors/finishes

Specified Model

Model	Description	Colors/Finishes	
K-2273	Bateau lavatory	☒ 0 White	❑ Other_____

Recommended Accessories			
K-9018	P-Trap	❑ CP	❑ Other_____
K-T196	Falling Water® faucet trim with 8-1/4″ (21 cm) spout **OR**	❑ CP	❑ Other_____
K-T198	Falling Water faucet trim witih 10-1/4″ (26 cm) spout	❑ CP	❑ Other_____
K-307-K	Single control ceramic valve*	❑ NA	
K-7710	Drain **OR**	❑ CP	❑ Other_____
K-7715	Grid drain	❑ CP	❑ Other_____
*Valve must be ordered to complete Falling Water faucet.			

Product Specification

The lavatory with back shall be 18-1/4″ (46.4 cm) in length and 14-3/8″ (36.5 cm) in width. Lavatory shall be made of vitreous china. Lavatory shall be above-the-counter. Lavatory shall be Kohler Model K-2273-__0_____.

K-2273-0 Kohler Vessels Bateau Lavatory (Continued):

Technical Information

Fixture*:	
Basin area	15″ (38.1 cm) x 11″ (27.9 cm)
Water depth	5-3/4″ (14.6 cm)
Drain hole	1-3/4″ (4.4 cm) D.
*Approximate measurements for comparison only.	

Included components:	
Cut-out template	1002979-7

Installation Notes

Install this product according to the installation guide.

Product does not have an overflow.

Spout must be a minimum of 8″ (20.3 cm) long for adequate clearance into lavatory.

IMPORTANT! Product rests on countertop. Account for height of product when designing installation.

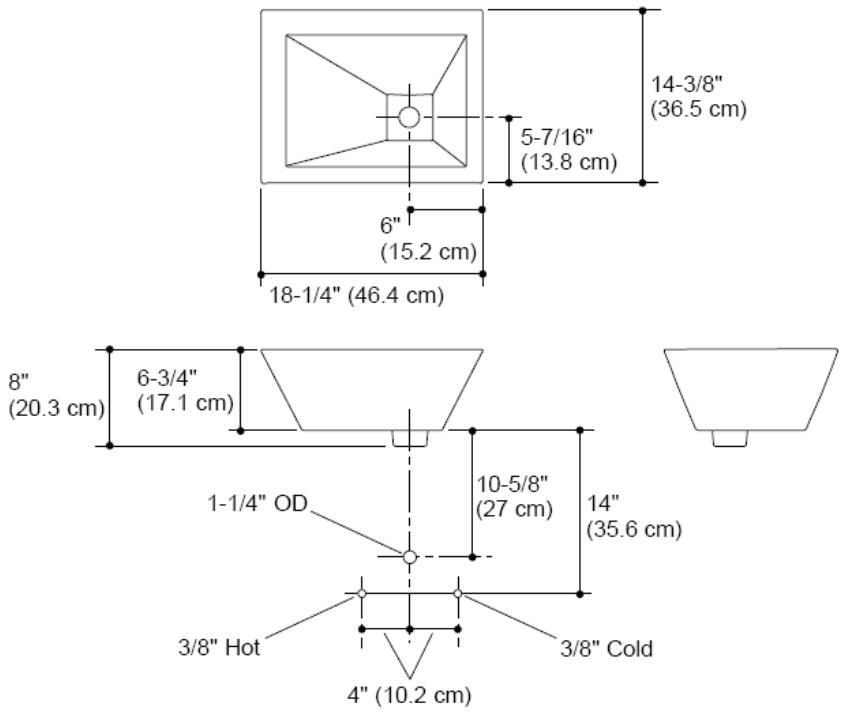

22 41 19 Residential Bathtubs

K-715-0 Kohler Villager 5 Bath/Left:

KOHLER.

VILLAGER™

BATH

K-715, K-716

ADA

FEATURES

- *60" x 30-1/4" x 14"*
- *Cast iron with Safeguard® finish*
- *Left or right outlet*
- *ADA compliant when installed with seat at head end*

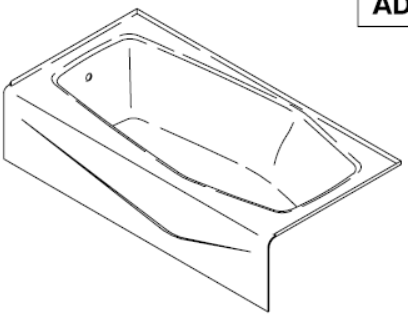

CODES/STANDARDS APPLICABLE

Specified model meets or exceeds the following:

- *ADA*
- *ASME/ANSI A112.19.1M*
- *CABO/ANSI A117.1*
- *IAPMO/UPC*
- *Canadian Standards Association (CSA)*
- *State of Massachusetts*

COLORS/FINISHES

- 0 White
- Other Refer to Fixtures Price Book for additional colors

Accessories:

- CP Polished Chrome
- PB Polished Brass
- Other Refer to Faucets Price Book for additional finishes

SPECIFIED MODEL:

Model	Description	Colors/Finishes		
K-715	Bath with outlet at left	☒0 White		☐Other_____
K-716	Bath with outlet at right	☐0 White		☐Other_____

Recommended Accessories				
K-7160-TF	Drain **OR**	☐CP	☐PB	☐Other_____
K-11660	Adjustable drain	☐CP	☐PB	☐Other_____

PRODUCT SPECIFICATION:

The bath shall be 60" in length, 30-1/4" in width, and 14" in height. Bath shall be made of cast iron with Safeguard® finish. Bath shall have an outlet at left or right. Bath shall be ADA compliant when installed with seat at head end. Bath shall be Kohler Model K-715 - 0.

K-715-0 Kohler Villager 5 Bath/Left (Continued):

PRODUCT INFORMATION

Fixture*:	basin area	top area	weight
Bathing well	45” x 22”	55” x 24”	316 lbs.
	water depth	capacity	
To overflow	8-5/8”	33 gal.	
* Approximate measurements for comparison only.			

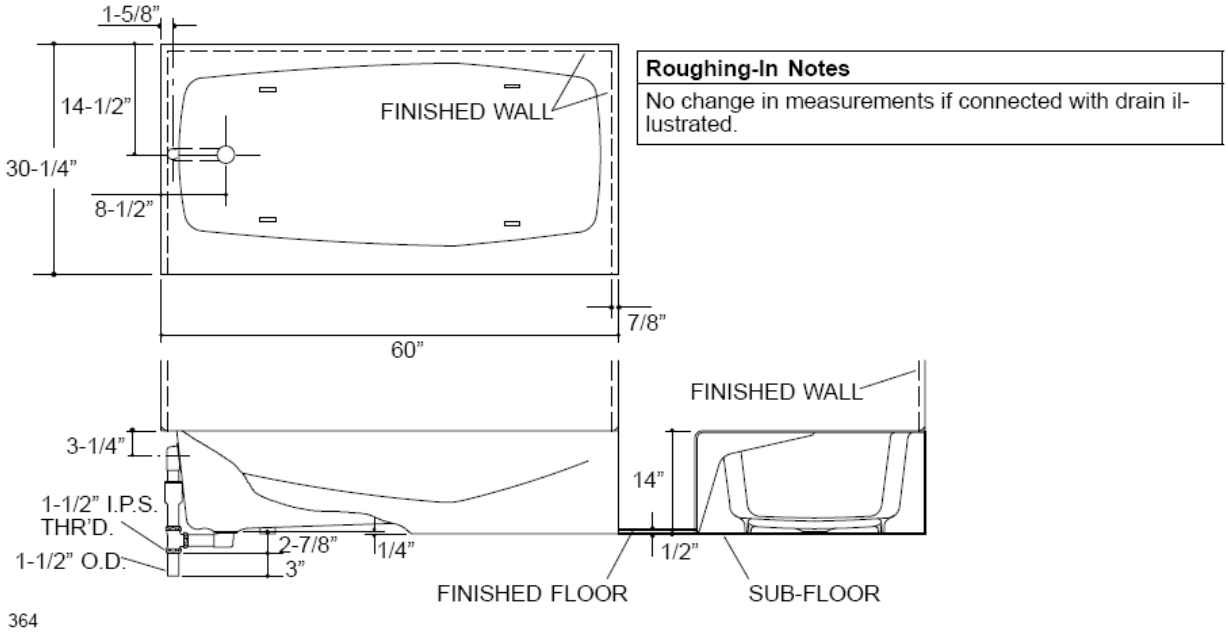

Roughing-In Notes
No change in measurements if connected with drain illustrated.

PRODUCT DIAGRAM

22 41 39 Residential Faucets, Supplies, and Trims

K-T945-4-BN Kohler Laminar WM Lavatory Faucet Trim:

KOHLER® FAUCETS

STILLNESS™

FAUCET

K-T945-4

ADA

FEATURES

- *Dual control wall mounted faucet*
- *Brass construction*
- *2.0 gallons (7.6L) per minute*
- *Lever handles*

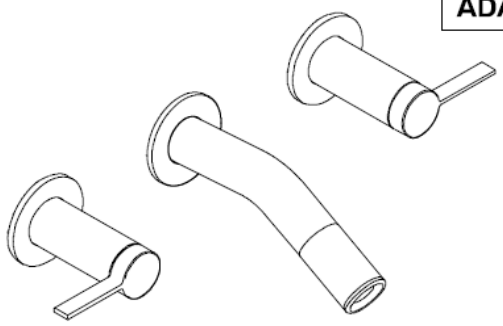

CODES/STANDARDS APPLICABLE

Specified model meets or exceeds the following:

- *ADA*
- *ASME/ANSI A112.18.1M*
- *CSA B125*
- *Energy Policy Act of 1992*
- *IAPMO/UPC*
- *NSF 61*

COLORS/FINISHES

- CP Polished Chrome
- Other Refer to Price Book for additional finishes

SPECIFIED MODEL:

Model	Description		
K-T945-4	Stillness™ Wall-Mount faucet trim	☐CP	☒Other

Required Accessory		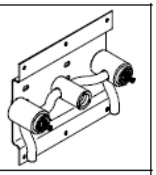
K-410-K	Wall-Mount Valve	☒NA

Optional Accessories on Page 2.

PRODUCT SPECIFICATION:

Dual-control wall-mount faucet shall be of brass construction. Product shall include lever handle. Trim shall be Kohler Model K-T945-4-BN.

INSTALLATION NOTES

A 4" (10.2cm) minimum must be maintained between bottom of spout and top of fixture rim.

Three 1-1/2" D. (3.8cm) cut-out holes required for spout and handle.

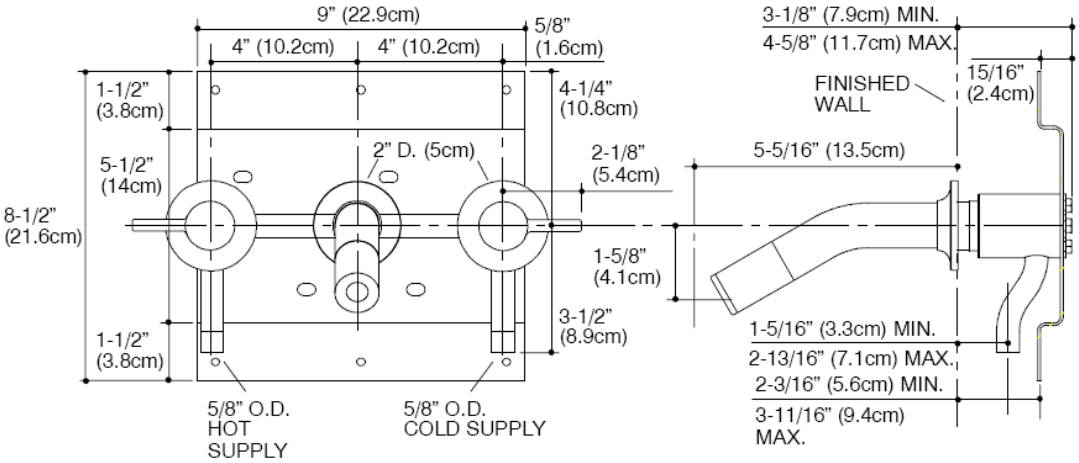

PRODUCT DIAGRAM

K-7700-BN Kohler 1-1/4 Touch activated Drain:

KOHLER FAUCETS®

POP-UP CLICKER DRAIN

K-7700

FEATURES

- *Brass pop-up drain*

CODES/STANDARDS APPLICABLE

Specified model meets or exceeds the following:

- *ASME/ANSI A112.18.2*
- *CSA International B125*
- *IAPMO/UPC listed*

COLORS/FINISHES

- CP Polished Chrome
- PB Polished Brass
- Other Refer to the Faucets Price Book for additional finishes

SPECIFIED MODEL:

Model	Description			
K-7700	Pop-up Clicker Drain	☐CP	☐PB	☒Other Finishes

PRODUCT SPECIFICATION:

Single hole mounting and brass pop-up drain. Drain shall be Kohler Model K-7700_-BN__.

K-7700-BN Kohler 1-1/4 Touch activated Drain (Continued):

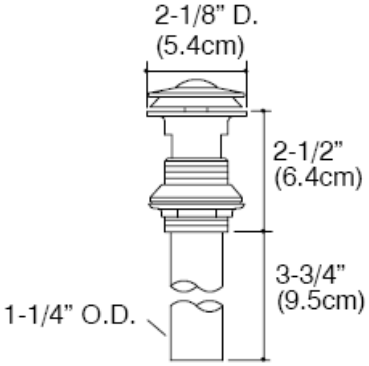

POP-UP DRAIN

PRODUCT DIAGRAM

K-7160-AF-BN Kohler Clearflow Bath Drain Above Floor:

KOHLER FAUCETS®

CLEARFLO DRAIN K-7160

FEATURES

- *17 gauge brass construction*
- *For 14"-16" deep bath installations*
- *Available in above- or through-the-floor variations*
- *Adjustable trip lever pop-up drain*
- *1-1/2" connection*
- *Brass tailpiece*

CODES/STANDARDS APPLICABLE

Specified model meets or exceeds the following:

- *ASME/ANSI A112.18.1M*
- *CSA B125*
- *IAPMO/UPC*

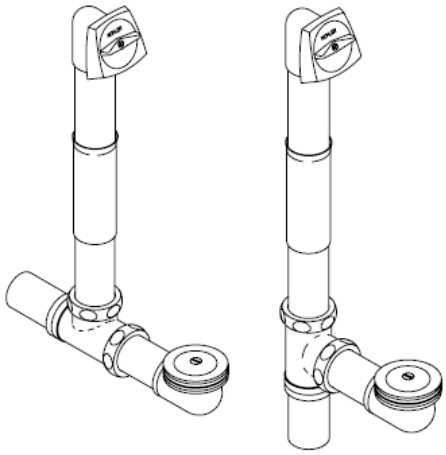

K-7160-AF K-7160-TF

COLORS/FINISHES

- CP Polished Chrome
- PB Polished Brass
- Other Refer to Faucets Price Book for additional finishes

SPECIFIED MODEL:

Model	Description			
K-7160-AF	For Above-The-Floor Installations	☐CP	☐PB	☒Other_BN_
K-7160-TF	For Through-The-Floor Installations	☐CP	☐PB	☐Other_____

PRODUCT SPECIFICATION:

Bath drain shall be of brass construction. Product includes an adjustable trip lever pop-up drain with 1-1/2" connection, and brass tailpiece. Product is intended for 14"-16" deep baths. Above-the-floor drain shall be Kohler Model K-7160-AF-_BN__ **OR** through-the-floor drain shall be Kohler Model K-7160-TF-_____.

K-7160-AF-BN Kohler Clearflow Bath Drain Above Floor (Continued):

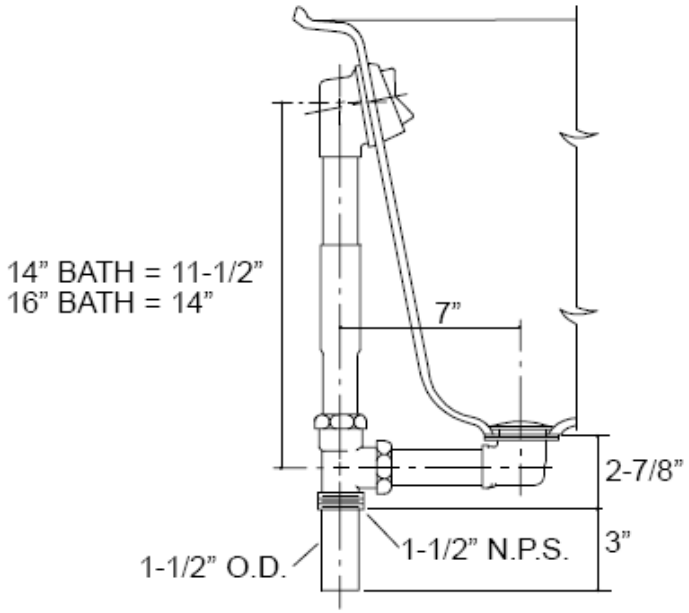

PRODUCT DIAGRAM

K-T948-4-BN Kohler Stillness Faucet Trim:

KOHLER FAUCETS®

STILLNESS™

BATH AND SHOWER FAUCET TRIM

K-T948

ALSO K-T949, K-T950, K-951, K-952, K-304, K-305

ADA

FEATURES

- *Brass construction*
- *Available with blade handle*
- *Push button diverter*

CODES/STANDARDS APPLICABLE

Specified model meets or exceeds the following:

- *ASME/ANSI A112.18.1M*
- *ASSE/ANSI 1016*
- *CSA B125*
- *IAPMO/UPC*

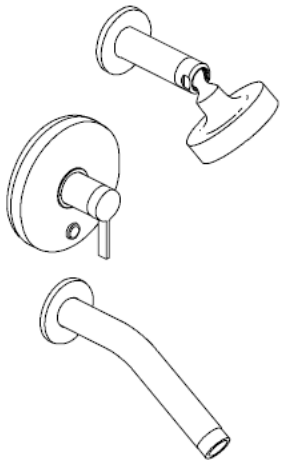

COLORS/FINISHES

- CP Polished Chrome
- Other Refer to Price Book for additional finishes

SPECIFIED MODEL: For complete faucet, both faucet trim and Rite-Temp valve must be specified.

Model	Description		
K-T948-4	Bath and Shower Trim, Blade Handle	☐CP	☒Other BN
K-T949-4	Shower Only Trim, Blade Handle	☐CP	☐Other____
K-T950-4	Valve Only Trim, Blade Handle	☐CP	☐Other____
K-951	Shower Head, Arm and Flange	☐CP	☐Other____
K-952	Bath Spout	☐CP	☐Other____

Required Accessory on Page 2.

PRODUCT SPECIFICATION:

Rite-Temp pressure-balancing single-control bath and shower faucet trim shall be of brass construction. Bath and shower trim shall include showerhead with arm and flange, 8-3/4" (22.2cm) non-diverter spout with N.P.T. connection, and faceplate with handle and push-button diverter. Shower only trim shall include showerhead with arm and flange, and faceplate with handle. Valve only trim shall include faceplate with handle. Faucet trim shall be K-T 948 - 4 - BN and Rite-Temp valve shall be K- 305 - K -NA.

K-T948-4-BN Kohler Stillness Faucet Trim (Continued):

STILLNESS™

Required Accessory		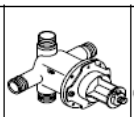	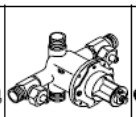			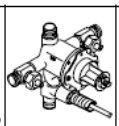	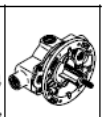
K-304-K	Rite-Temp Valve Without Stops	☐NA					
K-304-KS	Rite-Temp Valve With Stops		☐NA				
K-304-KP	Rite-Temp Valve With PVC Connections			☐NA			
K-305-K	Rite-Temp Valve Without Stops				☒NA		
K-305-KS	Rite-Temp Valve With Stops					☐NA	
K-306-KS	HiFlow Rite-Temp Valve With Stops						☐NA

PRODUCT INFORMATION

⚠ **WARNING: Risk of damage to the K-306-KS valve assembly.** When using the K-306-KS valve in a fiberglass or acrylic installation, use the thin wall installation kit (88526).

INSTALLATION NOTES

Install this product according to the installation guide.
Avoid cross-flow conditions. Do not install shut-off device on either valve outlet.
Cap shower outlet if deck-mount spout, diverter, or handshower is connected to spout outlet.
Install straight pipe or tube drop of 7" (17.8cm) to 18" (45.7cm) with single elbow between valve and wall-mount spout.

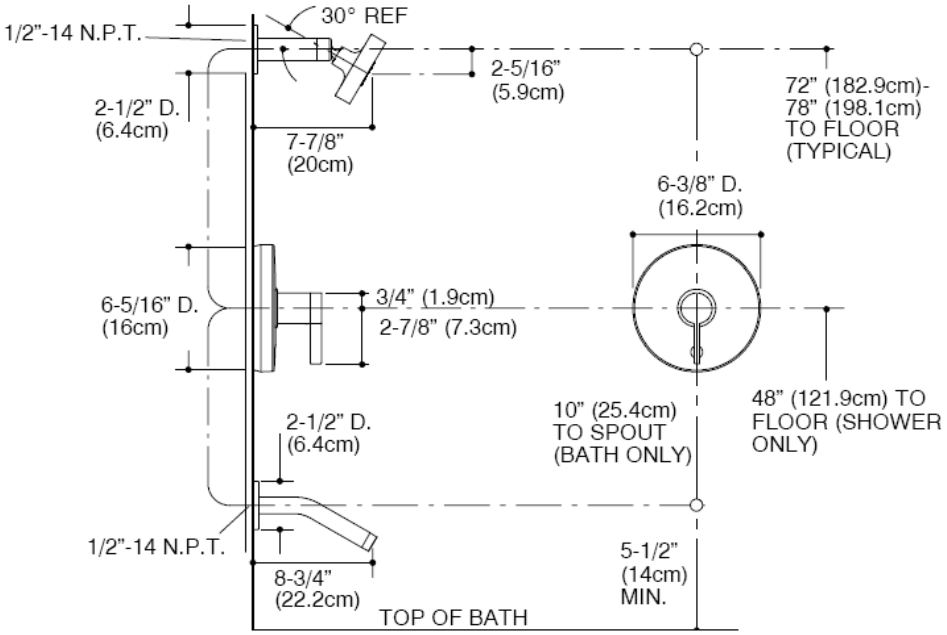

PRODUCT DIAGRAM

K-974-BN Kohler Stillness Slide Bar:

KOHLER® FAUCETS

Features

- *Metal construction*

SLIDE BAR

K-8524

ALSO K-349, K-421, K-974

Codes/Standards Applicable

Specified model meets or exceeds the following:

- *ADA*

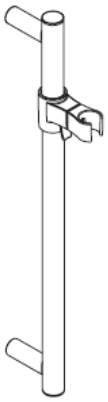

Colors/Finishes

- CP: Polished Chrome
- Other: Refer to Price Book for additional colors/finishes

Specified Model

Model	Description	Colors/Finishes	
K-8524	Slide bar	☐ CP	☒ Other BN

Optional Accessories			
K-349	Forté®/Bancroft™ slide bar trim	☐ CP	☐ Other ____
K-421	Memoirs® slide bar trim	☐ CP	☐ Other ____
K-974	Stillness® slide bar trim	☐ CP	☒ Other BN

Product Specification

Slide bar shall be of brass construction. Product shall be Kohler Model K-8524-BN.

Installation Notes

Install this product according to the installation guide.

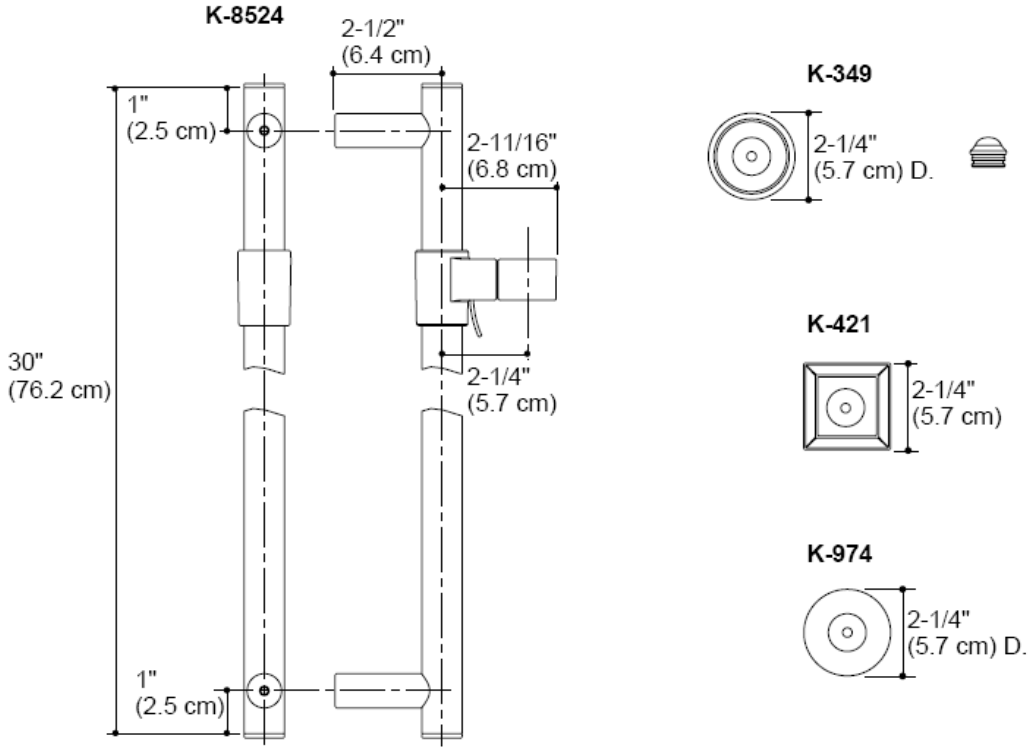

Product Diagram

K-976-BN Kohler Stillness Supply Elbow (Note: Discard Shower Head Supplied with K-T948, Kohler Stillness Faucet Trim):

KOHLER®

STILLNESS®

Features

- *Brass construction*

WALL-MOUNT SUPPLY ELBOW
K-976

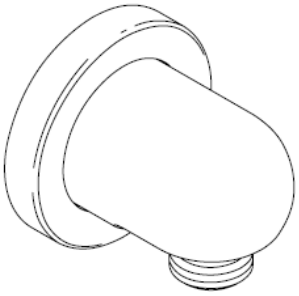

Colors/Finishes

- CP: Polished Chrome
- Other: Refer to Price Book for additional colors/finishes

Specified Model

Model	Description	Colors/Finishes	
K-976	Wall-mount supply elbow	☐ CP	☒ Other BN

Product Specification:

Supply elbow shall be of brass construction. Product is intended for wall-mount installations. Supply elbow shall be Kohler Model K-976-BN.

K-976-BN Kohler Stillness Supply Elbow (Continued):

STILLNESS®

Technical Information

Applicable product:	
Wall-mount supply elbow	K-976

Installation Notes

Install this product according to the installation guide.

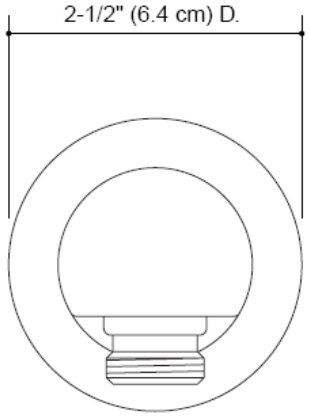

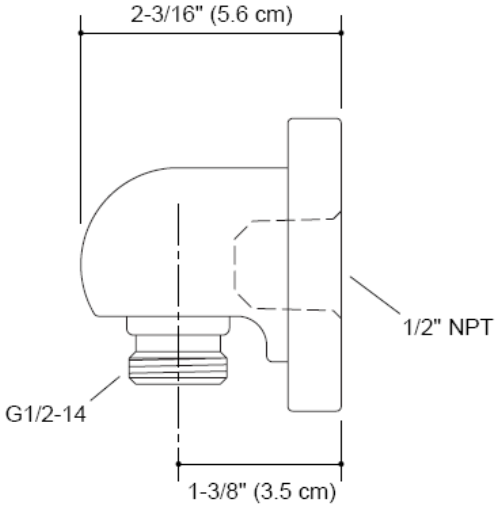

K-973-BN Kohler Stillness Handshower:

KOHLER® FAUCETS

STILLNESS®

HANDSHOWER

K-973

ADA

Features

- *2.5 gallons (9.5 L) per minute*
- *Complements Stillness® faucet line*
- *Wide-coverage, therapeutic massage, soft aerated, and reduced flow spray options*

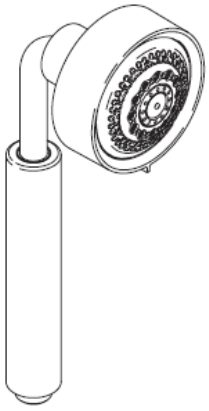

Codes/Standards Applicable

Specified model meets or exceeds the following:

- *ASME A112.18.1*
- *IAPMO/UPC*
- *CSA B125*
- *ADA*

Colors/Finishes

- CP: Polished Chrome
- Other: Refer to Price Book for additional colors/finishes

Accessories:

Specified Model

Model	Description	Colors/Finishes	
K-973	Handshower	☐ CP	☒ Other BN

Required Accessory		
K-9514	60″ (152.4 cm) metal shower hose	☐ CP

Product Specification

Handshower shall feature wide-coverage, therapeutic massage, soft aerated, and reduced flow spray options. Handshower shall complement the Stillness® faucet line. Handshower shall have a 2.5 gallon (9.5 L) per minute flow rate. Product shall be Kohler Model K-973-BN.

64901 – SS Brizo Pascal Pull Down Kitchen Faucet:

Model 64901 Shown

Submitted Model No.: 64901-SS

Specific Features:

BRIZO

KITCHEN FAUCETS

- Pascal Culinary Faucet w/Smart Technology
- Single Handle Widespread
- 2 & 3 Hole Sink Applications
- Hands Free & Touch Activation
- Pull Down Two Function Diverter
- Easy To Connect Hose Connection

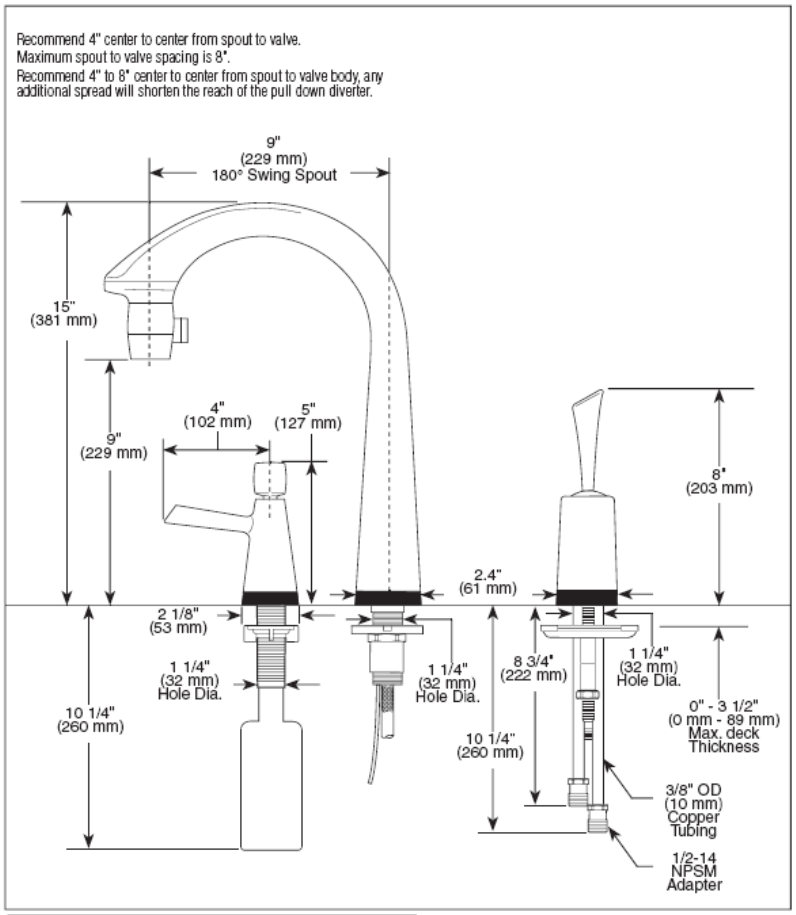

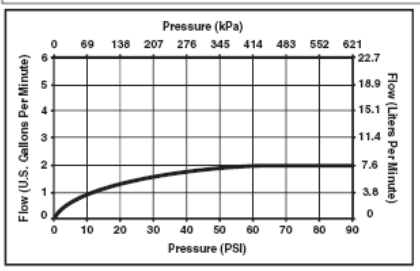

STANDARD SPECIFICATIONS:

- Solid brass fabricated body.
- 9" (229 mm) long, 15" (381 mm) high, spout swings 180°.
- Lever handle. Control mechanism is the rotating stainless steel ball type with replaceable non-metallic seats operating in stainless steel lined sockets.
- Control handle shall return to neutral position when valve is turned off.
- Electronics will turn off when valve is turned off.
- AC/DC Transformer to be 9 volt, 3 watt, three prong grounded connection.
- Battery pack to take 4 "D" cell batteries, 1.5-2.0 year battery life.
- Solenoid to be a two-way latching solenoid valve with an integrated filter.
- Features a dual function pull down diverter with a push button diverter. Two modes are an aeration stream and spray. Includes the twist and lock feature.
- Light indicator in nose indicator of Hands Free options active and indicates a low battery condition.
- Check valves to prevent cross flow are incorporated in the inlets.
- Dual check valves are installed in the diverter and hose assembly to prevent back siphonage.
- Includes stabilization plate for use on stainless steel sinks.
- Hands free feature turns on water flow automatically when object is placed under aerator; water turns off automatically when object is removed.
- Water turns on when spout or handle is tapped. Water can be turned off by tapping on spout or handle. Tap on/off can occur as fast as 1/2 second.
- Grasping and moving the spout will not cause water to turn on.
- Hands free feature can be turned on and off.
- Water turns on automatically when pull down diverter is extended from spout.

COMPLIES WITH:

- ASME A112.18.1 / CSA B125.1
- Indicates ADA compliance to ICC/ANSI A117.1
- NSF 61

Delta reserves the right (1) to make changes in specifications and materials, and (2) to change or discontinue models, both without notice or obligation. Dimensions are for reference only. See current full-line price book for finish options and product availability.

BSP-K-64900 Rev. A

Delta Faucet Company
Indianapolis, Indiana 46280
A Division of Masco Corporation of Indiana

23 00 00 HEATING, VENTILATING, AND AIR-CONDITIONING (HVAC)

The house employs a radiant heating and cooling system for sensible conditioning. The system is a heat pump with no secondary fluid for transfer to radiant panels (23 06 80.13). Radiant exchange is employed both on the inside and outside of the house using arrays of 6 wire-and-tube heat exchangers (23 06 80.16). A stand alone dehumidifier (see appliance section) handles latent conditioning. Control is accomplished via wireless thermostats and humidistats (23 06 80.13, 23 09 93, 23 09 13.13).

23 06 00 SCHEDULES FOR HVAC

23 06 20 Schedules for HVAC Piping and Pumps

Refrigerant Piping:

All piping used to transport refrigerant in the heat pump radiant systems will comply with ASTM B 280. The following table should be referred to for selecting tubing and fittings.

Use	Item	Physical Characteristics	Safe Working Pressure / Temperature at which SWP applies	Source of pressure Data
Refrigerant transport to and from Custom Outdoor Unit and Heat Exchanger Panel arrays	3/8" ACR Copper Tube	OD = 3/8" ID = 0.311"	787 PSI / 250 °F	http://www.copper.org/resources/pub_list/pdf/copper_tube_handbook.pdf
Construction of Wire-and-tube heat exchanger arrays	1/4" ACR Copper Tube	OD = 1/4" ID = 0.19"	1125 PSI / 250 °F	http://www.copper.org/resources/pub_list/pdf/copper_tube_handbook.pdf
T, Reducer, Union-Cross and Elbow where open flame is permissible.	Forged Pipe fittings with BCuP-2, 3, 4 or 5 brazing metal.	Melting Ranges within 1300 °F and 1550 °F	Meet or exceed tube strength	http://www.copper.org/resources/pub_list/pdf/copper_tube_handbook.pdf
T, Reducer, Union-Cross and Elbow where open flame is not permissible.	Swagelok compression fittings (3/8"-1/4" reducer union, 3/8"-3/8" union, elbow and cross union)	ID = 3/8" ID = 1/4"	800 PSI / 200 °F	http://www.swagelok.com/downloads/webcatalogs/EN/MS-01-107.PDF
Joining 1/4" ACR Copper Tube to Wire-and-Tube Heat Exchangers	3/8" - 1/4" Brass Swagelok Compression Fittings	ID = 3/16" ID = 3/4"	800 PSI / 200 °F	http://www.swagelok.com/downloads/webcatalogs/EN/MS-01-107.PDF

23 06 30 Schedules for HVAC Air Distribution

The only forced air in the house will be for ventilation and will employ a Trane model ERVR100A9P00A Energy Recovery Ventilator (ERV) with a permeable membrane energy exchanger. The installation guide of the ERV is given on the following pages.

Installer's Guide

18-HE58D1-3

Energy Recovery Ventilator (ERV)

***ERVR100A9P00A**
***ERVR200A9P00A**
***ERVR300A9P00A**

First letter may be "A" or "T"

⚠ WARNING: HAZARDOUS VOLTAGE - DISCONNECT POWER BEFORE SERVICING

ALL phases of this installation must comply with NATIONAL, STATE AND LOCAL CODES

IMPORTANT — This Document is **customer property** and is to remain with this unit. Please return to service information pack upon completion of work.

A. GENERAL INFORMATION

⚠ WARNING

THIS INFORMATION IS FOR USE BY INDIVIDUALS HAVING ADEQUATE BACKGROUNDS OF ELECTRICAL AND MECHANICAL EXPERIENCE. ANY ATTEMPT TO REPAIR A CENTRAL AIR CONDITIONING PRODUCT INCLUDING AN ERV MAY RESULT IN PERSONAL INJURY AND/OR PROPERTY DAMAGE. THE MANUFACTURER OR SELLER CANNOT BE RESPONSIBLE FOR THE INTERPRETATION OF THIS INFORMATION, NOR CAN IT ASSUME ANY LIABILITY IN CONNECTION WITH ITS USE.

⚠ CAUTION

To prevent shortening its service life, the ERV should not be used during the finishing phases of construction. Compounds used in construction and construction dust may cause rapid deterioration of the cabinet and internal components. To avoid damage keep drywall spray, construction dust, etc from entering the air stream of the unit.

These instructions do not cover all variations in systems or provide for every possible contingency. Should further information be desired or particular problems arise which are not covered sufficiently by this manual, contact your local distributor or the manufacturer as listed on the ERV nameplate.

BEFORE YOU BEGIN THE INSTALLATION
Check carefully for any shipping damage. This must be reported to and claims made against the transportation company immediately. Open carton, remove packing material, loose parts and ship-with literature. Check to be sure all major components are in the unit. Any missing parts should be reported to your supplier at once, and replaced with authorized parts only.

Contents

Figure 1

Installer's Guide

READ ALL INSTRUCTIONS BEFORE INSTALLING THE UNIT.

1. Use the unit in the manner intended by the manufacturer. If you have questions contact your local distributor.
2. Before servicing or cleaning the unit, switch power off at service panel and lock service panel to prevent power from being switched on accidentally.

⚠ CAUTION

More than one disconnect switch may be required to de-energize the equipment before servicing

3. Installation work and electrical wiring must be done by qualified person(s) in accordance with all applicable codes and standards, including fire rated construction codes and standards.
4. When cutting or drilling into a wall or ceiling, do not damage electrical wiring and other hidden utilities.
5. Never place a switch where it can be reached from a tub, shower or sink.
6. This unit is provided with a grounded power cord which must be plugged into a properly grounded outlet.

⚠ WARNING

Carbon Monoxide Poisoning Hazard

Failure to provide sufficient air needed for proper combustion and exhausting of gases through the flue (chimney) of fuel burning equipment that might be installed in the area affected by this equipment may cause Personal Injury or Death.

The unit is intended for general building ventilation. Connection of the unit to ventilation exhaust, drier exhaust or ranger exhausts will damage the unit and could result in hazardous levels of toxic materials in the home. If this unit is exhausting air from a space in which chimney –vented fuel burning equipment is located, take steps to assure that the combustion air supply is not affected. Follow the heating equipment manufacturer's guidelines and safety standards such as those published by the National Fire Protection Association (NFPA), the American Society For Heating, Refrigeration and Air Conditioning Engineers (ASHRAE) and local code authorities.

⚠ CAUTION

This unit is intended for general ventilating use only. Do not use to exhaust hazardous or explosive materials and vapors.

⚠ CAUTION

This installation manual shows the suggested installation method. Any structural alterations necessary for installation must comply with all applicable building, health and safety code requirements.

ERV LOCATION CONSIDERATIONS

·Select a location to install the ERV with the objective of keeping the fresh air supply ducts and exhaust ducts as short as possible. Short runs provide the best performance and help ensure system balance; the amount of air brought into the home equals the amount of air exhausted. Unbalanced air flow can cause poor performance and may result in frosting of the core during extremely cold weather. See ACCA Manual D for ducting guidelines.

·If the fresh air supply from the ERV is connected to the heating and cooling system return air duct, locate the ERV as close to the furnace or air handler as possible.

·If the ERV is to be installed independent from the forced air heating and cooling system locate the ERV to minimize the length of all duct runs.

·An electrical outlet must be located within reach of the ERV power cord. The power cord is 36 inches long.

·Provide at least 24" of clearance at the front of the ERV for service access to the blowers, filters and heat exchanger core.

·Provide access for maintenance so the front cover can be opened to allow cleaning the core and filters.

·ERV's may be installed in a basement, mechanical room, storage area, garage, accessible attic or crawl area. Conditioned spaces are prefferred.

UNIT INSTALLATION

INSTALLATION ON A CONCRETE FOUNDATION WALL

Install hanging bracket to the wall with appropriate concrete anchors (supplied by installer). Remove backing from two 2" strips of foam tape and apply each piece of foam tape equally spaced along the unit's mounting flange that will be held by the hanging bracket. (See Figure 2)

The tape should be applied in a "U" shape to cushion both the front and back of the integral flanges. Apply the other two pieces of foam over the two holes that will be used for fastening the other unit flange.

Lift unit and slide unit flange into the hanging bracket. **Use caution and an assistant when installing unit overhead.** Using metal flat washers, fasten flange opposite the hanging bracket to structure.

Safety concrete anchors should similarly be installed passing through the hanging bracket and flange. Make sure the anchors, supplied by installer, are properly selected for the loads and substrate involved.

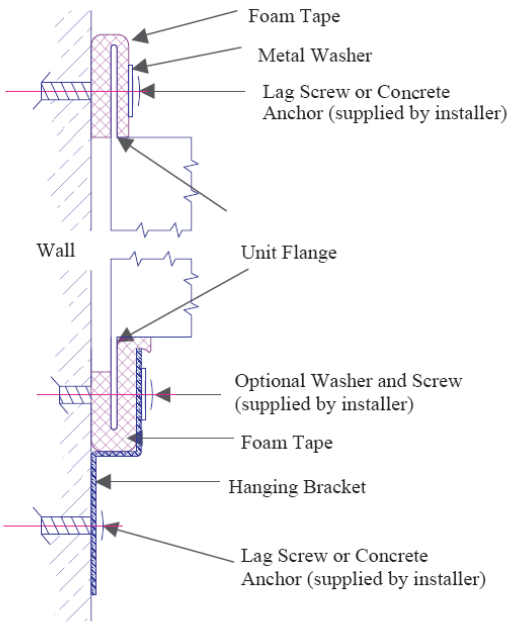

Figure 2

INSTALLATION ON A STUD WALL

Mount the unit using the supplied hanging bracket kit as described for installation on a concrete foundation. Use appropriate fasteners for a stud wall (supplied by installer). Be sure the fasteners are properly selected to support the load. Note that the hole layout on the integral mounting flanges and the hanging bracket are spaced for 16" or 24" on center framing patterns.

INSTALLATION ON OVERHEAD FLOOR JOISTS (Access Door Swings Open Down)

The unit may be fastened directly to floor joists using the hanging bracket and integral flange. Mount as described for installation on a concrete foundation wall except use appropriate fasteners for a floor joist supplied by installer. Be sure the fasteners are properly selected to support the load.

ATTIC INSTALLATION

INSTALLATION ON ROOF RAFTERS

The unit may be mounted directly to the roof rafters. (See Figure 3) Mount as described for installation on a concrete foundation wall except use appropriate fasteners for a roof rafter. Be sure fasteners are properly selected to support the load.

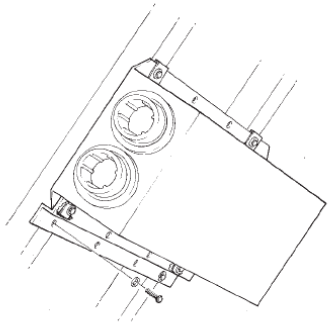

Figure 3

SUSPENSION OF ERV FROM ROOF RAFTERS

Suspend unit from the roof rafters. The unit may be suspended from the roof rafters by chains and springs, supplied by the installer. See Figures 4, 4a, and 5.

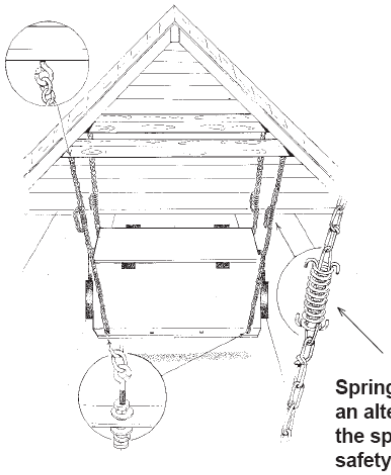

Spring option is an alternative to the spring with safety chain

Figure 4

Installer's Guide

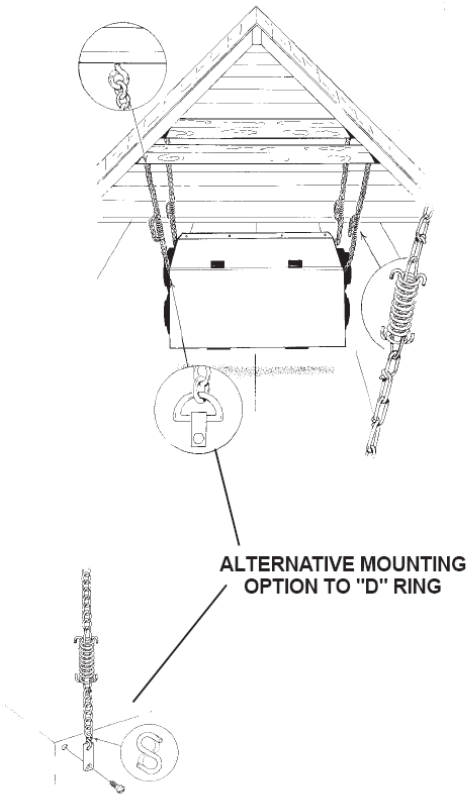

Figure 5

Be sure suspension hardware and fasteners are properly selected to support the load.

UNIT MOUNTING POSITIONS

The unit may be installed in a variety of positions EXCEPT as noted in Figure 6d.

APPROVED MOUNTING POSITIONS

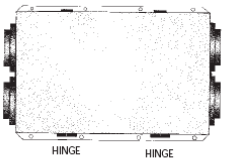

Figure 6a - Hinges on Bottom

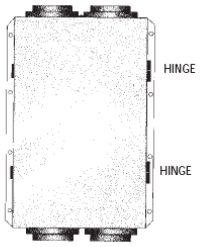

Figure 6b - Hinges on Right

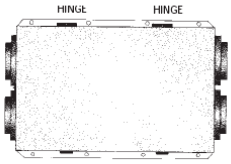

Figure 6c - Hinges on Top

NOT AN APPROVED MOUNTING POSITION

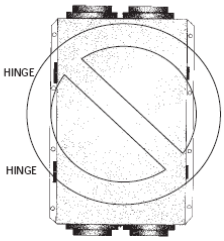

Figure 6d - Hinges on Left
Do not install in this position, as door will fall off when opened

INSTALLATION GUIDELINES

GENERAL GUIDELINES

1) Do operate the ERV independent of the indoor central heating and cooling blower system (furnace / air handler). Independent operation of the ERV allows the ERV to introduce the minimum required fresh air at all times of the year.
2) Do Not set up a control system that requires the indoor (furnace / air handler) blower for the heating and cooling system to operate (when in the cooling mode) when the ERV operates. Fan operation during the cooling mode without cooling occurring is not recommended under most circumstances and applications. Fan operation evaporates the condensed moisture (water) on the cooling coil and results in increased Relative Humidity inside the home. For exceptions and additional details, see the ERV Application Bulletin.
3) Humidifiers and ERV/HRV's. When the "fresh air" is ducted into the return duct and the system is to have a humidifier, install a "fan power humidifier." Do not install a by-pass humidifier, as it can freeze based on the installation, outdoor temperature and homeowner thermostat setback requirements.

APPROVED INSTALLATIONS

I) Separate Room Exhaust Air Pick-Up / Fresh Exchanged outside air to central system return air

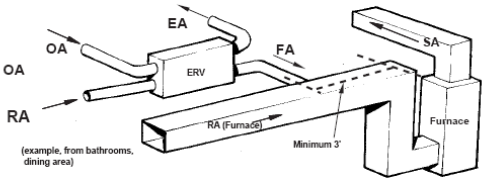

Figure 7

Legend
RA - Room Air
OA - Outside Air
FA - Fresh Air
EA - Exhaust Air
SA -Supply Air

Note: Entering mixed air temperature to furnace (furnace heating air) must be above 50°F (18°C) to prevent condensation in furnace heat exchanger.

II)Separate Return Air and Fresh Air Supply

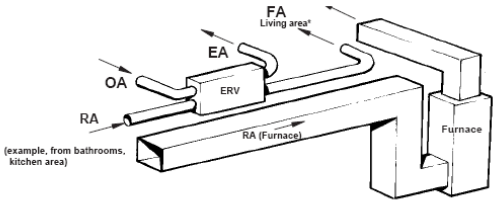

Figure 8

Note: Introduce fresh air where good mixing will occur to minimize discomfort to occupants.

NON APPROVED / NOT RECOMMENDED INSTALLATIONS

I)Exhaust Air and Fresh Air Ducted To System Return Air Duct

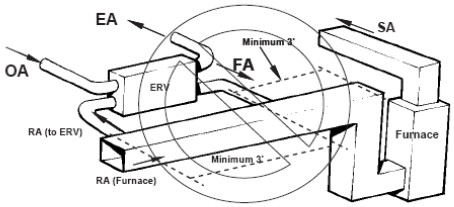

Figure 9

Note: Application requires indoor blower to be running when ERV runs. This is in violation of General Guideline #2 on page 3.

IV) EXHAUST AIR FROM RETURN DUCT / FRESH AIR DUCTED TO SUPPLY AIR DUCT

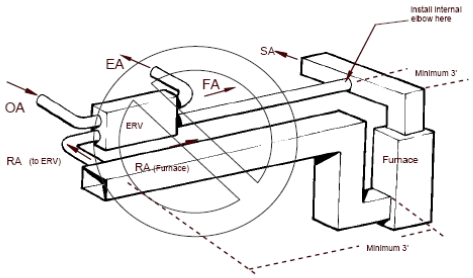

Figure 10

Note: Duct routing produces a negative pressure on Exhaust Air and Adds additional pressure on Fresh Air and can result in a greater than desired pressure difference and can make the house a negative pressure volume. If a vented gas appliance is within the home's envelope this duct application can cause flue gas backdrafting.

INSTALL DUCT COLLARS

Attach one each of four duct collars to the fresh air inlet and outlet, exhaust air inlet and outlet with the screws provided in the plastic small parts bag. **Use duct mastic or equivalent approved caulk to form seal around duct collar.** (Optional) See figure 11.

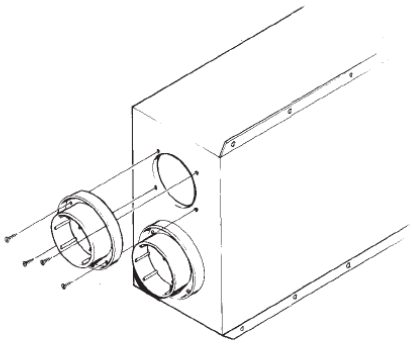

Figure 11

DUCTWORK INSTALLATION - ERV TO EXTERIOR WALL OUTLETS

⚠ CAUTION

Failure to follow this installation instruction may result in property damage from sweating ductwork.

The fresh air duct and exhaust air duct connect the ERV to the exterior wall outlet. Flexible or metal duct may be used. The fresh air and exhaust air duct must be insulated.

Keep the fresh air supply and exhaust duct roughly equal in length and as short and straight as possible. Typically, six (6) inch insulated flexible duct is used for the *ERVR100/200A9P00AA and eight inch for the *ERVR300A9P00AA. If using flexible duct band or tape the inner duct liner to the inner flange of appropriate collar. Drive a sheet metal screw through the liner to secure the duct spiral wire to the collar. Straighten insulation, and slide the outer duct jacket onto the outer flange of the duct collar. Secure with band or tape. The outer flange of the duct collar can be used for both the inner and outer jacket of eight (8) inch flexible duct. Care must be taken to insure that the duct is securely fastened and sealed to the duct collar.

If duct runs are exceedingly long (over 25 feet of duct for the *ERVR100 or 300 and over 15 feet for the *ERVR200) see the Air Conditioning Contractors Association of America's (ACCA) duct sizing manual "Manual D" to design the appropriate sized ductwork.

FRESH AND EXHAUST AIR INLET AND OUTLET INSTALLATION

⚠ WARNING

Failure to follow the installation instructions for location of the fresh air inlet and return air grilles could result in Carbon Monoxide Poisoning or Death.

The fresh air inlet should be at least ten feet away from any exhaust such as chimneys, furnace vents, water heater exhausts, dryer vents, driveways or other sources of carbon monoxide or contamination. Do not locate a fresh air inlet where vehicles may be serviced or left idling. Never locate the fresh air inlet inside a structure.

Do not install return air grilles (stale air return) in garages, or in the same room with any gas fired appliance; for example a gas fired furnace, gas fired water heater, gas dryer, etc.
Do not connect ERV ductwork to kitchen vent hoods
Do not connect a dryer directly to an ERV

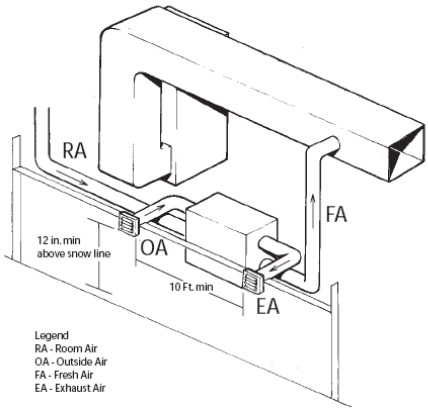

Figure 12

The exhaust outlet and fresh air inlet on the outside of the building ***should be at least ten (10) feet apart*** to avoid cross contamination.

The Outdoor fresh air inlet ***must be located a minimum of 10 feet from any other exhaust vent, gas meter, outdoor grill, or source of open flame.***

Fresh air inlets must also be located a minimum of ten (10) feet from oil tank fill tubes, garbage cans and any other source of contamination. Fresh air inlet and outlets should not be installed in areas of stagnant air. Fresh air inlet and outlet hoods should be located a minimum of twelve (12) inches above the normal snow level.

⚠ CAUTION

Failure to follow installation instructions may lead to premature failure of the heat transfer core.

The ERV fresh air inlet and return air grilles must not be located in the same room as an indoor swimming or exercise "lap" pool.

Determine outlet locations. Cut correct size hole. Cut a short piece of 6" round duct to connect to the fresh air inlet and exhaust air outlet hoods. For Model *ERVR100 or *ERVR200. Use 8" round duct for Model *ERVR300. Secure duct to inlet and outlet hood duct collars with installer supplied fasteners. Install hood and ductwork through penetration. See figure 13 for sealing duct penetration and duct collar.

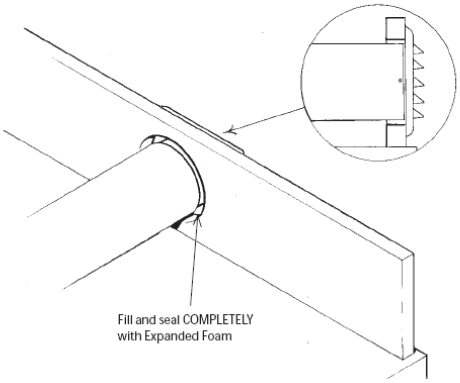

Figure 13

DUCTWORK CONNECTING ERV TO INDOOR TERMINATION POINTS

⚠ CAUTION

Failure to follow this installation instruction may result in property damage from sweating ductwork.

Insulate all connecting ductwork from the ERV to any indoor termination point that will be subject to forming condensation. Flexible or metal duct may be used.

An ERV can be applied either with an independent free standing fresh and return air duct system or the fresh air supply can be connected to the cooling and heating system return air duct. The following guidelines should be considered when applying and installing either duct system.

FRESH AIR DUCT CONNECTION TO THE COOLING AND HEATING SYSTEM RETURN AIR DUCT

The Fresh Air Supply duct from the ERV should be connected a minimum of three (3) feet up stream of the indoor unit return plenum. (See Figure 7)
A connection closer than three 3 foot may result in unbalanced airflow. Use a minimum of 5 foot section insulated flexible duct to connect the ERV port labeled "Fresh Air To Inside" to the return air duct.

FREE STANDING DUCT SYSTEM

For free standing ERV duct systems one or two fresh air grilles located in a central part of the house will provide effective distribution of the fresh air into the home particularly when the air to be exhausted from the home is returned from several points. Use a minimum of 5 foot

insulated flexible duct from the ERV port labeled "Fresh Air To Inside" to the point of termination.

During winter, since fresh air is unconditioned, the fresh air supply grilles should be located in a traffic area like a hallway or stairway rather than in a sitting area. Locate fresh air supply register within 12 inches of the ceiling on an inside wall pointing the register louvers toward the ceiling.. If fresh air is desired in specific rooms with high occupancy the fresh supply air can be split among the additional rooms.

RETURN AIR FROM HOUSE

Locate return air grilles in rooms where moisture and odors are generated. Preferred locations for returns are bath rooms, kitchens and hallways. Return grilles should be installed within 12 inches from the ceiling on an inside wall. Do not use returns to vent cooking areas. Do not connect returns to a vent hood.

ELECTRICAL CONTROLS

⚠ WARNING

Hazardous Voltage – Disconnect Power Before Servicing

Note: Proper Wiring Size Selection and Wiring Installation Is The Responsibility of the Electrical Contractor.

Controls

A percent timer (PT) control is included in the box with the ERV. This is the primary control for operation of the ERV. After startup, the PT control will operate the ERV automatically. The PT control should be set by the installing dealer.

To assist the dealer in determining the PT control setting a ventilation calculator is available from your local distributor. MicroSoft Excel is required to run this program. The calculator input can accept a minimum ventilation airflow requirement per local code or calculate the minimum airflow required per ASHRAE 62.2-2004.

In addition to the PT control some installations may include Push Button (PB) or point of use control(s). The PB controls are typically located in bathrooms or areas where exhaust ventilation is required for short periods of time. PB controls are wired in parallel to the PT controls and energize the ERV whenever there is a manual call for ventilation.

PERCENT TIMER CONTROL (PT)

The Percent Timer Control automatically energizes and de-energizes the energy recovery ventilator every hour, ensuring ventilation for the home around-the-clock. The PT control has two status lights . One is the power light located in the upper left hand corner of the control. The other is the Runtime % light. The power light is on whenever the PT control is calling for the ERV to run. The Runtime % light is located on the right side of the control. The Runtime % light indicates the amount of time per hour the ERV will operate. Set the control per your local code or ASHRAE Std 62.2 and your ventilator will run once every hour.

FOR CONSTANT OPERATION: Press the fan icon until the 100% light is on. The "Runtime %" light turns on. The ERV unit will run continuously.

FOR MINIMUM VENTILATION REQUIREMENT OPERATION: Set the control at the percentage that meets local code or ASHRAE 62.2. Press the fan icon until the light for the percent desired is on.

TO TURN THE ERV OFF: Press the fan icon until all lights are off. The control is off. The ERV motor is de-energized. (Power is still persent inside the unit. Always unplug cord from outlet before servicing!)

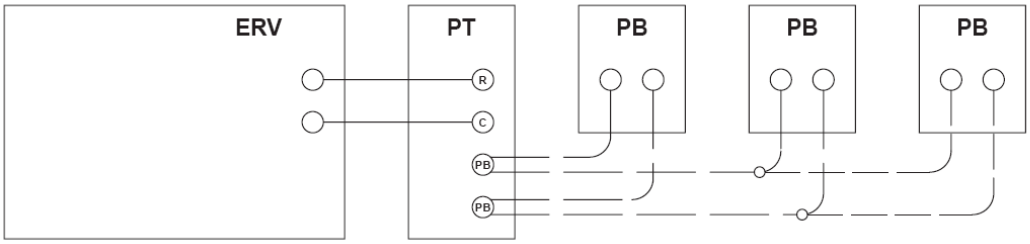

(2) PB controls can be directly connected to the PT control
Up to (6) PB controls, wired in parallel, may be used.

Figure 14

NOTE for ERV systems with more than one control:
Another control may be causing your ventilator to run - even if the runtime % light on this control is off. If you wish to keep your ventilator from running, check that none of your controls are calling for unit operation.

INSTALLATION

1. Install control in a standard 2" x 4" electrical box, with a minimum depth of 1.5", with the two screws provided.
2. Wire Size: 18 gauge, no more than 500 feet. Wiring is non-polar.
3. The two wires from the ERV should be attached to the 'C' and 'R' positions on the terminal block on the back of the PT Control. See Figure 13.
4. Use Lutron Decora™ cover plate to complete the installation (supplied by installer).

Push Button Point-of-use Control (Optional Accessory)

For use with all ERV models

OPERATION

The Push Button (PB) Point-of-use Control lets you manually turn on your energy recovery ventilator for a short period of operation – for example, when you are using a bathroom. The PB Control must be connected to a PT control to operate.

20-40-60 MINUTE VENTILATION CONTROL:

Press the fan icon and your ventilator will run for 20 minutes. Press again and the unit will run 40 minutes. A third press provides for 60 minutes of operation. Percent Timer Control does not need to be on for the PB Control to operate the ERV unit.

You can cancel a cycle at anytime. Just press the logo and hold for about five seconds.

You can start another cycle by pressing the logo.

NOTE FOR ERV SYSTEMS WITH MORE THAN ONE CONTROL:

Another control other than the push button may be causing your ventilator to run. If you wish to keep your ventilator from running, check that none of your controls are calling for unit operation.

INSTALLATION

4. Install control in a standard 2" x 4" electrical box, with a minimum depth of 1.5", with the two screws provided.
5. Wire Size: 18 gauge, no more than 500 feet. Wiring is non-polar.
6. Two wires from the PB Control should be attached to the 'PB' positions on the terminal block on the back of the Percent Timer Control.
7. For two PB controls, one wire from each can be twisted together and inserted into a single position on the terminal block on the Percent Timer Control. The wires must be a 18 gage solid wire. If more than two PB controls are attached or 18 gage stranded wire is used then pigtails must be inserted into the 'PB' positions on the Percent Timer Control and the leads attached to the pigtails with wire nuts.
8. Use Lutron Decora™ cover plate to complete installation.

Installer's Guide

START-UP AND CHECK OUT PROCEDURE

1. Make sure power is disconnect by unplugging electrical cord.
2. Check field-supplied control wiring to insure proper installation and that all connection are tight.
3. Check field-supplied power supply for proper voltage
4. Make sure that unit is securely mounted or suspended and that there are no tools or loose debris in, around or on top of the unit
5. Check all duct connection to insure they are sealed
6. Check all duct outlets. All outlets must be open
7. Check unit filters.
8. Close unit door – plug in unit.
9. Turn all controls to off
10. Set timer to 10 %; unit should start and run for approximately six minutes.
11. Go to outside of building and check for airflow at inlet and outlet hoods. Check that weatherhood screens are in place and clean. Make sure that the intake hood is positioned away from any exhausts or other sources of pollutants. **The quality of the introduced fresh air is the most important function of this system!**
12. If the unit has a push-button timer installed press it one time after the unit has cycled off from the percentage timer's cycle. Unit should run twenty minutes and then cycle off.
13. Set percent timer to recommended percentage. (See application guide) Place peel & stick dot on the face of the percentage timer to indicate percentage proper setting.
14. Instruct end user on proper operation procedures and leave use and care manual with them.

23 06 80 Schedules for Decentralized HVAC Equipment

23 06 80.13 Decentralized Unitary HVAC Equipment Schedule

A centralized rooftop unit will be connected both to the Outdoor HX Array and the Indoor HX Array and perform the compression, expansion and reversing functions. It will be mounted to on U-strut steel beams that are attached to opposing parapets in space available, regardless of solar array position.

Thermostatic Expansion Valves (TXV) will be used to achieve expansion. This requires a temperature sensing bulb be attached to the outlet of the evaporator, whichever array it may be. Due to the large pressure drop across the heat exchanger arrays, it must be externally equalized via a pressure tab to the same location. To accomplish this, a separate TXV is employed for each mode, heating or cooling, along with Check valves to ensure that only the proper valve is in use. To change modes, an electric reversing valve is also provided to direct the discharge from and return to the compressor properly.

The compressor is equipped with two safety devices. The temperature cutoff switch is attached to the compressors and cuts off below 200 °F, which, for R-22, corresponds to a pressure of 671.5 psig. A pressure relief valve set to 500 psig will also be supplied at the compressor discharge. The system will not be designed to operate at temperatures over 400 PSI.

See the following figure for refrigerant circuit. See the table on the following page for components descriptions.

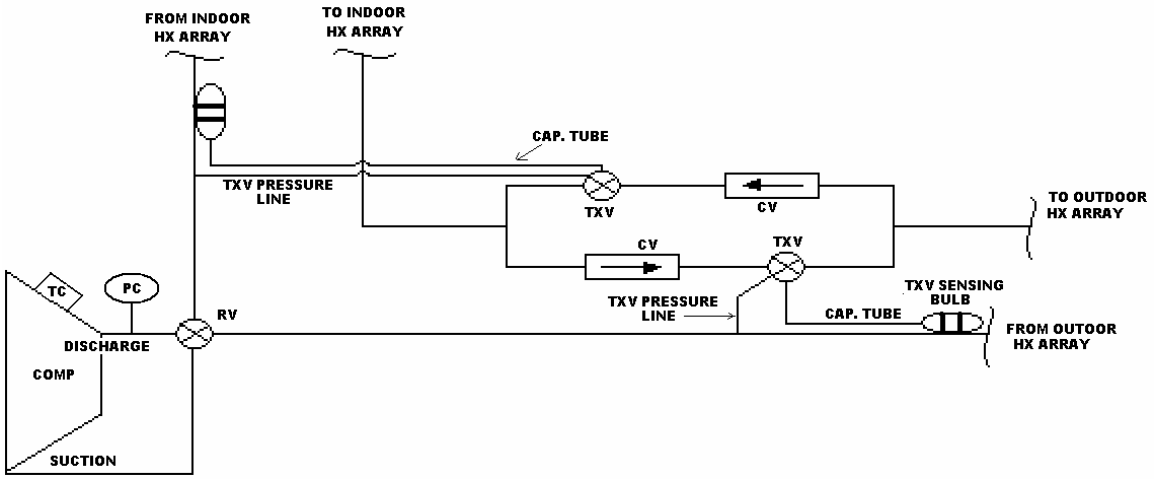

Item	Description	Physical Characteristics	Safe Working Pressure / Temperature at which SWP applies	Source of Data
Piping to connect components	3/8" ACR Soft Copper Tube	OD = 3/8" ID = 0.311"	787 PSI / 250 °F	http://www.copper.org/resources/pub_list/pdf/copper_tube_handbook.pdf
Piping to connect components and TXV pressure line	1/4" ACR Copper Tube	OD = 1/4" ID = 0.19"	1125 PSI / 250 °F	http://www.copper.org/resources/pub_list/pdf/copper_tube_handbook.pdf
Piping to connect components to TXV	1/2" ACR Soft Copper Tube	OD = 1/2" ID = 0.436"	594 PSI / 200 °F	http://www.copper.org/resources/pub_list/pdf/copper_tube_handbook.pdf
TXV including cap-tube and sensing bulb	Danfoss Product no. 068Z7394	ID = 1/2" ID = 1/2" ID = 1/2" 5 ft.Cap Tube Length	500 PSI	www.danfoss.com
T, Reducer, Union-Cross and Elbow where open flame is permissible.	Forged Pipe fittings with BCuP-2, 3, 4 or 5 brazing metal.	Melting Ranges within 1300 °F and 1550 °F	Meet or exceed tube strength	http://www.copper.org/resources/pub_list/pdf/copper_tube_handbook.pdf
T, Reducer, Union-Cross and Elbow where open flame is not permissible.	Swagelok compression fittings (3/8"-1/4" reducer union, 3/8"-3/8" union, elbow and cross union)	ID = 3/8" ID = 1/4"	800 PSI / 200 °F	http://www.swagelok.com/downloads/webcatalogs/EN/MS-01-107.PDF
Joining 1/4" ACR Copper Tube to Wire-and-Tube Heat Exchangers	3/8" - 1/4" Brass Swagelok Compression Fittings	ID = 3/16" ID = 3/4"	800 PSI / 200 °F	http://www.swagelok.com/downloads/webcatalogs/EN/MS-01-107.PDF
CV	Danfoss Product no. 020-1012	ID = 1/2" ID = 1/2"	667 PSI	www.danfoss.com
Compressor	R-22 Compressor from Whirlpool ACD052PS Window unit Air Conditioner	5200 BTU/hr Cooling Capacity	N/A	www.whirlpool.com
PC	Swagelok Relief Valve Product no. SS-4R3A	ID = 1/4" ID = 1/4"	50-6000 psi set pressure	http://www.swagelok.com/search/product_detail.aspx?part=SS-4R3A
RV	Emmerson Reversing Valve SHF-11	OD = 5/16" OD = 1/2" OD = 1/2" OD = 1/2"	680 PSI	SanHau Refrigeration Group, 2003, "Components for Refrigeration and Air Conditioning"

Product Data for Danfoss 068Z7394:

characteristic	value
Type	TX 2
Weight	0.355 Kg
Capillary tube length	5,0 ft
Capillary tube length [mm]	1.500 mm
Connection type (I/O/E)	Flare/Solder
Direction	Angleway
Inlet connection type	Flare
Inlet size [in]	1/4 in R
Max. Working Pressure ef	34,0 bar
Max. Working Pressure	500 psig
Orifice capacities [kW]	2,50 kW
Orifice capacities [TR]	0,70 TR
Orifice size	01
Outlet connection type	Solder
Outlet size [in]	1/2 in
Pack format	Multi pack
Quantity per pack format	20 pc
Refrigerant(s)	R22
Static Superheat (SS)	5,0
Static Superheat (SS) [°F]	9,00 °F
Temperature range [°C]	-40 - 10 °C
Temperature range [°F]	-40 - 50 °F

Product Data for Danfoss 020-1012:

characteristic	value
Type	NRV 12
Weight	0.100 Kg
Approval	UL
Direction	Straightway
Inlet connection type	SOLDER ODF
Inlet size [in]	1/2 in
Kv-value [m³/h]	2,050
Max. Working Pressure ef	46,0 bar
Max. Working Pressure	667 psig
Min. Pressure drop [bar]	0,05 bar
Outlet connection type	SOLDER ODF
Outlet size [in]	1/2 in
Pack format	Multi pack
Quantity per pack format	24 pc

23 06 80.16 Convection Heating and Cooling Unit Schedule

Indoor Exchange Array:

The Indoor Exchange Array consists of 6 Indiana Tube 241785201 (Data Sheets Below) wire-and-tube heat exchangers (WTX) hooked up in parallel according to the figure below. The indoor exchanger arrays should be set horizontally 7 inches from the ceiling and connected using the compression fittings and tubing specified in section 23 06 20. See Drawing M1.02 for indoor arrangement and roof-puncture locations.

It is essential that the tube surface has line-of-sight access to the conditioned space for radiant transfer. Airflow across the tubes should also be minimally obstructed for convective contribution.

Outdoor Exchange Array:

The Outdoor Exchange Array consists of 6 Indiana Tube 241785201 (datasheets below) WTX's mounted to the back of the solar collector array structures according the circuit diagram presented below. Rubber-Cushioned straps (McMaster-Carr, Model number 3225T2) should be used to mount the WTX's collectors to the wooden structure, with blocking as required to keep them at least 2 inches away from any surface. This offset will ensure proper air-flow over the WTX.

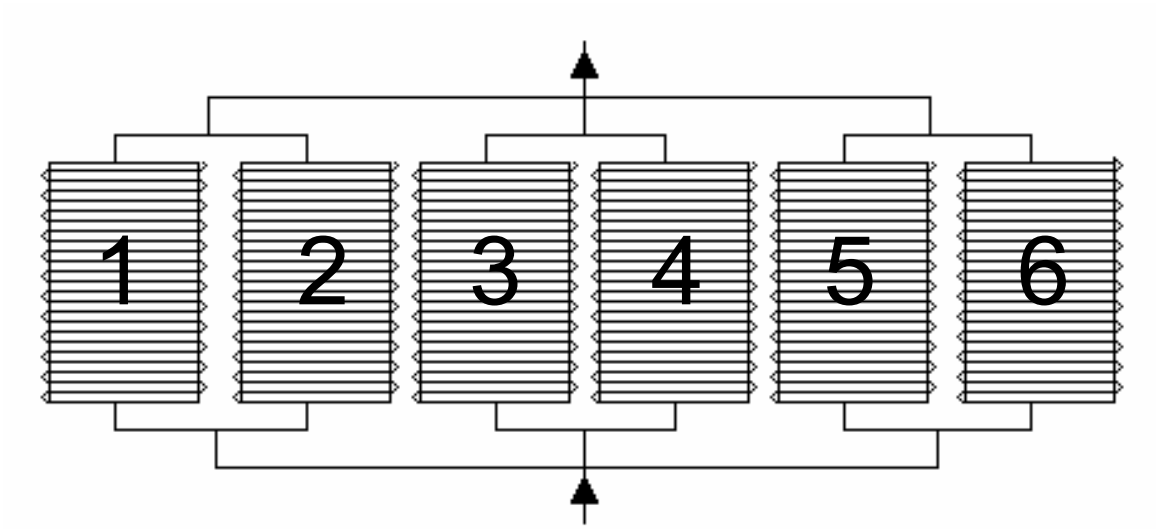

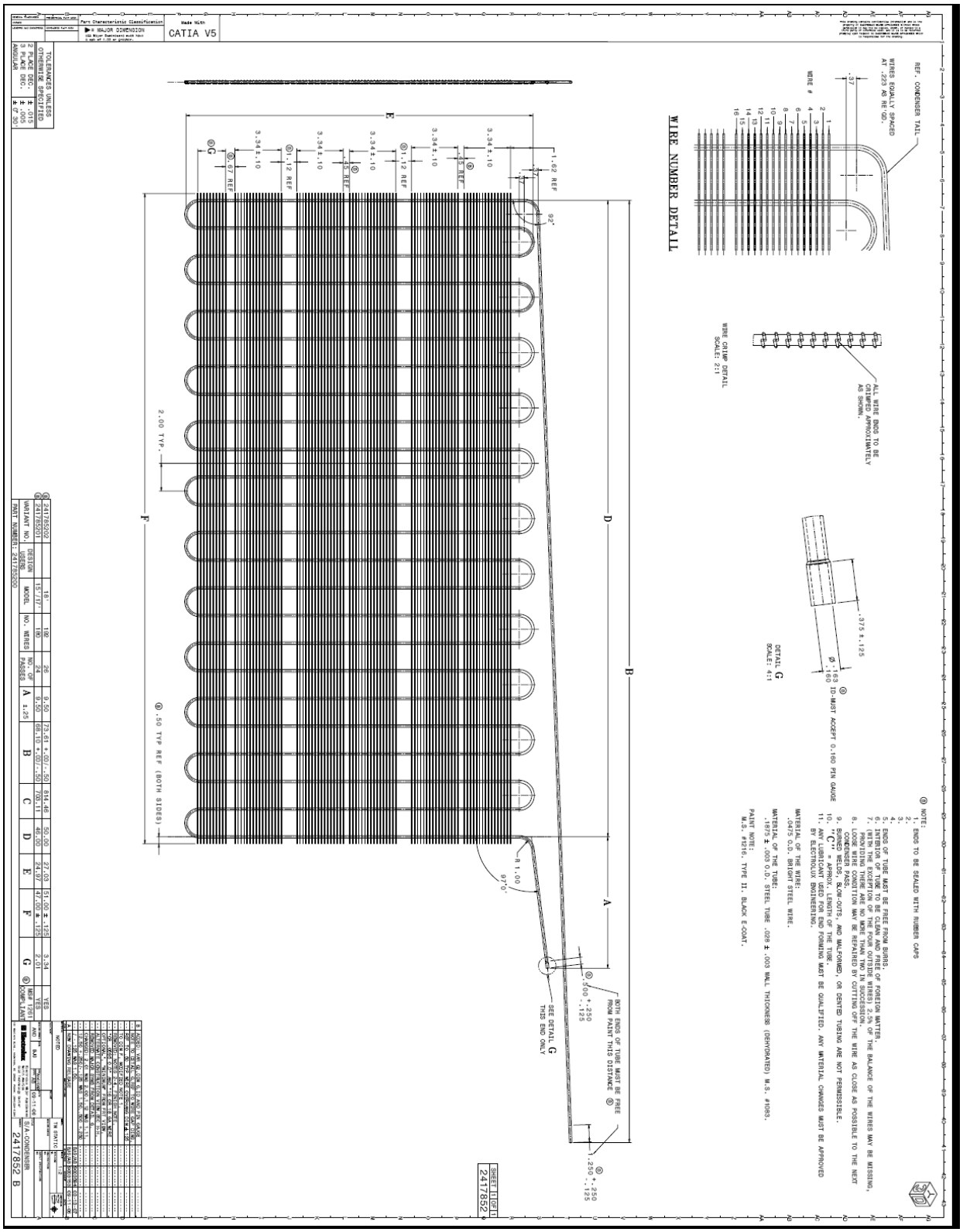
Made With
CATIA V5
REF. CONDENSER TAIL
WIRES EQUALLY SPACED AT .223 AS RE'QD.
WIRE #
WIRE NUMBER DETAIL
ALL WIRE ENDS TO BE ALIGNED APPROXIMATELY AS SHOWN.
WIRE CRIMP DETAIL
SCALE: 2:1
DETAIL G
SCALE: 4:1
.375 ±.125
Ø .103 .160 ID-MUST ACCEPT 0.160 PIN GAUGE
NOTE:
1. ENDS TO BE SEALED WITH RUBBER CAPS
5. ENDS OF TUBE MUST BE FREE FROM BURRS.
6. WITHIN ANY TWO (2) CONSECUTIVE PORTION WITHIN THE EXCEPTION OF THE FOUR OUTSIDE WIRES) 2.5% OF THE BALANCE OF THE WIRES MAY BE MISSING, PROVIDING THERE ARE NO MORE THAN TWO IN SUCCESSION.
7. LOOSE WIRE CONDITION MAY BE REPAIRED BY CUTTING OFF THE WIRE AS CLOSE AS POSSIBLE TO THE NEXT GOOD WELD.
8. LOOSE WELDS, BLOW-OUTS, AND MALFORMED, OR DENTED TUBING ARE NOT PERMISSIBLE.
9. BURNED WELDS, BLOW-OUTS, AND MALFORMED, OR DENTED TUBING ARE NOT PERMISSIBLE.
10. "C" = APPROX. LENGTH OF THE TUBE.
11. ANY LUBRICANT USED FOR END FORMING MUST BE QUALIFIED, ANY MATERIAL CHANGES MUST BE APPROVED BY ELECTROLUX ENGINEERING.
MATERIAL OF THE WIRE:
.0475 O.D. BRIGHT STEEL WIRE.
MATERIAL OF THE TUBE:
.1875 ± .003 O.D. STEEL TUBE .029 ± .003 WALL THICKNESS (DEHYDRATED) M.S. #1093.
PAINT NOTE:
M.S. #1216, TYPE II, BLACK E-COAT.
WITH ENDS OF TUBE MUST BE FREE FROM PAINT THIS DISTANCE
SEE DETAIL G THIS END ONLY
R1.00 .970
.500 +.250 -.125
.259 +.250 -.125
.50 TYP REF (BOTH SIDES)
2.00 TYP.
1.62 REF
.37
.92
3.34±.10
.45 REF
1.12 REF
.67 REF
TOLERANCES UNLESS OTHERWISE SPECIFIED
2 PLACE DEC: ± .015
3 PLACE DEC: ± .005
ANGULAR ± (2°30')
24178520/2
24178520/1
DESIGN
MODEL
NO. WIRES
NO. OF PASSES
A ±.25
B
C
D
E
F
G
180
24
9.50 9.50
178.61 +.01/-.50 68.10 +.01/-.50
814.46 709.11
50.00 46.00
27.03 24.97
51.00 ±.125 47.00 ±.125
3.34 2.01
YES REF 1201
VARIANT NO.
PART NUMBER: 24178520
SHEET 1 OF 1
2417852
S.A.-CONDENSER
2417852 B

SHERRYLaboratories
Testing Today – Protecting Tomorrow

Tulsa Materials
3100 North Hemlock Circle
Broken Arrow, OK 74012-1115 USA

Tel: 918-258-6066
800-982-8378
Fax: 918-258-1154

LABORATORY REPORT

Attn: Dana Harrison
Indiana Tube Corporation
2100 Lexington Ave.
Evansville, IN 47720

Report No.: **06080081-001-v1**
Date Received: **8/2/2006**
Date Reported: **8/3/2006**
P.O. No.: **verbal DH**

Sample Description: 3/16" Diameter Tubing

We have completed the hydrostatic pressure testing of the 3/16" diameter steel tubing. The client identified the tube as No. 25688.

Test conducted

The tubing was filled with water and the hydrostatic pressure was then increased to 18,400 psi. At that pressure test fixture leaked.

Conclusion

The 3/16" diameter steel tubing held at a pressure of 18,400 psi without leakage or visible deformation.

Note: The material will be discarded after thirty (30) days from the date of this report unless otherwise directed.

Approved: W. Don Bunn
W. Don Bunn, PE
Project Engineer

23 09 00 INSTRUMENTATION AND CONTROL FOR HVAC

23 09 13 Instrumentation and Control Devices for HVAC

23 09 13.13 Actuators and Operators

The Echoflex control boxes will be programmed with the algorithms presented in section 23 09 93 and will accept signals from Thermokon thermostats and humidistats. Each of the three autonomous radiant heat pump systems will have one thermostat, which will send periodic temperature data and data concerning the mode selected by the user (heating or cooling) to the control box. The control box will then switch 24 VAC switches to control the power to the compressor and reversing valve. A separate humidistat will be provided for whole-house control and a corresponding Echoflex control box will switch 24 VAC to control the power to the stand-alone dehumidifier.

All electrical relays, switches and control boxes will be located in non-metal NEMA boxes approved for indoor use. Nema box will be mounted above drop-soffit in each module.

Because of the all-radiant nature of the heat exchanger panels, the surface cannot get cooler than local dewpoint; so an additional cutoff protection switch is achieved through a hard-wired Honeywell Tradeline Humidistat, which can pass a 24 VAC signal to a relay that, if humidity exceeds an unacceptable value, will cut compressor power off. This will allow time for the house dehumidifier to "catch up" and allow the cooling system to resume.

Wiring Schematic for Sensible Conditioning Controller

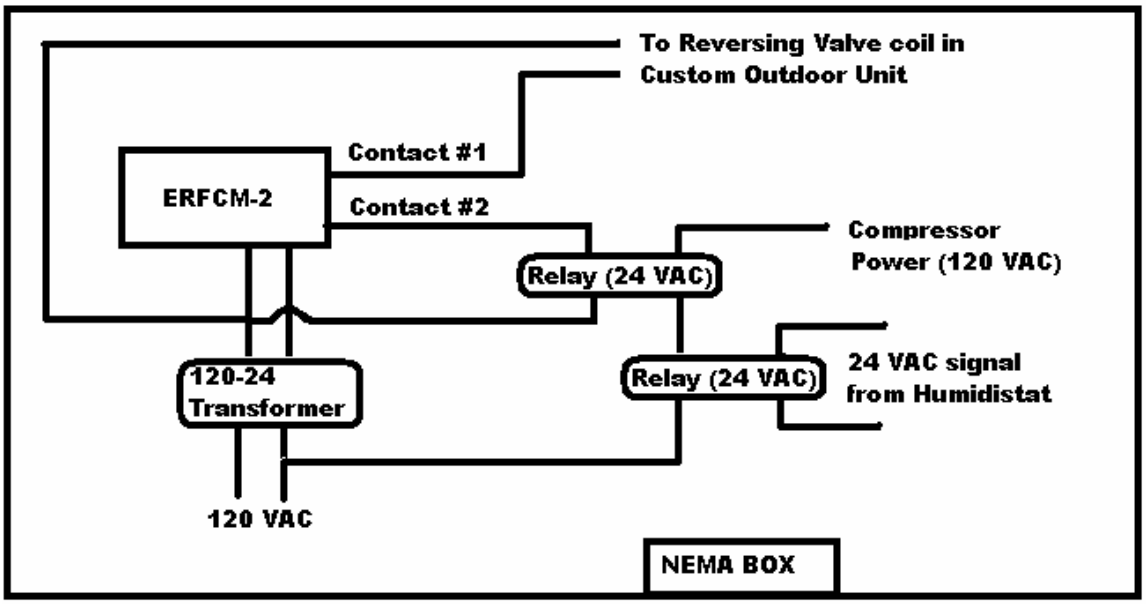

Wiring Schematic for Dehumidifer Controller

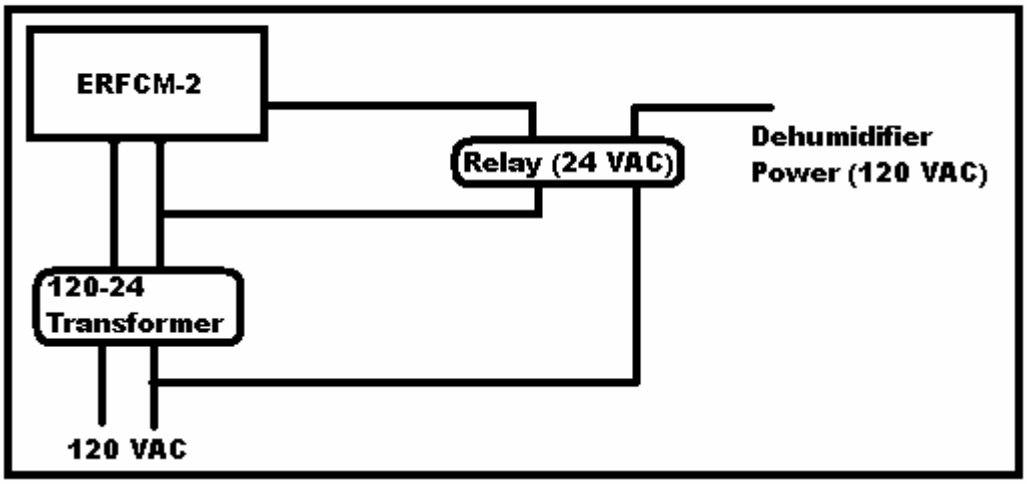

FURNACE CONTROL SOLUTION

echoflex solutions

Description

Echoflex solutions has a solution for furnace control. When heat or chilliness is being sensed from the wrong area or when you would like control but the wired solution is costly. Using the Echoflex furnace controller makes it easy, saves money and time. Utilizing a self powered wireless thermostat means no wires and no maintenance. Easily installed and programmed control is only minutes away. Add more sensor locations and get control through processing. Our control unit can average your thermostat's or listen to the last one touched. Easily programmed, easily installed. Optional outputs can be used for heat control, air conditioning control or fan control. Get control and save money.

Features and Technical Overview

Power supply: .....24VAC or 24VDC
Function outputs: .....1 to 4 isolated form A contacts
Antenna: .....Integrated 9cm whip antenna
Frequency:/Channel Bandwidth/sensitivity: ..... 868Mhz / 280Khz / -95dbm
Control Inputs: .....Learn and Clear Buttons for switch assignment
Optional Inputs:.....2 opto isolated inputs
Control Outputs: ..... Power Indicator, Status LED and Learn Mode LEDs
Dimensions: ..... 88mm L x 48mm W x 48mm D
Mounting: .....mounts in a standard ½" knockout
Operating Temperature: .....-10° to +45°C
Storage Temperature: .....-20° to +80°C
This radio receiver is CE certified and conforms to the R&TTE EU-Directive on radio equipment. The EnOcean 868 MHz radio technology can be approved for operating in the USA and in Canada

Model	Description
ERFCM- 1,2,4	Furnace controller with 1, 2 or 4 outputs
SR04 series	Self powered thermostat (see website)
SR07 series	Self powered thermostat (see website)

www.echoflexsolutions.com

echoflex solutions

Integration: Brian Aikens
(604)815-0091
brian_a @shaw.ca

ECHO CONTROLS

solutions: Shawn Pedersen
(604)815-0092
shawn_p@echoflexsolutions.com

23 09 13.23 Sensors and Transmitters

Thermokon Thermostats (SR07PS rws) and Humidistats (SR04PT rH) will send the necessary data to the Echoflex controllers. These thermostats require no power and will be mounted on a mobile stand for maximum user-control.

For the humidity cutoff control to avoid going below dewpoint for the sensible conditioning, a Honeywell Tradeline H46 Dehumidifier Controller will be used to pass a 24 VAC signal to the sensible conditioning controller box.

Datasheets of the SR07PS and SR04PT are given on the following pages.

SR07

Universal Einsatz - Funk Raumfühler
Universal Insert - Wireless Room Sensor

thermokon
Sensortechnik GmbH

DE - Datenblatt

Technische Änderungen vorbehalten
Stand 06.03.06

EN - Datasheet

Subject to technical alteration
Issue date 06.03.06

26000...

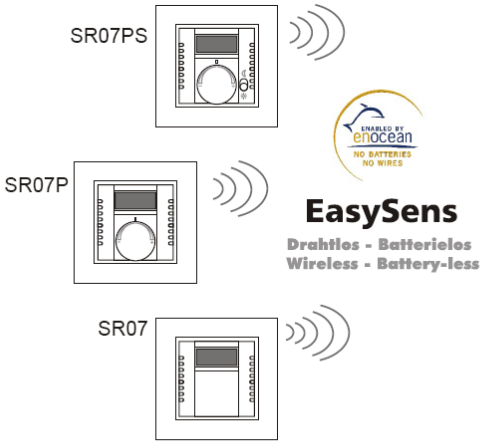

Anwendung

Der Raumfühler dient zur Temperaturerfassung oder lokalen Sollwertverstellung bei Einzelraumregelungen im Gebäude.
Dabei sendet der Fühler seine Messwerte batterielos an entsprechende Empfänger (SRC-x), die wiederum die Informationen weiterverarbeiten bzw. je nach Ausführung einer zentralen Regeleinheit zur Verfügung stellen.
Je nach Typ besitzt der Fühler neben dem integrierten Temperatursensor auch einen Drehknopf zur Sollwertverstellung bzw. ein Schiebeschalter mit zwei Schaltstellungen.
Mit verschiedenen Zwischenrahmen lässt sich der Raumfühler-Einsatz in viele Schalterprogramme aus dem Hausinstallationsbereich integrieren. Zudem kann er in Mehrfachrahmen mit der EnOcean Schalterserie "Easysfit" kombiniert werden.

Kompatibel zu folgenden Designs mit 55mm x 55mm Einsätzen:

- PEHA Aura
- BERKER S1, B1, B3, B7 Glas
- GIRA Standard55, E2, Event, Esprit
- JUNG A500, Aplus
- MERTEN M-Smart, M-Arc, M-Plan

Application

The room sensor is designed for temperature detection or local set point adjustment with single room controls in buildings. The sensor transmits its measuring values battery-less to the corresponding receivers (SRC-x) which are processing the information respectively placing the same to the disposal of a centralized control unit, depending on the type of receiver.

In addition to the integrated temperature sensor, the sensor has, depending on the device, a rotary button for set point adjustment respectively a slide switch with two switching steps.
By means of different intermediate frames, the room sensor insert can be integrated in many switch programs of the indoor installation range. Additionally, it can be combined with multi frames of the EnOcean switch series "Easyfit".

Compatible to the following designs with 55mm x 55mm inserts:

- PEHA Aura
- BERKER S1, B1, B3, B7 Glas
- GIRA Standard55, E2, Event, Esprit
- JUNG A500, Aplus
- MERTEN M-Smart, M-Arc, M-Plan

Typenübersicht

SR07 rws	Funkfühler, Farbe reinweiß
SR07P rws	Funkfühler mit Sollwertsteller, Farbe reinweiß
SR07PS rws	Funkfühler mit Sollwertsteller, Schiebeschalter Nacht/Tag, Farbe reinweiß
SR07 an	Funkfühler, Farbe anthrazit
SR07P an	Funkfühler mit Sollwertsteller, Farbe anthrazit
SR07PS an	Funkfühler mit Sollwertsteller, Schiebeschalter Nacht/Tag, Farbe anthrazit
SR07 alu	Funkfühler, Farbe aluminium
SR07P alu	Funkfühler mit Sollwertsteller, Farbe aluminium
SR07PS alu	Funkfühler mit Sollwertsteller, Schiebeschalter Nacht/Tag Farbe aluminium

Types available

SR07 rws	Wireless Sensor, colour pure white
SR07P rws	Wireless Sensor with setpoint adjustment, colour pure white
SR07PS rws	Wireless Sensor with setpoint adjustment, slide switch night/day, colour pure white
SR07 an	Wireless Sensor, colour anthracite
SR07P an	Wireless Sensor with setpoint adjustment, colour anthracite
SR07PS an	Wireless Sensor with setpoint adjustment, slide switch night/day, colour anthracite
SR07 alu	Wireless Sensor, colour aluminium
SR07P alu	Wireless Sensor with setpoint adjustment, colour aluminium
SR07PS alu	Wireless Sensor with setpoint adjustment, slide switch night/day, colour aluminium

Thermokon Sensortechnik GmbH - www.thermokon.de - email@thermokon.de

Technische Daten

Technologie:	EnOcean, STM100	
Sendefrequenz:	868,3 MHz	
Reichweite:	ca. 30 Meter Gebäude, ca. 300m Freifeld	
Temperaturerfassung:	Bereich	0°C...+40°C,
	Auflösung	0,15K
	Abs.Genauigkeit	typ. +/-0,4K
Sollwerterfassung:	Bereich	0...270° Drehwinkel
	Auflösung	1,1°
Schiebeschalter:	Anzahl Schaltstufen	2
	(z.B. Nacht/Tag)	
Messwerterfassung:	alle 100 Sekunden	
Sendeintervall:	...alle 100 Sekunden wenn Änderungen >0,8K, oder >3°Drehwinkel, oder Schiebeschalter	
	...alle 1000 Sekunden wenn Änderungen <0,8K, oder <3°Drehwinkel	
Energiegenerator:	Solarzelle, interner goldcap, wartungsfrei	
Gehäuse:	PC, Farben reinweiß, anthrazit, alu	
Schutzart	IP20 gemäß EN60529	
Umgebungstemperatur:	-25...65°C	
Transport:	-25...65°C / max. 70%rF, nicht kond..	
Gewicht:	45g	

Technical Data

Technology:	EnOcean, STM100	
Transmitting frequency:	868,3 MHz	
Transmitting range:	approx. 30m in buildings, approx. 300m upon free propagation	
Temperature detection:	Range:	0°C…+40°C
	Resolution:	0,15K
	Absolute accuracy:	typ. +/-0,4k
Set point adjustment:	Range:	0…270° angle of rotation
	Resolution:	1,1°
Slide switch:	Number of switching steps	2
	(e.g. night/day)	
Measuring value detection:	every 100 seconds	
Sending interval:	…every 100 seconds ifi changes >0,8K, or >3° angle of rotation, or switch step	
	…every 1000 seconds if changes <0,8K, or <3° angle of rotation,	
Energy generator:	Solar cell, internal goldcap, maintenance-free	
Housing:	PC, colour pure white, anthracite, alu	
Protection:	IP20 according to EN60529	
Ambient temperature:	-25…+65°C	
Transport:	-25…+65°C/ max. 70%rH, non-condensed	
Weight :	45g	

Abmessungen (mm)

Dimensions (mm)

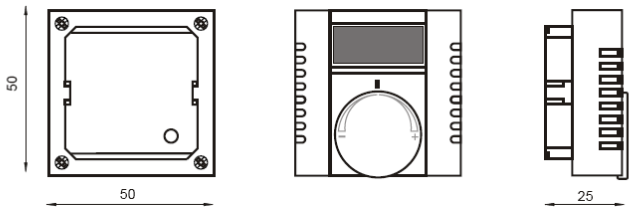

Normen und Standards

CE-Konformität: 89/336/EWG Elektromagnetische Verträglichkeit
R&TTE 1999/5/EC Radio and Telecommunications Terminal Equipment Directive

Standards: ETSI EN 301 489-1: 2001-09
ETSI EN 301 489-3: 2001-11
ETSI EN 61000-6-2: 2002-08
ETSI EN 300 220-3: 2000-09

Die allgemeine Zulassung für den Funkbetrieb gilt für alle EU-Länder und für die Schweiz.

FCC ID: S3N-SRXX
Dieses Gerät ist in Übereinstimmung mit Part 15/FCC Rules.

Der Betrieb unterliegt den folgenden Bestimmungen:
(1) das Gerät darf keine schwerwiegenden Störungen verursachen und
(2) das Gerät muss sicher gegen Störungen sein, speziell gegen Störungen, die ein Fehlverhalten des Gerätes verursachen.

Achtung: Änderungen oder Modifikationen des Gerätes, welche nicht ausdrücklich von Thermokon genehmigt sind, führen zur Aufhebung der FCC Betriebs-Zulassung

Norms and Standards

CE-Conformity: 89/336/EWG Electromagnetic compatibility
R&TTE 1999/5/EC Radio and Telecommunications Terminal Equipment Directive

Standards: ETSI EN 301 489-1: 2001-09
ETSI EN 301 489-3: 2001-11
ETSI EN 61000-6-2: 2002-08
ETSI EN 300 220-3: 2000-09

The general registration for the radio operation is valid for all EU-countries as well as for Switzerland.

FCC ID: S3N-SRXX
This device complies with Part 15 of the FCC Rules.

Operation is subject to the following two conditions:
(1) this device may not cause harmful interference, and
(2) this device must accept any interference received, including interference that may cause undesired operation.

Warning: Changes or modifications made to this equipment not expressly approved by Thermokon may void the FCC authorization to operate this equipment.

Auswahl des Montageorts für Solar Energiespeicher

Bei der Auswahl des Montageortes in Bezug auf korrekte und ausreichende Umgebungshelligkeit sind folgende Vorgaben einzuhalten.

Durch die Verwendung der energieoptimierten EnOcean Funktechnik in den „EasySens“ Funksensoren, die sich mittels einer 2cm² großen Solarzelle selbst mit elektrischer Energie versorgen, können die Geräte ohne Batterien arbeiten. Durch den Wegfall austauschbarer Batterien sind die Geräte quasi wartungsfrei und umweltschonend.

Gegebenenfalls muss nach längerer Lagerung der Funksensoren in Dunkelheit, z.B. während der Inbetriebnahme, der solarbetriebene Energiespeicher nachgeladen werden. In der Regel geschieht dies automatisch während der ersten Betriebsstunden im Tageslicht. Sollte die Anfangsladung in den ersten Betriebsstunden nicht ausreichend sein, erreicht der Fühler jedoch spätestens nach 3 bis 4 Tagen seine volle Betriebsbereitschaft. Spätestens nach dieser Zeit sendet der Fühler auch problemlos im Dunkelbetrieb (nachts).

Bei der Auswahl des Montageortes sollten folgende Punkte beachtet werden:

- Die Mindestbeleuchtungsstärke von 200lx sollte für mindestens 3-4 Stunden täglich am Montageort vorhanden sein - unabhängig davon, ob es sich um Kunst- oder Tageslicht handelt. Zum Vergleich: Die Arbeitsstättenverordnung fordert für Büroarbeitsplätze eine Mindestbeleuchtungsstärke von 500lx.
- Die Beleuchtungsstärke sollte dauerhaft nicht über 1000lx liegen.
- Nicht über den Tagesverlauf ausreichend ausgeleuchtete Raumnischen sollten gemieden werden.
- Bei der Verwendung von gebündeltem Kunstlicht sollte der Einfallswinkel auf die Solarzelle nicht zu steil sein.
- Der Fühler ist mit der Solarzellenseite bevorzugt in Fensterrichtung zu montieren, dabei ist die direkte Sonneneinstrahlung zu vermeiden. Zeitweise direkte Sonneneinstrahlung würde zu verfälschten Messwerten bei der Temperaturerfassung führen.
- Der Montageort sollte auch im Hinblick auf die spätere Nutzung des Raumes so gewählt werden, dass eine Abschattung durch die Benutzer, z.B. durch Ablageflächen oder Rollcontainer, vermieden wird.

Selecting the mounting place for Solar Energy Storage

To meet special requirements concerning a correct and sufficient ambient brightness, you have to observe certain basic conditions, when selecting the mounting place.

By means of the energy-optimized EnOcean radio technology used in our "EasySens“ radio sensors, supplying themselves with electric energy by a 2 cm² solar cell, the devices can work without batteries. Thanks to the cessation of changeable batteries the sensors are almost maintenance-free and environmentally sound.

If necessary, the solar-powered energy storage must be reloaded after a longer storage of the radio sensors in darkness, e.g. during installation. In principle, however, this is made automatically during the first operating hours in daylight. If the initial loading should not be sufficient in the first operating hours, the sensor is reaching its full operating state after 3 to 4 days at the latest. The sensor is sending properly in darkness (in the night) after this period of time at the very latest.

When selecting the mounting place for the radio sensors, the following should be considered:

- The minimum illumination of 200lx should be guaranteed at the mounting place for at least3 to 4 hours everyday regardless whether there is artificial light or daylight.
- The health and safety at work act requires a minimum illumination of 500lx for office workplaces.
- The illumination should not exceed 1000lx in the long term.
- A recess that is not illuminated sufficiently in the course of a day should be avoided.
- When using collimated artificial light the angle of incidence on the solar cell should be not too steep.
- The sensors should preferably be mounted with the solar cell in window direction, whereas a direct sun radiation should be avoided. An occassionally direct sun radiation would lead to falsified measuring values with the temperature detection.
- With regard to a future use of the room, the mounting place should be selected in that way, that a later shadowing by the user, e.g. by filing places or rolling container, is avoided..

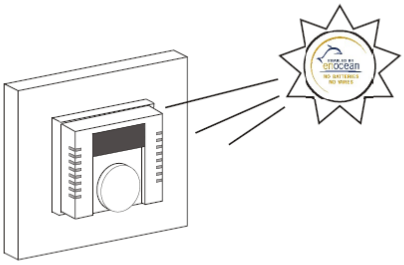

Montagehinweis

Die Montage des Sensors erfolgt durch Aufkleben der Sensorgrundplatte mittels der beiliegenden Klebestreifen auf der ebenen Wandfläche. Bei Bedarf kann die Platte auch mit Dübel und Schrauben befestigt werden.
Anschließend wird der jeweilige Schalterprogramm-Rahmen zusammen mit dem Zwischenrahmen (Zubehör) auf die Grundplatte aufgesteckt.
Abschließend wird der Sensor in die Rahmenmitte aufgesteckt.

Der Sensor wird in einem betriebsfertigen Zustand ausgeliefert. Gegebenenfalls muss nach längerer Lagerung der Funksensoren in Dunkelheit, der interne solarbetriebene Energiespeicher nachgeladen werden. In der Regel geschieht dies automatisch während der ersten Betriebsstunden im Tageslicht. Siehe hierzu Hinweise „Solar Energiespeicher".

Mounting Advice

Installation is made by gluing the sensor base plate to the smooth wall surface by means of the adhesive tape included. If required, the base plate can also be fixed by means of rawl plugs and screws.
Afterwards, the respective switch program frame is put on the base plate along with the intermediate frame (accessory). Finally, the sensor is put in the frame center.

The sensor is supplied in an operational status. Probably, the internal solar energy storage must be reloaded after a longer storage of the radio sensors in darkness. In principle, the reloading process is done automatically during the first operating hours in daylight. For this purpose, please refer to the remarks "solar energy storage".

1. Grundplatte befestigen

Mounting base plate

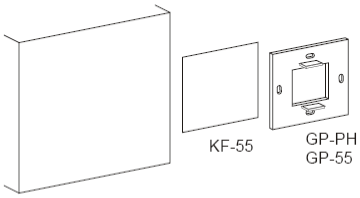

2. Rahmen befestigen

Mounting frame

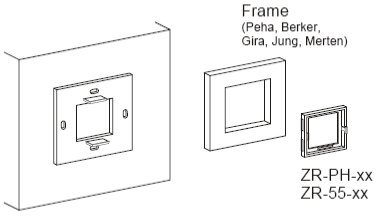

3. Sensor befestigen

Mounting sensor

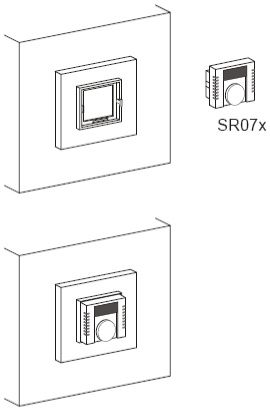

Zubehör

(ZR-PH-rws)	Zwischenrahmen für Peha Aura, Farbe reinweiß
(ZR-PH-an)	Zwischenrahmen für Peha Aura, Farbe anthrazit
(ZR-PH-alu)	Zwischenrahmen für Peha Aura, Farbe alu
(ZR-55-rws)	Zwischenrahmen für Berker, Gira, Jung, Merten, Farbe reinweiß
(ZR-55-an)	Zwischenrahmen für Berker, Gira, Jung, Merten, Farbe anthrazit
(ZR-55-alu)	Zwischenrahmen für Berker, Gira, Jung, Merten, Farbe alu
(GP-PH)	Grundplatte zur Befestigung des Fühlers Peha
(GP-55)	Grundplatte zur Befestigung des Fühlers Berker, Gira,...
(KF-55)	Klebefolie zur Befestigung des Fühlers
(CR1620)	Knopfzelle CR1620 3V, optional zur Verwendung als batteriebetriebener Fühler

Accessories

(ZR-PH-rws)	Intermediate frame for Peha Aura, colour pure white
(ZR-PH-an)	Intermediate frame for Peha Aura, colour anthracite
(ZR-PH-alu)	Intermediate frame for Peha Aura, colour alu
(ZR-55-rws)	Intermediate frame for Berker, Gira, Jung Merten, colour pure white
(ZR-55-an)	Intermediate frame for Berker, Gira, Jung Merten, colour anthracite
(ZR-55-alu)	Intermediate frame for Berker, Gira, Jung Merten, colour alu
(GP-PH)	Base plate for fixing of sensor Peha
(GP-55)	Base plate for fixing of sensor Berker, Gira,...
(KF-55)	Adhesive foil for fixing of sensor
(CR1620)	Coin cell CR1620 3V for optional use as a battery-powered sensor

Inbetriebnahme

Damit die Messwerte der Sensoren am Empfänger korrekt ausgewertet werden, ist es notwendig, die Geräte in den Empfänger einzulernen. Dies geschieht automatisch mittels der "Lerntaste" am Sensor oder manuell durch Eingabe der 32bit Sensor-ID und einer speziellen "Einlernprozedur" zwischen Sender und Empfänger. Details werden in der jeweiligen Softwaredokumentation des Empfängers beschrieben.

Installation

In order to assure a correct evaluation of the measuring values by the receiver, it is necessary to have the devices learned by the receiver. This is done automatically by means of a "learn button" at the sensor or manually by input of the 32bit sensor ID and a special "learning procedure" between sender and receiver. The respective details are described in the corresponding software documentation of the receiver.

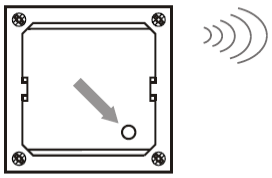

Einlern-Telegramm bei Tastendruck

Learning-in of a telegram with button actuation

Informationen zu Funk

Beschreibung EnOcean Telegramm

ORG	7 dez. Immer (EnOcean Gerätetyp "4BS")
Data_byte3	nicht verwendet
Data_byte2	Sollwert Min. - … Max. +, linear n=0...255
Data_byte1	Temperatur 0...+40°C, linear n=255...0
Data_byte0	Bit D3 Lerntaste (Wert 0 = Taster gedrückt) Bit D0 Schiebeschalter Nacht/ Tag ☾ / ☼ (Wert 0 = Stellung Nacht)
ID_Byte3	Geräte ID (Byte3)
ID_Byte2	Geräte ID (Byte2)
ID_Byte1	Geräte ID (Byte1)
ID_Byte0	Geräte ID (Byte0)

Reichweitenplanung

Da es sich bei den Funksignalen um elektromagnetische Wellen handelt, wird das Signal auf dem Weg vom Sender zum Empfänger gedämpft. D.h. sowohl die elektrische als auch die magnetische Feldstärke nimmt ab, und zwar umgekehrt proportional zum Quadrat des Abstandes von Sender und Empfänger (E,H~1/r²)

Neben dieser natürlichen Reichweiteneinschränkung kommen noch weitere Störfaktoren hinzu: Metallische Teile, z.B. Armierungen in Wänden, Metallfolien von Wärmedämmungen oder metallbedampftes Wärmeschutzglas reflektieren elektromagnetische Wellen. Daher bildet sich dahinter ein sogenannter Funkschatten.

Zwar können Funkwellen Wände durchdringen, doch steigt dabei die Dämpfung noch mehr als bei Ausbreitung im Freifeld.

Durchdringung von Funksignalen:

Material	*Durchdringung*
Holz, Gips, Glas unbeschichtet	90...100%
Backstein, Pressspanplatten	65...95%
Armierter Beton	10...90%
Metall, Aluminiumkaschierung	0...10%

Für die Praxis bedeutet dies, dass die verwendeten Baustoffe im Gebäude eine wichtige Rolle bei der Beurteilung der Funkreichweite spielen. Einige Richtwerte, damit man etwa das Umfeld bewerten kann:

Funkstreckenweite/-durchdringung:

Sichtverbindungen:
Typ. 30m Reichweite in Gängen, bis zu 100m in Hallen

Rigipswände/Holz:
Typ. 30m Reichweite durch max. 5 Wände

Ziegelwände/Gasbeton:
Typ. 20m Reichweite durch max. 3 Wände

Stahlbetonwände/-decken:
Typ. 10m Reichweite durch max. 1 Decke

Versorgungsblöcke und Aufzugsschächte sollten als Abschottung gesehen werden

Zudem spielt der Winkel eine Rolle, mit dem das gesendete Signal auf die Wand trifft. Je nach Winkel verändert sich die effektive Wandstärke und somit die Dämpfung des Signals. Nach Möglichkeit sollten die Signale senkrecht durch das Mauerwerk laufen. Mauernischen sind zu vermeiden
.

Information on Radio Sensors

Description EnOcean Telegram

ORG	7 dec. Always (EnOcean module type "4BS")
Data_byte3	not used
Data_byte2	Setpoint Min. - … Max. +, linear n=0...255
Data_byte1	Temperature 0...+40°C, linear n=255...0
Data_byte0	Bit D3 learn button (value 0 = button pressed) Bit D0 slide switchnight /day ☾ / ☼ (value 0 = position night)
ID_Byte3	device identifier (Byte3)
ID_Byte2	device identifier (Byte2)
ID_Byte1	device identifier (Byte1)
ID_Byte0	device identifier (Byte0)

Transmission Range

As the radio signals are electromagnetic waves, the signal is damped on its way from the sender to the receiver. That is to say, the electrical as well as the magnetic field strength is removed inversely proportional to the square of the distance between sender and receiver (E,H~1/r²).

Beside these natural transmission range limits, further interferences have to be considered: Metallic parts, e.g. reinforcements in walls, metallized foils of thermal insulations or metallized heat-absorbing glass, are reflecting electromagnetic waves. Thus, a so-called radio shadow is built up behind these parts.

It is true that radio waves can penetrate walls, but thereby the damping attenuation is even more increased than by a propagation in the free field.

Penetration of radio signals:

Material	*Penetration*
Wood, gypsum,glass uncoated	90...100%
Brick, pressboard	65...95%
Reinforced concrete	10...90%
Metall, alumium pasting	0...10%

For the praxis, this means, that the building material used in a building is of paramount importance for the evaluation of the transmitting range. For an evaluation of the environment, some guide values are listed:

Radio path range/-penetration:

Visual contacts:
Typ. 30m range in passages, corridors, up to 100m in halls

Rigypsum walls/wood:
Typ. 30m range through max. 5 walls

Brick wall/Gas concrete:
Typ. 20m range through max. 3 walls

Reinforced concrete/-ceilings:
Typ. 10m range through max. 1 ceiling

Supply blocks and lift shafts should be seen as a compartmentalisation

In addition, the angle with which the signal sent arrives at the wall is of great importance. Depending on the angle, the effective wall strength and thus the damping attenuation of the signal changes. If possible, the signals should run vertically through the walling. Walling recesses should be avoided.

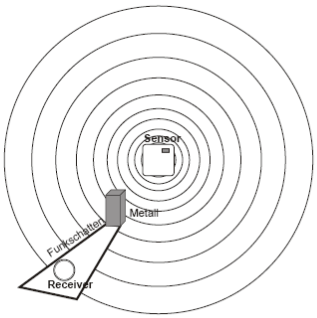

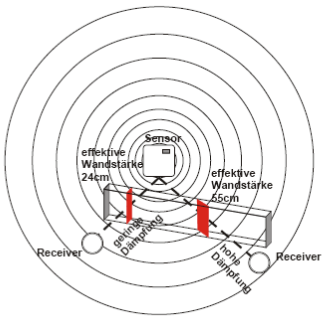

Andere Störquellen

Geräte, die ebenfalls mit hochfrequenten Signalen arbeiten, z.B. Computer, Audio-/Videoanlagen, elektronische Trafos und Vorschaltgeräte etc. gelten als weitere Störquellen. Der Mindestabstand zu diesen Geräten sollte 0,5m betragen.

Finden der optimalen Geräteplatzierung mit Feldstärke-Messgerät EPM100

Unter der Bezeichnung EPM100 steht ein mobiles Feldstärke-Messgerät zur Verfügung, welches dem Installateur zur einfachen Bestimmung der optimalen Montageorte für Sensor und Empfänger dient. Weiterhin kann es zur Überprüfung von gestörten Verbindungen bereits installierter Geräte benutzt werden.

Am Gerät werden die Feldstärke empfangener Funktelegramme und störende Funksignale im Bereich 868MHz angezeigt.

Vorgehensweise bei der Ermittlung der Montageorte für Funksensor/Empfänger:
Person 1 bedient den Funksensor und erzeugt durch Tastendruck Funktelegramme.
Person 2 überprüft durch die Anzeige am Messgerät die empfangene Feldstärke und ermittelt so den optimalen Montageort.

Hochfrequenzemmissionen von Funksensoren

Seit dem Aufkommen schnurloser Telefone und dem Einsatz von Funksystemen in Wohngebäuden werden auch die Einflußfaktoren der Funkwellen auf die Gesundheit der im Gebäude lebenden und arbeitenden Menschen stark diskutiert. Oft herrscht sowohl bei den Befürwortern als auch bei den Kritikern eine große Verunsicherung aufgrund fehlender Messergebnisse und Langzeitstudien.

Ein Messgutachten des Instituts für sozial-ökologische Forschung und Bildung (ECOLOG) hat nun bestätigt, daß die Hochfrequenzemissionen von Funkschaltern und Sensoren mit EnOcean Technologie deutlich niedriger liegen als vergleichbare konventionelle Schalter.

Dazu muß man wissen, daß auch konventionelle Schalter aufgrund des Kontaktfunkens elektromagnetische Felder aussenden. Die abgestrahlte Leistungsflußdichte (W/m²) liegt, über den Gesamtfrequenzbereich betrachtet, 100 mal höher als bei Funkschaltern. Zudem wird aufgrund der reduzierten Verkabelung bei Funkschaltern eine potentielle Exposition durch über die Leitung abgestrahlten niederfrequenten Magnetfelder vermindert. Vergleicht man die Funkemissionen der Funkschalter mit anderen Hochfrequenzquellen im Gebäude, wie z.B. DECT-Telefone und -Basistationen, so liegen diese Systeme um einen Faktor 1500 über denen der Funkschalter.

Other Interference Sources

Devices, that also operate with high-frequency signals, e.g. computer, auido-/video systems, electronical tansfomers and ballasts etc. are also considered as an interference source. The minimum distance to such devices should amount to 0,5m.

Find the optimum device location by means of the field strength-measuring instrument EPM100

Under the description EPM100 we understand a mobile field strength measuring instrument, which allows the plumber or electrician to easily dertermine the optimum mounting place for sensor and receiver. Moreover, it can be used for the examination of interfered connections of devices, already installed in the building.

At the device, the field strengths of radio telegrams received or interfered radio signals in the range 868MHz are displayed.

Proceeding upon determination of mounting place for radio sensor/ receiver:
Person 1 operates the radio sensor and produces a radio telegram by key actuation
By means of the displayed values on the measuring instrument, person 2 examines the field strength received and determines the optimum installation place, thus.

High-frenquency emission of radio sensors

Since the development of cordless telephones and the use of radio systems in residential buildings, the influence of radio waves on people's health living and working in the building have been discussed intensively. Due to missing measuring results and long-term studies, very often great feelings of uncertainly have been existing with the supporters as well as with the critics of radio systems.

A measuring experts certificate of the institute for social ecological research and education (ECOLOG) has now confirmed, that the high-fequency emissions of radio keys and sensors based on EnOcean technology are considerably lower than comparable conventional keys.

Thus, it is good to know, that conventional keys do also send electromagnetic fields, due to the contact spark.The emitted power flux density (W/m²) is 100 times higher than with radio sensors, considered over the total frequency range. In addition, a potential exposition by low-frequency magnet fields, emitted via the wires, are reduced due to wireless radio keys. If the radio emission is compared to other high-frequency sources in a building, such as DECT-telephones and basis stations, these systems are 1500 times higher-graded than radio keys.

SR04 rH

Funk-Raumfühler rel. Feuchte/Temperatur
Wireless Room sensor humidity/temperature

thermokon
Sensortechnik GmbH

DE - Datenblatt

Technische Änderungen vorbehalten
Stand 17.03.06

EN - Datasheet

Subject to technical alteration
Issue date 17.03.06

26000...

SR04x

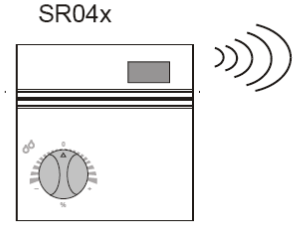

EasySens
Drahtlos - Batterielos
Wireless - Battery-less

Anwendung

Batterieloser Funk-Raumfühler zur Temperatur- und Lüftungsregelung in Verbindung mit den Empfängerschnittstellen SRC-x und übergeordnetem Reglersystem.

Übertragung mittels Funk-Telegrammen gemäß EnOcean-Standard an den Empfänger. Je nach Typ mit integriertem Sensor für rel. Feuchte und Temperatur, Drehknopf zur Sollwertverstellung, Präsenztaste. Mit internem solarbetriebenem Energiespeicher.

Application

Battery-less radio room sensor for temperature control in connection with the receiving interfaces SRC-x and higher-graded control systems.

Transmission to receiver by means of radio telegrams according to EnOcean standard. Integrated sensor humidity and temperature, rotary knob for setpoint adjustment, presence key. With integrated solar energy storage.

Typenübersicht

SR04 rH	Raumfühler rel. Feuchte/Temperatur
SR04P rH	Raumfühler mit Sollwertsteller
SR04PT rH	Raumfühler mit Sollwertsteller, Präsenztaste
SR04P MS rH	Raumfühler mit Sollwertsteller, Schiebeschalter 0/I

Types available

SR04 rH	Room sensor humidity/temperature
SR04P rH	Room sensor with setpoint adjustment
SR04PT rH	Room sensor with setp. adjustment, presence key
SR04P MS rH	Room sensor with setp. adjustment, slide switch 0/I

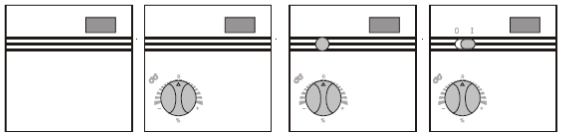

SR04 rH SR04P rH SR04PT rH SR04P MS rH

Thermokon Sensortechnik GmbH - www.thermokon.de - email@thermokon.de

Seite 2

Technische Daten

Technologie:	EnOcean, STM100	
Sendefrequenz:	868,3 MHz	
Reichweite:	ca. 30 Meter Gebäude, ca. 300m Freifeld	
Rel.Feuchte Sensor:	Bereich	0...100%rF
	Auflösung	0,4%rF
	Abs.Genauigkeit	
	1 Punkt Kalibrierung bei 50%: +/-3%,	
	Bereich (30%...70)%: +/-4%	
Temperatur Sensor:	Bereich	0°C...+40°C,
	Auflösung	0,15K
	Abs.Genauigkeit	typ. +/-0,4K
Sollwerterfassung:	Bereich	0...270° Drehwinkel
	Auflösung	1,1°
Schiebeschalter MS: (Taster optional)	Anzahl Schaltstufen	2 (z.B. 0/I)
Messwerterfassung:	alle 100 Sekunden	
Sendeintervall:	...alle 100 Sekunden bei Änderungen >0,8K, oder >3°Drehwinkel, oder Schiebeschalter	
	...alle 1000 Sekunden bei Änderungen <0,8K, oder <3°Drehwinkel	
Energiegenerator:	Solarzelle, interner goldcap, wartungsfrei	
Gehäuse:	ABS (ASA), Farbe weiß ähnlich RAL9010	
Schutzart	IP20 gemäß EN60529	
Umgebungstemperatur:	-25...65°C	
Transport:	-25...65°C / max. 70%rF, nicht kond..	
Gewicht:	50g	

Page 2

Technical Data

Technology:	EnOcean, STM100	
Transmitting frequency:	868,3 MHz	
Transmitting range:	approx. 30m in buildings, approx. 300m upon free propagation	
Humidity sensor:	Range:	0…100%rH
	Resolution:	0,4%rH
	Absolute accuracy:	
	1 Point Calibration 50%: +/-3%,	
	Range (30%...70)%: +/-4%;	
Temperature sensor:	Range:	0°C…+40°C
	Resolution:	0,15 K
	Absolute accuracy:	typ. +/-0,4k
Set point adjustment:	Range:	0…270° angle of rotation
	Resolution:	1,1°
Slide switch: (option key)	Number of switching steps 2 (O/I)	
Measuring value detection:	every 100 seconds	
Sending interval:	…every 100 seconds ifi changes >0,8K, or >3° angle of rotation, or switch step	
	…every 1000 seconds if changes <0,8K, or <3° angle of rotation,	
Energy generator:	Solar cell, internal goldcap, maintenance-free	
Housing:	ABS (ASA), colour pure white similar to RAL9010	
Protection:	IP20 according to EN60529	
Ambient temperature:	-25…+65°C	
Transport:	-25…+65°C/ max. 70%rH, non-condensed	
Weight :	50g	

Abmessungen (mm)

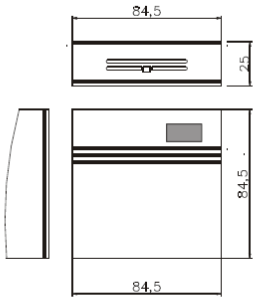

Dimensions (mm)

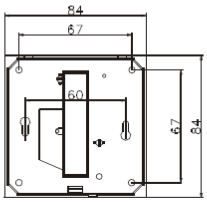

Normen und Standards

CE-Konformität: 89/336/EWG Elektromagnetische Verträglichkeit
R&TTE 1999/5/EC Radio and Telecommunications Terminal Equipment Directive

Standards: ETSI EN 301 489-1: 2001-09
ETSI EN 301 489-3: 2001-11
ETSI EN 61000-6-2: 2002-08
ETSI EN 300 220-3: 2000-09

Die allgemeine Zulassung für den Funkbetrieb gilt für alle EU-Länder und für die Schweiz.

FCC ID: S3N-SRXX
Dieses Gerät ist in Übereinstimmung mit Part 15/FCC Rules.

Der Betrieb unterliegt den folgenden Bestimmungen:
(1) das Gerät darf keine schwerwiegenden Störungen verursachen und
(2) das Gerät muss sicher gegen Störungen sein, speziell gegen Störungen, die ein Fehlverhalten des Gerätes verursachen.

Achtung: Änderungen oder Modifikationen des Gerätes, welche nicht ausdrücklich von Thermokon genehmigt sind, führen zur Aufhebung der FCC Betriebs-Zulassung

Auswahl des Montageorts für Solar Energiespeicher

Bei der Auswahl des Montageortes in Bezug auf korrekte und ausreichende Umgebungshelligkeit sind folgende Vorgaben einzuhalten.

Durch die Verwendung der energieoptimierten EnOcean Funktechnik in den „EasySens" Funksensoren, die sich mittels einer 2cm² großen Solarzelle selbst mit elektrischer Energie versorgen, können die Geräte ohne Batterien arbeiten. Durch den Wegfall austauschbarer Batterien sind die Geräte quasi wartungsfrei und umweltschonend.

Gegebenenfalls muss nach längerer Lagerung der Funksensoren in Dunkelheit, z.B. während der Inbetriebnahme, der solarbetriebene Energiespeicher nachgeladen werden. In der Regel geschieht dies automatisch während der ersten Betriebsstunden im Tageslicht. Sollte die Anfangsladung in den ersten Betriebsstunden nicht ausreichend sein, erreicht der Fühler jedoch spätestens nach 3 bis 4 Tagen seine volle Betriebsbereitschaft. Spätestens nach dieser Zeit sendet der Fühler auch problemlos im Dunkelbetrieb (nachts).

Bei der Auswahl des Montageortes sollten folgende Punkte beachtet werden:

- Die Mindestbeleuchtungsstärke von 200lx sollte für mindestens 3-4 Stunden täglich am Montageort vorhanden sein - unabhängig davon, ob es sich um Kunst- oder Tageslicht handelt. Zum Vergleich: Die Arbeitsstättenverordnung fordert für Büroarbeitsplätze eine Mindestbeleuchtungsstärke von 500lx.
- Die Beleuchtungsstärke sollte dauerhaft nicht über 1000lx liegen.
- Nicht über den Tagesverlauf ausreichend ausgeleuchtete Raumnischen sollten gemieden werden.
- Bei der Verwendung von gebündeltem Kunstlicht sollte der Einfallswinkel auf die Solarzelle nicht zu steil sein.
- Der Fühler ist mit der Solarzellenseite bevorzugt in Fensterrichtung zu montieren, dabei ist die direkte Sonneneinstrahlung zu vermeiden. Zeitweise direkte Sonneneinstrahlung würde zu verfälschten Messwerten bei der Temperaturerfassung führen.
- Der Montageort sollte auch im Hinblick auf die spätere Nutzung des Raumes so gewählt werden, dass eine Abschattung durch die Benutzer, z.B. durch Ablageflächen oder Rollcontainer, vermieden wird.

Norms and Standards

CE-Conformity: 89/336/EWG Electromagnetic compatibility
R&TTE 1999/5/EC Radio and Telecommunications Terminal Equipment Directive

Standards: ETSI EN 301 489-1: 2001-09
ETSI EN 301 489-3: 2001-11
ETSI EN 61000-6-2: 2002-08
ETSI EN 300 220-3: 2000-09

The general registration for the radio operation is valid for all EU-countries as well as for Switzerland.

FCC ID: S3N-SRXX
This device complies with Part 15 of the FCC Rules.

Operation is subject to the following two conditions:
(1) this device may not cause harmful interference, and
(2) this device must accept any interference received, including interference that may cause undesired operation.

Warning: Changes or modifications made to this equipment not expressly approved by Thermokon may void the FCC authorization to operate this equipment.

Selecting the mounting place for Solar Energy Storage

To meet special requirements concerning a correct and sufficient ambient brightness, you have to observe certain basic conditions, when selecting the mounting place.

By means of the energy-optimized EnOcean radio technology used in our "EasySens" radio sensors, supplying themselves with electric energy by a 2 cm² solar cell, the devices can work without batteries. Thanks to the cessation of changeable batteries the sensors are almost maintenance-free and environmentally sound.

If necessary, the solar-powered energy storage must be reloaded after a longer storage of the radio sensors in darkness, e.g. during installation. In principle, however, this is made automatically during the first operating hours in daylight. If the initial loading should not be sufficient in the first operating hours, the sensor is reaching its full operating state after 3 to 4 days at the latest. The sensor is sending properly in darkness (in the night) after this period of time at the very latest.

When selecting the mounting place for the radio sensors, the following should be considered:

- The minimum illumination of 200lx should be guaranteed at the mounting place for at least 3 to 4 hours everyday regardless whether there is artificial light or daylight.
- The health and safety at work act requires a minimum illumination of 500lx for office workplaces.
- The illumination should not exceed 1000lx in the long term.
- A recess that is not illuminated sufficiently in the course of a day should be avoided.
- When using collimated artificial light the angle of incidence on the solar cell should be not too steep.
- The sensors should preferably be mounted with the solar cell in window direction, whereas a direct sun radiation should be avoided. An occassionally direct sun radiation would lead to falsified measuring values with the temperature detection.
- With regard to a future use of the room, the mounting place should be selected in that way, that a later shadowing by the user, e.g. by filing places or rolling container, is avoided..

Montagehinweis

Die Montage des Sensors erfolgt durch Aufkleben der Sensorgrundplatte mittels der beiliegenden Klebestreifen auf der ebenen Wandfläche. Bei Bedarf kann die Platte auch mit Dübel und Schrauben befestigt werden. Anschließend wird der Deckel auf die Grundplatte aufgesteckt.

Der Sensor wird in einem betriebsfertigen Zustand ausgeliefert. Gegebenenfalls muss nach längerer Lagerung der Funksensoren in Dunkelheit, der interne solarbetriebene Energiespeicher nachgeladen werden. In der Regel geschieht dies automatisch während der ersten Betriebsstunden im Tageslicht. Siehe hierzu Hinweise „Solar Energiespeicher".

Mounting Advice

Installation is made by gluing the sensor base plate to the smooth wall surface by means of the adhesive tape included. If required, the base plate can also be fixed by means of rawl plugs and screws.
Finally, the sensor is put on the sensor base plate.

The sensor is supplied in an operational status. Probably, the internal solar energy storage must be reloaded after a longer storage of the radio sensors in darkness. In principle, the reloading process is done automatically during the first operating hours in daylight. For this purpose, please refer to the remarks "solar energy storage".

1. Grundplatte befestigen

Mounting base plate

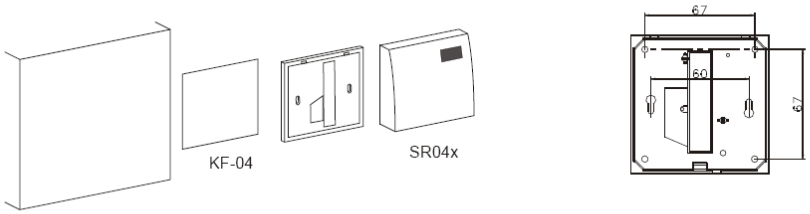

2. Sensor befestigen

Mounting sensor

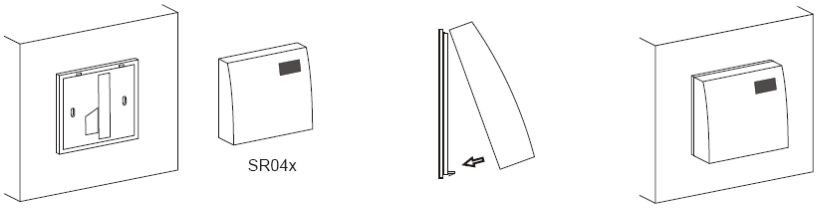

Zubehör

(KF-04)	Klebefolie zur Befestigung des Fühlers
(CR1620)	Knopfzelle CR1620 3V, optional zur Verwendung als batteriebetriebener Fühler

Accessories

(KF-04)	Adhesive foil for fixing of sensor
(CR1620)	Coin cell CR1620 3V for optional use as a battery-powered sensor

Inbetriebnahme

Damit die Messwerte der Sensoren am Empfänger korrekt ausgewertet werden, ist es notwendig, die Geräte in den Empfänger einzulernen. Dies geschieht automatisch mittels der "Lerntaste" am Sensor oder manuell durch Eingabe der 32bit Sensor-ID und einer speziellen "Einlernprozedur" zwischen Sender und Empfänger. Details werden in der jeweiligen Softwaredokumentation des Empfängers beschrieben.

Installation

In order to assure a correct evaluation of the measuring values by the receiver, it is necessary to have the devices learned by the receiver. This is done automatically by means of a "learn button" at the sensor or manually by input of the 32bit sensor ID and a special "learning procedure" between sender and receiver. The respective details are described in the corresponding software documentation of the receiver.

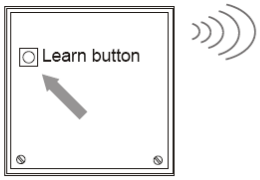

Einlern-Telegramm bei Tastendruck

Learning-in of a telegram with button actuation

Informationen zu Funk

ORG	7 dez. immer (EnOcean Gerätetyp "4BS")	
Data_byte3	Sollwert Min. - … Max. +, linear n=0...255	
Data_byte2	Rel. Feuchte 0...100%, linear n=0...250	
Data_byte1	Temperatur 0...40°C, linear n=0...250	
Data_byte0	Bit D3 Bit D0	Lerntaste (0=Taster gedrückt) Präsenztaste (0= Taster gedrückt) oder Schiebeschalter 0/I (1= Stellung 0)
ID_Byte3	Geräte ID (Byte3)	
ID_Byte2	Geräte ID (Byte2)	
ID_Byte1	Geräte ID (Byte1)	
ID_Byte0	Geräte ID (Byte0)	

Reichweitenplanung

Da es sich bei den Funksignalen um elektromagnetische Wellen handelt, wird das Signal auf dem Weg vom Sender zum Empfänger gedämpft. D.h. sowohl die elektrische als auch die magnetische Feldstärke nimmt ab, und zwar umgekehrt proportional zum Quadrat des Abstandes von Sender und Empfänger (E,H~1/r²)

Neben dieser natürlichen Reichweiteneinschränkung kommen noch weitere Störfaktoren hinzu: Metallische Teile, z.B. Armierungen in Wänden, Metallfolien von Wärmedämmungen oder metallbedampftes Wärmeschutzglas reflektieren elektromagnetische Wellen. Daher bildet sich dahinter ein sogenannter Funkschatten.

Zwar können Funkwellen Wände durchdringen, doch steigt dabei die Dämpfung noch mehr als bei Ausbreitung im Freifeld.

Durchdringung von Funksignalen:

Material	*Durchdringung*
Holz, Gips, Glas unbeschichtet	90...100%
Backstein, Pressspanplatten	65...95%
Armierter Beton	10...90%
Metall, Aluminiumkaschierung	0...10%

Für die Praxis bedeutet dies, dass die verwendeten Baustoffe im Gebäude eine wichtige Rolle bei der Beurteilung der Funkreichweite spielen. Einige Richtwerte, damit man etwa das Umfeld bewerten kann:

Funkstreckenweite/-durchdringung:

Sichtverbindungen:
Typ. 30m Reichweite in Gängen, bis zu 100m in Hallen

Rigipswände/Holz:
Typ. 30m Reichweite durch max. 5 Wände

Ziegelwände/Gasbeton:
Typ. 20m Reichweite durch max. 3 Wände

Stahlbetonwände/-decken:
Typ. 10m Reichweite durch max. 1 Decke

Versorgungsblöcke und Aufzugsschächte sollten als Abschottung gesehen werden

Zudem spielt der Winkel eine Rolle, mit dem das gesendete Signal auf die Wand trifft. Je nach Winkel verändert sich die effektive Wandstärke und somit die Dämpfung des Signals. Nach Möglichkeit sollten die Signale senkrecht durch das Mauerwerk laufen. Mauernischen sind zu vermeiden.

Information on Radio Sensors

ORG	7 dec. always (EnOcean device type "4BS")	
Data_byte3	Setpoint Min. - … Max. +, linear n=0...255	
Data_byte2	Humidity 0...100%, linear n=0...250	
Data_byte1	Temperature 0...40°C, linear n=0...250	
Data_byte0	Bit D3 Bit D0	Learn Button (0=Button pressed) Occup. Button (0= Button pressed) or Slide switch (1= Position 0)
ID_Byte3	device identifier (Byte3)	
ID_Byte2	device identifier (Byte2)	
ID_Byte1	device identifier (Byte1)	
ID_Byte0	device identifier (Byte0)	

Transmission Range

As the radio signals are electromagnetic waves, the signal is damped on its way from the sender to the receiver. That is to say, the electrical as well as the magnetic field strength is removed inversely proportional to the square of the distance between sender and receiver (E,H~1/r²).

Beside these natural transmission range limits, further interferences have to be considered: Metallic parts, e.g. reinforcements in walls, metallized foils of thermal insulations or metallized heat-absorbing glass, are reflecting electromagnetic waves. Thus, a so-called radio shadow is built up behind these parts.

It is true that radio waves can penetrate walls, but thereby the damping attenuation is even more increased than by a propagation in the free field.

Penetration of radio signals:

Material	*Penetration*
Wood, gypsum,glass uncoated	90...100%
Brick, pressboard	65...95%
Reinforced concrete	10...90%
Metall, alumium pasting	0...10%

For the praxis, this means, that the building material used in a building is of paramount importance for the evaluation of the transmitting range. For an evaluation of the environment, some guide values are listed:

Radio path range/-penetration:

Visual contacts:
Typ. 30m range in passages, corridors, up to 100m in halls

Rigypsum walls/wood:
Typ. 30m range through max. 5 walls

Brick wall/Gas concrete:
Typ. 20m range through max. 3 walls

Reinforced concrete/-ceilings:
Typ. 10m range through max. 1 ceiling

Supply blocks and lift shafts should be seen as a compartmentalisation

In addition, the angle with which the signal sent arrives at the wall is of great importance. Depending on the angle, the effective wall strength and thus the damping attenuation of the signal changes. If possible, the signals should run vertically through the walling. Walling recesses should be avoided.

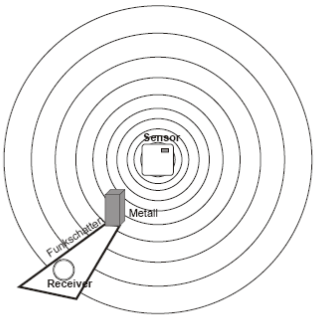

Andere Störquellen

Geräte, die ebenfalls mit hochfrequenten Signalen arbeiten, z.B. Computer, Audio-/Videoanlagen, elektronische Trafos und Vorschaltgeräte etc. gelten als weitere Störquellen. Der Mindestabstand zu diesen Geräten sollte 0,5m betragen.

Finden der optimalen Geräteplatzierung mit Feldstärke-Messgerät EPM100

Unter der Bezeichnung EPM100 steht ein mobiles Feldstärke-Messgerät zur Verfügung, welches dem Installateur zur einfachen Bestimmung der optimalen Montageorte für Sensor und Empfänger dient. Weiterhin kann es zur Überprüfung von gestörten Verbindungen bereits installierter Geräte benutzt werden.

Am Gerät werden die Feldstärke empfangener Funktelegramme und störende Funksignale im Bereich 868MHz angezeigt.

Vorgehensweise bei der Ermittlung der Montageorte für Funksensor/Empfänger:
Person 1 bedient den Funksensor und erzeugt durch Tastendruck Funktelegramme.
Person 2 überprüft durch die Anzeige am Messgerät die empfangene Feldstärke und ermittelt so den optimalen Montageort.

Hochfrequenzemmissionen von Funksensoren

Seit dem Aufkommen schnurloser Telefone und dem Einsatz von Funksystemen in Wohngebäuden werden auch die Einflußfaktoren der Funkwellen auf die Gesundheit der im Gebäude lebenden und arbeitenden Menschen stark diskutiert. Oft herrscht sowohl bei den Befürwortern als auch bei den Kritikern eine große Verunsicherung aufgrund fehlender Messergebnisse und Langzeitstudien.

Ein Messgutachten des Instituts für sozial-ökologische Forschung und Bildung (ECOLOG) hat nun bestätigt, daß die Hochfrequenzemissionen von Funkschaltern und Sensoren mit EnOcean Technologie deutlich niedriger liegen als vergleichbare konventionelle Schalter.

Dazu muß man wissen, daß auch konventionelle Schalter aufgrund des Kontaktfunkens elektromagnetische Felder aussenden. Die abgestrahlte Leistungsflußdichte (W/m²) liegt, über den Gesamtfrequenzbereich betrachtet, 100 mal höher als bei Funkschaltern. Zudem wird aufgrund der reduzierten Verkabelung bei Funkschaltern eine potentielle Exposition durch über die Leitung abgestrahlten niederfrequenten Magnetfelder vermindert. Vergleicht man die Funkemissionen der Funkschalter mit anderen Hochfrequenzquellen im Gebäude, wie z.B. DECT-Telefone und -Basistationen, so liegen diese Systeme um einen Faktor 1500 über denen der Funkschalter.

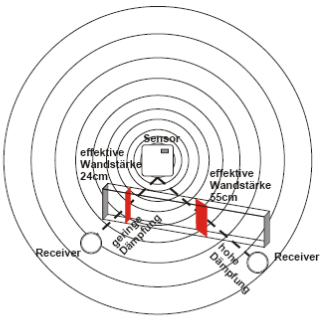

Other Interference Sources

Devices, that also operate with high-frequency signals, e.g. computer, auido-/video systems, electronical tansfomers and ballasts etc. are also considered as an interference source. The minimum distance to such devices should amount to 0,5m.

Find the optimum device location by means of the field strength-measuring instrument EPM100

Under the description EPM100 we understand a mobile field strength measuring instrument, which allows the plumber or electrician to easily dertermine the optimum mounting place for sensor and receiver. Moreover, it can be used for the examination of interfered connections of devices, already installed in the building.

At the device, the field strengths of radio telegrams received or interfered radio signals in the range 868MHz are displayed.

Proceeding upon determination of mounting place for radio sensor/ receiver:
Person 1 operates the radio sensor and produces a radio telegram by key actuation
By means of the displayed values on the measuring instrument, person 2 examines the field strength received and determines the optimum installation place, thus.

High-frenquency emission of radio sensors

Since the development of cordless telephones and the use of radio systems in residential buildings, the influence of radio waves on people's health living and working in the building have been discussed intensively. Due to missing measuring results and long-term studies, very often great feelings of uncertainly have been existing with the supporters as well as with the critics of radio systems.

A measuring experts certificate of the institute for social ecological research and education (ECOLOG) has now confirmed, that the high-fequency emissions of radio keys and sensors based on EnOcean technology are considerably lower than comparable conventional keys.

Thus, it is good to know, that conventional keys do also send electromagnetic fields, due to the contact spark.The emitted power flux density (W/m²) is 100 times higher than with radio sensors, considered over the total frequency range. In addition, a potential exposition by low-frequency magnet fields, emitted via the wires, are reduced due to wireless radio keys. If the radio emission is compared to other high-frequency sources in a building, such as DECT-telephones and basis stations, these systems are 1500 times higher-graded than radio keys.

23 09 93 Sequence of Operations for HVAC Controls

Echoflex Control boxes for sensible and latent conditioning were programmed according to the flow charts on the following pages.

Algorithm for Echoflex ERFCM-2 Sensible Conditioning Controller

Contact #1: Closed = heating mode,
Open = cooling mode
Contact #2: Closed = compressor on,
Open = compressor off

T_{hist} = 1.5 °F
T_{set} = Temperature setpoint from thermostat

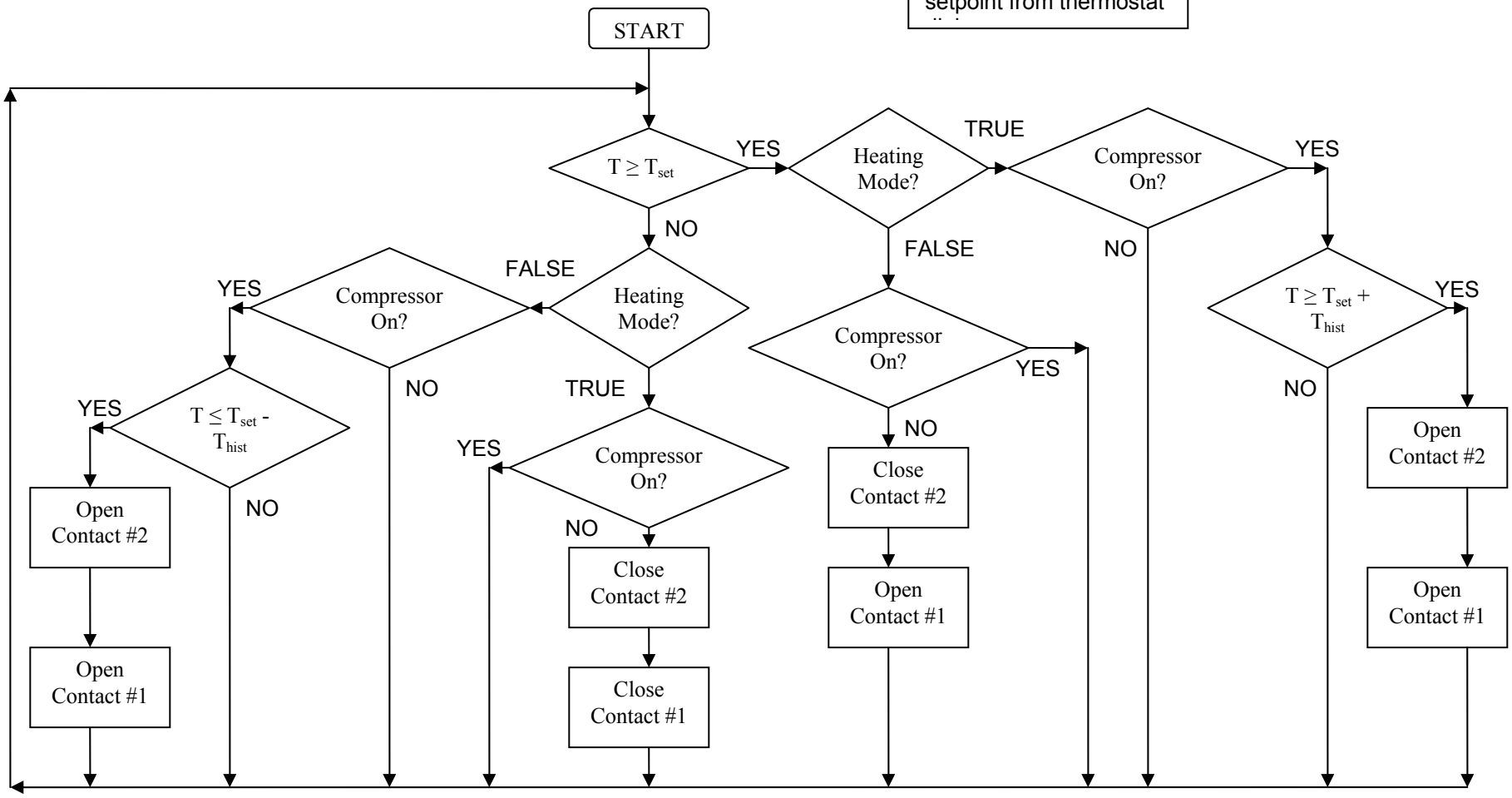

Algorithm for Echoflex ERFCM-2 Latent Conditioning Controller

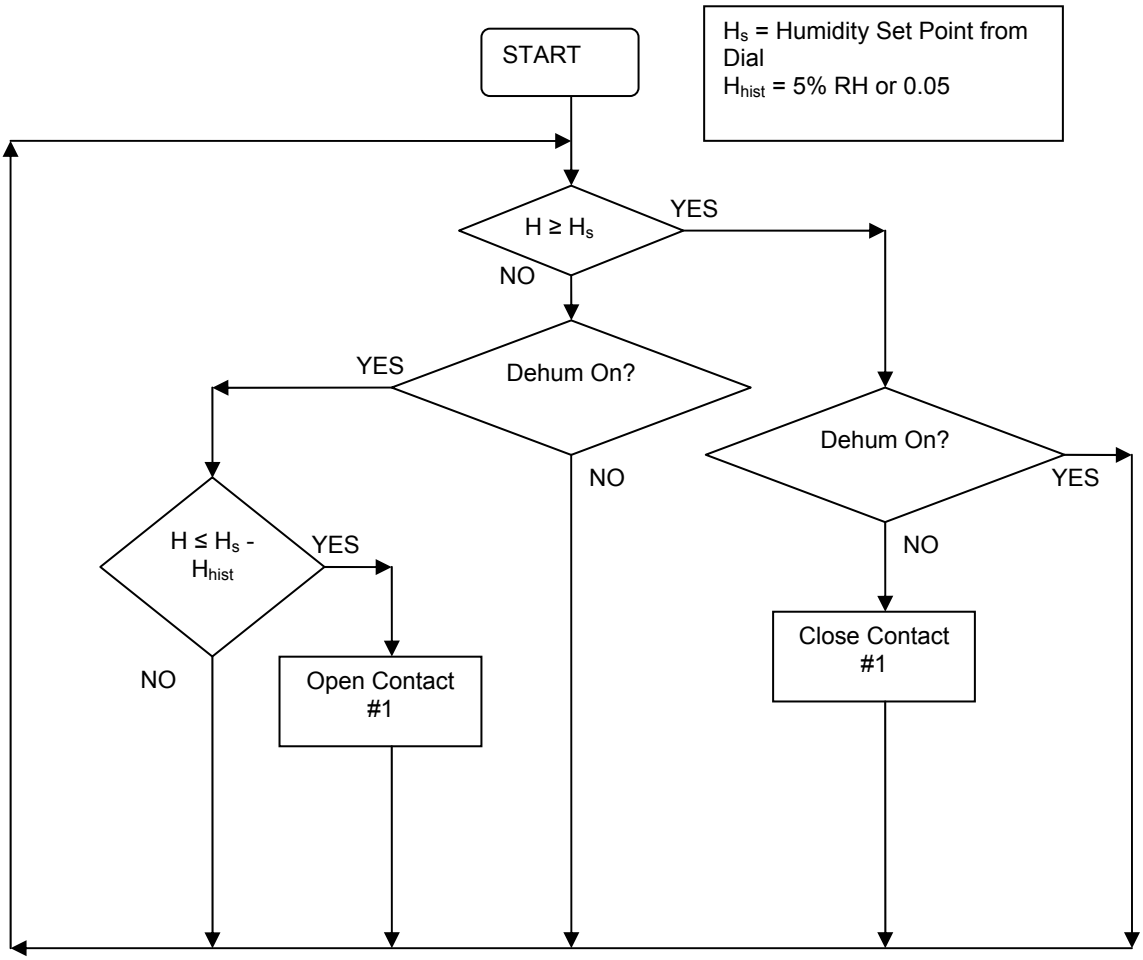

25 00 00 INTEGRATED AUTOMATION

25 01 00 OPERATION AND MAINTENANCE OF INTEGRATED AUTOMATION

25 01 20 Operation and Maintenance of Integrated Equipment

A La Crosse Professional Weather Station will be used to collect data about the weather directly outside of the house. The information obtained will be used to advise the resident about when to perform or not to perform high powered tasks such as running the dishwasher, running the washer and dryer, etc. A Weathergoose™ and three sensors to inform the resident of conditions within in the house in order to adjust their conditions appropriately will also be used. These conditions include temperature, humidity, and airflow. More details about these devices are given below.

<u>La Crosse Professional Weather Station</u>

The weather station has 4 components (temperature/humidity sensor, rain gauge, and anemometer) that will be placed outside the house. They run off 2 AA batteries, which will last for approximately 12 months. There will be a base station inside the house that connects wirelessly to the sensors. The base requires 3 AA batteries or can be powered by a AC/DC power adapter. The sensors will be able to measure outdoor temperature, humidity, and rainfall hourly, daily, and for extended periods of time. The information will be retrieved from the sensors to the base stations and will then be sent to the computer for data retrieval and analysis.

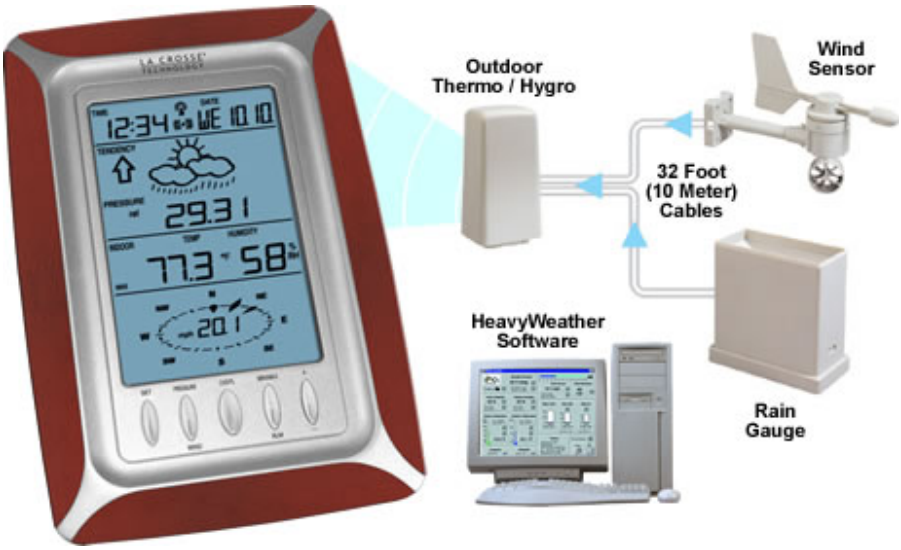

The documents on the following pages are taken from the La Crosse Professional Weather Station Product Manual.

7. LCD Overview

The following illustration shows the full segments of the LCD for description purposes only and will not appear like this during normal operation and use.

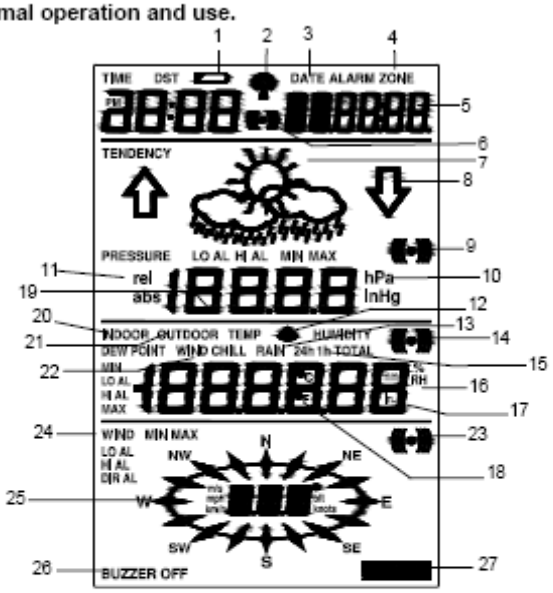

1. Low battery indicator
2. WWVB radio controlled time icon
3. Date display
4. Time zone display
5. Date, seconds, alarm time and time zone
6. Alarm icon
7. Weather forecast icons
8. Weather tendency indicator
9. Pressure alarm display
10. hPa/inHg air pressure unit
11. Pressure units (relative or absolute)
12. 433MHz reception icon
13. Rainfall display
14. Indoor, outdoor, humidity, dew point, wind chill, rainfall alarm icon
15. 24h, 1h or total hour display
16. Humidity display as RH%
17. Rainfall units (inch or mm)
18. Temperature display units (°C or °F)
19. Outdoor temperature/humidity display
20. Indoor temperature/humidity display
21. Dew point temperature display
22. Wind chill temperature display
23. Wind alarm icon
24. Wind information for Min/Max speed and wind speed low, high, direction alarm
25. Wind direction and speed (m/s, knots, Beaufort, km/h or mph) display
26. Alarm buzzer ON/OFF icon
27. General alarm icon

12. Operation keys

The base station has 8 keys for easy operation. Please refer to the following table for use and function of each key: Further descriptions of the key functions with regard to their immediate range of application can be found in the Programming modes:

SET - key	- In normal mode to enter the manual basic programming mode
	- In basic programming mode to select the following setting modes:
	  - LCD contrast setting
	  - Manual time setting (hours/minutes)
	  - 12/24 time format display
	  - Calendar setting (year/month/date)
	  - Time zone setting
	  - °C/°F temperature setting
	  - Wind speed unit setting
	  - Rainfall unit setting
	  - Pressure unit setting
	  - Relative air pressure setting
	  - Weather picture threshold setting
	  - Storm warning setting
	  - Audible storm alarm setting
	- In setting modes confirmation of the selected values
	- In alarm modes alarm ON/OFF
	- In alarm mode to enter programming of alarm values (long pressing)
	- To exit MIN/MAX modes

PRESSURE - key	- Toggle between Absolute and Relative air pressure displays
DISPLAY - key	- Toggle between the following current/ maximum/ minimum display modes: - Indoor temperature and humidity - Outdoor temperature and humidity - Outdoor wind chill - Outdoor dew point - Rainfall (24h, 1h, total)
WIND - key	To toggle between the following settings: - Wind speed - Wind direction - Wind direction display in degrees

ALARM - key	- In normal mode to enter the alarm programming mode
	- In alarm programming mode to select the following setting modes:
	  - Time alarm setting
	  - Indoor temperature alarm (high & low)
	  - Outdoor temperature alarm (high & low)
	  - Indoor humidity alarm (high & low)
	  - Outdoor humidity alarm (high & low)
	  - Outdoor wind chill alarm (high & low)
	  - Outdoor dew point alarm (high & low)
	  - Rainfall alarm (24h, 1h)
	  - Pressure alarm (high & low)
	  - Wind speed alarm (high & low)
	  - Wind direction alarm
	- In setting modes confirmation of the selected values
	- To exit MIN/MAX modes
	- To reset general alarm symbol

MIN/MAX - key	- In normal display mode to toggle between display of MIN/MAX values - To toggle between MIN/MAX values in MIN/MAX mode - To exit any programming mode
PLUS (+) – key	- In normal display mode to toggle between format of date display, seconds, time alarm and time zone - To increase the values in the setting modes - To exit MIN/MAX modes - In normal display mode to re-enter data learning mode (long pressing for 2 seconds)
MINUS (-) – key	- In normal display mode to enable/disable the buzzer alarm (long pressing) - To decrease the values in the setting modes - In basic programming mode audible storm alarm ON/OFF - To snooze the alarms off 24 hours when the alarm is sounding - In MIN/MAX modes to reset recorded values and recorded dates and times

***Press any key to activate the E.L. backlight**

21. Cleaning and Maintenance

- Clean the housing and screen of the base station only with a soft damp cloth. Do not use abrasives or solvents.
- Ensure that the rain sensor does not collect leaves or other dirt by checking the funnel for blockages every now and then. Also clean the seesaw of the sensor with a damp cloth and check by lightly tapping with your finger that it can move freely from side to side.
- Do not clean the funnel with the bottom half of the rain sensor attached nor the bottom part itself under running water. This may bear the danger of water entering the unit's inner parts and cause damages.
- Do not immerse the base station in water.
- Should there be damage to this product, please do not attempt to make any repairs. Please take this unit to a qualified technician. Opening or improper handling of the units will invalidate any guarantee.

WeatherGoose™

The WeatherGoose will be used to monitor the indoor conditions of the house. The house will have one WeatherGoose that will be connected to the computer to display data of the indoor conditions; these conditions include humidity, temperature, and airflow. Connected to the WeatherGoose base station will be three sensors that will collect data from the different modules of the house that will be transmitted through the WeatherGoose and then on to the computer. The WeatherGoose will need to be plugged into the wall outlet to obtain power. The sensors do not need a power source; they will draw it from the WeatherGoose to which they will be connected. Information on installation and usage of the WeatherGoose are given on the next page. For more information please refer to: http://www.itwatchdogs.com/DataSheets/WxGoos1(8.5x11)033006.pdf .

Alarming functions via SMTP e-mail and paging are available and thresholds easily set. Multiple addresses and alarm threshold levels can be set.

Stand-alone or Console Monitored

The built-in Ethernet port makes the WxGoos effective both in single cabinet monitoring or in multiple cabinet installations for three reasons:

First, the user needs only an Internet connection to access the data from anywhere.

Second, The unit can be part of a local sub-net operating beind a firewall which utilizes existing security infrastructure. VPN's or private networks can be used.

Third, the availability of SNMP based data allows dozens of Network Monitoring programs such as HP OpenView, IP Sentry, MRTG, or What's Up Gold (Ipswitch) to easily add the WxGoos to the list of monitored devices.

The SNMP MIB supplied automatically expands as remote devices are added making integration straightforward.

Remote Sensors

The remote sensor serial bus was designed to make the cost of adding remote sensors or other remote devices minimal.

The Dallas Semiconductor 1-Wire protocol uses telephone wire or Cat3 cable. RJ-ll connectors are used. Lengths of up to 1,000' can be achieved in straight runs. Star topology reduces the aggregate length of the serial cable by runs of hundreds of feet are common. All remote sensor devices are parasically powered and no remote device power supplies are required. Remote devices can be added or deleted without reconfiguration.

Simple Installation

The narrow flanged sheet metal housing gives the installer the most flexibility in attaching the unit. In existing cabinets the unit can be simply tie-wrapped or secured with self-tapping screws to the cabinet's top grill or internal rail.

In new installations, a bracket secures the device to an vacant location. Upon start-up, the installer uses an automatic discovery program that assigns the desired IP address. If a subnet is operational, the WxGoos' internal DHCP software will automatically lease an address from the server.

Using Remote Sensors

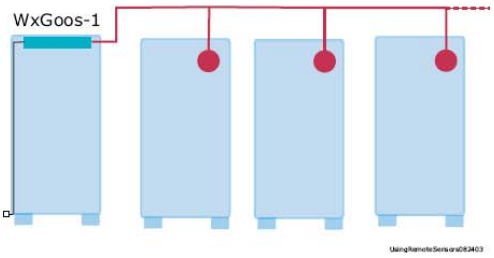

In this drawing, one WxGoos-1 monitors the temperature and airflow in three adjacent cabinets. Each sensor plugs directly into the unit. The sensors do not require power. Dozens of remote sensors can be added hundreds of feet away.

Specifications:

Internal Sensors
Temperature: -67F to 175F, +/-0.5°C
Humidity: 0 -100% +/- 5%,
Air Flow: 0 - 150cfm, +/- 25%
Sound Level: 0 - 200dbm, +/- 10%
Light Level: 0 - 100 Lux, +/- 5%
I/O Ports: Three, 0 - 5 vdc analog sense (or output) with controllable loop current
Remote Serial Bus: 1-Wire protocol, self-powered. Typical distances of 600' aggregate length.
Remote Sensors.

Using External Sensors

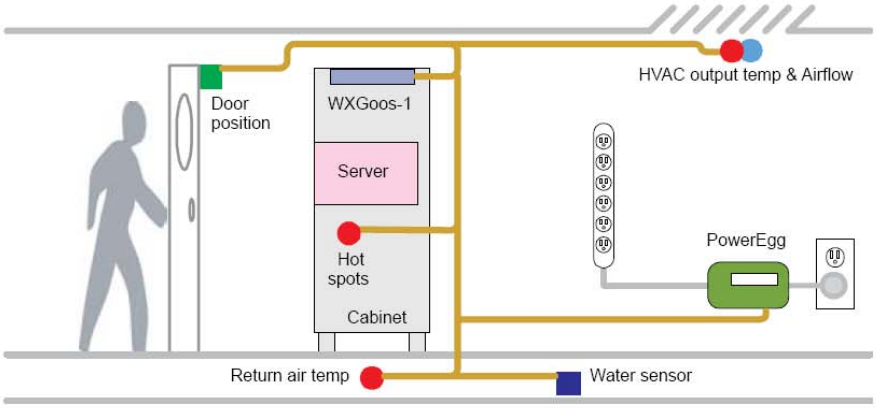

This server room uses a WxGoos-1 to monitor the cabinet environment plus five external sensors to monitor the air conditioning output, cabinet hot spots, return air temperature, power, and door position.

3

25 10 00 INTEGRATED AUTOMATION NETWORK EQUIPMENT

25 15 00 INTEGRATED AUTOMATION SOFTWARE

25 15 16 Integrated Automation Software for Control and Monitoring Networks

The HeavyWeather software provided with the weather station will be used to collect the data from the weather station. The WeatherGoose will be able to display its data collection directly to any web browser software that will be included on the computer.

25 30 00 INTEGRATED AUTOMATION INSTRUMENTATION AND TERMINAL DEVICES

25 36 00 INTEGRATED AUTOMATION INSTRUMENTATION AND TERMINAL DEVICES FOR ELECTRICAL SYSTEMS

25 36 13 Integrated Automation Power Meters

The energy consumed by branches of the house attached to individual circuit breakers will be monitored using a specialized submetering device. The submetering device will be mounted in a non-conductive junction box in the breaker closet, next to the circuit breaker panel. It will be connected to a low-voltage power supply that is mounted within the circuit breaker panel. It will also be connected to 21 current transformers, one for each of the branches of the house.

Each of these transformers will be clamped onto a high-voltage wire emanating from the appropriate circuit breaker. A set of three potential transformers supplied by the manufacturer of the submetering device and mounted within a non-conductive enclosure will also be mounted with screws adjacent to both the circuit breaker panel and the junction box containing the submetering device. The transformer has a high-voltage and low-voltage side. The neutral and phase 1 wires from high-voltage side of the transformer enclosure will be connected to the neutral bus and a circuit breaker, respectively, and four connections from the low-voltage side of the transformer enclosure will be connected to the submetering device inside the junction box.

The potential transformer was designed to accommodate three phases, which accounts for the two unused high-voltage connections. Those connections will be terminated using insulated twist connectors. A 14-AWG ground wire will also be connected between the ground bus in the circuit breaker panel and a screw on the submetering device. Finally, the submetering device will be directly connected to a serial port-to ethernet cable adapter partially contained within the junction box, to which a standard ethernet patch cable will be connected. This patch cable will be run through a low-voltage conduit to the computer in the house, where it will terminate at a similar ethernet cable-to-serial port adapter connected to an RS-232 serial port on the computer.

The following pages provide more details about the following components:

- 18W 24VDC DIN-Mounted Power Supply: Carlo Gavazzi SPD24181
- Electrical Submetering Device: TrendPoint EnerSure
- Current Sensor: CR Magnetics CR 3110-3000 Current Transformer
- Junction Box: Carlon E989SX Non-Conductive 8”x8”x4” Junction Box

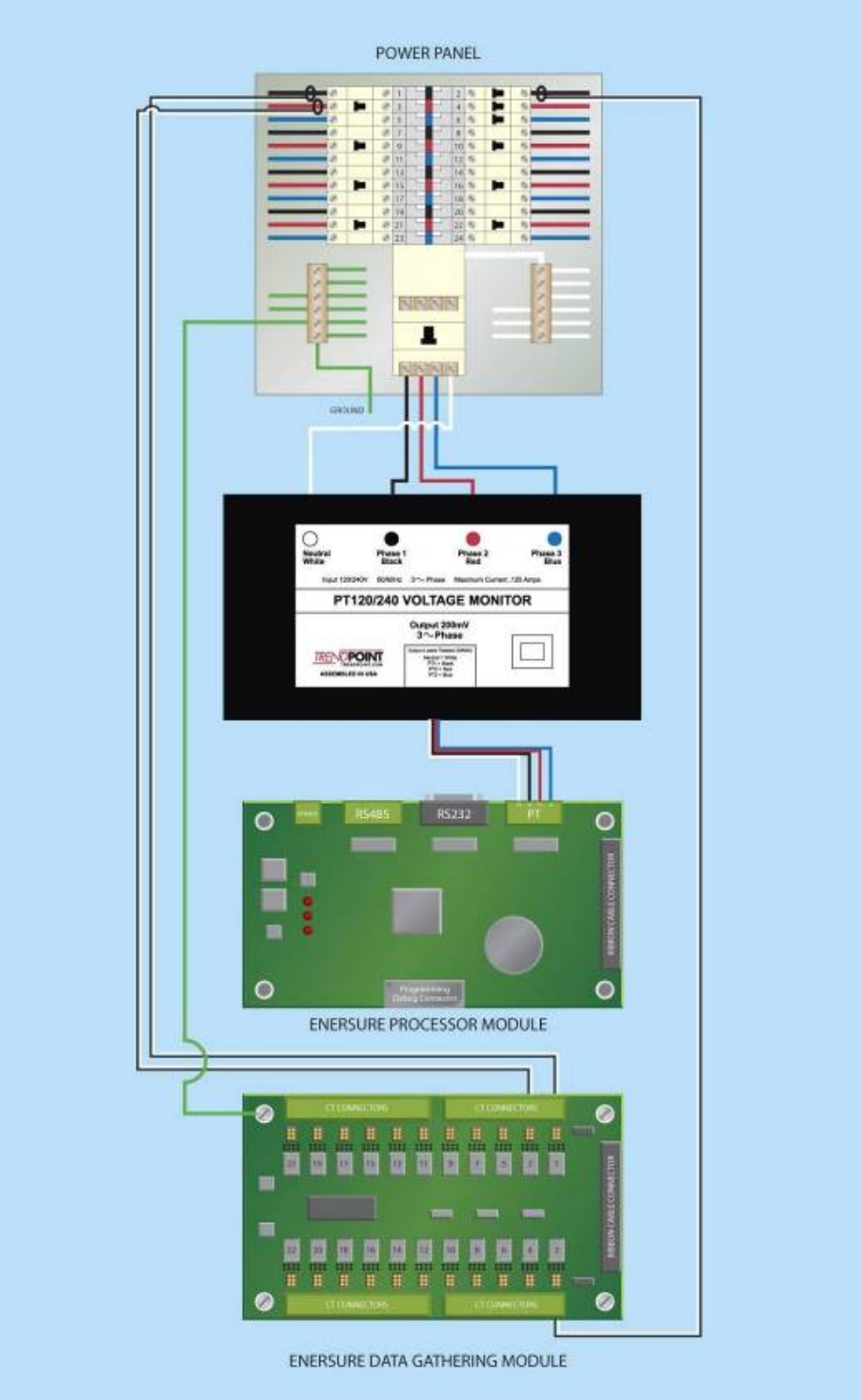

Manufacturer-recommended connection topology, slightly modified in our design to accommodate single-phase wiring.

Switching Power Supply
Type SPD 18W
DIN rail mounting

CARLO GAVAZZI

- Universal AC input full range
- Installation on DIN rail 7.5 or 15mm
- Short circuit protection
- Overload protection
- High efficiency
- LED indicator for DC power ON
- LED indication for DC low
- Internal input filter
- CE, TUV approved and cULus Listed

Product Description

The Switching power supplies SPD series are specially designed to be used in all automation application where the installation is on a DIN rail and compact dimensions and performance are a must.

Ordering Key

SP D 24 18 1 B

- Model
- Mounting (D = Din rail)
- Output voltage
- Output power
- Input Type
- Optional features

Input type: 1= single phase

Approvals

CE c UL us LISTED

Optional Features

Description	code
Spring connectors	B

Output performances

Model	Output Voltage (VDC)	Output Current (A)	Output Power (W)	Voltage Trim Range Min. (VDC)	Voltage Trim Range Max. (VDC)	DC on LED (VDC)	DC low LED (VDC) Min.	DC low LED (VDC) Max	Typical Efficiency
SPD05	5	3	15	4.5	5.75	4.5	3.75	4.5	75%
SPD12	12	1.5	18	10.8	13.8	10.8	9	10.8	77%
SPD15	15	1.2	18	13.5	17.25	13.5	11.25	13.5	77%
SPD24	24	0.75	18	21.3	28.8	21.6	18	21.6	77%

Output data

Line regulation	± 1%	Ouput Voltage accuracy	± 1%
Load regulation	± 2%	Temperature coefficient	± 0.02%/°C
Minimum load	0	Hold up Time Vi = 115Vac	20ms
Transient recovery time	300µs	Hold up time Vi = 230Vac	75ms
Ripple and noise	50mVpp		

Input data

Rated input voltage	100 - 240	Frequency range	47- 63 Hz
Voltage range		Inrush current	
AC	90 - 265 Vac	Vi= 115Vac	10A
DC	120 - 370 Vdc	Vi= 230Vac	18A

Specifications are subject to change without notice

1

CARLO GAVAZZI

Controls and Protections

Overload	110 – 135%	**Overvoltage Protection**	125 – 145%
Input Fuse	T2A/250Vac internal*	**Output Short Circuit**	Hiccup mode

General data (@ nominal line, full load, 25°C)

Ambient temperature	-10°C to 71°C	**Switching frequency**	100kHz
Derating (>60°C to +71°C)	3%/°C	**MTBF (MIL-HDBK-217F)**	800.000h
Ambient humidity	20 - 90%RH	**Case material**	Plastic: PC, UL94-V0
Storage	-25°C to +85°C	**Dimensions L x W x D**	90 x 22.5 x 115
Protection degree	IP20	**Weight**	150g
Cooling	Free air convection		

Norms and Standards

Insulation voltage I / O	3.000Vac min.	**CE**	EN50081-1 / EN55022 Class B EN50082-1 / EN55024 EN61000-3-2 EN61000-3-3
Insulation resistance	100Mohm min.		
UL / cUL	UL508, UL60950-1, UL1310 Class 2 Recognised		
TUV	EN60950-1		

* fuse not replaceable by user

Block diagrams

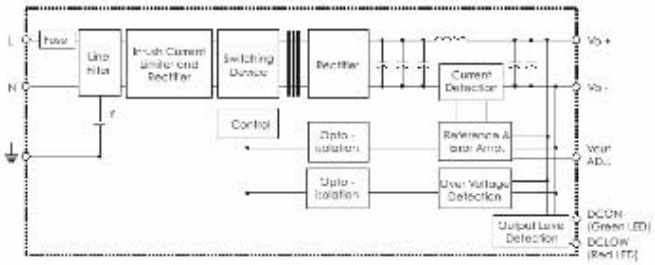

Pin assignement and front controls

Pin No.	Designation	Description
1	V+	Positive output terminal
2	V-	Negative output terminal
3	GND	Ground terminal to minimise High frequency emissions
4	N	Neutral input (no polarity with DC input)
5	L	Phase input (no polarity with DC input)
	Vout ADJ.	Trimmer for fine output voltage adjustment
	ON	DC output ready LED
	LO	DC low indicator LED

CARLO GAVAZZI

Derating Diagram

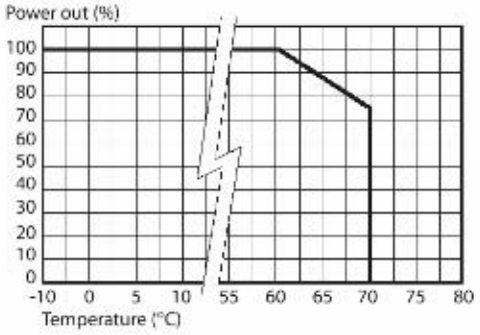

Mechanical Drawings

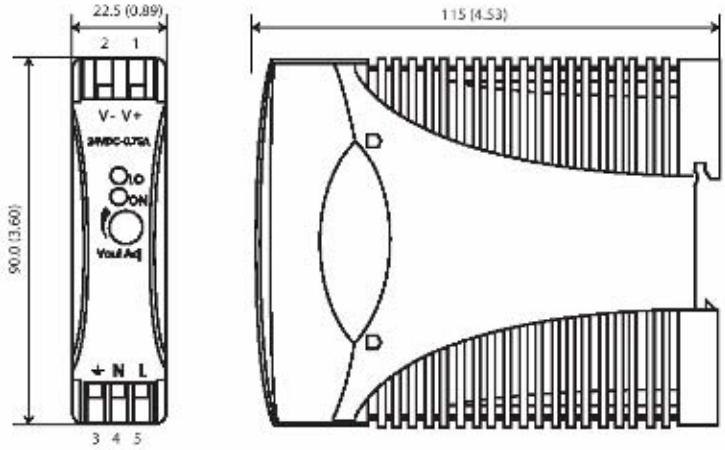

Installation

Ventilation and cooling	Normal convection All sides 25mm free space for cooling is recommended
Connector size range	Solid: 0.2 – 2mm² (AWG24-14) (use copper conductors only)

TrendPoint Systems provides easy-to-use, web-enabled environmental, power and security monitoring products.

EnerSure™

TRENDPOINT™

AFFORDABLY MONITOR ENERGY USE BY CIRCUIT

You Can't Manage What You Can't See

Facilities managers are looking to trim costs and rising energy bills are a prime target. When you want to control any line-item expense, you have to assign a budget to a department and then monitor each department's progress by a budget/forecast/variance process. Managing energy should be no different. The problem is that monitoring energy in this fashion has been prohibitively expensive. That is, until now.

EnerSure Lets You See and Manage Energy Consumption by User

EnerSure is the centerpiece for your organization's energy management plan. EnerSure works simply and attaches to each of your facilities circuits with NO downtime. The unit gathers utility data anad provides output via:

- Modbus RTU as its standard serial output
- Optional Ethernet output

Modular Architecture to Monitor any Number of Circuits

Enersure's modular architecture consists of a Processor Module and from 1–4 Data Gathering Modules (DGMs). Each DGM has inputs for 21 circuits. Up to 4 DGMs can be mounted on the Processor Board giving you up to 84 circuits with a single complete unit. The Processor Module collects data from the DGMs and makes it available in industry standard protocols via serial output or through the optional Ethernet port.

Precision Data is Key

EnerSure provides data with greater than 1% accuracy on all the following points:

- Voltage and Current (True RMS)
- Power Factor (the Hidden Cost of Energy)
- Peak Wattage (for Demand Charge Management)
- Energy (kilowatt hours)

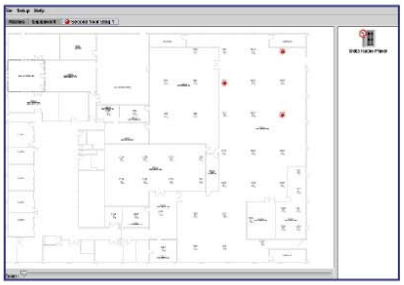

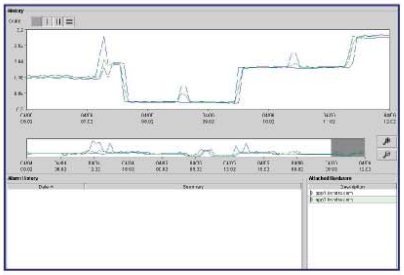

EnerSure data as seen through TrendPoint One.

EnerSure is covered under United States Patents 6,622,097 and 7,039,532

Additional U.S. and foreign patents pending.

EnerSure's Affordability and Ease-of-Use Make it the Right Choice

EnerSure's modular architecture and plug-and-play installation make it the right choice for almost any size facility. You can send its data directly into your spreadhseet application to update your progress vs. budget. For more advanced applications, TrendPoint Systems also offers an advanced Graphicaal User Interface (GUI) to make your data even easier to view and understand. TrendPoint One includes all of the following:

- Live floor map views showing the location, end user and status of each circuit
- Virtual circuit panels displaying the real-time data of each circuit within a panel
- Data trending for the last hour, day, month and year for each circuit.

111 Deerwood, Suite 200, San Ramon, CA 94583 | www.trendpoint.com | info@trendpoint.com | 925-855-0600

KNOWLEDGE *IS* POWER

TECHNICAL OVERVIEW

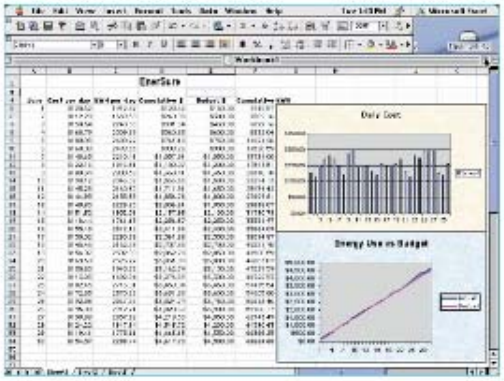

Accuracy:
+/-1%

Environmental:
Operating Temperature: 0° to 60° C
Humidity: Up to 90% RH (non-condensing)

EnerSure Data Gathering Module (DGM)
Size: 6.25" x 4.5" x 1.75" (159mm x 114mm x 44mm)
Current Transducers: Split core .250 VAC maximum output
Potential Transducers: 0–600 VAC input, .250 VAC output
Connectors: Eurostyle snap or screw terminals
UL Recognized
CE
FCC Part 15

EnerSure Processor Module:
Size: 6.25" x 4.5" x 1.70" (159mm x 114mm x 44mm)
Connectors to EnerSure DGM: Male Pin Connectors
CE
FCC Part 15

ENERSURE

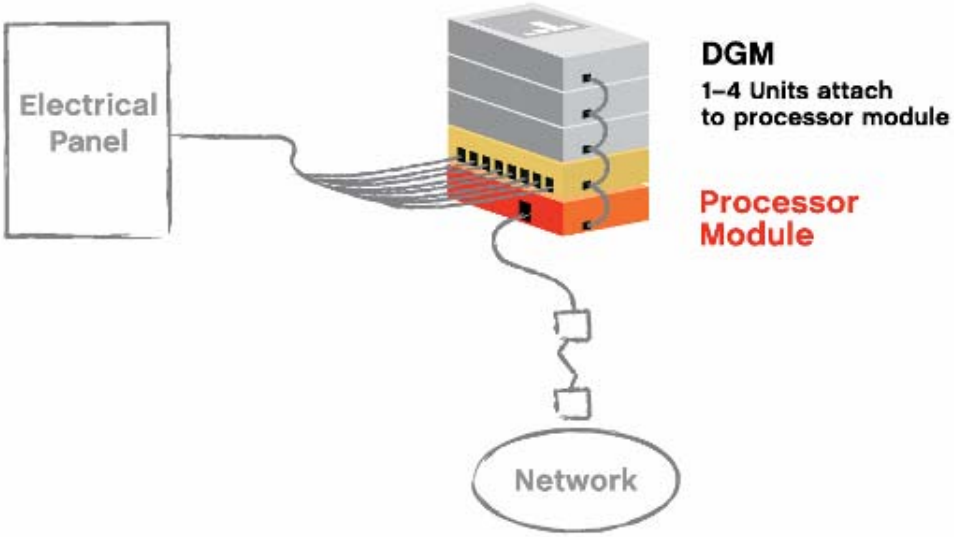

111 Deerwood, Suite 200, San Ramon, CA 94583 | www.trendpoint.com | info@trendpoint.com | 925-855-0600 KNOWLEDGE IS POWER

TRENDPOINT

EnerSure®

Monitoring and Targeting Energy Use at the Source

For any consumable to be managed, it must first be manageable. In most organizations, this means bringing that item into the budget/forecast/variance cycle at the department and individual level. While energy use and their consequent environmental effects are critical most organizations, they have simply received a pass on individual and departmental accountability, that is, up until now.

TrendPoint provides a unique and patented system for monitoring energy at the department and user-level. By monitoring each circuit, we assign a circuit to a user, each user to a department or group and each group to a site. Energy and carbon budgets can then be created and assigned to departments and individuals, allowing these costs and emissions to be brought into stardardized control practices.

EnerSure® is ***the*** Solution for monitoring energy-use and carbon footprint at the source level; the individual circuit. Government studies have consistently shown that submetering at the circuit-level produces a 10-12% reduction in energy use just by having access to this micro-level data. TrendPoint's unique solution allows users to see data by circuits to assign and monitor a range of parameters by individual user.

The EnerSure Unit

EnerSure is a Plug & Play hardware unit which provides a complete spectrum of data for each of your circuits. The following data points are available from the unit:

- RMS Voltage
- RMS Current
- Power Factor
- Wattage
- kWh

Further data can then be computed from kWh including the actual carbon emissions as a result of each kWh used. You can then assign energy and carbon budgets to individual users to ensure that each is meeting your energy and emissions targets.

EnerSure is simple to set up and use. It gains its simplicity from its modular architecture consisting of 2 components:

- A Processor Module – A central CPU for data computation and transmission
- Data Gathering Modules (DGM's) – Each DGM includes 22 power meter chips that continuously monitor the signals from individual circuits. Up to 4 DGM's can be attached per Processor Module

KNOWLEDGE *IS* POWER

111 Deerwood, Suite 200, San Ramon, CA 94583 925-855-0600
www.trendpoint.com info@trendpoint.com

The EnerSure Module

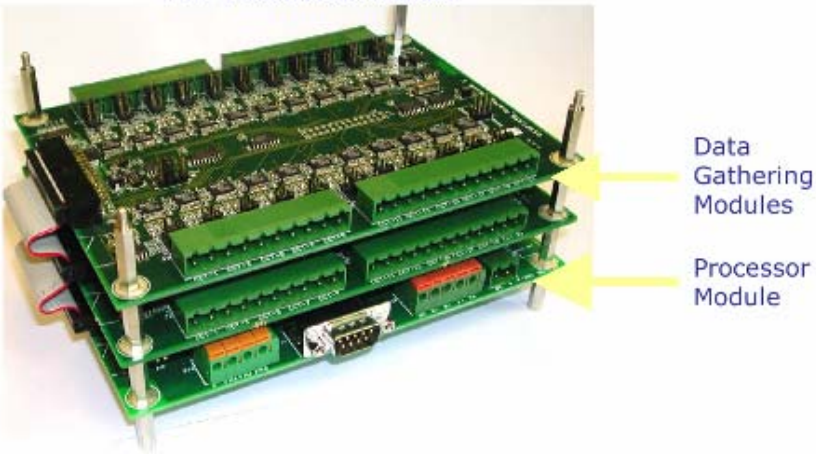

EnerSure samples its power inputs at the rate of several thousand times per second, giving it tremendous accuracy as it traces each sign-wave of power running through your circuits. Data output is provided through an RS232 serial connection. An external Ethernet port option is also available for direct network connectivity.

External polling intervals to the unit can be set to as little as 3 seconds. The net result is a product which provides and extremely precise set of power data.

Modular Architecture Detail

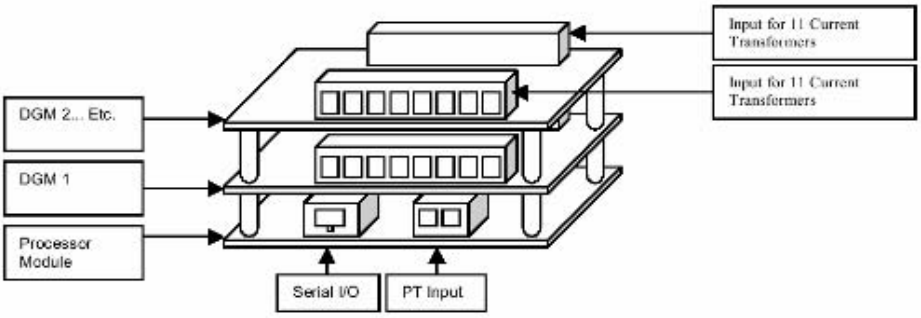

KNOWLEDGE *IS* POWER

111 Deerwood, Suite 200, San Ramon, CA 94583
www.trendpoint.com info@trendpoint.com

925-855-0600

EnerSure's modular architecture allows you to monitor power panels of less than 21 circuits all the way up to 84 circuits. Each EnerSure unit consists of a single Processor Module and one of more Data Gathering Modules (DGM's). The DGM's have inputs for 22 CT's (22 circuits). Each circuit's power parameters are measured individually by one of the 21 power meter chips on the DGM. By adding up to 4 DGM's per processor board you have the ability to monitor up to 84 circuits in a single EnerSure Module. The Processor Module consolidates all data from the DGM's and makes it available for remote transmission via serial or Ethernet.

Voltage Input

EnerSure operates by converting signals from voltage and current transformers into usable power data. Voltage information is provided by attaching a 3 phase Potential (voltage) Transformer to each of the 3 power leads and the neutral of the circuit breaker box. The PT can handle any voltage from 0-300 volts phase-to-neutral, 500 volts phase-to-phase. Each input phase wires are color-coded to match national electrical standards for ease-of-installation. An output voltage signal that is directly proportional to the input voltage is sent to the EnerSure Processor Board via a low-voltage signal.

The power to the EnerSure Module is provided by a 120 volt/24 VDC power module. All voltage on the EnerSure Module is low-power.

Current Input

Current signals are provided by attaching Current Transformers (CT's) around each circuit wire. The CT's may be either split-core or solid-core. Split-core units are perfect for retrofit projects as they can open and close around an existing wire. Solid core units are best for new installations as they are slightly more accurate and consist of a solid loop that slips over a newly installed wire. CT sizes are available from 50 amps - 4000 amps and different sizes may be connected to the same DGM.

Split-Core Current Transformer

Solid-Core Current Transformer

KNOWLEDGE *IS* POWER

111 Deerwood, Suite 200, San Ramon, CA 94583
www.trendpoint.com info@trendpoint.com

925-855-0600

Managing your EnerSure Data

TrendPoint provides a wealth of data viewing options for EnerSure. Our TrendPoint One™ Monitoring Software is one such option. TrendPoint One is geared toward mission critical facilities such as data centers, clean rooms and the like. It provides active floor maps, virtual circuit panels, high-granularity data, alerts and much more. TrendPoint One allows you to assign each circuit to a user and each user to a group – such as a department, company, etc. You may then turn over management to each user and department so that each can securely log-in and manage their own circuits. At the same time, all data is available at the Enterprise-level to your site manager.

EnerSure provides its data via Modbus, a building industry standardized protocol. Because of this, most BMS and EMS systems can directly connect to the EnerSure units. In addition, several third party organizations are creating specialty software applications for EnerSure. Applications underway include software for college campus monitoring, government facility monitoring, as well as small building and high-end home monitoring. For users who need TrendPoint One's features but also want to create customer applications, we provide access to the TrendPoint One database via an Open Database Connectivity (ODBC) option. This option allows users to manage their own site while feeding information upstream to accounting, ERP and other high-end systems.

EnerSure and TrendPoint One Form a Unique Solution

EnerSure represents the culmination of year's worth of research and development and is unmatched in its capabilities and value. It's perfect for monitoring power in data centers, high-density office buildings, government facilities and any site where power use and cost is an issue. Its small footprint, affordable cost, ease-of installation and its accuracy make it unique in the market place. EnerSure is available for world-wide distribution for both 60 Hz and 50 Hz power systems.

The System is Affordably Priced

EnerSure is priced in a manner which makes it very affordable to deploy for any-sized organization. The list price for a typical 42-pole panel is less than $65 per circuit. The EnerSure modules combined with the TrendPoint One server gives you complete knowledge of every circuit in your Enterprise. Our customers often report full payback for their system in less than one year, placing it well within the budgets of most Fortune 1000 companies and governmental agencies.

The chart below provides the price per unit and per circuit for a 42 circuit EnerSure.

EnerSure Components:	Price	Price/Circuit
EnerSure Processor Module	$ 495	$11.79
EnerSure Data Gathering Module (2)	$ 395	$18.81
Current Transformers (50 amp)	$ 25	$25.00
3 Phase Potential Transformer	$ 295	$ 7.02
Power Supply	$ 45	$ 1.07
Total for EnerSure Module	**$2675**	**$63.69**

KNOWLEDGE *IS* POWER

111 Deerwood, Suite 200, San Ramon, CA 94583
www.trendpoint.com info@trendpoint.com

925-855-0600

Split-Core Current Transformer

CR3110-3000, .40" WINDOW

The 3110 Split-core current transformer is designed to provide a low cost method to monitoring electrical current. A unique hinge and locking snap allows attachment without interrupting the current-carrying wire. High secondary turn will develop signals up to 10.0 Vac across a burden resistor.

SHOWN APPROX. FULL SIZE

Features

- Small Size
- Low cost
- High secondary turns
- Secure locking hinge

Applications

- Portable instruments
- Sub-metering
- Monitor motor loads

Part Number

CR3110-3000 Split-Core Current Transformer

Outline Drawing

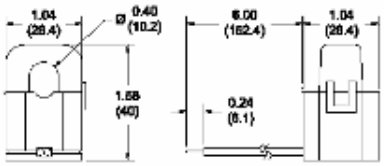

(mm)

Specifications

- Maximum Continuous Primary Current: 75 AAC
- Secondary Turns: 3000
- Wire Lead: AWG #18
- DC Resistance: 460 Ohms @ 20°C
- Frequency: 50/60 Hz

Internet Resources: http://www.crmagnetics.com/

- Pricing: pricing/3110.html
- Selection guides: transformer.html
  split-core.html

Agency Approval Data

- Wire Leads: AWG #18, UL 1015, 600 V, 105 °C
- Magnet Wire: UL E201757, .09 mm dia, 3UEW
- Dielectric (Hi-pot): 1000 V

Electrical Output

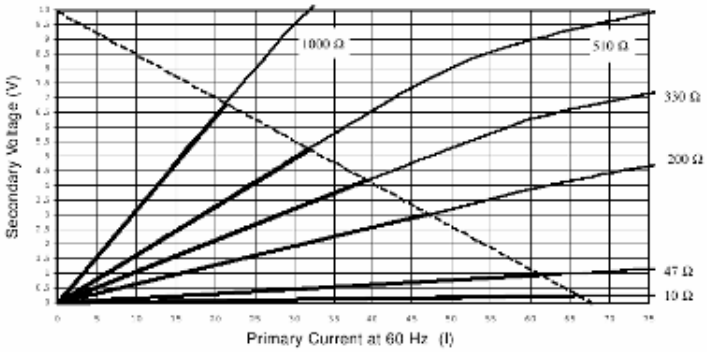

Bold lines indicate linear region according to formula:

$$V = \frac{I \times R}{3100}$$

V in Volts AC RMS
I in Amps AC RMS
R in Ohms

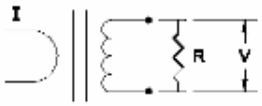

CR Magnetics, Inc. 544 Axminister Dr. Fenton MO USA 63026 V: 636.343.8518 F: 636.343.5119
Web: http://www.crmagnetics.com E-mail: sales@crmagnetics.com

Molded Nonmetallic Junction Boxes 6P Rated

Except where noted by †

LISTED E42728

It's another first from Carlon® - the first nonmetallic junction boxes UL Listed with a NEMA 6P rating per Section 314.29, Exception of the National Electrical Code. Manufactured from PVC or PPO thermoplastic molding compound and featuring foam-in-place gasketed lids attached with stainless steel screws, these rugged enclosures offer all the corrosion resistance and physical properties you need for direct burial applications.

Type 6P enclosures are intended for indoor or outdoor use, primarily to provide a degree of protection against contact with enclosed equipment, falling dirt, hose-directed water, entry of water during prolonged submersion at a limited depth, and external ice formation.

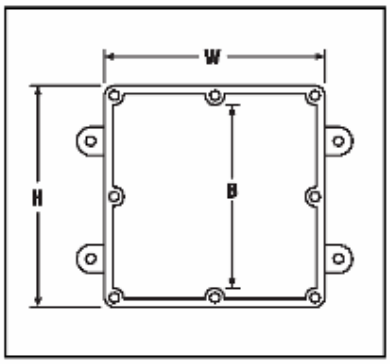

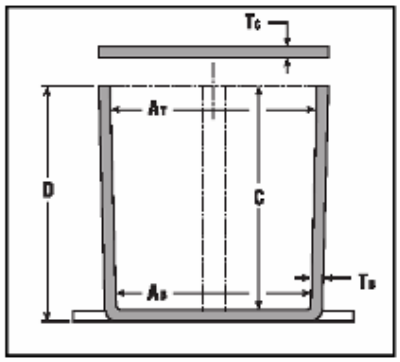

- All Carlon Junction Boxes are UL Listed and maintain a minimum of a NEMA Type 4/4x Rating.
- Parts numbers with an asterisk (*) are UL Listed and maintain a NEMA Type 6P Rating and Type 4/4X Rating.

Part No.	Size in Inches H x W x D	Std. Ctn. Qty.	Min A_T	Min. A_B	Min. B	Min. C	Ta Typical	Tc Typical	Material PVC	Material Thermo-plastic	Std. Ctn. Wt. (Lbs.)
E989NNJ-CAR*	4 x 4 x 2	5	3 11/16	3 5/8	N/A	2	.160	.155	X		3
E987N-CAR*	4 x 4 x 4	5	3 11/16	3 1/2	N/A	4	.160	.155	X		4
†E989NNR-CAR*	4 x 4 x 6	4	3 11/16	3 3/8	N/A	6	.160	.200	X		5
E989PPJ-CAR*	5 x 5 x 2	4	4 11/16	4 1/2	N/A	2	.110	.150		X	3
E987R-CAR*	6 x 6 x 4	2	6	5 5/8	N/A	4	.190	.190		X	3
E989RRR-UPC*	6 x 6 x 6	8	5 5/8	5 3/8	N/A	6	.160	.150		X	14
E989N-CAR	8 x 8 x 4	1	8	8	N/A	4	.185	.190		X	2
E989SSX-UPC	8 x 8 x 7	2	7 21/32	7 5/16	N/A	7	.160	.150		X	6
E989UUN	12 x 12 x 4	3	11 5/8	11 1/2	11 1/8	4	.160	.150		X	12
E989R-UPC	12 x 12 x 6	2	11 15/16	11 7/8	11 7/16	6	.265	.185		X	10

26 00 00 ELECTRICAL

26 01 00 OPERATION AND MAINTENANCE OF ELECTRICAL SYSTEMS

26 01 00.01 Temperature Data

The electrical system is greatly influenced by the temperature imposed on the house. Table 26.I shows temperature data obtained from National Climatic Data Center (www.ncdc.noaa.gov) for National Arboretum DC, MD (50 ft. elevation, 38º54 N latitude, 76º59 W longitude, 1971-2000 observation period), which is representative of the temperature in Washington, DC.

Table 26.I. Temperature data (in ºF) for National Arboretum DC, MD

	Mean			Extremes			
Month	**Daily Max**	**Daily Min**	**Mean**	**Highest Daily**	**Highest Month Mean**	**Lowest Daily**	**Lowest Month Mean**
Jan	43	24	33.5	80	42.2	-10	23.5
Feb	46.4	26	36.2	82	43.8	-1	24.1
Mar	55.3	33.4	44.4	90	50.1	9	38.4
Apr	66	42.2	54.1	94	59.5	18	49.7
May	75.8	52.4	64.1	98	71.5	25	60.2
Jun	84.4	61.8	73.1	101	77.2	42	68.9
Jul	88.9	66.9	77.9	104	83.1	47	74.8
Aug	87.4	64.8	76.1	104	79.6	42	72.4
Sep	80.4	56.9	68.7	102	75.1	34	64.3
Oct	69	44.1	56.6	94	63	20	49.9
Nov	58	35.7	46.9	87	52	10	41.2
Dec	47.7	28.2	38	81	44	0	26.3
Annual	66.9	44.7	55.8	104	83.1	-10	23.5

From Table 26.I, the design temperature for the house ranges from -10ºF to 104ºF (-23ºC to 40ºC). We will also assume that the operating temperature of the PV modules can reach up to 75ºC.

26 01 00.02 Electrical System

Fig. 26.1 shows a one-line diagram of the house electrical system. Please see the construction documents for more details. In Fig. 26.1, *each* PV (photovoltaic) array consists of 10 BP Solar BP 7185S modules. The 10 modules are configured as 5 parallel strings of 2 modules in series to meet the input voltage (< 120 V) and input current (< 48 A) ratings of the charge controller. The rainproof PSPV, from OutBack Power Systems, is used for the combiner boxes. The MX60, also from OutBack Power Systems, is used for the charge controllers to provide a 48-V DC bus. The battery stack consists of sixteen U1850HC deep-cycle lead-acid batteries, from Interstate Batteries, in a 4-by-4 configuration to also provide 48 V to the DC bus. The VFX3648 inverter, from OutBack Power Systems, is used for the inverters to convert 48 VDC to 120/240 VAC for the house loads. A John Deere AC-G5000S generator (or similar) might be used to the charge up the batteries.

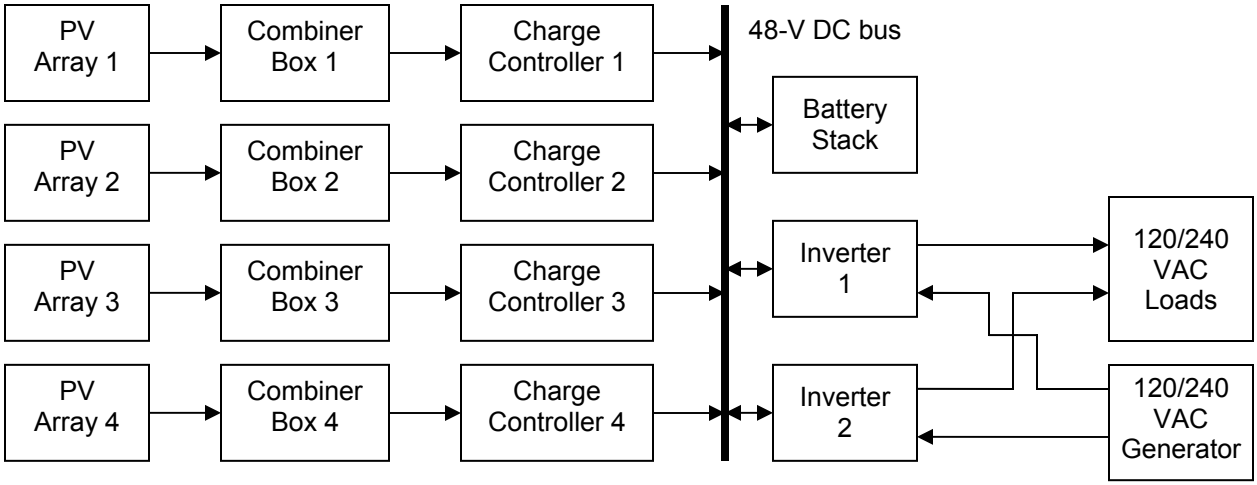

Fig. 26.1. One-line diagram of the electrical system

The longest *one-way* conductor length from the PV arrays to the combiner boxes is 45 ft. (in free air). The longest *one-way* conductor length from the combiner boxes to the charge controllers is 40 ft. (in conduit). The *one-way* conductor length from the battery stack to the DC bus is 12 ft (in conduit). Since the conductor lengths from the charge controllers to the DC bus are short, they are neglected in the calculations.

A good practice is to keep the voltage drop in the conductors from the PV arrays to the DC bus and from the battery stack to the DC bus below 3% of the 48-V system voltage. Since smaller conductors have higher resistances, it is decided to have 2% of the voltage drop from the PV arrays to the combiner boxes and the remaining 1% from the combiner boxes to the charge controllers. *Please note that all the cables in the electrical system will have* ***USE-2/RHH/RHW-2*** *ratings, except from bare conductors.*

26 01 00.03 House AC Loads

Table 26.II shows the *maximum* power ratings of the *main* loads of the house. Please note that many of the numbers shown have been exaggerated and are expected to be lower as the house nears completion. A few smaller loads, like smoke detectors and ground fault circuit interrupters, have not been included. At this stage of the design, there might also be a few unaccounted loads. Our simulations have shown that the maximum load, at any point during the day, does not exceed 7000 W.

Table 26.II. Main house loads

Load	**Power (W)**
Refrigerator/freezer	117
Clothes washer	1093
Clothes dryer	3000
House water heater	923
Heat recovery ventilator	67
Dehumidifier	650
Dishwasher	923
Water pump	745
Range	2400
Microwave	1000
TV/DVD player	66
Desktop computer	280
Lighting	800
3 heat pumps	1150
Electric car	1800

26 01 00.04 PV Modules to Combiner Boxes

Circuit Current: The BP 7185S PV module has a short-circuit current of 5.5 A, which results in a continuous current of the 6.88 A (5.5 × 1.25)

Overcurrent Device Rating: The 80% operation is 8.59 A (6.88 × 1.25). Therefore, an available 9-A circuit breaker, from Outback Power Systems, can be used.

Cable Sizing: The cable should also have a 30°C ampacity (no derating) of 8.59 A.

Cable Derating: Part of the cables will be in free air, but in direct contact with the back of the PV modules, reaching temperatures of up to 75°C. The ampacity of #18 USE-2/RHH/RHW-2 cable in free air at 75°C is 7.38 A (18 × 0.41), which is greater than the continuous current of 6.88 A found above.

Ampacity vs. Overcurrent Device: The 7.38-A derated ampacity of the #18 cable, however, is lower than the 9-A circuit breaker rating. A #16 cable, which has a derated ampacity of 9.84 A (24 × 0.41) in free air at 75°C, can be used instead.

Voltage Drop Calculations: The maximum total cable length between the PV arrays and the combiner boxes is 90 ft. A #16 cable has a resistance of 4.99 Ω per 1000 feet. At the peak current of 5.1 A of the BP 7185S module, the voltage drop is 2.29 V (5.1 × 90 × 4.99 ÷ 1000). At the system voltage of 48 V, 2.29 V represents a voltage drop of 4.77% (2.29 × 100 ÷ 48), which is much higher than the desired 2% drop, as mentioned above. A #12 cable, which has a resistance of 1.98 Ω per 1000 feet, results in 0.91 V (5.1 × 90 × 1.98 ÷ 1000) or 1.89% voltage drop and satisfies the 2% drop.

The derated ampacity of #12 cable at 75°C is 16.4 A (40 × 0.41). This exceeds the 80% operation of 8.59 A. Furthermore, a circuit breaker rated at 15 A can be used. This matches the maximum series fuse rating of the BP 7185S module. The 15-A circuit breaker rating is above the 8.59-A rating to conduct the module current and below the 16.4-A derated ampacity of the #12 cable. Twenty 15-A circuit breakers are needed for the 4 sets of 5 parallel strings.

Device Terminal Compatibility: *Please note that all the circuit breakers in the PV system are of hydraulic-magnetic type. According to the manufacturers, their operations are not influenced by temperature and, therefore, no temperature derating is required.* The combiner boxes will be placed far away from the back of the PV modules and in the shade. We will assume that the temperature inside the combiner boxes will not exceed 55°C. The 15-A circuit breakers have terminals rated at 60°C. The ampacity of #12 cables with 60°C insulation operating at 55°C in conduit is 10.3 A (25 × 0.41), which is higher than the 80% operation of 8.59 A. Thus, the operating temperature of the terminal can be expected to remain below 60°C.

26 01 00.05 Combiner Boxes to Charge Controllers

Circuit Current: The continuous current out of each combiner box is 34.4 A (5 × 6.88).

Overcurrent Device Rating: The 80% operation is 43 A (34.4 × 1.25).

Cable Sizing: The cable should also have a 30°C ampacity of 43 A (no derating) and can be protected by a 50-A circuit breaker, available from Outback Power Systems.

Cable Derating: These cables will be enclosed in conduits on roof and might be exposed to the sun at times. According to NEC 310.10 FPN No. 2, the cables inside the conduits might experience up to 17°C above ambient temperature (40°C from Table I). At around 57°C, the temperature correction factor for USE-2/RHH/RHW-2 cables in conduit is 0.71. The derated ampacity of #8 cable is 39.1 A (55 × 0.71), which exceeds the 34.4-A continuous current.

Ampacity vs. Overcurrent Device: The problem is that the 39.1-A derated ampacity is lower than the 50-A rating for the circuit breaker. Therefore, a #6 cable with a 53.3-A (75 × 0.71) derated ampacity should be used.

Voltage Drop Calculations: There is a maximum total cable length of 80 ft. between the combiner boxes and the charge controllers. A #6 cable has a resistance of 0.491 Ω per 1000 feet. At the peak current of 25.5 A (5.1 × 5), the voltage drop is 1.00 V (25.5 × 80 × 0.491 ÷ 1000) or 2.1% (1.00 × 100 ÷ 48), exceeding the desired 1% drop mentioned previously. On the other hand, a #2 cable, which has a resistance of 0.194 Ω per 1000 feet, results in 0.396 V (25.5 × 80 × 0.194 ÷ 1000) or 0.83% (0.396 × 100 ÷ 48) voltage drop, satisfying the 1% drop.

The derated ampacity of #2 cable at 57°C in conduit is 92.3 A (130 × 0.71). This exceeds the 80% operation of 43 A. A circuit breaker rating of 60 A, which is above the 43-A rating and below the 92.3-A derated ampacity of the cable, can thus be used.

The four 60-A circuit breakers are connected to a 4-pole Xantrex GFPD, which is then connected to the four MX60 charge controllers. These are then connected to the DC bus through four 80-A circuit breakers (which were already bought before these calculations were made), still using #2 cables.

Device Terminal Compatibility: The terminals of the 60-A circuit breakers, GFPD, and 80-A circuit breakers are rated at 60°C, 75°C, and 85°C, respectively. All of them are enclosed in the FW1000-DC breaker box, where the temperature can be assumed to stay close to the ambient temperature of 40°C. The ampacity of #2 cables with 60°C insulation operating at 40°C is 77.9 A (95 × 0.82), which is higher than the 80% operation of 43 A. Thus, the operating temperature of the terminal will remain below 60°C (and below 75°C and 85°C obviously).

Equipment-Grounding Conductor: According to the NEC 690.45, the equipment-grounding cables must be able to carry the 34.4-A continuous current, which require a #10 (5.26 mm^2) cable in conduit. Since the cable size from the combiner boxes to the charge controllers was increased to keep the voltage drop within 3%, NEC 250.122(B) also requires that the equipment-grounding conductor size be increased by the same ratio. The 43-A 80% operation requires a #8 (8.37 mm^2) cable in conduit, but a #2 (33.62 mm^2) cable was selected. This represents a ratio of 4:1. Therefore, a #4 (21.15 mm^2) cable is required for the equipment-grounding conductor.

Please note that, for ease of wiring and to avoid the use of bare stranded conductor, solid bare #6 copper conductors will be used for the equipment-grounding conductors from the PV modules to the combiner boxes. Also, ILSCO GBL4-DBT lugs will be attached at the grounding points of the PV modules with stainless steel 10 screws, nuts, and lock washers to provide proper grounding connections. Before attaching the lugs, any anodization or oxidation will be removed from the aluminum frames of the PV modules, which will then be coated with a thin film of anti-oxidant.

Conduit: The conduit has to enclose two #2 cables and one #4 equipment-grounding cable. Based on NEC Table C-10, a 1.25-inch Rigid PVC Schedule 40 conduit, which also matches the size of the combiner box knock-out hole, is required. An electrical metallic tubing (EMT) of the same size will be used as soon as the cables enter the electrical closet.

26 01 00.06 Battery Stack to DC Bus

Circuit Current: The current flowing from the battery to the DC bus is dictated by the ratings of the inverters being used. To withstand the maximum house load of 7000 W, two VFX3648 inverters, from OutBack Power Systems, are needed. Each inverter has a nominal DC input voltage of 48 V and a continuous power rating of 3600 W at 120 VAC 60 Hz. According to the datasheet, the typical inverter efficiency is 93%, but it is assumed to be around 90% at the lowest input battery voltage of 42 V. All this results in a DC input current of 190 A (2 × 3600 ÷ 0.90 ÷ 42).

Overcurrent Device Rating: After 80% cable derating, an ampacity of 238 A (190 ÷ 0.80) is required.

Cable Sizing and Derating: To meet this requirement in conduit at 40°C (this conduit is not subject to direct sunlight), a 90°C 250 kcmil (168 mm^2) cable has to be used to provide an derated ampacity of the 264 A (290 × 0.91). To avoid the use of bigger cables and because of circuit breakers availability, two #2/0 cables (67 mm^2) can be paralleled. Since the conduit now encloses 4 current-carrying cables, a conduit fill correction factor of 0.8 has to be used. The derated ampacity is then 284 A (2 × 195 × 0.8 × 0.91).

Voltage Drop Calculations: A #2/0 cable has a resistance of 0.0967 Ω per 1000 feet. With 4 current-carrying cables, the total cable length from the battery stack to the DC bus is 48 ft. The cable resistance is thus 0.00464 Ω (0.0967 × 48 ÷ 1000). With 190-A continuous current, the voltage drop is 0.88 V (190 × 0.00464) or 1.83% (0.88 × 100 ÷ 48), satisfying the goal of 3% voltage drop. A 250-A battery disconnect can be used to protect the cables and carry the 190-A continuous current. The ILSCO H2L-13-1 terminal plates will be bolted to the studs of the 250-A circuit breakers to provide proper connections for the dual #2/0 cables to the 250-A breakers.

Device Terminal Compatibility: The terminals of the 250-A circuit breakers are rated at 85°C. The ampacity of dual #2/0 cables with 75°C (because there is no 85°C column in the NEC Table 310.16) insulation operating at 40°C is 308 A (2 × 175 × 0.88), which is higher than the 80% operation of 238 A. Thus, the operating temperature of the terminal will remain below 75°C and, thus, 85°C.

Conduit: A 2.5-inch Rigid PVC Schedule 40 conduit will be used to carry the four #2/0 cables (NEC Table C-10).

26 01 00.07 Battery Interconnects

The 4-by-4 battery stack will be interconnected as shown in the construction document. The 190-A continuous current is expected to be split among the 4 strings, resulting in each string carrying about 48 A. However, over time, one string might have to carry more current than the other strings. A #2/0 USE-2 copper conductor that has an ampacity of 300 A in free air at 30°C will be used to interconnect the batteries. In the worst case, one string would be able to easily carry all of the 190-A current.

26 01 00.08 DC Bus to Inverters

The 190-A continuous current is also split between the two inverters. As per the inverter manual, a #2/0 cable will be used to connect each inverter to the DC bus. At 40°C in conduit, a #2/0 cable has a derated ampacity of 177 A (195 × 0.91). This is much higher than 95 A (190 ÷ 2). The minimum recommended 175-A DC breaker for the inverters can thus be used.

Device Terminal Compatibility: The terminals of the 175-A circuit breakers are rated at 85°C. The ampacity of #2/0 cable with 75°C insulation operating at 40°C is 154 A (175 × 0.88), which is higher than the 95-A continuous current. Thus, the operating temperature of the terminal can be expected to remain below 85°C.

Equipment-grounding conductor: According to NEC 250.122, a 175-A circuit breaker requires a #6 equipment-grounding conductor.

Conduit: No conduit is required since the inverters are right next to the breaker boxes. All the cables run from inverter to the breaker boxers (and vice versa) through knock-out holes.

All the DC buses and DC circuit breakers are enclosed in the FW1000-DC enclosure, from OutBack Power Systems. Please note that all the DC breakers have a voltage rating of 125 VDC, which is much higher than the highest 112-V (V_{OC} × 1.25 × 2 = 44.8 × 1.25 × 2) DC voltage in the electrical system.

26 01 00.09 Generator to Inverters

At 240 VAC, the 4.4-kW generator provides a continuous output current of 18.3 A (4400 ÷ 240). An all-weather rubber cord (no more than 15 ft. in length), containing four #12 conductors, with red, black, white, and green insulations, will be used in free air. The rubber cord will be fitted with two 4-prong twist-lock connectors, male for the generator side and female for the house side. The male connector will plug into the generator while the female connector will connect to a male receptacle near the AC enclosure. The wires coming from this receptacle will be terminated in a two-pole 20-A circuit breaker, which matches the breaker on the generator. The circuit breaker provides overcurrent protection and can be used to disconnect the generator. *Please note that the generator will only be connected to the system when the battery stack needs to be charged. When the generator is not connected, the AC transfer switches within the inverters will be automatically deactivated and the circuit breaker will be set to its OFF position to prevent the male receptacle from being energized.*

Equipment-grounding conductor: The #12 conductor with green insulation of the rubber cord will be used as the equipment-grounding conductor.

Conduit: No conduit is required since the rubber cord is rated for all weather conditions.

26 01 00.10 Inverters AC Inputs and Outputs

At 120 VAC, the continuous AC output current for one of the inverters is 30 A (3600 ÷ 120). On the other hand, in the battery charging mode, based on the inverter manual, the continuous AC input current for one of the inverters is 20 A. After the NEC 1.25 correction factor, this ampacity increases to 37.5 A (30 × 1.25). #6 cables, which have an ampacity of 68.3 A in conduit at 40°C (75 × 0.91), will be used. Four 60-A circuit breakers will be used for both the AC outputs and AC inputs of the inverters.

Device Terminal Compatibility: The terminals of the 60-A circuit breakers are rated at 85°C. The ampacity of #6 cable with 75°C insulation operating at 40°C is 57.2 A (65 × 0.88), which is higher than 37.5 A. Thus, the operating temperature of the terminal can be expected to remain below 85°C.

Equipment-grounding conductor: According to NEC 250.122, a 60-A circuit breaker requires a #10 equipment-grounding conductor, but to avoid buying different cable sizes, a #8 equipment-grounding conductor will be used.

Conduit: No conduit is required since the inverters are right next to the breaker boxes. All the cables run from inverter to the breaker boxers (and vice versa) through knock-out holes.

26 01 00.11 House AC System

Please refer to the construction documents for a detailed layout of the house AC system. The different circuit branches require sixteen 20-A, one 30-A, two 20-A AFCI, one dual-pole 15-A, and two dual-pole 40-A AC circuit breakers. The AC buses and AC circuit breakers are enclosed in the FW1000-AC enclosure, from OutBack Power Systems.

26 01 00.12 Summary

Table 26.III provides a summary of the continuous current, 80% operation, cable size, derated ampacity, and circuit breaker rating for each branch of the electrical system. Where applicable, the equipment-grounding conductor size and conduit size are also provided.

Table 26.III. Calculations summary

Branch	Continuous Current (A)	80% Operation (A)	AWG Conductor Size	Conductor Derated Ampacity (A)	Circuit Breaker Rating (A)	Equipment Grounding Conductor	Conduit Size (″)
PV to Combiner Boxes	6.9	8.6	#12	16.4	15	#6 bare	None
Combiner Boxes to Charge Controllers	34.4	43.0	#2	92.3	60	#4	1.375
Charge Controllers to DC Bus	34.4	43.0	#2	92.3	80	#4	None
Battery to DC Bus	190	238	Dual #2/0	284	250	None	2.5
Battery Interconnects	48 to 190	N/A	#2/0	300	N/A	N/A	None
DC Bus to Inverters	95	119	#2/0	177	175	#6	None
Generator to Inverters	18.3	N/A	#12	N/A	2P/20	#12	None
Inverters inputs and outputs	30	37.5	#6	68.3	60	#8	None

26 06 00 SCHEDULES FOR ELECTRICAL

Table 26.IV gives a list of the components mentioned above, along with the page numbers on which their datasheets can be found.

Table 26.IV. Components list

Component	Manufacturer	Model	Qty	Datasheet Page(s)
PV Module	BP Solar	BP 7185S	40	246–247
Combiner Box	OutBack Power Systems	PSPV	4	248
Charge Controller	OutBack Power Systems	MX60	4	249–250
4-Pole GFPD	Xantrex	PVGFP4	1	251
Battery	Interstate Batteries	U1850HC	16	252 (*MSDS*: 253–254)
Inverter	OutBack Power Systems	VFX3648	2	255–256
Generator	John Deere	AC-G5000S	1	257–258
DC Enclosure	OutBack Power Systems	FW1000-DC	1	259–260
AC Enclosure	OutBack Power Systems	FW1000-AC	1	259–260
15-A DC Breaker	OutBack Power Systems	OBB-15-125VDC-DIN	20	261
60-A DC Breaker	OutBack Power Systems	OBB-60-125VDC120VAC-PNL	4	262
80-A DC Breaker	OutBack Power Systems	OBB-80-125VDC-PNL	4	262
250-A DC Breaker	OutBack Power Systems	OBB-250-125VDC-PNL	2	262
175-A DC Breaker	OutBack Power Systems	OBB-175-125VDC-PNL	2	262
2P/20-A AC Breaker	Square D	QOU220	1	263
60-A AC Breaker	Square D	QOU160	4	263
20-A AC Breaker	OutBack Power Systems	OBB-20-120VAC-DIN	17	262
30-A AC Breaker	Square D	QOU130	1	263
20-A AFCI Breaker	TBD	TBD	2	--
2P/15-A AC Breaker	OutBack Power Systems	OBB-15D-240VAC-DIN	1	262
2P/40-A AC Breaker	Square D	QOU240	2	263

185 Watt Photovoltaic Module – Saturn Technology

BP 7185

3022E-2 07/06

The BP 7185S forms part of the high efficiency Saturn 7 Series "real power" range of solar modules. Our industry leading warranty is based on nominal power output, meaning more power for a longer period of time. The bypass diodes use the IntegraBus™ technology, which limits the loss of energy in the event of partial shadowing affecting the module. Being one of the largest, most powerful modules manufactured by BP Solar, the BP 7185S is ideal for installations where high power is needed in a limited area.
The BP 7185S has been especially designed for grid connect applications such as large commercial roofs, residential systems and photovoltaic power plants.

Performance

Rated power	185W
Tolerance	-0/+2.5%
Module efficiency	14.7%
Nominal voltage	24V
Warranty	90% power output over 12 years 80% power output over 25 years Free from defects in materials and workmanship for 5 years

Configuration

BP 7185S	Clear Universal Frame, sealed junction box, cables with Multi-Contact connectors.

Qualification Test Parameters

Temperature cycling range	-40ºC to +85ºC for 200 cycles
Damp heat test	85ºC and 85% relative humidity for 1000h
Front & rear load test (eg: wind)	2400Pa
Front load test (eg: snow and wind)	5400Pa
Hailstone impact test	25mm hail at 23m/s from 1m distance

Quality and Safety

- Manufactured in ISO 9001 and ISO 14003 certified factories
- Conforms to European Community Directive 89/33/EEC, 73/23/EEC, 93/68/EEC
- Certified to IEC 61215

Module power measurements calibrated to World Radiometric Reference from ESTI (European Solar Test Installation) at Ispra, Italy.

Framed modules certified by TÜV Rheinland as Safety Class II (IEC 60364) equipment for use in systems up to 1000V.

Framed modules listed by Underwriters Laboratories for electrical and fire safety (Class C fire rating).

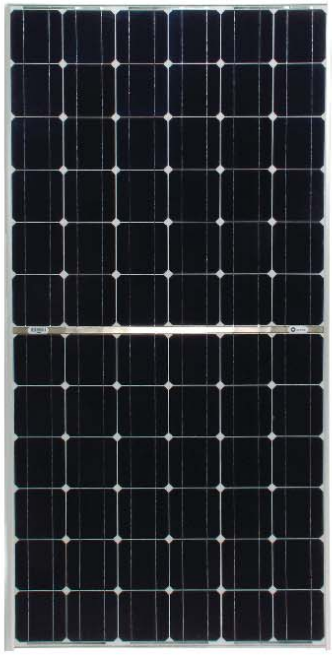

BP 7185S scale 1:14

Efficiency (%)

9-11	11-12	12-13	13-14	14-15

BP 7185S I-V Curves

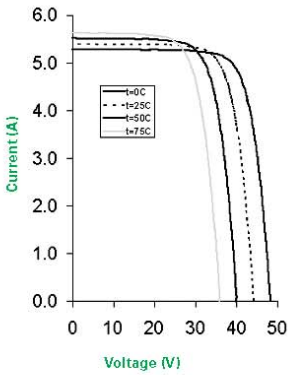

185 Watt Photovoltaic Module

BP 7185

3022E-2 07/06

Module Diagram

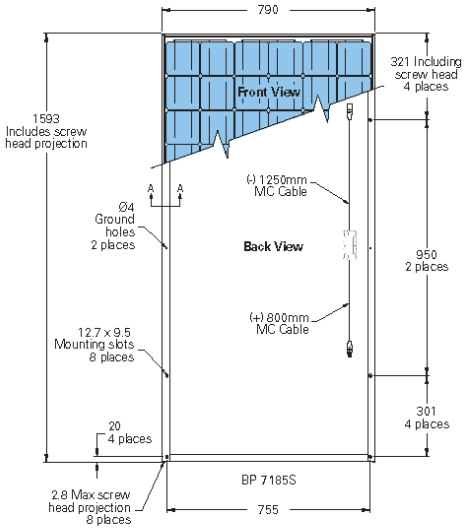

All dimension in mm with a tolerance of +/-3 mm

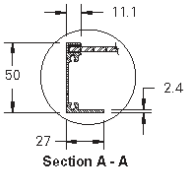

Self-tapping grounding screw, instruction sheet and warranty document included with each module.

Typical Electrical Characteristics	BP 7185
Warranted minimum power*	185W
Voltage at MPP (V_{mpp})	36.5V
Current at MPP (I_{mpp})	5.1A
Short circuit current (I_{sc})	5.5A
Open circuit voltage (V_{oc})	44.8V
Temperature coefficient of I_{sc}	(0.065±0.015)%/K
Temperature coefficient of V_{oc}	-(160±20)mV/K
Temperature coefficient of P	-(0.5±0.05)%/K
NOCT (Air 20°C; Sun 800W/m^2; wind 1m/s)	47±2°C
Maximum series fuse rating	15A
Maximum system voltage	1000V (IEC 61215 rating) 1000V (TÜV Rheinland rating)

*As measured by BP Solar test equipment rounded to the nearest watt.

Standard test conditions - irradiance of 1000W/m^2 at an AM1.5G solar spectrum and a cell temperature of 25°C.

Mechanical Characteristics	BP 7185
Dimensions (mm) (Overall tolerances +/-3mm)	1593 x 790 x 50
Weight (kg)	15.4
Frame	Clear anodised aluminium alloy type 6063T6. Silver Universal frame.
Solar cells	72 cells (125mm x 125mm) configured geometrically in a 6 x 12 matrix connected in series.
Output cables	3.3mm^2 cable with weatherproof Multi-Contact connectors. Asymmetrical cable lengths - 1250mm (-) and 800mm (+).
Diodes	IntegraBus™ technology includes for every 12 cells a Schottky bypass diode integrated into the printed circuit board bus.
Construction	Front: High transmission 3.2mm tempered glass. Rear: White polyester; encapsulant: EVA.

Your BP Solar Distributor:

www.bpsolar.com

This publication summarises product warranty and specifications which are subject to change without notice.

Printed on CFC-free paper produced in a neutral, acid-free environment from sustainable sources. 100% recyclable.

PSPV

The rainproof PSPV is a solar array combiner which can be used with a wide variety of system configurations and solar module types. Approved for installation on both vertical and angled surfaces with a slope as little as 3-in-12 pitch - or pole mounted (brackets not included), the PSPV is designed to provide NEC code compliant series over-current protection of the wiring of multiple PV modules or sub arrays for connection to charge controllers, inverters or other system components. The PSPV is easily field configurable to match your PV system design and amperage requirements. For negative or positive grounded PV systems.

Breaker Configuration Diagram

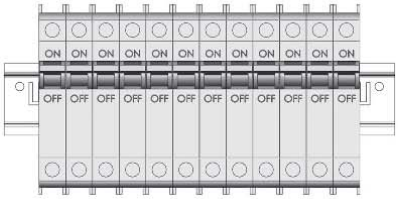

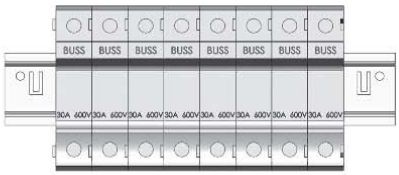

Holds up to twelve OutBack Power Systems DIN mounted breakers for PV array configurations of 12 to 72 VDC systems with a maximum open circuit voltage of 150 VDC or use eight OutBack Power Systems OBF "touch safe" type fuse holders for high voltage systems with a maximum open circuit voltage of 600 VDC

Knockouts

Left
- (1) ¾" knockout (0.875" diameter)

Right
- (1) ¾" knockout (0.875" diameter)

Back
- (1) combination 1" (1.093" diameter) 1 3/8" (1.375" diameter) knockout

Bottom
- (1) combination 1" (1.093" diameter), 1 3/8" (1.375" diameter) knockout
- (8) ¾" knockout (0.875" diameter)

Model: PSPV

Description: Powder coated aluminum PV array combiner box

Includes: Enclosure, dual combining bus bars, one terminal bus bar, two #1/0 AWG set-screw compression type box lug terminals and one #1/0 AWG ground lug

Unit Dimensions (H x W x D)	Shipping Dimensions (H x W x L)	Shipping Weight	Enclosure Rating
13.1 x 8.8 x 3.4" (34.1 x 22.4 x 8.6 cm)	16 x 12 x 7" (40.6 x 30.5 x 17.8 cm)	5 lbs (2.3 kg)	Type 3R (IP44)

MX60

Maximum Power Point Tracking Charge Controller

OutBack Power Systems

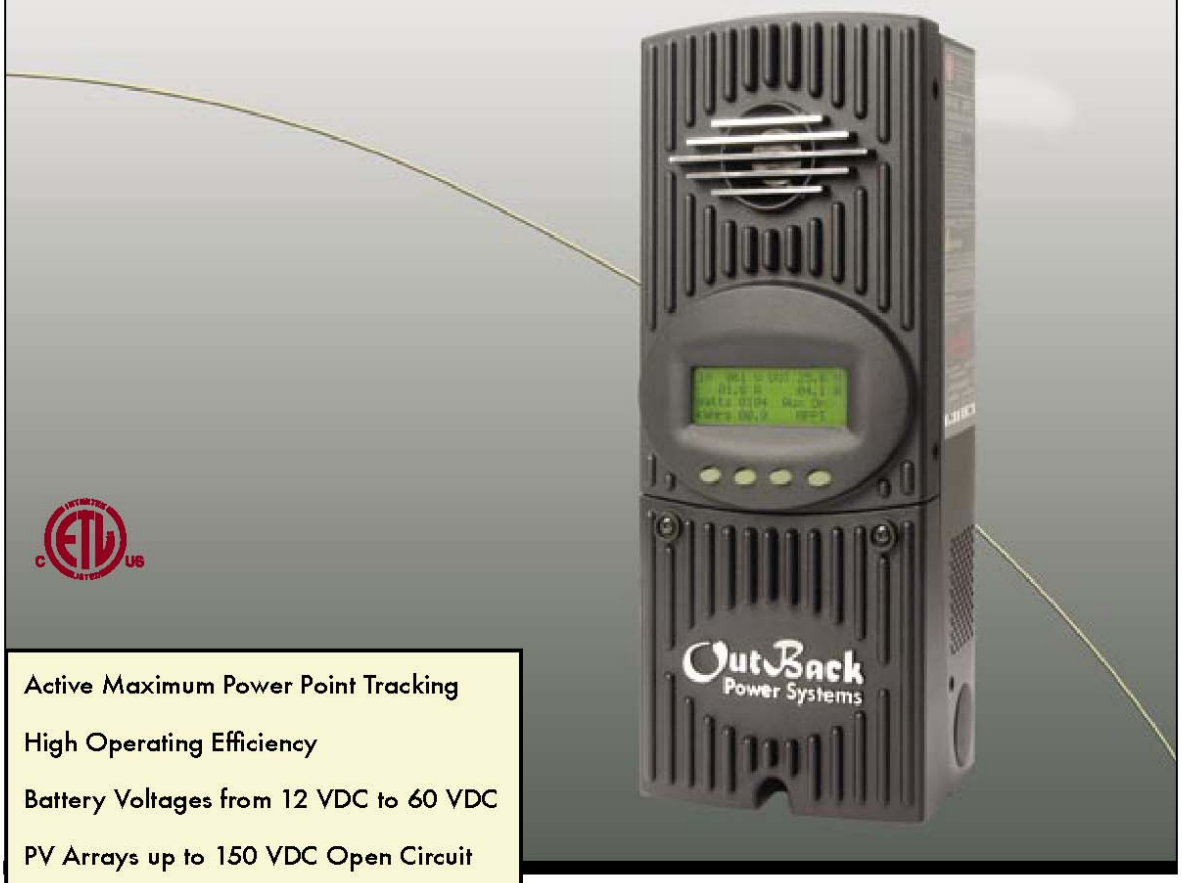

- Active Maximum Power Point Tracking
- High Operating Efficiency
- Battery Voltages from 12 VDC to 60 VDC
- PV Arrays up to 150 VDC Open Circuit
- Negative or Positive Ground Systems
- Built-in Data Logging
- Standard 2 Year Warranty

The MX60 is on the cutting edge of charge controller design. OutBack's real time active Maximum Power Point Tracking (MPPT) system ensures that your solar array is operating at its peak power point regardless of age, shading or environmental conditions. A peak operating efficiency of 98% maximizes your PV array's performance. The MX60's wide DC input range and 60 amp DC output current rating for 12, 24 or 48 VDC systems provides unmatched flexibility in the wiring as well as the sizing of your solar array. The ability to step-down a high voltage solar array to a low voltage battery can save you money by reducing the size of wire required and making the installation simpler and faster.

All of the MX60's status information is displayed on the large built-in 3.1" (8 cm) backlit LCD screen and OutBack's exclusive system networking allows your MX60 to communicate with the rest of your OutBack products for complete integration and high performance operation. Monitoring the performance of your solar array investment is easy through the use of the built-in data logging system or via the MATE and optional PC software (available separately).

The MX60 is the only choice when you demand a high performance, efficient and customizable charge controller for your advanced power system.

MX60 Specifications

Nominal Battery Voltages		12, 24, 32, 36, 48, 54 or 60 VDC (Single model - selectable via field programming)
Output Current		60 amps maximum with adjustable current limit for smaller systems
Maximum Solar Array Size		12 VDC systems 800 Watts / 24 VDC systems 1600 Watts / 48 VDC systems 3200 Watts
PV Open Circuit Voltage (VOC)		150 VDC absolute maximum coldest conditions / 140 VDC start-up and operating maximum
Standby Power Consumption		Less than 1 Watt
Charging Regulation		Five Stages: Bulk, Absorption, Float, Silent and Equalization
Voltage Regulation Set points		10 to 80 VDC user adjustable with password protection
Equalization Voltage		Up to 5.0 VDC above Absorb Set point Adjustable Timer - Automatic Termination when completed
Battery Temperature Compensation		Automatic with optional RTS installed / 5.0 mV per °C per 2V battery cell
Voltage Step-Down Capability		Can charge a lower voltage battery from a higher voltage PV array
Power Conversion Efficiency	Typical	98% at 60 amps with a 48 V battery and nominal 48 V solar array
Status Display		3.1" (8 cm) backlit LCD screen with 4 lines with 80 alphanumeric characters total
Remote Interface		Proprietary network system using RJ 45 Modular Connectors with CAT 5e Cable (8 wires)
Data Logging		Last 64 days of operation - amp hours, watt hours and time in float for each day along with total accumulated
		amp hours, kW hours of production
Hydro / Wind Turbine Applications		Consult factory for approved turbines
Positive Ground Applications		Requires two pole breakers for switching both positive and negative conductors on both solar array
		and battery connections (HUB-4 and HUB-10 are not recommended for use in positive ground applications)
Operating Temperature Range		Minimum -40° to maximum 60° C (Power capacity of the controller is derated when above 25° C)
Environmental Rating		Indoor Type 1
Conduit Knockouts		Two ½" and ¾" on the back; One ¾" and 1" on each side; Two ¾" and 1" on the bottom
Warranty		Standard 2 year / Optional 5 year
Weight	Unit	11.6 lbs (5.3 kg)
	Shipping	14 lbs (6.4 kg)
Dimensions (H x W x L)	Unit	13.5 x 5.75 x 4" (40 x 14 x 10 cm)
	Shipping	18 x 11 x 8" (46 x 30 x 20 cm)
Options		Remote Temperature Sensor (RTS), HUB and MATE

OutBack Power Systems

Main Office:
19009 62nd Avenue NE
Arlington, WA 98223 USA
Phone: (360) 435.6030
Fax: (360) 435.6019

European Office:
Urb. Garraf II Buzón 214
08860 Les Botígues de Sitges
Barcelona, ESPAÑA
Phone: (+34) 600.843.845

www.outbackpower.com

Available From:

Xantrex PVGFP4

Note: the following picture is extracted from Trace Engineering, Photovoltaic Ground Fault Protection, Installation and Operation Guide, which can be found online at: http://www.xantrex.com/web/id/606/docserve.asp

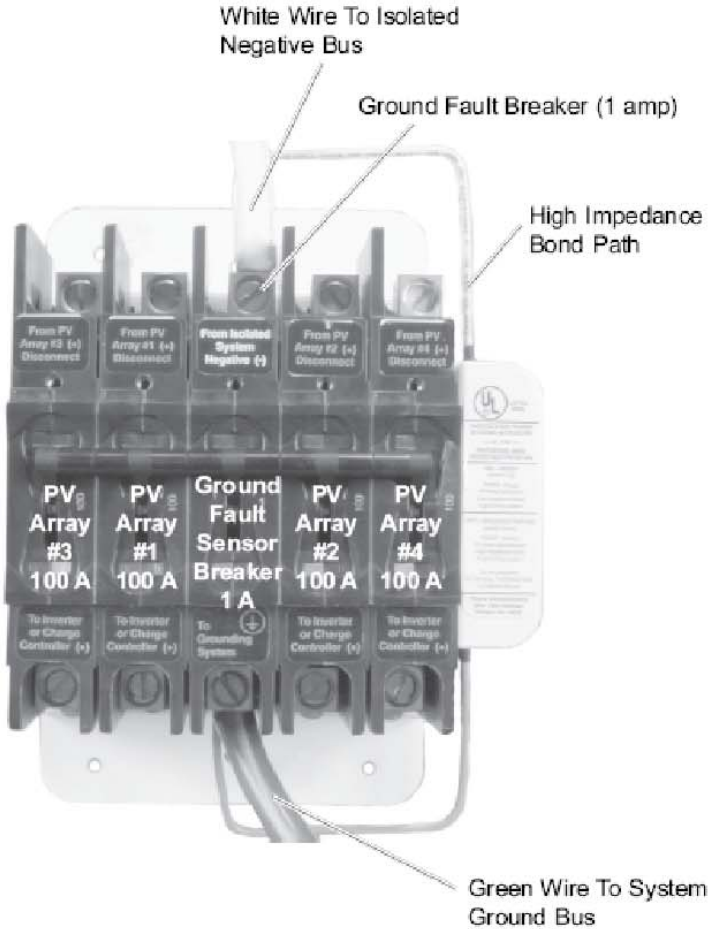

Figure 2
PVGFP Front View

NOTE: Before installing the PVGFP, read all instructions and cautionary markings located in this manual.

NOTE: The PVGFP must be mounted in a vertical position for proper operation.

INTERSTATE BATTERIES

CLICK HERE TO BUY A BATTERY

LINKS

PRODUCT INFO

- Features & Specs
- Safety Data Sheets
- Battery Ratings
- Buying Tips
- Pro-rata Warranty
- Recycling
- FAQ's

Custom Batteries

DEALER LOCATOR

Home > Product Info > Features & Specs > Floor Machine (sweeper, scrubber)

Be sure to visit Battery Terms in the FAQ section for definitions of terms like CCA and Reserve Capacity.

Battery Type	Volts	Ah Capacity (@ 20 HR)	Reserve Capacity		Dimensions (inches)			Weight (lbs.)		Terminal	# of plates
			25A	75A	length	Width	Height	wet	dry		
U2500	6	250	540	150	11.62	7.12	11.63	72	59	nut & bolt, auto w/ hole	63
U2500HC	6	275	600	168	11.62	7.12	11.63	78	61	nut & bolt auto w/ hole	69
U3050	6	305	675	175	11.88	7.12	15.00	87	71	nut & bolt, auto w/ hole	57
U3050HC	6	335	747	203	11.88	7.12	15.00	96	78	nut & bolt auto w/ hole	63
UL16	6	375	810	214	11.88	7.12	17.00	111	89	nut & bolt, auto w/ hole	51
UL16HC	6	415	890	236	11.88	7.12	17.00	117	95	nut & bolt auto w/ hole	57
U1450	12	145	270	72	13.62	6.75	12.25	87	71	auto, nut & bolt	78
U1850	12	195	375	100	15.50	7.06	14.25	111	90	nut & bolt, auto w/ hole	66
U1850HC	12	215	418	110	15.50	7.06	14.25	116	96	nut & bolt, auto w/ hole	78

HOME CONTACT US DISTRIBUTORS

MATERIAL SAFETY DATA SHEET

EFFECTIVE MAY 21st, 2001

U.S. BATTERY MFG. CO.
1675 SAMPSON AVE
CORONA, CA. 91719-1889

U.S. BATTERY MFG. CO.
1895 TOBACCO RD.
AUGUSTA, GA. 30906

U.S. BATTERY MFG. CO.
653 INDUSTRIAL PARK DR.
EVANS, GA. 30809

TRANSPORTATION EMERGENCY NO:
INFOTRAC: (800) 535-5053 / INT'L (352) 323-3500

GENERAL INFORMATION NO:
SAFETY DEPT. (909) 371-8090

SECTION I

PRODUCT NAME: BATTERY, WET, FILLED WITH ACID
CHEMICAL NAME: LEAD / ACID STORAGE BATTERY
CHEMICAL FAMILY: TOXIC AND CORROSIVE MATERIAL
FORMULA: LEAD / ACID

SECTION II

MATERIALS	CAS NUMBER	PERCENT	TLV (units)
LEAD / LEAD OXIDE	7439-92-1	60	0.05
ANTIMONY ALLOY	7440-36-0	1-5	0.5
ARSENIC	7440-38-2	LESS THAN 1%	LESS THAN 1%
SULFURIC ACID	7664-93-9	10-30	10-30

SECTION III

PHYSICAL / CHEMICAL CHARACTERISTICS

BOILING POINT: APPOX. 203°F
VAPOR PRESSURE (mm Hg): 10@18°F
VAPOR DENSITY (air = 1): LESS THAN 1
SOLUBILITY IN WATER: 100%
PERCENT, VOLATILE BY VOLUME(%): 10-30%
EVAPORATION RATE: -1
APPEARANCE AND ODOR: CLEAR LIQUID, PUNGENT ODOR (SHARP PENETRATING ODOR)

SECTION IV

FIRE AND EXPLOSION HAZARD DATA

FLASH POINT: N/A
FLAMMABLE LIMITS: Lel 4.0 Uel 74.2
EXTINGUISHING MEDIA: HALON OR DRY CHEMICAL EXTINGUISHER
UNUSUAL FIRE AND EXPLOSION HAZARDS:
HYDROGEN GAS AND SULFURIC ACID VAPORS ARE GENERATED UPON OVERCHARGE. VENTILATE CHARGING AREAS.

SECTION V

HEALTH HAZARD DATA

THRESHOLD LIMIT VALUE: SEE SECTION II
EFFECTS OF OVEREXPOSURE:
EYES: SERVE BURNS, CORNEA DAMAGE AND BLINDNESS.
SKIN: SERVE IRRITATION, BURNING AND ULCERATION.
INHALATION: BREATHING OF VAPORS OR MIST MAY CAUSE RESPIRATORY DAMAGE.
INGESTION: BURNS TO MOUTH,THROAT AND INTESTINAL TRACT.

SECTION V (continued)

EMERGENCY AND FIRST AID PROCEDURES:

EYES: WASH WITH COPIOUS QUANTITIES OF RUNNING WATER FOR 15 MINUTES.

SEEK MEDICAL ATTENTION FOR ALL EXPOSURE EMERGENCIES

SKIN: FLUSH AREAS WITH RUNNING WATER FOR 15 MINUTES.

INGESTION: GIVE MILK OR DRINK. DO NOT INDUCE VOMITING.

SECTION VI

REACTIVITY DATA

STABILITY: U-3,F-0,S-2,R-~~W~~ UNSTABLE

CONDITIONS TO AVOID: AVOID OVERCHARGING AND SMOKING IN THE VICINITY OF CHARGING BATTERIES. AVOID SPARKS. POOR VENTILATION

INCOMPATIBILITY: WATER: MAY CAUSE ELECTRIC SHOCK AND REACTION.

HAZARDOUS POLYMERIZATION: WILL NOT OCCUR

SECTION VII

SPILL OR LEAK PROCEDURES

IF MATERIAL IS RELEASED OR SPILLED TAKE THE FOLLOWING ACTIONS:
CONTAIN SPILLED MATERIAL, WASH WITH WATER OR NEUTRALIZE WITH SODIUM CARBONATE OR BICARBONATE.

WASTE DISPOSAL METHOD: DISPOSE HAS GENERAL WASTE

SECTION VIII

SPECIAL PROTECTION INFORMATION

RESPIRATORY PROTECTION: SULFURIC ACID MIST / HALF MASK RESPIRATOR WITH ACID MIST FILTERS.

VENTILATION: LOCAL EXHAUST PREFERRED
MECHANICAL ACCEPTABLE AT 1 TO 4 CHANGES / PER / HOUR

PROTECTIVE GLOVES: LATEX / RUBBER GLOVES

EYE PROTECTION: GOGGLES OR FACE SHIELD

OTHER PROTECTIVE EQUIPMENT: RUBBER OR PLASTIC APRON

SECTION IX

SPECIAL PRECAUTIONS

WHEN HANDLING AND STORING, KEEP AWAY FROM FLAMES DURING AND IMMEDIATELY AFTER CHARGING.

AVOID PROLONGED OVERCHARGING.

TRANSPORTATION INFORMATION

DOT SHIPPING NAME: BATTERIES, WET FILLED WITH ACID, ELECTRIC STORAGE

IDENTIFICATION NUMBER: UN 2794

HAZARD CLASS: 8

SHIPPING LABELS: CORROSIVE

PLACARD (when required) CORROSIVE

PROPOSITION 65

WARNING:

LEAD AND IT'S COMPOUNDS ARE CHEMICALS KNOW TO THE STATE OF CALIFORNIA TO CAUSE REPRODUCTIVE HARM TO BOTH MALES AND FEMALES AND TO CAUSE BIRTH DEFECTS.

(rev. 5-21-01) (wb2)

FX & VFX Series

Sealed & Vented True Sinewave Inverter/Charger

OutBack Power Systems

The OutBack true sinewave inverter/charger is a complete power solution. It incorporates a DC to AC sinewave inverter, battery charger and AC transfer switch housed within a die-cast aluminum chassis. Intelligent multistage battery charging runs your generator less, and prolongs the life of your batteries. Built-in networked communications enables multiple units to be stacked and connected with other OutBack power electronics providing industry leading integration and near infinite application flexibility. The exclusive modular system architecture means that increased power output is just an additional inverter/charger away. Our flagship *FX* series uses a sealed chassis that can operate in the harshest environmental conditions such as high humidity and corrosive salt air. The *VFX* series uses a vented chassis with "bug proof" screened openings that allow high output AC power in the hottest of operating conditions.

OutBack Power inverter/chargers are the only choice when you need a true sinewave, powerful, modular and reliable power solution for your home, business or extreme application.

Sealed FX

Sinewave Output
Intelligent Battery Charging
Modular Stackable Design
High Operating Efficiency
Weather-resistant Sealed Chassis
Corrosion Resistant Internal Components
Field Serviceable
Integrated Network Communications
Standard 2 Year Limited Warranty

Vented VFX

Sinewave Output
Intelligent Battery Charging
Modular System Architecture
High Operating Efficiency
"Bug Proof" Chassis
Corrosion Resistant Internal Components
Field Serviceable
Integrated Network Communications
Standard 2 Year Limited Warranty

Off-Grid Specifications

		Sealed Models			*Vented Models*		
		FX2012T	**FX2524T**	**FX3048T**	**VFX2812**	**VFX3524**	**VFX3648**
Nominal DC Input Voltage		12 VDC	24 VDC	48 VDC	12 VDC	24 VDC	48 VDC
Continuous Power Rating at 25° C		2000 VA	2500 VA	3000 VA	2800 VA	3500 VA	3600 VA
AC Voltage/Frequency		120 VAC 60 Hz	120 VAC 60 Hz	120 VAC 60 Hz	120 VAC 60 Hz	120 VAC 60 Hz	120 VAC 60 Hz
Continuous AC RMS Output at 25° C		17.0 amps AC	20.8 amps AC	25.0 amps AC	23.3 amps AC	29.2 amps AC	30.0 amps AC
Idle Power	Full	~ 20 Watts	~ 20 Watts	~ 23 Watts	~ 20 Watts	~ 20 Watts	~ 23 Watts
	Search	~ 6 Watts	~ 6 Watts	~ 6 Watts	~ 6 Watts	~ 6 Watts	~ 6 Watts
Typical Efficiency		90%	92%	93%	90%	92%	93%
Total Harmonic Distortion	Typical	2%	2%	2%	2%	2%	2%
	Maximum	5%	5%	5%	5%	5%	5%
Output Voltage Regulation		± 2%	± 2%	± 2%	± 2%	± 2%	± 2%
Maximum Output Current	Peak	56 amps AC	70 amps AC	70 amps AC	56 amps AC	70 amps AC	70 amps AC
	RMS	40 amps AC	50 amps AC	50 amps AC	40 amps AC	50 amps AC	50 amps AC
AC Overload Capability	Surge	4800 VA	6000 VA	6000 VA	4800 VA	6000 VA	6000 VA
	5 Second	4000 VA	4800 VA	4800 VA	4000 VA	5000 VA	5000 VA
	30 Minutes	2500 VA	3200 VA	3200 VA	3200 VA	4000 VA	4000 VA
AC Input Current Maximum		60 amps AC	60 amps AC	60 amps AC	60 amps AC	60 amps AC	60 amps AC
AC Input Voltage Range (MATE Adjustable)		80 to 150 VAC	80 to 150 VAC	80 to 150 VAC	80 to 150 VAC	80 to 150 VAC	80 to 150 VAC
AC Input Frequency Range		54 to 66 Hz	54 to 66 Hz	54 to 66 Hz	54 to 66 Hz	54 to 66 Hz	54 to 66 Hz
DC Input Voltage Range		10.5 to 17.5 VDC	21.0 to 34.0 VDC	42.0 to 68.0 VDC	10.5 to 17.0 VDC	21.0 to 34.0 VDC	42.0 to 68.0 VDC
Continuous Battery Charge Output		80 amps DC	55 amps DC	35 amps DC	125 amps DC	85 amps DC	45 amps DC
Minimum Recommended DC Breaker		OBDC-250	OBDC-175	OBDC-100	OBDC-250	OBDC-250	OBDC-175
Warranty		Standard 2 year / Optional 5 year			Standard 2 year / Optional 5 year		
Weight	Unit	62.6 lbs (28.4 kg)			61 lbs (27.7 kg)		
	Shipping	67 lbs (30 kg)			64 lbs (29 kg)		
Dimensions (H x W x L)	Unit	13 x 8.25 x 16.25" (33 x 21 x 41 cm)			12 x 8.25 x 16.25" (30 x 21 x 41 cm)		
	Shipping	21.75 x 13 x 22" (55 x 33 x 56 cm)			21.75 x 13 x 22" (55 x 33 x 56 cm)		

OutBack Power Systems

Main Office:
19009 62nd Avenue NE
Arlington, WA 98223 USA
Phone: (360) 435.6030
Fax: (360) 435.6019

European Office:
Urb. Garraf II Buzón 214
08860 Les Botígues de Sitges
Barcelona, ESPAÑA
Phone: (+34) 600.843.845

www.outbackpower.com

Available From:

Mid-Size Frame (5000 watts, 9 HP, 265cc Subaru)

FEATURES
SPECS
GALLERY
MANUALS

List Price (U.S.):
$1,329.00*

Where to BUY

ENLARGE photo

FEATURES

- Maximum output: 5,000 watts
- 9.0-horsepower, 265cc Subaru OHC/OHV gasoline engine with low oil shutdown
- Brushless 120V/240V alternator
- Fuel shutoff valve standard
- 5.7 gallon fuel capacity
- Optional lifting hook and wheel kit available
- 2-year warranty

Related links:

Generator Accessories

SPECS

MANUFACTURER	**John Deere**
MODEL/PART No.	**AC-G5000S**
Max. AC output	5,000 watts
Rated AC output	4,400 watts
Horsepower	9.0
Displacement	265cc

Engine	Subaru
Engine Type	OHC / OHV
Alternator type	Brushless
Frequency (hertz)	60
Voltage	120V / 240V
Max. amps (120V/240V)	41.7 / 20.8
Cont. amps (120V/240V)	36.7 / 18.3
Voltmeter	No
Receptacles	(2) 120V, 20A GFCI duplex 120v/240V, 20A twist lock 120V, 30A twist lock
Main circuit breaker	(2) 20A toggle circuit breaker, single pole (2) 20A toggle circuit breaker, double pole 30A toggle circuit breaker, single pole
Low-oil shutdown	Yes
Rated speed (rpm)	3,600
Starting system	Recoil
Decibel rating	73.8
Idle control	No
Fuel capacity	5.7 gal / 21.50 liter
Run time (at full load)	6.8 hours
Fuel gauge	Yes
Full power switch	Yes
Dry weight (lb/kg)	165 / 75
Spark arrestor	Yes
Wheel kit	Optional
Lifting hook	Optional
Hour meter	No
Battery charging	No
CSA listed	Yes
Fuel-shutoff valve	Yes
Warranty	2 year

FLEXware 1000

For applications with large power requirements such as large residential, commercial or village power systems. The FLEXware 1000 system architecture is capable of supporting up to four OutBack FX Series Inverter/Chargers, four MX60 Charge Controllers, and all the required AC and DC components and wiring. Utilizing a compact design, FLEXware 1000 AC and DC enclosures accommodate all of the essential protective devices with lots of room for additional breakers and large cable connections and can be mounted either vertically or horizontially.

Breaker Configuration Diagram

AC Side

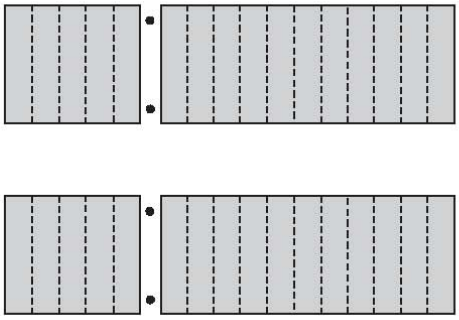

Holds up to thirty-two DIN mount AC breakers (not included). Support for optional AC Input-Output-Bypass Assembly. AC breakers are rated from 10-60 Amps of AC current.

DC Side

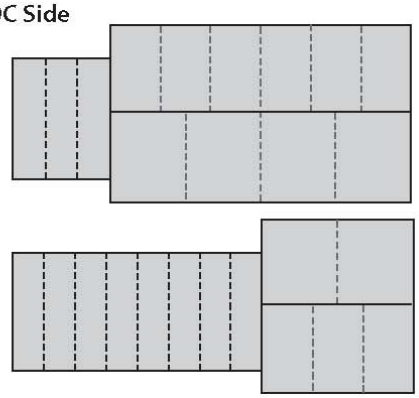

Holds up to eleven small 0.75" (19 mm) wide, nine medium 1" (26 mm) wide or six large 1.5" (32 mm) wide DC rated breakers. The small are rated for 1-80 Amps, the medium for 100 or 125 Amps and the large are rated for 175 or 250 Amps of DC current.

Knockout Location Diagram

Left
- (4) 2" knockout (2.468" diameter)
- (9) 1" knockout (1.359" diameter)
- (2) Duplex GFCI Outlet knockout

Back
- (2) 2" knockout (2.468" diameter)
- (2) 1" knockout (1.359" diameter)

Right
- (17) 1" knockout (1.359" diameter)

Top
- (3) 1" knockout (1.359" diameter)
- (1) ¾" knockout (1.093" diameter)
- (4) 2" knockout (2.468" diameter)

Bottom
- (3) 1" knockout (1.359" diameter)
- (1) ¾" knockout (1.093" diameter)
- (4) 2" knockout (2.468" diameter)

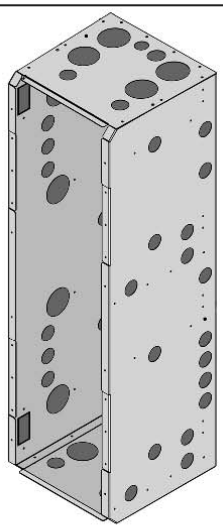

FLEXware 1000

Model: FW1000-DC

Description: DC enclosure which mounts at the DC side of three or four FX Inverter/Chargers. Supports eight terminal bus bars (not including GBB) and three shunt assemblies.

Includes: Ground bus bar, 1000 Amp DC shunt assembly, breaker mounting hardware, enclosure mounting hardware, two FW-SBUS and one FLEXware 1000 breaker bus

Unit Dimensions (H x W x D)	Shipping Dimensions (H x W x L)	Shipping Weight	Enclosure Type
38.5 x 11.4 x 12.1" (97.8 x 29.0 x 30.7 cm)	14.5 x 13.6 x 40.6" (36.8 x 34.5 x 103.1 cm)	21 lbs. (9.5 kg)	Type-1 indoor (IP30)

Model: FW1000-AC

Description: AC enclosure which mounts at the AC side of three or four FX Inverter/Chargers. Supports eight terminal bus bars and one FW-X240.

Includes: Ground bus bar, two DIN mounting brackets and FLEXware 1000 wiring raceway

Unit Dimensions (H x W x D)	Shipping Dimensions (H x W x L)	Shipping Weight	Enclosure Type
38.5 x 11.4 x 12.1" (97.8 x 29.0 x 30.7 cm)	14.5 x 13.6 x 40.6" (36.8 x 34.5 x 103.1 cm)	21 lbs. (9.5 kg)	Type-1 indoor (IP30)

*The FW1000 system utilizes two FW-MP mounting plate and a set of the DCA and ACA conduit adapters for each inverter/charger.
*DC and AC breakers, Input-Output-Bypass Assemblies and all other additional components sold separately.

FLEXware 1000 AC Input-Output-Bypass Assemblies

Field installable kit for bypassing the AC input to the AC output for inverter maintainence or installation. Also provides over-current protection.

Model: FW-IOB-T-120/208VAC

Includes: Nine 60A 120VAC single pole DIN mount breakers, sliding bypass interlock plate, wire and hardware kit

System Rating	Bypass Breaker	Input Breaker	Output Breaker
Three Phase 120/208 VAC 60 Amps 21.6 kW	Three Poles @ 60 Amps 21.6 kW	Three Poles @ 60 Amps 21.6 kW	Three Poles @ 60 Amps 21.6 kW

Model: FW-IOB-T-230/400VAC

Includes: Nine 30A 230VAC single pole DIN mount breakers, sliding bypass interlock plate, wire and hardware kit

System Rating	Bypass Breaker	Input Breaker	Output Breaker
Three Phase 230/400 VAC 30 Amps 20.7 kW	Three Poles @ 30 Amps 20.7 kW	Three Poles @ 30 Amps 20.7 kW	Three Poles @ 30 Amps 20.7 kW

Model: FW-IOB-Q-120/240VAC

Includes: Twelve 60A 120VAC single pole DIN mount breakers, sliding bypass interlock plate, wire and hardware kit

System Rating	Bypass Breaker	Input Breaker	Output Breaker
Split Phase 120/240 VAC 120 Amps 28.8 kW	Four Poles @ 60 Amps 28.8 kW	Four Poles @ 60 Amps 28.8 kW	Four Poles @ 60 Amps 28.8 kW

Model: FW-IOB-Q-120VAC

Includes: Twelve 60A 120VAC single pole DIN mount breakers, sliding bypass interlock plate, wire and hardware kit

System Rating	Bypass Breaker	Input Breaker	Output Breaker
Single Phase 120 VAC 240 Amps 28.8 kW	Four Poles @ 60 Amps 28.8 kW	Four Poles @ 60 Amps 28.8 kW	Four Poles @ 60 Amps 28.8 kW

Model: FW-IOB-Q-230VAC

Includes: Twelve 30A 230VAC single pole DIN mount breakers, sliding bypass interlock plate, wire and hardware kit

System Rating	Bypass Breaker	Input Breaker	Output Breaker
Single Phase 230 VAC 120 Amps 27.6 kW	Four Poles @ 30 Amps 27.6 kW	Four Poles @ 30 Amps 27.6 kW	Four Poles @ 30 Amps 27.6 kW

PSPV

OutBack DC DIN Mount Breakers

DIN rail mount breakers are hydraulic-magnetic type and are not affected by high ambient temperatures.

Model	Current Rating	Voltage Rating*	Terminals	Width
OBB-1-125VDC-DIN	1 Amp	125VDC	#14 to 2 AWG clamp terminals	0.5" (13 mm)
OBB-2-125VDC-DIN	2 Amp	125VDC	#14 to 2 AWG clamp terminals	0.5" (13 mm)
OBB-3-125VDC-DIN	3 Amp	125VDC	#14 to 2 AWG clamp terminals	0.5" (13 mm)
OBB-4-125VDC-DIN	4 Amp	125VDC	#14 to 2 AWG clamp terminals	0.5" (13 mm)
OBB-5-125VDC-DIN	5 Amp	125VDC	#14 to 2 AWG clamp terminals	0.5" (13 mm)
OBB-6-125VDC-DIN	6 Amp	125VDC	#14 to 2 AWG clamp terminals	0.5" (13 mm)
OBB-8-125VDC-DIN	8 Amp	125VDC	#14 to 2 AWG clamp terminals	0.5" (13 mm)
OBB-9-125VDC-DIN	9 Amp	125VDC	#14 to 2 AWG clamp terminals	0.5" (13 mm)
OBB-10-125VDC-DIN	10 Amp	125VDC	#14 to 2 AWG clamp terminals	0.5" (13 mm)
OBB-15-125VDC-DIN	15 Amp	125VDC	#14 to 2 AWG clamp terminals	0.5" (13 mm)
OBB-20-125VDC-DIN	20 Amp	125VDC	#14 to 2 AWG clamp terminals	0.5" (13 mm)
OBB-30-125VDC-DIN	30 Amp	125VDC	#14 to 2 AWG clamp terminals	0.5" (13 mm)
OBB-50-125VDC-DIN	50 Amp	125VDC	#14 to 2 AWG clamp terminals	0.5" (13 mm)
OBB-60-125VDC-DIN	60 Amp	125VDC	#14 to 2 AWG clamp terminals	0.5" (13 mm)

* Approved for maximum VOC of 150VDC by ETL for PV array applications only.

OutBack High Voltage DIN Mount Fuse Holders and Fuses

Fuse holders are DIN rail mount with #8 AWG set-screw type compression terminals. Touch-safe design and not rated for load make or load break usage. Maximum of eight fuseholders in one PSPV enclosure.

Model	Description	Current Rating	Voltage Rating	Width
OBF-6-600VDC	Fuse	6 Amp	600VDC	N/A
OBF-10-600VDC	Fuse	10 Amp	600VDC	N/A
OBF-15-600VDC	Fuse	15 Amp	600VDC	N/A
OBFH-30-600VDC-DIN	Fuse Holder	30 Amp	600VDC	0.7" (18 mm)

Terminal Bus Bars

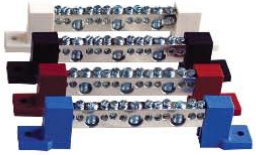

Used for adding more wire terminations or for isolating multiple positive/negative circuits. All TBB models have three #1/0 to 14 AWG and eight #6 to 14 AWG screw type compression terminals, which means no ring lugs are required. Available with black, white, red, blue and brown insulators. All required TBBs are included with the AC Input-Output-Bypass Assemblies.

Model	Description	Terminals
TBB-GROUND	Ground/Neutral terminal bus bar with mounting screws (no insulators)	Three #1/0 to 14 AWG and Eight #6 to 14 AWG screw type compression
TBB-BLACK	Bus bar with black insulators with mounting screws - use as L1 hot or DC negative	Three #1/0 to 14 AWG and Eight #6 to 14 AWG screw type compression terminals
TBB-BLUE	Bus bar with blue insulators with mounting screws - use as Phase C on three phase systems	Three #1/0 to 14 AWG and Eight #6 to 14 AWG screw type compression terminals
TBB-RED	Bus bar with red insulators with mounting screws - use as L2 hot or DC positive	Three #1/0 to 14 AWG and Eight #6 to 14 AWG screw type compression terminals
TBB-WHITE	Bus bar with white insulators with mounting screws - use as AC neutral or DC negative	Three #1/0 to 14 AWG and Eight #6 to 14 AWG screw type compression terminals
TBB-BROWN	Bus bar with brown insulators with mounting screws - use as AC hot in European systems	Three #1/0 to 14 AWG and Eight #6 to 14 AWG screw type compression terminals

Components

OutBack DIN Mount Breakers

DIN rail mountable, hydraulic-magnetic type breakers that can be used for input, output or load circuits.

Model	Current Rating	Voltage Rating	Branch Circuit	Variation	Width
OBB-15-120VAC-DIN	15 Amp	120VAC 50/60Hz	10k AIC	Single pole	0.50" (13 mm
OBB-15D-240VAC-DIN	15 Amp	120/240VAC 50/60Hz	10k AIC	Dual pole	1.0" (26 mm)
OBB-20-120VAC-DIN	20 Amp	120VAC 50/60Hz	10k AIC	Single pole	0.50" (13 mm)
OBB-20D-240VAC-DIN	20 Amp	120/240VAC 50/60Hz	10k AIC	Dual pole	1.0" (26 mm)
OBB-25D-240VAC-DIN	25 Amp	120/240VAC 50/60Hz	10k AIC	Dual pole	1.0" (26 mm)
OBB-10-277VAC-DIN	10 Amp	277VAC 50/60Hz	N/A	Single pole	0.5" (13 mm)
OBB-15-277VAC-DIN	15 Amp	277VAC 50/60HZ	N/A	Single pole	0.5" (13 mm)
OBB-30-277VAC-DIN	30 Amp	277VAC 50/60Hz	N/A	Single pole	0.5" (13 mm)
OBB-30D-480VAC-DIN	30 Amp	277/480VAC 50/60Hz	N/A	Dual pole	1.0" (26 mm)
OBB-30T-480VAC-DIN	30 Amp	277/480VAC 50/60Hz	N/A	Three pole	1.5" (39 mm)
OBB-50-277VAC-DIN	50 Amp	277VAC 50/60Hz	N/A	Single pole	0.5" (13 mm)
OBB-50D-480VAC-DIN	50 Amp	277/480VAC 50/60Hz	N/A	Dual pole	1.0" (26 mm)
OBB-50T-480VAC-DIN	50 Amp	277/480VAC 50/60Hz	N/A	Three pole	1.5" (39 mm)
OBB-60-277VAC-DIN	60 Amp	277VAC 50/60Hz	N/A	Single pole	0.5" (13 mm)

* #14 to 2 AWG clamp terminals

OutBack Panel Mount Breakers

Panel mounted hydraulic-magnetic type breakers that can be used for DC sources, inverters or load circuits.

Model	Current Rating	Voltage Rating	Branch Circuit	Terminals	Width
OBB-1-125VDC120VAC-PNL	1 Amp	125VDC 120VAC	10k AIC	1/4" stud	0.75" (19 mm)
OBB-5-125VDC120VAC-PNL	5 Amp	125VDC 120VAC	10k AIC	1/4" stud	0.75" (19 mm)
OBB-10-125VDC120VAC-PNL	10 Amp	125VDC 120VAC	10k AIC	1/4" stud	0.75" (19 mm)
OBB-15-125VDC120VAC-PNL	15 Amp	125VDC 120VAC	10k AIC	1/4" stud	0.75" (19 mm)
OBB-20-125VDC120VAC-PNL	20 Amp	125VDC 120VAC	10k AIC	1/4" stud	0.75" (19 mm)
OBB-30-125VDC120VAC-PNL	30 Amp	125VDC 120VAC	10k AIC	1/4" stud	0.75" (19 mm)
OBB-40-125VDC120VAC-PNL	40 Amp	125VDC 120VAC	10k AIC	1/4" stud	0.75" (19 mm)
OBB-50-125VDC120VAC-PNL	50 Amp	125VDC 120VAC	10k AIC	1/4" stud	0.75" (19 mm)
OBB-60-125VDC120VAC-PNL	60 Amp	125VDC 120VAC	10k AIC	1/4" stud	0.75" (19 mm)
OBB-80-125VDC-PNL	80 Amp	125VDC	N/A	1/4" stud	0.75" (19 mm)
OBB-100-125VDC-PNL	100 Amp	125VDC	N/A	5/16" stud	1.0" (26 mm)
OBB-125-125VDC-PNL	125 Amp	125VDC	N/A	5/16" stud	1.0" (26 mm)
OBB-175-125VDC-PNL	175 Amp	125VDC	N/A	3/8" stud	1.5" (39 mm)
OBB-250-125VDC-PNL	250 Amp	125VDC	N/A	3/8" stud	1.5" (39 mm)

* ETL Listed for 150 VDC max open circuit. For PSPV applications only.

Table 1: Selection Data

Rating	Catalog Number						Terminal Lug Wire Size (AWG)
	One-Pole		Two-Pole			Three-Pole	
	120/240 Vac		120/240 Vac	240 Vac	120/240 Vac	240 Vac	
	10K AIR	22K AIR	10 K AIR		22K AIR	10K AIR	
10 A	QOU110	—	QOU210	—		QOU310	
15 A	QOU115*	QOU115VH	QOU215*	QOU215H*	QOU215VH	QOU315*	
15 A	QOU115HM*†	—	—	—		—	
20A	QOU120*	QOU120VH	QOU220*	QOU220H*	QOU220VH	QOU320*	
20 A	QOU120HM*†	—	—	—		—	
25 A	QOU125*	QOU125VH	QOU225*	QOU225H*	QOU225VH	QOU325*	1—#14–#2
30 A	QOU130*	QOU130VH	QOU230*	QOU230H*	QOU230VH	QOU330*	Cu or Al
35 A	QOU135*	QOU135VH	QOU235*	—	QOU235VH	QOU335*	
40 A	QOU140*	QOU140VH	QOU240*	—	QOU240VH	QOU340*	
45 A	QOU145*	QOU145VH	QOU245*	—	QOU245VH	QOU345*	
50 A	QOU150*	QOU150VH	QOU250*	—	QOU250VH	QOU350*	
60 A	QOU160*	QOU160VH	QOU260*	—	QOU260VH	QOU360*	
70 A	QOU170*	—	QOU270*	—	—	QOU370‡	
80 A	QOU180‡	—	QOU280‡	—	—	QOU380‡	1—#12–#2/0
90 A	QOU190‡	—	QOU290‡	—	—	QOU390‡	Cu or Al
100 A	QOU1100‡	—	QOU2100‡	—	—	QOU3100‡	
125 A	—	—	QOU2125‡	—	—	—	
Switch—60 Amperes Max.—240 Vac				QOU200		QOU300	1—#14–#2
Switch—100 Amperes Max.—240 Vac				QOU2000‡		QOU3000‡	1—#12–#2/0
Switch—125 Amperes Max.—240 Vac				QOU20001‡		QOU30001‡	

* UL Listed as HACR type for use with heating, air conditioning and refrigeration equipment containing motor-group combinations and marked for use with HACR type circuit breakers.

† High-magnetic trip circuit breakers. Recommended for applications where high initial inrush current can occur and for individual dimmer applications.

‡ Available as Series 1 with forward box lugs only. (No optional terminations)

Tripping Mechanisms

A tripping mechanism is an assembly within the circuit breaker molded case that causes the circuit breaker to open automatically under sustained overload or short circuit conditions.

The tripping mechanisms in two- and three-pole circuit breakers operate such that an overcurrent on any pole of the circuit breaker will cause all poles of the circuit breaker to open simultaneously. Thermal and magnetic factory calibration (with current) is performed on each pole of every Square D circuit breaker.

These mechanisms operate to trip the circuit breaker:

- Thermal trip
- Magnetic trip
- Optional shunt trip accessory (see Accessories, page 12)

The sensing system is an integral part of a thermal-magnetic circuit breaker. The sensing system continually monitors current flowing through the circuit breaker. It detects abnormal current conditions and, depending on the magnitude of the current, initiates an inverse-time or an instantaneous tripping response. This action causes the tripping mechanism to open the circuit breaker contacts and interrupt current flow. The speed of the tripping process must be controllable and inversely matched to the severity of the overcurrent. QOU miniature circuit breakers have an over-center toggle mechanism for quick-make, quick-break action with positive handle indication. The handle assumes a position between ON (I) and OFF (O) when the circuit breaker has tripped.

26 30 00 FACILITY ELECTRICAL POWER GENERATING AND STORING EQUIPMENT

26 33 00 BATTERY EQUIPMENT

26 33 17 Battery Compartment Spill Control and Neutralization

The Spill Control Barrier System from Acran, Inc. will be used for spill control and neutralization in the battery compartment. Specifications of the system and its MSDS are given on pages 265–275.

UNIV. OF ILLINOIS # P0140081

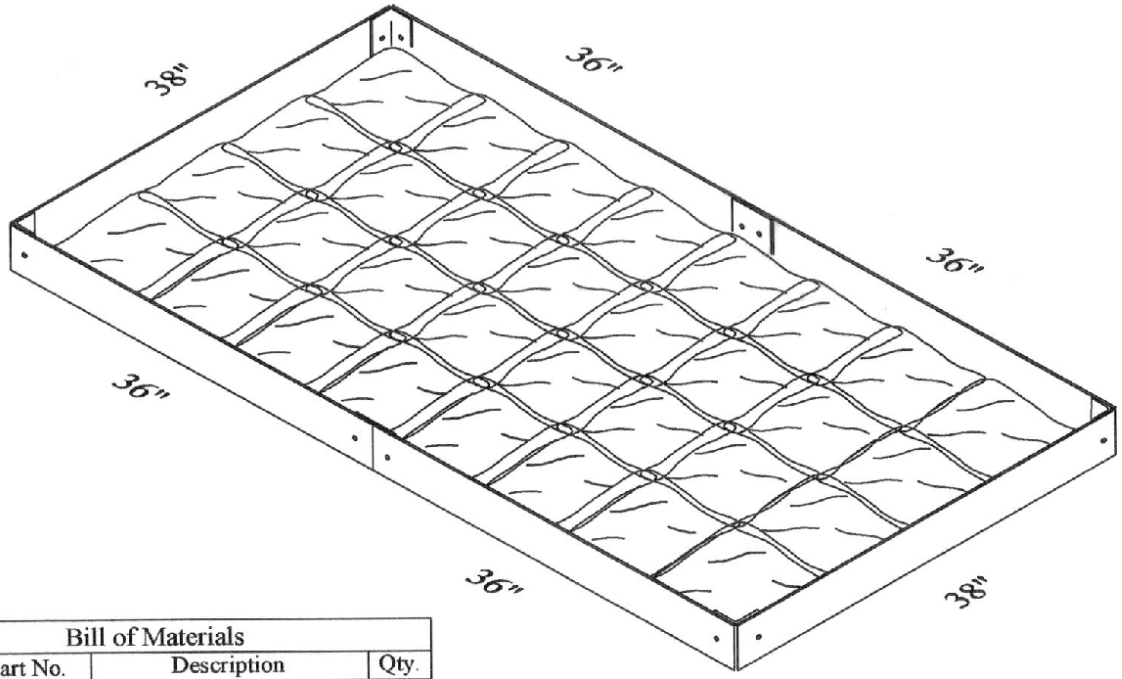

Bill of Materials			
Item #	Part No.	Description	Qty.
1	FBR00536	Barrier,Strip,36"	4
2	FBR00538	Barrier,Strip,38"	2
3	FBS10057	Barrier Splice Kits	2
4	KBR00001	Barrier Hardware Kit	12
5	FBC10056	Corner Kit	4
6	5EAK0002	Adhesive	2
7	5ECT0100	Floor Coating	2
8	5NMB0010	Neutra-Mats	4
9	1X028400	Instruction Manual	1

NOT FOR CONSTRUCTION

Notes:

1. Novolac Epoxy AcidSafe Floor Coating: 12.8 sf/gal @ 125 mils thick

ACRAN, Inc.
105-D SNYDER ROAD
SOUTH PLAINFIELD, NJ 07080
PHONE: (877) 227-2615
EMAIL: DWATSON@ACRAN.COM
WEB SITE: WWW.ACRAN.COM

ACRAN

Spill Control Barrier System

Neutralizing and Absorbent Capacity: 32 Quarts

Drawn By: DW 04/22/2007	Size: A	System Outside Dimensions: 38" x 72"	Part/Drawing No.: 7SC38072-L	REV:
Approved By: DW 04/22/2007	Scale: None	Date: 7/3/2007	Sheet: 1 of 1	

MATERIAL SAFETY DATA SHEET

ACRAN

Neutra-Tube
P/N 55RK0001
(FCM00702)

Neutra-Mat
P/N 5NMB0010
(FCM00703)

Section I — General Information

Manufacturer:
Acran Spill Containment, Inc.
105-D Snyder Road
South Plainfield, NJ 07080 *(Acran)*
Date Prepared: *1 January 2004*
Telephone Number for Information: *(908) 769-6915*

Section II — Hazardous Ingredients and Identity Information

Neutralizer/Absorber Blend CAS #: *Trade Secret* Weight *>99%*
Nuisance Dust
OSHA PEL: *15mg/M^3 Total dust, 5 mg/M^3 Respirable dust*
ACGIH TLV: *10mg/M^3 Total dust*
Color Change Agent CAS #: *Trade Secret* Weight *<1%*
Skin, Eye, and Respiratory Irritant

Section III — Physical Data

Boling Point: *N/A*
Melting Point: *N/A*
Volatiles: *0%vol. 0%wt.*
Specific Gravity: *2.5*
Solubility: *3.5% wt in water.*
Vapor Density: *N/A*
Liquid Density: *N/A*
Evaporation Rate: *N/A*
Appearance & Odor: *Pillow containing a light tan powder. Odorless.*

Section IV — Fire and Explosion Hazard Data

Flash Point: *Non-flammable* LEL: *None* UEL: *None*
Extinguishing Media: *Water, Carbon Dioxide, or Appropriate Foam*
Special Firefighting Procedures: *If large quantities of product are involved, significant levels of CO_2 may be generated making necessary the use of a self contained breathing apparatus (CO_2 is an asphyxiant at levels over 5%).*
Unusual Fire and Explosion Hazards: *None*

Section V — First Aid and Health Hazard Data

Acute and Chronic Effects of Overexposure:
Eye Contact: *Dusts may irritate the eyes. In case of eye contact, wash eyes with copious amounts of water for 15 minutes.*
Skin Contact: *Prolonged exposure may cause irritation. Irritant dose is 30 mg/3 days – mild irritation to human skin. In case of skin contact, immediately wash skin with soap and water.*
Inhalation: *Nuisance dust can aggravate chronic bronchial difficulties. Breathing dust may irritate the nose and throat and cause coughing or chest discomfort. If inhaled, remove to fresh air. Give artificial respiration if not breathing. If breathing is difficult, give oxygen.*

Ingestion: *Excessive oral doses (5g/kg) may produce gastrointestinal disturbance, alkalosis, and expansion in extracellular fluid. Oral toxicity is 4.22 g/kg Rat LD50. If swallowed and conscious, wash mouth with water and induce vomiting. Do not put anything in mouth of unconscious person. Seek immediate medical attention.*

ACRAN

Neutra-Tube
P/N 55RK0001
(FCM00702)

Neutra-Mat
P/N 5NMB0010
(FCM00703)

Section VI — Reactivity Data

Stability: *Stable* Hazardous Polymerization: *Will not occur*

Conditions to avoid: *Excessive heat, HF acid, magnesium with hydrogen, strong oxidizing agent.*

Hazardous Decomposition Products: *Combustion byproducts may be CO, NOx, SOx. Heating may release dangerous levels of CO_2 gas.*

Section VII — Spill or Leak Procedures

Steps To Be Taken In Case Material Is Released Or Spilled: *Sweep or scoop up into clean container. If bags are torn or damaged, avoid breathing dust.*

Waste Disposal Method: *If unused, not classified as hazardous for landfill disposal (40 CFR Part 261). After absorption of hazardous or toxic liquid, dispose of in accordance with applicable federal, state and local regulations.*

Section VIII — Special Protection Information

Respiratory Protection: *Dust mask should be used if dust levels exceed PEL.*

Ventilation: *No dust should be produced in normal usage. If dust is created during handling, keep dust levels below 10 mg/M^3*

Local Exhaust: *See above* Special: *N/A*

Mechanical (General): *See above* Other: *N/A*

Skin Protection: *Gloves and labcoat, apron or coveralls*

Eye Protection: *Use goggles or safety glasses to avoid irritation.*

Work/hygienic practices: *Establish good personal hygiene and work practices. Always wash hands and face before eating, drinking or smoking.*

Section IX — Special Precautions

Precautions To Be Taken In Handling, Transportation, And Storage: *Store in a dry place to protect product from loss of performance. Handle with care not to puncture bags.*

Other Precautions: *None*

Section X — Additional Regulatory Information

Product not regulated by the DOT

MATERIAL SAFETY DATA SHEET

1. MATERIAL IDENTIFICATION

Product Name: **ACRAN ADHESIVE GEL- PART A**
Chemical Family: Epoxy Resin Mixture
Company Name: Eastern Resins Corp.
1174 River Street
Woonsocket, RI 02895, USA

BUSINESS PHONE: (401) 769-6700
EMERGENCY PHONE: (800) 255-3924

2. COMPOSITION

Chemical Name	Wt %	Exposure Limits ACGIH TLV-TWA	Exposure Limits OSHA PEL
Epoxy resin Mixture	>70	N/E	N/E
Titanium Dioxide*	<10	10 mg/m3	15 mg/m3
Carbon black*	<1	3.5 mg/m3	3.5 mg/m3
Fumed silica*	<10	20 mppcf	20mppcf

Abbreviations: N/E - NOT ESTABLISHED
*** - Materials are in *Non-Airborne* form**

3. HEALTH HAZARDS

Primary Routes of Exposure: Eyes: Yes Skin: Yes Inhalation: Yes
Eye Contact: May cause irritation and swelling.
Skin Contact: May cause irritation and sensitization. Symptoms can be immediate or delayed several hours.
Inhalation: May cause irritation and temporary or permanent sensitization.
Ingestion: May cause irritation.
Other: Preexisting skin sensitization may be aggravated by exposure to this product.

4. FIRST AID MEASURES

Eyes: Flush eyes thoroughly with water for at least 15 minutes while holding eyelids open. Seek medical attention.
Skin: Remove contaminated clothing. Wipe excess from skin and wash the affected area thoroughly with soap and water. Wash contaminated clothing thoroughly before reuse.
Inhalation: Remove to fresh air, and provide oxygen or artificial respiration if needed. Obtain medical attention; symptoms can be delayed up to several hours.
Ingestion: DO NOT induce vomiting. Give 1-2 cups of water or milk unless the person is drowsy, convulsing, or unconscious. Get medical attention.

5. FIRE FIGHTING MEASURES

Flammable Properties: Flash Point: >300°F (PMCC)
Explosive Limits: Not applicable **Auto-Ignition Temperature:** Not applicable
Hazardous Decomposition Products: Carbon monoxide, carbon dioxide, aldehydes, and other organic substances.

EXTINGUISHING MEDIA AND FIRE FIGHTING INSTRUCTIONS: When sufficiently large quantities are present, firefighters should be equipped with full bunker gear, including a positive pressure, NIOSH approved, self-contained breathing apparatus. Extreme heat or water contamination may cause closed containers to explode.
Extinguishing Media: Use carbon dioxide, dry chemical or appropriate foam

6. ACCIDENTAL RELEASE MEASURES

Ventilate the spill area and evacuate if necessary. Remove all ignition sources. Dike and contain large spills. Clean-up personnel should use adequate protective equipment.

7. HANDLING AND STORAGE

Store in a cool; dry place, in closed containers at room temperature. Avoid contact with incompatible materials. Wear protective eyewear, chemical-resistant gloves, and other protective clothing as appropriate.

8. EXPOSURE CONTROL AND PERSONAL PROTECTION

Engineering/Ventilation Controls: Effective engineering controls should be used whenever possible to eliminate and/or reduce worker exposure to all respiratory hazards. General ventilation, local ventilation, or isolation may prove adequate to keep airborne concentrations below exposure limits.
Respiratory Protection: Not required under normal conditions in a well-ventilated workplace.
Skin Protection: Impervious gloves and protective clothing should be worn as necessary.
Eye Protection: Chemical splash goggles or safety glasses with side shields should be worn as appropriate.

9. STABILITY AND REACTIVITY

Chemical Stability: Stable under normal conditions and use.
Conditions and Materials to Avoid: Reacts with amines and strong oxidizing agents.
Hazardous Polymerization: Will not occur.

10. PHYSICAL AND CHEMICAL PROPERTIES

Appearance/Odor:	Gray Paste, slight ether odor	**Boiling Point:**	Not determined
Vapor Pressure (mm Hg):	<1 @25°C	**Vapor Density (air=1):**	>1
Specific Gravity:	1.2-1.3	**Solubility in Water:**	None

11. TOXICOLOGICAL INFORMATION

This section provides toxicological information with regard to the pure form of the component indicated. It is suggested that persons trained in its evaluation interpret this information.

Epoxy Resins:	**Acute Oral LD_{50} (Rat):**	**11.4 g/kg**
	Acute Dermal LD_{50} (Rabbit):	**>20 g/kg**

12. DISPOSAL CONSIDERATIONS

Keep out of surface waters, sewers, and waterways entering or leading to surface waters. Notify authorities if any exposure to the environment occurs or is likely to occur. Utilize an appropriate disposal facility, in compliance with applicable federal, state, and local environmental control regulations.

13. TRANSPORTATION INFORMATION

DOT/IATA Proper Shipping Name: Not Regulated

14. REGULATORY INFORMATION

TSCA: The chemical components of this product are included in the TSCA Chemical Substance Inventory, as required.
SARA TITLE III:
Section 313 – Toxic Chemicals: None
Section 311/312 – Hazard Categories:

Fire Hazard:	No	**Reactivity Hazard:**	No
Sudden Release of Pressure Hazard:	No	**Immediate (Acute) Health Hazard:**	Yes
Delayed (Chronic) Health Hazard:	No		

OSHA Hazard Communication Standard Hazard Classes:

NFPA Hazards: Health: 2	Flammability: 1	Reactivity: 0
HMIS Hazards: Health: 2	Flammability: 1	Reactivity: 0

MATERIAL SAFETY DATA SHEET

1. MATERIAL IDENTIFICATION

Product Name: **ACRAN ADHESIVE GEL (HARDENER), PART-B**
Chemical Family: AMINE MIXTURE
Company Name: Eastern Resins Corp.
1174 River Street
Woonsocket, RI 02895, USA
BUSINESS PHONE: (401) 769-6700
EMERGENCY PHONE: (800) 255-3924

2. COMPOSITION

Chemical Name	Wt %	Exposure Limits ACGIH TLV-TWA	OSHA PEL
Modified Cycloaliphatic Amine	>50	N/E	N/E
Tertiary Amine	<10	N/E	N/E
Nonyl Phenol	>10	N/E	N/E

Abbreviations: N/E - NOT ESTABLISHED
*** - Materials are in *Non-Airborne* form**

3. HEALTH HAZARDS

Primary Routes of Exposure: Eyes: Yes **Skin:** Yes **Inhalation:** Yes
Eye Contact: Cause severe irritation and may cause burn.
Skin Contact: Cause irritation and sensitization. Symptoms can be immediate or delayed several hours.
Inhalation: Can cause respiratory tract irritation.
Ingestion: Can cause nausea, headache, and gastrointestinal irritation.
Other: Preexisting skin sensitization may be aggravated by exposure to this product.

4. FIRST AID MEASURES

Eyes: Flush eyes thoroughly with water for at least 15 minutes while holding eyelids open. Seek medical attention.
Skin: Remove contaminated clothing. Wipe excess from skin and wash the affected area thoroughly with soap and water. Wash contaminated clothing thoroughly before reuse.
Inhalation: Remove to fresh air, and provide oxygen or artificial respiration if needed. Obtain medical attention; symptoms can be delayed up to several hours.
Ingestion: DO NOT induce vomiting. Give 1-2 cups of water or milk unless the person is drowsy, convulsing, or unconscious. Get medical attention.

5. FIRE FIGHTING MEASURES

Flammable Properties: Flash Point: >200°F (PMCC)
Explosive Limits: Not applicable **Auto-Ignition Temperature:** Not applicable
Hazardous Decomposition Products: oxides of nitrogen, Carbon monoxide, carbon dioxide and other organic materials.

EXTINGUISHING MEDIA AND FIRE FIGHTING INSTRUCTIONS: When sufficiently large quantities are present, firefighters should be equipped with full bunker gear, including a positive pressure, NIOSH approved, self-contained breathing apparatus. Extreme heat or water contamination may cause closed containers to explode.
Extinguishing Media: Use carbon dioxide, dry chemical, or appropriate foam.

6. ACCIDENTAL RELEASE MEASURES

Ventilate the spill area and evacuate if necessary. Remove all ignition sources. Dike and contain large spills. Flush area with water spray. Clean-up personnel should use adequate protective equipment.

7. HANDLING AND STORAGE

Store in a cool; dry place, in closed containers at room temperature. Avoid contact with incompatible materials. Wear protective eyewear, chemical-resistant gloves, and other protective clothing as appropriate.

8. EXPOSURE CONTROL AND PERSONAL PROTECTION

Engineering/Ventilation Controls: Effective engineering controls should be used whenever possible to eliminate and/or reduce worker exposure to all respiratory hazards. General ventilation, local ventilation, or isolation may prove adequate to keep airborne concentrations below exposure limits.
Respiratory Protection: Not required under normal conditions in a well-ventilated workplace.
Skin Protection: Impervious gloves and protective clothing should be worn as necessary.
Eye Protection: Chemical splash goggles or safety glasses with side shields should be worn as appropriate.

9. STABILITY AND REACTIVITY

Chemical Stability: Stable under normal conditions and use.
Conditions and Materials to Avoid: Reacts with epoxy and strong oxidizing agents.
Hazardous Polymerization: Will not occur.

10. PHYSICAL AND CHEMICAL PROPERTIES

Appearance/Odor:	Clear liquid, ammoniacal odor	**Boiling Point:**	Not determined
Vapor Pressure (mm Hg):	<1 @25°C	**Vapor Density (air=1):**	>1
Specific Gravity:	1.04	**Solubility in Water:**	Slightly soluble

11. TOXICOLOGICAL INFORMATION

Acute Toxicity Data: Not available **Chronic Toxicity Data:** Not available

12. DISPOSAL CONSIDERATIONS

Keep out of surface waters, sewers, and waterways entering or leading to surface waters. Notify authorities if any exposure to the environment occurs or is likely to occur. Utilize an appropriate disposal facility, in compliance with applicable federal, state, and local environmental control regulations.

13. TRANSPORTATION INFORMATION

DOT/IATA Proper Shipping Name: Amines, Liquid, Corrosive, NOS (Aliphatic Amines)
Hazard class: 8 UN: 1760 PG: III

14. REGULATORY INFORMATION

TSCA: The chemical components of this product are included in the TSCA Chemical Substance Inventory, as required.
SARA TITLE III:
Section 313 – Toxic Chemicals: None
Section 311/312 – Hazard Categories:

Fire Hazard:	No	**Reactivity Hazard:**	No
Sudden Release of Pressure Hazard:	No	**Immediate (Acute) Health Hazard:**	Yes
Delayed (Chronic) Health Hazard:	No		

OSHA Hazard Communication Standard Hazard Classes:

NFPA Hazards:	Health: 3	Flammability: 1	Reactivity: 0
HMIS Hazards:	Health: 3	Flammability: 1	Reactivity: 0

MATERIAL SAFETY DATA SHEET

1. MATERIAL IDENTIFICATION

Product Name: **ACRAN NOVOLAC FLOOR COATING (RESIN, PART-A)**
Chemical Family: Epoxy Resin Mixture
Company Name: Eastern Resins Corp.
1174 River Street
Woonsocket, RI 02895, USA

BUSINESS PHONE: (401) 769-6700
EMERGENCY PHONE: (800) 255-3924

2. COMPOSITION

Chemical Name	CAS No	Wt %	Exposure Limits ACGIH TLV-TWA	Exposure Limits OSHA PEL
Bisphenol-A epoxy resin	25068-38-6	60-80	N/E	N/E
Bisphenol-F epoxy resin	28064-14-4	10-20	N/E	N/E
Cresyl Glycidyl ether	2210-79-9	5-10	N/E	N/E
Titanium dioxide*	13463-67-7	1-10	10 mg/m3	10 mg/m3
Carbon Black*	1222-86-4	<1	3.5 mg/m3	3.5 mg/m3

Abbreviations: N/E - NOT ESTABLISHED
*** - Materials are in *Non-Airborne* form**

3. HEALTH HAZARDS

Primary Routes of Exposure: Eyes: Yes Skin: Yes Inhalation: Yes
Eye Contact: May cause irritation and swelling.
Skin Contact: May cause irritation and sensitization. Symptoms can be immediate or delayed several hours.
Inhalation: May cause irritation and temporary or permanent sensitization.
Ingestion: May cause irritation.
Other: Preexisting skin sensitization may be aggravated by exposure to this product.

4. FIRST AID MEASURES

Eyes: Flush eyes thoroughly with water for at least 15 minutes while holding eyelids open. Seek medical attention.
Skin: Remove contaminated clothing. Wipe excess from skin and wash the affected area thoroughly with soap and water. Wash contaminated clothing thoroughly before reuse.
Inhalation: Remove to fresh air, and provide oxygen or artificial respiration if needed. Obtain medical attention; symptoms can be delayed up to several hours.
Ingestion: DO NOT induce vomiting. Give 1-2 cups of water or milk unless the person is drowsy, convulsing, or unconscious. Get medical attention.

5. FIRE FIGHTING MEASURES

Flammable Properties: Flash Point: >300°F (PMCC)
Explosive Limits: Not applicable **Auto-Ignition Temperature:** Not applicable
Hazardous Decomposition Products: Carbon monoxide, carbon dioxide, aldehydes, and other organic substances.

EXTINGUISHING MEDIA AND FIRE FIGHTING INSTRUCTIONS: When sufficiently large quantities are present, firefighters should be equipped with full bunker gear, including a positive pressure, NIOSH approved, self-contained breathing apparatus. Extreme heat or water contamination may cause closed containers to explode.
Extinguishing Media: Use carbon dioxide, dry chemical or appropriate foam

6. ACCIDENTAL RELEASE MEASURES

Ventilate the spill area and evacuate if necessary. Remove all ignition sources. Dike and contain large spills. Clean-up personnel should use adequate protective equipment.

7. HANDLING AND STORAGE

Store in a cool; dry place, in closed containers at room temperature. Avoid contact with incompatible materials. Wear protective eyewear, chemical-resistant gloves, and other protective clothing as appropriate.

8. EXPOSURE CONTROL AND PERSONAL PROTECTION

Engineering/Ventilation Controls: Effective engineering controls should be used whenever possible to eliminate and/or reduce worker exposure to all respiratory hazards. General ventilation, local ventilation, or isolation may prove adequate to keep airborne concentrations below exposure limits.

Respiratory Protection: If exposure limits are exceeded and local ventilation is unavailable, a supplied-air respirator or a self-contained breathing apparatus is required.

Skin Protection: Impervious gloves and protective clothing should be worn as necessary.

Eye Protection: Chemical splash goggles or safety glasses with side shields should be worn as appropriate.

9. STABILITY AND REACTIVITY

Chemical Stability: Stable under normal conditions and use.

Conditions and Materials to Avoid: Reacts with amines and strong oxidizing agents.

Hazardous Polymerization: Will not occur.

10. PHYSICAL AND CHEMICAL PROPERTIES

Appearance/Odor:	Color liquid, slight ether odor	**Boiling Point**:	Not determined
Vapor Pressure (mm Hg):	<1 @25°C	**Vapor Density (air=1):**	>1
Specific Gravity:	1.2	**Solubility in Water:**	None

11. TOXICOLOGICAL INFORMATION

This section provides toxicological information with regard to the pure form of the component indicated. It is suggested that persons trained in its evaluation interpret this information.

Epoxy Resins:	**Acute Oral LD_{50} (Rat):**	**11.4 g/kg**
	Acute Dermal LD_{50} (Rabbit):	**>20 g/kg**

12. DISPOSAL CONSIDERATIONS

Keep out of surface waters, sewers, and waterways entering or leading to surface waters. Notify authorities if any exposure to the environment occurs or is likely to occur. Utilize an appropriate disposal facility, in compliance with applicable federal, state, and local environmental control regulations.

13. TRANSPORTATION INFORMATION

DOT/IATA Proper Shipping Name: Not Regulated

14. REGULATORY INFORMATION

TSCA: The chemical components of this product are included in the TSCA Chemical Substance Inventory, as required.

SARA TITLE III:

Section 313 – Toxic Chemicals: None

Section 311/312 – Hazard Categories:

Fire Hazard:	No	**Reactivity Hazard:**	No
Sudden Release of Pressure Hazard:	No	**Immediate (Acute) Health Hazard**:	Yes
Delayed (Chronic) Health Hazard:	No		

OSHA Hazard Communication Standard Hazard Classes:

NFPA Hazards: Health: 2	Flammability: 0	Reactivity: 0
HMIS Hazards: Health: 2	Flammability: 0	Reactivity: 0

This information is furnished without warranty, expressed or implied, except that it is accurate to the best of our knowledge. The data on this sheet relates only to the specific material designated herein. **Eastern Resins Corp**. assumes no legal responsibility for use or reliance upon these data.

MATERIAL SAFETY DATA SHEET

1. MATERIAL IDENTIFICATION

Product Name: **ACRAN NOVOLAC FLOOR COATING (HARDENER, PART-B)**
Chemical Family: AMINE MIXTURE
Company Name: Eastern Resins Corp.
1174 River Street
Woonsocket, RI 02895, USA
BUSINESS PHONE: (401) 769-6700
EMERGENCY PHONE: (800) 255-3924

2. COMPOSITION

Chemical Name	Wt %	Exposure Limits ACGIH TLV-TWA	Exposure Limits OSHA PEL
Cycloaliphatic amine	50-70	N/E	N/E
Aliphatic amine	30-50	N/E	N/E

Abbreviations: **N/E - NOT ESTABLISHED**
*** - Materials are in *Non-Airborne* form**

3. HEALTH HAZARDS

Primary Routes of Exposure: **Eyes:** Yes **Skin:** Yes **Inhalation:** Yes
Eye Contact: Cause severe irritation and may cause burn.
Skin Contact: Cause irritation and sensitization. Symptoms can be immediate or delayed several hours.
Inhalation: Can cause respiratory tract irritation.
Ingestion: Can cause nausea, headache, and gastrointestinal irritation.
Other: Preexisting skin sensitization may be aggravated by exposure to this product.

4. FIRST AID MEASURES

Eyes: Flush eyes thoroughly with water for at least 15 minutes while holding eyelids open. Seek medical attention.
Skin: Remove contaminated clothing. Wipe excess from skin and wash the affected area thoroughly with soap and water. Wash contaminated clothing thoroughly before reuse.
Inhalation: Remove to fresh air, and provide oxygen or artificial respiration if needed. Obtain medical attention; symptoms can be delayed up to several hours.
Ingestion: DO NOT induce vomiting. Give 1-2 cups of water or milk unless the person is drowsy, convulsing, or unconscious. Get medical attention.

5. FIRE FIGHTING MEASURES

Flammable Properties: **Flash Point:** >200°F (PMCC)
Explosive Limits: Not applicable **Auto-Ignition Temperature:** Not applicable
Hazardous Decomposition Products: oxides of nitrogen, Carbon monoxide, carbon dioxide and other organic materials.

EXTINGUISHING MEDIA AND FIRE FIGHTING INSTRUCTIONS: When sufficiently large quantities are present, firefighters should be equipped with full bunker gear, including a positive pressure, NIOSH approved, self-contained breathing apparatus. Extreme heat or water contamination may cause closed containers to explode.
Extinguishing Media: Use carbon dioxide, dry chemical or appropriate foam.

6. ACCIDENTAL RELEASE MEASURES

Ventilate the spill area and evacuate if necessary. Remove all ignition sources. Dike and contain large spills. Flush area with water spray. Clean-up personnel should use adequate protective equipment.

7. HANDLING AND STORAGE

Store in a cool; dry place, in closed containers at room temperature. Avoid contact with incompatible materials. Wear protective eyewear, chemical-resistant gloves, and other protective clothing as appropriate.

8. EXPOSURE CONTROL AND PERSONAL PROTECTION

Engineering/Ventilation Controls: Effective engineering controls should be used whenever possible to eliminate and/or reduce worker exposure to all respiratory hazards. General ventilation, local ventilation, or isolation may prove adequate to keep airborne concentrations below exposure limits.
Respiratory Protection: If exposure limits are exceeded and local ventilation is unavailable, a supplied-air respirator or a self-contained breathing apparatus is required.
Skin Protection: Impervious gloves and protective clothing should be worn as necessary.
Eye Protection: Chemical splash goggles or safety glasses with side shields should be worn as appropriate.

9. STABILITY AND REACTIVITY

Chemical Stability: Stable under normal conditions and use.
Conditions and Materials to Avoid: Reacts with epoxy and strong oxidizing agents.
Hazardous Polymerization: Will not occur.

10. PHYSICAL AND CHEMICAL PROPERTIES

Appearance/Odor:	Clear liquid, ammoniacal odor	**Boiling Point:**	Not determined
Vapor Pressure (mm Hg) :	<1 @25°C	**Vapor Density (air=1) :**	>1
Specific Gravity:	1.0	**Solubility in Water:**	Slightly soluble

11. TOXICOLOGICAL INFORMATION

Acute Toxicity Data: Not available **Chronic Toxicity Data:** Not available

12. DISPOSAL CONSIDERATIONS

Keep out of surface waters, sewers, and waterways entering or leading to surface waters. Notify authorities if any exposure to the environment occurs or is likely to occur. Utilize an appropriate disposal facility, in compliance with applicable federal, state, and local environmental control regulations.

13. TRANSPORTATION INFORMATION

DOT/IATA Proper Shipping Name: NOT REGULATED

14. REGULATORY INFORMATION

TSCA: The chemical components of this product are included in the TSCA Chemical Substance Inventory, as required.
SARA TITLE III:
Section 313 – Toxic Chemicals: None
Section 311/312 – Hazard Categories:

Fire Hazard:	No	**Reactivity Hazard:**	No
Sudden Release of Pressure Hazard:	No	**Immediate (Acute) Health Hazard:**	Yes
Delayed (Chronic) Health Hazard:	No		

OSHA Hazard Communication Standard Hazard Classes: Corrosive

NFPA Hazards: Health: 3	Flammability: 1	Reactivity: 0	
HMIS Hazards: Health: 3	Flammability: 1	Reactivity: 0	

This information is furnished without warranty, expressed or implied, except that it is accurate to the best of our knowledge. The data on this sheet relates only to the specific material designated herein. **Eastern Resins Corp**. assumes no legal responsibility for use or reliance upon these data.

26 50 00 LIGHTING

26 51 00 INTERIOR LIGHTING

26 51 13 Interior Lighting Fixtures, Lamps, and Ballasts

The following lighting fixture schedule shows all the interior lighting. Manufacturing specifications and installation instruction are also included in this section.

No.	NAME	LOCATION	QUA-NTITY	LAMP	WATT-AGE	PRODUCT	MANUFAC-TURER	CATALOGUE NUMBER	FINISH COLOR
A_fixture	Ambient light fixture	above heating/cooling panels in all modules	14			36 inch SM series	American Flourescent	SM130RSE8	White
A_tube	Ambient light tube		14	T8	32	Philips Advtange T8	Philips	20488-3	
B_fixture _living	Under shelf living	above desk in living room	1	L.E.D	6	TSM 24 1/2" Black Orion LED Under Cabinet Light	TSM	71896	Black
B_fixture _kitchen	Under cabinet kitchen	above kitchen counter	1	L.E.D	12	48 1/2" White Orion LED Under Cabinet Light	TSM	60268	White
B_fixture _bath	Under cabinet bath	in medicine cabinet	1	L.E.D	2.5	9 1/2" White Finish Orion LED Under Cabinet Light	TSM	60035	White
B_fixture _driver	Under cabinet adapter		3			TSM Orion 18 Watt Wall Plug In LED Driver	TSM	22500	Black
C_fixture	Pendant Light	Living Room	5				Lightolier	FS02	Satin Aluminum
C_bulb	Pendant Light bulb	Living Room	5	4-Pin Tube	13	Philips PL-C Cluster 4-Pin Base	Philips	383257 to 383356	
D_fixture	Bed Light	Bedroom	1			Soli T5-Acrylic Diffuser 3 foot	Lightolier	48022ALU	metallic aluminum
D_bulb	Bed Light bulb	Bedroom	1	T5	21	Philips Silhouette T5	Philips	23077 to 23086	
E_fixture	Mirror Light	bathroom	2			Alice Bullnose Diffuser 2 foot	Lightolier	46824PC	polished chrome
E_bulb	Mirror Light bulb	bathroom	2	T8	17	Philips F17T8 bulb	Philips	F17T8 TL835	
F	LED trellis	in trellis tube (indoor part, 4/tube x 21 tubes)	84		0.5	Modular lighting system	Borealis		light color (lemon)

A. Ambient light (fixture)

SM SERIES

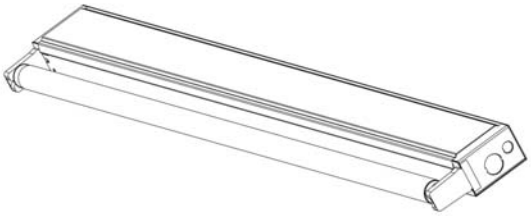

DESCRIPTION

This series of strip lights is designed to mount one lamp on the side of the channel. The series is available in 24", 36" and 48" lengths.
All units use T8 lamps.

CONSTRUCTION

Housing, cover and ends are die formed of 22 gauge cold rolled steel. Standard mounting holes and wiring knockouts are included. Can be stem, chain, or direct mounted; and can be hung individually or in continuous runs.

FINISH

Housing interior and exterior are finished in lighting grade white baked gloss enamel paint.

DIFFUSER

There is no diffuser for these fixtures. The fluorescent lamps are exposed.

ELECTRICAL

All units are wired with U.L. listed high power factor, instant start, Class P, ballasts for 120 volt 60 hertz A.C. operation, 0 degree start. Lampholders are rotating lock, medium bi-pin type. All fixtures are U.L. listed for damp location.

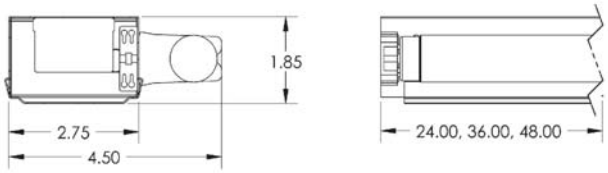

SM100 Series (1 Light)

ENERGY STAR

ORDERING INFORMATION					
Model No.		DIMENSIONS			
Single Side Mount	Fluorescent Lamps	L	W	D	Mtg. Ill.
SM120RSE8	(1) F17T8 24"	24"	4 5/8"	1 7/8"	128
SM130RSE8	(1) F25T8 36"	36"	4 5/8"	1 7/8"	128
SM140RSE8	(1) F32T8 48"	48"	4 5/8"	1 7/8"	128

86B 2345 N. Ernie Krueger Circle - Waukegan, Illinois 60087 - phone (847)249-5970 - fax (847)249-2618

American Fluorescent Corporation

A. Ambient light (tube)

Philips Advantage T8 Lamps

featuring ALTO® Lamp Technology

High Performance, Environmentally Responsible Lamps:
High Lumen Output and Low Mercury

Ideal for applications requiring maximum light output

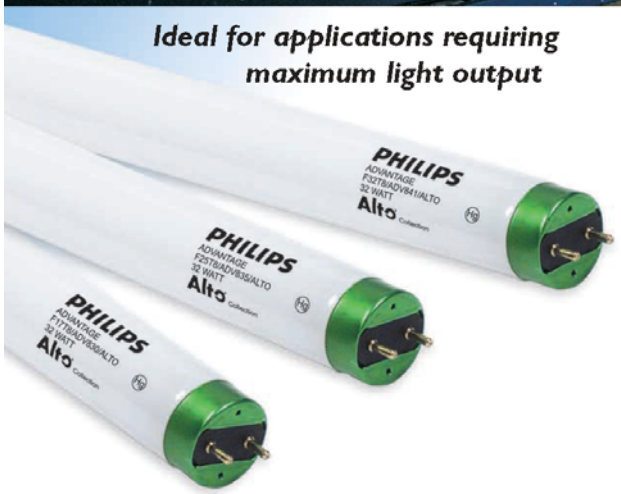

High Performance

–10% more initial lumens than standard T8 lamps
–32W has 3100 initial lumens

Outstanding Lumen Performance

HI-VISION® Phosphor combined with Philips exclusive cathode guard delivers:
–97% lumen maintenance
–Reduced lamp-end blackening
–85 CRI

Ultimate System Solution

–Higher lumens enable multiple system options to maximize energy savings and reduce lighting costs
–Fully dimmable without burn-in
–Ideal for light harvesting

Sustainable Lighting Solution

Reduces the impact on the environment
–Low mercury
–Energy efficient
–Extended life

Philips Advantage T8 Warranty Period: 36 Months

1) Average life under specified test conditions with lamps turned off and restarted no more frequently than once every 3 operating hours. Lamp life is appreciably longer if lamps are started less frequently.
2) Average life under engineering data with lamps turned off and restarted once every 12 operating hours.

Philips Advantage T8 Lamps Rated Average Life

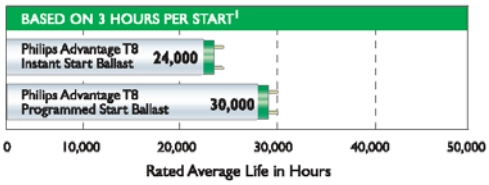

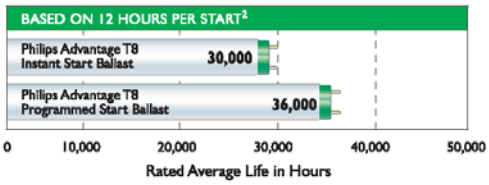

PHILIPS

Philips Lighting Company
200 Franklin Square Drive
P.O. Box 6800
Somerset, NJ 08875-6800
1-800-555-0050
A Division of Philips Electronics North America Corporation

Printed in USA 03/07 P-5369-H

www.philips.com

Philips Lighting
281 Hillmount Road
Markham, Ontario
Canada L6C 2S3
1-800-555-0050
A Division of Philips Electronics Ltd.

Philips Advantage T8 Lamps *featuring* ALTO® *Lamp Technology*

Electrical, Technical and Ordering Data (Subject to change without notice)

Product Number	Ordering Code	Package Qty.	Color Temp. (Kelvin)	Nominal Length (in)	Rated Average Life (hrs)[1] 12-hr on Instant Start	12-hr on Programmed Start	Approx. Initial Lumens[2]	Design Lumens[3]	Color Rendering (CRI)	Lumen Maintenance
20483-4	F17T8/ADV830/ALTO	25	3000K	24	30,000	36,000	1500	1425	85	95%
20484-2	F17T8/ADV835/ALTO	25	3500K	24	30,000	36,000	1500	1425	85	95%
20485-9	F17T8/ADV841/ALTO	25	4100K	24	30,000	36,000	1500	1425	85	95%
20487-5	F17T8/ADV850/ALTO	25	5000K	24	30,000	36,000	1420	1350	82	95%
20488-3	F25T8/ADV830/ALTO	25	3000K	36	30,000	36,000	2380	2260	85	95%
20490-9	F25T8/ADV835/ALTO	25	3500K	36	30,000	36,000	2380	2260	85	95%
20495-8	F25T8/ADV841/ALTO	25	4100K	36	30,000	36,000	2380	2260	85	95%
20498-2	F25T8/ADV850/ALTO	25	5000K	36	30,000	36,000	2275	2160	82	95%
Ⓔ 13987-3	F32T8/ADV830/ALTO	25	3000K	48	30,000	36,000	3100	2950	85	97%
Ⓔ 13988-1	F32T8/ADV835/ALTO	25	3500K	48	30,000	36,000	3100	2950	85	97%
Ⓔ 13989-9	F32T8/ADV841/ALTO	25	4100K	48	30,000	36,000	3100	2950	85	97%
Ⓔ 13990-7	F32T8/ADV850/ALTO	25	5000K	48	30,000	36,000	3100	2950	85	97%

1) Average life under engineering data with lamps turned off and restarted once every 12 operating hours.
2) Approximate initial lumens. The lamp lumen output is based upon lamp performance after 100 hours of operating life, when the output is measured during operation on a reference ballast under standard laboratory conditions. For expected lamp lumen output, commercial ballast manufacturers can advise the appropriate ballast factor for each of their ballasts when they are informed of the designated lamp. The ballast factor is a multiplier applied to the designated lamp lumen output.
3) Design lumens are the approximate lamp lumen output at 40% of the lamp's rated average life. This output is based upon measurements obtained during lamp operation on a reference ballast under standard laboratory conditions.
Ⓔ Lamp meets US Federal Minimum Efficiency Standards.

Philips Advantage T8 32W Systems vs. Standard T8 32W Systems

Energy Savings: 2 Lamp vs. 2 Lamp System

Electronic Ballast	Ballast Factor	No. of Lamps	Standard T8 Lumens	Advantage T8 Lumens	System Watts	System Lumens	Savings
Standard T8	0.87	2	2800		58	4872	
Reduced Light Output T8	0.75	2		3100	51	4650	$2.80/yr

When you combine Advantage T8 lamps with reduced light output electronic ballasts, you get these results:

- Produce comparable light output
- Save 7 system watts vs. standard T8 system
- Save $2.80 per fixture per year
- Energy savings based on 4000 hrs/yr @ $.10 kw/hr

Philips Advantage T8 32W Systems vs. Standard T8 32W Systems

Energy Savings: 2 Lamp vs. 3 Lamp System

Electronic Ballast	Ballast Factor	No. of Lamps	Standard T8 Lumens	Advantage T8 Lumens	System Watts	System Lumens	Savings
Standard T8	0.87	3	2800		88	7308	
High Light Output T8	1.20	2		3100	78	7440	$4.00/yr

When you combine Advantage T8 lamps with increased light output Ballasts, a 2 lamp Advantage T8 system vs. a 3 lamp standard T8 system will:

- Produce comparable light output
- Save 10 system watts
- Save $4.00 per fixture per year
- Energy savings based on 4000 hrs/yr @ $.10 kw/hr
- Reduce lighting installation costs (lamps, ballasts, fixtures and labor)

† This lamp is better for the environment because of its reduced mercury content. All Philips ALTO® lamps give you end-of-life options which can simplify and reduce your lamp disposal costs depending on your state and local regulations.

B. Under shelf light in living unit

LAMPS PLUS > Undercabinet > Low Voltage 12v > L.E.D. > 71896

Return To Product Sort

Zoom In

Larger View

In Scene

TSM 24 1/2" Black Orion LED Under Cabinet Light
(71896)

This low voltage black finish Orion under cabinet light is easy to install.

Our Price $79.99

Compare $119.99

QTY: 1 **Add To Cart**

Add to Portfolio

View Related Items

Add to Project
Print This Item
E-mail This Item
View Similar Items

Personal Shopper Callback

Live Chat

Enhance your furniture, kitchen or work area with this low-voltage Orion under cabinet LED light. The design features long-lasting, energy-efficient LED bulbs that are environmentally friendly. The light is cool-to-the-touch and attaches with heavy duty peel-off adhesive tape, so installation is a breeze. Black finish. Includes a 9" jumper cable. Please note: will work only with a TSM power plug-in drive (sold separately).

- Black finish.
- 20 LED lights per foot.
- 6 watt per fixture.
- 1 1/2" wide by 1/2" height by 24 1/2" long.
- Includes a 9" jumper cable.
- Requires a TSM power plug-in (sold separately).

B. Under cabinet light in kitchen unit

LAMPS PLUS > Undercabinet > Low Voltage 12v > L.E.D. > 60268 **Return To Product Sort**

Zoom In Larger View In Scene

48 1/2" White Orion LED Under Cabinet Light
(60268)

This low voltage white under cabinet LED light is an energy-efficient lighting solution.

Our Price $149.99

Compare $224.99

QTY: 1 **Add To Cart**

Add to Portfolio

View Related Items

Add to Project
Print This Item
E-mail This Item
View Similar Items

Personal Shopper Callback Live Chat

Enhance your furniture, kitchen or work area with this Orion under cabinet LED light. The design features long-lasting, energy-efficient LED bulbs. The light attaches with heavy duty peel-off adhesive tape, so installation is a breeze. White finish. Includes a 9" jumper cable. Power plug-in required (sold separately).

- White finish.
- 20 LED lights per foot.
- 12 watts per fixture.
- 1 1/2" wide by 1/2" height by 48 1/2" lnog.
- Includes a 9" jumper cable.
- TSM Power plug-in required (sold separately).

B. Under cabinet light in bath

LAMPS PLUS > Undercabinet > Low Voltage 12v > L.E.D. > 60035

Return To Product Sort

Zoom In

Larger View

In Scene

9 1/2" White Finish Orion LED Under Cabinet Light

(60035)

This low voltage white finish Orion under cabinet light is energy-efficient.

Our Price $34.99

Compare $54.99

QTY: 1 **Add To Cart**

Add to Portfolio

View Related Items

Add to Project
Print This Item
E-mail This Item
View Similar Items

Personal Shopper Callback

Live Chat

Enhance your furniture, kitchen or work area with this Orion under cabinet LED light. The design features long-lasting, energy-efficient LED bulbs. The light attaches with heavy duty peel-off adhesive tape, so installation is a breeze. White finish. Includes a 9" jumper cable. Please note: will work only with a TSM power plug-in driver (sold separately).

- White finish.
- 14 LED lights.
- 2 1/2 watts per fixture.
- 1 1/2" wide by 1/2" height by 9 1/2" long.
- Includes a 9" jumper cable.
- TSM Power plug-in required (sold separately).

B. Under cabinet light adapter

LAMPS PLUS > Other/Accessories > 22500

Return To Product Sort

Zoom In

Larger View

TSM Orion 18 Watt Wall Plug In LED Driver
(22500)

Plug-in power source LED driver for use with TSM Orion under cabinet lights up to 6 feet.

Our Price $25.99 **FREE SHIPPING*** on this item!

Compare $39.99

QTY: 1 **Add To Cart**

Add to Portfolio

View Related Items

Add to Project
Print This Item
E-mail This Item
View Similar Items

Personal Shopper Callback Live Chat

This power source LED driver plugs into any standard wall outlet. 18 watts, 12 volts DC, Black color. Will power 6 feet outlet of FL20 series and 27 feet of FL09 series. Out put cord is 5 feet long. Used for dry location only. From TSM Associates.

Buy Fast. Feel Secure.® Pay Later with Bill Me Later®! Details

C. Pendant light (fixture)

Decorative Lighting

search

E-Mail this page

Vetro Pendants
Vetro - FS Series
FS02 Glass Cylinder

Specification Sheets | Instruction Sheets | For Photometry Information click here.

Mounting Options

Catalog Number	Finish
CTC	Close to Ceiling Kit, Satin Aluminum
SK01	120" Cable, Satin Aluminum Canopy
SK02	300" Cable, Satin Aluminum Canopy
ST01	36" L x 3/8" dia Satin Aluminum Stem/Canopy
ST02	60" L x 3/8" dia Satin Aluminum Stem/Canopy
TM01	Track mounting kit

Fixture

Catalog Number	Finish	Lamping	Ballast	Voltage
FS02	Satin Aluminum	-13W 4-Pin Twin Tube		120V
FS202	Satin Aluminum	-13W 4-Pin Twin Tube		277V
IS02	Satin Aluminum	-50W T-4 Mini-Can		120V

A sophisticated pendant presented under glass. Layers, space, light, and basic geometry provide the depth and visual interest suited to enhance a variety of architectural styles.

This is a two part order. Please select your fixture and mounting options separately.

C. Pendant light (bulb)

Architectural Decorative **FS02**

Pendant Vetro

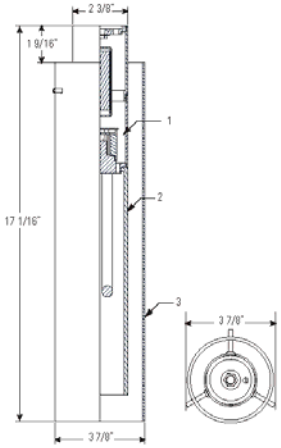

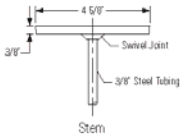

Stem

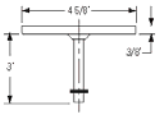

Close to Ceiling

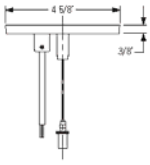

Cable/Cord

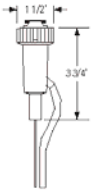

Track Mount

Complete Fixture Minus Suspension Kit:

Cat. No.	Color	Lamp	Watts	Volts	Options
FS02	Satin Aluminum	CFL 4- Pin Electronic Twin Tube	13	120	N/A
FS202	Satin Aluminum	CFL 4- Pin Electronic Twin Tube	13	277	N/A
FS02Q	Satin Aluminum	CFL Quad	13	120	N/A
FS202Q	Satin Aluminum	CFL Quad	13	277	N/A
IS02	Satin Aluminum	T-4 Mini Can	50	120	N/A

Suspension

Cat. No	Finish	Description
SK01	Satin Aluminum	Clear Metallic Straight Cord/cable, 120" Length, (10') with canopy
SK02	Satin Aluminum	Clear Metallic Straight Cord/cable, 300" Length, (25') with canopy
ST01	Satin Aluminum	36" Length 3/8" Stem with canopy
ST02	Satin Aluminum	60" Length 3/8" Stem with canopy
CTC	Satin Aluminum	Close To Ceiling Kit with canopy
TM01	Satin Aluminum	Silver Track Mounting Kit with Clear Metallic Straight Cord/Cable, 120" Length, (10')

Features

1. **Power Compartment:** Die Cast and Machined Aluminum Components. Brushed and Clear Lacquer Finish.
2. **Primary Glass:** Triplex Hand Blown Glass.
3. **Decorative Glass Casing:** A Cylinder of Clear Glass 3/16" Thick with Polished Edges, Die Cast Aluminum Holder Ring and Stainless Steel Support Pins.

Lamping (by others)

Incandescent: 50W Max. T-4 Mini Candelara
Fluorescent: 13W 4-Pin Electronic Twin Tube Specify Lightolier #**56964**
(see chart below)**
****Compact Fluorescent:**

General Electric	Osram/Sylvania	Phillips
(1) 13W Twin Tube 4-Pin Compact Fluorescent Lamp		
N/A	CF13DS/E/*	N/A
(1) 13W Quad Tube 4-Pin Compact Fluorescent Lamp		
F13DBX/SPX*/4P	CF13DD/E/*	PL-C13W/*/4P/ALTO

*Manufacturers color temperature designation

Electrical

Lampholders: E11 Base, Porcelain, Plated Copper Alloy Screw Shell
Compact Fluorescent: 13W Twin. 2GX7 Base, High Impact Thermostat Polymer with Brass Contacts.
13W Quad: G24Q-1 Base, High Impact Thermostat Polymer with Brass Contacts.

Ballasts: Fluorescent: Electronic

	13 Watts	
Voltage	120	277
Max. Watts	18	14
Max. Line Current (Amps)	.17	.12

Labels

cULus Listed. Suitable for Damp Locations.

Job Information **Type:**

Job Name:

Cat. No.:

Lamp(s):

Notes:

Lightolier a Genlyte company www.lightolier.com
631 Airport Road, Fall River, MA 02720 • (508) 679-8131 • Fax (508) 674-4710
We reserve the right to change details of design, materials and finish.

LIGHTOLIER®

Catalog No. FS02/FS01, 13W 4-Pin Twin Tube, 800 Lumens.

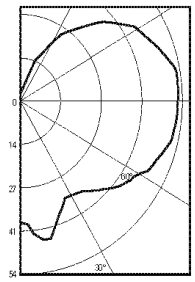

Report No 3108FR

CANDLEPOWER SUMMARY

Angle	Mean CP	Angle	Mean CP
0	39	90	54
5	42	95	54
10	45	100	54
15	43	105	53
20	38	110	51
25	34	115	49
30	34	120	47
35	35	125	44
40	37	130	41
45	40	135	37
50	43	140	33
55	45	145	29
60	47	150	25
65	50	155	20
70	51	160	15
75	53	165	10
80	54	170	5
85	54	175	2
90	54	180	1

ZONAL LUMEN SUMMARY

Zone	Lumens
0-10	4.1
10-20	11.89
20-30	16.15
30-40	22.11
40-50	31.03
50-60	40.41
60-70	49.15
70-80	55.68
80-90	58.92
90-100	58.92
100-110	55.68
110-120	49.66
120-130	39.53
130-140	28.74
140-150	18.32
150-160	9.51
160-170	2.91
170-180	.29

ZONAL LUMENS AND PERCENTAGES

Zone	Lumens	%Lamp	%Fixt
0-30	32.14	4	5.8
0-40	54.24	6.8	9.8
0-60	125.69	15.7	22.8
0-90	289.44	36.2	52.4
90-120	163.26	20.4	29.6
90-130	202.8	25.4	36.7
90-150	249.85	31.2	36.7
90-180	262.55	32.8	47.6
0-180	551.99	69	100

** Efficiency = 69% **

COEFFICIENTS OF UTILIZATION

Ceiling	80%				70%		50%		30%		
Wall	70	50	30	10	50	10	50	10	50	10	0
RCR	Zonal Cavity Method - Effective Floor Reflectance = 20%										
0	74	74	74	74	69	69	58	58	49	49	36
1	64	60	56	52	55	48	46	40	37	33	23
2	57	50	44	40	46	37	38	31	31	25	17
3	51	43	37	32	39	29	33	24	26	20	13
4	46	37	31	26	34	24	28	20	23	16	10
5	42	33	26	22	30	20	25	17	20	14	8
6	39	29	23	18	27	17	22	14	18	12	7
7	36	26	20	16	24	15	20	12	16	10	6
8	33	24	18	14	22	13	18	11	15	9	5
9	31	22	16	12	20	11	17	9	14	8	4
10	29	20	14	11	18	10	15	8	13	7	4

Room Cavity Ratio

Determined In Accordance With Current IES Published Procedures
Luminaire Input Watts = 16.0

Catalog No. FS02Q/FS01Q, 13W 4-Pin Quad Tube, 900 Lumens.

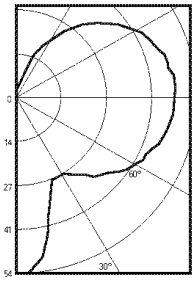

Report No. 3105FR

CANDLEPOWER SUMMARY

Angle	Mean CP	Angle	Mean CP
0	54	90	49
5	54	95	49
10	48	100	48
15	43	105	47
20	37	110	46
25	28	115	45
30	28	120	42
35	30	125	40
40	32	130	37
45	35	135	34
50	37	140	30
55	40	145	26
60	42	150	22
65	44	155	18
70	46	160	13
75	47	165	8
80	48	170	4
85	48	175	2
90	49	180	1

ZONAL LUMEN SUMMARY

Zone	Lumens
0-10	4.96
10-20	10.5
20-30	13.06
30-40	18.89
40-50	27.06
50-60	35.81
60-70	43.7
70-80	49.73
80-90	52.51
90-100	53.33
100-110	49.99
110-120	44.19
120-130	35.6
130-140	26.11
140-150	16.58
150-160	6.29
160-170	2.51
170-180	.25

ZONAL LUMENS AND PERCENTAGES

Zone	Lumens	%Lamp	%Fixt
0-30	28.52	3.2	5.8
0-40	47.41	5.3	9.6
0-60	110.26	12.3	22.4
0-90	256.23	28.5	52
90-120	147.51	16.4	29.9
90-130	183.11	20.3	37.1
90-150	225.8	25.1	37.1
90-180	236.85	26.3	48
0-180	493.07	54.8	100

** Efficiency = 54.8% **

COEFFICIENTS OF UTILIZATION

Ceiling	80%				70%		50%		30%		
Wall	70	50	30	10	50	10	50	10	50	10	0
RCR	Zonal Cavity Method - Effective Floor Reflectance = 20%										
0	59	59	59	59	55	55	46	46	39	39	28
1	51	47	44	41	43	38	36	32	30	26	18
2	45	40	35	31	36	29	30	24	24	20	13
3	41	34	29	25	31	23	26	19	21	16	10
4	37	30	24	20	27	19	22	16	18	13	8
5	34	26	21	17	24	16	20	13	16	11	6
6	31	23	18	15	21	13	18	11	14	9	5
7	28	21	16	13	19	12	16	10	13	8	5
8	26	19	14	11	17	10	14	9	12	7	4
9	25	17	13	10	16	9	13	8	11	6	4
10	23	16	11	9	14	8	12	7	10	5	3

Room Cavity Ratio

Determined In Accordance With Current IES Published Procedures
Luminaire Input Watts = 14.0

Catalog No. IS02/IS01, 50W T-4, 950 Lumens.

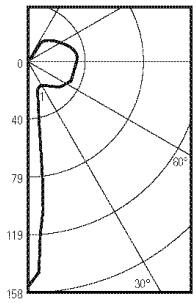

Report No. 3101FR

CANDLEPOWER SUMMARY

Angle	Mean CP	Angle	Mean CP
0	158	90	33
5	104	95	34
10	43	100	33
15	23	105	33
20	18	110	32
25	17	115	31
30	19	120	29
35	20	125	27
40	22	130	25
45	24	135	23
50	26	140	21
55	28	145	18
60	29	150	16
65	31	155	13
70	32	160	9
75	33	165	5
80	33	170	1
85	33	175	1
90	33	180	1

ZONAL LUMEN SUMMARY

Zone	Lumens
0-10	8.06
10-20	6.98
20-30	8.18
30-40	12.83
40-50	18.63
50-60	24.81
60-70	30.42
70-80	34.52
80-90	36.01
90-100	36.82
100-110	34.52
110-120	30.42
120-130	24.26
130-140	17.85
140-150	11.61
150-160	5.93
160-170	1.53
170-180	.1

ZONAL LUMENS AND PERCENTAGES

Zone	Lumens	%Lamp	%Fixt
0-30	23.21	2.4	6.8
0-40	36.04	3.8	10.5
0-60	79.48	8.4	23.1
0-90	180.42	19	52.5
90-120	101.76	10.7	29.6
90-130	126.02	13.3	36.7
90-150	155.48	16.4	36.7
90-180	163.04	17.2	47.5
0-180	343.46	36.2	100

** Efficiency = 36.2% **

COEFFICIENTS OF UTILIZATION

Ceiling	80%				70%		50%		30%		
Wall	70	50	30	10	50	10	50	10	50	10	0
RCR	Zonal Cavity Method - Effective Floor Reflectance = 20%										
0	39	39	39	39	36	36	31	31	26	26	19
1	34	31	29	27	29	25	24	21	20	18	12
2	30	26	23	21	24	19	20	16	16	13	9
3	27	23	19	17	21	15	17	13	14	11	7
4	25	20	16	14	18	13	15	11	12	9	5
5	22	18	14	12	16	11	13	9	11	7	5
6	21	16	12	10	14	9	12	8	10	6	4
7	19	14	11	9	13	8	11	7	9	6	3
8	18	13	10	8	12	7	10	6	8	5	3
9	16	12	9	7	11	6	9	5	7	4	3
10	15	11	8	6	10	6	8	5	7	4	2

Room Cavity Ratio

Determined In Accordance With Current IES Published Procedures
Luminaire Input Watts = 50

Job Information **Type:**

Lightolier a Genlyte company www.lightolier.com
631 Airport Road, Fall River, MA 02720 • (508) 679-8131 • Fax (508) 674-4710

LIGHTOLIER®

Instruction Sheet Number **IS:FS01**

INSTALLATION INSTRUCTIONS FOR LUMINAIRE VETRO SERIES

Read and understand these instructions before installing luminaire.
This luminaire is intended for installation in accordance with the National Electrical Code and local regulations. To assure full compliance with local codes and regulations, check with your local electrical inspector before installation. To prevent electrical shock, turn off electricity at fuse box before proceeding.
Retain these instructions for maintenance reference.

> **Note:** This instruction sheet covers several luminaire types and styles. Although the illustration may not depict the product exactly, the installation remains the same.

Luminaires Using SK Series Suspension Kits:

1) Unscrew LUMINAIRE BODY from TOP COVER to expose internal assembly (fig. 1).
2) Loosen THUMB SCREW on AIRCRAFT CABLE ADJUSTER and insert AIRCRAFT CABLE through the adjuster.
3) Determine approximate overall length luminaire is to hang. Cut off any excess POWER CORD from the canopy side and AIRCRAFT CABLE (Note: **DO NOT** cut the POWER CORD end with the fiberglass sleeving and tape). Make certain to add an extra 6" of POWER CORD and 1" of AIRCRAFT CABLE to overall height determined. 4) Once the luminaire is hung at the determined height re-tighten AIRCRAFT CABLE ADJUSTER THUMB SCREW.
5) Loosen, but do not remove, STRAIN RELIEF SCREWS.
6) Pass the POWER CORD through hole in TOP COVER and then through STRAIN RELIEF (fig. 2).
7) Re-tighten STRAIN RELIEF SCREWS.
8) Make electrical connections: Connect BLACK LUMINAIRE LEAD to HOT (BLACK) SUPPLY LEAD; WHITE LUMINAIRE LEAD to NEUTRAL (WHITE) SUPPLY LEAD; GROUND LUMINAIRE LEAD (COPPER) must be connected to the GROUND SUPPLY LEAD. Use the wire nuts supplied to make connections.
9) Pass the internal assembly back into LUMINAIRE BODY making certain the wires and connections are not pinched. Fully tighten the TOP COVER to the top of the LUMINAIRE BODY.
10) Install recommended lamp (provided by others).
11) Screw on INNER GLASS ASSEMBLY. For IA and IS versions insert LAMP GUARD into INNER GLASS ASSEMBLY (fig. 3).
12) For suspension installation see instruction sheet supplied with the suspension kits.

CAUTION: MAXIMUM WATTAGE AS MARKED ON LUMINAIRE MUST NOT BE EXCEEDED

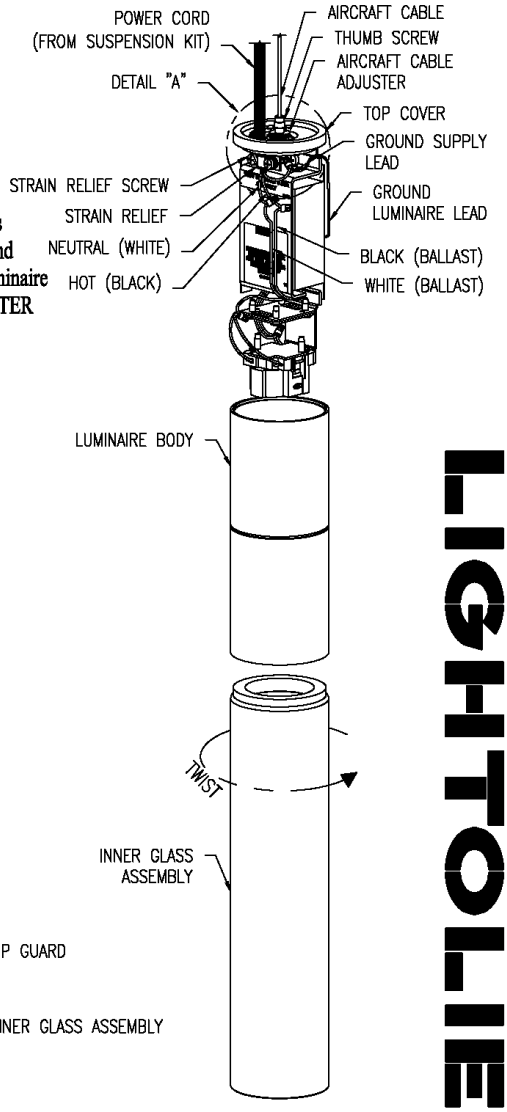

(FIG. 1)

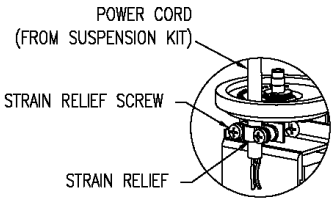

DETAIL "A"
(FIG. 2)

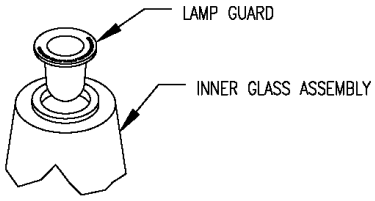

(FIG. 3)

Lightolier a Genlyte Group Company www.lightolier.com
631 Airport Road, Fall River, Ma 02720 (508) 679-8131 Fax (508) 674-4710

LIGHTOLIER®

Instruction Sheet Number **IS:FS01**

INSTALLATION INSTRUCTIONS FOR LUMINAIRE VETRO SERIES

Read and understand these instructions before installing luminaire.
This luminaire is intended for installation in accordance with the National Electrical Code and local regulations. To assure full compliance with local codes and regulations, check with your local electrical inspector before installation. To prevent electrical shock, turn off electricity at fuse box before proceeding.
Retain these instructions for maintenance reference.

> **Note:** This instruction sheet covers several luminaire types and styles. Although the illustration may not depict the product exactly, the installation remains the same.

Luminaires Using ST & CTC Series Suspension Kits:

1) Unscrew LUMINAIRE BODY from TOP COVER to expose internal assembly (fig. 1).
2) Unscrew AIRCRAFT CABLE ADJUSTER from TOP COVER and discard, retain HEX NUT (fig. 3).
3) Bring TOP COVER with the internal assembly up to STEM and insert STEM through both TOP COVER and internal assembly. Tighten STEM to TOP COVER and internal assembly with HEX NUT from the AIRCRAFT CABLE ADJUSTER (fig. 4). Tighten the LOCKING RING.
4) Insert SET SCREW into TOP COVER until SET SCREW top is flush to TOP COVER (note: there is no stop for the SET SCREW).
5) Loosen, but do not remove, STRAIN RELIEF SCREWS.
6) Bring the three-supply leads through the STEM and into STRAIN RELIEF (fig 2).
7) Re-tighten STRAIN RELIEF SCREWS.
8) Make electrical connections: Connect BLACK LUMINAIRE LEAD to HOT (BLACK) SUPPLY LEAD; WHITE LUMINAIRE LEAD to NEUTRAL (WHITE) SUPPLY LEAD; GROUND LUMINAIRE LEAD (COPPER) must be connected to the GROUND LEAD SUPPLY. Use the wire nuts supplied to make connections.
9) Pass internal assembly back into LUMINAIRE BODY, making certain the wires and connections are not pinched. Fully tighten TOP COVER to the top of LUMINAIRE BODY.
10) Install recommended lamp (provided by others).
11) Screw on INNER GLASS ASSEMBLY. For IA and IS versions insert LAMP GUARD into INNER GLASS ASSEMBLY (fig. 5).
12) For suspension installation see instruction sheet supplied with the Suspension kits.

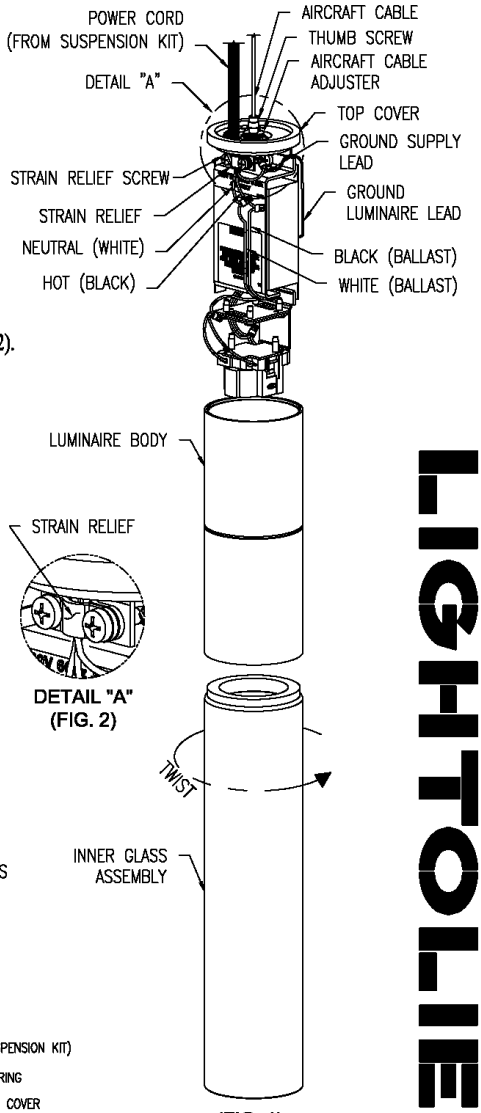

DETAIL "A"
(FIG. 2)

(FIG. 1)

CAUTION: MAXIMUM WATTAGE AS MARKED ON LUMINAIRE MUST NOT BE EXCEEDED

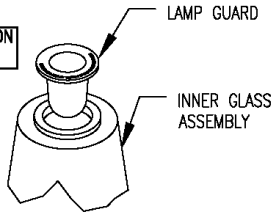

(FIG. 5)

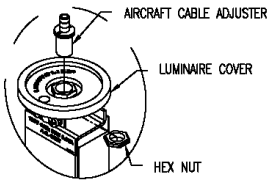

(FIG.3)

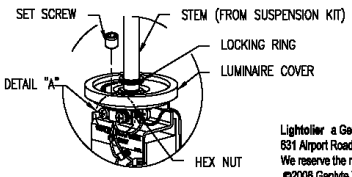

(FIG. 4)

Lightolier a Genlyte Group Company www.lightolier.com
631 Airport Road, Fall River, Ma 02720 (508) 679-8131 Fax (508) 674-4710

LIGHTOLIER®

D. bed light (fixture)

Instruction Sheet Number **IS:48021**

 For Assembly and Installation of Soli ADA Series Wall/Ceiling Mounted T-5 Fluorescent

Read and understand these instructions before installing luminaire.

This luminaire is intended for installation in accordance with the National Electrical Code and local regulations. To assure full compliance with local codes and regulations, check with your local electrical inspector before installation. To prevent electrical shock, turn off electricity at fuse box before proceeding.

Retain these instructions for maintenance reference.

A. FOR OCTAGONAL OUTLET BOX (J-BOX), GEM BOX OR SWITCH OUTLET BOX MOUNTING

1. Pull supply wires from OUTLET BOX through hole in MOUNTING PLATE (Fig.1). Secure MOUNTING PLATE to OUTLET BOX using screws provided with OUTLET BOX.
2. Insert tabs from OUTLET BOX COVERS into slots on MOUNTING PLATE to enclose OUTLET BOX.
3. Pull supply wires through center hole in BACK PLATE . Align BACK PLATE and mark holes for DRYWALL ANCHORS (supplied), screw DRYWALL ANCHORS into wall.
4. Secure BACKPLATE to MOUNTING PLATE and DRYWALL ANCHORS using screws provided.
5. While supporting BALLAST HOUSING, Make electrical connections: Black lead or lead without tracer marks to hot (Black) supply lead; White lead or lead with tracer marks to neutral (White) supply lead. Uninsulated wire is a ground wire and must be connected to grounding terminal or ground lead inside OUTLET BOX. Use WIRE NUTS.
6. Carefully push connections back into the OUTLET BOX.
7. Align tabs at top of BALLAST HOUSING with slots on BACK PLATE, snap in and push housing flush with wall.

CAUTION: MAKE CERTAIN THAT NO WIRES ARE PINCHED BETWEEN MOUNTING PLATE AND FIXTURE BODY.

8. Insert ALLEN HEAD SCREW (provided) into hole at bottom of BALLAST HOUSING and fasten BALLAST HOUSING to BACK PLATE (Fig. 1)

B. FOR DIFFUSER ATTACHMENT

Glass Diffuser: Secure DIFFUSER to BALLAST HOUSING with Philips head glass mounting screws (provided)

See Figs. 1 & 2.

Acrylic Diffuser:

1. Press PROTECTIVE BUSHINGS (supplied) through holes in ACRYLIC DIFFUSER.
2. Proceed as above **Glass Diffuser** instructions.

NOTE: If fixture is to be mounted without DIFFUSER, insert gray plastic push-in plugs (supplied) to cover glass mtg.holes in BALLAST HOUSING.

C. FOR FRONT COVER ATTACHMENT

1. After inserting Lamp, Snap the FRONT COVER onto end caps of BALLAST HOUSING (Fig. 1).
2. Insert ALLEN HEAD SCREWS into the holes at both ends of the fixture to secure front cover to BALLAST HOUSING.

D. To remove glass / acrylic for cleaning

1. Remove FRONT COVER by unscrewing ALLEN HEAD SCREWS at both end caps and unsnap FRONT COVER from end caps.
2. Remove lamp by rotating 90 degrees and gently pulling it out of the sockets.
3. Unfasten DUFFUSER (if used) from the BALLAST HOUSING.

Glass: clean with a small amount of glass cleaner on soft cloth to remove hand oils and dirt.

Acrylic: clean with mild soap and water.

FOR ELECTRICAL CONDUIT MOUNTING- see diagram and instructions on page two.

Figure 1

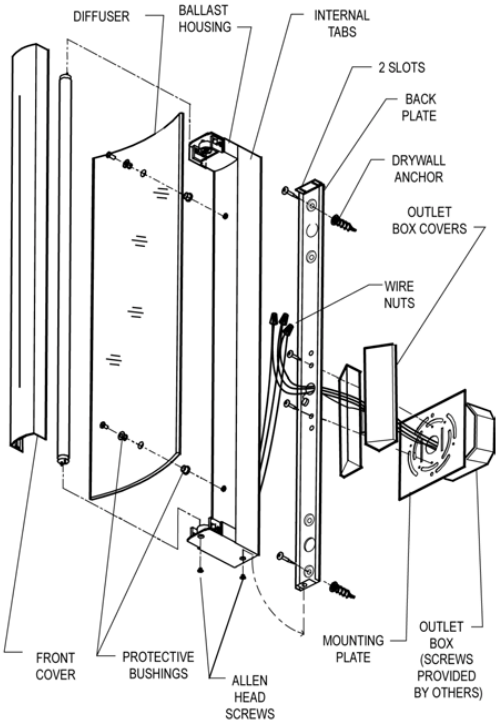

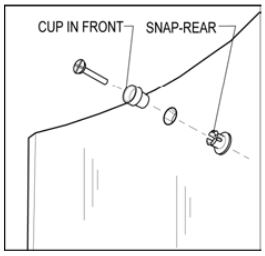

PROTECTIVE BUSHING INSTALLATION FOR ACRYLIC DIFFUSER

Figure 2

Lightolier a Genlyte Thomas Companywww.lightolier.com
631 Airport Road, Fall River, MA 02720 (508) 679-8131 Fax (508) 674-4710
We reserve the right to change details of design, materials and finish.

LIGHTOLIER®

E. ELECTRICAL CONDUIT MOUNTING **(Fig. 3)**

1. Insert electrical conduit connector through CONDUIT PLATE (supplied) and secure with LOCK NUT (by others).
2. Pull supply wires through center hole in BACK PLATE. Align BACK PLATE and mark holes for DRYWALL ANCHORS (supplied), screw DRYWALL ANCHORS into wall.
3. Secure BACKPLATE to CONDUIT PLATE and DRYWALL ANCHORS with screws provided.
4. While supporting BALLAST HOUSING, Make electrical connections: Black lead or lead without tracer marks to hot (Black) supply lead; White lead or lead with tracer marks to neutral (White) supply lead. Uninsulated wire is a ground wire and must be connected to grounding terminal or ground lead. Use WIRE NUTS.
5. Carefully push connections back into the BALLAST HOUSING.
6. Align tabs at top of BALLAST HOUSING with slots on BACK PLATE, snap in and push housing flush with wall.

CAUTION: MAKE CERTAIN THAT NO WIRES ARE PINCHED BETWEEN BACK PLATE AND FIXTURE BODY.

7. Insert ALLEN HEAD SCREW (provided) into hole at bottom of BALLAST HOUSING and secure BALLAST HOUSING to BACK PLATE.

For DIFFUSER & FRONT COVER attachment proceed as per Sections B & C on first page of these instructions.

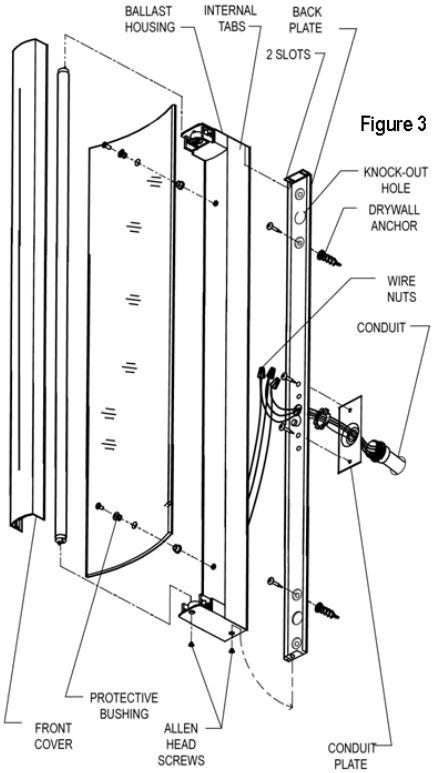

Figure 3

F. 2-FOOT SOLI ELECTRICAL CONDUIT MOUNTING
Note: 2 foot version cannot be wired through the center hole but must use one of the KNOCK OUT HOLES.
(Fig. 4)

1. Insert electrical conduit connector through CONDUIT PLATE (supplied) and secure with LOCK NUT (by others).
2. Select KNOCK-OUT HOLE on BACK PLATE. Pull supply wires through center hole in BACK PLATE. Align BACK PLATE and mark holes for DRYWALL ANCHORS (supplied), screw DRYWALL ANCHORS into wall. **Proceed as per items 3 through 7 above.**

For DIFFUSER & FRONT COVER attachment proceed as per Sections B & C on first page of these instructions.

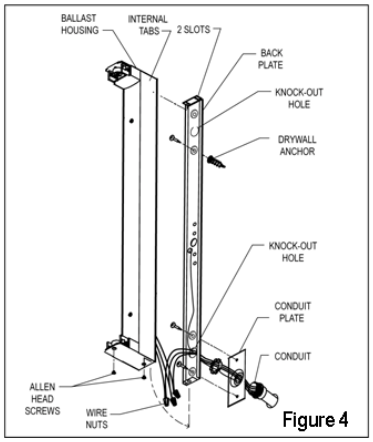

Figure 4

Lightolier a Genlyte Thomas Companywww.lightolier.com
631 Airport Road, Fall River, MA 02720 (508) 679-8131 Fax (508) 674-4710

LIGHTOLIER®

Architectural Decorative Soli™ 48022ALU

Wall/Ceiling Mounted T-5 Fluorescent ADA Compliant

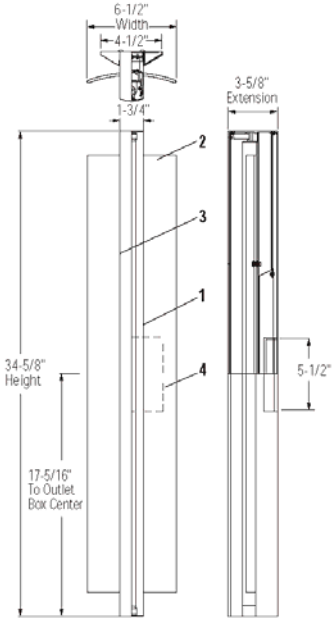

Note: Luminaire can be ordered with or without diffusing shield. Order each separately.
Can be mounted vertically or horizontally.

Fixture Ordering Information

Catalog No.	Finish	Wattage	Voltage	Lamping
48022ALU	Powder Coated	21W	120/277V	T-5 Miniature Bi-Pin Fluorescent
48022ALU39U	Metallic Aluminum	39W HO	120/277V	T-5 Miniature Bi-Pin Fluorescent

Diffuser Ordering Information

Catalog No.	Description	Dimensions
40875	Translucent Etched Soda Lime Glass w/ Pencil Polished Edges	31.25" L x 6.5" W x 5 mm Thick
40915	Extruded Opal Virgin Acrylic w/ Pencil Polished Edges	31.25" L x 6.5" W x 5 mm Thick

Features

1. **Housing:** Extruded and die-cast aluminum ballast and lamp chamber.
2. **Optional Diffuser/Reflector:** Curved etched glass or extruded opal virgin acrylic.
3. **Optics:** Internal white acrylic diffuser covers slit on front cover.
4. **J-Box Covers:** Die-cast split covers to enclose 4" octagonal J-Box (J-Box by others).

Mounting

Mounts directly to switch box or 4" octagonal J-Box. Octagonal box mounting requires use of "J-Box Covers" and "Support Plate" supplied standard.

Electrical

Ballast (Electronic 120/277V)	21 W	39W HO
Total Input Watts:	25W	39W
Max. Line Current:	120V = 0.21 277V = 0.10	120V = 0.34 277V = 0.15
Power Factor:	120V = 0.98 277V = 0.95	120V = 0.98 0.98 = (120V/277V)
Ballast Factor:	1.03	0.90
THD:	120V = <10% 277V = <15%	120V = <10% 277V = <10%
Starting Temp:	0°F / -18°C	0°F / -18°C

Finish

All painted parts utilized the powder coat process. Lightolier Metallic Aluminum Powder Coat Enamel.

Labels

cULus Listed. Suitable for Damp Locations.

Job Information **Type:**

Job Name:

Cat. No.:

Lamp(s):

Notes:

Lightolier a Genlyte company www.lightolier.com
631 Airport Road, Fall River, MA 02720 • (508) 679-8131 • Fax (508) 674-4710

LIGHTOLIER®

CERTIFIED TEST REPORT NO. 2219FR
COMPUTED BY LSI PROGRAM **TEST-LITE**
LIGHTOLIER ARCHITECTURAL DECORATIVE LUMINAIRE SOLI
CAT. NO. 48022ALU / 40875, ETCHED GLASS SHIELD
1-21W PHILIPS T-5 LAMP. LUMEN RATING = 1900 LMS.
UNIVERSAL BALLAST #B228PUNVC

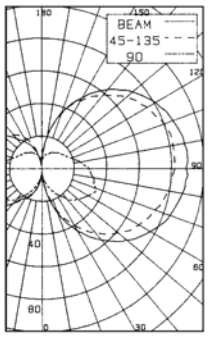

Prepared For:
Lightolier
Fall River, MA
Date: May 6, 2003

CANDLEPOWER

ZONE ➤ / DEG. ▼	90	67.5	45	22.5	90	
	CANDELAS					
0	2	2	2	2	2	
5	4	3	4	5	5	0
15	9	10	19	22	21	2
25	15	22	34	38	37	7
35	21	31	46	50	51	13
45	27	40	57	60	63	20
55	31	47	66	69	73	26
65	35	53	72	76	81	32
75	33	58	77	80	86	36
85	30	63	80	83	89	39
95	26	65	82	84	90	39
115	17	65	72	79	84	34
125	15	60	63	73	77	28
135	14	53	54	65	68	22
145	12	44	43	57	57	15
155	10	35	29	45	44	9
165	9	22	21	31	29	4
175	6	10	12	13	13	1
180	5	5	5	5	5	

Tested according to IES procedures.
Test distance exceeds five times the greatest luminous opening of luminaire.

COEFFICIENTS OF UTILIZATION
% EFFECTIVE CEILING CAVITY REFLECTANCE

ROOM CAVITY RATIO	80			70			50			30			10			0
	% WALL REFLECTION															
	50	30	10	50	30	10	50	30	10	50	30	10	50	30	10	0
0	31	31	31	28	28	28	24	24	24	20	20	20	16	16	16	14
1	24	23	21	22	21	19	18	17	16	15	14	13	12	11	10	9
2	20	18	16	19	17	15	15	14	12	12	11	10	9	8	7	6
3	17	15	13	16	14	12	13	11	10	10	9	8	8	7	6	4
4	15	12	10	14	11	9	11	9	8	9	7	6	7	5	4	3
5	13	11	8	12	10	8	10	8	6	8	6	5	6	5	4	3
6	12	9	7	11	8	7	9	7	5	7	5	4	5	4	3	2
7	10	8	6	10	7	6	8	6	5	6	5	4	5	3	3	2
8	9	7	5	9	6	5	7	5	4	6	4	3	4	3	2	1
9	9	6	5	8	6	4	6	5	3	5	4	3	4	3	2	1
10	8	5	4	7	5	4	6	4	3	5	3	2	4	2	2	1

DETERMINED IN ACCORDANCE WITH CURRENT IES PUBLISHED PROCEDURES
20% FLOOR CAVITY REFLECTANCE

Multiply Calculated footcandles by 1.6 for 39W HO Lamp.

DISTRIBUTION

Zone	Lumens	% Lamp	% Luminaire
0-30	15	.82	2.87
0-40	35	1.87	6.56
0-60	106	5.59	19.61
0-90	267	14.07	49.31
40-90	231	12.20	42.75
60-90	161	8.47	29.70
90-180	274	14.46	50.69
0-180	542	28.53	100.00

** EFFICIENCY = 28.5% **

LIGHTOLIER®

Job Information **Type:**

Lightolier a Genlyte company www.lightolier.com
631 Airport Road, Fall River, MA 02720 • (508) 679-8131 • Fax (508) 674-4710
We reserve the right to change details of design, materials and finish.

D. Bed light (bulb)

SILHOUETTE™ Series 2'–5' T5 Fluorescent Lamps

Ultra-slim design with extraordinary light output

Photo: Courtesy of Lazzlo Regos

Ideal for general, decorative and architectural lighting in offices, retail stores, hotels, schools and hospitals

Slim Profile Lamp and Ballast
- Improved optical control
- Fixtures can be 40% smaller than T8 systems

Optimized Lamp Lengths
- Design flexibility for cove and cabinet lighting
- Better fit in 2 x 2 and 2 x 4 grid ceilings

Improved Phosphors
- Up to 104 lumens per watt
- 95% lumen maintenance
- 85 CRI in 3000, 3500 and 4100K

Operates on Programmed Start Electronic Ballasts
- High system efficacy
- Fail-safe operation at end of life

Variety of Sizes and Color Temperatures

PHILIPS

Philips Lighting Company
200 Franklin Square Drive
P.O. Box 6800
Somerset, NJ 08875-6800
1-800-555-0050
A Division of Philips Electronics North America Corporation

www.philips.com

Philips Lighting
281 Hillmount Road
Markham, Ontario
Canada L6C 2S3
1-800-555-0050
A Division of Philips Electronics Ltd.

Updated 7/04 P-5123-C

SILHOUETTE™ Series 2'–5' T5 Fluorescent Lamps

Electrical, Technical and Ordering Data (Subject to change without notice)

Product Number	Description	Nominal Watts	Bulb	Base	Std. Pkg. Qty.	Color Temp. (K)	Color Rendering (CRI)	Avg. Nominal Length (In.)	Rated Life (Hrs.)(1)	Initial Lumens	Design Lumens(2)
23077-1	F14T5/830	14	T5	Min. Bipin	40	3000	85	22	20,000	1350	1275
23079-7	F14T5/835	14	T5	Min. Bipin	40	3500	85	22	20,000	1350	1275
23080-5	F14T5/841	14	T5	Min. Bipin	40	4100	85	22	20,000	1350	1275
23081-3	F21T5/830	21	T5	Min. Bipin	40	3000	85	34	20,000	2100	2000
23082-1	F21T5/835	21	T5	Min. Bipin	40	3500	85	34	20,000	2100	2000
23083-9	F21T5/841	21	T5	Min. Bipin	40	4100	85	34	20,000	2100	2000
23084-7	F28T5/830	28	T5	Min. Bipin	40	3000	85	46	20,000	2900	2750
23085-4	F28T5/835	28	T5	Min. Bipin	40	3500	85	46	20,000	2900	2750
23086-2	F28T5/841	28	T5	Min. Bipin	40	4100	85	46	20,000	2900	2750
23088-8	F35T5/830	35	T5	Min. Bipin	40	3000	85	58	20,000	3650	3450
23091-2	F35T5/835	35	T5	Min. Bipin	40	3500	85	58	20,000	3650	3450
23095-3	F35T5/841	35	T5	Min. Bipin	40	4100	85	58	20,000	3650	3450

(1) Average rated life under specified test conditions with lamps turned off and restarted once every 3 operating hours.
(2) Approximate lumens at 40% of rated average life (8000 Hours).

Spectral Power Distribution

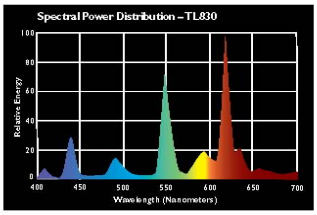

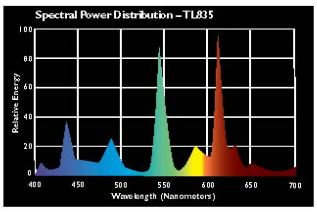

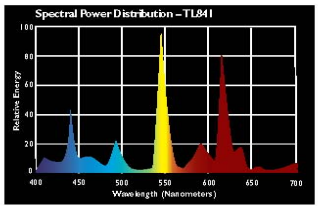

Lamp Dimensions

Lamp Type	A MAX.		B MIN.		B MAX.		C MAX.	
	inches	mm	inches	mm	inches	mm	inches	mm
F14T5	21.61	549.0	21.80	553.7	21.89	556.1	22.17	563.2
F21T5	33.42	849.0	33.61	853.7	33.70	856.1	33.98	863.2
F28T5	45.24	1149.0	45.42	1153.7	45.52	1156.1	45.80	1163.2
F35T5	57.05	1449.0	57.23	1453.7	57.33	1456.1	57.61	1463.2

Silhouette Lamp Specification

Lamps shall be Philips Silhouette T5 lamps having:

- Color rendering index of 85
- T5 diameter bulb
- Miniature bi-pin bases
- Color temperature of _____ (3000K, 3500K or 4100K)
- Initial lumens of _____ (1350, 2100, 2900 or 3650)
- Design lumens of _____(1275, 2000, 2750 or 3450)
- Nominal wattage of _____ (14, 21, 28, 35)
- Powered by electronic ballast designed for 170mA T5 lamps"

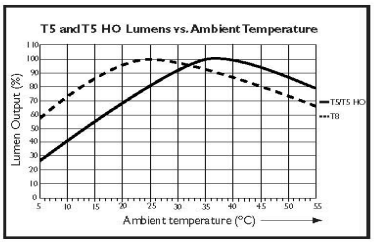

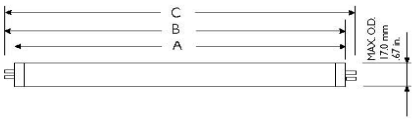

E. Bathroom mirror light (bulb)

Alice® 46531

Page 1 of 1

Fluorescent Bath Series

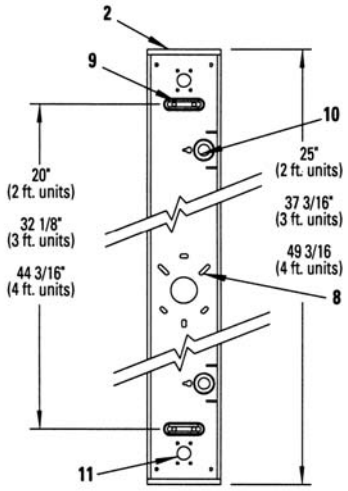

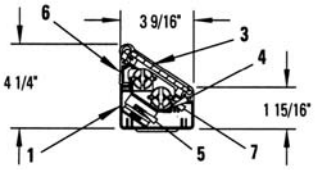

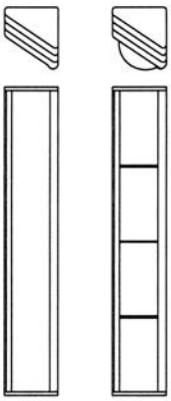

Ordering Information

Catalog Number		Nominal Length	Lamp	Ballast	Finishes
Bullnose	**Opal Diffuser**				
46824PB	**46821PB**	2 ft.	(2) 17W T8	Universal Electronic 120/277V	Polished Brass (PB)
46534PB	**46531PB**	3 ft.	(1) 25W T8	Universal Electronic 120/277V	*For Polished Chrome Finish use
46834PB	**46831PB**	3 ft.	(2) 25W T8	Universal Electronic 120/277V	suffix "PC" after catalog number
46844PB	**46841PB**	4 ft.	(2) 32W T8	Universal Electronic 120/277V	instead of "PB".

Features

1. **Housing:** Die-formed 22 gauge prefinished steel.
2. **End Cap:** (2) Die-cast zinc alloy.
3. **Diffuser Assembly:** Extruded aluminum side rails with die cast zinc alloy end covers. Silicone rubber gasket provided to eliminate light leaks. Stainless steel spring clips provide easy access for relamping. See chart for diffuser options.
4. **Reflector:** Die formed 22 gauge steel, Reflective white finish.
5. **Ballast:** Universal Electronic, high power factor.
6. **Side Diffuser:** Extruded UV stabilized acrylic.
7. **Lamp:** 17W, 25W, or 32W T-8 triphosphor fluorescent (medium bi-pin base).(by others)
8. **Mounting:** Center knock-out pattern for direct mounting to 3: or 4" octagonal Gem outlet boxes.
9. **Auxiliary Mounting:** Provided for direct mounting to wall surface.
10. **Wiring Kit Connection Detail:** For use with Lightolier Wall Wiring Kit - Catalog Number 46700.
11. **In-Line Connection Detail:** Provided for Installations where fixtures are to be mounted end to end. Linear connection and hardware provided with each fixture.

Electrical

Fluorescent:	1-Light 25W		2-Light 17W		2-Light 25W		2-Light 32W	
Ballast: Electronic	120	277	120	277	120	277	120	277
Total Input Watts	16	17	29	30	43	43	57	56
Max. Line Current (amps)	14	.07	.24	.11	.36	.16	.48	.21
Power Factor	>.97	>.97	>.97	>.97	>.97	>.97	>.97	>.97
Ballast Factor	.87	.87	.87	.87	.87	.87	.87	.87
THD	<10%	<10%	<10%	<10%	<10%	<10%	<10%	<10%
Min. Starting Temps.	-18°C (-0°F)	-18°C (-0°F)	-18°C (-0°F)	-18°C (-0°F)	-18°C (-0°F)	-18°C (-0°F)	-18°C (-0°F)	-18°C (-0°F)

Mounting

Horizontal or Vertical wall mount only.

Labels

UL listed suitable for damp locations.

Job Information **Type:**

Job Name:

Cat. No.:

Lamp(s):

Notes:

Lightolier a Genlyte Thomas Company www.lightolier.com
631 Airport Road, Fall River, MA 02720 • (508) 679-8131 • Fax (508) 674-4710

LIGHTOLIER®

READ AND UNDERSTAND THESE INSTRUCTIONS BEFORE INSTALLING FIXTURE

This fixture is intended for installation in accordance with the National Electrical Code and local regulations. To assure full compliance with local codes and regulations, check with your local electrical inspector before installation. To prevent electrical shock, turn off electricity at fuse box before proceeding.

Retain these instructions for maintenance reference.

INSTRUCTION SHEET NO.

IS:46531

0198 **Page 1 of 3**

INSTALLATION OF ALICE BATH LIGHTING SERIES

UNPACKING FIXTURE:

- Carefully unpack FIXTURE HOUSING, DIFFUSER DOOR and PARTS BAG from carton.
- Gently remove protective plastic film from outside of FIXTURE HOUSING and any protective paper or plastic film from DIFFUSER DOOR and discard.

FIXTURE INSTALLATION:

The Alice Bath Series can be installed in a variety of ways:

- Directly to standard electrical outlet boxes.
- End to end (continuous runs), using Linear Adapter Kit provided with fixture.
- Using Wall Wiring Mounting Kit (Lightolier Cat. No. 46700) for outlet boxes installed above existing mirrors.

WARNING: (RISK OF FIRE) FOR SUPPLY CONNECTIONS USE WIRE RATED MINIMUM 90°C. MOST DWELLINGS BUILT BEFORE 1985 HAVE SUPPLY WIRE RATED 60°C. CONSULT A QUALIFIED ELECTRICIAN BEFORE INSTALLATION.

INSTALLATION TO STANDARD OUTLET BOXES:

1. Remove two REFLECTOR MOUNTING SCREWS and gently lift REFLECTOR from FIXTURE HOUSING to expose wiring. (Fig. 1)
2. Remove round center KNOCK-OUT HOLE in FIXTURE HOUSING and snap PLASTIC BUSHING into opening. (Fig. 1 & Fig. 2)
3. Remove the appropriate slotted KNOCK-OUTS in FIXTURE HOUSING to match the outlet box mounting holes.
4. Carefully pull supply wires from outlet box through CENTER KNOCK-OUT HOLE and mount FIXTURE HOUSING to outlet box using outlet box screws (provided with outlet box).

   Note: In addition to outlet box mounting, it is also recommended to use AUXILIARY MOUNTING HOLES at each end of FIXTURE HOUSING. (Fig. 1) Use appropriate mounting hardware for the wall surface (i.e.: wood screws, toggle bolts, molly screws, etc.).
5. Make electrical connections: black fixture lead or fixture lead without tracer mark to black (hot) supply lead; white fixture lead or fixture lead with tracer mark to white (neutral) supply lead. Green fixture wire is a ground wire and must be connected to a ground screw or ground lead within outlet box. Use wire nuts (local hardware item) to make connections. Carefully push all wire connections through center opening making certain all connections are inside of outlet box.
6. Re-install REFLECTOR ASSEMBLY by placing two TABS on REFLECTOR into SLOTS in FIXTURE HOUSING and pivot REFLECTOR back until HOLES in REFLECTOR ASSEMBLY aligns with HOLES in FIXTURE HOUSING. Secure REFLECTOR ASSEMBLY in position by re-installing two REFLECTOR MOUNTING SCREWS.

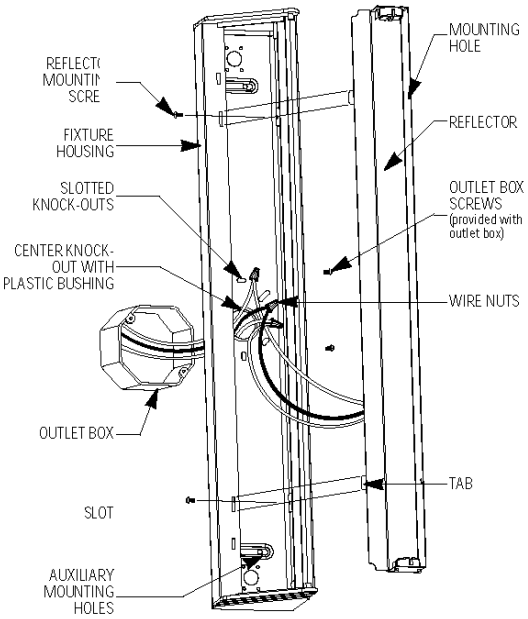

Fig. 1

END TO END (CONTINUOUS RUNS) INSTALLATION:

1. Remove two REFLECTOR MOUNTING SCREWS and gently lift REFLECTOR from FIXTURE HOUSING to expose wiring. (Fig. 1)
2. Remove round center KNOCK-OUT HOLE in FIXTURE HOUSING that will be mounted to outlet box/supply wires and snap PLASTIC BUSHING into opening. (Fig. 1)
3. Remove SMALL DIAMETER KNOCK-OUT in the end of FIXTURE HOUSING closest to the next adjoining FIXTURE HOUSING to be mounted and snap PLASTIC BUSHING into opening. (Fig. 2)

LIGHTOLIER®

LIGHTOLIER a GENLYTE company.

631 Airport Road, Fall River, MA 02720

READ AND UNDERSTAND THESE INSTRUCTIONS BEFORE INSTALLING FIXTURE

This fixture is intended for installation in accordance with the National Electrical Code and local regulations. To assure full compliance with local codes and regulations, check with your local electrical inspector before installation. To prevent electrical shock, turn off electricity at fuse box before proceeding.

Retain these instructions for maintenance reference.

INSTRUCTION SHEET NO.

IS:46531

0198 **Page 2 of 3**

4. Using the wire provided in parts bag; pass approximately half the length of each black, white and green wire through opening in back of FIXTURE HOUSING. (Fig. 2)
5. Position LINEAR ADAPTER COVER over back of FIXTURE HOUSING allowing two THREADED STUDS to pass through mounting holes surrounding KNOCK-OUT OPENING.
   Caution: Make certain not to pinch wires between FIXTURE HOUSING and LINEAR ADAPTER. Secure LINEAR ADAPTER in place by placing LOCK WASHERS and HEX NUTS (from front of fixture housing) over threaded STUDS and fully tighten.
6. Carefully pull supply wires from outlet box through center KNOCK-OUT HOLE and mount FIXTURE HOUSING to outlet box using outlet box screws (provided with outlet box).
   Note: In addition to outlet box mounting, it is also recommended to use AUXILIARY MOUNTING HOLES at each end of FIXTURE HOUSING. (Fig. 1) Use appropriate mounting hardware for the wall surface (i.e.: wood screws, toggle bolts, molly screws, etc.).
7. In second adjoining FIXTURE HOUSING, remove SMALL DIAMETER KNOCK-OUT in the end closest to first FIXTURE and snap PLASTIC BUSHING into opening.
8. Pass the other half of black, white and green wires through opening.
9. Position second FIXTURE HOUSING over end of LINEAR ADAPTER allowing MOUNTING STUDS on ADAPTER to pass through MOUNTING HOLES in back of FIXTURE HOUSING. Secure FIXTURE HOUSING to wall surface using appropriate mounting hardware for the wall surface (i.e.: wood screws, toggle bolts, molly screws, etc.).
   Note: If additional FIXTURES are to be installed; follow steps 3 through 5 prior to mounting second FIXTURE HOUSING.

   Secure LINEAR ADAPTER in place by placing LOCK WASHER and HEX NUT (from front of fixture housing) over threaded STUDS and fully tighten.
10. Make electrical connections: FIXTURE HOUSING containing supply wires (in coming power); connect black fixture lead and black wire from LINEAR ADAPTER to black (hot) supply lead; white fixture lead and white wire from LINEAR ADAPTER to white (neutral) supply lead. Green fixture wire and green LINEAR ADAPTER wire are ground wires and must be connected to a ground screw or ground lead within outlet box. Use wire nuts (local hardware item) to make connections. Carefully push all wire connections through center opening making certain all connections are inside of outlet box.
11. Using WIRE NUTS (provided with fixture) connect second fixtures black lead to black LINEAR ADAPTER lead; white fixture lead to white LINEAR ADAPTER lead; green fixture lead (ground) to green LINEAR ADAPTER lead. Repeat procedure if other fixtures are installed in continuous run.
12. Re-install REFLECTOR by placing two TABS on REFLECTOR into SLOTS in FIXTURE HOUSING and pivot REFLECTOR back until HOLES in REFLECTOR aligns with HOLES in FIXTURE HOUSING. Secure REFLECTOR in position by re-installing two REFLECTOR MOUNTING SCREWS. Repeat procedure for remaining FIXTURES in run.

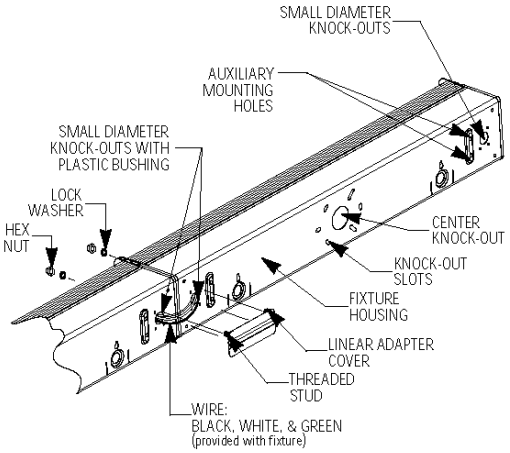

Fig. 2
BACK-VIEW OF FIXTURE HOUSING

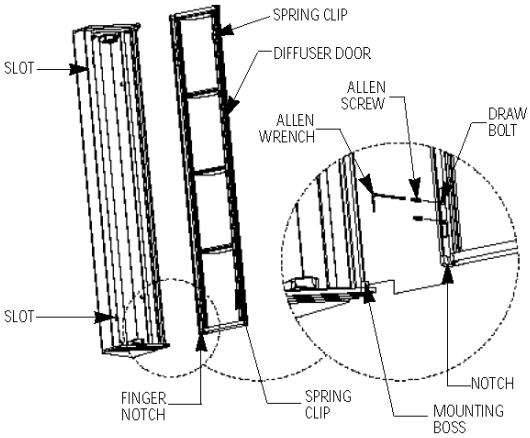

Fig. 3

LIGHTOLIER®

LIGHTOLIER a GENLYTE company.
631 Airport Road, Fall River, MA 02720

READ AND UNDERSTAND THESE INSTRUCTIONS BEFORE INSTALLING FIXTURE

This fixture is intended for installation in accordance with the National Electrical Code and local regulations. To assure full compliance with local codes and regulations, check with your local electrical inspector before installation. To prevent electrical shock, turn off electricity at fuse box before proceeding.

Retain these instructions for maintenance reference.

INSTRUCTION SHEET NO.

IS:46531

0198 **Page 3 of 3**

WALL WIRING KIT INSTALLATION:

Follow instructions provided with WALL WIRING KIT 46700. Keep these instructions for reference purposes.

DIFFUSER DOOR INSTALLATION:

1. Loosen two ALLEN SCREWS in each of the two DRAW BOLTS (use allen wrench provided). (Fig. 3)
2. Slide both DRAW BOLTS towards the center of DIFFUSER DOOR; hook the NOTCHES in each end of DIFFUSER DOOR around each MOUNTING BOSS on ends of FIXTURE HOUSING. Slide DRAW BOLTS to ends of DIFFUSER DOOR making certain DRAW BOLTS fully engage over each MOUNTING BOSS. Secure DRAW BOLTS in position by tightening all four ALLEN SCREWS.
3. Swing DIFFUSER DOOR closed against FIXTURE HOUSING allowing two SPRING CLIPS to engage in SLOTS in FIXTURE HOUSING. Gently push DIFFUSER DOOR at each end until SPRING CLIPS fully snap into FIXTURE HOUSING.

   Note: To open DIFFUSER DOOR for relamping; place finger into FINGER NOTCHES in each end of DIFFUSER DOOR and gently pull DIFFUSER DOOR away from front edge of FIXTURE HOUSING. (Fig. 3)

CAUTION: Maximum wattage as marked on fixture must not be exceeded.

LAMPING FIXTURE:

FLUORESCENT FIXTURES:

- Position pins in each end of lamp straight into SLOT in each SOCKET and twist lamp counterclockwise until lamp snaps into position (twist lamp approximately 90°). (Fig. 4)

CAUTION:

- **DISCONNECT POWER TO FIXTURE BEFORE RELAMPING.**
- **DO NOT USE 12V LAMPS WITH THIS FIXTURE.**
- **DO NOT TOUCH LAMP WITH BARE HANDS.**
  Oils from hands could reduce LAMP life. Use tissue paper or cloth when inserting LAMP into SOCKET.
- **DO NOT OPERATE FIXTURE WITH DIFFUSER DOOR OPEN.**

INCANDESCENT (HALOGEN) FIXTURES:

- Insert LAMP BASE into RECTANGULAR OPENING in PIN-PROTECTOR aligning PINS of LAMP with HOLES in SOCKET. Gently push LAMP into SOCKET until LAMP is fully seated into SOCKET.

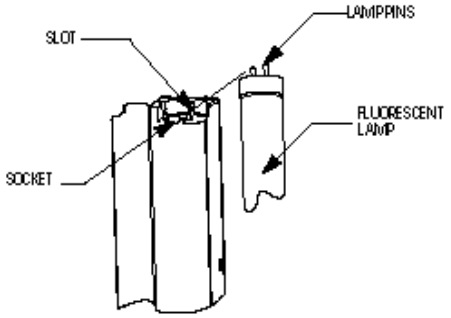

Fig. 4
FLUORESCENT FIXTURES

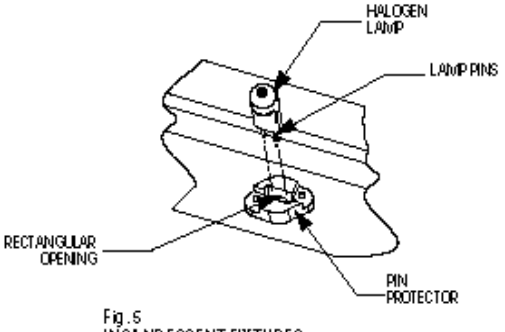

Fig. 5
INCANDESCENT FIXTURES

LIGHTOLIER a GENLYTE company.
631 Airport Road, Fall River, MA 02720

F. Trellis LED light

Features:

- Individual modular units
- Easily cut to length in shop or on job site
- Available in red, red-orange, white & yellow
- UL approved file # E303143
- Available with 4 to 6 modules per foot
- ½ Watt system in white & yellow
- Customized pre-mounted panels available
- Field installation friendly
- Wide angle of light
- UL listed and CE certified power supply
- ISO 9001 certified manufacturing process
- Low Voltage: 6 - 12 volts

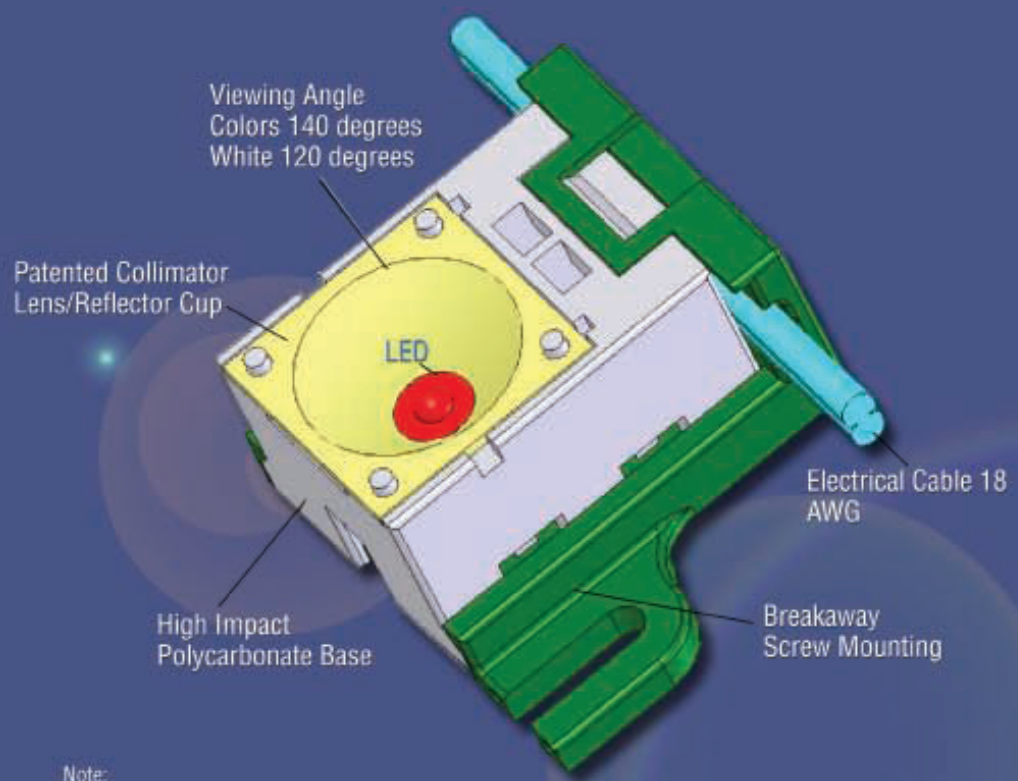

Note:
(1) Protective Conformal coating in acrylic base seals off the PCB and its components completely.
(2) Displacement type insulation with crimping on module.
(3) Dimensions of each Module with breakaway screw mounting: 1.50" x 1.34" x 0.67".

BOREALIS LED Lighting Systems

Innovating for Tomorrow

Energy Saving Comparison

Lighting Source	Neon	Modular Lighting System
Number/Type of Transformers	(1) / 9000v	(1) / 100w
Total Amps	2.250*	0.779
Input Voltage	120	120
Watts/Hour	270	93.48
Op Cost $0.10/KWH	0.0270	0.0093
Hours	14	14
Days	30	30
Average Cost Per Month	$11.34	$3.93

Monthly Energy Savings	$7.41
Annual Energy Savings	$88.92
Annual Energy Savings %	65.34%

Annual Cost Neon	
Energy Consumption	$136.08
Maintenance	$250.00
Total	$386.08
Annual Cost Borealis System	
Energy Consumption	$47.16
Maintenance	$0.00
Total	$47.16
Total Annual Savings ($)	
Energy Consumption	$88.92
Maintenance	$250.00
Total	$338.92
	87.8%

* Data from IPC Energy Managers

Note: Estimated Payback Period less than 24 months

Comparison based on Six - 36" High Letters

BOREALIS LIGHTING

by PolyBrite International, Inc.

1751 W. Diehl Road, Suite 110, Naperville, IL 60563

Toll Free: 1.800.320.3801 Phone: 630.717.6700 • Fax: 630.717.5646

Modular Lighting System

Product Specification Sheet

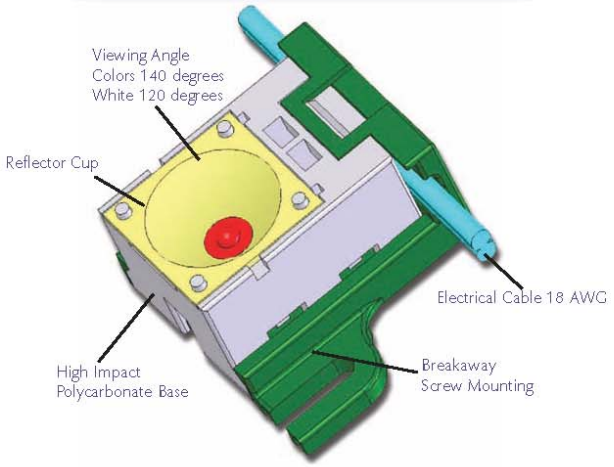

Note: (1) Protective Conformal coating in acrylic base seals off the PCB and its components completely.
(2) Displacement type insulation with crimping on module.
(3) Dimensions of each Module with breakaway screw mounting: 1.50" x 1.34" x 0.67".

	RED & RED/ORANGE	WHITE & LEMON YELLOW
OPERATING VOLTAGE	6	12
OPERATING CURRENT (mA)	60	60
MAXIMUM CURRENT (mA)	70	70
MINIMUM CURRENT (mA)	50	50
MODULES PER FOOT	5	4
LEDs PER MODULE	1	1
LEDs PER FOOT	5	4
WATTS PER FOOT	1.44 – 2.16	2.44
WATTS PER MODULE	0.36	0.61
OPERATING TEMPERATURE - HIGH	167°F, 75°C	167°F, 75°C
OPERATING TEMPERATURE - LOW	– 40°F, – 40°C	– 40°F, – 40°C
WARRANTY - LEDs	72 Months	60 Months
WARRANTY - POWER SUPPLY	36 Months	60 Months
UL RECOGNIZED	YES	YES
UL CLASSIFIED	E303143	E303143
CSA APPROVED	YES	YES
REEL LENGTHS (feet)	25	20
REEL LENGTHS (meters)	7.6	6.1

Note: Custom LED colors including Amber, Blue, Cyan and Green are available upon request.
White 1/2 Watt system.

February 2007

26 56 00 EXTERIOR LIGHTING

26 56 23 Area Lighting

The following lighting fixture schedule shows the exterior lights on the deck, in the trellis and on the roof. Manufacturing specifications and installation instruction are also included in this section. The specifications of trellis lights are shown in section 26 51 13 (interior lighting).

No.	NAME	LOCATION	QUAN-TITY	LAMP	WATT-AGE	PRODUCT	MANUFAC-TURER	CATALOGUE NUMBER	FINISH COLOR
F	LED trellis	in trellis tube (outdoor part, 6/tube x 12 tubes)	72		0.5	Modular lighting system	Borealis		light color (lemon)
G	Deck Light	on south elevation	6			Indoor/ourdoor wall, lumiquad rectangle	Lightolier	6580	White, Lexan
G	Deck Light bulb	on south elevation	6	2-Pin Twin CF	13	Philips PL-C Cluster 2-Pin Base	Philips	383141 to 383240	
H	Roof Light (Self-powered)	on the roof, beneath the panel (2 light per module)	TBD			Integral Solar Spotlight - 3 Pack	SolarLight Store	IMC 044	

Please note that quantities of self-powered lights will be determined based on their watt-hour capacity.

G. Deck light

INSTRUCTION SHEET NO.

IS:6580

R1285

INSTRUCTIONS FOR ASSEMBLING AND INSTALLING FIXTURE

READ AND UNDERSTAND THESE INSTRUCTIONS BEFORE INSTALLING FIXTURE.
This fixture is intended for installation in accordance with the National Electrical Code and local or federal code specifications. To prevent electrical shock, turn off electricity at fuse box before proceeding.
Retain these instructions for maintenance reference.

CAUTION: FOR WET LOCATIONS, IN ACCORDANCE WITH UNDERWRITERS LABORATORIES REQUIREMENTS, A LINE OF CAULKING COMPOUND SUCH AS ACRYLIC LATEX OR BUTYL *MUST* BE PLACED AROUND THE BACK OF THE FIXTURE, APPROXIMATELY ½" FROM THE EDGES, IN ORDER TO SEAL WATER AWAY FROM THE OUTLET BOX AND BACK OPENINGS.

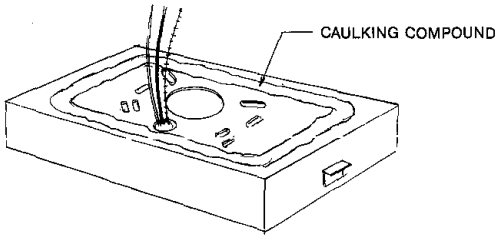

FIG. 1

1. Disassemble fixture by removing LATCH SCREW visible at side. HOUSING "hinges" down for removal. See Fig. 3. **NOTE:** A #10 allen wrench (not provided) is required for 6580 and 6581.
2. Remove appropriate knockouts.
3. Make connections: Black fixture lead or fixture lead without tracer mark to black supply lead; white fixture lead or fixture lead with tracer mark to white supply lead. Attach bare GROUND WIRE to outlet box grounding screw (or to other system ground). Use WIRE NUTS (local hardware item). Place connections in OUTLET BOX. See Fig. 2.
4. Secure FIXTURE BODY to OUTLET BOX with OUTLET BOX SCREWS provided in OUTLET BOX.
5. Mount diffuser HOUSING to FIXTURE BODY by tilting HOUSING to engage lug with projection of FIXTURE BODY. Swing HOUSING into position, seating against GASKET. See Fig. 3.
6. Press HOUSING into alignment against GASKET and secure with LATCH SCREW. See Fig. 3. **NOTE:** Mount with LATCH SCREW down in wall mounting.

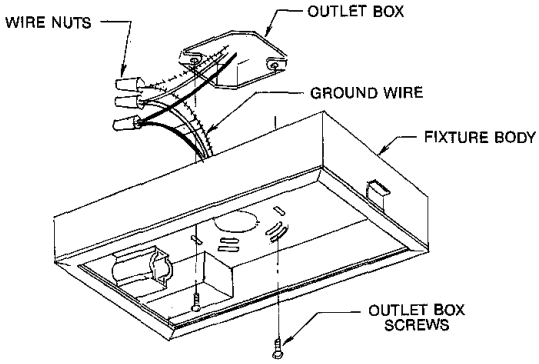

FIG. 2

CAUTION: WATTAGE AS MARKED ON FIXTURE MUST BE USED. MINIMUM STARTING TEMPERATURE OF BALLAST IS RATED AT 32°.

LAMPS-Use: PL by Philips
TT by Sylvania
Dulux® by Osram
Moduline by General Electric

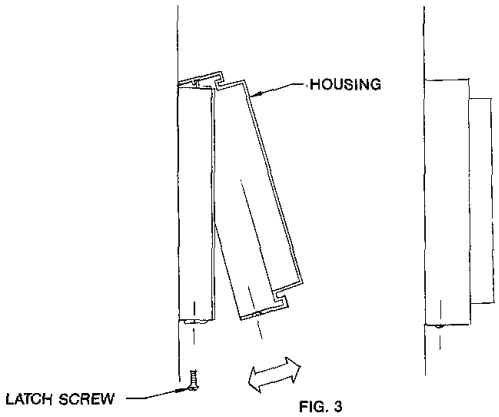

FIG. 3

LIGHTOLIER® SECAUCUS, NEW JERSEY, 07094-0508
MONTREAL, QUEBEC, CANADA

H. Self-powered roof light

Home > Solar Spot Lights

Larger View Alternate View

Integral Solar Spotlight - 3 Pack

Item IMC044
List Price: $129.99
Sale Price: $59.98 (54% off)

Three-light solar set with LED lighting

- One day of solar charging powers three LED bulbs
- Spotlights last for up to 10 hours
- Include an automatic on/off sensor
- Saves you money on your electric bill
- Comes complete with ground stakes, bulbs, and a 20-foot cord

View Complete Product Details

Product Rating
(22 ratings) Write a Review Read 22 Reviews

Today's Shipping Special: $7.99 (Offer only in Contiguous USA)
This product only ships in the Contiguous USA.
Usually ships within 2 business days.

Check Arrival Date & Shipping Cost »

Availability: In Stock **Add to Shopping Cart**

1 Quantity

Email Page Print Page Compare Item

Product Details
What We Like About the Integral Solar Spotlight

Highlight the best features of your garden or yard with this Solar Spotlight Set. After a day's solar charging, its long-life, rechargeable batteries power three white LEDs, which emit a bright, white light to accentuate your plants or outdoor decor for 8 to 10 hours.

These lights feature a durable polymer construction in an attractive black finish. The three spot lights are connected to an integral solar panel that charges all three lights. They also have an automatic on/off sensor so you don't have to bother with elaborate timers. This set of hassle-free, energy-efficient lights will also save you a considerable amount on your monthly electricity bills.

What is an LED? Click on the icon below for lighting tips and a LED Lighting Guide.

LED Lighting Guide

Dimensions:	**3.5L x 3.5W x 7H inches**
Material:	**Plastic**
Cord Length:	**20 Feet - each**
Finish:	**Black**
Brand Name:	**Malibu**
Light:	**White**
Specialty:	**Flood Lights**
Illumination Time:	**8 - 10 Hours**
# of LEDs:	**3 per Light**

Product Information

- Product Guarantee
- Return and Exchange Policy

26 56 26 Landscape Lighting

The following lighting fixture schedule shows the landscape light, which is installed in the planter boxes. Manufacturing specifications and installation instruction are also included in this section.

No.	NAME	LOCATION	QUA-NTITY	LAMP	WATT-AGE	PRODUCT	MANUFA-CTURER	CATALOGUE NUMBER	FINISH COLOR
I	Landscape Light (Self-powered)	Inside the planter boxes pathway	TBD			Laurel In-Ground Solar Light	SolarLight Store	SCL012	

Please note that quantities of self-powered lights will be determined based on their watt-hour capacity.

I. Self-powered landscape light

Home > Solar Landscape Lights > All Solar Landscape Lights

Larger View

Laurel In-Ground Solar Light

Item SCL012
List Price: $79.99
Our Price: $49.99

- Durable stainless steel shaft and modern tubular lamp
- Creates hours of bright illumination
- Solar energy saves both money and natural resources
- Interior beads disperse sparkling light

View Complete Product Details

FREE Ground Shipping Today! (Offer only in Contiguous USA)
This product only ships in the Contiguous USA.
Usually ships within 5 business days.

Check Arrival Date & Shipping Cost »

Availability: In Stock

Add to Shopping Cart

1 Quantity

Email Page Print Page Compare Item

Product Details

Bring a contemporary style to your pathway or garden with the Laurel In-Ground Solar Light. Powered by the energy of the sun, this light has a modern stainless steel shaft and a sleek tubular lamp. Bubble-like beads within the lamp disperse the light and provide a sparkling effect that makes this light a true delight.

The solar panels of this light allow for hours of maintenance-free use. They recharge during the daylight while emitting a welcoming glow in the evening.

Dimensions:	**5L x 5W x 32H inches**
Material:	**Metal**
Finish:	**Silver**
Light:	**White**
Illumination Time:	**8-10 Hours**
# of LEDs:	**2 per Light**

Product Information

- Product Guarantee
- Return and Exchange Policy

26 56 33 Walkway Lighting

The following lighting fixture schedule shows the exterior lights along the ramp and entrance walkway. Manufacturing specifications and installation instruction of the ramp light are included in this section. See section 26 56 26 (Landscape Lighting) for specification of the walkway light.

No.	NAME	LOCATION	QUAN-TITY	LAMP	WATT-AGE	PRODUCT	MANUFACT-URER	CATALOGUE NUMBER	FINISH COLOR
J	Ramp Light (Self-powered)	on railings	TBD			Lighthouse Solar Post Light	SolarLight Store	UA 021	
I	Walkway Light (Self-powered)	Along the entrance pathway	TBD			Laurel In-Ground Solar Light	SolarLight Store	SCL012	

Please note that quantities of self-powered lights will be determined based on their watt-hour capacity.

J. Self-power ramp light

Home > Solar Post Lights > All Solar Post Lights

Larger View Alternate View

Lighthouse Solar Post Light

Item UA021
List price: $89.99 to $119.99
Our Price: $69.99 to $89.99
Price varies based on options selected.

- Automatically turns on at dusk and off at dawn
- Creates soothing light for 8 to 10 hours
- Stainless steel construction
- LED bulb is bright and never needs to be replaced
- No-wire installation
- Available in two sizes

View Complete Product Details

FREE Ground Shipping Today! (Offer only in Contiguous USA)
This product only ships in the Contiguous USA.
Usually ships within 5 business days.

Check Arrival Date & Shipping Cost »

Availability: In Stock

Add to Shopping Cart

Please Select Your Style

Select Style

1 Quantity

Product Details

The Lighthouse Solar Post Light is a great way to provide soft light for your yard or deck at night. Lasting around eight hours from a single day's charge, it turns on automatically when the sun goes down. You will never have to remember to turn the outside lights on or off again. The main light is supported by three small stainless steel posts, giving this lamp its distinctive lighthouse look. Available in a tall post for yards or a short post for decks and patios, you can match this light to your needs with ease.

This stainless steel light has a solar cell that converts sunlight into electricity. This electricity is used to recharge a built-in Ni-Cad battery each day. A photo-cell sensor automatically turns on the light at night. The light will use all available energy from the battery each night. Operating times vary by specific location and daily weather. The white LED bulb is incredibly bright and will never need to be replaced. There are no wires to install, allowing easy placement anywhere on your lawn. Made with real stainless steel, this solar light will make a beautiful addition to any home.

SIZE DIMENSIONS

- **Deck Post Light** 5.75L x 5.75W x 8.75H inches
- **Tower Light** 5.75L x 5.75W x 31.50H inches

What is an LED? Click on the icon below for lighting tips, and a LED Lighting Guide.

LED Lighting Guide

Dimensions:	**5.75L x 5.75W x 31.5H inches , 5.75L x 5.75W x 9H inches**
Material:	**Metal**
Finish:	**Silver**
Light:	**White**
# of LEDs:	**1 per Light**

Product Information

- Return and Exchange Policy

27 00 00 COMMUNICATIONS

27 01 00 OPERATION AND MAINTENANCE OF COMMUNICATIONS SYSTEMS

Operation and maintenance of the communications systems will be easy for the residents of the house. All of the devices selected come with an in-depth user's manual along with technical support via online use or telephone.

27 01 20 Operation and Maintenance of Data Communications

For desktop support contact Dell™ at 1-888-236-3355. This service is open 24 hours a day, 7 days a week. For other options, please refer to http://support.dell.com/support/ .

27 01 30 Operation and Maintenance of Voice Communications

For re-installation of the Skype™ Telephone, see the instructions below or refer to the following link

http://www.linksys.com/servlet/Satellite?c=L_Product_C2&childpagename=US%2FLayout&cid=1153780876066&pagename=Linksys%2FCommon%2FVisitorWrapper&lid=7606639789B70

For product installation and user guide, refer to the following page.

LINKSYS®
A Division of Cisco Systems, Inc.

Package Contents

- Handset
- 2 NiMH Batteries
- Charger with Power Adapter
- USB Base Station with USB Cable
- Power Adapter
- RJ-11 Cable (US and UK only)
- Quick Installation
- Setup Wizard CD with Skype Software

Dual-Mode
Internet Telephony Kit
Quick Installation

VoIP Voice

Model No. CIT300

CISCO SYSTEMS

1 Installing the Telephony Kit

A To begin, insert the Setup Wizard CD-ROM into the CD-ROM drive of your PC. The Setup Wizard should run automatically, and the Welcome screen should appear. If it does not, click Start. Click Run. In the field provided, enter D:\SetupWizard.exe (if "D" is the letter of your CD-ROM drive).

B Select your preferred language. Then click Next.

C Click Click Here to Start.

D After reading the License Agreement, click I accept the agreement. Then click Next.

B

C

D

E Connect the USB cable of the USB base station to a USB port on your PC.

Connect the included power adapter to the power port of the USB base station. Plug the power adapter into an electrical outlet.

If you have a landline, connect a RJ-11 telephone cable (included) to the LINE port of the USB base station. Then connect the other end to your telephone wall jack.

Click Next.

F Remove the cover of the battery compartment.

Insert the two NiMH rechargeable, AAA batteries (included).

Slide the cover upward until it snaps into place.

Place the handset on the charger.

Plug the charger's power adapter into an electrical outlet.

Click Next.

E

F

NOTE: For the initial charge, allow the batteries to charge for at least 14 hours.

G The following screen displays the various keys of the handset. Click Next.

H Before you use the Telephony Kit, make sure you have the following:

- high-speed Internet connection
- Skype application already installed on your PC (also included on the CD)
- Skype account (you can sign up for a Skype account after you have installed the Skype application)
- fully charged handset

Click Next.

I Click Check Audio.

G

H

I

Below are simple tasks that can be performed on the Skype Phone. These directions are directly taken from user's manual for the telephone.

Making Skype Calls

Calling a Landline Number with SkypeOut
SkypeOut calls require SkypeOut credits. To purchase these credits, go to www.skype.com.
1. Dial the landline number you want to call.
2. Press the skype key.

Calling a Skype Contact
1. During standby mode, press the skype key, or press up or down on the navigation pad.
2. The Skype contact list will appear. An icon next to each contact indicates its online status. Use the navigation pad to select the contact you want. If you want to search by letter, use the handset's keypad to enter the first letter of the name you want. When a contact is highlighted, select PROFILE to view the contact's information, such as name, online status, language, birthday, gender, home number, office number, mobile number, address, and time.
3. After you have selected the appropriate contact, press the Call key.

NOTE: For SkypeOut calls, dial 00, 011 or + as a prefix followed by the country code, area code and phone number.
Example:
To call the number 905-555-6622 in North America, where the country code is "1", you can dial 0019055556622 or, 01119055556622 or, +19055556622.

NOTE: This is the contact list of the user who is currently logged into Skype on the PC.

Making a Second Skype Call
You can put your Skype call on hold and make a second Skype call, through your contact list or SkypeOut.
1. While on a Skype/SkypeOut call, press the Call key to access the other line.
2. You will hear a dial tone. To call another Skype contact, proceed to step 3. To call a landline number through SkypeOut, go to step 7.
3. Press the skype key, or press up or down on the navigation pad.
4. The Skype contact list will appear. Use the navigation pad to select the contact you want.
5. Select PROFILE.
6. Press the Dial key. Proceed to step 8.
7. Dial the landline number you want to call.
8. To toggle between the two calls, press the Call key.

Ending a Skype Call
Press the Power or End Call key, or place the handset on the charger.

Rejecting an Incoming Skype Call
Press the Power or End Call key, or place the handset on the charger.

Answering an Incoming Skype Call
When you receive a Skype call, the handset will ring the selected Skype melody (refer to the "Customizing the Handset" section), and the Skype Call in Progress icon will flash. The display screen will show the display name and Skype ID of the caller or the number of the call (if it is a SkypeIn call). To answer, press the Call key.

Answering a Second Incoming Skype Call

When there is a second incoming Skype call while you are on the first Skype call, you will hear a call waiting tone. To pick up the second incoming call, press the Call key. Your current Skype call will be put on hold. To toggle between the two calls, press the Call key.

27 01 40 Operation and Maintenance of Audio-Video Communications

For maintenance and technical support for the television, please contact Astar Electronics™ at:

Support Phone Number: 626-851-2528
Support Email: support@astarelectronics.com

The television remote needs 2 AA batteries to function.

27 20 00 DATA COMMUNICATIONS

27 22 00 DATA COMMUNICATIONS HARDWARE

27 22 23 Data Communications Desktops

The desktop computer will be a Dell Energy Smart Enable Optiplex 745 Small Form Factor. This computer helps in saving power along with providing all the capabilities required in the house. It includes an Intel® Core™ 2 Duo Processor with Windows® XP for an operating system. Memory consists of 512MB SDRAM and 160 GB of hard drive space for audio, video, and file storage. It is also equipped with a video card, sound card, speakers, DVD read and write, and a 17" monitor. Apart from the everyday uses, this computer will also be used for communication with voice over IP and data monitoring systems.

27 24 00 DATA COMMUNICATIONS PERIPHERAL DATA EQUIPMENT

27 24 23 Audio-Video Devices

The above computer is equipped with standard speakers that can be used for audio.

The video device is a power saving television and DVD combination. It is the ASTAR LTV-20SD 20" LCD TV with DVD Player. It comprises a 20" flat panel LCD. The power consumption on standby is less than 3W, and maximum power consumption is 66W. The total dimensions of the television DVD

combo are 24" x 18.75" x 7.25". A remote control is included in the television set, which will require 2 AA batteries.

27 30 00 VOICE COMMUNICATIONS

27 32 00 VOICE COMMUNICATIONS TELEPHONE SETS, FACSIMILES AND MODEMS

27 32 13 Telephone Sets

The telephone set will use Skype, which is a voice-over-IP service. The house will have an actual phone that will connect to the household computer. The phone is wireless and can be used anywhere inside the house as long as it is charged. The Linksys CIT300 Dual-Mode Internet Telephony Kit, which can support Skype, SkypeOut™, SkypeIn™ and Skype Voicemail™, will be used.

27 33 00 VOICE COMMUNICATIONS MESSAGING

27 33 16 Voice Mail and Auto Attendant

Skype Voicemail™, in conjunction with the Skype telephone, will provide voicemail.

28 00 00 ELECTRONIC SAFETY AND SECURITY

28 30 00 ELECTRONIC DETECTION AND ALARM

28 31 00 FIRE DETECTION AND ALARM

Section 4.1.2 of the 2007 Solar Decathlon Rules and Regulations only requires the house to be equipped with smoke alarms.

28 31 46 Smoke Detection Sensors

The three smoke alarms that will be used in the house and the battery box are as follows:

1. Kidde 120VAC Photoelectric Smoke Alarm, Model PE120E (datasheet on pages 315-316)
2. Kidde Wireless AC Powered Smoke Alarm, Model RF-SM-AC (datasheet on pages 317-318)
3. Kidde Wireless Battery Powered Smoke Alarm, Model RF-SM-DC (datasheet on pages 317-318)

The PE120E will be placed in the dining room, within 21 feet of the bedroom door, as per NFPA 72. Since it is also within 20 feet of cooking appliances, as per NFPA 72, it is of photoelectric type.

The RF-SM-AC will be hardwired to the PE120E and placed in the bedroom, more than 36 inches away from the bathroom door, as per NFPA 72.

The RF-SM-DC will be placed in the battery box. The RF-SM-DC and the RF-SM-AC are wirelessly connected. In other words, all the three smoke alarms are interconnected and will sound at the same time. The reason behind using the RF-SM-DC in the battery box is to avoid running wires from the house.

120VAC Photoelectric Smoke Alarm

• PE120E

Photoelectric Sensor
Advanced photoelectric sensor is especially effective in detecting smoldering fires

9V Battery Backup
Provides continuous protection even during power outages

Test Button
Tests unit's electronic circuitry, horn and battery function

Green LED
Indicates the presence of AC power

Red LED
Indicates that the smoke alarm is operating properly and alarm condition

Description

The Kidde PE120E is a 120VAC powered photoelectric smoke alarm with 9V battery back up. This advanced smoke alarm has the ability to function as a stand-alone unit or in an interconnected system. The Kidde PE120E includes a test button, quick-connect power harness and offers a 5-year limited warranty.

Consumer Benefits

The Kidde PE120E 120VAC, photoelectric smoke alarm provides the best protection against slow smoldering fires and other types of fires providing an early warning signal to you and your family in the event of a smoke or fire incident. The PE120E includes a 9V battery back up, providing continuous protection even during a power failure. This alarm includes a quick connect power harness making installation simple and easy.

Features and Benefits

- **Photoelectric Sensor** – Advanced photoelectric sensor is especially effective in detecting smoldering fires.
- **Battery Backup (9V Battery Included)** – Provides continuous protection even during power outages.
- **Test Button** – Tests unit's electronic circuitry, horn and battery function.
- **Quick Connect Power Harness** – Makes installation fast and easy.
- **Dust Cover** – Protects sensor during construction.
- **Battery Pull Tab** – Eliminates battery installation time and keeps battery fresh.
- **Red LED** – Indicates that the smoke alarm is operating properly and alarm condition.
- **Green LED** – Indicates the presence of AC power.

5 YEAR LIMITED WARRANTY

UL LISTED

Architectural and Engineering Specifications

The smoke alarm shall be Kidde Unit PE120E or approved equal. It shall be powered by a 120VAC, 60Hz, 80mA source along with a 9V battery back up. The unit shall incorporate a photoelectric sensor with nominal sensitivity of 2.06%/ft. The temperature operation range shall be between 40°F and 100°F (4°C and 38°C) and the humidity operation range shall be 5% - 95% relative humidity.

The smoke alarm can be installed on any standard single gang electrical box, up to a 4" octagon junction box. The electrical connection (to the alarm) shall be made with a plug-in connector. A maximum of 24 Kidde devices can be interconnected in a multiple station arrangement. The interconnect system must not exceed the NFPA (National Fire Protection Association) limit of 18 initiating devices, of which 12 can be smoke alarms. With 18 initiation devices (smoke, heat, CO, etc.), interconnected, it is still possible to interconnect 6 strobe lights and or relay modules. The unit shall provide optional tamper resistance that deters removal of the unit from the wall or ceiling.

The alarm shall include a test button that will electronically simulate the presence of smoke and cause the unit to go into alarm. This sequence tests the unit's electronics, battery and horn to ensure proper operation.

The unit shall include a piezoelectric horn that is rated at 85dB at 10 feet. The unit shall also include a low battery warning utilizing a brief alarm chirp every 30-40 seconds for a minimum of seven (7) days.

The unit shall incorporate one red LED to indicate the alarm's current status and mode of operation. The red LED will indicate one of two conditions:

Standby Condition: The red LED will flash every 30-40 seconds to indicate that the smoke alarm is operating properly.

Alarm Condition: When the alarm senses products of combustion and goes into alarm, the red LED will flash rapidly (one flash per second). The rapid flashing LED and pulsating alarm will continue until the air is cleared.

The unit shall incorporate one green LED to indicate the alarm's current status and mode of operation. The green LED will indicate one of two conditions:

Standby Condition: The green LED will be steady on, indication the presence of AC power.

Alarm Condition: The green LED of an alarm that senses smoke will flash to indicate the memory condition. The memory will remain activated until it is reset by pushing the test button.

The unit shall at a minimum meet the requirements of UL217, NFPA72, (chapter 11 2002 edition), The State of California Fire Marshall, NFPA 101 (One and two family dwellings) Federal Housing Authority (FHA), Housing and Urban Development (HUD). It shall also include a 5-year manufacture's limited warranty.

Installation of Smoke Alarm

The smoke alarm should be installed to comply with all local codes having jurisdiction in your area, Article 760 of the National Electric Code, and NFPA 72. Make certain all alarms are wired to a single, continuous (non-switched) power line, which is not protected by a ground fault interrupter. A maximum of 1000 ft. of wire can be used in the interconnect system. Use standard UL listed household wire (18 gauge or larger as required by local codes).

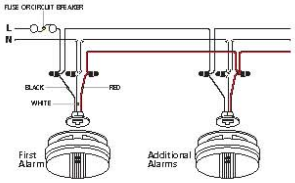

Technical Specifications

Unit Number:	PE120E
UPC:	0-25417-16512-8
Power Source:	120VAC
Sensor:	Photoelectric
Audio Alarm:	85dB at 10ft
Temperature Range:	40°F (4.4°C) to 100°F (37.8°C)
Humidity Range:	5%-95% relative humidity (RH)
Size:	5.6" in diameter x 1.55" depth
Weight:	1lb
Interconnects:	Up to 24 Kidde devices
LED:	Green, receiving ac power Red, alarm mode
Warranty:	5 year limited

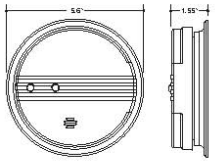

Ordering Information

Gift Box UPC: 0-25417-16512-8

Part Number	I 2 of 5	Pack Quantity	Dimensions (w x d x h inches)	Weight	Case/ Skid	Layers/ Skid	Skid Weight
PE120**	N/A	Individual	5.75 x 1.75 x 5.75	1lb	N/A	N/A	N/A
PE120E	200 25417 16512 2	Master Pack (12 units)	11.75 x 11.75 x 5.5	12lbs	84	7	756lbs

***Not for sale by individual unit*

Kidde

1394 South Third Street, Mebane NC 27302
1-800-880-6788 • www.kiddeus.com

Distributed by:

Kidde

wireless system

Provide Advanced Fire Protection with the Kidde Wireless System

Why Wireless?

- When one alam sounds they all do.
- More warning...in more places...means more time to escape.
- Install in minutes! Less cost, less hassle.
- Provide your family with advanced fire protection.

Wireless AC Powered Smoke Alarm

The Kidde Wireless AC Powered Smoke Alarm makes it easy to expand the coverage of a current interconnected system. Simply replace one interconnected smoke alarm with the Kidde Wireless AC powered alarm. You can then install Kidde Wireless Battery Powered Smoke Alarms in any additional rooms that need extra protection. The AC powered alarm bridges your home's current interconnected system to the newly installed alarms, so that when one alarm goes off, all alarms will sound.

Wireless Battery Powered Smoke Alarm

The Kidde Wireless Smoke Alarm enables families to quickly and easily install an interconnected smoke alarm system throughout their home without any messy wiring or labor. The battery-powered units are linked so that when one alarm sounds, it will trigger all to sound. In addition to providing protection to any room in your home, the Wireless Smoke Alarm also can be placed in a detached workshop or shed and linked into the home's system.

Smoke Sounder

The Kidde Wireless Smoke Sounder provides additional warning for those who may not wake to the sound of a traditional smoke alarm. It's loud talking voice announces "Danger! Fire! Wake Up! Follow the Escape Plan!", and is accompanied by a distinctive pitch that is designed to better wake children and older adults. Studies have shown that a vocal warning may be more successful at waking children than a traditional sounding smoke alarm. Lower frequency alerts may be more effective at waking children and those with high frequency hearing loss (most commonly brought on by aging). Smoke sounder is not to be used in place of a smoke alarm. *Device is not a UL certified accessory.

Item	Part Number	Pack Qty	UPC	I 2 of 5	Dimensions w x d x h
Wireless Smoke Alarm	0919-9999	3 piece PDQ	0 47871 05557 9	100 47871 05557 6	8.5" x 6.75" x 9.75"
	0919-9998	10 piece Cut Case	0 47871 05557 9	200 47871 05557 3	8.5" x 21.75" x 9.75"
AC Wireless Smoke Alarm	1279-9999	3 piece PDQ	0 47871 05560 9	100 47871 05560 6	8.5" x 6.75" x 9.75"
	1279-9998	10 piece Cut Case	0 47871 05560 9	200 47871 05560 3	8.5" x 21.75" x 9.75"
Smoke Sounder	1278-9999	2 piece PDQ	0 47871 05563 0	100 47871 05563 7	8.5" x 6.75" x 9.75"
	1278-9998	7 piece Cut Case	0 47871 05563 0	200 47871 05563 4	8.5" x 21.75" x 9.75"
Starter Kit (2 DC smokes + 1 sounder)	21005567	3 piece PDQ	0 47871 05566 1	100 47871 05566 8	13.5" x 10.25" x 14.75"
	21005568	7 piece Cut Case	0 47871 05566 1	200 47871 05566 5	13.5" x 21.75" x 14.75"

Kidde Wireless System: Architectural, Engineering, and Technical Specifications

Architectural and Engineering Specifications for Wireless Model RF-SM-AC

The smoke alarm shall be Kidde Model RF-SM-AC or approved equal. It shall be powered by a 120VAC, 60Hz source along with a 9V battery backup. The unit shall incorporate an ionization sensor with nominal sensitivity of 0.60±0.1 percent/ft. The temperature operation rage shall be between 40F (4C) to 100F (38C) and the humidity operating range shall be up to 85% relative humidity.

The smoke alarm can be installed on any standard single gang electrical box, up to a 4" octagon junction box. The electrical connection (to the alarm) shall be made with a plug-in connector.

The smoke alarm shall work interconnected immediately out of the box without any user programming. A maximum of 24 Kidde devices can be interconnected in a multiple station arrangement. The interconnect system must not exceed the NFPA (National Fire Protection Association) limit of 18 initiation devices, of which 12 can be smoke alarms. With 18 initiating devices (smoke, heat, CO, etc.), interconnected, it is still possible to interconnect 6 strobe lights and or relay modules.

The smoke alarm shall give fire alarm signals priority over all other signals. The smoke alarm shall incorporate a maximum allowable response delay from activation of an initiating device to receipt and alarm/display by the receiver/control unit of 30 seconds. The smoke alarm shall automatically repeat alarm transmission at intervals not exceeding 60 seconds until the initiating device is returned to its non-alarm condition (per NFPA 72, Chapter 6, Section 6.16.3.2).

The smoke alarm shall have remote hush and low battery hush capabilities. The unit shall have alarm memory to indicate which alarm in a system was the initiating alarm (per NFPA 72, Chapter 6, Section 6.16.3.5). The unit shall provide optional tamper resistance that deters removal of the unit from the wall or ceiling.

The alarm shall include a test button that will electronically simulate the presence of smoke and cause the unit to go into alarm. This sequence tests the unit's electronics, battery and horn to ensure proper operation.

The unit shall include a piezoelectric horn that is rated at 85 decibels at 10 feet. The smoke alarm shall produce an audible signal in the form of the "three pulse" temporal pattern. Each ON phase shall last 0.5-second +/-10 percent. After the third of these ON phases, there shall be an OFF phase that lasts 1.5 seconds +/-10 percent. This pattern should repeat continuously without interruption. The unit shall also include a low battery warning utilizing a brief alarm chirp every 30-40 seconds for a minimum of seven (7) days.

The unit shall incorporate one red LED to the alarm's current status and mode of operation. The red LED will flash in conjunction with the alarm beep, and flash during a smoke alarm, a low battery mode and a unit error. The unit shall incorporate one green LED to indicate the alarm's current status and mode of operation. The green LED will indicate one of five (5) conditions:

Standby Condition (powered by AC and battery backup)– The LED will be constant on

Standby Condition (powered by only battery backup) – The LED will flash approximately every 10 seconds.

Initiating Alarm Indicator – The LED will flash every second while sounding an alarm to signify that the alarm sensed a smoke hazard.

Alarm Memory Condition – The LED will flash every second signifying that the alarm sensed a smoke hazard. It will continue to flash every second until the test/reset button is pressed, thus resetting the alarm.

Hush® Mode Condition – The LED will flash every 2 seconds while the alarm is in Hush® Mode

The unit shall at a minimum meet the requirements of UL217, NFPA72. The State of California Fire Marshall, NFPA 101 (one and two family dwellings) Federal Housing Authority (FHA), Housing and Urban Development (HUD). It shall also include a 10-year manufacture's limited warranty.

Technical Specifications:

Power Source: 120VAC; 9V battery backup
Audio Alarm: 85dB at 10ft
Temperature Range: 40F (4.4C) to 100F (37.8C)
Humidity Range: up to 85% relative humidity (RH)
Sensor: Ionization
Wiring: Quick connect plug with 8" pigtails
Size: 5.75" in diameter x 1.25" depth
Weight: .5lb
Interconnects: Up to 24 devices (of which 18 can be initiating)

Architectural and Engineering Specifications for Wireless Model RF-SM-DC

The smoke alarm shall be Kidde Model RF-SM-DC or approved equal. It shall be powered by three (3) AA batteries. The unit shall incorporate an ionization sensor with nominal sensitivity of 0.69±0.19%/ft. The temperature operation range shall be between 40F (4C) to 100F (38C) and the humidity operating range shall be up to 85% relative humidity.

The smoke alarm shall work interconnected immediately out of the box without any user programming. A maximum of 24 Kidde devices can be interconnected in a multiple station arrangement. The interconnect system must not exceed the NFPA (National Fire Protection Association) limit of 18 initiation devices, of which 12 can be smoke alarms. With 18 initiating devices (smoke, heat, CO, etc.), interconnected, it is still possible to interconnect 6 strobe lights and or relay modules. The smoke alarm shall give fire alarm signals priority over all other signals. The smoke alarm shall incorporate a maximum allowable response delay from activation of an initiating device to receipt and alarm/display by the receiver/control unit of 30 seconds. The smoke alarm shall automatically repeat alarm transmission at intervals not exceeding 60 seconds until the initiating device is returned to its non-alarm condition (per NFPA 72, Chapter 6, Section 6.16.3.2).

The smoke alarm shall have remote hush and low battery hush capabilities. The unit shall have alarm memory to indicate which alarm in a system was the initiating alarm (per NFPA 72, Chapter 6, Section 6.16.3.5). The unit shall provide optional tamper resistance that deters removal of the unit from the wall or ceiling.

The alarm shall include a test button that will electronically simulate the presence of smoke and cause the unit to go into alarm. This sequence tests the unit's electronics, battery and horn to ensure proper operation.

The unit shall include a piezoelectric horn that is rated at 85 decibels at 10 feet. The smoke alarm shall produce an audible signal in the form of the "three pulse" temporal pattern. Each ON phase shall last 0.5-second +/-10 percent. After the third of these ON phases, there shall be an OFF phase that lasts 1.5 seconds +/-10 percent. This pattern should repeat continuously without interruption. The unit shall also include a low battery warning utilizing a brief alarm chirp every 30-40 seconds for a minimum of seven (7) days.

The unit shall incorporate one red LED to indicate the alarm's current status and mode of operation. The red LED will flash in conjunction with the alarm beep, and flash during a smoke alarm, a low battery mode and a unit error.

The unit shall incorporate one green LED to indicate the alarm's current status and mode of operation. The green LED will indicate one of four (4) conditions:

Standby Condition – The LED will flash approximately every 10 seconds.

Initiating Alarm Indicator – The LED will flash every second while sounding an alarm to signify that the alarm sensed a smoke hazard.

Alarm Memory Condition – The LED will flash every second signifying that the alarm sensed a smoke hazard. It will continue to flash every second until the test/reset button is pressed, thus resetting the alarm.

Hush® Mode Condition – The LED will flash every 2 seconds while the alarm is in Hush® Mode

The unit shall at a minimum meet the requirements of UL217, NFPA72 (chapter 11 2002 edition), The State of California Fire Marshall, NFPA 101 (one and two family dwellings) Federal Housing Authority (FHA), Housing and Urban Development (HUD). It shall also include a 10-year manufacture's limited warranty.

Technical Specifications:

Power Source: 3 AA batteries
Audio Alarm: 85dB at 10ft
Temperature Range: 40F (4.4C) to 100F (37.8C)
Humidity Range: up to 85% relative humidity (RH)
Sensor: Ionization
Wiring: None
Size: 5.75" in diameter x 1.25" depth
Weight: .5lb
Interconnects: Up to 24 devices (of which 18 can be initiating)

Architectural and Engineering Specifications for Wireless Model RF-SND

The smoke sounder shall be Kidde Model RF-SND or approved equal. It shall be powered by a 120VAC, 60Hz source along with a 9V battery backup. The temperature operation rage shall be between 40F (4C) to 100F (38C) and the humidity operating range shall be up to 85% relative humidity.

The units shall include an attached plug that can be installed in any outlet following the manufacturer's recommended guidelines. The plug can be snapped into the back of the unit and shall be capable of being rotated so the alarm remains vertical independent of whether the electrical socket is mounted vertically or horizontally. In addition, the alarm plug will have an attached extension cord so the unit can be plugged into the wall outlet and then placed on a table or shelf.

The smoke sounder shall work interconnected immediately out of the box without any user programming. The unit shall give fire alarm signals priority over all other signals.

The unit shall have remote hush and low battery hush capabilities. The unit shall include a test button that will electronically simulate receiving an alarm signal and cause the unit to go into alarm. This sequence tests the unit's electronics, battery and horn to ensure proper operation.

The unit shall incorporate one red LED to the alarm's current status and mode of operation. The red LED will flash in conjunction with the alarm beep, and flash during a smoke alarm, a low battery mode and a unit error. The unit shall incorporate one green LED to indicate the alarm's current status and mode of operation. The green LED will indicate one the two (2) conditions:

Powered by AC and battery backup – The LED will be constant on.

Powered by only battery backup – The LED will flash every 10 seconds.

The unit shall include a 5-year manufacture's limited warranty.

Technical Specifications:

Power Source: 120VAC; 9V battery backup
Audio Alarm: 85dB at 10ft
Temperature Range: 40F (4.4C) to 100F (37.8C)
Humidity Range: up to 85% relative humidity (RH)
Sensor: None
Wiring: Plug-In
Size: 3.75"W x 2.5"D x 6"H
Weight: 1lb
Interconnects: Up to 24 devices (of which 18 can be initiating)

Kidde

1394 South Third Street
Mebane, NC 27302

32 00 00 EXTERIOR IMPROVEMENTS

32 90 00 PLANTING

32 93 00 PLANTS

32 93 23 Plants and Bulbs

The solar house is located in the center of the designated lot surrounded by landscaped areas with prairie plants. Not only prairies are native to Illinois, but also, at one time, prairies dominated over 60% of the landscape of Illinois. They are well suited for the locale and have traits such as cold hardiness and tolerance for drought or inundation.

The north side of the solar house has an entry garden. The garden is a demonstrative garden which mimics Illinois's horizontal landscape by using plant materials, such as Indian grass, switch grass, and little bluestem. There are a recreational garden and a vegetable garden on the south side. The recreational garden surrounds the outdoor deck area. By using colorful flowering prairie plants, the garden aims to create an attractive outdoor activity area. The vegetable garden provides space to grow herbs and vegetables.

Please refer to the quote on page 320 for a list of the plants that will be used.

32 94 00 PLANTING ACCESSORIES

32 94 33 Planters

No direct digging and planting will happen on site. Flower pots with plants will be transported to site during the competition. Wood planter boxes with minimum footprint on the ground are being designed to hold the flower pots. The planter boxes will be filled with wood chips to cover the pots.

Quote

Possibility Place Nursery
7548 W. Monee-Manhattan Rd.
Monee, Il 60449

(708)534-3988

Invoice #: 00103974

FAX: 217-244-3219
PHONE: 217-333-7847

Bill To:
UNIVERSITY OF ILLINOIS
TOM VOIGHT
1102 S GOODWIN AVE
URBANA, IL 61801

Ship To:
ALLERTON PARK
SOLAR DECATHALON LANDSCAPING PLANT COMPETITION

SALESPERSON	YOUR NO.	SHIP VIA	COL	PPD	SHIP DATE	TERMS	DATE	PG.
CONNOR SHAW		PPN			10/1/07	Net 30	5/25/07	1

QTY	ITEM NO.	DESCRIPTION	PRICE	UNIT	DISC %	EXTENDED	TX.
32	ZSCHSCOP5G	SCHIZACHYRIUM SCOPARIUM Little bluestem	$12.00	#5 GA		$384.00	
100	ZSORNUTA5G	SORGHASTRUM NUTANS Indian grass	$12.00	#5 GA		$1,200.00	
56	ZPANVIRG5G	PANICUM VIRGATUM Switch grass	$12.00	#5 GA		$672.00	
7	ZSPOHETE5G	SPOROBOLUS HETETEROLEPIS Northern dropseed	$12.00	#5 GA		$84.00	
17	ZLIA5CAR5G	LIATRIS SCARIOSA Savanna blazing star	$12.00	#5 GA		$204.00	
66	ZMIXPERE5G	MIXED PERENNIALS Mix of Savanna blazing star, Solidego Flexicalus or Speciosa and Rudbekia triloba	$12.00	#5 GA		$792.00	
10	ZASTNOVA5G	ASTER NOVAE-ANGLIAE New Erland aster	$12.00	#5 GA		$120.00	
2	AROMELA5G05	ARONIA MELANOCARPA Black Chokeberry	$13.00	#5 GA		$26.00	
2	AROARBU5G05	ARONIA ARBUTIFOLIA Red chokeberry	$13.00	#5 GA		$26.00	
1	DELIVERY	DELIVERY CHARGE BASED ON ROUND TRIP MILES					

CALL WHEN READY

SALE AMT.	$3,508.00
FREIGHT	$0.00
SALES TAX	$0.00
TOTAL AMT.	$3,508.00
PAID TODAY	$0.00
BALANCE DUE	$3,508.00

APPENDIX STAMPED STRUCTURAL CALCULATIONS AND DRAWINGS

The stamped structural calculations are appended to the following pages.