Third International Solar Decathlon

University of Missouri – Rolla Solar House Team

Specifications
August 7, 2007 Submittal

Submitted by:
2007 University of Missouri – Rolla Solar House Team

Competition Presented by:
U.S. Department of Energy (DOE) in partnership with DOE's National Renewable Energy Laboratory

Table of Contents

Summary of Changes

Drawings

The following drawings have been updated since the construction drawings submittal on June 1, 2007:

- Cover (1)
- Table of Contents (2)
- Site Plan (C1)
- Solar Envelopes (C2-C3)
- Footprint & Conditioned Area (C4)
- Architectural Plans (A1-A2, A7-A8)
- Architectural Elevations (A3-A6)
- Structural Plans (S1-S13)
- Electrical Plans (E1-E8)
- Mechanical Plans (M1-M2)
- Plumbing Plans (P1)
- Layout Elevations (L1-L8)

The following drawings have been added since the construction drawings submittal on June 1, 2007:

- Architectural Plans
- Structural Plans (S16-S39)
- Electrical Plans
- Mechanical Plans
- Plumbing Plans
- Layout Elevations

Specifications

The following specifications have been updated since the specifications submittal on June 1, 2007:

- BP Solar
- Trojan Battery
- Watts Radiant Plumbing and Radiant Flooring
- GE SCB1001KSS Advantium Wall Oven
- GE PDW9900/9980N Dishwasher
- GE JVB94SH Downdraft
- Asko WCAM1812
- Thermocore Structural Specifications
- Home Automation Inc.

The following specifications have been added since the specifications submittal on June 1, 2007:

- Trojan Battery MSDS sheet
- UniRac Sunframe
- Apricus Evacuated Tube System
- Water Tight Plugs
- Air Condenser and Air Handler Specs---American Standard
- Bradford White Hot Water Tank
- Supply and Wastewater Tanks
- 12 Volt Pump
- Wolf Subzero CT15I/S
- GE GD20SBS Refrigerator
- Sterling Rockton 402024 Dual Flush Toilet
- ICC Evaluation Service for Thermocore SIPS
- NTA Report on Thermocore SIPS
- Paperstone Exterior Material
- Johns Manville PVC roof
- Lyptus Glueless Flooring
- Tamko Flash-n-Wrap
- Solar Innovations Folding Glass Door
- Gypsum Mold Tough Drywall
- GEM electric car
- Truth Window Motors
- Shipping and Module Loads
- Fire Extinguisher
- FireX Smoke and Heat Alarms
- MSDS :Etheylene Glycol
  PVC Cleaner
  Lightweight Joint Compound

Glue-Off Adhesive Remover
Isopropyl Rubbing Alcohol
Deck Stain
Latex Paint

Structural Calculations

Stamped structural calculations are being submitted with this submitted and the stamped drawings were submitted with the last submittal on March 6, 2007.

Solar Cell Specifications

Solar Cell and Module Specification Sheet
A hard copy of the manufacturer's solar cell and module specification sheet can be found in the appendix.

Manufacturer's Name and Contact Information
BP Solar
630 Solarex Ct.
Frederick, Maryland 21703
United States
Phone: +1 301-698-4200
Fax: +1 301-698-4201
www.bp.com

Stock Number, Type or Description
BP 4175
175 Watt Photovoltaic Module
Premium efficiency 175 watt photovoltaic module using enhanced silicon nitride MonoCrystalline cells and featuring a black backsheet and frame

Manufacturer's Quote for Cell or Module Area
Dimension (module) 1593 x 790 x 50 mm

Manufacturer's Quote for Performance

Rated Power	175W
Power Tolerance	3%
Nominal Voltage	24V

Cost (US$) per Watt for Each Cell or Module
$1125/ 175 Watt per panel
$6.43/Watt

Battery Specifications

Copy of Manufacturer's Battery Specifications Sheets
A copy of the manufacturer's specification sheet can be found in the appendix.

Material Safety Data Sheets (MSDS) Obtained from the Manufacturer
A copy of the manufacturer's MSDS can be found in the appendix.

Manufacturer's Name and Contact Information
Trojan Battery Company – California
12380 Clark Street
Santa Fe Springs, CA 90670
Phone: +1 800-423-6569 or +1 562-236-3000
Fax: +1 562-236-3282
www.trojan-battery.com

Stock Number, Type or Description
L16H 6V Deep Cycle Battery

Module Voltage
6V

Bus Voltage
48V

Number of Modules to be Used in the House
24

Manufacturer's Specifications, Including Capacity (kWh), Weight (lb.) and Cost (US$)

Capacity	2.7 gallons per battery; 2.52 kWh (20 hour discharge rate)
Weight	121 lbs.
Cost	$377.95 (retail)

Spill and Damage Protocols and Procedures
The spill and damage protocol is shown on the manufacturer's MSDS sheet, in the appendix. We will be using the OutBack, PSR-SCT, spill containment tray which will hold the contents of one battery; each tray holds four batteries.

Information not Included in Drawings
The ventilation calculations for the battery cabinet are included in the appendix.

Manufacturer's Data Sheets

A copy of the manufacturer's data sheets can be found in the appendix.

Material Safety Data Sheets (MSDS)

The MSDS for all materials used at the event are included in the appendix.

Categorized Inventory of Water Usage

This report explains the reasoning behind the estimated amount of water required during the Solar Decathlon competition.
Dishwasher: One load a day will be required during the competition, or 5 loads total.

The maximum water usage for the GE PDW9900/9980N is about 10 gal but that size of a wash load will not be needed during competition so we will use about 8.8 gal per load giving us 44 gallons total.

Washing Machine: Two loads will be required during the course of the contest. The Asko WCAM 1812 uses about 20 gallons per load on average. This will give us a total of 40 gallons for the washer.

Shower: Two tests of 15 gallons per day are required, yielding 150 gallons for the entire week.

Radiant Heating System: The estimated amount of water needed to run the Radiant Heating System is about 20 gallons.

Testing: 25 gallons are allocated for testing

Reflecting Pool: 250 gallons of water are allocated for our reflecting pool

Cooking Contest: The cooking contest will require about 4 gallons of water.

The Hot Water tank will also be filled at competition for a total amount of 80 gallons of water which will also be used to run water through the evacuated tubes.

Subtotal: 44+40+150+20+24+250+4+80= 612 gallons

+25% for extra in case of a mishap= 765 gallons

Appendix

BP 4175

175 Watt Photovoltaic Module

High-efficiency photovoltaic module using silicon nitride monocrystalline silicon cells.

Performance

Rated power (P_{max})	175W
Power tolerance	± 5%
Nominal voltage	24V
Limited Warranty[1]	25 years

Configuration

BP 4175B	Framed module with output cables and polarized Multicontact (MC) connectors

Electrical Characteristics[2]	BP 4175
Maximum power (P_{max})[3]	175W
Voltage at Pmax (V_{mp})	35.7V
Current at Pmax (I_{mp})	4.9A
Warranted minimum P_{max}	166.5W
Short-circuit current (I_{sc})	5.4A
Open-circuit voltage (V_{oc})	44.0V
Temperature coefficient of I_{sc}	(0.065±0.015)%/ °C
Temperature coefficient of V_{oc}	-(160±10)mV/°C
Temperature coefficient of power	-(0.5±0.05)%/ °C
NOCT (Air 20°C; Sun 0.8kW/m^2; wind 1m/s)	47±2°C
Maximum series fuse rating	15A (S, L)
Maximum system voltage	600V (U.S. NEC & IEC 61215 rating)

Mechanical Characteristics

Dimensions	Length: 1595mm (62.8") Width: 790mm (31.1") Depth: 50mm (1.97")
Weight	15.4 kg (34.0 pounds)
Solar Cells	72 cells (125mm x 125mm) in a 6x12 matrix connected in series
Output Cables	RHW AWG# 12 (3.3mm) cable with polarized weatherproof DC rated Multicontact connectors; asymmetrical lengths - 1250mm (-) and 800mm (+)
Diodes	***IntegraBus™*** technology includes Schottky by-pass diodes integrated into the printed circuit board bus
Construction	Front: High-transmission 3mm (1/8th inch) tempered glass; Back: Tedlar; Encapsulant: EVA
Frame	Bronze anodized aluminum alloy type 6063T6 Universal frame

1. Module Warranty: 25-year limited warranty of 80% power output; 12-year limited warranty of 90% power output; 5-year limited warranty of materials and workmanship. See your local representative for full terms of these warranties.
2. These data represent the performance of typical BP 4175 products, and are based on measurements made in accordance with ASTM E1036 corrected to SRC (STC.)
3. During the stabilization process that occurs during the first few months of deployment, module power may decrease by up to 3% from typical P_{max}.

Quality and Safety

ESTI	Module power measurements calibrated to World Radiometric Reference through ESTI (European Solar Test Installation at Ispra, Italy)
	Listed by Underwriter's Laboratories for electrical and fire safety (Class C fire rating)
	Certified to IEC 61215 standards by ASU/PTL

BP 4175 I-V Curves

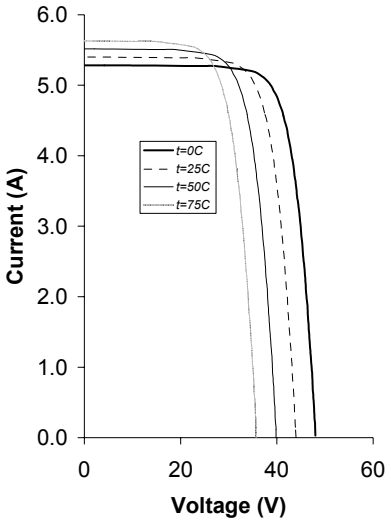

Qualification Test Parameters

Temperature cycling range	-40°C to +85°C (-40°F to 185°F)
Humidity freeze, damp heat	85% RH
Static load front and back (e.g. wind)	50psf (2400 pascals)
Front loading (e.g. snow)	113psf (5400 pascals)
Hailstone impact	25mm (1 inch) at 23 m/s (52mph)

Module Diagram

Dimensions in brackets are in inches. Un-bracketed dimensions are in millimeters. Overall tolerances ±3mm (1/8")

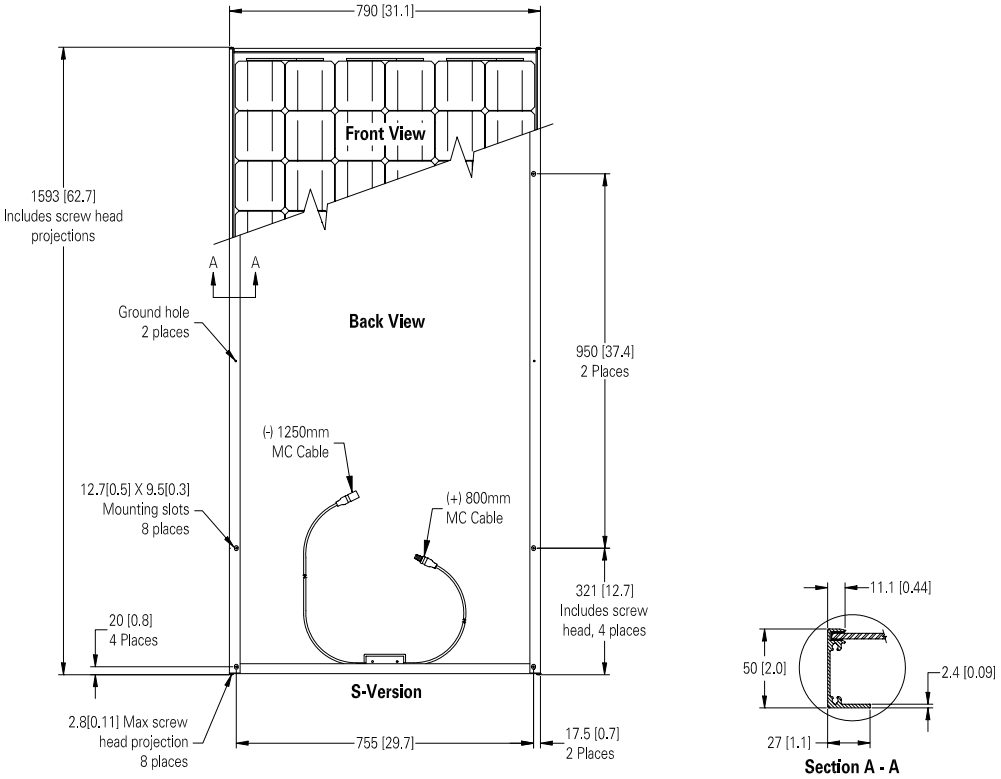

Self-tapping grounding screw, instruction sheet, and warranty document included with each module.

Note: This publication summarizes product warranty and specifications, which are subject to change without notice. Additional information may be found on our web site: **www.bpsolar.com**

THE SPECS

Trojan
BATTERY COMPANY

PRODUCT SPECIFICATION GUIDE

- Since 1925, Trojan has been the world's leading manufacturer of deep cycle batteries.
- Trojan batteries are a clean, reliable power source for golf, electric vehicle, floor machine, AWP, RV, marine, mobility and renewable energy.
- Trojan's proprietary Maxguard® Advanced Design Separator and exclusive Alpha Plus® Paste Formulation deliver longer life and enhanced performance.
- Trojan offers outstanding technical support; talk to an applications engineer at 800.423.6569 or visit www.trojanbattery.com for round the clock access.
- With a wide variety of superior products, Trojan has a battery to meet your needs.

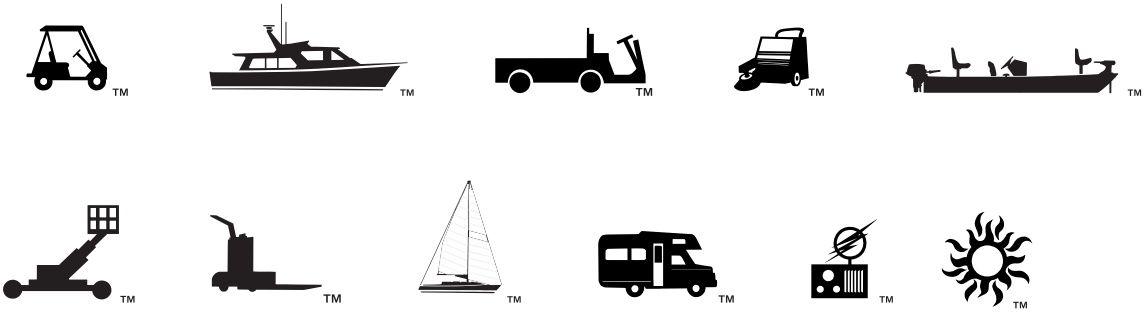

battery specifications

Including MINN KOTA Marine Batteries by Trojan®

BCI Group Size	Type	Capacity[A] (Minutes) @25 Amps	Capacity[A] (Minutes) @75 Amps	Cranking Performance CCA[B] @0°F	Cranking Performance CA[C] @32°F	5 Hr[D] Rate (AH)	20 Hr[E] Rate (AH)	Voltage	Terminal Config. (See Page 4)	Dimensions[F] inches (mm) L	Dimensions[F] inches (mm) W	Dimensions[F] inches (mm) H	Weight lbs. (kg)
DEEP CYCLE - 6 VOLT													
GC2	T-605	383	105	-	-	175	210	6	2,6,11	10 3/8 (264)	7 1/8 (181)	10 7/8 (276)	58 (26)
GC2	T-105	447	115	-	-	185	225	6	2,6,11	10 3/8 (264)	7 1/8 (181)	10 7/8 (276)	62 (28)
GC2	T-125	488	132	-	-	195	240	6	2,6,11	10 3/8 (264)	7 1/8 (181)	10 7/8 (276)	66 (30)
GC2H	T-145	530	145	-	-	215	260	6	2,6,11	10 3/8 (264)	7 1/8 (181)	11 5/8 (295)	72 (33)
DIN	TE35	500	135	-	-	200	245	6	2	9 5/8 (244)	7 1/2 (191)	10 7/8 (276)	68 (31)
N/A	J250G	475	130	-	-	195	235	6	11	11 5/8 (295)	7 (178)	11 7/8 (302)	67 (30)
N/A	J250P	540	135	-	-	215	250	6	7	11 5/8 (295)	7 (178)	11 1/2 (292)	72 (33)
N/A	J305G	620	170	-	-	255	310	6	11	11 5/8 (295)	7 (178)	14 3/8 (365)	90 (41)
N/A	J305P	675	175	-	-	270	315	6	7	11 5/8 (295)	7 (178)	14 3/8 (365)	91 (41)
N/A	J305H	745	195	-	-	285	335	6	7	11 5/8 (295)	7 (178)	14 3/8 (365)	97 (44)
N/A	L16G	750	185	-	-	305	370	6	1,11	11 5/8 (295)	7 (178)	17 (432)	106 (48)
N/A	L16P	805	200	-	-	320	390	6	1,7	11 5/8 (295)	7 (178)	16 3/4 (424)	113 (51)
N/A	L16H	885	225	-	-	345	420	6	7	11 5/8 (295)	7 (178)	16 3/4 (424)	121 (55)
DEEP CYCLE - 8 VOLT													
GC8	T-860	-	G	-	-	125	150	8	6	10 3/8 (264)	7 1/8 (181)	10 7/8 (276)	56 (25)
GC8	T-875	295	H	-	-	145	170	8	2,6,11	10 3/8 (264)	7 1/8 (181)	10 7/8 (276)	63 (29)
GC8	T-890	340	I	-	-	155	190	8	2,6,11	10 3/8 (264)	7 1/8 (181)	10 7/8 (276)	69 (31)
DEEP CYCLE - 12 VOLT													
24	24TMX	140	36	440	540	70	85	12	12	11 1/4 (286)	6 3/4 (171)	9 3/4 (248)	47 (21)
27	27TMX	175	45	530	650	85	105	12	12	12 3/4 (324)	6 3/4 (171)	9 3/4 (248)	55 (25)
27	27TMH	200	51	620	760	95	115	12	2,11,12	12 3/4 (324)	6 3/4 (171)	9 3/4 (248)	59 (27)
30H	30XHS	225	57	665	820	105	130	12	2,11,12	13 15/16 (355)	6 3/4 (171)	10 1/16 (256)	66 (30)
30H	31XHS	225	57	665	820	105	130	12	10	13 (330)	6 3/4 (171)	9 1/2 (241)	67 (30)
N/A	T-1275	280	J	-	-	120	150	12	13	12 7/8 (327)	7 (178)	10 7/8 (276)	82 (37)
N/A	J150	280	70	-	-	120	150	12	3	13 13/16 (351)	7 (178)	10 7/8 (276)	84 (38)
N/A	J185G	300	85	-	-	150	180	12	11	15 (381)	7 (178)	14 5/8 (371)	105 (48)
N/A	J185P	375	95	-	-	160	195	12	7	15 (381)	7 (178)	14 5/8 (371)	113 (51)
N/A	J185H	415	110	-	-	180	215	12	7	15 (381)	7 (178)	14 5/8 (371)	122 (55)
N/A	DC-500ML	1050	272	-	-	361	450	12	1,2	19 1/4 (489)	10 5/8 (270)	16 3/4 (425)	332 (151)
DEEP CYCLE - 36 VOLT													
N/A	18DC-500ML	1050	272	-	-	361	450	36	5	35 1/4 (895)	19 1/8 (486)	16 3/4 (425)	986 (447)

BCI Group Size	Type	Capacity[A] (Minutes)		Cranking Performance		5 Hr[D] Rate (AH)	20 Hr[E] Rate (AH)	Voltage	Terminal Config. see page 4	Dimensions[F] inches (mm)			Weight lbs. (kg)
		@25 Amps	@75 Amps	CCA[B] @0°F	CA[C] @32°F					L	W	H	
VALVE REGULATED (GEL) - 12 VOLT													
24	SG-70	138	-	-	-	65	75	12	1,4	11 3/16 (279)	6 11/16 (168)	9 (223)	52 (24)
27	SG-90	169	-	-	-	77	86	12	1,4	13 1/16 (327)	6 11/16 (168)	9 (223)	61 (28)
TROJAN MARINE/RV DEEP CYCLE													
24	SCS150	150	36	530	650	80	100	12	8	11 1/4 (286)	6 3/4 (171)	9 3/4 (248)	50 (23)
27	SCS200	200	52	620	760	95	115	12	8	12 3/4 (324)	6 3/4 (171)	9 3/4 (248)	60 (27)
30H	SCS225	225	57	665	820	105	130	12	8	13 15/16 (355)	6 3/4 (171)	9 7/8 (251)	66 (30)
TROJAN MARINE/RV STARTING													
24	24SM-650	85	-	520	635	-	-	12	9	11 1/4 (286)	6 3/4 (171)	9 3/4 (248)	38 (17)
24	24SM-850	125	-	700	860	-	-	12	9	11 1/4 (286)	6 3/4 (171)	9 3/4 (248)	43 (20)
24	24SM-1000	165	-	825	1025	-	-	12	9	11 1/4 (286)	6 3/4 (171)	9 3/4 (248)	49 (22)
27	27SM-1100	205	-	860	1050	-	-	12	9	12 3/4 (324)	6 3/4 (171)	9 3/4 (248)	55 (25)
TROJAN MARINE/RV MAINTENANCE FREE STARTING													
24	24SM-850MF	125	-	700	860	-	-	12	9	10 3/16 (258)	6 1/2 (165)	9 7/16 (239)	43 (20)
24	24SM-1000MF	165	-	825	1025	-	-	12	9	10 3/16 (258)	6 1/2 (165)	9 7/16 (239)	49 (22)
TROJAN MARINE/RV DUAL PURPOSE													
24	24TMS	125	34	470	575	62	72	12	9	11 1/4 (286)	6 3/4 (171)	9 3/4 (248)	41 (19)
24	24TM	135	34	550	675	66	85	12	9	11 1/4 (286)	6 3/4 (171)	9 3/4 (248)	44 (20)
27	27TMS	145	39	550	675	73	85	12	9	12 3/4 (324)	6 3/4 (171)	9 3/4 (248)	48 (22)
27	27TM	160	38	630	770	79	105	12	9	12 3/4 (324)	6 3/4 (171)	9 3/4 (248)	50 (23)
TROJAN MARINE/RV AGM DUAL PURPOSE													
24	24-AGM	130	-	440	620	61	80	12	9	10 13/16 (259)	6 5/8 (168)	8 7/8 (226)	52 (24)
27	27-AGM	175	-	560	780	76	100	12	9	12 (305)	6 5/8 (168)	9 3/16 (233)	66 (30)
31	31-AGM	190	-	720	950	83	110	12	9	13 1/16 (208)	6 7/8 (174)	8 11/16 (221)	71 (32)
4D	4D-AGM	325	-	1110	1420	131	165	12	9	20 7/8 (530)	8 1/4 (209)	9 3/8 (237)	115 (52)
8D	8D-AGM	460	-	1450	1850	179	230	12	9	20 1/2 (521)	10 9/16 (269)	8 7/8 (226)	155 (70)
GC2	6V-AGM	385	-	1100	1400	154	200	6	9	10 1/4 (260)	7 1/16 (179)	10 5/8 (270)	65 (29)
MINN KOTA BY TROJAN DEEP CYCLE - 12 VOLT													
24	MK24DC	140	36	440	540	70	85	12	12	11 1/4 (286)	6 3/4 (171)	9 3/4 (248)	47 (21)
27	MK27DC	175	45	530	650	85	105	12	12	12 3/4 (324)	6 3/4 (171)	9 3/4 (248)	55 (25)
30H	MK31DC	190	50	575	710	100	120	12	12	13 15/16 (355)	6 3/4 (171)	9 7/8 (251)	66 (30)
MINN KOTA BY TROJAN DUAL PURPOSE STARTING/DEEP CYCLE - 12 VOLT													
24	MK24DP	125	34	470	575	62	72	12	9	11 1/4 (286)	6 3/4 (171)	9 3/4 (248)	41 (19)
27	MK27DP	145	39	550	675	73	85	12	9	12 3/4 (324)	6 3/4 (171)	9 3/4 (248)	48 (22)
MINN KOTA BY TROJAN STARTING - 12 VOLT													
24	MK550ST	65	-	420	515	-	-	12	9	11 1/4 (286)	6 3/4 (171)	9 3/4 (248)	36 (16)

A. Reserve Capacity or Capacity - the number of minutes a battery can be discharged at 25, 56 (Golf Deep Cycle batteries only) or 75 amps at 80°F and maintain a voltage above 1.75 v/cell.

B. C.C.A. (Cold Cranking Amps) - the discharge load in amperes which a new, fully charged battery can maintained for 30 seconds at 0°F at a voltage above 1.2 v/cell.

C. C.A. (Cranking Amps) - the discharge load in amperes which a new, fully charged battery can maintained for 30 seconds at 32°F at a voltage above 1.2 v/cell. This is sometimes referred to as marine cranking amps @ 32°F or M.C.A. @ 32°F.

D. 5 hour rate is based on IEC (International Electrotechnical Commission) temperature standard of 30°C (86°F).

E. 20 hour rate is a BCI sanctioned rating expressing ampere hours required to achieve an end voltage of 1.75 v/cell at 80°F and represents the batteries maximum capacity.

F. All dimensions taken from bottom of battery to top of terminal. Heights may vary according to type of terminals specified.

G. Capacity @56 Amps is 90 Minutes.

H. Capacity @56 Amps is 117 Minutes.

I. Capacity @56 Amps is 132 Minutes.

J. Capacity @56 Amps is 102 Minutes.

terminal configurations

1 "L" Terminal (LT)
2 Automotive Post (AP)
3 Embedded AP with Stud (EAPS)
4 Button Terminal
5 Cable and Plug
6 Low Profile Terminal (LPT)
7 AP and Stud Terminal (DT)
8 Dual Wingnut Terminal (DWNT)
9 Marine Dual Terminal (APW)
10 Stud Terminal
11 Universal Terminal (UT)
12 Wingnut (WNT)
13 Embedded Low Profile Terminal (ELPT)

"L" Terminal (LT)

Automotive Post (AP)

Embedded AP with Stud Terminal (EAPS)

Button Terminal

Low Profile Terminal (LPT)

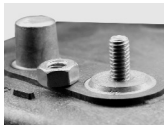

AP and Stud Terminal (DT)

Dual Wingnut Terminal (DWNT)

Marine Dual Terminal (APW)

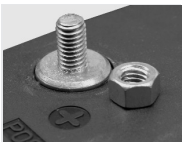

Stud Terminal

Universal Terminal (UT)

Wingnut Terminal (WNT)

Embedded Low Profile Terminal (ELPT)

AVAILABLE FROM TROJAN MASTER DISTRIBUTORS WORLDWIDE

Photos are for reference only.

Trojan® BATTERY COMPANY

For a Master Distributor near you, call 800-423-6569 or 562-946-8381
or visit www.trojanbattery.com.
Clean energy for life™

HAZARD RATING

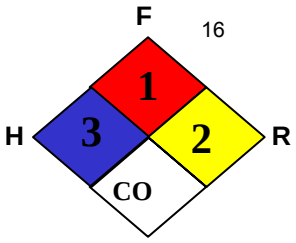

TROJAN BATTERY COMPANY
LEAD / ACID BATTERY

MATERIAL SAFETY DATA SHEET

SECTION 1-- CHEMICAL PRODUCT AND COMPANY IDENTIFICATION

MANUFACTURER'S NAME: TROJAN BATTERY COMPANY	EMERGENCY TELEPHONE NO.: CHEMTREC 800-424-9300
ADDRESS: 12380 CLARK ST., SANTA FE SPRINGS, CA 90670	OTHER INFORMATION CALLS: 562-946-8381 800-423-6569
PERSON RESPONSIBLE FOR PREPARATION: Ismael Pedroza, Jr.	Revision Date: February 19, 2006

SECTION 2 -- COMPOSITION/INFORMATION ON INGREDIENTS

C.A.S.	PRINCIPAL HAZARDOUS COMPONENT(S) (chemical & common name(s)	Hazard Category	%	ACGIH TLV	OSHA PEL-TWA
7439-92-1	Lead/Lead Oxide/Lead Sulfate	Acute-Chronic	60 - 97%	0.05 mg/m^3	0.05 mg/m^3
7440-36-0	Antimony	Chronic	1.5 - 4%	0.5 mg/m^3	0.5 mg/m^3
7440-38-2	Arsenic	Acute-Chronic	< 1%	0.01 mg/m^3	0.01mg/m^3
7664-93-9	Sulfuric Acid (Battery Electrolyte)	Reactive-Oxidizer Acute-Chronic	10 - 38%	1.0 mg/m^3	1.0 mg/m^3
7440-70-2	Calcium	Reactive	< 0.15%	Not established	Not established
7440-31-5	Tin	Chronic	< 0.3%	2.0 mg/m^3	Not established

NOTE: PEL's for individual states may differ from OSHA PEL's. Check with local authorities for the applicable state PEL's.
OSHA - Occupational Safety and Health Administration; ACGIH - American Conference of Governmental Industrial Hygienists; NIOSH - National Institute for Occupational Safety and Health.

COMMON NAME: (Used on label)
(Trade Name & Synonyms) Lead/Acid Storage Battery Chemical Family: Toxic and Corrosive Material Mixture
Chemical Name: Lead/Acid Storage Battery Formula: Lead and Acid (electrolyte)

SECTION 3 -- HAZARD IDENTIFICATION

Signs and Symptoms of Exposure	1. Acute Hazards	Do not open battery. Avoid contact with internal components. Internal components include lead and liquid electrolyte. Electrolyte - Electrolyte is corrosive and contact may cause skin irritation and chemical burns. Electrolyte causes severe irritation and burns of eyes, nose and throat. Ingestion can cause severe burns and vomiting. Lead -Direct skin or eye contact may cause local irritation. Inhalation or ingestion of lead dust or fumes may result in headache, nausea, vomiting, abdominal spasms, fatigue, sleep disturbances, weight loss, anemia and leg, arm and joint pain.
2. Subchronic and Chronic Health Effects	Electrolyte - Repeated contact with sulfuric acid battery electrolyte fluid may cause drying of the skin which may result in irritation, dermatitis, and skin burns. Repeated exposure to sulfuric acid mist may cause erosion of teeth, chronic eye irritation and/or chronic inflammation of the nose, throat and lungs. Lead - Prolonged exposure may cause central nervous system damage, gastrointestinal disturbances, anemia, wrist-drop and kidney dysfunction. Pregnant women should be protected from excessive exposure to prevent lead from crossing the placental barrier and causing infant neurological disorders. **California Proposition 65 Warning:** Battery posts, terminals, and related accessories contain lead and lead compounds, chemicals known to the State of California to cause cancer and reproductive harm, and during charging, strong inorganic acid mists containing sulfuric acid are evolved, a chemical Known to the State of California to cause cancer. Wash hands after handling.	
Medical Conditions Generally Aggravated by Exposure	If battery is broken or material is spilled, then persons with the following medical conditions must take precautions: pulmonary edema, bronchitis, emphysema, dental erosion and tracheobronchitis.	
Routes of Entry	Inhalation - YES Ingestion - YES	Eye Contact - YES Skin Contact - YES

Chemical(s) Listed as Carcinogen or potential Carcinogen	Proposition 65 - YES	National Toxicology Program - YES	I.A.R.C. Monographs - YES	OSHA - NO	EPA CAG - YES	NIOSH - YES

SECTION 4 -- FIRST AID MEASURES

Emergency and First Aid Procedures	Contact with internal components if battery is opened, broken or spilled.
1. Inhalation	Remove to fresh air and provide medical oxygen/CPR if needed. Obtain medical attention.
2. Eyes	Immediately flush with water for at least 15 minutes, hold eyelids open. Obtain medical attention.
3. Skin	Flush contacted area with large amounts of water for at least 15 minutes. Remove contaminated clothing and obtain medical attention if necessary.
4. Ingestion	Do not induce vomiting. If conscious drink large amounts of water/milk. Obtain medical attention. Never give anything by mouth to an unconscious person.

SECTION 5 - FIREFIGHTING MEASURES

Flash Point	Not Applicable	Flammable Limits in Air % by Volume (When charging)	Hydrogen (H_2)	Lower 4.1%	Upper 74.2%	Extinguisher Media	Class ABC, CO_2, Halon	Auto-Ignition Temperature	Polypropylene 675° F
Special Fire Fighting Procedures	Lead-acid batteries do not burn or burn with difficulty. Do not use water on fires where molten metal is present. Extinguish fire with agent suitable for surrounding combustible materials. Cool exterior of battery if exposed to fire to prevent rupture. The acid mist and vapors generated by heat or fire are corrosive. Use NIOSH approved self-contained breathing apparatus (SCBA) and full protective equipment operated in positive-pressure mode.								
Unusual Fire and Explosion Hazards	Hydrogen gas and sulfuric acid vapors are generated upon overcharge and polypropylene case failure. Ventilate charging areas as per ACGIH Industrial Ventilation : A Manual of Recommended Practice and National Fire Code, 1980 Vol. 1, P. 12, B-9, 10. Hydrogen gas may be flammable or explosive when mixed with air, oxygen, chlorine. Avoid open flames/sparks/other sources of ignition near battery. To avoid risk of fire or explosion, keep sparks or other sources of ignition away from batteries and do not allow metallic materials to simultaneously contact negative and positive terminals of cells and batteries. SULFURIC ACID REACTS VIOLENTLY WITH WATER/ORGANICS.								

SECTION 6 -- ACCIDENTAL RELEASE MEASURES

Procedures for Cleanup: Stop release, if possible. Avoid contact with any spilled material. Contain spill, isolate hazard area, and deny entry. Limit site access to emergency responders. Neutralize with sodium bicarbonate, soda ash, lime or other neutralizing agent. Place battery in suitable container for disposal. Dispose of contaminated material in accordance with applicable local, state and federal regulations. Sodium bicarbonate, soda ash, sand, lime or other neutralizing agent should be kept on-site for spill remediation.

Personal Precautions: Acid resistant aprons, boots and protective clothing. ANSI approved safety glasses with side shields/face shield recommended. Ventilate enclosed areas.

Environmental Precautions: Lead and its compounds and sulfuric acid can pose a severe threat to the environment. Contamination of water, soil, and air should be prevented.

SECTION 7 -- HANDLING AND STORAGE

Precautions to be Taken in Handling and Storage	Keep away from flames during and immediately after charging. Combustion or overcharging may create or liberate toxic and hazardous gases and liquids including hydrogen, sulfuric acid mist, sulfur dioxide, sulfur trioxide, stibine, arsine and sulfuric acid. Store batteries in cool, dry, well ventilated area. Do not short circuit battery terminals, or remove vent caps during storage or recharging. Protect battery from physical damage.
Other Precautions	GOOD PERSONAL HYGIENE AND WORK PRACTICES ARE MANDATORY. Refrain from eating, drinking or smoking in work areas. Thoroughly wash hands, face, neck, and arms before eating, drinking or smoking. Launder soiled clothing before reuse. Emptied batteries contain hazardous sulfuric acid residue.

SECTION 8 -- EXPOSURE CONTROLS AND PERSONAL PROTECTION

Respiratory Protection (Specify Type)	Acid/gas NIOSH approved respirator is required when the PEL is exceeded or employee experiences respiratory irritation. When exposure levels are unknown or when firefighting, wear a self-contained breathing apparatus with a full facepiece operated in a positive pressure mode.				
Ventilation	Must be provided when charging in an enclosed area. Change air every 15 min.	Local Exhaust	When PEL is exceeded.	Mechanical (General)	Normal mechanical ventilation recommended for stationary applications.
Protective Gloves	Wear rubber or plastic acid resistant gloves with elbow length gauntlet when filling batteries.	Eye Protection	ANSI approved safety glasses with side shields/face shield recommended. Safety goggles.		
Other Protective Clothing or Equipment	Ventilation as described in the Industrial Ventilation Manual produced by the American Conference of Governmental Industrial Hygienists, shall be provided in areas where exposures are above the PEL or TLV specified by OSHA or other local, state and federal regulations. Acid-resistant rubber or plastic apron, boots and protective clothing. Safety shower and eyewash.				

SECTION 9 -- PHYSICAL AND CHEMICAL PROPERTIES

Boiling Point	Electrolyte Approx. 235° F	Vapor Pressure	Electrolyte 1 mm Hg @ 145.8° F	Specific Gravity	Electrolyte (H_20 = 1) 1.250 - 1.320 pH < 2	Melting Point	Polypropylene < 320° F
Percent Volatile by Volume (%)	Not Applicable	Vapor Density	Hydrogen (Air = 1) : 0.069 Electrolyte (Air = 1) : 3.4	At STP		Evaporation Rate	Not Applicable
Solubility in Water	Electrolyte: 100% Soluble			Reactivity in Water	Electrolyte - water reactive (1)		
Appearance and Odor	Battery: Polypropylene or hard rubber case, solid. Lead: Gray, metallic, solid Electrolyte: Liquid, colorless, oily fluid; nuisance odor when hot or charging battery.						

SECTION 10 -- STABILITY AND REACTIVITY

Stability	Unstable ☐ Stable ☒	Conditions to Avoid	High temperatures - cases decompose at <320°F. Avoid overcharging and smoking, or sparks near battery surface and rapid overcharge.
Incompatibility (Materials to Avoid)	Sparks, Open flames, Keep battery case away from strong oxidizers.		
Hazardous Decomposition Products	An explosive hydrogen/oxygen mixture within the battery may occur during charging. Combustion can produce carbon dioxide (CO_2) and carbon monoxide (CO). Molten metals produce fumes and/or vapor that may be toxic or respiratory irritants.		
Hazardous Polymerization	May Occur ☐ Will Not Occur ☒	Do not overcharge.	

SECTION 11 -- TOXICOLOGICAL INFORMATION

GENERAL: The primary routes of exposure to lead are ingestion or inhalation of dust and fumes.

ACUTE:
INGESTION/INHALATION: Exposure to lead and its compounds may cause headache, nausea, vomiting, abdominal spasms, fatigue, sleep disturbances, weight loss, anemia, and pain in the legs, arms and joints. Kidney damage, as well as anemia, can occur from acute exposure.

CHRONIC:
INHALATION/INGESTION: Prolonged exposure to lead and its compounds may produce many of the symptoms of short-term exposure and may also cause central nervous system damage, gastrointestinal disturbances, anemia, and wrist drop. Symptoms of central nervous system damage include fatigue, headaches, tremors, hypertension, hallucinations, convulsions and delirium. Kidney dysfunction and possible injury has also been associated with chronic lead poisoning. Chronic over-exposure to lead has been implicated as a causative agent for the impairment of male and female reproductive capacity, but there is, at present, no substantiation of the implication. Pregnant women should be protected from excessive exposure. Lead can cross the placental barrier and unborn children may suffer neurological damage or developmental problems due to excessive lead exposure in pregnant women.

SECTION 12 -- ECOLOGICAL INFORMATION

In most surface water and groundwater, lead forms compounds with anions such as hydroxides, carbonates, sulfates, and phosphates and precipitates out of the water column. Lead may occur as sorbed ions or surface coatings on sediment mineral particles or may be carried in colloidal particles in surface water. Most lead is strongly retained in soil, resulting in little mobility. Lead may be immobilized by ion exchange with hydrous oxides or clays or by chelation with humic or fulvic acids in the soil. Lead (when in the dissolved phase) is bio-accumulated by plants and animals, both aquatic and terrestrial.

SECTION 13 -- DISPOSAL CONSIDERATIONS

Waste Disposal Methods	Lead-acid batteries are completely recyclable. Return whole scrap batteries to distributor, manufacturer or lead smelter for recycling. For information on returning batteries to Trojan Battery Company for recycling call 800-423-6569. For neutralized spills, place residue in acid-resistant containers with sorbent material, sand or earth and dispose of in accordance with local, state and federal regulations for acid and lead compounds. Contact local and/or state environmental officials regarding disposal information.

SECTION 14 -- TRANSPORT INFORMATION

U.S. DOT PROPER SHIPPING NAME: Batteries, wet, filled with acid
U.S. DOT HAZARD CLASS: 8
U.S. DOT ID NUMBER: UN 2794
U.S. DOT PACKING GROUP: III
U.S. DOT LABEL: Corrosive

IMO PROPER SHIPPING NAME: Batteries, wet, filled with acid
IMO REGULATION PAGE NUMBER: 8120
IMO U.N. CLASS: 8
IMO U.N. NUMBER: UN 2794
IMO PACKING GROUP: III
IMO LABEL: Corrosive
IMO VESSEL STOWAGE: A

IATA PROPER SHIPPING NAME: Batteries, wet, filled with acid
IATA U.N. CLASS: 8
IATA U.N. NUMBER: UN 2794
IATA PACKING GROUP: III
IATA LABEL: Corrosive

SECTION 15 -- REGULATORY INFORMATION

U.S. Hazardous Under Hazard Communication Standard:	Lead - YES Sulfuric Acid - YES Antimony - YES Arsenic - YES	
Ingredients Listed on TSCA Inventory:	YES	
CERCLA Section 304 Hazardous Substances:	Lead – YES	RQ: NA*

Sulfuric Acid – YES	RQ: 1000 pounds
Antimony - YES	RQ: 5000 pounds
Arsenic – YES	RQ: 1 pound

*Reporting not required when diameter of the pieces of solid metal released is equal to or exceeds 100 micrometers.

EPCRA Section 302 Extremely Hazardous Substance: Sulfuric acid - YES

EPCRA Section 313 Toxic Release Inventory:
Lead - CAS NO: 7439-92-1
Sulfuric Acid - CAS NO: 7664-93-9
Antimony - CAS NO: 7440-36-0
Arsenic - CAS NO: 7440-38-2

SECTION 16 -- OTHER INFORMATION

THE INFORMATION ABOVE IS BELIEVED TO BE ACCURATE AND REPRESENTS THE BEST INFORMATION CURRENTLY AVAILABLE TO US. HOWEVER, TROJAN BATTERY COMPANY MAKES NO WARRANTY OF MERCHANTABILITY OR ANY OTHER WARRANTY, EXPRESS OR IMPLIED, WITH RESPECT TO SUCH INFORMATION, AND WE ASSUME NO LIABILITY RESULTING FROM ITS USE. USERS SHOULD MAKE THEIR OWN INVESTIGATIONS TO DETERMINE THE SUITABILITY OF THE INFORMATION FOR THEIR PARTICULAR PURPOSES. ALTHOUGH REASONABLE PRECAUTIONS HAVE BEEN TAKEN IN THE PREPARATION OF THE DATA CONTAINED HEREIN, IT IS OFFERED SOLELY FOR YOUR INFORMATION, CONSIDERATION AND INVESTIGATION. THIS MATERIAL SAFETY DATA SHEET PROVIDES GUIDELINES FOR THE SAFE HANDLING AND USE OF THIS PRODUCT; IT DOES NOT AND CANNOT ADVISE ON ALL POSSIBLE SITUATIONS, THEREFORE, YOUR SPECIFIC USE OF THIS PRODUCT SHOULD BE EVALUATED TO DETERMINE IF ADDITIONAL PRECAUTIONS ARE REQUIRED.

Form MSDS Rev. 2/19/07

Battery Box Enclosure Calculations

According to the section 7.8 of the Solar Decathlon Building code:

Active
"Active ventilation shall be powered by continually operating DC brushless fan. The fan shall provide a minimum of 1 cfm (.47L/S) of air supply for each square foot of floor area in the battery enclose.

Our battery enclosure is 4 feet by 8 feet and there for has 32 square feet. We would use a fan of at least 32 cfm.

Passive
"The Vent shall discharge at least five feet away from the sources of air intake into the building and shall be sized to provide a minimum of 28 square inches of net free ventilating area"

Our battery enclosure would be at least 28 square inches.

Spill Containment Tray

Holds four Group 31, T105 or L16 batteries. The tray has enough capacity to hold one ruptured battery cell's spilled electrolyte. Fits on one PSR shelf. Molded acid resistant polyethylene plastic.

Model	Price
PSR-SCT	$29.00

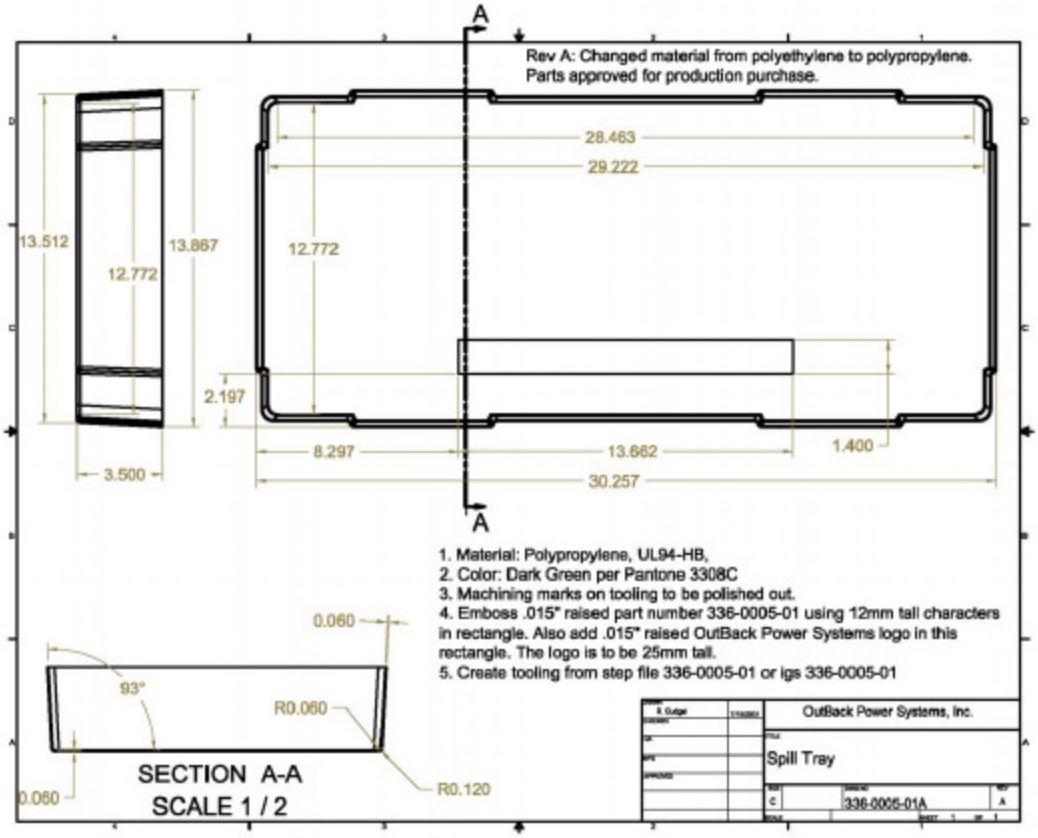

THE STANDARD IN PV MOUNTING STRUCTURES™

SunFrame®

Planning and Assembly

for Threaded Slot Rail

Installation Manual 808.1

Contents

UniRac welcomes input concerning the accuracy and user-friendliness of this publication. Please write to **publications@unirac.com.**

June 2006

Scope and installer responsibility

Please review this manual thoroughly before installing SunFrame Systems using threaded slot rails.

The installer is solely responsible for

- Complying with all applicable local or national building codes, including any that may supercede this manual;
- Ensuring that UniRac and other products are appropriate for the particular installations and are designed for the installation environment;
- Ensuring that the roof, its rafters, connections, and other structural support members can support the array under live load conditions;
- Ensuring that lag screws have adequate pull-out strength and shear capacities;
- Maintaining the waterproof integrity of the roof, including selection of appropriate flashing; and
- Ensuring safe installation of all electrical aspects of the PV array.

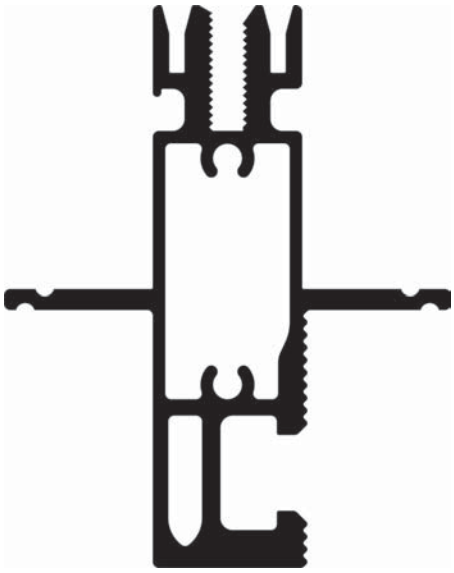

Figure 1.SunFrame threaded slot rail, cross section, actual size.

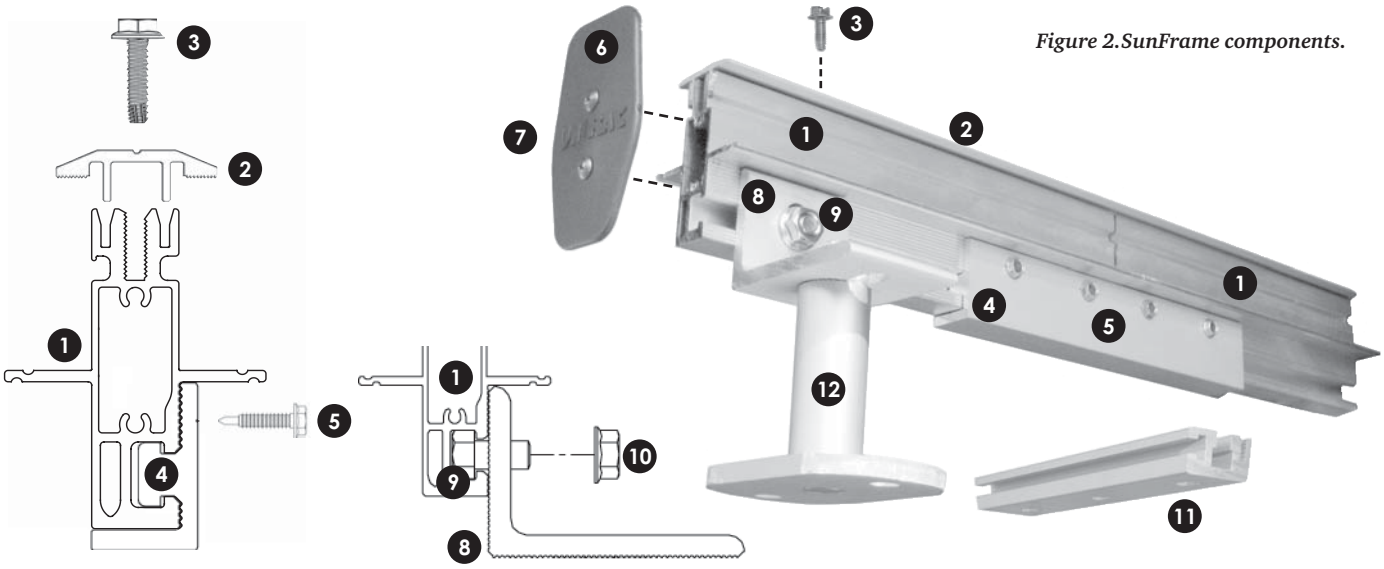

Figure 2.SunFrame components.

SunFrame® components

1. **Rail**—Supports PV modules. Use one per row of modules plus one. Shipped in 8- or 16-foot lengths. 6105-T5 aluminum extrusion, anodized (clear or dark bronze) to match PV module frame.
2. **Cap strip**—Secures PV modules to rails and neatly frames top of array. Lengths equals rail lengths. Cap strips are sized for specific PV modules. Shipped in 8- or 16-foot lenghs. Predrilled every 8 inches. 6105-T5 aluminum extrusion, anodized (clear or dark bronze) to match PV module frame.
3. **Cap strip screw** (¼-20, Type F thread cutting)—Use to secure each cap strip (and PV modules) to rail, one per predrilled hole. Use an additional end screw wherever a predrilled hole does not fall within 4 inches of the end of any cap strip segment. 18-8 stainless steel, clear or dark to match cap strip.
4. **Rail splice**—Joins rail sections into single length of rail. It can form either a rigid or thermal expansion joint. 8 inches long, predrilled. 6105-T5 aluminum extrusion, anodized (clear or dark bronze) to match PV module frame.
5. **Self-drilling screw** (No. 10 x ¾")—Use 4 per rigid splice or 2 per expansion joint. Galvanized steel.
6. **End caps**—Use one to neatly close each rail end. UV resistant black plastic.
7. **Truss-head sheet metal screw** (No. 8 x ⅝")—Use 2 per end cap to secure end cap to rail. 18-8 stainless steel; with black oxide coating to match end caps.
8. **L-foot**—Use to secure rails either through roofing material to rafters, to L-foot adjusting sliders, or to standoffs. Use no less than one L-foot per 4 feet of rail. 6105-T5 aluminum extrusion, anodized (clear or dark bronze) to match PV module frame.
9. **L-foot bolt** (⅜" x 1¼")—Use one per L-foot to secure rail to L-foot. 304 stainless steel.
10. **Flange nut** (⅜")—Use one per L-foot bolt. 304 stainless steel. Required torque: 30 to 35 foot-pounds.
11. **L-foot adjusting slider** (optional)—Use one beneath each L-foot or aluminum two-piece standoff, except in lowest row. 6105-T5 aluminum extrusion. Sliders allow easier alignment of rails and better snugging of PV modules between rails. Includes ⅜" x 1¼" bolt with flange nut for attaching L-foot or standoff shaft, and two ⅝" x 2½" lag bolts with flat washers for securing sliders to rafters.
12. **Flattop standoff** (optional)—Use if L-foot cannot be secured directly to rafter (with tile or shake roofs, for example). Sized to minimize roof to rail spacing. Use one per L-foot. **Two-piece** (pictured): 6105-T5 aluminum extrusion. Includes ⅜" x ¾" bolt with lock washer for attaching L-foot, and two ⅝" x 3½" lag bolts. **One-piece**: Service Condition 4 (very severe) zinc-plated welded steel. Includes ⅜" x 1¼" bolt with lock washer for attaching L-foot. **Flashings:** Use one per standoff. UniRac offers appropriate flashings for both standoff types.

Stainless steel hardware can seize up, a process called galling. To significantly reduce its likelihood, (1) apply lubricant to bolts, preferably an anti-seize lubricant, available at auto parts stores, (2) shade hardware prior to installation, and (3) avoid spinning on nuts at high speed. See Installation Supplement 910, Galling and Its Prevention, at www.unirac.com.

Installer supplied materials

Lag screw for L-foot—Attaches L-foot or standoff to rafter. Determine length and diameter based on pull-out values in Table 3 (page 8). If lag screw head is exposed to elements, use stainless steel. Under flashings, zinc plated hardware is adequate. *Note: Lag screws are provided with L-foot adjusting sliders and standoffs.*

Waterproof roofing sealant—Use a sealant appropriate to your roofing material.

Clamps for standing seam metal roof—See "Frequently Asked Questions . . ." (p. 16).

Planning your SunFrame® installations

When installing SunFrame threaded rail installations, note the following:

- This bulletin addresses only wind loads. Wind generally produces the maximum load factor affecting an installation. However, verify that other local conditions, such as snow loads and earthquake effects, do not exceed the wind loads. If any loading type does exceed wind loads, give precedence to that factor and consult a local professional engineer or your local building authority.
- The roof on which the SunFrame will be installed must be capable of withstanding the design dead load and design live load per footing, listed in Table 2 on pages 7–8.

1. Determine basic wind speed at your installation site.

For the United States, The Uniform Building Code (1997) supplies wind speeds in its chart, "Minimum Basic Wind Speeds in Miles per Hour," reproduced on page 5 on this manual. The International Building Code (2003) includes a similar chart, also reproduced on page 5.

If you need clarifications or further assistance or if your installation is outside the United States, consult a local professional engineer or your local building authority.

2. Determine exposure category of your installation site.

The Uniform Building Code* defines wind exposure categories as follows:

EXPOSURE B has terrain with buildings, forests or surface irregularities, covering at least 20 percent of the ground level area extending 1 mile (1.61 km) or more from the site.

EXPOSURE C has terrain that is flat and generally open extending ½ mile (0.81 km) or more from the site in any quadrant.

EXPOSURE D represents the most severe exposure in areas with basic wind speeds of 80 miles per hour (mph) (129 km/h) or greater and has terrain that is flat and unobstructed facing large bodies of water over 1 mile (1.61 km) in width relative to any quadrant of the building site. Exposure D extends inland from the shoreline ¼ mile (0.40 km) or 10 times the building height, whichever is greater.

The *International Building Code*† defines wind exposure categories as follows:

EXPOSURE B. Urban and suburban areas, wooded areas or other terrain with numerous closely spaced obstructions having the size of single-family dwellings or larger. Exposure B shall be assumed unless the site meets the definition of another type of exposure.

EXPOSURE C. Open terrain with scattered obstructions, including surface undulations or other irregularities, having heights generally less than 30 feet (9144 mm) extending more than 1,500 feet (457.2 m) from the building site in any quadrant. This exposure shall also apply to any building located within Exposure B–type terrain where the building is directly adjacent to open areas of Exposure C–type terrain in any quadrant for a distance of more than 600 feet (182.9 m). This category includes flat open country, grasslands and shorelines in hurricane-prone regions.

EXPOSURE D. Flat, unobstructed areas exposed to wind flowing over open water (excluding shorelines in hurricane-prone regions) for a distance of at least 1 mile (1.61 km). Shoreline in Exposure D include inland waterways, the Great Lakes and costal areas of California, Oregon, Washington and Alaska. This exposure shall apply only to those buildings and other structures exposed to the wind coming from over the water. Exposure D extends inland from the shoreline a distance of 1,500 feet (460 m) or 10 times the height of the building or structure, whichever is greater.

---

* ***Uniform Building Code 1997, Vol. 2, Structural Engineering Design Provisions, chap. 16, div. III, Wind Design, p. 7. The 2001 California Building Code uses the same definitions.***

† ***International Building Code 2003, chap. 16, "Structural Design," p. 290.***

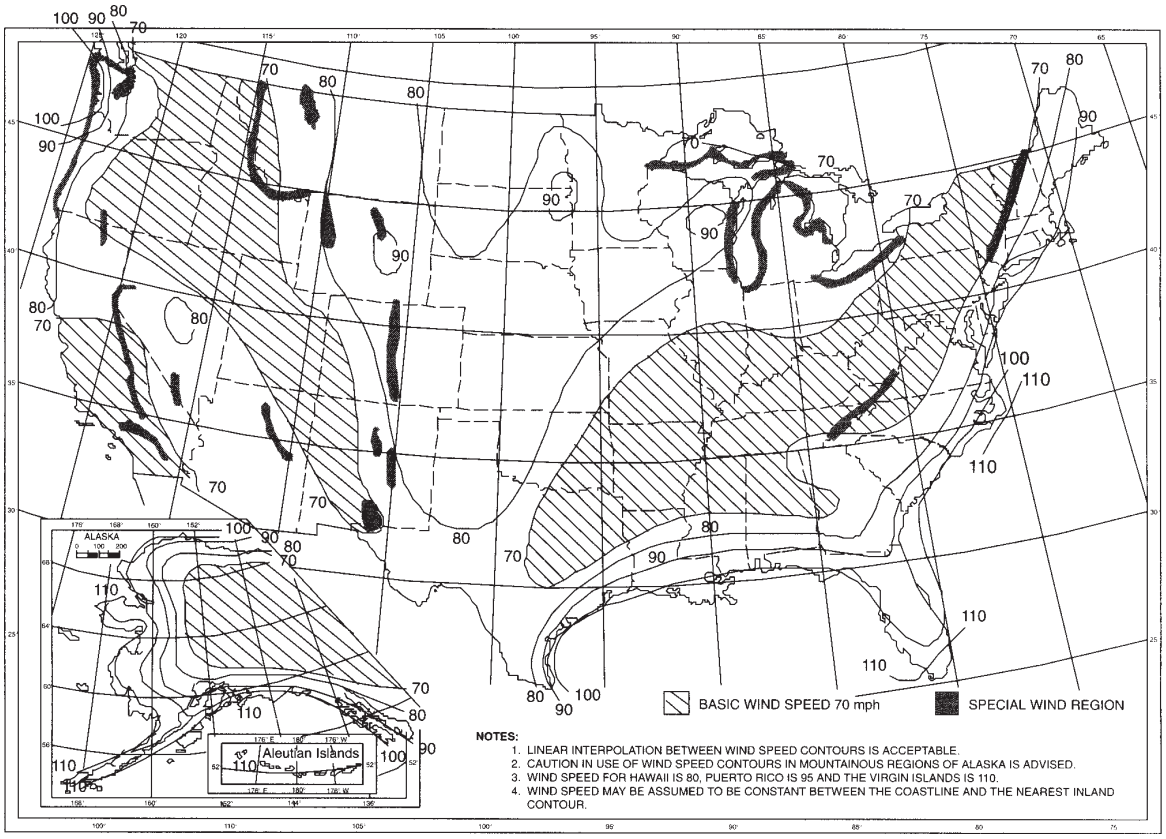

Figure 3. Minimum Basic Wind Speeds. Reproduced from Uniform Building Code 1997, Vol. 2, Structural Engineering Design Provisions, chap. 16, Div. III, Wind Design, Fig. 16.1, "Minimum Basic Wind Speeds in Miles per Hour," p. 36. The 2001 California Building code refers to the same map.

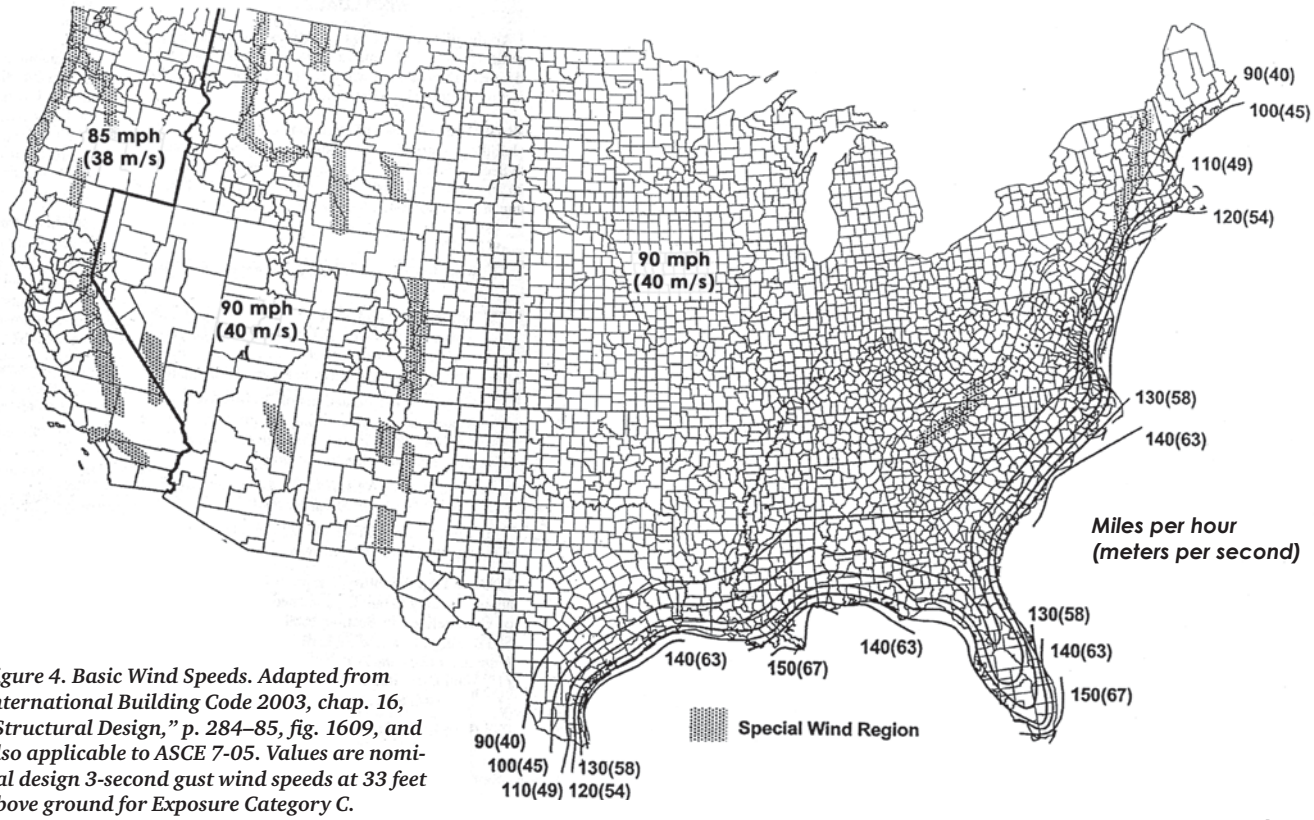

Figure 4. Basic Wind Speeds. Adapted from International Building Code 2003, chap. 16, "Structural Design," p. 284–85, fig. 1609, and also applicable to ASCE 7-05. Values are nominal design 3-second gust wind speeds at 33 feet above ground for Exposure Category C.

3. Determine the design wind pressure required for your installation.

Design wind pressure is the amount of wind pressure that a structure is designed to withstand, expressed here in pounds per square foot (psf). To determine the design wind pressure required for your installation, apply the following factors using Table 1:

- your basic wind speed (determined in step 1),
- your exposure category (determined in step 2), and
- the height of your roof above the ground.

If your values fall outside the range of the table, or if your design wind pressure exceeds 50 psf, consult UniRac, a professional engineer, or your local building authority.

Module manufacturers provide wind pressure rating for their modules. Confirm that they meet or exceed the wind speed rating for your installation. If in doubt, contact the module manufacturer.

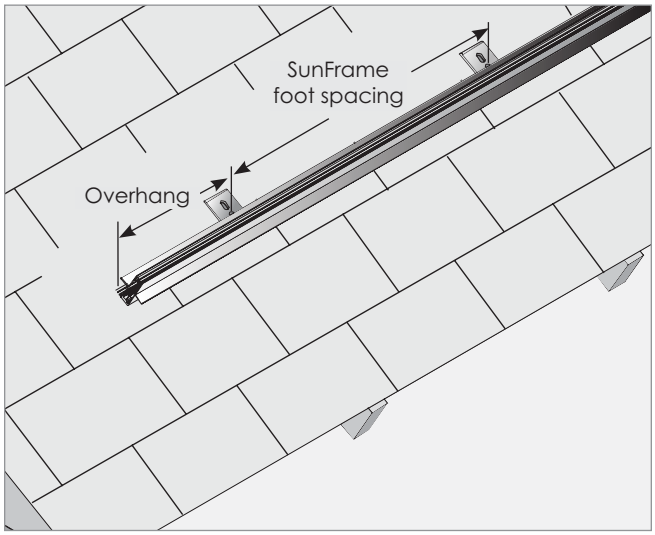

Figure 5. Foot spacing and overhang defined.

Table 1. Design wind pressure (psf) by wind speed and exposure category

	Basic wind speed (mph)						
	70	*80*	*90*	*100*	*110*	*120*	*130*
Category B							
15' roof height	10	13	17	21	25	30	35
20' roof height	11	14	18	22	27	32	38
25' roof height	12	15	19	24	29	35	41
30' roof height	12	16	21	25	31	36	43
Category C							
15' roof height	17	23	29	35	43	51	60
20' roof height	19	24	31	38	46	54	64
25' roof height	19	25	32	40	48	57	67
30' roof height	20	26	33	41	50	59	69
Category D							
15' roof height	23	30	38	46	56	67	78
20' roof height	24	31	39	48	58	70	82
25' roof height	25	32	41	50	60	72	84
30' roof height	25	33	42	51	62	74	87

*Source: These design wind pressure (P) values are based on the formula P = Ce * Cq * qs * Iw (UBC 1997, Vol. 2, Structural Engineering Design Provisions, Chapter 16, Div. III, Wind Design, p. 7). Assumptions: Iw = 1 and Cq = 1.3.*

4. Determine minimum design dead and live loads for standard rafter spacing.

Footing spacing refers to the space between L-feet (or standoffs, if used) along the same SunFrame rail (Fig. 5). Footing spacing may not exceed 48 inches. For the rafter spacing at your installation, consult Table 2 to determine your minimum design live loads and design dead loads per footing. Locate the manufacturer and model of the PV module that you plan to install and the rafter spacing at your installation site.

Read or interpolate live loads for the design wind pressure you determined in Step 3. For assistance on this point, consult a local professional engineer.

Verify that roof framing members have adequate capacity to support these design loads. If they do not, try a closer footing spacing. If the result is still not acceptable, relocate the array to a stronger area of the roof or strengthen the inadequate framing elements.

5. Verify acceptable rail end overhang.

Rail overhang (Fig. 5) must not exceed 50 percent of footing spacing. For example, if footing spacing is 48 inches, the rail overhang cannot be more than 24 inches. In this case, two footings can support a rail as long as 96 inches (48 inches between the footings and 24 inches of overhang at each end).

Table 2. SunFrame Loads (pounds per footing) at Standard Rafter Spacings

Your design point loads (capacity per footing) must be at or above the loads listed here. The installer is solely responsible for verifying that the roof can withstand these design point loads. For specifications based on design wind pressure values greater than 50 pounds per square foot, contact UniRac. In general, the minimum design live load equals the footing spacing (in feet) times the rail spacing (in feet) times the design wind presure from Table 1.

		Minimum design dead load	*Minimum design live load as a function of design wind pressure*			
			20 psf	*30 psf*	*40 psf*	*50 psf*
BP Solar BP3125						
Rafter/footing spacing:	24″	29	276	375	474	573
	32″	39	392	524	656	788
	48″	59	661	NA	NA	NA
BP Solar BP3150, -3160; -4175; BPSX160, -170						
Rafter/footing spacing:	24″	31	289	394	498	603
	32″	41	410	549	689	NA
	48″	61	687	NA	NA	NA
Evergreen EC102, EC110, EC115						
Rafter/footing spacing:	24″	30	288	392	496	600
	32″	41	408	546	685	NA
	48″	61	684	NA	NA	NA
GE Energy GEPV100M, -110M						
Rafter/footing spacing:	24″	30	272	369	466	563
	32″	40	387	516	645	774
	48″	59	653	NA	NA	NA
GE Energy GEPV173M						
Rafter/footing spacing:	24″	30	272	369	466	563
	32″	40	387	516	645	775
	48″	60	653	NA	NA	NA
Isofoton I-100						
Rafter/footing spacing:	24″	30	250	336	422	508
	32″	40	357	472	586	701
	48″	60	608	780	NA	NA
Isofoton I-150S						
Rafter/footing spacing:	24″	30	250	336	422	508
	32″	40	357	472	586	701
	48″	60	608	780	NA	NA
Kyocera KC130GT						
Rafter/footing spacing:	24″	31	266	360	453	547
	32″	41	379	504	629	753
	48″	62	641	NA	NA	NA
Kyocera KC170GT						
Rafter/footing spacing:	24″	28	245	330	415	499
	32″	38	351	464	577	690
	48″	56	599	768	NA	NA
Kyocera KC200GT						
Rafter/footing spacing:	24″	31	266	360	453	547
	32″	41	379	504	628	753
	48″	62	641	NA	NA	NA
Mitsubishi MF110EC3, MF120EC3						
Rafter/footing spacing:	24″	30	265	359	452	546
	32″	40	378	502	627	752
	48″	60	639	NA	NA	NA
Mitsubishi MF125A2LF, MF130EA2LF						
Rafter/footing spacing:	24″	28	239	321	403	484
	32″	37	343	452	561	670
	48″	55	586	750	NA	NA
Mitsubishi MF160B3, -165B3, -170EB3						
Rafter/footing spacing:	24″	31	288	391	495	599
	32″	42	408	546	684	NA
	48″	63	684	NA	NA	NA
Photowatt PW1650						
Rafter/footing spacing:	24″	29	239	320	401	482
	32″	39	343	451	559	667
	48″	58	586	749	NA	NA
Sanyo HIP-180BA3, -185BA3, -190BA3, -196BA3, -200BA3						
Rafter/footing spacing:	24″	27	248	335	421	508
	32″	36	355	470	586	701
	48″	55	605	778	NA	NA
Schott Solar ASE285, ASE300, ASE315						
Rafter/footing spacing:	24″	58	356	480	604	728
	32″	77	499	664	NA	NA
	48″	NOT APPLICABLE				
Sharp ND-072ERU/LU (72W nonrectagular end module), and ND-N2ECU (142W)						
Rafter/footing spacing:	24″	24	224	300	377	453
	32″	32	322	424	526	628
	48″	47	556	709	NA	NA
Sharp ND-L3EJEA (123W), ND-L5E1U (125W)						
Rafter/footing spacing:	24″	34	279	378	476	575
	32″	45	397	528	659	790
	48″	68	667	NA	NA	NA
Sharp ND-162U1, ND-167U3A						
Rafter/footing spacing:	24″	29	250	336	423	509
	32″	38	357	472	588	703
	48″	57	608	781	NA	NA
Sharp NE-170U1						
Rafter/footing spacing:	24″	33	289	392	495	599
	32″	44	409	547	685	NA
	48″	66	686	NA	NA	NA
Sharp ND-200U1, ND-208U1						
Rafter/footing spacing:	24″	33	298	406	513	621
	32″	45	421	565	709	NA
	48″	67	704	NA	NA	NA
Shell 165P, -PC, 175P, -PC						
Rafter/footing spacing:	24″	35	297	404	510	617
	32″	47	420	562	704	NA
	48″	70	703	NA	NA	NA

Continued on page 8

NA = not applicable. Never allow total load (live load plus dead load) to exceed 800 pounds per footing.

Table 2 (continued from p. 7). SunFrame Loads (pounds per footing) at Standard Rafter Spacings

Your design point loads (capacity per footing) must be at or above the loads listed here. The installer is solely responsible for verifying that the roof can withstand these design point loads. For specifications based on design wind pressure values greater than 50 pounds per square foot, contact UniRac. In general, the minimum design live load equals the footing spacing (in feet) times the rail spacing (in feet) times the design wind presure from Table 1.

	Minimum design dead load	Minimum design live load as a function of design wind pressure			
		20 psf	30 psf	40 psf	50 psf
SunPower SPR200, SPR210					
Rafter/footing spacing: 24″	32	286	388	490	593
32″	43	405	542	678	NA
48″	64	680	NA	NA	NA
SunWize SW115, SW120					
Rafter/footing spacing: 24″	30	269	363	458	553
32″	40	382	509	635	762
48″	61	646	NA	NA	NA
SunWize SW155L, SW165L					
Rafter/footing spacing: 24″	30	301	412	523	634
32″	40	425	573	721	NA
48″	60	710	NA	NA	NA
UniSolar ES62T					
Rafter/footing spacing: 24″	15	228	310	393	475
32″	20	328	438	548	658
48″	30	564	729	NA	NA
UniSolar US64					
Rafter/footing spacing: 24″	23	250	340	429	519
32″	30	358	477	597	716
48″	45	609	788	NA	NA
Yingli YL80, YL85					
Rafter/footing spacing: 24″	26	227	304	381	458
32″	35	327	430	532	635
48″	52	563	717	NA	NA

NA = not applicable. Never allow total load (live load plus dead load) to exceed 800 pounds per footing.

6. Ensure that live loads do not exceed pull-out limits.

Based on the characteristics of your roof truss lumber and the lag screws, consult Table 3 to determine the lag pull-out value per 1-inch thread depth. Compare that value to the minimum design live load per footing determined in step 4. Based on these values, determine the length of the lag-screw thread depth you require to resist the design live load. The lag pull-out value per footing must be greater than the footing design live load.

If your SunFrame rails require splices, see also "Footing and splicing requirements" (p. 11), before beginning your installation.

If your SunFrame requires standoffs, always use at least two lag screws to secure each standoff to the structural member. Bolt the L-foot to the standoff through the slot nearest the bend in the L-foot.

Table 3. Lag screw design pull-out values (pounds per embedded 1" thread depth) in typical roof truss lumber

	Specific gravity	Lag screw 5/16"	Lag screw 3/8"
Douglas Fir—Larch	0.50	266	304
Douglas Fir—South	0.46	235	269
Engelmann Spruce, Lodgepole Pine (MSR 1650 f & higher)	0.46	235	269
Hem—Fir	0.43	212	243
Hem—Fir (North)	0.46	235	269
Southern Pine	0.55	307	352
Spruce, Pine, Fir	0.42	205	235
Spruce, Pine, Fir (E of 2 million psi and higher grades of MSR and MEL)	0.50	266	304

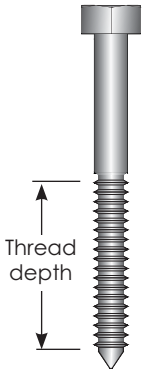

Sources: Uniform Building Code 1997, American Wood Council.

Notes: (1) Thread must be embedded in a rafter or other structural roof member. (2) Pull-out values incorporate a 1.6 safety factor recommended by the American Wood Council. (3) See Uniform Building Code for required edge distances.

Installing the array

Safe, efficient SunFrame installation involves three principal tasks:

A. Laying out the installation area and planning for material conservation.

B. Installing footings and rails, beginning with the *lowest* row and moving up the roof.

C. Placing modules and cap strips, beginning with the *highest* row and moving down the roof.

The following illustrated steps describe the procedure in detail. Before beginning, please note these important considerations.

Footings must be lagged into structural members. Never attach them to the decking alone, which leaves both the array and roof susceptible to severe damage.

For array widths or lengths greater than 32 feet, contact UniRac concerning thermal expansion issues.

Sample layout, illustrated in Figure 4

Assumptions: 12 modules (60″ x 36″), arranged in 3 rows of 4 modules

Array width = 144″ (36″ module width x 4 modules per row)

Array length = 180″ (60″ module length x 3 rows)
+ 3″ (1½″ end rail width x 2 rails)
+ 1½″ (¾″ between-module rail width x 2 rails)
= **184½″**

1. Laying out the installation area

Always install SunFrame rails perpendicular to rafters. (These instructions assume typical rafters that run from the gutter to the peak of the roof. If this is not the case, contact UniRac.) Rails are typically mounted horizontally (parallel to the lower edge of the roof), and *must* be mounted within 10 degrees of horizontal.

Leave adequate room to move safely around the array during installation. During module installation, you will need to slide one module in each row about a foot beyond the end of the rails on one side. Using the number of rows and the number of modules per row in your installation, determine the size of your array area following Figure 6.

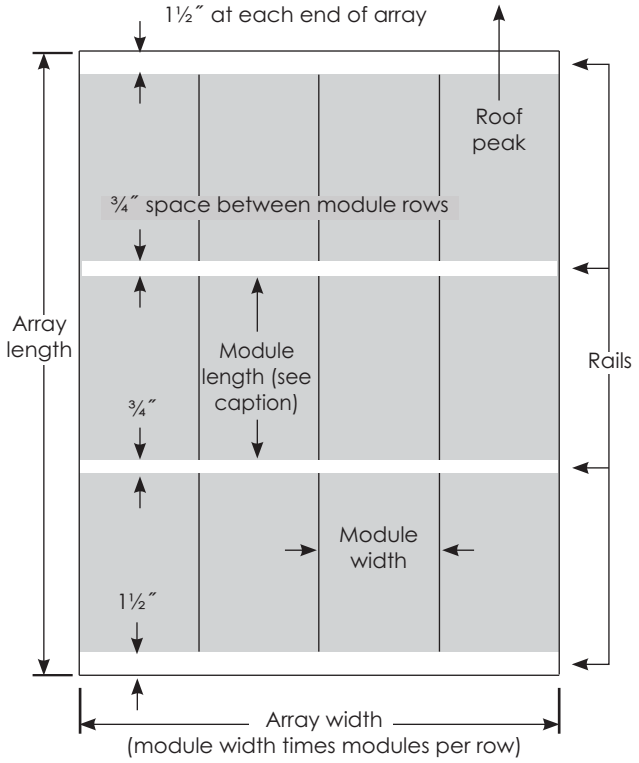

Figure 6. Installation area layout. Note: Module length is not necessarily measured from the edges of the frame. Some frames have lips. Others are assembled with pan-head screws. All such features must be included in module length.

2. Installing the lowest row of L-feet and rail

In the lowest row, it is not necessary to use L-foot adjusting sliders, even if you plan to use them in subsequent rows. Install L-feet directly onto low profile roofing material such as asphalt shingles or sheet metal. (For high profile roofs, such as tile or shake, use optional standoffs with flashing to raise L-feet. L-feet must be flush with or above the highest point of the roof surface.)

L-feet can be placed with the double-slotted side against the roof surface (as in Fig. 7) or with the single-slotted side against the roof (which increases air circulation beneath modules). Module-to-roof dimensions are listed on page 15 for both arrangements.

If you are using L-foot adjusting sliders, you must use the short side of the the L-foot against the roof in the first row. See Figure 9 below.

If you are using both L-foot adjusting sliders and standoffs, see the upper box on page 11.

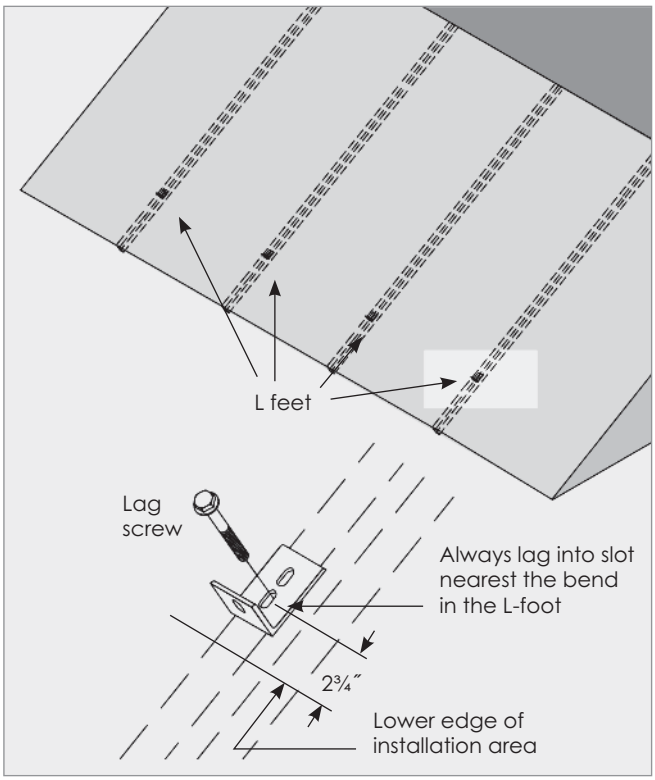

Figure 7. Placement of first L-foot row.

Install the first row of L-feet at the lower edge of the installation area (Fig. 8). Ensure feet are aligned by using a chalk line. (A SunFrame rail can also be used as a straight edge.) Position the L-feet with respect to the lower edge of the roof as illustrated in Figures 7 and 8.

Drill a pilot hole through roof into the center of rafter at each L-foot lag screw hole location. Apply weatherproof sealant into the hole and onto shafts of the lag screws. Seal the underside of the L-feet with a suitable weatherproof sealant.

Fasten the L-feet to the roof with the lag screws. ***If the double slotted sides of the L-feet are against the roof, lag through the slot nearest the bend in the L-foot (Figs. 7 and 8).***

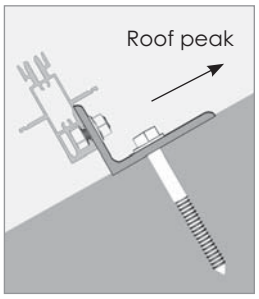

Figure 8. L-Foot orientation.

Cut the rails to your array width, being sure to keep rail slots free of roofing grit or other debris. If your installation requires splices, assemble them prior to attaching L-feet (see "Footing and splicing requirements," p. 11, and "Material planning for rails and cap strips," p. 13). Slide the $^{3}/_{8}$-inch mounting bolts into the footing slots. *If more than one splice is used on a rail, slide L-foot bolt(s) into the footing slot(s) of the interior rail segment(s) before splicing.*

Loosely attach the rails to the L-feet with the flange nuts. Ensure that rails are oriented with respect to the L-feet as shown in Figure 9. Align the ends of the rail to the edge of the installation area. Ensure that the rail is straight and parallel to the edge of the roof. Securely tighten the lag screws.

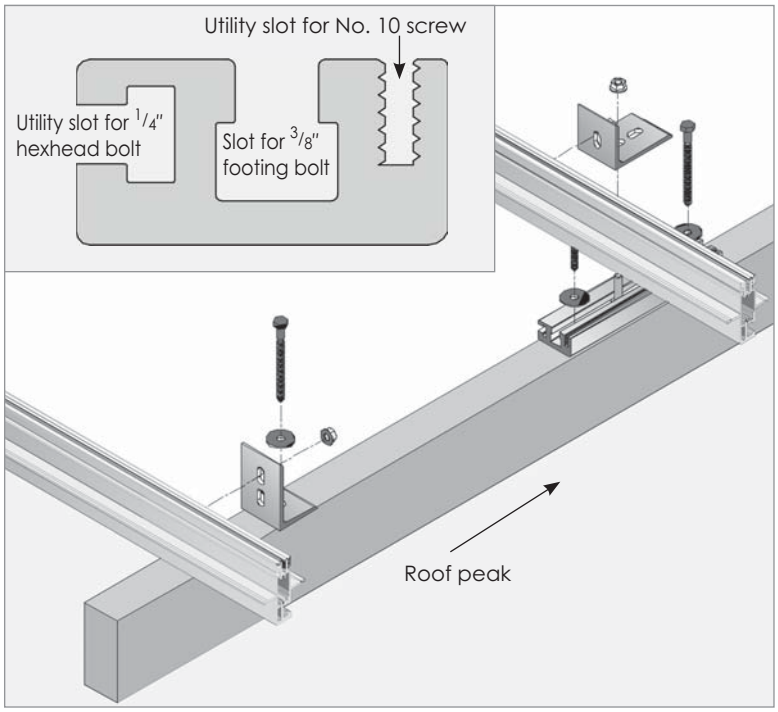

Figure 9. L-foot orientation in conjunction with L-foot adjusting sliders. The sliders include two utility slots to secure module wiring, combiner boxes, and other system components.

Using standoffs with L-foot adjusting sliders

Two-piece aluminum standoffs may be used with footing sliders, although flashings may not be available to cover the entire length of the slider. Use the bases of the standoffs only in the lowest row. In subsequent rows, attach the shaft of each standoff to the slider using the slider's 3/8-inch hex-head bolt. Note that L-feet are positioned long side up on the lowest rows and with long side down in subsequent rows—in the same manner as an installation with no standoffs.

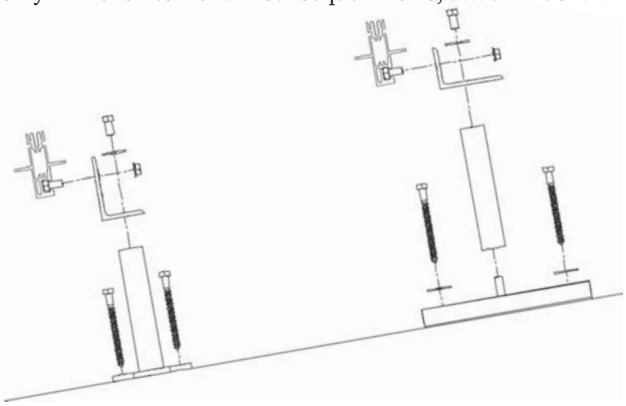

With standoffs of equal length, orient L-foot to compensate for height difference.

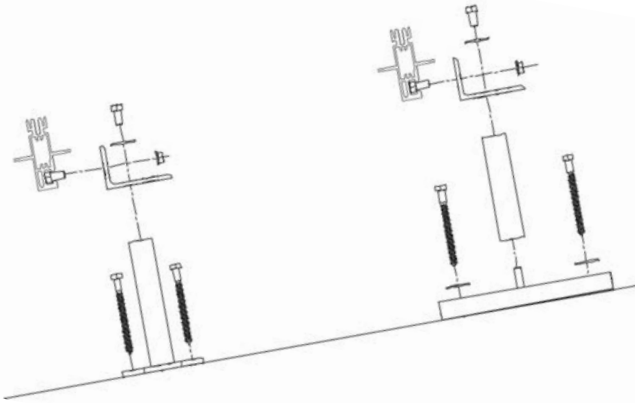

If the standoff supporting the lowest rail is 1 inch taller than the standoffs on the footing sliders, place both L-feet in the same orientation—either both long side up or both short side up.

This example assumes a rail seven times the length of the footing spacing (A). A splice may be located in any of the shaded areas. If more than one splice is used, be sure the combination does not violate Requirements 5, 6, or 7.

Footing and splicing requirements

The following criteria are required for sound installations.

While short sections of rail are structurally permissable, they can usually be avoided by effective planning, which also promotes superior aesthetics. See "Material planning for rails and cap strips" (p. 13).

The installer is solely responsible for ensuring that the roof and its structural members can support the array and its live loads.

For rail lengths exceeding 48 feet, thermal expansion joints may be necessary. Please contact UniRac.

1. Footing spacing along the rail (A in illustration above) is determined by wind loading (see pp. 5–8, especially step 4). Foot spacing must never exceed 48 inches.
2. Overhang (B) must be no more than half the length of the maximum footing spacing (A). For example, if Span A is 32 inches, Overhang B should not exceed 16 inches.
3. Do not locate a splice in the center third of the span between two adjacent feet.
4. In a spliced length of rail, all end sections must be supported by no less than two L-feet.
5. All interior rail sections must be supported by no less than one L-foot.
6. Interior rail sections supported by only one L-foot must be adjacent, on at least one side, to a rail section supported by no less than two L-feet.
7. Rail sections longer than half the footing spacing require no fewer than two L-feet.

Modules should always be fully supported by rails. In other words, modules should never overhang rails. This is especially critical when supporting the short side of a non-rectangular module. When a rail supports a pair of non-rectangular modules by themselves (right), it must be supported by at least two L-feet. The rail should be at least 14 and no more than 24 inches long, which will likely require a stringer between rafters to ensure proper footings.

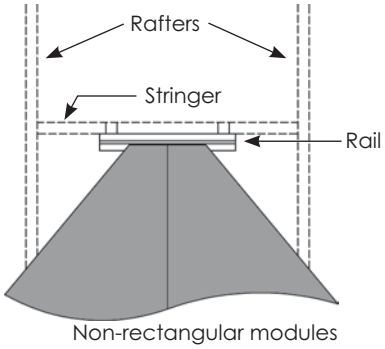

Non-rectangular modules

3. Laying out and installing the next row of L-feet

With L-feet only: Position the second row of L-feet in accordance with Figure 10. Ensure that you measure between the lower bolt hole centers of each row of L-feet. Install the second row of L-feet in the same manner and orientation as the first row, but leave the lag screws a half turn loose. Be aware of the set-up time of your sealant; the L-feet will not be fully tightened until Step. 4.

With L-foot adjusting sliders: Use a chalk line to mark the position of the slider center holes of the next row. The illustration below provides spacing guidelines. The length of the module (A in Fig. 11) includes any protrusions, such as lips or pan-head screws in its frame.

Attach and seal L-foot adjusting slider: Install lower lag first, *footing bolt next,* and upper lag last. Attach an L-foot with its short side up to each slider.

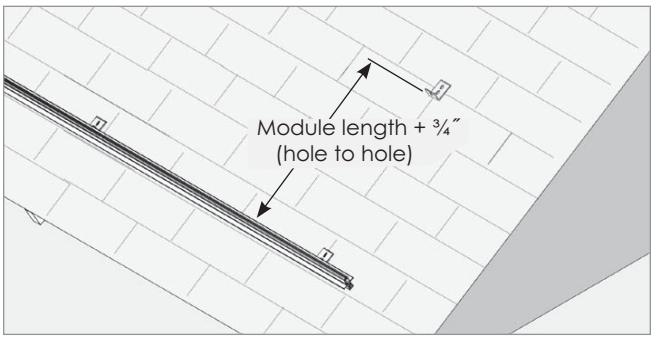

Figure 10. L-foot separation. See the note on module length in the caption of Figure 4 (p. 9).

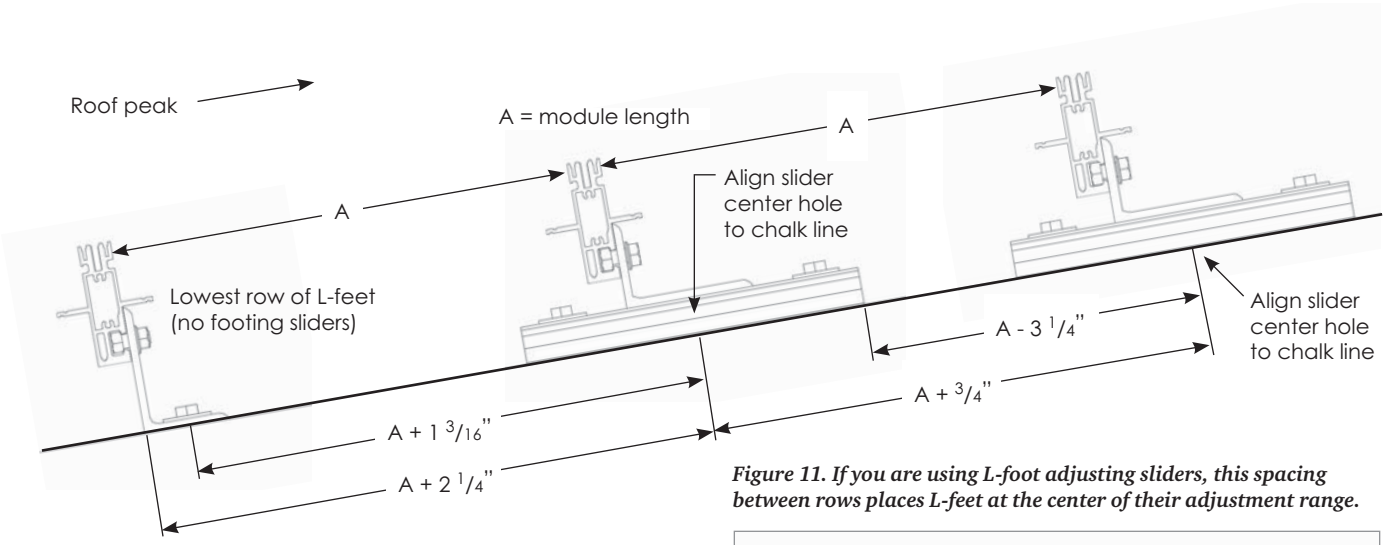

Figure 11. If you are using L-foot adjusting sliders, this spacing between rows places L-feet at the center of their adjustment range.

4. Installing the second rails

With L-feet only (Fig. 12): Install and align the second rail in the same manner and orientation as the first rail. After rail alignment, securely tighten the rail mounting bolts to between 30 and 35 foot-pounds.

Lay one module in place at one end of the rails, and snug the upper rail (Fig. 12) toward the lower rail, leaving no gap between the ends of the modules and either rail. (If pan-head screw heads represent the true end of the modules, be sure the screw heads touch the rails on both ends.) Securely tighten the lag screw on that end. Slide the module down the rails, snugging the rails and tightening the remaining lag screws as you go.

With L-foot adjusting sliders: Install rails on first and second rows of L-feet. Verify spacing by placing a module onto the rails at several points along the row. Adjust L-foot positions as needed.

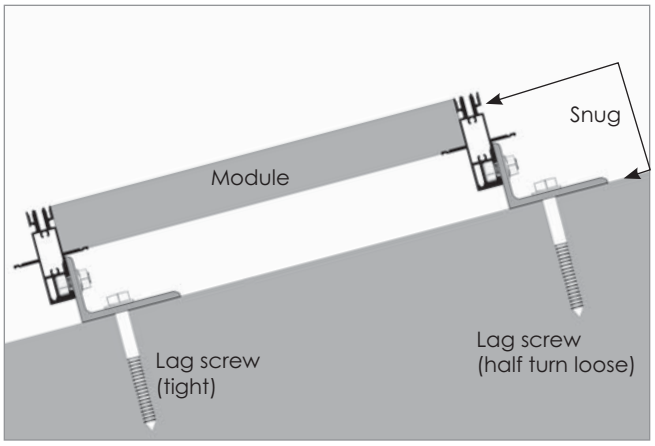

Figure 12. Position and secure top rail.

5. Installing remaining L-feet and rails

Install the L-feet and the rails for the remaining rows, following Steps 3 and 4. You may use the same module to space all the rows. When complete, confirm that:

- All rails are fitted and aligned.
- All footing bolts and lag screws are secure.
- The module used for fitting is resting (but not secured) in the highest row.

Material planning for rails and cap strips

Preplanning material use for your particular array can prevent structural or asthetic problems, particularly those caused by very short lengths of rail or cap strip. This example illustrates one approach.

Stuctural requirements for rails are detailed in "Footing and splicing requirements" (p.11). Structurally, cap strips require:

- A screw in every prepunched hole (which occur every 8 inches, beginning 4 inches from the ends of the rails).
- One screw 4 inches or less from the each end of every rail segment. Wherever there is no prepunched hole within 4 inches of an end of a segment, drill a $^1/_4$-inch hole 2 inches from the end of the segment and install a cap strip screw. (In most cases, you can avoid this situation with good material planning.)

Structural requirements always take precedence, but usually good planning can also achieve both material conservation and superior aesthetics. This example conserves material and achieves two specific aesthetic goals:

- Cap strip screws must align across the rails.
- End screws must be equidistant from both sides of the array.

The example assumes an array of three rows, each holding five modules 41 inches wide. Thus, four 205-inch rail assemblies and cap strip assemblies need to be cut and spliced from 192-inch sections of rail and cap strip. The example illustrates one means of doing so, without violating structural requirements or aesthetic goals.

Rail segments come from five 192-inch lengths, lettered A thru E. Rail A, for example, is cut into two 96-inch segments, with one segment spliced into each of the first two rails. Similarly, five 192-inch cap strips are designated V through Z.

All cap strip segments are cut at the midpoint between prepunched screw holes. For each rail, start with the cap strip segment that crosses the array center line, and position over the center line so that the appropriate holes are spaced equally on either side.

Position each cap strip onto its rail and mark its trim point. Remove and trim before final mounting.

Preliminary footing and splice positions must be checked against structural requirements in "Footing and splicing requirements" (p.11). In this example, the center of the array is offset 2 inches from the center rafter. This prevents rail splices BD (3rd rail) and CE (4th rail) from falling too close to the center of the spans between footings (Requirement 3, p. 11). Because footings are not visible from ground level, there is negligible aesthetic loss.

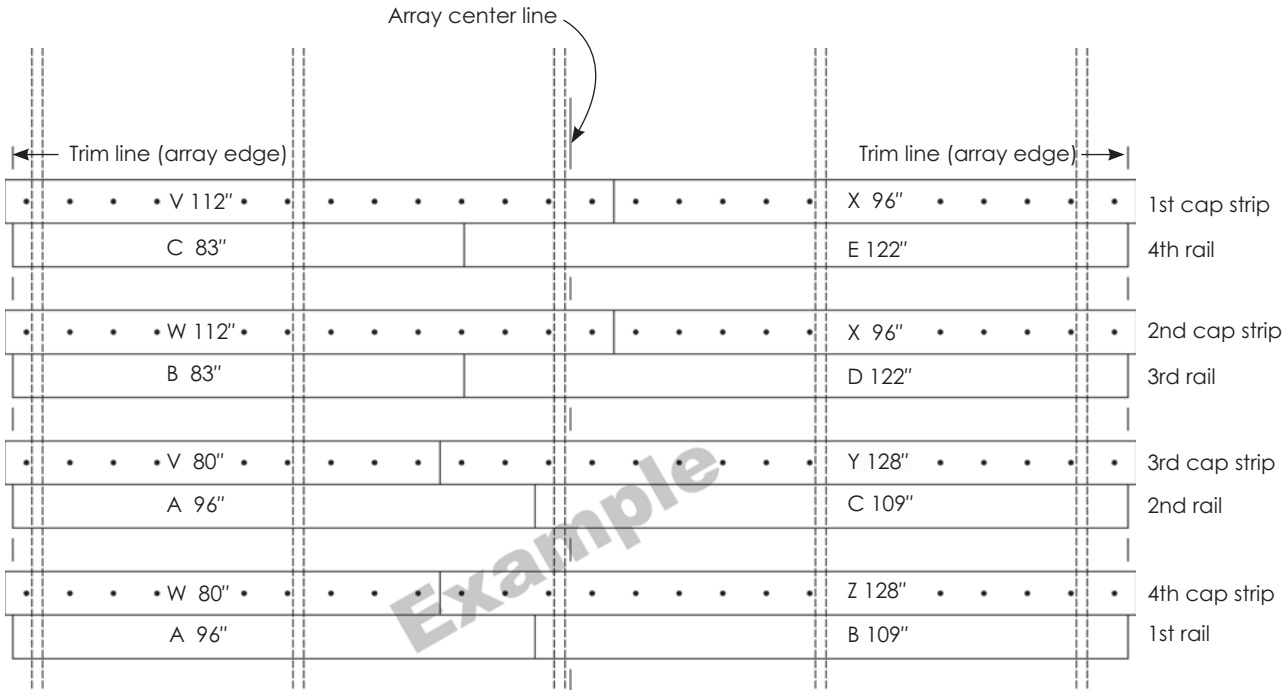

Usable remainder: D, 70"; E, 70"; Y, 64"; Z, 64"

6. Securing the first module

Gather sufficient lengths of cap strip to cover the length of the first rail. For maximum visual appeal and material conservation see "Material planning for rails and cap strips" (p. 13).

Slide the first module into final position at one end of the array. Lay the remaining modules in the top row, leaving a gap about a foot wide between the first and second modules (Fig. 13).

The temporary gap allows the installer to place one of his feet between modules. He can access the section of the cap strip he needs to secure while leaning toward the peak of the roof. For the time being, the last module may overhang the rail by up to one third its width.

Attach the end of the cap strip with the cap strip screws (Fig. 13, inset), so that the upper end of the first module is secure.

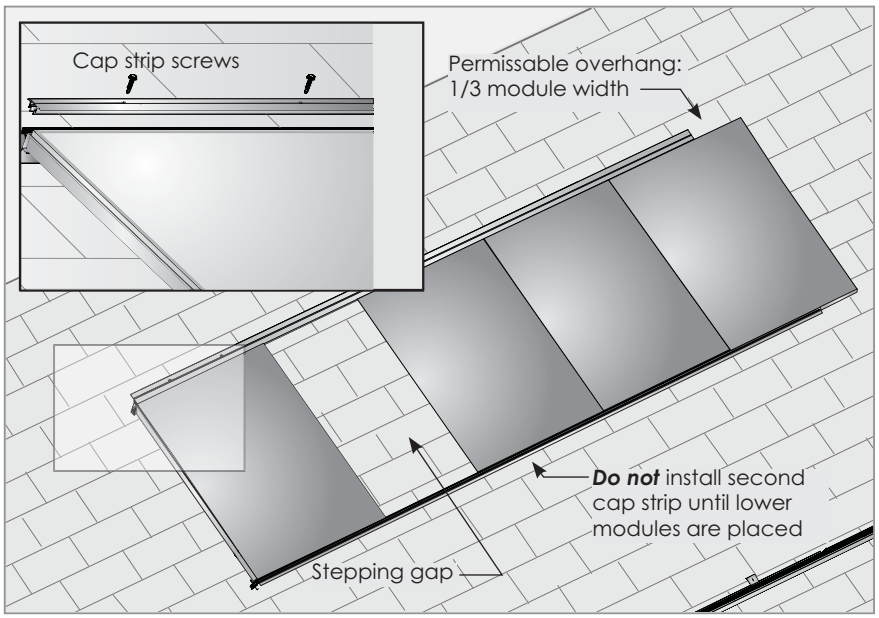

Figure 13. Begin cap strip installation.

The structural integrity of your array requires that cap strip screws fully engage the threaded rail. Use the cap strip screws supplied with your cap strips. Any substitute screws must be ¼-20 Type F thread cutting (18-8 stainless steel) and the correct length. See Table 4 (pg. 15) to match screw length to the size cap strip in your installation.

Every cap strip segment must have a cap strip screw 4 inches or less from each end. If the nearest predrilled hole falls more than 4 inches from any end, drill a ¼-inch hole 2 inches from the end and install an additional screw.

Wherever it is necessary to make a new cap strip hole, drill a ¼-inch hole before installing the cap strip screw.

7. Installing the remaining modules in the top row

Slide the next module into final position and install the screws to secure it (Fig. 14). For a neat installation, use cable ties to attach excess wiring to the rail beneath the flanges. UniRac's cable ties can be attached to the SunFrame rail by drilling a ¼-inch hole in the rail and pushing the end of the tie into the hole.

Continue the process until all modules in the top row are in final place and secured from the top. When complete, every prepunched hole in the cap strip will be secured by a screw, and the top end of the first row of modules will be secure.

8. Installing the remaining modules row by row

Repeat Steps 6 and 7 for the remaing rows (Fig. 15). Each subsequent cap strip will secure the tops to the modules being installed and the bottoms of the modules in the row above.

Place the final cap strip in the lowest rail, securing the bottom of the lowest module row.

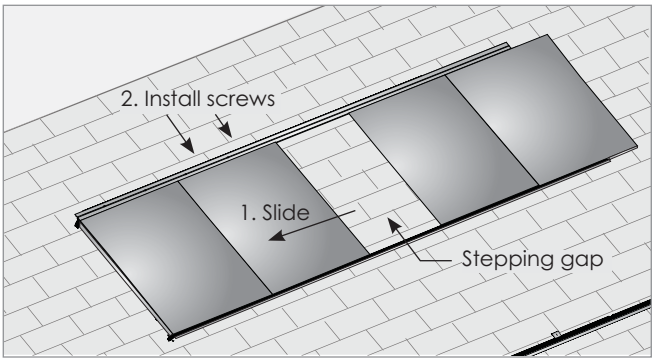

Figure 14. Position and secure modules one by one.

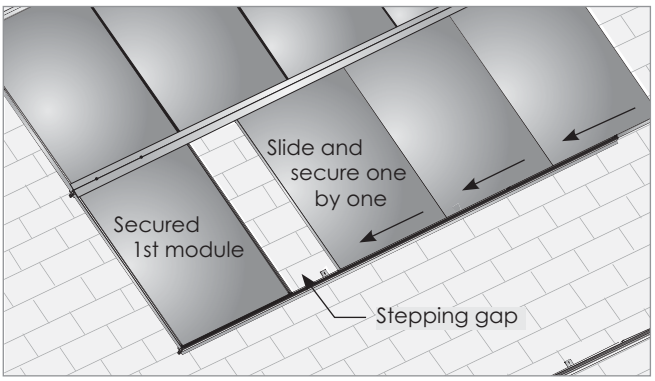

Figure 15. As modules slide into place, the stepping gap shifts, always allowing access to the section of cap strip being secured.

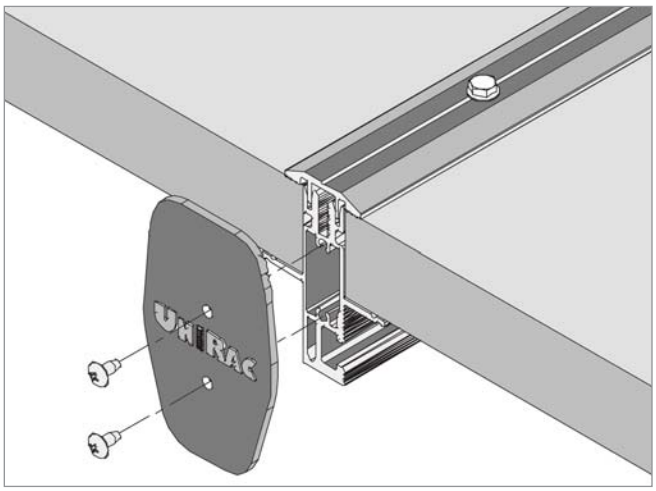

Figure 16. End cap installation.

9. Installing the end caps

Attach the end caps to the ends of the rails by securing with the truss head sheet metal screws provided (Fig. 16).

Table 4: PV module, cap strip, and cap strip screw compatibility

To ensure code compliance and a structurally sound array, cap strip sizes and cap strip screw lengths must be compatible with the PV modules in your installation. All cap strip screws must be ¼-20 Type F thread cutting (18-8 stainless steel).

Module thickness or type		*Cap strip*		*Required screw*
inches	*mm*	*cross section*	*Cap strip size*	*length (inches)*
1.34–1.42	34–36		C	¾"
1.50–1.57	38–40		D	¾"
1.77–1.85	45–47		F	1¼"
1.93–2.01	49–51		E	1¼"
Sharp lipped modules			G	1"
Sanyo lipped modules			H	¾"

Frequently asked questions about standoffs and roof variations

How high above the roof is a SunFrame array?

The answer depends on the orientation of your L-feet and the length of your standoffs, if used. See the illustration appropriate to your installation.

How can I seal the roof penetration required when standoffs are lagged below the roofing material?

Many types and brands of flashing can be used with SunFrame. UniRac offers a Oatey® "No-Calk" flashings for its steel standoffs and Oatey® or UniRac flashings for its aluminum two-piece standoffs. See our SunFrame Pro-Pak Price List.

How do I attach SunFrame to a standing-seam metal roof?

A good solution comes from Metal Roof Innovations, Ltd. (MRI). It manufactures the S-5!™ clamp, designed to attach a wide variety of products to most standing-seam metal roofs. It is an elegant solution that eliminates flashings and penetrations altogether.

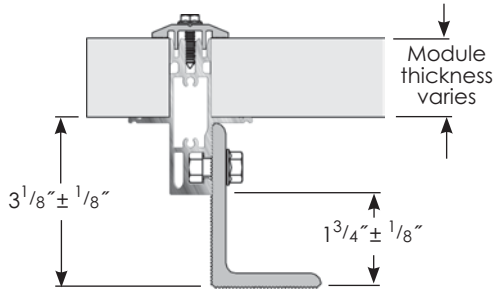

SunFrame L-feet will mount to the top of the S-5! clamps with the 3/8-inch stainless steel bolt provided with the S-5! See www.s-5solutions.com for different clamp models and details regarding installation.

When using S-5! clamps, make sure that there are enough clamp/L-feet attachments to the metal roof to meet the Metal Roof Manufacturers' and MRI specifications regarding wind loads, etc.

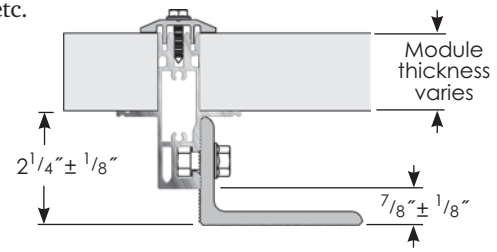

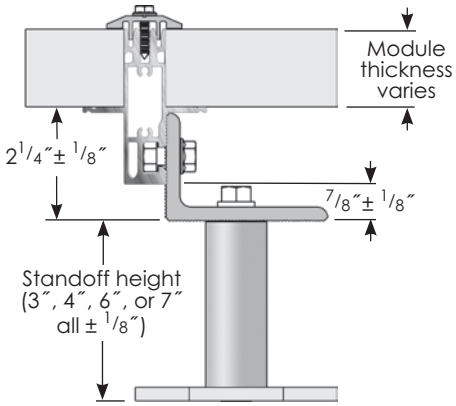

10 year limited Product Warranty, 5 year limited Finish Warranty

UniRac, Inc., warrants to the original purchaser ("Purchaser") of product(s) that it manufactures ("Product") at the original installation site that the Product shall be free from defects in material and workmanship for a period of ten (10) years, except for the anodized finish, which finish shall be free from visible peeling, or cracking or chalking under normal atmospheric conditions for a period of five (5) years, from the earlier of 1) the date the installation of the Product is completed, or 2) 30 days after the purchase of the Product by the original Purchaser ("Finish Warranty").

The Finish Warranty does not apply to any foreign residue deposited on the finish. All installations in corrosive atmospheric conditions are excluded. The Finish Warranty is VOID if the practices specified by AAMA 609 & 610-02 – "Cleaning and Maintenance for Architecturally Finished Aluminum" (www.aamanet.org) are not followed by Purchaser. This Warranty does not cover damage to the Product that occurs during its shipment, storage, or installation.

This Warranty shall be VOID if installation of the Product is not performed in accordance with UniRac's written installation instructions, or if the Product has been modified, repaired, or reworked in a manner not previously authorized by UniRac IN WRITING, or if the Product is installed in an environment for which it was not designed. UniRac shall not be liable for consequential, contingent or incidental damages arising out of the use of the Product by Purchaser under any circumstances.

If within the specified Warranty periods the Product shall be reasonably proven to be defective, then UniRac shall repair or replace the defective Product, or any part thereof, in UniRac's sole discretion. Such repair or replacement shall completely satisfy and discharge all of UniRac's liability with respect to this limited Warranty. Under no circumstances shall UniRac be liable for special, indirect or consequential damages arising out of or related to use by Purchaser of the Product.

Manufacturers of related items, such as PV modules and flashings, may provide written warranties of their own. UniRac's limited Warranty covers only its Product, and not any related items.

1411 Broadway NE, Albuquerque NM 87102-1545 USA • 505.242.6411 • Fax 505.242.6412

Apricus Solar Collector General Specifications

Manifold Casing Material	Aluminium (grade 3A21)
Frame Material	1.5mm 304 Stainless Steel
Header Pipe Material	99.93% pure Copper & lead free 45% silver brazing
Insulation	Compressed Glass Wool - K = 0.043W/mK
Rubber Seals and Rings	HTV grade silicone rubber
Optimal installation angle	20-70º Vertical, -5º to +5º Horizontal
Maximum Operating Pressure	8bar - 116psi
Optimal flow rate	0.1L/min/tube - 0.026G/min/tube
Performance Data (SPF)	Conversion Factor: ho = 0.717 Loss Coefficients: a1 = 1.52, a2 = 0.0085

Model Specifications

Model	AP-Demo	AP-10	AP-20	AP-22	AP-30
Overall Length (mm / inch) 1	660 / 25.9"	1980 / 77.9"			
Overall Width (mm / inch)	376 / 14.8"	796 / 31.3"	1496 / 58.8"	1636 / 64.4"	2196 / 86.4"
Overall Height (mm / inch)	156 / 6.1" (including flush roof mounting frame)				
Absorber Area (m^2 / ft^2) 2	0.08 / 0.86	0.8 / 8.6	1.6 / 17.2	1.76 / 18.9	2.4 / 25.8
Fluid Capacity (ml / ounces)	190 / 6.4	290 / 9.8	510 / 17.2	550 / 18.6	833 / 28.2
Gross Area (m^2 / ft^2) 3	0.25 / 2.67	1.57 / 16.95	2.96 / 31.8	3.24 / 34.8	4.35 / 46.8
Dry Weight (kg / pounds)	8 / 18	35 / 77	64 / 140	71 / 157	95 / 209

1. Length and width do not include the inlet and outlet which protrude from either the rear or ends of the manifold.
2. Absorber area calculated as: D x L x N where:
   D = diameter of the absorber tube, in this case 0.047m
   L = exposed length of tube: For 1.8m tubes this is 1.72m
   N = number of tubes (4, 10, 20, 22, 30)
   Eg. 0.047 x 1.72 x 20 = 1.6m² absorber area (1m² = 10.76ft²)
3. Calculated simply as overall length (including frame) x overall width.
4. AP Models are named as follows:
   AP(Manifold Casing Colour)(Port Location) - (Tube Number)
   Manifold Casing Material: K = Black, S = Silver
   Port Location: R = Rear, E = End
   Tube Number: 4, 10, 20, 22, 30
   Eg. APKR-20 = black rear port 20 tube manifold.

Note: Depending on region certain colour/port options may not be available.

For more information on this or any other Apricus products, please contact your local Apricus distributor.

Solar Collector Links

Introduction

Main Features

Technical Information

Key Components

Warranty

Featured Installation

Pole Installation in Canada!

Apricus has obtained ISO9001:2000 Certification

Quality System™

Quality Endorsed Company

ISO 9001 Lic23284

SAI Global

The AP solar collector design incorporates 6 main components:

1. Evacuated Tubes
2. Copper Heat Pipes
3. Copper Header Pipe
4. Glass Wool Insulation
5. Manifold Casing
6. Mounting Frame

Evacuated Tube & Heat Pipe

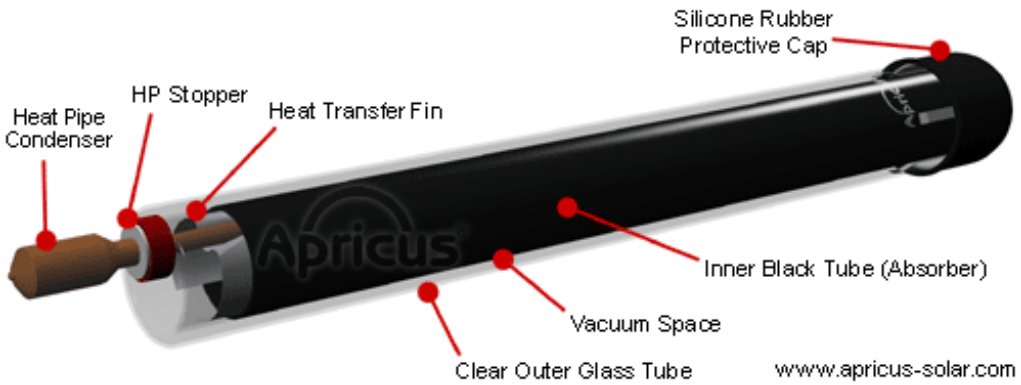

The heat pipe, heat transfer fin and evacuated tube shown above form the heat absorption and transfer portion of the solar collector. Unlike some other evacuated tube heat pipe designs, Apricus evacuated tubes and heat pipes are not joined or fused together. This allows the two components to move independently, allowing for building movement and the expansion and contraction that occurs daily in a solar system. For more information about evacuated tubes click here, heat pipes click here.

Copper Header Pipe

The AP solar collector's header is designed to providing excellent heat transfer and corrosion resistance while using a simple"plug in" installation method.

The key features are as follows

1. Heat pipe ports provide simple plug in installation while still ensuring tight contact with the heat pipes for optimal heat transfer. Thermal heat conduction grease is applied to the heat pipes condenser prior to insertion to further enhance heat transfer. Given the high temperatures that the manifold is exposed to, the expansion of the heat pipe condenser and "setting" of the heat conduction paste results in the heat pipe being firmly held in place. This ensures excellent heat transfer for the life of the solar collector. As the heat pipe is extremely reliable and durable, there is no need to ever remove or replace the heat pipe, even if changing a solar tube.

Solar Collector Links

Introduction

Main Features

Technical Information

Key Components

Warranty

Featured Installation

Pole Installation in Canada!

Apricus has obtained ISO9001:2000 Certification

Quality System ™

Quality Endorsed Company

ISO 9001 Lic23284

SAI Global

2. The twin header pipes are molded to match the shape of the heat pipe ports in order to maximise contact area. In addition, the heat pipe ports are brazed to the twin header pipes providing a direct metallic connection.
3. The "contoured" header pipe design produces turbulent water flow enhancing heat transfer.
4. The header pipes are brazed using Ag45CuZn, lead free brazing rods, which are suitable for potable water and provide a strong, quality joint.
5. Available in rear port or end port inlet/outlet configuration.
6. 8mm ID copper temperatures sensor ports at both the inlet and outlet which are brazed directly to the header pipe for accurate temperature measurements.

Glass Wool Insulation

Glass wool is a very popular insulation material, used throughout the world in many high temperature insulation applications. Glass wool is also non-flammable, and so an excellent choice for a high temperature solar thermal solar collector. One key advantage of glass wool is that it can be molded into any shape. Via a process similar to baking a cake, the glass wool is "cooked" at high temperatures matching perfectly the shape of the header and the evacuated tubes.

Glass wool is:
- An excellent insulator K = 0.043W/mK
- Non-flammable (can withstand temperatures up to 300°C / 572°F)
- Made from 90% recycled glass
- Very Lightweight (~70kg/m^{3} density - 4.36p/ft^{3})

Manifold Casing

The manifold casing serves two main purposes, protecting the header and glass wool insulation from the elements, and making the collector attractive and neat. The casing is made from corrosion resistant grade alumininium and is available in a matt black or silver finish.

Mounting Frame

The Apricus Solar Collector can be installed on most roof surfaces, and a full range of roof angles. A standard frame is provided with all collectors, and additional frame kits are avaiable to suit most common installations. The various frame components can also be used to install on most other non-standard surfaces.

The frames are designed to withstand high speed winds; the tubes provide minimal resistance due to the round shape. Attachment points must also be strong enough to withstand significant pull forces that will occur during strong winds.

Standard Frame
For flush installation on a pitched roof, the standard mounting frame is used. The front tracks are secured to a tiled roof using the stainless steels straps, rubber pads or round feet, depening on the roof's surface.

Low, Mid & High Angle Roof Frames

Frame kits are available which increase the angle of the solar collector, from as little as 12° to as high as 53°, allowing the collector to be installed at an optimal angle. The frames kits even allow mounting on a wall.

Click here to see examples of various installation formats.

All frame components, including bolts, washers and nuts are made from stainless steel. The

Solar water heater performance is often presented as a graph, or set of three performance variables. Values may be provided based on gross area, aperture area or absorber area. In Europe, aperture or absorber is often used, in the US, gross area is often used. It doesn't really matter which values is used, as long as you use the correct value. ie. Don't use absorber area when using performance values based on gross area.

To adjust from one to the other, multiply by the size difference.
ie. If absorber area = 0.6m2 & gross area = 1.1m2 then (1.1/0.6 = 1.83), so multiply the performance factorsby 1.83 to convert from gross to absorber.

The three performance variables for the Apricus solar collector as provided by the SPF testing laboratory in Switzerland (SPF report C632LPEN) are as follows (for metric calculations, based on absorber area):

Conversion Factor: h**0 = 0.717**
Loss Coefficient: a1 = 1.52 W/(m^{2}K)
Loss Coefficient: a2 = 0.0085 W/(m^{2}K^2)

As well as the three performance variables shown above, insolation level (G) in Watts/m^2, ambient temperatures (Ta) and average manifold temperature (Tm) must be know. These values give the value **x**, also sometimes presented as T*m, used in the formula below.

$$\eta(x)=\eta o-a1.(X)-a2.G.(X)^2 \qquad [x=(Tm-Ta)/G]$$

(other slightly different forms of this formula are used, but provide the same result)

How to use the formula?

Based on the ambient temperature, average manifold temperature and insolation level, firstly calculate the value for X.

Eg. At 2:40pm; ambient temperature of 25°C (77°F); average water temp [(T_{inlet}+T_{exit})/2] of 50°C (122°F); insolation level of 800Watts/m^2 (252Btu/ft^2).

x = (50-25)/800 = 0.03125

Now enter all the values into the formula:

h**(x) = 0.717 - (1.52*0.03125) - (0.0085*800*0.03125^2)**

h**(x) = 0.717 - 0.0475 - 0.0066 = 0.663**

The solar conversion efficiency for that specific point in time and set of environmental conditions is 66.3%. That is: 66.3% of the energy provided by the sun is actually used to heat the water.

Technical Info

Evacuated Tubes

Heat Pipes

Efficiency Calculations

Efficiency

1 - Performance Basics

2 - Understanding IAM

3 - IAM Adjustment

4 - Collector Comparison

Based on the assumption that those three environmental factors (G, Tm and Ta) are stable for a period of one hour, then 800 x 0.663 = 530.4 Watts of energy per m² of absorber area will be used to heat the water (168Btu/ft²). 530.4Watts is equivalent to 456kcal, which could heat 100L of water by 4.56°C (20 Gallons by 10.9°F)

Below is a graph showing the performance curves for the Apricus solar collector at three different insolation levels, from 0 to 80°C delta-t. In most cases the delta-t values will be in the range of 20-50°C, with higher values present for high temperature heating such a for absorption cooling applications, or during very cold weather. Except for when the delta-t is zero, conversion efficiency is dependent on solar insolation levels, with higher insolation yielding greater levels of solar conversion.

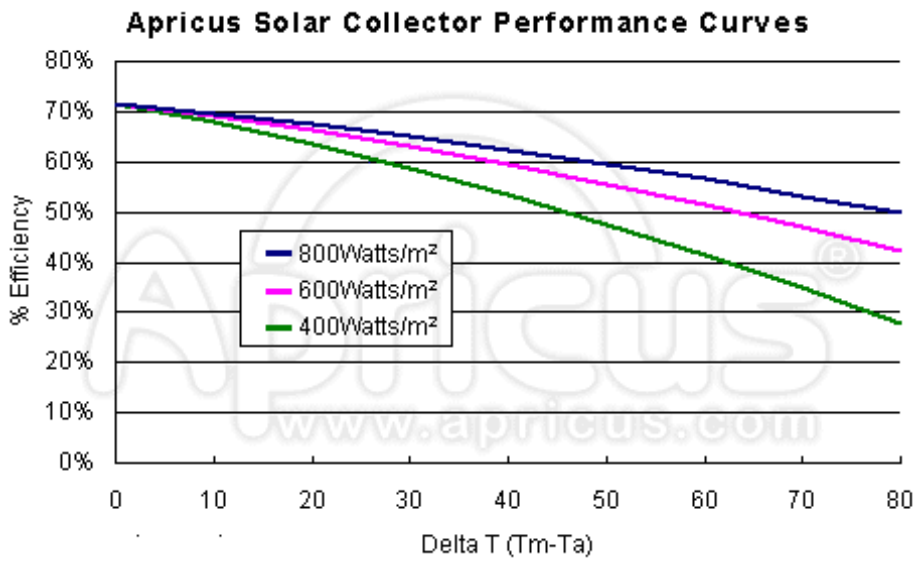

In reality ambient temperature will fluctuate, and the manifold temperature will gradually increase as the water is heated. Furthermore insolation levels may fluctuate with intermittent cloud cover. In order to more accurately calculate energy output per day/month/year a more complete set of environmental data must be considered and many (hourly) performance calculations throughout the day taken. Your local Apricus distributor can provide estimates of average monthly and annual performance, heat output and thus solar contribution for your location.

One factor which is not considered in the straight performance calculations outlined above, is the affect of transversal or longitudinal IAM values (Incidence Angle Modifier). Considering IAM is important as for Apricus solar collectors it accounts for as much as an additional 25% in total daily heat output values. Please read the following section to learn more about IAM.

Site Map

Performance meansurements are normally taken with the solar insolation level measured perpendicular to the collector plane (ie. facing the same direction as the collector). When the light shines on the collector from an angle the performance changes, and this is what the IAM (Incidence Angle Modifier) values provide us, an angular performance factor. A value of 1 is achieved when the collector is perpendicular to the suns rays, and therefore receiving maximum radiation. For flat plate collectors, 1 is the maximum value, dropping off in both morning and afternoon. Evacuated tube collectors, however, often provide values in excess of 1 during these periods, as factors such as reflective panels and reflection off neighbouring tubes can influence the relative performance.

A solar collector that is mounted on a device to track the sun from sunrise to sunset (as sometimes used in PV applications) will maintain a IAM value of 1 throughout the day, as the collector is always facing the sun, and therefore providing performance output in line with the standard performance curve.

For most solar collectors currently on the market, IAM is not an important consideration when comparing performance. This is because flat plate collectors, evacuated tube collectors with a flat absorber, or those that using reflective panels usually have a fairly similar set of transversal and longitudinal IAM values. The value of most concern for fixed position collectors is transversal IAM, as this reflects the change in performance throughout the day. Longitudinal IAM is useful when looking at installation angle, and the changes in heat output throughout the year as angle of the sun above the horizon changes between winter and summer.

The longitudinal and transversal IAM values for the Apricus solar collector are as follows:

IAM \ Angle	0º	10º	20º	30º	40º	50º	60º	70º	80º	90º
Kθ (longitudinal)	1.0	1.0	0.99	0.98	0.96	0.93	0.87	0.74	0.38	0
Kθ (transversal)	1.0	1.02	1.08	1.18	1.37	1.4	1.34	1.24	0.95	0

(SPF report C632LPEN)

For longitudinal insolation, a value for 50° is generally only provided, however the curve is standard for most collectors, very similar to the transversal curve for flat plate collectors (see graph below).

The following graph displays the transversal IAM values for the Apricus collector, a leading flat-plate and leading evacuated tube reflective panel solar collector.

Technical Info

Evacuated Tubes

Heat Pipes

Efficiency Calculations

Efficiency

1 - Performance Basics

2 - Understanding IAM

3 - IAM Adjustment

4 - Collector Comparison

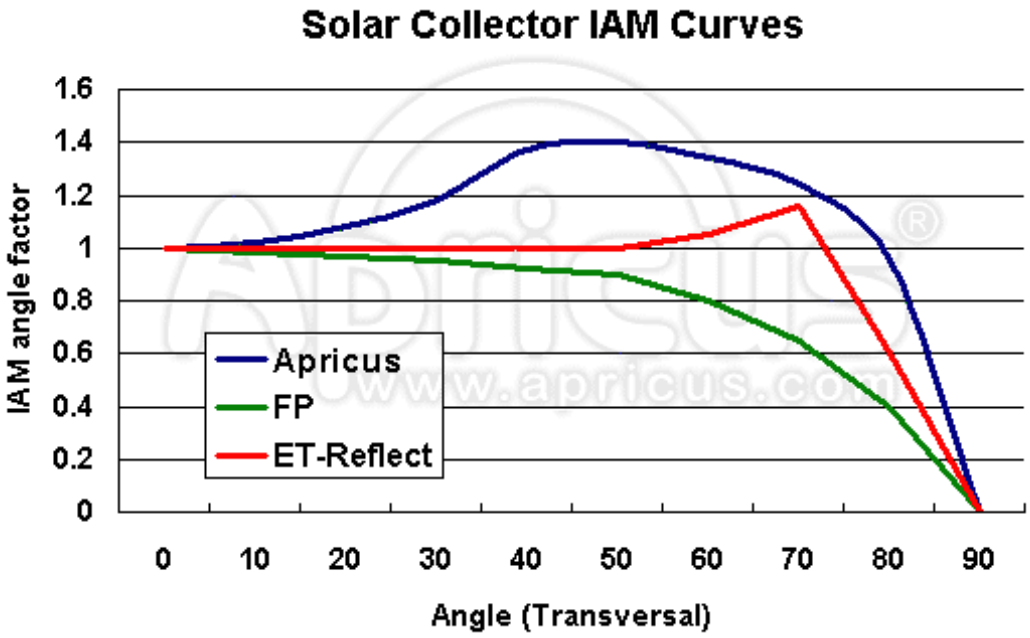

As can be seen, the Apricus solar collector has a curve which is quite different to the other two collectors . This is due to the cylindrical absorber area, which passively tracks the sun throughout the day. At 40-50° there is no light lost between the tubes, and no tube overlap, and reflection of neighbouring tube, hence a peak in relative performance. This is ideal, as during this period (mid morning through mid afternoon) solar isolation levels are quite high. The peak at 70° provided by the ET-reflect is of little benefit as this angle corresponds to early morning or late afternoon when solar insolation levels are very low. The flat plate collector's IAM values drop away from 1 as the angle increases, and as such solar conversion efficiency is only at peak levels at midday.

To understand how the tubes passively track the sun throughout the day, refer to the diagram to the left.

When looking at the tubes from above (0°) each tube's surface is clearly visible, and therefore exposed to the maximum amount of sunlight. At this angle however some light is lost between the tubes, and therefore because this is used as a reference point for the IAM value of 1, when the gaps close up, the IAM value with actually increase (a greater % of light shining on the collector is actually being absorbed).

When the sun reaches an angle of 40° which correlates to 2h 40min before or after midday, the solar tubes are still fully visible with no gaps

between, and no overlap. It is at this point that the pure IAM values reach their peak. The tubes are exposed to all the sunlight shining towards them, and all the tubes are still perpendicular to the sun.

As the angle increases, the tubes start to overlap, shading each other. They are still facing the sun, but the actual surface area of absorber exposed to the sunlight is reduced. Only a small amount of sunlight falls beyond 40° (early morning and late afternoon), and so this decrease in surface area has minimal influence on the total daily energy output of the collector.

The IAM effect increases the heat output of the Apricus solar collector by as much as 25% when compared to a flat collector surface of the same absorber area and performance variables. It is very important to consider IAM effect when calculating the heat output of Apricus solar collectors and indeed when comparing to other solar collectors.

Surprisingly, the Apricus solar collector actually provides more heat in a stationary position, than if it physically tracked the sun throughout the day!

Cosine Adjustment

If solar insolation levels that are based on tracking the sun throughout the day are used, a Cosine adjustment is required. Apricus recommends using data that is based on equator pointed surface measurements, therefore a cosine adjustment is not required and the IAM factors can be used directly in the performance equation to determine heat output. For more on determining insolation levels, click here.

Site Map

When calculating the heat output of a collector, the IAM performance adjustment factor (K) should be included in the efficiency formula.

$$\eta(x) = K.\eta o - a1.(X) - a2.G.(X)^2$$

The key difference to that formula presented on the first page of this section is the inclusion of the factor K in front of the y-intercept value. The K value can also include the longitudinal IAM factor, thus taking into consideration the installed angle of the collector too. This is achieved by simply multiplying the two IAM factors to provide a complete IAM value.

If we continue with the example from section 1:

Eg. At 2:40pm; transversal angle of 40º = IAM of 1.37; ambient temperature of 25ºC (77ºF); average water temp [(T_{inlet} +T_{exit})/2] of 50ºC (122ºF); insolation level of 800Watts/m^2 (252Btu/ft^2).

x = (50-25)/800 = 0.03125

Now enter all the values into the efficiency formula:

h(x) = 1.37*0.717 - (1.52*0.03125) - (0.0085*800*0.03125^2)

h(x) = 0.98 - 0.0475 - 0.0066 = 0.926

The performance value calculated with the above formula can then be used to calculate total heat output:

Heat Output = Performance x Insolation x Collector Surface Area

Example:

Performance @ 40° angle= 92.6%
Insolation = 800 Watts/m^2
Absorber Surface Area = 2.4m^2

Heat Output = 0.926 x 800 x 2.4 = 1777Watts

So the collector will provide 1.77 kW of heat output.

How can the performance reach 92.6%? Remember that the

Technical Info

Evacuated Tubes

Heat Pipes

Efficiency Calculations

Efficiency

1 - Performance Basics

2 - Understanding IAM

3 - IAM Adjustment

4 - Collector Comparison

efficiency variables and therefore this performance value is is expressed for absorber area, if using gross surface area the % efficiency value would be almost half this, but given the larger surface area if using gross, the heat output is the same. It is possible therefore for the % value to exceed 100% - it does not mean that more heat is being produced that the sun is providing, but rather due to reflection off neighbouring tubes etc, the amount of light the absorber is exposed to is greater than when the collector perpendicular to the sunlight rays (midday).

Simplifying IAM Adjustment Calculations

The calculation completed above is only for a specific point in time, and does not give an indication of the the actual performance over an entire day. Using performance modeling software, hour by hour calculations can be made taking into consideration average daily temperature changes, cold water temperatures, hours of sunlight, solar insolation levels in addition to collector performance variables and IAM values. Monthly and annual average performance values may therefore be estimated.

To complete a simple single day calculation for the purpose of comparing collector performance, an average IAM value can be use, along with an average Watt/m^2 value. Although this won't give a completely accurate indication of the heat output for the day, it allows a comparison between the two collector to be made.

As the majority of useful solar radiation falls during the middle 6-7 hours of the day, an average of the IAM values during this period can be used. If 1 hour corresponds to 15° then 7 hours corresponds to 50° either side of midday. The average cosine adjusted IAM for the Apricus solar collector for this period is 1.2, and a flat plate collector is 0.97. These factors can therefore be used in the performance formula. See the following section for more details.

Site Map

When comparing collectors, it is better to use efficiency values from the normal operating range rather than peak efficiency levels, as this will better represent average annual performance. The "normal operating range" refers to the normal delta-t range (Tm - Ta) that the collector is exposed to. For domestic water heating an average value of 30-40°C is common.

Every region has different ambient temperatures and different insolation levels, but for the purpose of a comparison we can use a "standard" set of environmental conditions.

In a moderate climate, an "average" intermittently clouded day in Spring can provide an insolation level of 3.5kWh/m^2/day. The solar radiation distribution throughout the day from sunrise to sunset is displayed in the following graph.

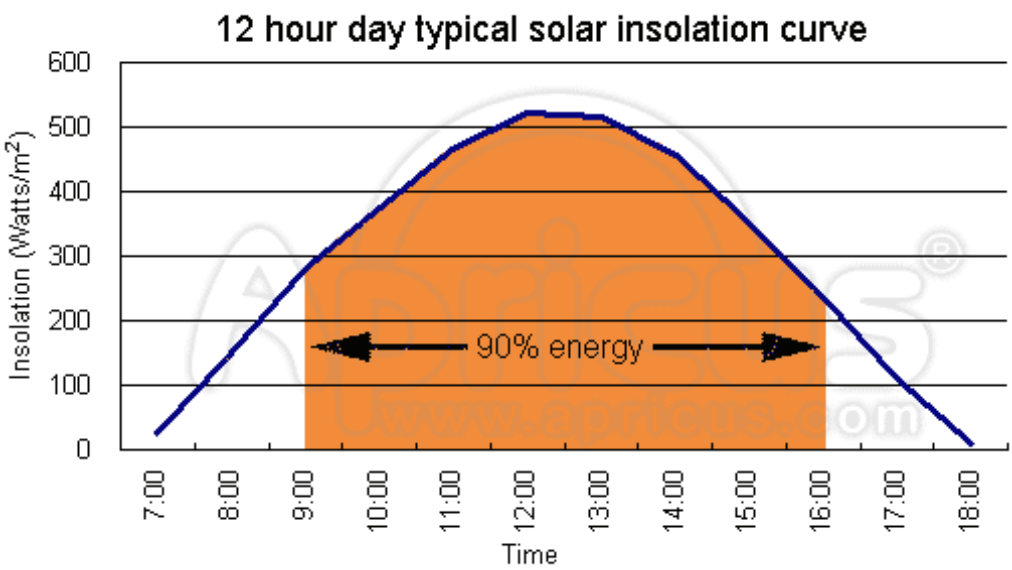

It can be seen that 90% of the radiation falls between 9:00am and 4:00pm with an average insolation level during this period of 400W/m^2.
We now have a full set of factors in order to do a comparison:

1. Insolation Level = 400Watts/m^2 **(G)**

2. (Tm-Ta) = 35K

3. (Tm-Ta)/G = 0.0875 **(x)**

4. Apricus:
- Performance variables: h**0** = 0.717, **a1** = 1.52, **a2** = 0.0085 (SPF)
- IAM adjustment = 1.2**(K)**

5. Leading Flat Plate:
- Performance variables: h**0** = 0.8, **a1** = 2.99, **a2** = 0.023 (SPF)

Technical Info

Evacuated Tubes

Heat Pipes

Efficiency Calculations

Efficiency

1 - Performance Basics

2 - Understanding IAM

3 - IAM Adjustment

4 - Collector Comparison

- IAM adjustment = 0.97**(K)**

The calculations for the two collectors are therefore as follows.

Apricus: Performance = 1.2 * 0.717 - (1.52 * 0.0875) - (0.0085 * 400 * 0.0875^2)

= 1.2*0.717-0.133-0.026 = 70%

Flat Plate: Performance = 0.97 * 0.8 - (2.99 *0.0875) - (0.023 * 400 * 0.0875^2)

= 0.97*0.8-0.26-0.07 = 44.6%

Given the set of variables used, the AP solar collector would provide approximately **57%** greater heat output throughout the day for a given absorber area.

The same calculation can be completed with other collectors using performance variables and IAM values. Please note this is just a rough estimation based on average variables only. For a complete comparison a modelling software package such as FCHART, or TRNSYS should be used.

Please note: Apricus Solar Co., Ltd does not guarantee the accuracy of these calculations and will not be held liable or responsible for any activities relating to their use. Apricus Solar Co., Ltd does not permit the use of these graphs or data for commercial use of any kind.

Site Map

FX & VFX Series

Sealed & Vented True Sinewave Inverter/Charger

OutBack Power Systems

The OutBack true sinewave inverter/charger is a complete power solution. It incorporates a DC to AC sinewave inverter, battery charger and AC transfer switch housed within a die-cast aluminum chassis. Intelligent multistage battery charging runs your generator less, and prolongs the life of your batteries. Built-in networked communications enables multiple units to be stacked and connected with other OutBack power electronics providing industry leading integration and near infinite application flexibility. The exclusive modular system architecture means that increased power output is just an additional inverter/charger away. Our flagship *FX* series uses a sealed chassis that can operate in the harshest environmental conditions such as high humidity and corrosive salt air. The *VFX* series uses a vented chassis with "bug proof" screened openings that allow high output AC power in the hottest of operating conditions.

OutBack Power inverter/chargers are the only choice when you need a true sinewave, powerful, modular and reliable power solution for your home, business or extreme application.

Sealed FX

Sinewave Output
Intelligent Battery Charging
Modular Stackable Design
High Operating Efficiency
Weather-resistant Sealed Chassis
Corrosion Resistant Internal Components
Field Serviceable
Integrated Network Communications
Standard 2 Year Limited Warranty

Vented VFX

Sinewave Output
Intelligent Battery Charging
Modular System Architecture
High Operating Efficiency
"Bug Proof" Chassis
Corrosion Resistant Internal Components
Field Serviceable
Integrated Network Communications
Standard 2 Year Limited Warranty

Off-Grid Specifications

		Sealed Models			*Vented Models*		
		FX2012T	**FX2524T**	**FX3048T**	**VFX2812**	**VFX3524**	**VFX3648**
Nominal DC Input Voltage		12 VDC	24 VDC	48 VDC	12 VDC	24 VDC	48 VDC
Continuous Power Rating at 25° C		2000 VA	2500 VA	3000 VA	2800 VA	3500 VA	3600 VA
AC Voltage/Frequency		120 VAC 60 Hz	120 VAC 60 Hz	120 VAC 60 Hz	120 VAC 60 Hz	120 VAC 60 Hz	120 VAC 60 Hz
Continuous AC RMS Output at 25° C		17.0 amps AC	20.8 amps AC	25.0 amps AC	23.3 amps AC	29.2 amps AC	30.0 amps AC
Idle Power	Full	~ 20 Watts	~ 20 Watts	~ 23 Watts	~ 20 Watts	~ 20 Watts	~ 23 Watts
	Search	~ 6 Watts	~ 6 Watts	~ 6 Watts	~ 6 Watts	~ 6 Watts	~ 6 Watts
Typical Efficiency		90%	92%	93%	90%	92%	93%
Total Harmonic Distortion	Typical	2%	2%	2%	2%	2%	2%
	Maximum	5%	5%	5%	5%	5%	5%
Output Voltage Regulation		± 2%	± 2%	± 2%	± 2%	± 2%	± 2%
Maximum Output Current	Peak	56 amps AC	70 amps AC	70 amps AC	56 amps AC	70 amps AC	70 amps AC
	RMS	40 amps AC	50 amps AC	50 amps AC	40 amps AC	50 amps AC	50 amps AC
AC Overload Capability	Surge	4800 VA	6000 VA	6000 VA	4800 VA	6000 VA	6000 VA
	5 Second	4000 VA	4800 VA	4800 VA	4000 VA	5000 VA	5000 VA
	30 Minutes	2500 VA	3200 VA	3200 VA	3200 VA	4000 VA	4000 VA
AC Input Current Maximum		60 amps AC	60 amps AC	60 amps AC	60 amps AC	60 amps AC	60 amps AC
AC Input Voltage Range (MATE Adjustable)		80 to 150 VAC	80 to 150 VAC	80 to 150 VAC	80 to 150 VAC	80 to 150 VAC	80 to 150 VAC
AC Input Frequency Range		54 to 66 Hz	54 to 66 Hz	54 to 66 Hz	54 to 66 Hz	54 to 66 Hz	54 to 66 Hz
DC Input Voltage Range		10.5 to 17.5 VDC	21.0 to 34.0 VDC	42.0 to 68.0 VDC	10.5 to 17.0 VDC	21.0 to 34.0 VDC	42.0 to 68.0 VDC
Continuous Battery Charge Output		80 amps DC	55 amps DC	35 amps DC	125 amps DC	85 amps DC	45 amps DC
Minimum Recommended DC Breaker		OBDC-250	OBDC-175	OBDC-100	OBDC-250	OBDC-250	OBDC-175
Warranty		Standard 2 year / Optional 5 year			Standard 2 year / Optional 5 year		
Weight	Unit	62.6 lbs (28.4 kg)			61 lbs (27.7 kg)		
	Shipping	67 lbs (30 kg)			64 lbs (29 kg)		
Dimensions (H x W x L)	Unit	13 x 8.25 x 16.25" (33 x 21 x 41 cm)			12 x 8.25 x 16.25" (30 x 21 x 41 cm)		
	Shipping	21.75 x 13 x 22" (55 x 33 x 56 cm)			21.75 x 13 x 22" (55 x 33 x 56 cm)		

OutBack Power Systems

Main Office:
19009 62nd Avenue NE
Arlington, WA 98223 USA
Phone: (360) 435.6030
Fax: (360) 435.6019

European Office:
Urb. Garraf II Buzón 214
08860 Les Botígues de Sitges
Barcelona, ESPAÑA
Phone: (+34) 600.843.845

www.outbackpower.com

Available From:

SYSTEM MANAGEMENT REMOTE MONITOR AND CONTROL MATE

The OutBack MATE is a complete system controller and display for both the OutBack FX2000 inverter/charger and MX60 MPPT PV charge controller. It provides a display of the operation as well as allows control and adjustment of the setpoints. The OutBack Mate also coordinates the operation of the entire system to maximize performance and to prevent multiple products from conflicting.

A single OutBack MATE is able to connect to multiple FX2000 inverter/charges, MX60 MPPT PV charge controllers and any other OutBack power conversion and control products offered in the future. A maximum of ten OutBack products will be able to be connected to a single MATE via CAT 5 / ethernet type cabling with 8 wire RJ45 modular connectors and the OutBack HUB communication manager.

The OutBack MATE includes a 4 line backlit LCD display with 80 alphanumeric characters. This allows multiple measurements to be displayed at the same time and reduces the amount of abbreviations required, simplifying the operation and reducing confusion. All of the programmed setpoints are stored in permanent memory to eliminate the need to reprogram the system after a shutdown or battery replacement.

The OutBack MATE also includes a built in real time clock and calendar which allows programming of the inverter operation based on the time of day and even day of the week. This can be used to allow the system to work with time-of-day power rates or to limit a generator's run time to a specific time period of the day or week.

The OutBack MATE also includes an opto-isolated RS232 port with a DB9 jack for connection to the serial port of a PC computer.

OutBack is working with several third party developers to offer Windows based software programs for datalogging and graphical display of the system's operation and performance. This PC computer software will be available separately and is expected in September, 2002.

Specifications	The MATE
Interface Display	4 line 80 character backlit LCD - Alphanumeric with graphic symbols
Control Keypad	6 backlit silicone membrane keys- dedicated inverter and AC input keys
Status Indicators	Two LED Status Indicators : Green = Inverter Yellow = AC Input
Communication Protocol	Proprietary OutBack Multi-drop using an OutBack HUB
Interconnection Cabling	Standard CAT 5 network cable with RJ45 modular jack - 50 ft included
PC Computer Interface	RS232 opto-isolated DB9 jack 9600 baud serial communication
Microprocessor	16 MHz low power consumption version
Setpoint and Data Memory	32K non-volatile flash RAM
Clock / Calendar	On-board real time clock with battery backup
Audible Indicator	2 KHz Transducer
Environmental Rating	Indoor Type 1 Optional outdoor Type 3R transparent lockable cover
Dimensions	5.75" W x 4.25" H x 2" D 14.6 cm x 10.8 cm x 5.08 cm
Shipping Weight	1 lb - 454 g
Warranty	Two years parts and labor Optional Extended Warranty

Preliminary - Specifications subject to change without notice

MX60

Maximum Power Point Tracking Charge Controller

OutBack Power Systems

- Active Maximum Power Point Tracking
- High Operating Efficiency
- Battery Voltages from 12 VDC to 60 VDC
- PV Arrays up to 150 VDC Open Circuit
- Negative or Positive Ground Systems
- Built-in Data Logging
- Standard 2 Year Warranty

The MX60 is on the cutting edge of charge controller design. OutBack's real time active Maximum Power Point Tracking (MPPT) system ensures that your solar array is operating at its peak power point regardless of age, shading or environmental conditions. A peak operating efficiency of 98% maximizes your PV array's performance. The MX60's wide DC input range and 60 amp DC output current rating for 12, 24 or 48 VDC systems provides unmatched flexibility in the wiring as well as the sizing of your solar array. The ability to step-down a high voltage solar array to a low voltage battery can save you money by reducing the size of wire required and making the installation simpler and faster.

All of the MX60's status information is displayed on the large built-in 3.1" (8 cm) backlit LCD screen and OutBack's exclusive system networking allows your MX60 to communicate with the rest of your OutBack products for complete integration and high performance operation. Monitoring the performance of your solar array investment is easy through the use of the built-in data logging system or via the MATE and optional PC software (available separately).

The MX60 is the only choice when you demand a high performance, efficient and customizable charge controller for your advanced power system.

MX60 Specifications

Nominal Battery Voltages		12, 24, 32, 36, 48, 54 or 60 VDC (Single model - selectable via field programming)
Output Current		60 amps maximum with adjustable current limit for smaller systems
Maximum Solar Array Size		12 VDC systems 800 Watts / 24 VDC systems 1600 Watts / 48 VDC systems 3200 Watts
PV Open Circuit Voltage (VOC)		150 VDC absolute maximum coldest conditions / 140 VDC start-up and operating maximum
Standby Power Consumption		Less than 1 Watt
Charging Regulation		Five Stages: Bulk, Absorption, Float, Silent and Equalization
Voltage Regulation Set points		10 to 80 VDC user adjustable with password protection
Equalization Voltage		Up to 5.0 VDC above Absorb Set point Adjustable Timer - Automatic Termination when completed
Battery Temperature Compensation		Automatic with optional RTS installed / 5.0 mV per °C per 2V battery cell
Voltage Step-Down Capability		Can charge a lower voltage battery from a higher voltage PV array
Power Conversion Efficiency	Typical	98% at 60 amps with a 48 V battery and nominal 48 V solar array
Status Display		3.1" (8 cm) backlit LCD screen with 4 lines with 80 alphanumeric characters total
Remote Interface		Proprietary network system using RJ 45 Modular Connectors with CAT 5e Cable (8 wires)
Data Logging		Last 64 days of operation - amp hours, watt hours and time in float for each day along with total accumulated
		amp hours, kW hours of production
Hydro / Wind Turbine Applications		Consult factory for approved turbines
Positive Ground Applications		Requires two pole breakers for switching both positive and negative conductors on both solar array
		and battery connections (HUB-4 and HUB-10 are not recommended for use in positive ground applications)
Operating Temperature Range		Minimum -40° to maximum 60° C (Power capacity of the controller is derated when above 25° C)
Environmental Rating		Indoor Type 1
Conduit Knockouts		Two ½" and ¾" on the back; One ¾" and 1" on each side; Two ¾" and 1" on the bottom
Warranty		Standard 2 year / Optional 5 year
Weight	Unit	11.6 lbs (5.3 kg)
	Shipping	14 lbs (6.4 kg)
Dimensions (H x W x L)	Unit	13.5 x 5.75 x 4" (40 x 14 x 10 cm)
	Shipping	18 x 11 x 8" (46 x 30 x 20 cm)
Options		Remote Temperature Sensor (RTS), HUB and MATE

OutBack Power Systems

Main Office:
19009 62nd Avenue NE
Arlington, WA 98223 USA
Phone: (360) 435.6030
Fax: (360) 435.6019

European Office:
Urb. Garraf II Buzón 214
08860 Les Botígues de Sitges
Barcelona, ESPAÑA
Phone: (+34) 600.843.845

www.outbackpower.com

Available From:

OutBack Power Systems

ETL LISTED

PSPV

POWER SYSTEM PV

OutBack Power Systems now offers a PV array combiner which can be used with a wide variety of PV system designs and module configurations. Can be configured with DC breakers for low voltage systems (under 125 VDC) or touch safe type fuse holders for high voltage systems (up to 600 VDC).

The **PSPV** is designed to provide NEC code compliant overcurrent protection and interconnection of multiple PV panels or subarrays into one or more PV arrays for connection to charge controllers or inverter systems.

The **PSPV** is easily field configured to match your system design and ampacity requirements - It is shipped without the breakers or fuse holders installed – order the quantity, type and amperage needed.

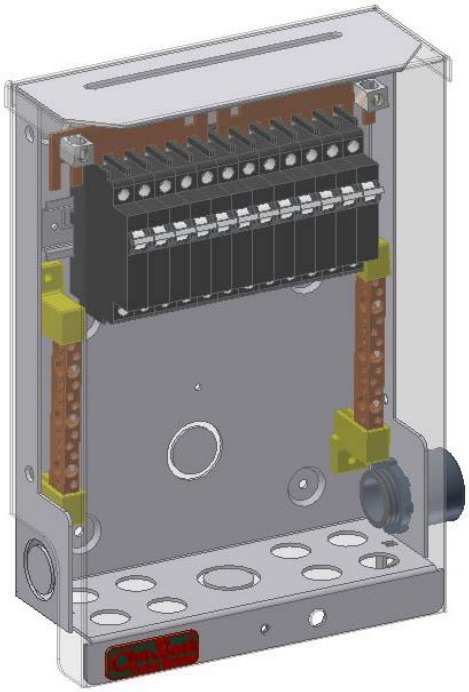

Shown with twelve 125 VDC PV breakers and second TBB option

Also available with touch safe type fuse holders for 600 VDC KLKD fuses

Standard Features and Components

- Outdoor, rainproof powdercoated aluminum enclosure – can be installed on vertical or sloped surfaces or pole mounted
- Snap in DIN rail mounting spaces for up to twelve 125 VDC rated OutBack PV breakers. PV Breakers are hydraulic-magnetic type and are not affected by high ambient temperatures. 10 year warranty on the PV breakers. For 12, 24, 48 and 60 VDC systems with PV array open circuit voltages up to 125 VDC. Load break rated.
- Also available with touch safe type midget fuse holders for high voltage systems up to 600 VDC
- Dual positive breaker combiner busbars – can be installed to provide one or two PV output circuits
- PV negative terminal bus bar with mounting holes for an additional TBB
- #1/0 AWG set-screw compression type box lug terminals for output wiring – accepts bare cable
- Four ¾ and 1 inch conduit knockouts – one on the bottom, back and each side – enough space provided on bottom and back to allow up to a 2 inch conduit punch for larger cabling
- Eight ½ inch knockouts on bottom for PV module or subarray input conduits or strain reliefs
- #1/0 AWG ground lug - can be mounted either on the inside or outside surface
- For negative or positive ground PV systems
- Space allowed for the addition of current sensors and lightning protection components

Easily configured in the field for* YOUR *specific PV system design

Optional Components

- **OBPV-6, OBPV-10 OBPV-15 -** UL listed DC breakers - 125 VDC max open circuit with elevator type compression terminals for #2-14 AWG bare wire - 6, 10, 15 amp models available
- **OBPV-FH** -Touch safe type fuse holder 600 VDC fuses – accepts #8-14 AWG wire
- **OBPV-F15** - 15 amp 600 VDC KLKD fuses for the OBPV-FH fuse holder
- **TBB** - Insulated terminal bus bar for adding a second isolated negative circuit (required when using with two RV Power Products Solar Boost MPPT controller)

Physical Dimensions

- **PSPV** enclosure: 9.2” wide x 3.5” deep x 13.1” tall (23.1cm x 8.7cm x 33.2cm)
- Shipping size: 10” x 4” x 14” Shipping Weight: 6 pounds (2.7 kG) + options

OutBack Power Systems, Inc. Tel 360.435.6030 Fax 360.435.6019

Watertight Straight Blade Plugs and Connectors

2 Pole, 3 Wire Grounding
NEMA 5-15, 15A 125V
NEMA 6-15, 15A 250V
NEMA 5-20, 20A 125V
NEMA 6-20, 20A 250V

INDUSTRIAL
COMMERCIAL
RESIDENTIAL

I-12
STRAIGHT BLADE PLUGS AND CONNECTORS

Watertight Straight Blade Plugs and Connectors

FEATURES

- Thermoplastic elastomeric exteriors outperform rubber when exposed to moisture, chemicals, oils, and the effects of ultraviolet radiation and ozone attack.
- Mated plug and connector form a watertight seal that meets the requirements of NEMA 3R, 4X and Withstands water spray test at 800 psi.
- Connector supplied with closure cap for watertight seal when connector not in use. Optional plug cap available.
- High visibility safety yellow for identification.
- Contacts, blades and terminal screws nickel plated for corrosion resistance.
- Quick drive, stainless steel assembly screws for fast installation.
- Color coded neoprene grommets for a watertight seal on a wide range of cord sizes.
- Add "-C" to catalog numbers for Canadian Screws.

15A and 20A Watertight Straight Blade Plugs and Connectors

Rating A	Rating V/AC	NEMA	Description	Color	Catalog No. Plug	Catalog No. Connector
15	125	5-15	Straight	Yellow	14W47	15W47
15	250	6-15	Straight	Yellow	14W49	15W49
20	125	5-20	Straight	Yellow	14W33	15W33
20	250	6-20	Straight	Yellow	14W48	15W48

14W47

15W47

Accessories

Accessories

Description	Catalog No.
Plug closure cap	14W
Replacement connector closure cap	15W
Wire mesh grip, cord dia. 0.30"-0.50" (7.6mm-12.7mm)	WM115
Wire mesh grip, cord dia. 0.50"-0.62" (12.7mm-15.7mm)	WM116

WM115

TESTING & CODE COMPLIANCE

· Listed to UL 498 (file no. E3663).
· cUL certified for Canada to C22.2 no. 42 (file no. E3663).
· 14W, 15W, WM115, WM116 not UL or cUL listed.

MATERIAL CHARACTERISTICS

Thermoplastic elastomeric (TPE) exterior. Glass filled Nylon and glass filled polypropylene interior. Temperature Rating: -40°C to 70°C.

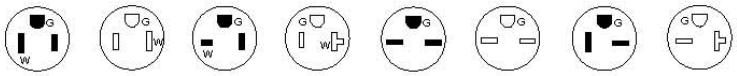

5-15P 5-15R 5-20P 5-20R 6-15P 6-15R 6-20P 6-20R

COOPER Wiring Devices

Air Handler Specs
American Standard #4TEE3F31A1000AB
Tonnage 1.5-3
Capacity 31,000
Height 43”
Width 21.5”
Depth 21”
Shipping Weight 134 lb.
http://www.americanstandardair.com/HomeOwner/Products/AirHandlers/24TEE.aspx

Condenser Specs
American Standard Allegiance 16 #4A7A6024B
Tonnage 2.0
Capacity 24,000
Height 37”
Width 33”
Depth 30”
Shipping Weight 233lb.
http://www.americanstandardair.com/HomeOwner/Products/AirConditioners/Allegiance16.aspx

Pub. No. 32-5003-03

User's Information Manual

Air Handlers --- Vertical, Horizontal and Convertible

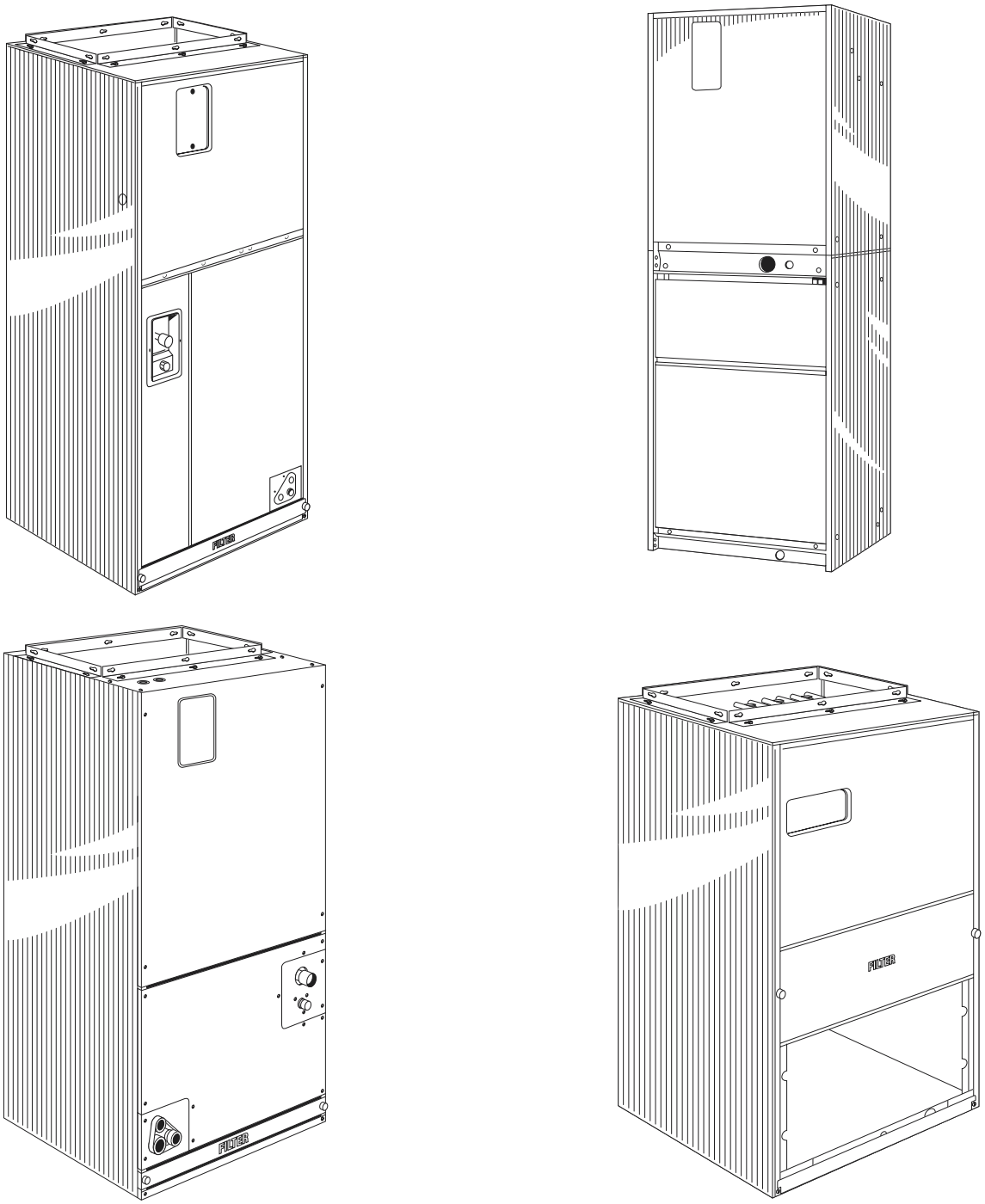

Not all models or configurations shown

21X145813P03

Warranty Information

Limited Warranty
Air Handler
4TE, 2TF, TWE-C/D/P/E, TWG, TVF
(Parts Only)
Models Less Than 6 Tons for Residential Use*

This limited warranty is extended by American Standard Inc., to the original purchaser and to any succeeding owner of the real property to which the Air Handler is originally affixed, and applies to products purchased and retained for use within the U.S.A. and Canada.

If any part of your Air Handler fails because of a manufacturing defect within five years from the date of the original purchase, Warrantor will furnish without charge the required replacement part. Any local transportation, related service labor, air filters and diagnosis calls are not included.

This limited warranty does not cover failure of your air handler if it is damaged while in your possession, damage caused by unreasonable use of the air handler and/or damage from **failure to properly maintain** the air handler as set forth in the Use and Care manual **(see Proper Maintenance section).**

This limited warranty applies to product installed on or after 10/1/2001 where product is manufactured after 1/1/2000. This limited warranty is not retroactive to any installations prior to 10/1/2001 or on product produced prior to 2000.

THE LIMITED WARRANTY AND LIABILITY SET FORTH HEREIN ARE IN LIEU OF ALL OTHER WARRANTIES AND LIABILITIES, WHETHER IN CONTRACT OR IN NEGLIGENCE, EXPRESS OR IMPLIED, IN LAW OR IN FACT, INCLUDING IMPLIED WARRANTIES OF MERCHANTABILITY AND FITNESS FOR PARTICULAR USE, AND IN NO EVENT SHALL WARRANTOR BE LIABLE FOR ANY INCIDENTAL OR CONSEQUENTIAL DAMAGES.

Some states do not allow limitations on how long an implied limited warranty lasts or do not allow the exclusion or limitation of incidental or consequential damages, so the above limitation or exclusion may not apply to you. This limited warranty gives you specific legal rights, and you may also have other rights which vary from state to state.

Parts will be provided by our factory organization through an authorized service organization in your area listed in the yellow pages. If you wish further help or information concerning this limited warranty, contact:

American Standard Inc.
Troup Highway
Tyler, TX 75711-9010
Attention: Manager, After Sales Support GW-627-1802

* This limited warranty is for residential usage of this equipment and not applicable when this equipment is used for a commercial application. A commercial use is any application where the end purchaser uses the product for other than personal, family or household purposes.

Optional Extended Warranty

Optional Extended Warranties are available from the Manufacturer. The Extended Warranty can be purchased from your dealer and is in effect when you have received an Extended Warranty Certificate . **No additional warranty, either written or implied, is extended by the Manufacturer without an Extended Warranty Certificate from the Manufacturer.** If you do not receive your Extended Warranty Certificate within 45 days of purchase, please call 800-554-6413.

Reduce the burden of unexpected repair bills with an Extended Warranty.

American Standard Inc. offers the finest quality products and manufacturer's warranties on the market. But, like all good things, the Manufacturer-provided limited warranty on your new comfort equipment will come to an end. To keep you protected, American Standard Inc. offers the Extended Warranty Program. It picks up right where your Manufacturer's limited warranty leaves off. And, it offers years and years of reliable protection at a low cost. Ask your dealer for program details.The American Standard Inc. Extended Warranty provides:

1. The opportunity to supplement your Limited Warranty for five or ten years.
2. Coverage that may include parts only or parts and labor for the duration of the agreement. Be certain you read the Extended Warranty for complete details and exclusions.
3. Service work performed by servicers knowledgeable of the operation of your equipment.

⚠ CAUTION

To prevent injury, death, or property damage, read and follow all instructions and warnings, including labels shipped with or attached to unit before operating your new air conditioning system.

Contents

Proper Maintenance reduces electricity use.

⚠ WARNING

Improper installation, adjustment, alteration, service, maintenance, or use can cause explosion, fire, electrical shock, or other conditions which may cause personal injury or property damage. Consult a qualified installer or service agency for information or assistance. The qualified installer or agency must use factory-authorized kits or accessories when modifying this product.

⚠ WARNING

Disconnect all electrical power to the indoor air handler or furnace before removing access panels to perform any maintenance. Disconnect power to both the indoor and outdoor units. NOTE: There may be more than one electrical disconnect switch. Electric shock can cause personal injury or death.

A clean filter saves money.

Help ensure top efficiency by cleaning the filter regularly.
When the unit circulates and filters the air in your home, dust and dirt particles collect on the filter located in your indoor unit. Excessive buildup forces the system to run longer to maintain your set temperature. And you end up paying for it.

Clean or replace your filter at least once a month or twice a month when the system is running more.

⚠ CAUTION

Although special care has been taken to minimize sharp edges in the construction of your unit, be extremely careful when handling parts or reaching into the unit.

If you have a semi-permanent filter, you can take the filter out of the frame and vacuum it.
Where disposable filters are used, they must be replaced every month with the same size as originally supplied.
Both methods are quick and easy and guaranteed to cut the energy used by your system.
When replacing your air handler filters, always use the same size and type that was originally supplied. Filters are available from your dealer.

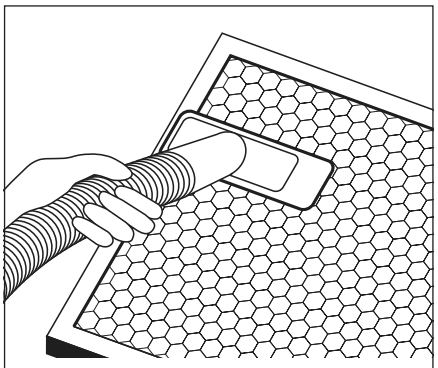

Your filter may or may not be framed.

How to remove your filter.

Ask your dealer where the filter is located when your system is installed.
It may be behind the bottom panel of your indoor unit.
Or it may be at the top, bottom, or either side.
Or there may be two filters.

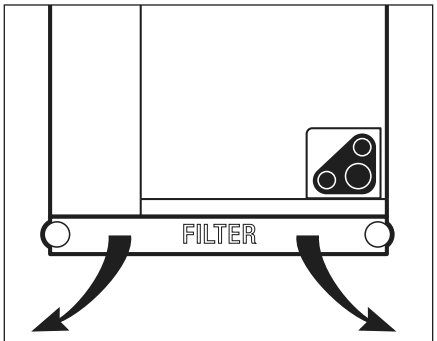

Locate access door marked "FILTER" and loosen two thumb screws.

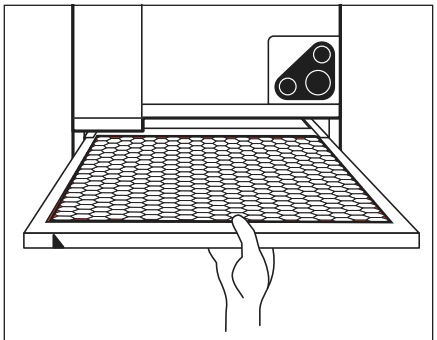

Slide dirty filter out, replace with a new filter making sure the arrows printed on it are pointing in the direction of airflow

In any case, removing a filter is easy. Just make sure you insert the clean filter with the arrows on it pointing in the direction of the airflow.
Your installing dealer is your best source of filter and maintenance information.

Cut operating costs by keeping snow, ice and debris clear of your outdoor heat pump unit.

Efficient operation of your outdoor unit requires the free flow of air over the coils. Anything that blocks this flow forces the unit to work harder to do its job. At no time should anything be stacked against the side of the outdoor unit or draped over it. Keeping it clear of debris helps it work at peak efficiency, and that helps hold down operating costs.

Don't waste money heating and cooling when you don't need to.

⚠ CAUTION

If heating system is not operational during the cold weather months, provisions must be taken to prevent freeze-up of all water pipes and water receptacles. This is very important during times of vacancy.

When you're going to be away from home for a few days – or when outdoor temperatures are moderate – don't let your system run unnecessarily. Lower the thermostat to 55°F in the winter. And raise it to 85°F in summer. Then when you return – or when temperatures dictate – you can reset the system and it will immediately begin making your home comfortable again.

⚠ CAUTION

Condensate drains should be checked and cleaned periodically to assure condensate can drain freely from coil to drain. If condensate cannot drain freely, water damage could occur.

Never stop the system by shutting off the main power.

If the main power is ever disconnected for more than three hours, turn off the thermostat. Then wait for at least three more hours after the power has been restored before turning the thermostat back on. Failure to follow this procedure could result in damage to your system.

CAUTION: Whenever your house is to be vacant, arrange to have someone inspect your house for proper temperature. This is very important in below freezing weather. If for any reason your unit should fail to operate, damage could result, such as frozen water pipes.

The Problem Solver

Before you call for service, check the following:

Insufficient heating or cooling	a. Dirty filters b. Air not circulating freely c. Blocked outdoor coil	a. Clean or replace b. Check supply registers and return grills for blockage c. Clear away leaves or other debris
Failure to operate	a. Power off b. Open circuit breaker or burned-out fuses c. Improperly adjusted thermostat	a. Make sure switch is in the ON position b. Reset circuit breaker, or replace burned-out fuses c. Check setting, adjust thermostat
Unusual Noise		Call your local Servicer

This unit is not a household appliance. It is a complex selfcontained system that requires professional maintenance and repair. That's why attempts at do it yourself repairs on an in-warranty unit may void the remainder of your warranty. Other than performing the simple maintenance recommended in this manual, you should not attempt to make any adjustments to your system.
NOTE: The blower motor bearings are factory lubricated and under normal operating conditions usually do not require servicing. Your local servicer can advise you if oiling is required.
Your dealer should be able to take care of any questions or problems you may have.

Keep your unit looking like new for years.
Clean the enamel finish of your unit with ordinary soap and water. For stubborn grease spots, use a household detergent. Lacquer thinner or other synthetic solvents may damage the finish.
Just set the temperature you want.
Set temperatures by using the indicators on the thermostat* control. After that, your comfort control center (thermostat) will maintain a constant indoor temperature, regardless of changes in outdoor temperatures. Read your thermostat manual for directions on setting the temperatures.
Save energy with an electronic programmable thermostat.
With an electronic programmable thermostat* energy savings is easy. Just program the thermostat for the temperatures you are most comfortable with and it will automatically change settings up to four times a day. Special weekend and vacation schedules are also easily programmed for comfort and savings. Read your thermostat manual for programming instructions. If you want the optimum balance between comfort and the cost of running your system, we recommend keeping the temperature settings at 68°F for heating and 78°F for cooling.
Save energy by letting the thermostat do its job. Once you set the thermostat, keep subsequent adjustments to a minimum. Adjust it only when a new program is needed.
*Optional accessory

P.I. 09/02

American Standard Inc.
6200 Troup Highway
Tyler, Texas 75711

American Standard

OWNER'S MANUAL
CENTRAL AIR CONDITIONER

Congratulations on the purchase of your new American Standard air conditioner. Your air conditioner is designed to work with a matched indoor unit creating a system that delivers years of dependable service and performance.

Contents

Your air conditioning system cools, filters, and dehumidifies your home.

As the air conditioning system circulates the air, it also filters it. The air conditioning system also extracts excess moisture from the air inside your home, thus helping to control humidity in muggy summer months.

Acquaint yourself with your new system by spending just a few minutes with this booklet. Learn about the operation of your system and the small amount of maintenance it takes to keep it operating at peak efficiency.

Proper maintenance for maximum efficiency

A central air conditioner is not a household appliance. It's a self-contained system that requires professional maintenance and repair.

That's why attempts at "do-it-yourself" repairs on an in-warranty unit may void the remainder of your warranty.

Other than performing the simple maintenance recommended in this manual, you should not attempt to make any adjustments to your central air conditioning system. Your dealer will be able to take care of any questions or problems you may have.

⚠ CAUTION

To prevent injury, death, or property damage, read and follow all instructions and warnings, including labels shipped with or attached to unit before operating your new air conditioning system.

⚠ WARNING

Disconnect all electrical power to the indoor air handler or furnace before removing access panels to perform any maintenance. Disconnect power to both the indoor and outdoor units. NOTE: There may be more than one electrical disconnect switch. Electric shock can cause personal injury or death.

⚠ CAUTION

Although special care has been taken to minimize sharp edges in the construction of your unit, be extremely careful when handling parts or reaching into the unit.

Help ensure top efficiency by cleaning or replacing the filter monthly.*

When the air conditioner circulates and filters the air in your home, dust and dirt particles build up on the filter. Excessive accumulation can block the air flow, forcing the unit to work harder to maintain desired temperatures. And the harder your unit works, the more energy it uses.

Clean or replace your filter twice a month during seasons when the unit runs more often.

When replacing your filter(s), always use the same size and type that was originally supplied. Filters are available from your dealer.

Where disposable filters are used, they must be replaced every month with the same size as originally supplied.

How to remove your filter.*

Ask your American Standard dealer where the filter is located in your system and how to service it.

Just be sure to replace it with the arrows pointing in the direction of the air flow.

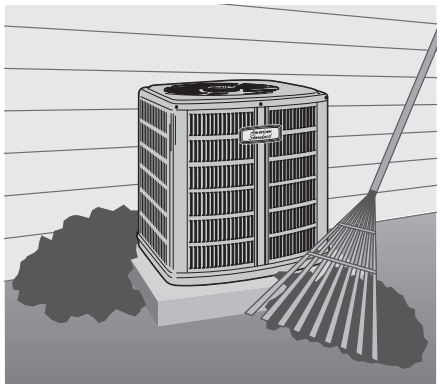

Efficiency can be maintained by keeping outdoor unit clear of debris, leaves and shrubbery.

Efficient operation of your air conditioner depends on the free flow of air over the coil. Anything that blocks the air flow, causes the compressor to work harder to move the warm air out of your house.

To avoid overworking your unit, do not plant flowers or shrubbery right next to it. Also, make sure that nothing is stacked against the sides of the unit or draped over it.

Making sure your outdoor unit is kept clear at all times helps it work at peak efficiency.

Keep your air conditioner looking new for years.

Clean the enamel finish of your air conditioner with soap and water. For stubborn grease spots, use a household detergent. Do not use lacquer thinner or other synthetic solvents as they may damage the finish.

*Before removing the filter, see the owners manual furnished with the indoor unit.

Call your dealer for additional routine maintenance

Your air conditioning system should be inspected regularly by a properly trained service technician. **The inspection (preferably twice each year, but at least once a year) should include the following:**

- Routine inspection of air filter(s). Replacement or cleaning as required.
- Inspection and cleaning of the blower wheel, housing, and motor as required.
- Inspection and, if required, cleaning of indoor and outdoor coils.
- Inspection of the indoor coil drain pan, plus the primary and secondary drain lines. If supplied, the auxiliary drain pan and line should be inspected at this time. Service should include cleaning, if required.

⚠ CAUTION

Condensate drains should be checked and cleaned periodically to assure condensate can drain freely from coil to drain. If condensate cannot drain freely, water damage could occur.

- A check of all electrical wiring and connections.
- A check for secure physical connections of individual components within units.
- Operational check for the air conditioning system to determine actual working condition. Necessary repair and/or adjustment should be performed at this time.
- **Your servicing dealer may offer an economical service or preventative maintenance agreement that covers seasonal inspections. Ask your dealer for further details.**

⚠ WARNING

Improper installation, adjustment, alteration, service, maintenance, or use can cause explosion, fire, electrical shock, or other conditions which may cause personal injury or property damage. Consult a qualified installer or service agency for information or assistance. The qualified installer or agency must use factory-authorized kits or accessories when modifying this product.

How to operate your system for peak performance

Setting the temperature

Place the system switch on COOL, and the fan switch on AUTO. Then set the temperature by using the indicator on the thermostat* control.

Now your system will cool your house whenever the indoor temperature climbs above the thermostat setting. It will shut off when the desired room temperature is reached.

In winter, it works the same way. When the system switch is on HEAT, the system will operate whenever the room temperature falls below the temperature setting. Once the desired temperature is reached, the system will shut off.

Save energy with an electronic programmable thermostat.*

Program the thermostat for the temperatures that meet your comfort level. The American Standard electronic programmable thermostat has up to four setup or setback periods each day, plus weekend and vacation programs.

*Accessory, purchased separately. Carefully read the accompanying thermostat manual for complete operating instructions.

Let the thermostat do its job.

Your system will perform most efficiently when you let the thermostat control it. Turning the system on and off manually is usually much less efficient. So let the thermostat do its job.

We recommend keeping the temperature setting at 78°F for cooling, 68°F for heating. However, you can select the temperature that meets your comfort level.

The point is, once you've set the thermostat, keep subsequent adjustments to a minimum.

When you're going to be away from home for a few days, or when outdoor temperatures are moderate, don't let the air conditioner run unnecessarily. Lower the thermostat to 55°F in the winter. And raise it to 85°F in summer. Then when you return, or when temperature conditions dictate, you can reset the system and it will resume making your home comfortable again.

Never stop the system by shutting off the main power.

If the main power is ever disconnected for more than three hours, turn off the thermostat. Then wait for at least three more hours after the power has been restored before turning the thermostat back on. Failure to follow this procedure could result in damage to your system.

⚠ CAUTION

If heating system is not operational during the cold weather months, provisions must be taken to prevent freeze-up of all water pipes and water receptacles. This is very important during times of vacancy.

How to help reduce summer humidity.

In summer, your air conditioner does more than cool the air — it helps remove the excess moisture, that can make the inside of your home feel muggy. When removing this moisture your system must work harder than when simply cooling the air.

That's why kitchens, bathrooms and utility rooms should have vents and exhaust fans. These devices help prevent accumulation of moisture throughout the rest of the house so your air conditioner works less to keep you comfortable.

The Problem Solver

Before you call for service, check the following:

Problem	Possible cause	Remedy
Insufficient heating or cooling	a. dirty filters b. air not circulating freely c. blocked outdoor coil	a. clean or replace b. check supply registers and return grills for blockage c. clear away leaves or other debris
Failure to operate	a. power off b. open circuit breaker or burned-out fuses c. improperly adjusted thermostat	a. make sure main switch is in ON position b. reset circuit breaker, or replace burned-out fuses c. check setting, adjust thermostat
No Heating or Cooling — Blower does not operate	Blower door removed or ajar	Close door securely to restore power to blower
Unusual Noise		Call your local servicer

Reduce the burden of unexpected repair bills with an American Standard Extended Warranty.

American Standard offers the finest quality products and manufacturer's warranties on the market. But, like all good things, the American Standard provided limited warranty on your new comfort equipment will come to an end. To keep you protected, American Standard offers the Extended Warranty Program. It picks up right where your American Standard limited warranty leaves off. And, it offers years and years of reliable protection at a low cost. Ask your dealer for program details.

The American Standard Extended Warranty provides:

1. The opportunity to supplement your Limited Warranty for five or ten years.
2. Coverage that may include parts only or parts and labor for the duration of the agreement. **Be certain you read the Extended Warranty for complete details and exclusions.**
3. Service work performed by servicers knowledgeable of the operation of American Standard equipment.

Warranty Information

It's always a good idea to keep records — it will save you time and money. If it's necessary to have your air conditioner repaired, the serviceman will want to know if your unit is still under Warranty. Take a few minutes to record the following information here:

Outdoor Unit Model Number _____

Indoor Unit Model Number _____

Thermostat/Accessory Model Number _____

Date of Purchase _____

Installing Dealer _____

Service Information

Call your installing dealer if the unit is inoperative. Before you call, always check the following to be sure service is required:

a. Be sure the main switch that supplies power to the unit is in the ON position.
b. Replace any burned-out fuses or reset circuit breakers.
c. Be sure the thermostat is properly set.

Service Phone _____

Extra Energy Tips

Insulation

1. Make sure your home is properly insulated. This is the single most important step in conserving energy. Thermal insulation should be specified in terms of thermal resistance (R-values). R-30 (10") is recommended for ceilings, R-11 (3-1/2) for exterior walls and floors over unheated areas. In colder climates, consider additional insulation.
2. Infiltration of humid outside air is your heating and cooling system's worst enemy — it could account for 15 to 30% of air conditioning energy requirements. Find the places where air can sneak into the home and plug them with caulking, weather-stripping or plastic. Also, weather-strip and caulk around all entrance doors and windows.
3. Cut heat transfer through your windows by 40 to 50% with double glazing (two panes of glass separated by a sealed air space) and low-e glass.
4. Use wood- or metal-frame storm windows even if single-glazed windows are high quality. The extra layer of glass and the layer of still air will cut heat transfer considerably.
5. Install storm doors at all entrances to your house.
6. Keep all windows and doors closed.
7. Remember that by increasing the glass area, you increase the amount of heat added in summer and lost in winter.
8. Make sure fireplaces have tight-fitting dampers which can be closed when the fireplace is not in use.
9. Invest in a humidifier to conserve energy in winter. The air in your home won't be as dry, so you stay comfortable at a lower temperature setting.

Heating

10. Locate the thermostat on an inside wall away from windows and doors.
11. Set the thermostat as low as comfort permits. Each degree over 68°F can add 3% to the amount of energy needed for heating.
12. People generate heat. So lower the thermostat a degree or two when expecting a large group of guests.

Cooling

13. Set the thermostat as high as comfort will permit.
14. Make sure attics are adequately ventilated to relieve heat buildup. If necessary, improve air flow by adding or enlarging vents.
15. When building a new house or renovating an old one, choose light-colored roof shingles to reflect more of the sun's heat.
16. During moderate weather, don't use the air conditioner unnecessarily.
17. Draw blinds or drapes to block the sunlight during the hottest part of the day.
18. Install awnings over windows exposed to direct sunlight.
19. In the cooling season, don't run kitchen and bath exhaust fans longer than necessary.
20. Don't place lamps, TV sets or other heat producing devices beneath a wall-mounted thermostat. Rising heat from the equipment may cause the air conditioner system to overcool your house.

LIMITED WARRANTY
AMERICAN STANDARD CENTRAL AIR CONDITIONER
ALLEGIANCE 4A7A2, 4A7A4, 4A7A6, 2A7A1, 2A7A2, 2A7A4, 2A7A5 & 2A7A8

Models Less Than 20 Tons for Residential Use*
(Parts Only)

This limited warranty is extended by American-Standard Inc., to the original purchaser and to any succeeding owner of the real property to which the American Standard Central Air Conditioner is originally affixed, and applies to products purchased and retained for use within the U.S.A. and Canada.

If any part of your American Standard Central Air Conditioner fails because of a manufacturing defect within five years from the date of the original purchase, Warrantor will furnish without charge the required replacement part. Any local transportation, related service labor, diagnosis calls, refrigerant and related items are not included.

In addition, if the sealed motor-compressor(s) fail(s) or if the outdoor coil† should become defective, either or both events occurring because of a manufacturing defect within the sixth through tenth year from the date of original purchase, Warrantor will furnish without charge the required replacement compressor(s) and/or outdoor coil. Any local transportation, related service labor, diagnosis calls, refrigerant and related items are not included.

† NOTE: If your American Standard Central Air Conditioner is installed within one mile of salt water, including but not limited to seacoasts and inland waterways, your outdoor coil warranty as stated above is limited to five years from the date of original purchase unless BAYSEAC001 (Seacoast kit) is added at time of installation.

This limited warranty does not cover failure of your American Standard Central Air Conditioner if it is damaged while in your possession, damage caused by unreasonable use of the American Standard Central Air Conditioner and/or damage from **failure to properly maintain** the American Standard Central Air Conditioner as set forth in the American Standard Use and Care manual **(see Proper Maintenance section).**

This limited warranty applies to product installed on or after 10/1/2001 where product is manufactured after 1/1/2000. This limited warranty is not retroactive to any installations prior to 10/1/2001 or on product produced prior to 2000.

THE LIMITED WARRANTY AND LIABILITY SET FORTH HEREIN ARE IN LIEU OF ALL OTHER WARRANTIES AND LIABILITIES, WHETHER IN CONTRACT OR IN NEGLIGENCE, EXPRESS OR IMPLIED, IN LAW OR IN FACT, INCLUDING IMPLIED WARRANTIES OF MERCHANTABILITY AND FITNESS FOR PARTICULAR USE, AND IN NO EVENT SHALL WARRANTOR BE LIABLE FOR ANY INCIDENTAL OR CONSEQUENTIAL DAMAGES.

Some states do not allow limitations on how long an implied limited warranty lasts or do not allow the exclusion or limitation of incidental or consequential damages, so the above limitation or exclusion may not apply to you. This limited warranty gives you specific legal rights, and you may also have other rights which vary from state to state.

Parts will be provided by our factory organization through an authorized service organization in your area listed in the yellow pages. If you wish further help or information concerning this limited warranty, contact:

American Standard Inc.
Troup Highway
Tyler, TX 75711-9010
Attention: Manager, After Sales Support

AW-164-4404

* This limited warranty is for residential usage of this equipment and not applicable when this equipment is used for a commercial application. A commercial use is any application where the end purchaser uses the product for other than personal, family or household purposes.

Optional Extended Warranty

Optional Extended Warranties are available from the Manufacturer. The Extended Warranty can be purchased from your dealer and is in effect when you have received an Extended Warranty Certificate from American Standard. **No additional warranty, either written or implied, is extended by the Manufacturer without an Extended Warranty Certificate from American Standard.** If you do not receive your Extended Warranty Certificate within 45 days of purchase, please call 800-554-6413.

PUB. NO. 12-5019-05

American Standard Inc.
6200 Troup Highway
Tyler, TX 75711-9010

P.I. 10/04

BRADFORD WHITE®

Bradford White PowerStor Series™ SS

Energy Saver
Stainless Steel Indirect Water Heater

Features:

- **CFC free polystyrene insulation—**form fitted and molded, this system contributes to greater heat retention, improved overall efficiency and reduced standby heat loss.
- **Aquastat—**factory installed.
- **Stainless steel tank and heat exchanger—**made from chromium molybdenum - titanium ferritic 444 stainless steel alloy.
- **Supply and Return Connections—**the ¾" NPT female connections are located on the front for both the boiler supply and boiler return. (1" NPT on RTV-119)
- **Jacket—**corrosion and dent resistant plastic casing.
- **Stand-by heat loss—**less than ½°F per hour.
- **Brass Drain/Return Valve**
- **T&P relief valve opening—**all models have special tapping on top of tank.
- **Warranty –** Residential models have a limited lifetime warranty on the tank and heat exchanger. The RTV-119 is a commercial model and is furnished with a 5 year warranty on the tank and heat exchanger. For more details please refer to the complete copy of the warranty included with the heater.
- **Six year limited warranty on parts.**

MANUFACTURED UNDER ONE OR MORE OF THE FOLLOWING U.S. PATENTS: 5,954,492; 5,761,379; 5,943,984; 5,081,696; 5,988,117; 6,142,216; 5,199,385; 6,684,821; 5,574,822; 5,372,185; 5,485,879; 5,277,171; (B1)5,341,770; 5,660,165; 5,596,952; 5,682,666; 4,904,428; 5,023,031; 5,000,893; 4,669,448; 4,829,983; 4,808,356; 5,115,767; 5,092,519; 5,052,346; 4,416,222; 4,628,184; 4,861,968; 4,672,919; Re. 34,534. OTHER U.S. AND FOREIGN PATENT APPLICATIONS PENDING. CURRENT CANADIAN PATENTS: 1,272,914; 1,280,043; 1,289,832; 2,045,862; 2,112,515; 2,108,186; 2,107,012, 2,092,105.

Photo is of RTV-52-L

Bradford White PowerStor Series™ SS Energy Saver Stainless Steel Indirect Water Heater

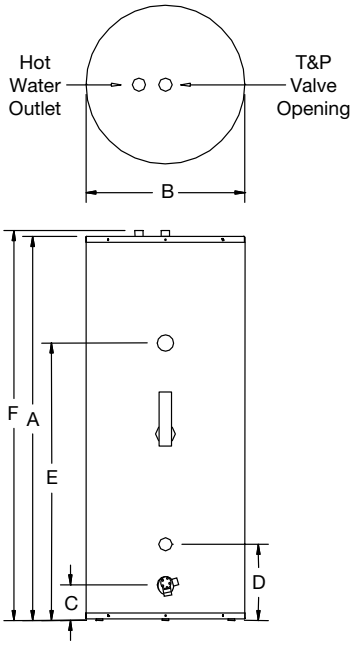

Energy Saver Models

These water heaters meet or exceed the insulating standards established under ASHRAE Standard 90.1b (current edition).

Bradford White PowerStor Series™ SS

Specifications

	Volume	Dimensions								
		A	B	C	D	E	F			
		Height	Dia.	Cold Supply	Boiler Return	Boiler Supply	Ht. to HW Outlet	Return	Supply	Shipping Weight
Model	Gallons	in mm	in mm	in mm	in mm	in mm	in mm	in mm	in mm	lbs kg
RTV-40-L	39.6	38 965	23¾ 603	7¼ 184	11½ 292	27¼ 692	38½ 98	— —	— —	83 38
RTV-52-L	51.3	47¾ 1213	23¾ 603	7¼ 184	11½ 292	27¾ 705	48¼ 1226	— —	— —	93 42
RTV-75-L	74.5	65½ 1664	23¾ 603	7¼ 184	11½ 292	28 711	66 1676	— —	— —	117 53
RTV-75D-L	74.5	65½ 1664	23¾ 603	7¼ 184	11½ 292	27½ 699	66 1676	38 965	54 1372	130 59
RTV-119-L	118.9	62 1575	31 787	10¼ 260	16¾ 425	44⅜ 1127	62½ 1588	— —	— —	315 142

	Coil Capacity		Performance							
							@180° F Supply		@200° F Supply	
Model	USG	Liters	Heat Surface Area(ft²)	Boiler Flow US GPM	Gross Boiler Output BTU/HR	Pressure Drop (Ft. W.C.)	First Hour @140° F	GPH Rec. @ 90° F Rise	First Hour @140° F	GPH Rec. @ 90° F Rise
RTV-40-L	1.17	4.43	7.64	11	136,000	5.3	151	111	182	141
RTV-52-L	1.56	5.91	10.01	11	173,000	8.7	192	141	231	180
RTV-75-L	1.56	5.91	10.01	11	190,000	8.7	216	136	253	173
RTV-75D-L	2.34	8.86	15.28	22	265,000	10.6	295	215	355	275
RTV-119-L	4.60	17.4	21.31	15	252,000	3.1	298	178	337	217

Notes:
1) Inlet water temperature based on 50°F.
2) RTV-75D-L has 2 coils.
3) RTV-119 supplied with 3 extra plugged tappings (see manual).
4) RTV-119 equipped with steel casing.
5) ¾" supply/return piping is recommended on heat source side.

General

All units are certified at 300 PSI (2068 kPa) test pressure and 150 PSI working pressure (1034 kPa).
All potable water connections are ¾" (19mm) NPT (1¼" (32mm) NPT on RTV-119).

Dimensions and specifications subject to change without notice in accordance with our policy of continuous product improvement.

6-Year Limited Warranty on Component Parts

BRADFORD WHITE CORPORATION has a 6-year warranty on replaceable parts–thermostat, drain valve. These quality components are manufactured for us by industry leaders and will be replaced in the event of failure during the parts warranty period (exclusive of shipping and re-installation cost.)§

Limited Lifetime Tank and Heat Exchanger Warranties

BRADFORD WHITE CORPORATION LIMITED WARRANTY: Protects your investment in a quality stainless steel water heater and heat exchanger. If the tank or heat exchanger leaks for reasons of faulty materials, workmanship, or corrosion within the warranty period, the entire unit will be replaced with a comparable unit of our manufacture (exclusive of shipping and re-installation cost.)§

§ Some states do not allow limitations on warranties. (For products installed in USA, Canada and Puerto Rico) See complete copy of the warranty included with the heater.

BRADFORD WHITE®
CORPORATION
Ambler, PA

For U.S. and Canada field service, contact your professional installer or local Bradford White sales representative.

Sales/**800-523-2931**
*Fax/**215-641-1670***

Technical Support/**800-334-3393**
*Fax/**269-795-1089***

Warranty/**800-531-2111**
*Fax/**269-795-1089***

International:
Telephone/**215-641-9400**
*Telefax/**215-641-9750***

Fax on Demand:
888-538-7833

www.bradfordwhite.com

BRADFORD WHITE-CANADA® INC.
Mississauga, ON

Sales/Technical Support
866-690-0961
905-238-0100

*Fax/**905-238-0105***

www.bradfordwhitecanada.com

Count On Bradford White For *Everything* Hot Water

For Residential, Commercial and Snowmelt Applications

Job Name _____ Contractor _____

Job Location _____ Approval _____

Engineer _____ Contractor's P.O. No. _____

Approval _____ Representative _____

RadiantPEX-AL™

RadiantPEX-AL Tube

Sizes: 1/2", 5/8", 3/4", 1"

Watts Radiant's RadiantPEX-AL is a multi-layered, cross-linked polyethylene tubing with an aluminum inner core for radiant floor heating and snowmelting applications and distribution piping. RadiantPEX-AL is manufactured with an integral aluminum oxygen layer that limits oxygen diffusion through the walls of the tubing to less than 0.006g/m^3/day at 40°C (104°F) water temperature.

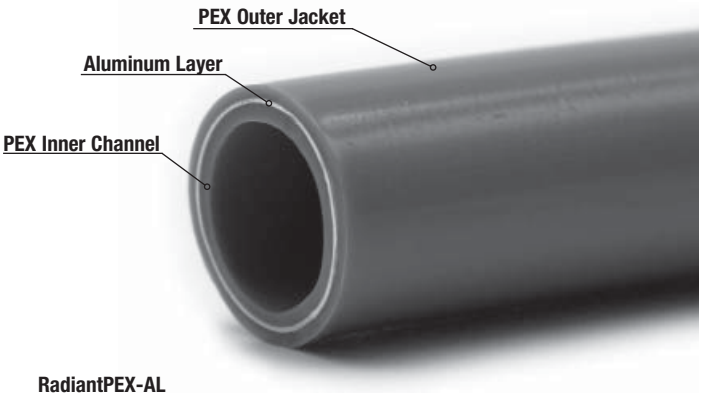

Specifications

System shall be installed using Watts Radiant RadiantPEX-AL. All connections shall be made using Watts Radiant's Press or Compression fittings and in accordance with all corresponding installation guidelines.

MAX TEMPERATURE	MAX PRESSURE
200°F	100 psi
180°F	125 psi
140°F	160 psi
73°F	200 psi

Installation

RadiantPEX-AL must be installed in accordance with all Watts Radiant installation procedures, including information provided in the RadiantPEX-AL installation manual and guidelines.

RadiantPEX-AL connections should not be used with wrot copper PEX fittings. Fittings should not be installed when the ambient temperature is below 30°F (0°C).

Standards and Listings

Manufactured in accordance with American society for Testing and Materials (ASTM) F-1281.

Tested and listed by the National Sanitation foundation (NSF-pw – Standards 14 and 61 and NSF-rfh).

Carries the UPC certification mark, as approved by the International Association of Plumbing and Mechanical Officials (IAPMO).

	MODEL #	ORDER#	DESCRIPTION	LENGTH	NOM. ID	NOM. OD	MIN. BEND RADIUS (IN)	FLUID CAPACITY (GAL/1000')
COILS	RL08-300-0R	81007602		300'				
	RL08-500-0R	81007601	1/2" RadiantPEX-AL Coil	500'	0.47 in	0.63 in	3.2 in	9.1
	RL08-1000-0R	81007603		1,000'				
	RL10-300-0R	81007605	5/8" RadiantPEX-AL Coil	300'	0.63 in	0.79 in	4.0 in	16.2
	RL10-1200-0R	81007606		1,200'				
	RL12-100-0R	81007607		100'				
	RL12-300-0R	81007608	3/4" RadiantPEX-AL Coil	300'	0.79 in	0.98 in	5.5 in	25.3
	RL12-500-0R	81007609		500'				
	RL16-100-0R	81007610	1" RadiantPEX-AL Coil	100'	0.98 in	1.26 in	6.5 in	39.5
	RL16-300-0R	81007611		300'				
STIX	RL08-20-0R	81008573	1/2" RadiantPEX-AL Stix, 25/Bundle	20'	0.47 in	0.63 in	3.2 in	9.1
	RL10-20-0R	81008574	5/8" RadiantPEX-AL Stix, 25/Bundle	20'	0.63 in	0.79 in	4.0 in	16.2
	RL12-20-0R	81008575	3/4" RadiantPEX-AL Stix, 25/Bundle	20'	0.79 in	0.98 in	5.5 in	25.3
	RL16-20-0R	81008576	1" RadiantPEX-AL Stix, 10/Bundle	20'	0.98 in	1.26 in	6.5 in	39.5

WattsRadiant
Floor Heating & Snowmelting
A subsidiary of Watts Water Technologies, Inc.

USA: 4500 East Progress Place, Springfield, MO 65803; www.wattsradiant.com
Canada: 5435 North Service Rd., Burlington, ONT. L7L 5H7; www.wattscanada.ca

WattsRadiant
Floor Heating & Snowmelting

RadiantPEX® Master Specification

SYSTEM MANUFACTURER
Watts Radiant, Inc.
4500 E. Progress Place
Springfield, MO 65803-8816
Phone: 417-864-6108; Fax: 417-864-8161
Web: www.wattsradiant.com

AREA REPRESENTATIVE
Representative's Name: _____
Address: _____
City: _____ State: _____ Zip:_____
Phone: (_____)_____ Fax (_____)_____
Contact Person: _____

SECTION 15840: Hydronic Radiant Floor Heating and Snowmelting

PART 1: General

RELATED DOCUMENTS

Drawings and general provisions of Contract, including General and Supplementary Conditions and Division-1 Specification sections, apply to work of this section.

Refer to Division-15 Basic Mechanical Materials & Methods sections apply to work of this section.

Refer to Division-3 Concrete for structural requirements of concrete slabs.

DESCRIPTION OF WORK

Extent of radiant floor heating and snowmelting work is indicated by drawings and schedules, and by requirements of this section.

Types of radiant floor heating applications for this project include the following:

Concrete Slab: Three inches (3") or greater in thickness.

Concrete Cap: One and one-half inches (1-1/2") up to three inches (3") in thickness.

Thinslab or Mudset: One and one-half inches (1-1/2") or greater thickness.

Sandwich™: Installed above a wood subfloor or above a concrete slab between sleepers.

Underfloor: Installed with the use of heat transfer plates or with an approved suspended method.

Types of snowmelting applications for this project include the following:

Slab Snowmelting: Four inches (4") or greater in thickness.

Brick Paver Snowmelt: Install in two inches (2") or greater sand or gravel below pavers.

Refer to other Division-15 sections for boilers, water heaters, and water source heat pumps; other heat sources, pumps, piping, and other hydronic appurtenances not work of this section.

Refer to Division-15 Section Automatic Temperature Controls for the following work: Interlock wiring between electrically-operated pumps, valves, and their respective field-installed indicating and control devices.

Refer to other Division-16 sections for the following work: Power supply wiring from power source to power connection for heat sources and pumps. Include starters, disconnects, and required electrical devices; except where specified as furnished or factory installed by manufacturer.

QUALITY ASSURANCE

Manufacturer's Qualifications: Firms regularly engaged in the manufacturing of hydronic radiant floor heating and snowmelting products, of types and size required, whose products have been in satisfactory use in similar service for not less than five (5) years. Tubing shall have a minimum of a twenty-five (25) year, non-prorated warranty including tubing installed at temperatures above freezing and/or is exposed to sunlight for up to thirty (30) days. Tubing shall be of a silane construction, high-grade cross-linked polyethylene tubing.

CODES, LISTINGS, STANDARDS

ASTM — RadiantPEX is manufactured to ASTM F-876 and F-877 standards, and to SDR-9 dimensions.

NSF-pw — RadiantPEX is tested and listed by the National Sanitation Foundation to Standards 14 and 61.

UPC UMC — RadiantPEX carries both the UPC amd UMC certification mark, as approved by the International Association of Plumbing and Mechanical Officials.

ES — RadiantPEX is listed by the International Code Council Evaluation Service (ICC-ES) Report #ESR-1155.

NSF C — All RadiantPEX labeled with "cNSF-CAN/B.137.5" is certified to CSA Standard B137.5 by NSF.

SUBMITTALS

Product Data: Submit manufacturer's specifications for radiant floor heating and snowmelting products showing dimensions, temperature capacities (both constant and intermittent), pressure ratings (both operating and burst), flow rates, material composition, and bend radius.

Shop Drawings: Submit shop drawings within thirty (30) days of bid date showing representative radiant floor tube spacings and manifold locations on a per-zone basis, appropriate construction details, and field connection details. Include information on all parts of the system being provided by the manufacturer. Submit three (3) copies of each shop drawing.

Control Sequence: Submit control manufacturer's sequence of operation for the radiant floor heating and snowmelting portions of this project, if not previously described by the architect/engineer in Division-15 Automatic Temperature Controls. Provide a written sequence describing operation and logic, along with a schematic wiring diagram.

Samples: Submit three (3) twelve-inch (12") samples of each type and size of radiant floor tubing being furnished.

Maintenance Data: Submit maintenance instructions, including repair of damaged components and a spare parts list. Include product data and drawings in accordance with requirements in Division-1.

DELIVERY, STORAGE AND HANDLING

Comply with manufacturer's instructions for unloading radiant floor heating and snowmelting materials and components, and moving them to their final locations.

Handle system components carefully to prevent damage, breaking or scoring. Do not install damaged system components; refer to manufacturer's guidelines. Project architect/engineer to determine whether to repair or replace. Store radiant floor tubing and components to protect from physical damage, and construction debris.

Tubing shall be capable of withstanding exposure to direct sunlight without degradation for a period of at least thirty (30) days prior to installation. Tubing shall be capable of being installed directly on conventional base rock or sand fill material. The tubing can be pulled through holes drilled in construction framing and can be stapled directly to the top of the subfloor, or attached to the underside of the subfloor with the use of aluminum plates or suspension clips. Tubing shall be capable of bending at minimum bend radius (see Part 3), at temperatures above 50°F, without detrimental effect. Additionally, the tubing can be kinked without detrimental effect and shall be capable being restored to its original condition after kinking with the use of applied heat or a physical repair.

PART 2: PRODUCTS

RADIANT FLOOR TUBING (RadiantPEX)

Provide radiant tubing in lengths and locations as indicated, with capacities, sizes, spacings, and depths as indicated by drawings, schedules, and/or RadiantWorks® computer printout. Radiant tubing shall be a single layer, cross-linked polyethylene extrusion with an outer layer composed of an EVOH oxygen barrier. Tubing dimensions and capacities shall be as shown on the RadiantPEX Submittal. Tubing shall conform to the Standard Thermoplastic Pipe Dimension Ration (SDR-9). Tubing shall contain a minimum cross-linking value of 65% and no greater than 89%, inclusive.

The radiant tubing shall be warrantied to 180°F in hydronic heating applications without detrimental efffect. Tubing shall conform to the following operational conditions:

Rated Temperature (°F)	Hydrostatic Design (psi)	Operational Pressure (psi)
73.4	630	160
180	400	100
200	315	80

Burst Pressure Requirements

	Temperature (°F)		
I.D. Tubing Size	73.4	180	200
1/4"	870	390	330
3/8"	620	275	235
1/2"	480	215	185
5/8" and larger	475	210	180

Heat transfer fluids shall only be water or water/glycol mixtures. Use of corrosion-proofing chemicals are permitted and recommended. Use of other heat transfer fluids such as oil, alcohol, or automotive glycol, are not permitted.

MANIFOLDS

Copper Manifolds: Materials shall be of type L copper trunks and copper or brass base branches with Watts Radiant brass tee (sweat) branches. Connections shall be soldered with a lead-free, high-strength solder. Standard diameter is one inch (1") with other diameters available or as specified up to four inches (4"). Manifolds shall be fitted with ball valves (mini or standard size) or zone valves (electric or non-electric type) for flow control and/or isolation purposes as specified by drawings and/or schedules. Manifolds are optionally fitted with vent/purge assemblies for bleeding air, or unions for acceptance of pressure test kits. RadiantPEX shall be attached to the manifold branches by one of the following methods: CrimpRing, SlideLock, or T-20 Compression. Each to be applied in accordance to manufacturer's specifications.

Brass Manifolds: Materials shall be of brass trunks fitted with Watts Radiant brass base branches, brass ball valves, and brass tee branches. Connections shall be soldered with a lead-free, high-strength solder. Standard diameter is one inch (1"). Manifolds shall be fitted with ball valves (mini or standard) or zone valves (electric or non-electric type) for flow control and/or isolation purposes as specified by drawings and/or schedules. Manifolds are optionally fitted with vent/purge assemblies for bleeding air or unions for acceptance of pressure test kits. RadiantPEX shall be attached to the manifold branches by one of the following methods: CrimpRing, SlideLock, or T-20 Compression. Each to be applied in accordance to manufacturer's specifications.

ACCESSORIES (Contractor to provide the following):

Repair Kit: One (1) for each size of radiant floor tubing used in the project.

Cable Tie: One (1) every eighteen inches (18") of tubing.

Plate: One (1) every twenty-four inches (24") to thirty inches (30") of tubing for underfloor applications.

Suspension Clip: One (1) every twenty-four inches (24") to thirty inches (30") of tubing for underfloor applications.

Staple: One (1) every eighteen inches (18") of tubing for Thin-slab applications.

NailTite: One (1) every ten feet (10') of tubing for framed floor applications, when used with staples.

Universal Manifold Bracket: One (1) pair per manifold set.

Staple Gun: Minimum of one (1) per project where staples are needed. Contractor to determine if more are needed. Size of staple gun determined by the diameter of tubing.

PEX Unwinder: Minimum of one (1) per project. Contractor to determine if more are necessary.

Pressure Test Kit: Minimum of one (1) per project. Contractor to determine if more are necessary.

Primary/Secondary Pumps: Contractor to determine quantities needed based on system design.

Tempering Valve: Sizes, quantities, and temperature ranges shown by drawings and/or specifications.

Variable Speed Injection Pump Control (VIP): Quantity as shown in drawings/ specifications.

Micro-bubble Air Remover: Size/quantities shown in drawings or specifications.

RECOMMENDED APPLICATIONS

Concrete Slab: Secure tubing to rewire or rebar by mechanical attachments every eighteen inches (18") and at the midpoint of each turn or bend, with a minimum of two inches (2") of concrete coverage above the top of the tubing. More coverage may be required depending on load requirements.

Concrete Cap: Secure tubing to existing concrete or insulation by mechanical attachments every eighteen inches (18") and at the midpoint of each turn or bend; with a minimum of three-fourths of an inch (3/4") concrete coverage above the top of the tubing for interior light duty applications, and a minimum of two inches (2") of concrete coverage above the top of the tubing for exterior applications. More coverage may be required depending on load requirements.

Thin slab or Mudset: Staple or secure tubing by mechanical attachments every eighteen inches (18"), and at the midpoint of each turn or bend, to a wooden subfloor with a minimum of three-fourths of an inch (3/4") coverage above the top of the tubing.

Sandwich™: Secure tubing by mechanical attachments every eighteen inches (18"), and at the midpoint of each turn or bend, to the top of foil-faced insulation, wood subfloor between sleepers or on top of existing concrete slab. Sleeper height to be adjusted as necessary for tubing to maintain continuous contact with flooring above. Provide sleepers at spacings recommended by flooring manufacturer.

Underfloor: Secure tubing by mechanical attachments every thirty inches (30") or less, or by metal plates or suspension clips. (Plate/clip measurements are made from leading edge to leading edge.)

Slab Snowmelt: Secure tubing to rewire or rebar by mechanical attachments every eighteen inches (18"), and at the midpoint of each turn or bend, with a minimum of three inches (3") of concrete coverage above the top of the tubing. More coverage may be required depending on load requirements.

Brick Paver Snowmelt: Secure tubing to rewire or rebar by mechanical attachments every eighteen inches (18"), and at the midpoint of each turn or bend, with a minimum of one inch (1") of concrete or sand coverage above the top of the tubing. More coverage may be required depending on load requirements.

PART 3: EXECUTION

INSPECTION

Examine areas and conditions in which the radiant floor tubing is to be installed. Do not proceed with work until unsatisfactory conditions have been corrected in a manner acceptable to the installer, the architect/engineer, and/or the owner.

INSTALLATION OF RADIANT FLOOR TUBING

General: Install tubing as indicated by architect/engineer on drawings, schedules, and specifications, in accordance with the manufacturer's installation instructions. Locate tubing in the floors, walls, or ceilings as indicated; cover areas continuously wall to wall at specified spacings unless otherwise indicated. Provide insulation as indicated by architect/engineer drawings, or in accordance with the manufacturer's instructions. Provide pressure testing of between 50 and 100 psi for a minimum of twenty-four (24) hours prior to, and during the pour for concrete applications; and for twenty-four (24) hours after all other applications. Install access panels centered in front of each manifold set.

Minimum Bend Radius for Radiant Tubing*

3/8" I.D. = Four inch (4") radius	3/4" I.D. = Seven inch (7") radius
1/2" I.D. = Five inch (5") radius	1" I.D. = Ten inch (10") radius
5/8" I.D. = Six inch (6") radius	

*Radii relative to coil direction.

ADJUSTING AND CLEANING

General: After construction is completed (including painting), clean exposed surfaces and components inside cabinets and in mechanical rooms, where accessible according to manufacturer's instructions. Repair any damaged materials prior to system start-up.

System Start-Up and Balancing: Provide system start-up, air purging and balancing to ensure proper operation. Check pumps for flows, valves for proper setting and operation, and water temperature and pressure levels in accordance with design specification and manufacturer's recommendations. System will operate properly for two (2) days before the owner and/or the architect/ engineer shall be required to certify system compliance.

Note: Radiant Tubing Schedule available from Watts Radiant upon request.

For Residential, Commercial and Snowmelt Applications

Job Name _____ Contractor _____

Job Location _____ Approval _____

Engineer _____ Contractor's P.O. No. _____

Approval _____ Representative _____

Compression Fitting

RadiantPEX-AL Connection

Sizes: 1/2", 5/8", 3/4", 1"

Compression fittings are designed to be used in radiant heating and snowmelting applications, with water or water/glycol solutions. Compression fittings are designed to be used solely with RadiantPEX-AL tubing. No other tubing type may be used. Fittings are available in a variety of Compression x Sweat, Compression x NPT or Compression x BSP connections.

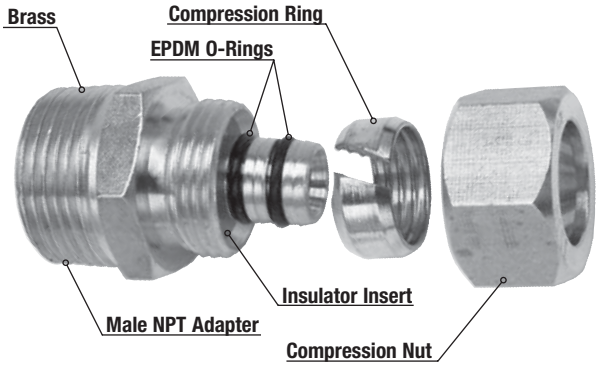

Compression Fitting

Specifications

System shall be installed using Watts RadiantPEX-AL tubing and fittings. All connections shall be made in accordance with corresponding installation guidelines.

Connections shall use Watts Radiant Compression fittings and RadiantPEX-AL composite cross-linked polyethylene tubing.

Material	Properties
Insert Barb/Compression Nut	Brass
Compression Ring	Brass
O-Rings	EPDM
Insulator	Polyethylene
Nominal Barb Size	1/2", 5/8", 3/4", 1" od
Connection Type	Sweat or NPT
Max. Operating Temperature	180°F
Max. Operating Pressure	100 psi

Installation

RadiantPEX-AL must be installed in accordance with all Watts Radiant installation procedures, including information provided in the RadiantPEX-AL installation manual and guidelines.

1. Cut a clean, square end to the tube.
2. Use the Reamer tool to shape and prep the tubing.
3. Slide the compression nut over the tubing.
4. Slide the compression ring over the tubing.
5. Make sure the insulator insert is in place at the base of the fitting.
6. Slide the tubing over the fitting. Make sure the tubing is seated against the insulator insert.
7. Slide the compression nut up and begin threading it onto the base. The compression ring will automatically be positioned over the fitting.
8. Use a box-end wrench to complete the connection **(do not use a crescent wrench)**. Tighten the connection until snug and then an additional 1/4 turn.

Standards and Listings

Manufactured in accordance with American society for Testing and Materials (ASTM) F-1281.

Carries the UPC certification mark, as approved by the International Association of Plumbing and Mechanical Officials (IAPMO).

Compression Fittings (☑ all that apply)

☑	Description	1/2"	5/8"	3/4"	1"
☐	Brass Fitting Adapter, Male Swt	☐	☐	☐	☐
☐	Brass Sweat Adapter, Female Swt	☐	☐	☐	☐
☐	Brass MNPT Adapter	☐	☐	☐	☐
☐	Couplings, Equal	☐	☐	☐	☐
☐	Elbow, Compression x Male Swt	☐	☐	☐	☐
☐	Elbow, Compression x Female Swt	☐	☐	☐	☐
☐	Elbow, Compression x MNPT	☐	☐	☐	☐
☐	Elbow, Comp x Comp, Equal	☐	☐	☐	☐
☐	Tee, Equal	☐	☐	☐	☐
☐	Tee, Unequal	☐	☐	☐	☐
☐	Tee, NPT	☐	☐	☐	☐

Fittings should not be installed when the ambient temperature is below 30°F (0°C).

Compression fittings are for heating applications only. Do not use compression fittings for potable applications.

WattsRadiant
Floor Heating & Snowmelting
A subsidiary of Watts Water Technologies, Inc.

For Residential, Commercial and Snowmelt Applications

Job Name _____ Contractor _____

Job Location _____ Approval _____

Engineer _____ Contractor's P.O. No. _____

Approval _____ Representative _____

Compression Repair Kit

RadiantPEX-AL Connection

Sizes: 1/2", 5/8", 3/4", 1"

Compression fittings are designed to be used in radiant heating and snowmelting applications, with water or water/glycol solutions. Compression fittings are designed to be used solely with RadiantPEX-AL tubing. No other tubing type may be used.

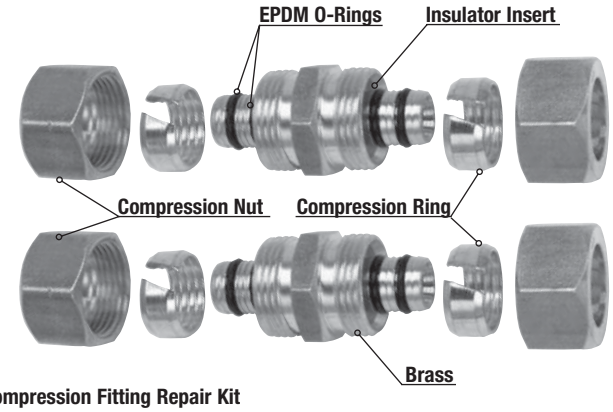

Compression Fitting Repair Kit

Specifications

System shall be installed using Watts RadiantPEX-AL tubing and fittings. All connections shall be made in accordance with corresponding installation guidelines.

Connections shall use Watts Radiant Compression fittings and RadiantPEX-AL composite cross-linked polyethylene tubing.

Material	Properties
Insert Barb/Compression Nut	Brass
Compression Ring	Brass
O-Rings	EPDM
Insulator	Polyethylene
Nominal Barb Size	1/2", 5/8", 3/4", 1" od
Connection Type	Sweat or NPT
Max. Operating Temperature	180°F
Max. Operating Pressure	100 psi

Installation

RadiantPEX-AL must be installed in accordance with all Watts Radiant installation procedures, including information provided in the RadiantPEX-AL installation manual and guidelines.

1. Cut a clean, square end to the tube.
2. Use the Reamer tool to shape and prep the tubing.
3. Slide the compression nut over the tubing.
4. Slide the compression ring over the tubing.
5. Make sure the insulator insert is in place at the base of the fitting.
6. Slide the tubing over the fitting. Make sure the tubing is seated against the insulator insert.
7. Slide the compression nut up and begin threading it onto the base. The compression ring will automatically be positioned over the fitting.
8. Use a box-end wrench to complete the connection **(do not use a crescent wrench)**. Tighten the connection until snug and then an additional 1/4 turn.

Standards and Listings

Manufactured in accordance with American society for Testing and Materials (ASTM) F-1281.

Carries the UPC certification mark, as approved by the International Association of Plumbing and Mechanical Officials (IAPMO).

Compression Fittings (☑ all that apply)

☑	Description	Qty	Part #	Order #
☐	1/2" Compression Repair Kit	2	RLC16B-08	81007737
☐	5/8" Compression Repair Kit	2	RLC16B-10	81007738
☐	3/4" Compression Repair Kit	2	RLC16B-12	81007739
☐	1" Compression Repair Kit	2	RLC16B-16	81007740

CAUTION:
Use of materials not supplied by Watts Radiant to make a repair connection may eventually result in leaks. RadiantPEX-AL and fittings are engineered to work together. Watts Radiant extends no warranty — expressed or implied — to any failure or damage of any kind resulting from use of materials not supplied by Watts Radiant.

Fittings should not be installed when the ambient temperature is below 30°F (0°C).

Compression fittings are for heating applications only. Do not use compression fittings for potable applications.

WattsRadiant
Floor Heating & Snowmelting
A subsidiary of Watts Water Technologies, Inc.

USA: 4500 East Progress Place, Springfield, MO 65803; www.wattsradiant.com
Canada: 5435 North Service Rd., Burlington, ONT. L7L 5H7; www.wattscanada.ca

Product Bulletin:
Stainless Steel Manifolds

WattsRadiant
Floor Heating & Snowmelting

3131 W. Chestnut Expressway
Springfield, MO 65802
ph: 417.864.6108
fax: 417.864.8161
www.wattsradiant.com

Our new Stainless Steel manifolds offer several great features:

* *Flexible, modular and singular design system*
* *Easy-to-assemble construction*
* *Precise flow control and balancing*
* *Fittings for both PEX and Onix radiant tubing*
* *Control for hydronic floor heating, fan coil heating, or baseboard heating*
* *No sealant, no teflon*

Stainless Steel manifolds are sold in 1 to 12-branch pairs for easy assembly in the field. They are 1" AISI 304 Stainless Steel and can handle up to 12 gpm. Manifold sections are easily connected together, if more circuits are required. Simply thread two sections together with the use of 1" manifold coupling and tighten. Make sure the gasket is installed prior to assembly.

Manifolds Are Sold In Pairs:

1) Balancing Valve Manifold (with optional Actuator)
2) Flow Indicator Manifold

Accessories

Accessories include Vent/Purge Assembly, Valve Actuator, Transitional Fittings, Mounting Brackets (*standard with manifold pairs*), and Lockable Manifold Boxes ***(Vent/Purge, End Caps, Trunk Isolation Valves and Transition Fittings all have flat gaskets that must be installed without the use of sealants or teflon.)***

Flow Balancing

Balancing is achieved by either:

1. Adjusting the Balancing Knob, or
2. Adjusting the dial located under the Adjustment Cap. Dial is adjusted with the use of the Adjustment Key. The key comes attached to the manifold via nylon tie.

Flow can be visually fine-tuned by viewing the sight glass indicator while adjusting the balancing valve on the return manifold.

On-Off Circuit Control

For systems requiring individual circuit thermostatic control, an electronic Valve Actuator is installed. Valve Actuators are four-wire, to connect to the zone thermostat and use end switch wires to activate the circulator. With this arrangement, every room can be thermostatically controlled from one central distribution manifold.

Note:

Depending on the actuator style used, some circuit adjustment may be necessary.

Additional flow control can be achieved by installing individual circuit isolation mini-ball valves. These valves allow for balancing and shut-off capabilities without having to remove the adjustment cap or thermal actuator.

Note:

1) Stainless Steel Manifolds can be used to control fan coils or baseboard units, as well as floor heating.
2) Manifolds are not intended to exceed 87 psi at 194°F operating conditions.

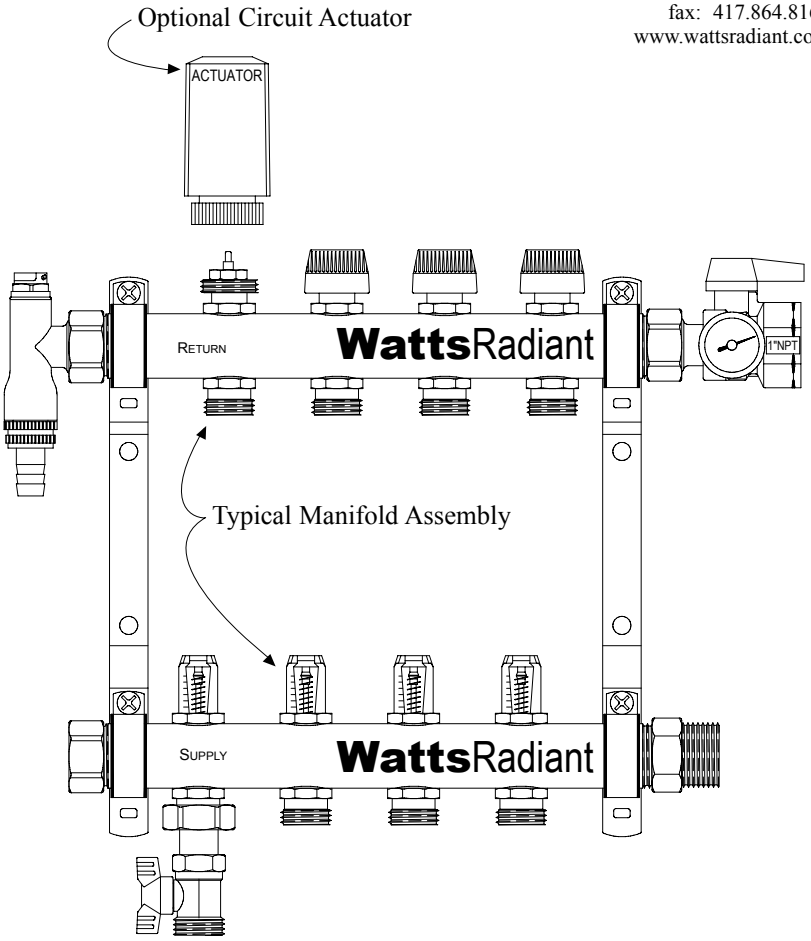

ITEM NUMBER	DESCRIPTION	LIST PRICE
D3804000SS	M1 Stainless Steel Manifold Pair with Flow Meters	$144.00
D3803002SS	M2 Stainless Steel Manifold Pair with Flow Meters	$178.00
D3803003SS	M3 Stainless Steel Manifold Pair with Flow Meters	$225.75
D3803004SS	M4 Stainless Steel Manifold Pair with Flow Meters	$273.00
D3803005SS	M5 Stainless Steel Manifold Pair with Flow Meters	$355.00
D3803006SS	M6 Stainless Steel Manifold Pair with Flow Meters	$383.25
D3803007SS	M7 Stainless Steel Manifold Pair with Flow Meters	$427.00
D3803008SS	M8 Stainless Steel Manifold Pair with Flow Meters	$472.50
D3803009SS	M9 Stainless Steel Manifold Pair with Flow Meters	$522.00
D3803010SS	M10 Stainless Steel Manifold Pair with Flow Meters	$572.25
D3803011SS	M11 Stainless Steel Manifold Pair with Flow Meters	$624.00
D3803012SS	M12 Stainless Steel Manifold Pair with Flow Meters	$677.25
D4201720-N	Trunk Isolation Ball Valve with Temperature Gauge	$48.90
D4201715-N	Vent and Purge Assembly	$35.70
D063064-N	Manifold End Cap	$6.06
D4201480-N	BSP to NPT Transition Fitting	$31.50
D402178-N	1" x 1" Manifold Coupling	$20.88
D4201480-N	Circuit Isolation Plug	$9.36
D4201710-N	Circuit Isolation Mini Ball Valve	$23.10
PZ656104	Valve Actuator	$63.00

Note:
- Order T-20 Compression PEX fittings or Onix fittings and clamps separately.
- Stainless Steel manifolds can be ordered fully-assembled with all optional components for 15% above the cost of all components.
- ***(Vent/Purge, End Caps, Trunk Isolation Valves and Transition Fittings all have flat gaskets that must be installed without the use of sealants or teflon.)***

Product Bulletin:

Stainless Steel Manifolds

WattsRadiant
Floor Heating & Snowmelting

3131 W. Chestnut Expressway
Springfield, MO 65802
ph: 417.864.6108
fax: 417.864.8161
www.wattsradiant.com

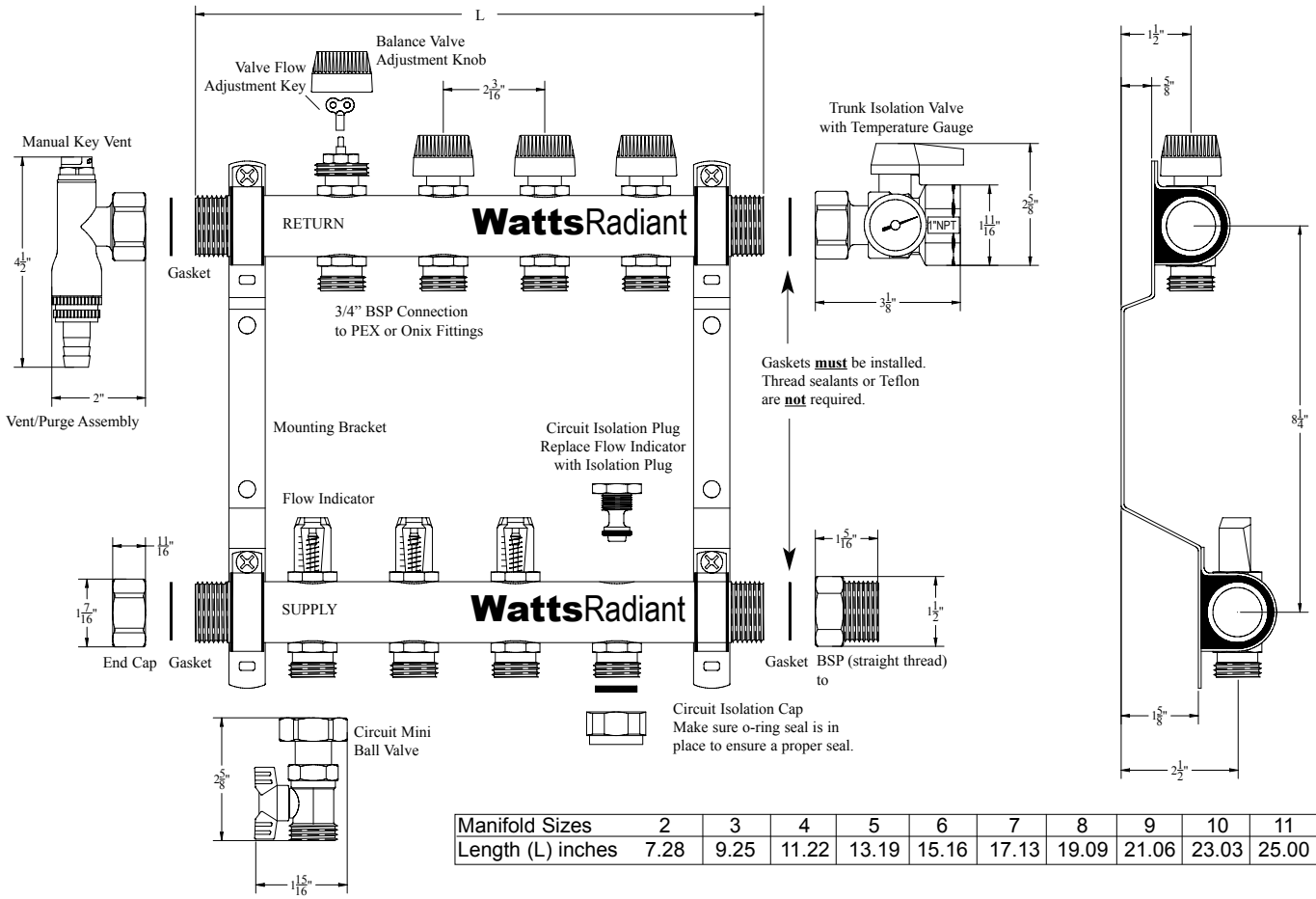

Manifold Sizes	2	3	4	5	6	7	8	9	10	11	12
Length (L) inches	7.28	9.25	11.22	13.19	15.16	17.13	19.09	21.06	23.03	25.00	26.97

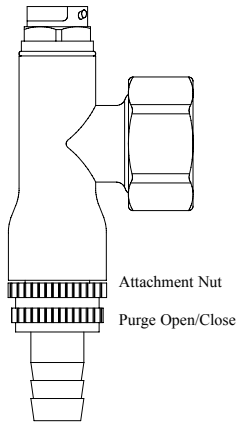

The manual vent at the top of the Vent/Purge assembly uses a directional discharge cap. Turn the white cap to aim the pressure discharge.

Vent/Purge Assembly incorporates a built in purge valve. The valve is opened by loosening the lower nut. To close the valve, tighten the lower nut.

The Attachment Nut should not be adjusted as this will remove the valve from the assembly.

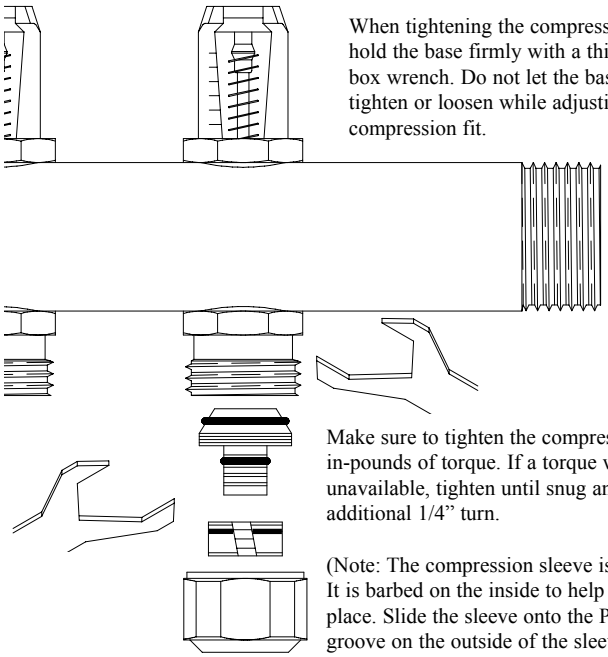

When tightening the compression nut, hold the base firmly with a thin profile box wrench. Do not let the base nut tighten or loosen while adjusting the compression fit.

Make sure to tighten the compression nut to 20 in-pounds of torque. If a torque wrench is unavailable, tighten until snug and then one additional 1/4" turn.

(Note: The compression sleeve is "directional". It is barbed on the inside to help lock the PEX in place. Slide the sleeve onto the PEX so the groove on the outside of the sleeve is closest to the insert fitting - see diagram above).

For Residential and Commercial Applications

Job Name _____ Contractor _____

Job Location _____ Approval _____

Engineer _____ Contractor's P.O. No. _____

Approval _____ Representative _____

WaterPEX® Tubing

WaterPEX® Tubing is a cross-linked polyethylene tubing used for potable water applications. WaterPEX® is manufactured without an oxygen barrier.

Temperature – Pressure

Maximum Working Pressure:

160psi @ 73.4ºF (23ºC)

100psi @ 180ºF (80ºC)

80psi @ 200ºF (93ºC)

Specifications

System shall be plumbed using Watts WaterPEX® cross-linked polyethelene pipe, and all joints shall be made using Watts brass CrimpRing™ and/or poly-alloy CrimpRing™ fittings using either the Watts copper CrimpRing™ or stainless steel CinchClamp™* crimping methods as outlined in the Watts WaterPEX® Installation Guidelines.

Installation Note

WaterPEX® must be installed in accordance with all Watts WaterPEX® installation procedures, including information provided in WaterPEX® installation manual and guidelines.

Connections

WaterPEX® is connected to WaterPEX® manifolds or barbed fittings using one of two connection systems, depending on manifold type or fitting system specified. See chart below:

✓	Fitting Style	Description
	CrimpRing Fittings	Ductile Copper CrimpRing™ compressed over WaterPEX/CrimpRing fitting.
	Compression Fittings	Brass Compression Nut tightened around WaterPEX® and CompNut™ fitting.

*** Note:** Watts WaterPEX CinchClamp™ fittings should not be used with wrot copper PEX fittings or poly-alloy fittings. Installations using CinchClamp™ fittings are not recommended when ambient temperature is below 32ºF (0ºC).

Approvals

- Manufactured in accordance with American Society for Testing and Materials (ASTM) F-876 and F-877 to SDR-9 dimensional standards
- Listed by the National Sanitation Foundation to NSF Standards 14 and 61 for use in potable water systems
- Listed by NSF to be in compliant to the Uniform Plumbing Code
- Labeled B137.5 which indicates that it is compliant to the CSA Standards B137.5

WATTS®

MODEL	NOMINAL TUBING SIZE				COIL/STICK LENGTH		BEND RADIUS		FLUID CAPACITY PER 100'		PKG. WEIGHT	
	I.D.		OD									
	in	*mm*	*in*	*mm*	*ft*	*cm*	*in*	*mm*	*gal*	*ltrs*	*lbs*	*kgs*
Red Coils												
WPTC06-100R	⅜	10	½	15	100	3048	4	102	0.53	2.01	4.5	2.0
WPTC06-500R	⅜	10	½	15	500	15240	4	102	0.53	2.01	23	10.4
WPTC08-100R	½	15	⅝	16	100	3048	5	127	0.96	3.65	5.5	2.5
WPTC08-300R	½	15	⅝	16	300	9144	5	127	0.96	3.65	14.5	6.6
WPTC08-500R	½	15	⅝	16	500	15240	5	127	0.96	3.65	24	10.9
WPTC08-1000R	½	15	⅝	16	1000	30480	5	127	0.96	3.65	54.5	24.7
WPTC12-100R	¾	20	⅞	22	100	3048	7	178	1.9	7.22	10.5	4.8
WPTC12-500R	¾	20	⅞	22	500	15240	7	178	1.9	7.22	45	20.4
WPTC12-1000R	¾	20	⅞	22	1000	30480	7	178	1.9	7.22	106	48.0
Blue Coils												
WPTC06-100B	⅜	10	½	15	100	3048	4	102	0.53	2.01	4.5	2.0
WPTC06-500B	⅜	10	½	15	500	15240	4	102	0.53	2.01	23	10.4
WPTC08-100B	½	15	⅝	16	100	3048	5	127	0.96	3.65	5.5	2.5
WPTC08-300B	½	15	⅝	16	300	9144	5	127	0.96	3.65	14.5	6.6
WPTC08-500B	½	15	⅝	16	500	15240	5	127	0.96	3.65	24	10.9
WPTC08-1000B	½	15	⅝	16	1000	30480	5	127	0.96	3.65	55	24.9
WPTC12-100B	¾	20	⅞	22	100	3048	7	178	1.9	7.22	10.5	4.8
WPTC12-500B	¾	20	⅞	22	500	15240	7	178	1.9	7.22	45	20.4
WPTC12-1000B	¾	20	⅞	22	1000	30480	7	178	1.9	7.22	106	48.0
White Coils												
WPTC04-100W	¼	8	⅜	10	100	3048	3	76	0.25	0.95	3.5	1.6
WPTC06-100W	⅜	10	½	15	100	3048	4	102	0.53	2.01	4.5	2.0
WPTC06-500W	⅜	10	½	15	500	15240	4	102	0.53	2.01	23	10.4
WPTC08-100W	½	15	⅝	16	100	3048	5	127	0.96	3.65	5.5	2.5
WPTC08-300W	½	15	⅝	16	300	9144	5	127	0.96	3.65	14.5	6.6
WPTC08-500W	½	15	⅝	16	500	15240	5	127	0.96	3.65	24	10.9
WPTC08-1000W	½	15	⅝	16	1000	30480	5	127	0.96	3.65	55	24.9
WPTC12-100W	¾	20	⅞	22	100	3048	7	178	1.9	7.22	10.5	4.8
WPTC12-500W	¾	20	⅞	22	500	15240	7	178	1.9	7.22	45	20.4
WPTC12-1000W	¾	20	⅞	22	1000	30480	7	178	1.9	7.22	106	48.0
WPTC16-100W	1	25	1⅛	29	100	3048	10	254	3.10	11.78	18	8.2
WPTC16-500W	1	25	1⅛	29	500	15240	10	254	3.10	11.78	90	40.8
WPTC20-100W	1¼	32	1⅜	35	100	3048	11	279	4.5	17.1	24	10.9
WPTC20-300W	1¼	32	1⅜	35	300	9144	11	279	4.5	17.1	71	32.2
Red Sticks												
WPTS08-50R (50 sticks)	½	15	⅝	16	20	610	5	127	0.96	3.65	55	24.9
WPTS12-25R (25 sticks)	¾	20	⅞	22	20	610	7	178	1.90	7.22	45	20.4
Blue Sticks												
WPTS08-50B (50 sticks)	½	15	⅝	16	20	610	5	127	0.96	3.65	55	24.9
WPTS12-25B (25 sticks)	¾	20	⅞	22	20	610	7	178	1.90	7.22	45	20.4
White Sticks												
WPTS08-50W (50 sticks)	½	15	⅝	16	20	610	5	127	0.96	3.65	55	24.9
WPTS12-25W (25 sticks)	¾	20	⅞	22	20	610	7	178	1.90	7.22	45	20.4
WPTS16-5W (5 sticks)	1	25	1⅛	29	20	610	10	254	3.10	11.78	50	22.7
WPTS20-5W (5 sticks)	1¼	32	1⅜	35	20	610	11	279	4.5	17.1	35	15.9
Tubing For Ice Makers – White Coils												
WPTC02-100W	⅛	16	¼	8	100	3048	1½	38	0.38	1.44	3	1.4

USA: 815 Chestnut St., No. Andover, MA 01845-6098; www.watts.com
Canada: 5435 North Service Rd., Burlington, ONT. L7L 5H7; www.wattscanada.ca

For Residential and Commercial Applications

Job Name _____ Contractor _____

Job Location _____ Approval _____

Engineer _____ Contractor's P.O. No. _____

Approval _____ Representative _____

Brass CrimpRing™ Elbows

Brass CrimpRing™ Elbows are used to make a 90º change between WaterPEX® pipe or between WaterPEX® pipe and threaded pipe.

Specifications

System shall be plumbed using Watts WaterPEX® cross-linked polyethelene pipe. All joints shall be made using Watts brass CrimpRing™ and/or polyalloy CrimpRing™ fittings using either the Watts copper CrimpRing™ or stainless steel CinchClamp™* crimping methods as outlined in the Watts WaterPEX® Installation Guidelines.

Installation Note

CrimpRing™ Elbows must be installed in accordance with all Watts WaterPEX® installation procedures, including information provided in WaterPEX® installation manual and guidelines.

Approvals

- Manufactured in accordance with American Society for Testing and Materials (ASTM) F-877 and F-1807
- Listed by the National Sanitation Foundation to NSF Standards 14 and 61 for use in potable water systems
- Listed by NSF to be in compliant to the Uniform Plumbing Code
- Labeled B137.5 which indicates that it is compliant to the CSA Standards B137.5

* **Note:** Watts WaterPEX CinchClamp™ fittings should not be used with wrot copper PEX fittings or poly-alloy fittings. Installations using CinchClamp™ fittings are not recommended when ambient temperature is below 32ºF (0ºC).

Crimp x Crimp

Crimp x MPT

CrimpRing™ x Sweat Elbows

Drop Ear Elbows

WATTS®

Dimensions – Weights

MODEL	INLET			OUTLET			PKG. WEIGHT	
	in	*mm*	*type*	*in*	*mm*	*type*	*lbs*	*kgs*
CrimpRing Elbows								
WP19B-06PB	⅜	10	Crimp Fitting	⅜	10	Crimp Fitting	1	0.4
WP19B-08PB	½	15	Crimp Fitting	½	15	Crimp Fitting	1	0.4
WP19B-1208PB	¾	20	Crimp Fitting	½	20	Crimp Fitting	2	0.9
WP19B-1212PB	¾	20	Crimp Fitting	¾	20	Crimp Fitting	2	0.9
WP19B-16PB	1	25	Crimp Fitting	1	25	Crimp Fitting	2	0.9
WP19B-20PB	1¼	32	Crimp Fitting	1¼	32	Crimp Fitting	3	1.4
WP20B-0806PB	½	15	Crimp Fitting	⅜	10	MPT	1	0.4
WP20B-0808PB	½	15	Crimp Fitting	½	15	MPT	1	0.4
WP20B-0812PB	½	15	Crimp Fitting	¾	20	MPT	2	0.9
WP20B-12PB	¾	20	Crimp Fitting	¾	20	MPT	2	0.9
WP21B-0812PB	½	15	Crimp Fitting	¾	20	Sweat	3	1.4
WP21B-12PB	¾	20	Crimp Fitting	¾	20	Sweat	3	1.4
Drop Ear Elbows								
WP22B-0608PB (2-eared)	⅜	10	Crimp Fitting	½	15	FPT	1	0.4
WP22B-08PB (2-eared)	½	15	Crimp Fitting	½	15	FPT	1	0.4
WP23B-08PB (3-eared)	½	15	Crimp Fitting	½	15	FPT	2	0.9
WP22B-1208PB (2-eared)	¾	20	Crimp Fitting	½	15	FPT	2	0.9
WP22B-12PB (2-eared)	¾	20	Crimp Fitting	¾	20	FPT	3	1.4

PlumBloc™ 81

Modular Water Distribution Manifold

INSTALLATION GUIDELINES

WATTS WaterPEX®
Advanced Plumbing Products

Toll-free: **800-276-2419** • Phone: **417-864-6108**
Fax: **417-864-8161** • **www.waterpex.com**

82

PlumBloc modular water distribution manifolds are designed to accommodate several easy installation options.

Horizontal Mounting Options

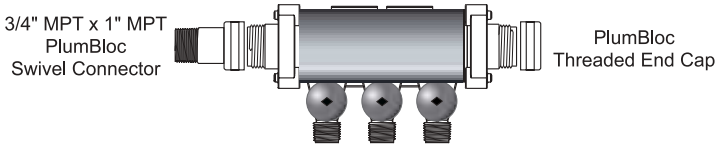

Water supply left, capped out

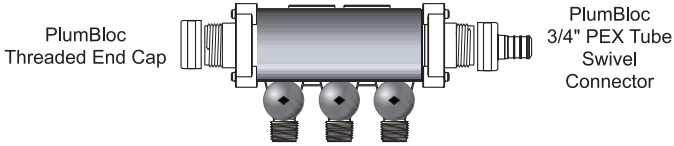

Water supply right, capped out

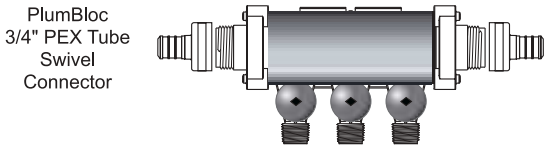

Mounted in-line of water supply

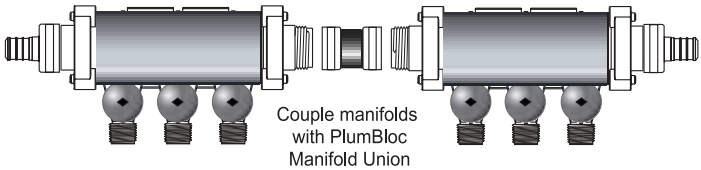

Connect multiple PlumBloc Manifolds

Vertical Mounting Options

Water supply may be from either top or bottom.

Be sure to properly support PEX distribution tubing in order to relieve strain from threaded ports. Exit the ports at 90° angle from the PlumBloc main and secure within 6".

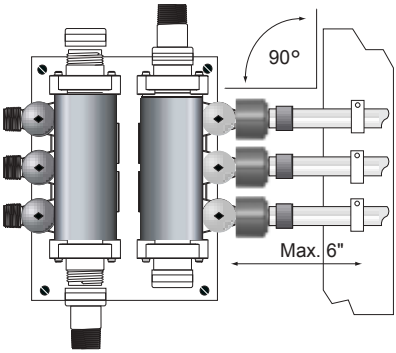

TOP VIEW

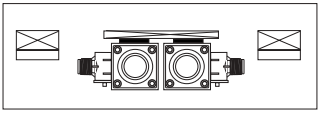

Wall studs may be drilled to act as tube supports. A 3/4" hole is recommended for 1/2" PEX.

Drilled stud holes must be in level alignment with the manifold ports.

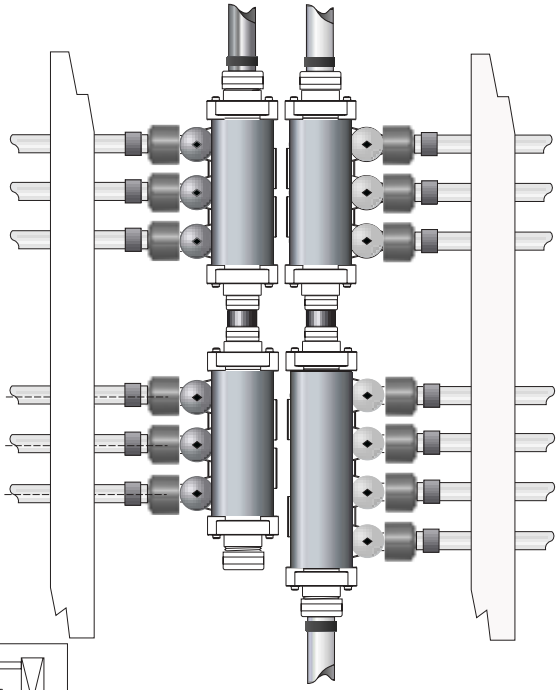

TOP VIEW

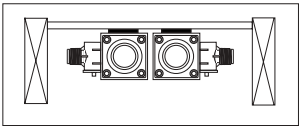

84

Horizontal Mounting Instructions

1. Use both mounting clips provided with each PlumBloc manifold.
2. Mounting clips shall be mounted level and parallel to each other ***before*** affixing the PlumBloc manifold.
3. Use two nails or screws per bracket to prevent misalignment.
4. For proper bracket spacing, measure distance between the center ribs of the first and last PlumBloc module (see Fig. 1.) Mark this distance on the selected mounting surface, then align the outside edge of each bracket with each end mark.
5. Complete mounting by firmly pushing the manifold toward the cllps (Fig. 3).

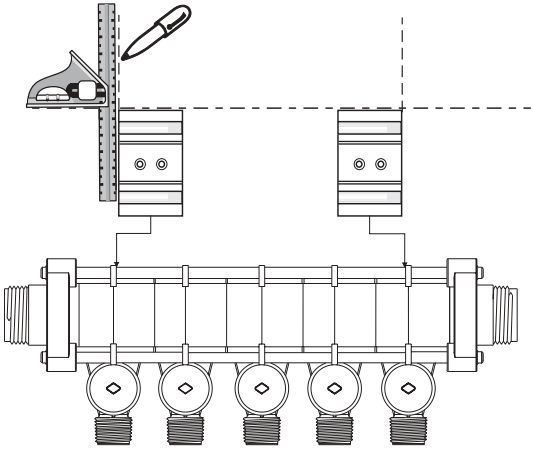

Fig. 1.

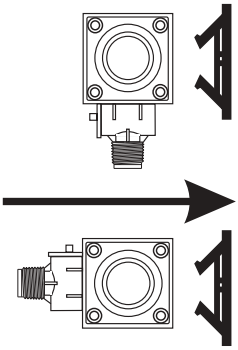

Fig. 2.

Press firmly toward the mounting clips until the clips snap between the top and bottom steel rods.

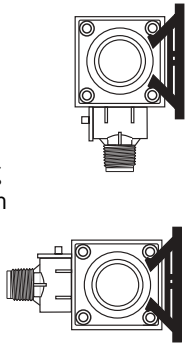

Fig. 3.

85

Vertical Mounting Instructions

1. PlumBloc manifolds may be mounted back-to-back on a single wall stud or side-by-side between two wall studs.
2. Use both mounting clips provided with each PlumBloc manifold.
3. Mounting clips shall be mounted level and parallel to each other ***before*** affixing the PlumBloc manifolds (Figs. 1, 2, and 3).
4. Follow the mounting clip spacing instructions as detailed in Step 4 of the Horizontal Mounting Instructions (see page 4).
5. Complete mounting by firmly pushing the manifold toward the clips.

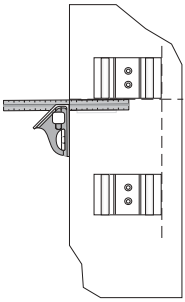

Fig. 1.

Back-to-back

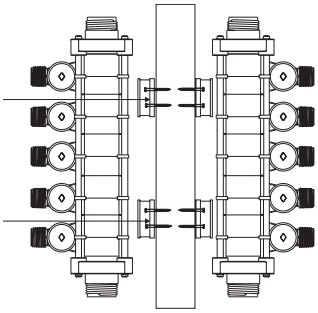

Fig. 2.

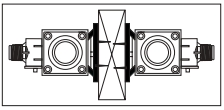

TOP VIEW

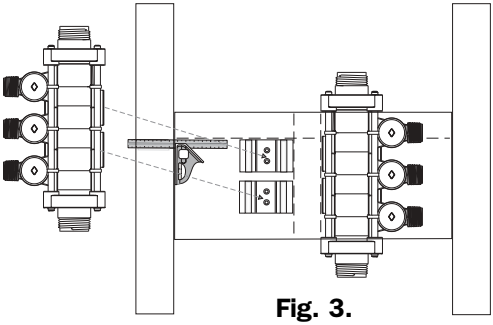

Fig. 3.

Within Stud Wall

TOP VIEW

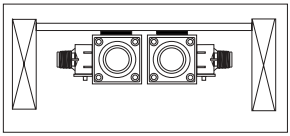

86

Connecting the Water Lines

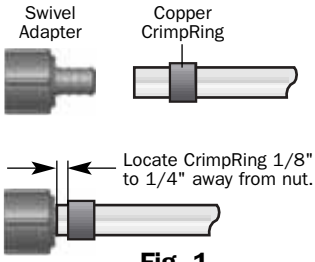

Fig. 1.

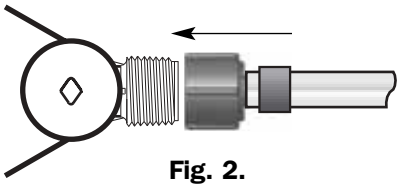

Fig. 2.

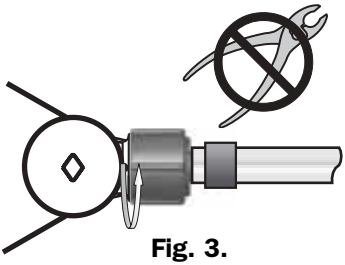

Fig. 3.

Port Connections

Cut each PEX distribution line squarely with a blade-type cutter. Make sure the swivel insert barb is pushed completely into the PEX tubing. Position the copper CrimpRing 1/8" to 1/4" away from the bottom of the nut (Fig. 1). Complete crimp in accordance with proper crimp guidelines.

Align the swivel adapter and PEX tube with the manifold outlet port and engage the threads (Fig. 2). Turn nut until it is hand tight, then another 1/4 turn for final snug fit (Fig. 3). Use only an adjustable wrench, if necessary. Pliers may distort or damage swivel nut. Do not use them.

DO NOT OVERTIGHTEN.

DO NOT USE THREAD PASTE OR TAPE.

Connecting the Supply Lines

PlumBloc main inlet-outlet threads are not standard National Pipe Threads and cannot connect to a common female threaded fitting such as a coupling or female bushing.

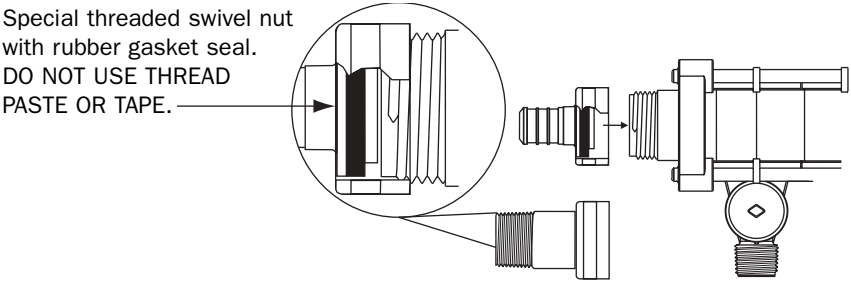

PlumBloc manifold adapters are available in swivel x 3/4" PEX insert or swivel x 3/4" or 1" MPT.

87

Designating Hot-Cold Supply

Each PlumBloc manifold is packaged with red and blue disks that are used to identify the supply ports for hot or cold water. Select the appropriate color disk and snap over the port valve stems. Be sure the disks are fully depressed over the stems.

Fig. 1.

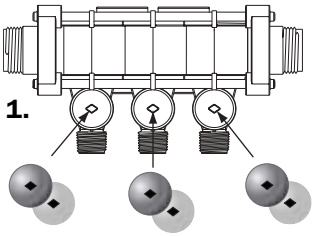

Fig. 2.

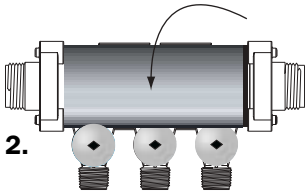

After the disks are installed, snap cover plate over steel tie rods.

Protecting the Manifolds

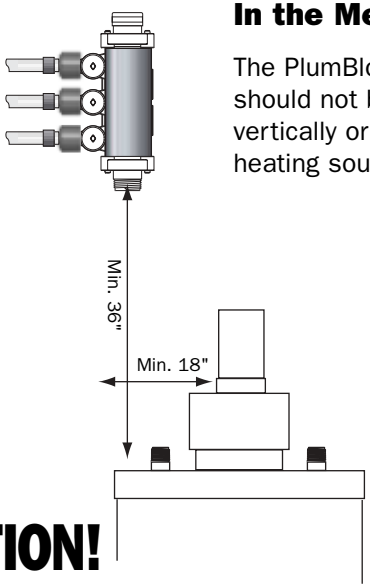

In the Mechanical Room

The PlumBloc water distribution manifold should not be mounted closer than 36" vertically or 18" horizontally from any water heating source or exhaust venting pipe.

CAUTION!

DO NOT INSTALL MANIFOLDS IN LOCATIONS WHERE THEY MAY BE EXPOSED TO FREEZING TEMPERATURES.

Be sure to properly insulate any wall cavity with an outside facing surface such as between an unheated garage and the house interior. Do not leave the PlumBloc manifold under water pressure if the structure will be unoccupied and unheated during periods when freezing weather may occur.

PlumBloc modular water distribution manifolds using 3/8" or 1/2" CTS-OD cross-linked polyethylene (PEX) potable water tubing represent state-of-the-art plumbing technology. Individual supply lines deliver hot or cold water directly from the manifold to the specific plumbing fixture.

One connection at the manifold and one connection at the fixture is all that is required. No other in-line fittings are necessary. Extra supply ports may be capped for future use. Dedicated water distribution lines result in improved system performance with better temperature-pressure balance and faster hot water delivery.

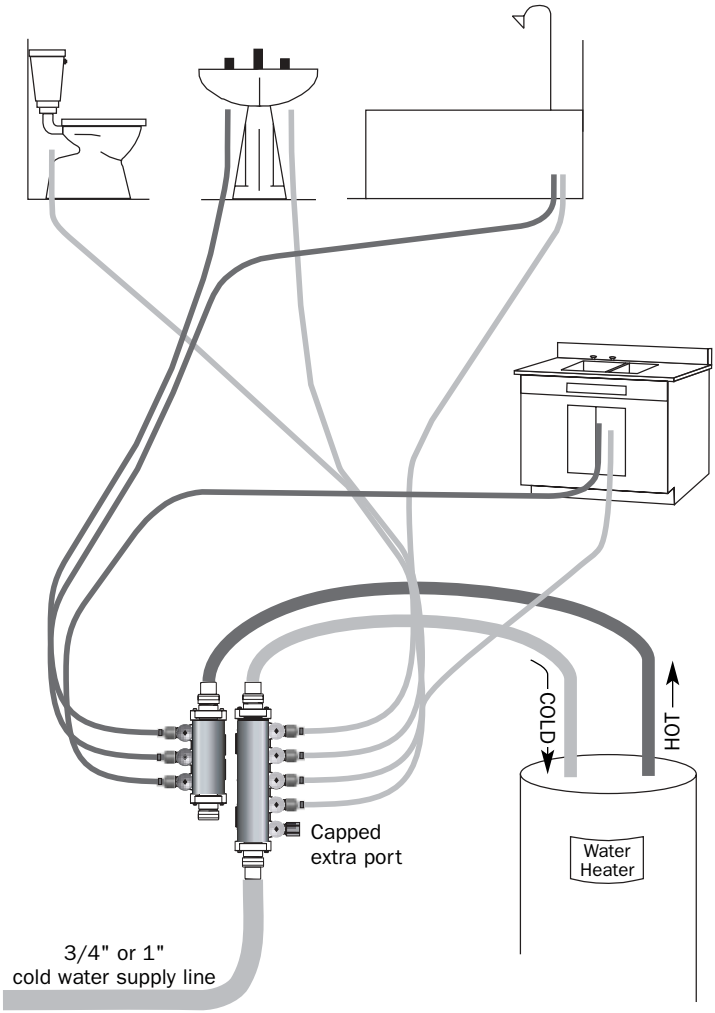

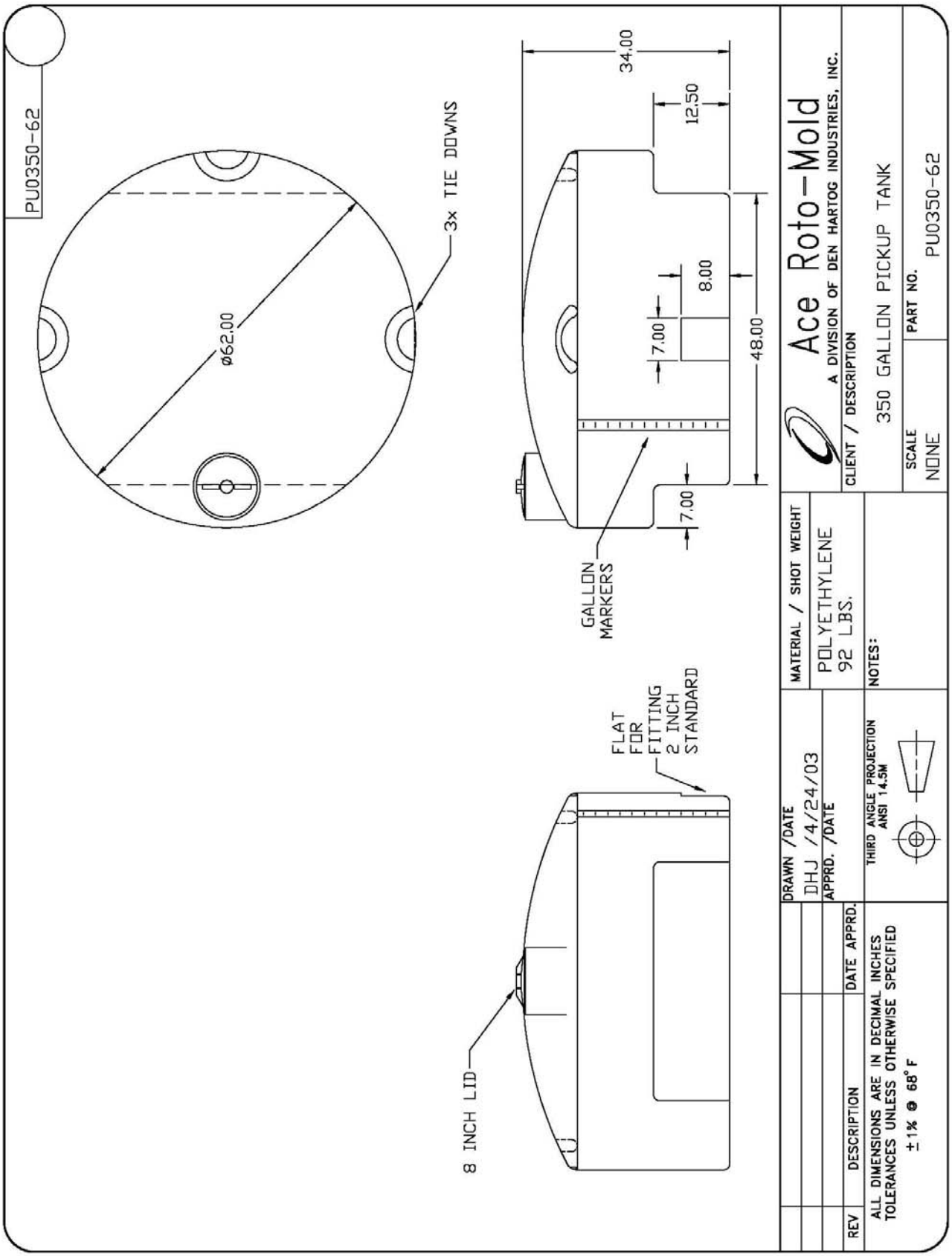
PU0350-62
ø62.00
3x TIE DOWNS
34.00
12.50
8.00
7.00
48.00
7.00
GALLON MARKERS
FLAT FOR FITTING 2 INCH STANDARD
8 INCH LID
Ace Roto-Mold
A DIVISION OF DEN HARTOG INDUSTRIES, INC.
CLIENT / DESCRIPTION
350 GALLON PICKUP TANK
SCALE
NONE
PART NO.
PU0350-62
MATERIAL / SHOT WEIGHT
POLYETHYLENE
92 LBS.
NOTES:
DRAWN /DATE
DHJ /4/24/03
APPRD. /DATE
THIRD ANGLE PROJECTION
ANSI 14.5M
REV
DESCRIPTION
DATE
APPRD.
ALL DIMENSIONS ARE IN DECIMAL INCHES
TOLERANCES UNLESS OTHERWISE SPECIFIED
±1% @ 68°F

12 VOLT PUMP SPEED CONTROLLER

Inlcudes: 12 Volt, 10 amp, 25 amp, speed control • Reverse polarity protected • 8 ft. input wire • 15 ft. output wire • On/off control switch • Speed control adjustment knob

Part #	Description	Use with	Cost
ESC10	10 amp controller only	12 volt diaphragm	**$109.49**
ESC10PKG	10 amp controller with wires & fitting	12 volt diaphragm	**$156.63**
ESC25PKG	25 amp controller wires & fitting	12 volt diaphragm	**$234.41**
ESC25	25 amp controller only	12 volt diaphragm	**$186.79**
***01535**	Run/Hold Kit	25 amp controller	**$71.29**

Must order gauges separately. Will control 12V Sunwill/Shurflo/Aquatec. Not for use with Hypro 4-roller pump.
*****Only for use with 25 amp controller. *****

SPEED CONTROL FITTINGS & PARTS

Input Wiring
10-8-IN.....8 ft. 14-2 Fused Input wire w/.93" Molex **$10.92**
25-8-IN.....8 ft. 12-2 Input wire w/Anderson (25 amp) **$13.30**
Output Wiring - for 10 Amp Controllers
10-15 .....15' Output wire, 14-2 w/.93" Molex **$10.71**
10-20 .....20' Output wire, 14-2 w/.93" Molex **$14.23**
10-30 .....30' Output wire, 14-2 w/.93" Molex **$21.36**
10-40 .....40' Output wire, 14-2 w/.93" Molex **$28.46**
Output Wiring - 25 Amp Controllers
25-15 .....15' Output wire, 12-2 w/Anderson **$18.08**
25-20 .....20' Output wire, 12-2 w/Anderson **$24.19**
25-30 .....30' Output wire, 12-2 w/Anderson **$36.27**
25-40 .....40' Output wire, 12-2 w/Anderson **$48.39**
25-Y .....Pigtail for dual pump wiring w/Anderson **$25.22**

14 AWG Wire Connectors-Fits JDS10:
ACC017 .....093 2-Pin Female Housing w/Male pins .....**$.99**
ACC018 .....093 2-Pin Male Housing w/Female pins .....**$.99**

Gauges:
SG602A .....Brass 2" (fits JDS10) **$10.10**

AA60A .....Stainless 2 1/2" (fits JDS10 / JDS25) **$23.05**

PRESSURE TUBING & FITTINGS

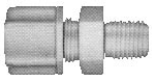
1181


1182

18TUBEPR .....1/8" OD pressure tubing.....**$.36**
1181 .....Compression fitting 1/8" mpt tubing connector **$2.81**
1182 .....Union fitting 1/8" tubing **$4.08**
214-0001-001 .....1/4" OD pressure tubing.....**$.28**
333-0001-004 .....1/8" fpt x 1/4" pressure line conn **$3.83**
333-0001-007 .....1/4" mpt x 1/4" pressure line conn **$2.52**
333-0001-008 .....1/4" pressure line union **$4.38**

REBOUNDER 2000

Shown With Y-Not Split-It Fertilizer Attachment & Hose Holder Kit

Part #	Description	Cost
RJD	Rebounder-JD-White-Kinze	**$17.57**
RY	Y-Not Split-It (Y-Not Split-It Fitting, 3/8" Tube, 2-5" Tie Straps, 2'-1/4" Hose)	**$5.05**
RST	Stainless Steel Tube For International Planters (Specify Planter)	**$12.08**

NEW!! Super Tuff Rebounder. Recommended for planters that cover 2000 acres or more a year.

ROJD	Orange Rebounder - JD - White - Kinze	**$29.94**

Please Specify What Planter Or Drill

MANIFOLD TUBING

Part #	Description	Cost
2T20-0403N-100	Tubing, 11/64 ID w/1/4" OD NATURAL	**$.18**
2T20-0403BK-100	Tubing, 11/64 ID w/1/4" OD BLACK	**$.18**
2T20-0403G-100	Tubing, 11/64 ID w/1/4" OD GREEN	**$.19**
2T20-0403Y-100	Tubing, 11/64 ID w/1/4" OD YELLOW	**$.19**
46428	3/16" x 1/4" BLUE	**$.23**
2T20-0403BK-100	Tubing, 11/64 ID w/1/4" OD BLACK	**$.32**
2T20-0604N-100	Tubing, 11/64 ID w/3/8" OD NATURAL	**$.32**

SHURflo

Shurflo Diaphragm Pumps

Model #	Volts	Max. GPM	Max Amp Draw	Type of Control	Shut Off Pressure	Switch On Pressure	Port Size	Valve Material	Diaphragm Material	12 Or More Assorted	6 Or More Assorted	Single Pump
8000-543-210	12	1.4	5.0	35 PSI internal BP	Bypass	Bypass	3/8" FPT	Viton	Santoprene	**$56.26**	**$61.47**	**$68.85**
8000-543-236	12	1.4	7.0	Demand Switch	60 PSI	45 PSI	3/8" FPT	Viton	Santoprene	**$56.69**	**$61.95**	**$69.38**
8000-643-236	12	1.8	7.0	Demand Switch	60 PSI	45 PSI	3/8" FPT	Buna	Geolast	**$75.62**	**$82.62**	**$92.54**
8000-543-250	12	1.4	5.0	45 PSI internal BP	Bypass	Bypass	3/8" FPT	Viton	Santoprene	**$56.26**	**$61.47**	**$68.85**
2088-343-135	12	3.0	5.0	Demand Switch	60 PSI	45 PSI	1/2" MPT	Viton	Santoprene	**$72.73**	**$79.47**	**$89.00**
2088-443-144	12	3.5	10.0	Demand Switch	60 PSI	45 PSI	1/2" MPT	Santo	Santoprene	**$63.12**	**$68.97**	**$77.25**
2088-514-144	12	4.0	12.0	Demand Switch	60 PSI	45 PSI	1/2" MPT	Santo	Santoprene	**$102.41**	**$111.90**	**$125.33**
8000-533-250	115-AC	1.4	0.7	45 PSI internal BP	Bypass	Bypass	3/8" FPT	Viton	Santoprene	**$77.71**	**$84.91**	**$95.10**
8000-533-236	115-AC	1.4	0.7	Demand Switch	60 PSI	45 PSI	3/8" FPT	Viton	Santoprene	**$81.61**	**$89.17**	**$99.87**
2088-394-154	115-AC	3.2	0.9	Demand Switch	40 PSI	20 PSI	1/2" MPT	Viton	Santoprene	**$100.39**	**$109.69**	**$122.85**

Shurflo Repair Parts & Kits

Ref #	Part #	Description	Pump #	Cost
5b	**94-390-05**	Valve repair kit, Viton (pressure switch)	8000 (236)	**$29.41**
5a	**94-391-05**	Valve repair kit, Viton (Bypass)	8000 (210)	**$37.50**
6	**94-395-06**	Diaphragm kit, santoprene	8000	**$13.24**
4	**94-379-00**	Upper housing, poly pro, 3/8" FPT	8000	**$13.45**
2	**94-375-05**	Switch kit, Viton (pressure switch)	8000 (236)	**$19.12**
10a	**94-231-05**	Upper housing with switch kit, Viton	2088	**$38.30**
10a	**94-231-20**	Upper housing with switch kit, Santoprene	2088	**$20.91**
10b	**94-231-30**	Upper housing with out switch kit	2088	**$9.03**
12	**94-232-00**	Valve kit, Santoprene	2088	**$12.82**
13	**94-238-04**	Diaphragm drive kit, Santoprene	2088	**$24.48**
N/S	**94-390-10**	BUNA valve assembly	8000	**$16.07**
N/S	**94-395-05**	Viton Diaphragm kit	8000	**$40.34**
3A	**94-374-05**	Check valve kit (8000) celc/viton	8000	**$7.67**

Shurflo Pump Swivel Fittings-Elbow & Straight

Part #	Description	Cost
8-071-01	1/2" fpt x 3/8" hb swivel straight	**$1.23**
8-070-01	1/2" fpt x 1/2" hb swivel straight	**$1.23**
8-156-01	1/2" fpt x 3/4" hb swivel straight	**$2.23**
8-060-01	1/2" fpt x 3/8" bh swivel 90 elbow	**$1.23**
8-034-01	1/2" fpt x 1/2" hb swivel 90 elbow	**$1.23**
8-157-01	1/2" fpt x 3/4" hb swivel 90 elbow	**$2.23**

1/2 or 3/8 hosebarb 8-071-01 8-070-01

1/2 or 3/8 hosebarb 8-060-01 8-034-01

3/4" hosebarb 8-157-01

3/4" hosebarb 8-156-01

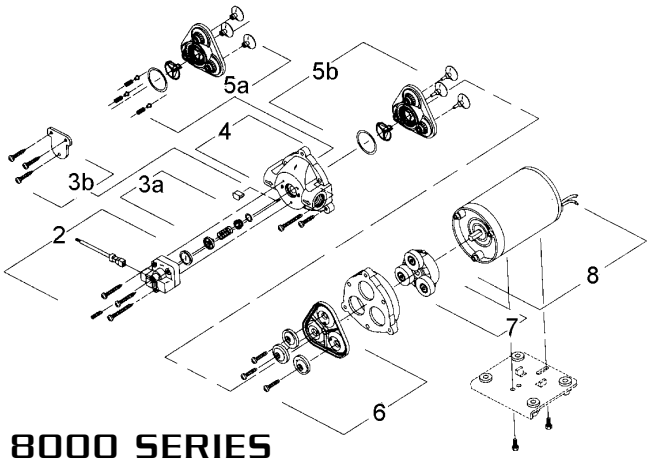

8000 SERIES

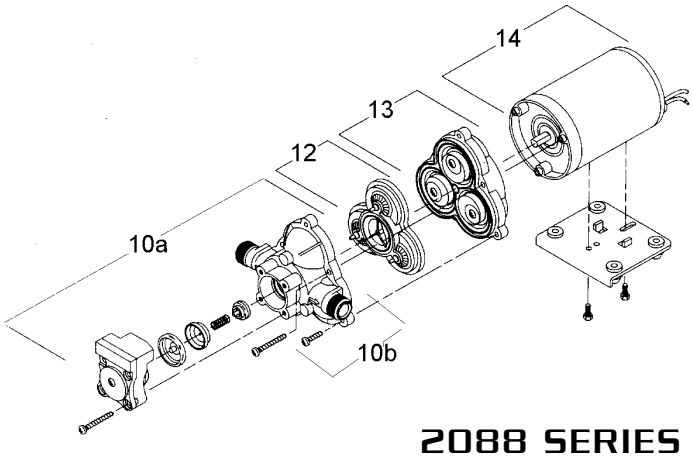

2088 SERIES

AQUATEC DDP-550 SERIES FLOWS TO 6 GPM

Discharge Pressure (PSI)	Flow (GPM)	Current (AMPS)
50	3.55	14.60
40	3.80	13.00
30	4.10	11.00
20	4.50	9.00
10	4.90	7.00
OPEN	5.30	5.50

Aquatec-5 Chamber Pump, 12 VDC Self-Priming, Viton Valves, Santoprene Diaphragms, 60 PSI Demand Switch, 1/2" FPT Inlet and Outlet

5513-1E77-M638 .....**$127.61**
Quanity of 6 .....**$115.19 each**

SHURFLO POWER TWIN FLOWS TO 7 GPM

Pressure (PSI) Inlet/Outlet		Flow (GPM)	Current (AMPS)
	0/2	6.82	9.54
	10	6.22	11.80
	20	5.64	14.46
	30	5.02	17.14
	40	4.35	18.98

Power Twin Double-Headed Pump 12 VDC with Heat Sink, Viton Valves, Santoprene Diaphragms, Splash-Proof Demand Switch, 45 PSI, 3/4" Manifold, 1/2" MPT Inlet and Outlet.

4311-035 .....**$221.72**
Quanity of 6 .....**$197.96 each**

12 & 115 VOLT ELECTRIC DIAPHRAGM PUMPS

- DEMAND SWITCH MODELS operate only when liquid flow is required. Pump and motor stop instantly when discharge is closed.
- RELIEF VALVE MODELS have pressure controlled by an internal relief valve, and run continuously unless electric current is turned off.
- Diaphragm design eliminates troublesome shaft seal.
- Pump can be run indefinitely without damage.
- Ball bearing drive - assures longer pump life.
- Excellent self-priming capability.
- Santoprene diaphragms and viton valves are standard.
- Maximum temperature of pumped liquid 110°F.
- Permanent magnet motor - long life brushes.

	Fimco Code No.	Mfg. Part No.	Volts	Amps	Demand Switch Or Relief Valve	***Max. Pressure	****Gallons Per Minute Max.	List Price
	**5275015**	FTMBOO1D-0120110	12	4.0	Demand Switch	35	1	**$55.00**
	**5275016**	FTMBOO1D-0120111	12	8.0	Demand Switch	60	2.1	**$66.50**
	**5275017**	FTMBOO1D-0120112	12	11.0	Demand Switch	45	3.8	**$95.00**

SCB1001KSS
GE Profile Advantium® Wall Oven

Advantium wall oven/GE Profile cooking tower dimensions and cabinet installation information (in inches)

Note: Cabinets installed adjacent to wall ovens must have an adhesion spec of at least a 194°F temperature rating.

Note: 2" minimum between cutouts when installed above warming drawer or single wall oven.

Installation Information: Before installing, consult installation instructions packed with product for current dimensional data.

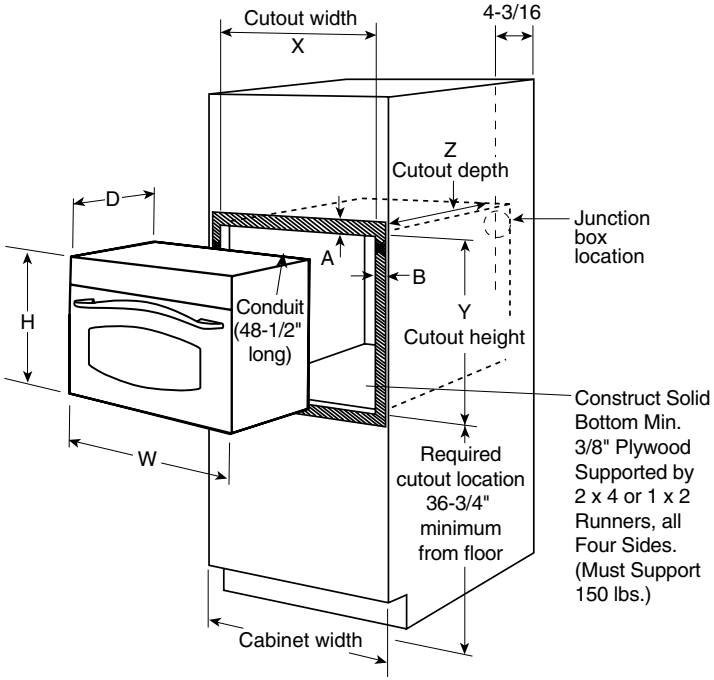

A=Allow 1" overlap of oven over top and bottom edges of cutout.
B=Allow 11/16"-3/4" for overlap of oven over side edges of cutout.

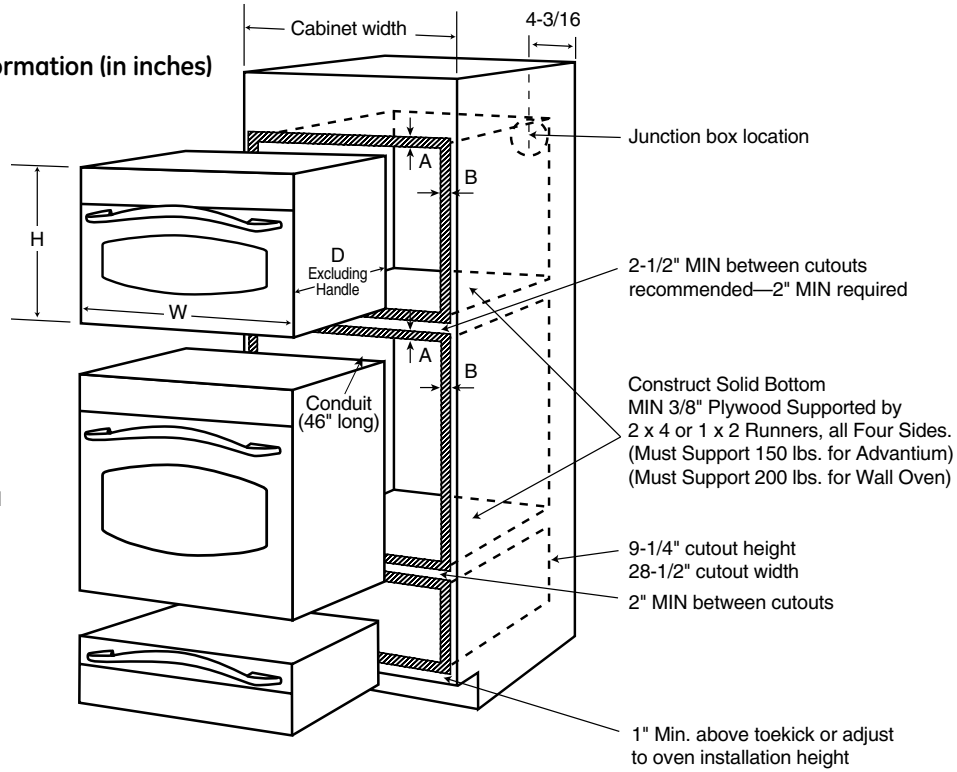

A=Allow 1" overlap of oven over top and bottom edges of cutout.
B=Allow 11/16"-3/4" for overlap of oven over side edges of cutout.

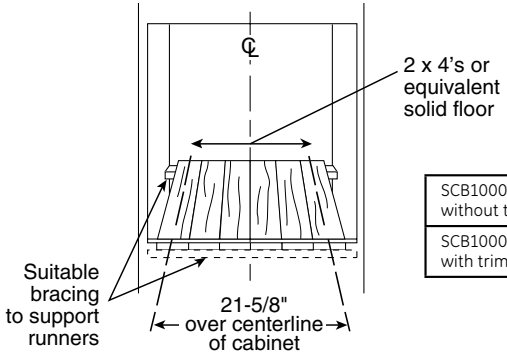

(Must Support 275 LBS.)

	Cabinet Width	W Width	H Height	D Depth (excluding handle)	X Cutout Width	Y Cutout Height	Z Cutout Depth minimum
SCB1000/1:27" Installation without trim kit	27	26-3/4	19-1/32	21-1/2	25-1/4	17-1/2	23-1/2
SCB1000/1:30" Installation with trim kit	30	29-3/4	19-1/32	21-1/2	25-1/4	17-1/2	23-1/2

For answers to your Monogram,® GE Profile™ or GE® appliance questions, visit our website at ge.com or call GE Answer Center® service, 800.626.2000.

imagination at work

Listed by Underwriters Laboratories

Specification Revised 1/07 240404

SCB1001KSS
GE Profile Advantium® Wall Oven

Features and Benefits

- Speedcook Oven - Delivers oven quality food up to four times faster than a conventional oven. No preheating required
- True European Convection Oven - 1500-watt convection oven mode bakes and roasts at temperatures ranging from 80 to 450 degrees
- Sensor Microwave Oven - 975-watt sensor microwave oven mode automatically delivers perfect cooking results
- Warming Oven - Keeps prepared foods warm and fresh, and retains perfect moistness and crispness
- Proof Feature - Specialized mode allows dough to rise quickly
- 16" Turntable - Removable metal and glass trays easily handle large casserole dishes
- Rounded Rear Wall - Allows complete turntable rotation of 9" x 13" casserole dish for even cooking
- Installation Flexibility - Fits either a 27" or a 30" wall oven cabinet (installation kit included)
- Preprogrammed Recipes - Provide quick and easy programming of over 175 speedcook food selections
- Multi-Level Cooking - Removable rack allows cooking of multiple dishes at once
- Non-Stick Cooking Tray - 16" speedcook tray cleans up easily
- Model SCB1001KSS - Stainless steel

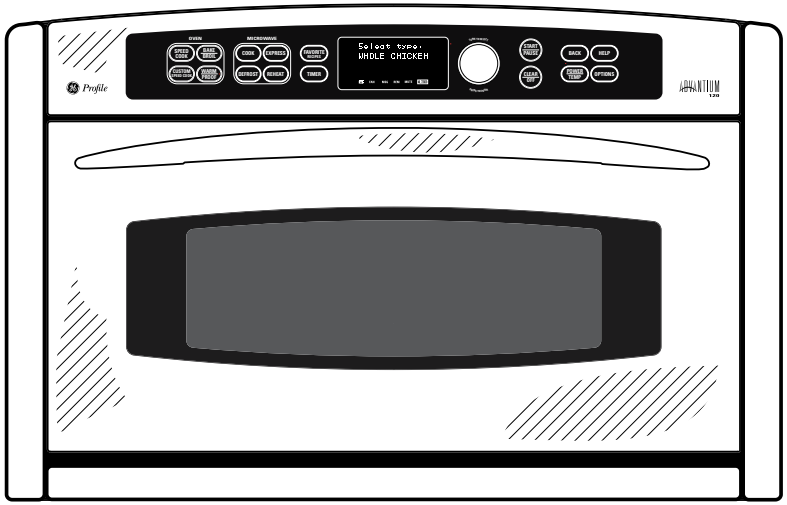

imagination at work

Integrated Induction Cooktop

MODEL CT15I/S

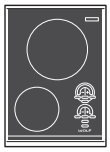

Model CT15I/S
Classic Stainless Steel

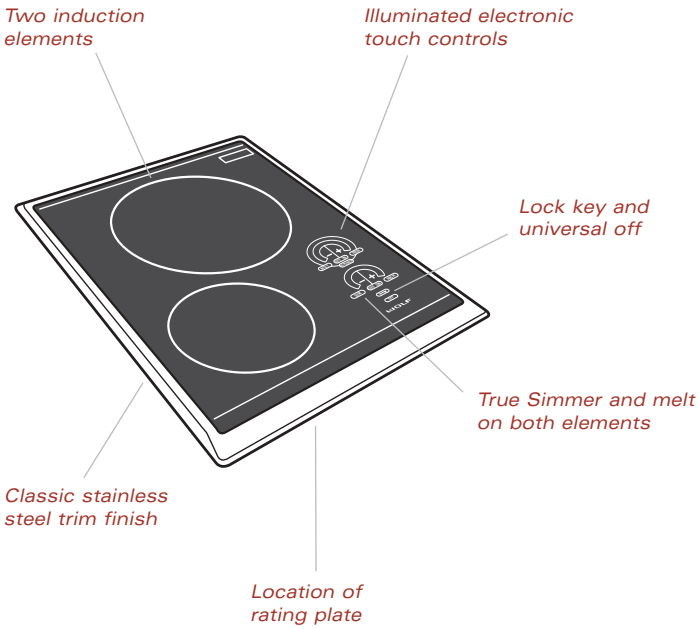

► *The Wolf Model CT15I/S 15" (381) integrated induction cooktop is available with classic stainless steel trim finish.*

While induction cooking is new to North America, it has been used in Europe for decades by professionals and homeowners demanding the best in performance.

Cooking with this sleek 15-inch powerhouse is simply the best way to cook. Electricity flows through a coil to produce a magnetic field under the sleek black ceramic top. When an iron or magnetic stainless steel pan is placed on the surface, the magnetic field creates a current in the pan, exciting the molecules and heating the pan and not the cooktop. That's why the cooktop stays cool to the touch and the food cooks efficiently.

In fact this unit is so efficient that it outperforms gas and electric cooktops. There is no wasted heat because energy is supplied directly to the cooking vessel so nearly 90 percent of the energy gets used to cook.

You can keep sauces and chocolates melted at 50 watts of power, or with the touch of a finger, activate the Hi-Power boost feature and boil water in half the time you normally do.

The Wolf induction cooktop has it all.

Dimensions in parentheses are in millimeters unless otherwise specified.

Integrated Induction Cooktop

MODEL CT15I/S

FEATURES

- Integrated design allows for installation of multiple cooktops or modules
- Classic stainless steel trim finish
- Easy-to-clean black ceramic glass surface is resistant to scratching, staining, impact and heat
- Induction elements heat cookware, not the glass, for a cooler, safer cooking surface
- Cookware sensing—elements will not be energized without an iron or magnetic stainless steel pan on the cooktop surface
- Illuminated electronic touch controls with graduated control lighting
- High-efficiency elements deliver power and control
- Hi-Power mode boosts power on rear element to 2200 W maximum power output by diverting power from front element
- Simultaneous operation of both elements at 1800 W power output each
- True Simmer setting on both elements
- Melt setting on both elements
- Temperature limiter to ensure that safe operating temperature of ceramic glass is never exceeded
- Child safety lock key and universal off
- CSA certified for US and Canada
- Two and five year residential warranty – exclusions apply; warranty information can be found on our website, wolfappliance.com

OVERALL DIMENSIONS ▼

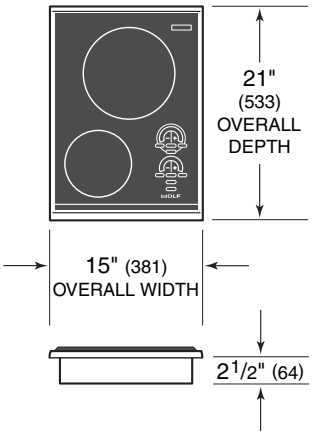

Dimensions may vary by ± 1/8" (3).

Dimensions in parentheses are in millimeters unless otherwise specified.

Integrated Induction Cooktop

MODEL CT15I/S

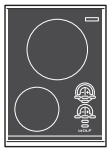

Model CT15I/S
Classic Stainless Steel

MODEL OPTION

Classic Stainless Trim	CT15I/S

VENTILATION OPTIONS

- 30" (762) Cooktop or Pro wall hood or liner
- 30" (762) or 45" (1143) downdraft ventilation system
- 36" (914) Cooktop or Pro island hood

For additional information, refer to the Wolf Cooktop Ventilation or Pro Ventilation sections of our website, wolfappliance.com.

ACCESSORIES

- Filler strip
- Bracket supports for installation of two integrated modules with downdraft (Model DD30 only)

Accessories are available through your Wolf dealer. To obtain local dealer information, visit the Locator section of our website, wolfappliance.com.

SPECIFICATIONS

Overall Cooktop Width	15" (381)
Overall Cooktop Height	2 1/2" (64)
Overall Cooktop Depth	21" (533)
Cooktop Cut-Out Width	13 3/8" (340)
Cooktop Cut-Out Depth	19 1/4" (489)
Minimum Cabinet Depth	22 3/4" (578)
Minimum Height Clearance	6" (152)
Element Maximum Power	(front) 1800 W (rear) 2200 W
Electrical Supply Requirements	240/208 V AC, 60 Hz 20 amp dedicated circuit
Conduit	4 ft (1.2 m) flexible 3-wire
Electrical Rating	3.4 kW at 240 V 2.6 kW at 208 V
Shipping Weight	30 lbs (14 kg)
Special Note	Cooktop can be installed in combination with other cooktops or modules

Specifications are subject to change without notice.

Dimensions in parentheses are in millimeters unless otherwise specified.

Integrated Induction Cooktop

MODEL CT15I/S

INSTALLATION SPECIFICATIONS

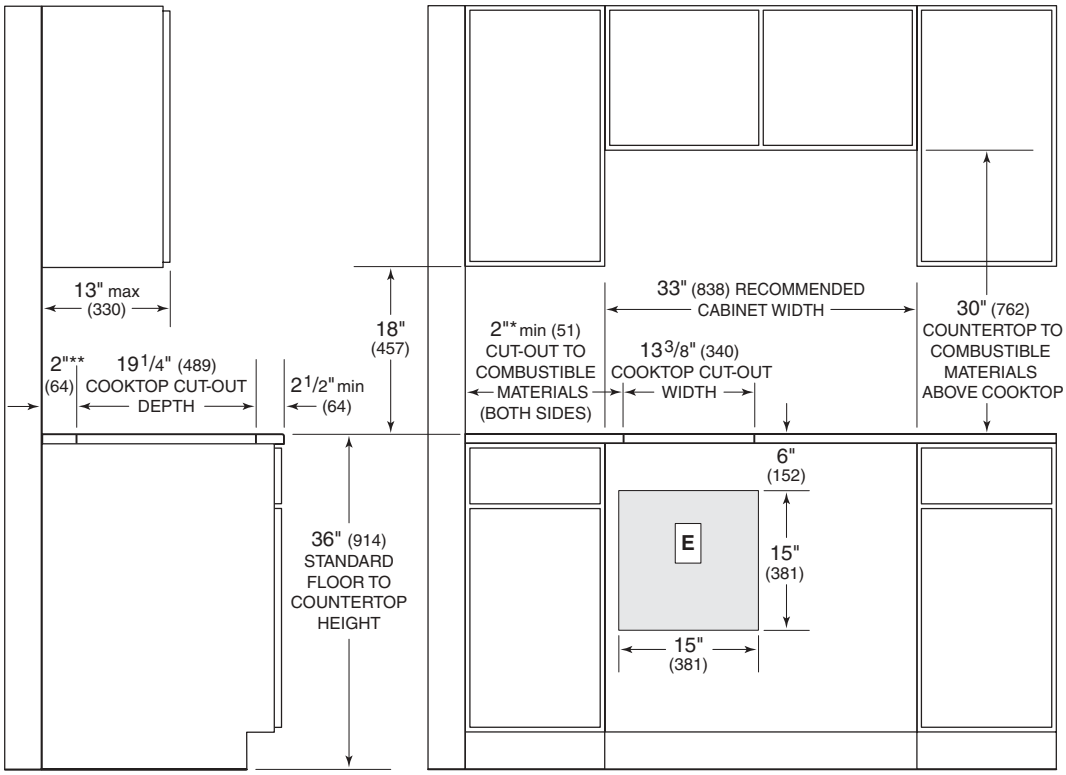

*NOTE: Application shown allows for installation of two 15" (381) modules side-by-side with 33" (838) recommended cabinet width. 18" (457) recommended cabinet width for installation of single 15" (381) cooktop or module. *Minimum clearance from both side edges of cooktop cut-out to combustible materials up to 18" (457) above countertop. **Minimum clearance from rear edge of cooktop cut-out to combustible materials up to 18" (457) above countertop.*

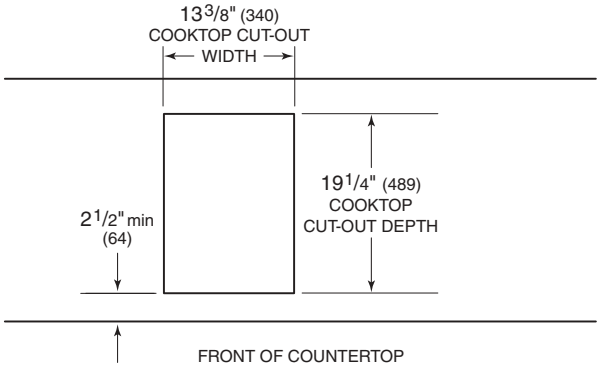

DIMENSIONS

Cooktop Cut-Out Width	13 3/8" (340)
Cooktop Cut-Out Depth	19 1/4" (489)
Minimum Height Clearance	6" (152)
Minimum Cabinet Depth	22 3/4" (578)
Location of Electrical	Within shaded area

See Installation Instructions shipped with unit for detailed specifications.

Dimensions in parentheses are in millimeters unless otherwise specified.

Integrated Induction Cooktop

MODEL CT15I/S

INSTALLATION NOTES

► Refer to the illustrations and specifications for overall dimensions, cut-out dimensions and installation specifics.

► Wolf recommends using 33" (838) wide cabinets for installation of two 15" (381) modules side by side. An 18" (457) wide cabinet is recommended for installation of a single 15" (381) cooktop or module.

IMPORTANT NOTE: Review specific installation instructions for product to product capabilities

► If the 15" (381) integrated induction cooktop is to be used with any combination of additional cooktop units or modules with a filler strip, the cut-out width increases to 14" (356). When multiple cooktops or modules are installed side by side, refer to the countertop cut-out dimensions on page 6.

IMPORTANT NOTE: A minimum height clearance of 6" (152) is required. If a shelf is installed below the unit, a 1" (25) gap at the rear of the cabinet shelf is necessary to allow for proper ventilation. Failure to do so could result in decreased performance or product damage.

► A Wolf downdraft system, Cooktop or Pro ventilation hood is recommended. When installing a ventilation hood, refer to the specific requirements of the hood for the minimum dimension to countertop. Also refer to Ventilation Recommendations in the Cooktop Ventilation or Pro Ventilation sections of our website, wolfappliance.com.

► The Wolf 15" (381) integrated induction cooktop requires a separate, grounded 3-wire 240/208 V AC, 60 Hz, 20 amp service with its own circuit breaker. It has a 4' (1.2 m) flexible 3-wire conduit for connection at the electrical supply. Locate electrical within the shaded area shown in the Installation illustration on page 4.

► You must follow all National Electrical Code regulations. In addition, be aware of local codes and ordinances when installing your service.

► Refer to the installation instructions shipped with each Wolf product for detailed specifications.

⚠ WARNING

This cooktop is intended for indoor use only.

Integrated Induction Cooktop

MODEL CT15I/S

INTEGRATED MODULES— MULTIPLE UNIT INSTALLATION

With Wolf's integrated modules, you have the ultimate in customization. You can create your own design by mixing and matching the various components within this system. And when you couple these modules with other cooktops within the Wolf inventory you and your client will truly understand freedom of choice.

Some Wolf integrated modules can be installed together or with a 30" (762) or 36" (914) cooktop. When multiple units are installed side by side, the cut-out dimensions that are shown in the illustration are derived by adding 1 1/4" (32) additional space for each additional unit, to give you your total cut-out width. Refer to the illustration below for countertop cut-out dimensions for installation of multiple cooktops.

IMPORTANT NOTE: Refer to the pages for each specific integrated module for installation limitations.

IMPORTANT NOTE: Where multiple cooktops and/or modules are installed side by side, each unit must have its own separate recommended electrical circuit. When multiple gas cooktops and/or modules are installed next to one another, they can receive their gas supply from a common line. However, each unit **must** have its own regulator installed between the mainline and the cooktop or module.

When two or more cooktops or modules are installed together, an integrated module filler strip is recommended. Contact your Wolf dealer for information on this accessory component.

For electrical requirements, additional specifications and installation limitations, refer to the Installation Notes on page 5.

IMPORTANT NOTE: Review specific installation instructions for product to product capabilities.

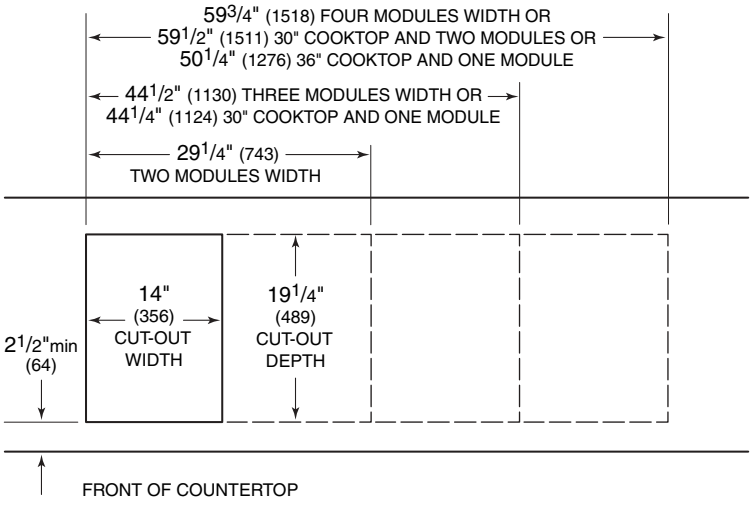

Countertop cut-out dimensions for installation of multiple cooktop units.

Dimensions in parentheses are in millimeters unless otherwise specified.

PDW9900/9980N

GE Profile™ Dishwasher with SmartDispense™ Technology

Dimensions and Installation Information (in inches)

Electrical Rating

Voltage AC	120
Hertz	60
Total connected load amperage	9.1
Calrod® heater watts max	875

For use on adequately wired 120-volt, 15-amp circuit having 2-wire service with a separate ground wire. This appliance must be grounded for safe operation.

Installation Information: Before installing, consult installation instructions packed with product for current dimensional data.

†† Add 1/2" for deepest part of contour door. Allow an additional 2" for the handle on PDW9900/9200 Series models.

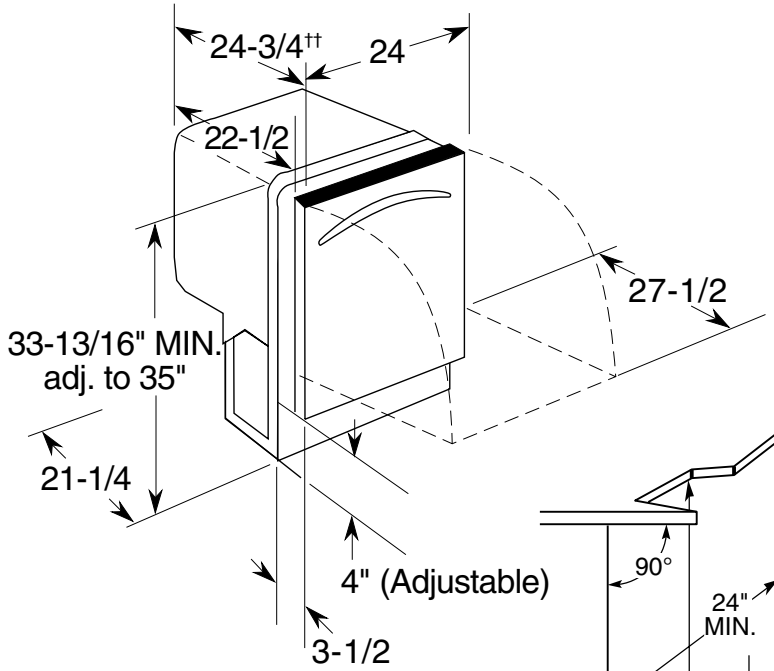

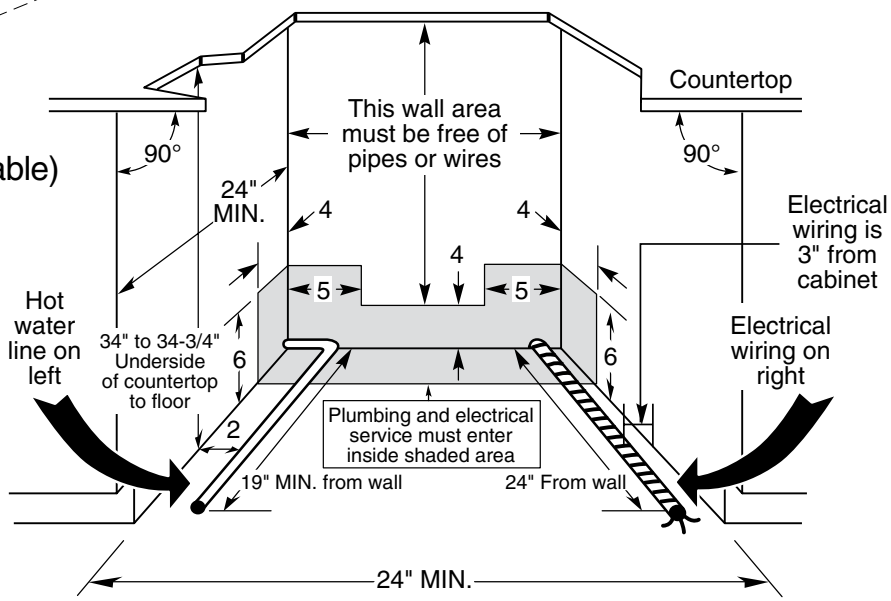

For answers to your Monogram,® GE Profile™ or GE® appliance questions, visit our website at ge.com or call GE Answer Center® service, 800.626.2000.

imagination at work

NSF

UL Listed by Underwriters Laboratories

ENERGY STAR — As an ENERGY STAR® partner, GE has determined that this product meets the ENERGY STAR guidelines for energy efficiency.

Specification Created 6/06 250215

PDW9900/9980N

GE Profile™ Dishwasher with SmartDispense™ Technology

Features and Benefits

- SmartDispense™ Technology - Holds an entire bottle of liquid automatic dishwasher detergent, dispensing the right amount based on water hardness and soil levels to get dishes incredibly clean
- Angled Rack Dry™ System - Features tines that gently angle cups, mugs and dessert glasses so water runs right off
- Single Rack Wash™ Selection - Perfect for smaller loads or for cleaning glasses only, washing just the upper rack of dishes using less water and energy
- QuietPower™ 7 Sound Package - Our quietest dishwasher ever with extremely quiet components and a hidden vent that seals in sound during the wash cycle
- Countdown Display with 1-24 Hour Delay Start - Signals remaining cycle time and starts the dishwasher when no one's home or during off peak hours when utilities are at reduced rates
- 100% Fold-Down Tines and Adaptable Bowl Tines in Lower Rack - Flip up to hold bowls, or flip down to provide maximum loading flexibility in the lower rack
- SpeedCycle™ Selection - Cuts the length of the normal cycle in half, effectively washing and drying lightly soiled dishes in about 45 minutes or less
- Model PDW9980NSS - Stainless steel (shown)
- Model PDW9900NWW - White on white
- Model PDW9900NBB - Black on black

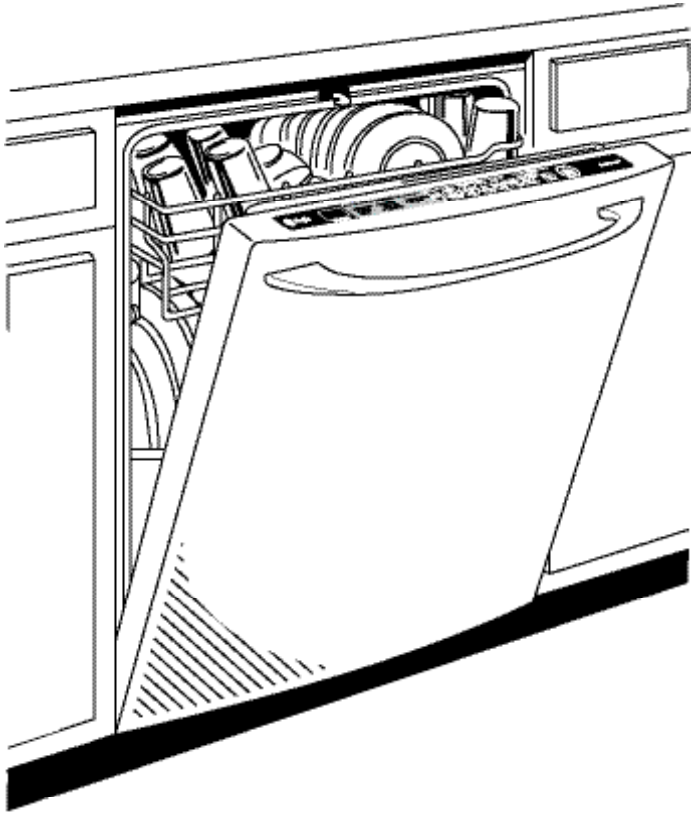

imagination at work

Profile™

JVB94SH – GE Profile™ 30" Telescopic Downdraft System

Overall Dimensions (in inches)

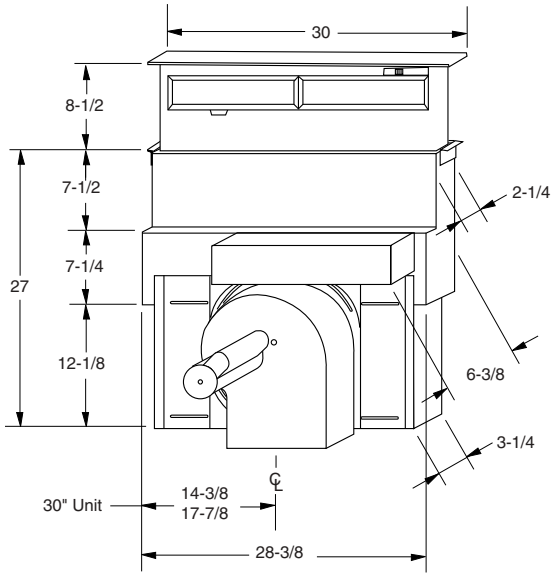

Venting Options (in inches)

Through the Floor

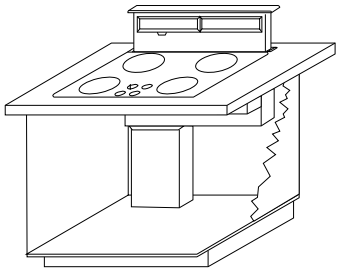

In Cabinet Discharge (Down)

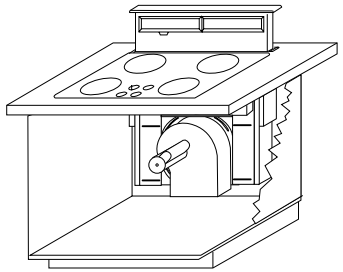

In Cabinet Discharge (Right)

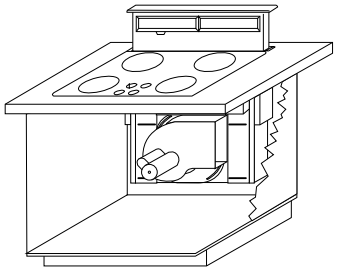

In Cabinet Discharge (Left)

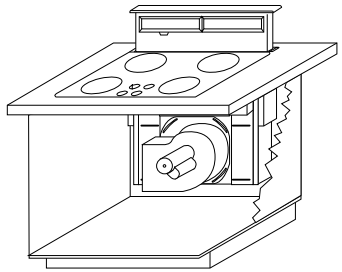

Note: Telescopic downdraft vents are not recommended to be installed with cooktops that are flush mounted.

Approved for use with the following GE Profile™ and GE cooktops – 36" and 30" electric models, 36" and 30" gas sealed burner models and 36" and 30" induction models.
Not approved for use with standard burner gas cooktops.

Note: The countertop must be at least 26" deep with a flat surface area of 23-1/2" or more, front to back. In addition, other clearances to the front edge of the countertop must be considered.

Note: Dimensions shown are for reference only. Before cutting out countertop, refer to instructions packed with **downdraft and cooktop.**

Note: Installation in cabinets/countertops against the wall will not be possible in most applications. Against the wall installations are limited to dimension requirements. Refer to installation instructions packed with product for further details.

JXBC67 Outdoor Cover. Optional accessory may be ordered for installation of motor and blower assembly on outside wall.

JXRB67 Indoor Remote Accessory. Optional accessory may be ordered for installation of motor and blower assembly in an indoor remote location.

Installation Information: Before installing, consult installation instructions packed with product for current dimensional data.

Installation Information: Before installing, consult installation instructions packed with product for current dimensional data.

Listed by Underwriters Laboratories

For answers to your Monogram,® GE Profile™ or GE® appliance questions, visit our website at GEAppliances.com or call GE Answer Center® service, 800.626.2000.

Specification Created 7/03
220963

Profile™

JVB94SH – GE Profile™ 30" Telescopic Downdraft System

Venting Duct Information

Duct Pieces	Equivalent Length*	Duct Pieces	Equivalent Length*
6" Round Straight	1 ft. (per foot length)	3-1/4" x 10" to 6" Round Transition	5 ft.
3-1/4" x 10" Straight	1 ft. (per foot length)	6" Round to 3-1/4 x 10" Transitions 90° Elbow	20 ft.
6" 90° Elbow	15 ft.	3-1/4" x 10" to 6" Round Transition 90° Elbow	12 ft.
6" 45° Elbow	9 ft.	6" Round Wall Cap with Damper	21 ft.
3-1/4" x 10" 90° Elbow	16 ft.	3-1/4" x 10" Wall Cap with Damper	27 ft.
3-1/4" x 10" 45° Elbow	5 ft.	6" Round Roof Cap	20 ft.
3-1/4" x 10" 45° Elbow	24 ft.	6" Round Roof Vent	24 ft.
6" Round to 3-1/4 x 10" Transitions	7 ft.	**SHOULD NOT EXCEED 100 EQUIVALENT FT.** *Equivalent length of duct pieces are based on actual test conducted by GE Evaluation Engineering and reflect requirements for good venting performance with a downdraft rated at 500 CFM	

Plan the Ductwork

1. This downdraft blower system is designed for use with 3-1/4" x 10" ductwork (can be transitioned to 6" round). Two different discharge directions are available with side-to-side adjustment for the accurate alignment of ductwork.
2. For best performance: choose the ducting option which allows the shortest length of ductwork and a minimum number of elbows and transitions. Check location of floor joists, wall joists, wall studs, electrical wiring or plumbing for possible interference.

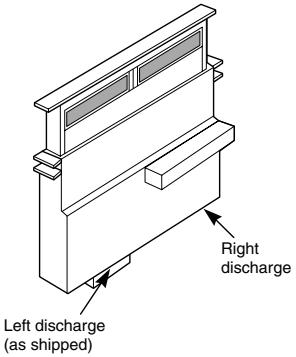

Steps to Determine Flexible Ducting's Equivalent Length

1. Measure the actual amount of offset (Maximum 3" recommended). The effect upon airflow is dependent upon the amount of offset.
2. Calculate the equivalent ducting allowances using:
   (__in. offset) x (14 Ft. per inch)
   =__Ft. equivalent length.
1. Ensure that the total equivalent length of ducting does not exceed the maximum recommendation of 150 feet.

Listed by Underwriters Laboratories

For answers to your Monogram,® GE Profile™ or GE® appliance questions, visit our website at GEAppliances.com or call GE Answer Center® service, 800.626.2000.

Specification Created 7/03
220963

Profile™

JVB94SH – GE Profile™ 30" Telescopic Downdraft System

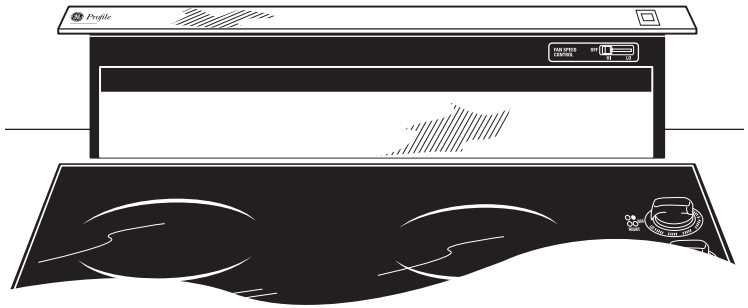

Features and Benefits

- Telescopic downdraft hood – Hood raises over cooktop surface and retracts when not in use.
- 500 CFM – Powerful 500 CFM performance removes smoke and vapors from the cooking area.
- Variable speed fan control – The powerful variable speed exhaust system effectively pulls smoke and vapors out of the kitchen.
- Removable grease filter – Durable filters can be removed for easy cleaning and maintenance.
- Model JVB94SHSS – Stainless steel

GDS20SBS

GE® ENERGY STAR® 19.5 Cu. Ft. Stainless Bottom-Freezer Door Refrigerator

Dimensions and Installation Information (in inches)

Overall Dimensions	Height to top of hinge (in.) **A**	**68**
	Height to top of case (in.) **B**	**67-1/4**
	Case depth without door (in.) **C**	**28-1/4**
	Case depth less door handle (in.) **D**	**31-3/4**
	Case depth with door handle (in.) **E**	**33-7/8**
	Depth with fresh food door open 90° (in.) **F**	**59**
	Width (in.) **G**	**29-7/8**
	Width with door open 90° inc. door handle (in.) **H**	**33-1/2**
Air Clearances	Each side (in.)	**1/8**
	Top (in.)	**1**
	Back (in.)	**1**

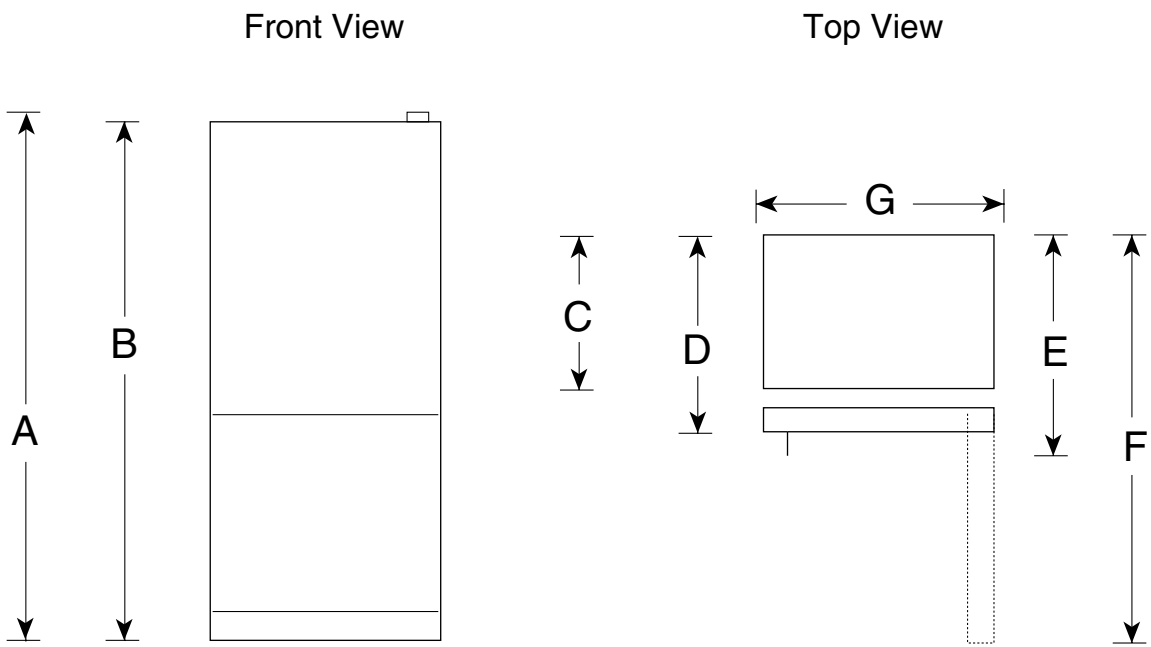

For answers to your Monogram,® GE Profile™ or GE® appliance questions, visit our website at ge.com or call GE Answer Center® service, 800.626.2000.

imagination at work

Listed by Underwriters Laboratories

As an ENERGY STAR® partner, GE has determined that this product meets the ENERGY STAR guidelines for energy efficiency.

Specification Created 1/05 310647

GDS20SBS

GE® ENERGY STAR® 19.5 Cu. Ft. Stainless Bottom-Freezer Door Refrigerator

Features and Benefits

- Stainless Finish - Conveys the look of utmost polish and sophistication
- Upfront Illuminated Temperature Controls - Is easy to see and set
- Slide 'n Store™ Freezer Basket - Offers easy access and flexible storage
- BrightSpace™ Interior with GE Reveal™ Lighting - Cast a clear natural-looking glow throughout the refrigerator
- Adjustable Spill Proof Glass Shelves - Helps to contain spills for ease of cleaning
- Adjustable Humidity Vegetable/Fruit Crisper - Provides the ideal storage environment for fruits and vegetables
- Adjustable Gallon Door Bins - Make room for milk and other gallon-size containers
- Snack Pan - Helps keep everyday foods like muffins and carrot sticks fresh
- NeverClean™ Condenser - Condenser coils are encased, so they don't require cleaning in normal operating environments
- Deluxe Quiet Design - Significantly reduces operating noise
- Model GDS20SBSSS - Stainless steel

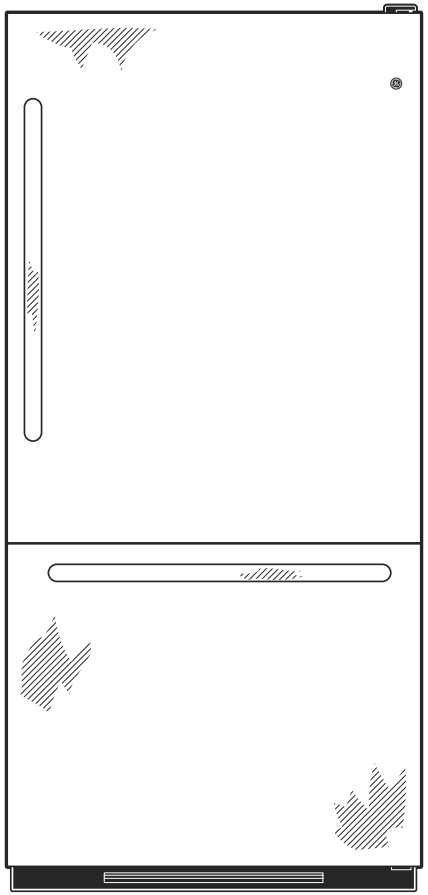

As an ENERGY STAR® partner, GE has determined that this product meets the ENERGY STAR guidelines for energy efficiency.

imagination at work

OWNER'S MANUAL

Model WCAM 1812 Combination Washer/Dryer

Contents

Important! To get the best performance from your washer/dryer, read all operating instructions before using for the first time.

ASKO

CUSTOMER CARE CENTER
800.898.1879
www.askousa.com

TECHNICAL DATA

WHAT IS A COMBINATION WASHER AND DRYER PRODUCT?

The ASKO combination washer and dryer product is a "unique laundry solution" for households that can not accommodate traditional laundry products. The large capacity tub provides an impressive 15 lb (Full Load) wash capacity or 7.5 lb (Half Load) drying capacity. This laundry solution provides the customer with the convenience of a 120V in-house laundry product that is designed to wash and dry smaller loads of laundry on a regular basis.

Our washer and dryer combination product utilizes a condenser dryer technology (vent-less) allowing for seamless wash to dry performance without the need for special electrical requirements or an external vent. These features make this product convenient for multiple applications where traditional laundry solutions (separate washer and dryer requiring 220V electrical) will not operate. This product features a large 2.5 cubic foot drum (largest in its class) which features more capacity for wash AND dry performance. Keep in mind it uses a standard household current which limits the wattage available for the dry performance, which results in longer total cycle times (3-4 hours). The 1200 RPM spin provides the maximum moisture removal to reduce the drying times along with the Heavy Stain cycles that provides a 140 degree temperature boost for improved stain removal.

Dimensions

A. Width: 23 ½" (597 mm)

B. Height: 33 ¼"- 34" (845 - 864 mm)

C. Depth: 23 5/8" (600 mm)

D. Depth w/door open: 39" (991 mm)

Capacity

Large

Electrical Conn.

Voltage: 120 Volts, 15 Amp, 60Hz

Water Conn.

Inlet supply hose: Two 6' (1.5 m) fill hoses, hot & cold

Supply pressure: 15 – 142 PSI

Outlet hose" 6.5' (1.7 m) polypropylene hose, ¾" ID

Note: The manufacturer reserves the right to improve appliance specifications without prior notice. For more information, see the type plate on inner door facing of machine.

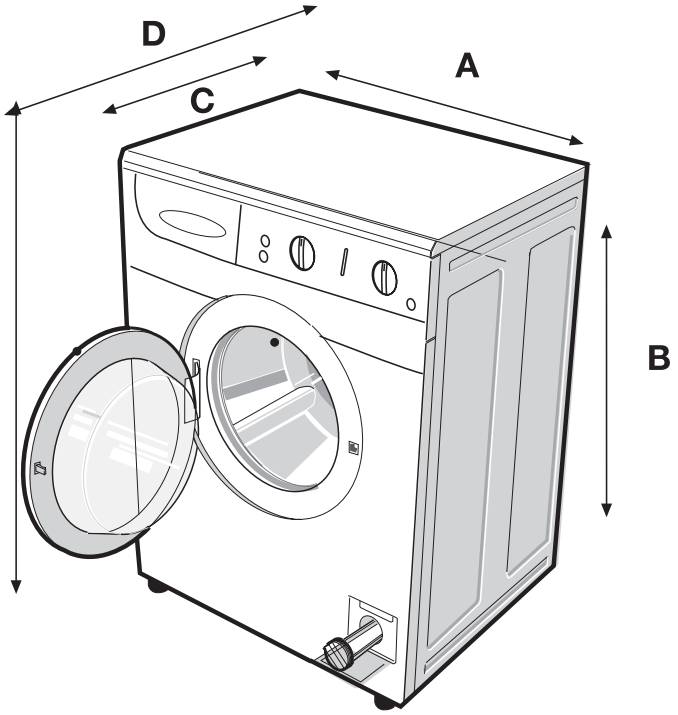

INSTALLATION REQUIREMENTS

Grounding Instructions

This appliance must be properly grounded. In the event of breakdown or malfunction, grounding reduces the risk of electric shock by providing a path of least resistance for electric current. The cord for this appliance has an equipment-grounding conductor and a grounding plug. The plug must be plugged into an outlet that is properly installed and grounded in accordance with all local codes and ordinances. Do not modify the electrical plug provided with the appliance – if it does not fit the electrical outlet, have a qualified electrician install a proper outlet. Make sure the power supply and electrical outlet support a 110/120V, 15 amp single-phase circuit.

Warning!

Improper connection of the equipment-grounding conductor may result in electric shock. If you are in doubt as to whether the appliance is properly grounded, check with a qualified electrician or service representative.

Important!

To prevent accidents, injury and fire, read instructions carefully before you install the machine.

A qualified installer familiar with all local codes and ordinances for plumbing and electricity should do the installation and grounding. Incorrect installation may cause damage or injury.

Install washer/dryer on a strong, level floor in a protected, dry and well-ventilated area with room for electrical cords and hoses behind the machine. Temperature should be not less than 38° F (3° C)

Make sure power supply and outlet support a 110/120 V, 15 amp single-phase circuit.

Do not use an extension cord.

If integrity of the machine is in doubt, do not use it. Call Customer Care Center at 800-898-1879.

Electrical

Machine Voltage/Amperage – 120V, 60Hz, 15 Amp

Connection – 3-prong plug (must be grounded)

Circuit/Protector – single phase, 15 AMP, 120V, 60Hz

Location

The washer/dryer can be installed as a freestanding unit or in a recessed area, under a counter or in a closet with appropriate clearance. See page 4.

FILL/DRAIN HOSES

Fill Hoses – Two hoses are supplied with the machine. The hot water hose has a red stripe running the length of the hose.

Drain Hose – Drain outlet should be between 23” (60 cm) and 35” (90 cm) above the floor. To prevent siphoning, do not seal the drain hose connection into the drain outlet. If machine is not connected to a drain outlet, position drain hose and bracket over the edge of sink or wash basin and secure in place before draining. See page 5 for complete installation instructions for the fill and drain hoses.

ASKO denies all liability if installation use and care instructions are not followed completely.

Tools

1. Adjustable Wrenches (if you use adjustable fittings)

2 Open-ended Wrench [10mm]

3. Tape Measure

4. Spirit Level

5. Channel Lock

6. 20 Torx screwdriver

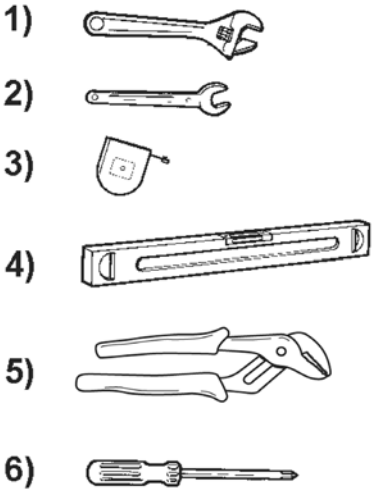

Installation/Removal

1. Unpack Washer/Dryer

Move the machine to its installation position. Remove the packing materials carefully to avoid damage to the machine's pre installed drain hose and power cord. Make sure the machine is intact and report any damage to the retail location you purchased your product from immediately.

WARNING: Destroy the carton and plastic bags after unpacking washer-dryer. Plastic bags and other packing material are not children's toys and can be dangerous.

Built-In Installation

The ASKO WCAM 1812 can be installed beneath a cabinet or worktop with a height of 34-1/2" (876 mm). There must be a gap of about 1/2" (12 mm) all around the machine, including between the rear edge of the machine top panel and the back wall. The opening width must be at least 24-1/2" (622 mm). Space must also be available for the inlet and drain hoses. See the diagram above for measurements and positions.

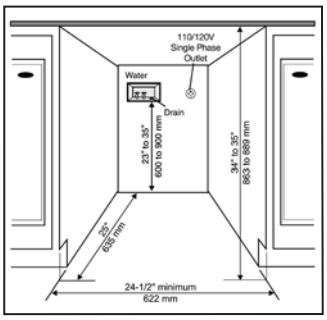

2. Remove Shipping Bolts/Spacers/Grommets

The machines shipping security consists of shipping bolts (4), spacers and grommets on the back panel to secure the wash / dry drum during shipping and delivery.

IMPORTANT: Remove all shipping bolts/spacers/ grommets before using the washer/dryer to allow proper operation and prevent damage to the appliance.

Once the machine is in its installation location, remove the four locking 10mm bolts and plastic spacers (Fig.1A). If plastic spacers cannot be removed, open rear panel (20 torx) screwdriver as shown in Fig 1B, remove spacers and replace the panel.

Keep bolts, shipping bolts, spacers and grommets for future use.

Plug holes with four plastic plugs enclosed packed with manual (Fig. 2)

Remove power cord restraints before plugging in machine.

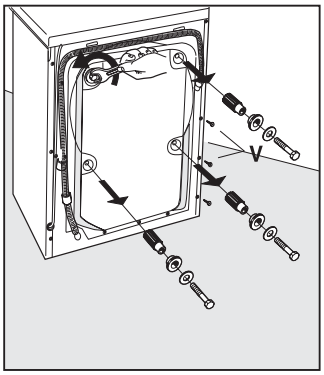

Fig. 1A

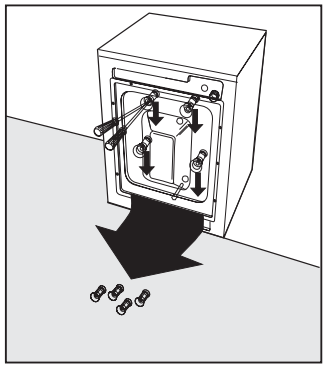

Fig. 1B

IMPORTANT: Retain all shipping bolts, spacers and grommets Reinstall to prevent damage if you transport machine in the future.

Fig. 2

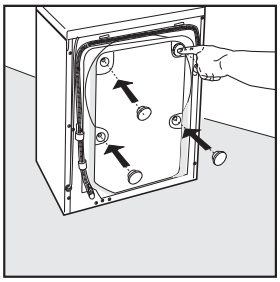

* Do not plug in power supply until shipping bolts are removed.

3. Connect Water Inlet

If connecting to new or unused water pipes, run water until clear before connecting to machine to remove any debris that could clog the water valve screens. **NOTE: Make sure water supply shut-off valves are easily accessible.**

IMPORTANT: Water pressure MUST be within the range of values indicated in Specifications.

Two inlet hoses are provided with the machine. Hot water hose has red stripe running the length of the hose. Insert washer/filter (Fig. 5A) before connecting water inlet hose to valve. Check that other end of the hose is tight

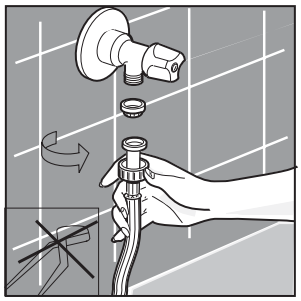

Connect to faucet (Fig. 5A). (Fig. 5B).

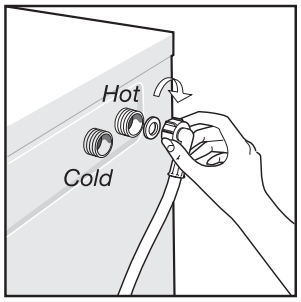

Connect to machine

NOTE: connect fill hoses, plastic end to machine AND metal end to water faucet.

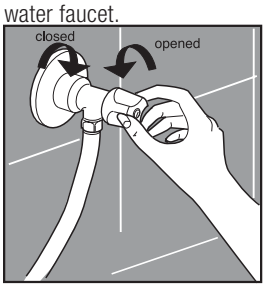

IMPORTANT: Do not over-tighten. Excessive force can damage the couplings. Tighten by hand; use a tool only in case of a leak.

Turn on water supply (Fig 5C).

Flush out water lines before connecting the hoses to machine.

4. Water Drainage

Water may be drained into a sink, drainpipe or standpipe. To prevent siphoning, do not seal drain hose into drain outlet.

Wall or Floor Standpipe Drain System - The top of the standpipe must be between 23” (60 cm) - 35” (90 cm) from the bottom of the washer.

You should securely attach drain hose to keep water pressure from allowing hose to come loose and leak on the floor.

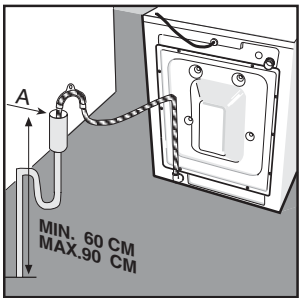

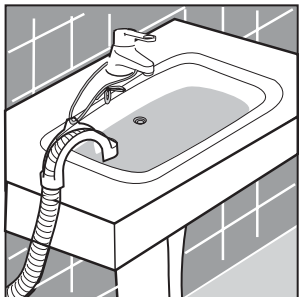

5. Level Washer/Dryer

The front and rear legs may be screwed /unscrewed to level the machine. To access legs, tilt machine backwards until it rests against wall or other stable structure. Adjust legs up or down until washer is stable and does not rock front-to-back or side-to-side when upright. Once machine is level, tighten locknuts.

IMPORTANT: For best performance, washer/dryer must rest solidly on a sturdy floor or platform, with minimum vibration.

6. Connect to electric power

Plug power cord into grounded outlet only (see Grounding Instructions on page 3 for complete details). Be sure power is OFF at fuse box/ circuit breaker before plugging in machine for the first time. Plug cord into outlet and turn power on at circuit breaker.

NOTE: Remove four (4) shipping bolts prior to plugging machine into electrical outlet. Do not cut power supply cord!

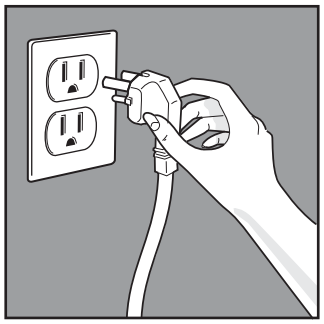

7. Turn on water supply.

Check for leaks at water faucet and machine before proceeding. Be sure the water taps are on before starting.

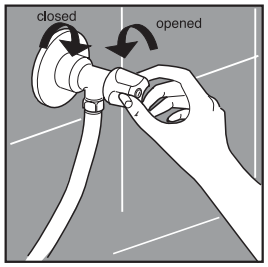

8. Prepare Washer/ Dryer for Use

Before using washer/dryer, read owner’s manual thoroughly. Save all instructions for future reference.

Wipe inside and outside of washer/dryer with a damp cloth before running to remove any dust or debris.

Run your empty washer/dryer through a complete wash cycle before washing clothes. Check for water leaks and proper operation during this test run.

ASKO denies all liability if instructions are not followed correctly.

INTRODUCTION

Thank you for choosing ASKO!

Your new ASKO washer/dryer uses less energy and space while providing outstanding washing and drying performance. The ingenious combination of style and technology will give you years of safe, reliable service.

Read Instructions Carefully

This manual includes instructions for installation, use and care of your new ASKO washer/dryer combination. Take a few minutes to read through these instructions – learning to properly use your machine can save you time and money. The enclosed Quick Start Guide should be kept near your machine for easy, convenient reference.

If you have questions or need assistance, call our Customer Care Center at 800-898-1879.

Record Model and Serial Numbers

For future reference, write down your model number and serial number, found inside the door of your machine.

Model _____

Serial _____

Date of Purchase _____

Important Safety Information

ASKO complied with the highest international safety regulations when designing and manufacturing your washer/dryer. For your safety, however, please carefully follow all precautions within this manual in order to minimize any risk of fire, electric shock, property damage, personal injury or loss of life

- Read all instructions before using this appliance.
- Do not run washer/dryer while you are not at home.
- Do not wash or dry articles that have been previously cleaned, washed, soaked or spotted with gasoline, dry cleaning solvents, cooking oils or other flammable or explosive substances, because they give off vapors that could ignite or explode.
- Do not allow children to play on or in washer / dryer. Supervise children whenever appliance is in use.
- Before removing appliance from service or discarding appliance, remove the door to washing/drying compartment.
- Do not reach into appliance while drum is moving.
- Do not install or store appliance where it will be exposed to the weather.
- Do not tamper with controls.
- Do not attempt to repair or replace any part of the appliance unless specifically recommended in the user instructions or in published user-repair instructions that you understand and are qualified to carry out. Call ASKO to locate a qualified repair technician near you.
- Do not add dry cleaning solvents, gasoline or other flammable or explosive substances to the wash water. These substances give off harmful vapors that can catch fire or explode.
- Do not heat-dry items containing foam rubber or similarly textured rubber-like materials, fiberglass and wool (unless specified “washable” on label).
- Do not heat-dry items that have been dry-cleaned.
- Do not place flammable substances around your washer/dryer during operation.
- If a hot water system has not been used for 2 weeks or more, under certain conditions, hydrogen gas may be produced. HYDROGEN GAS IS EXPLOSIVE. To release any accumulated hydrogen, turn on all hot water faucets and let the water flow from each for several minutes.
- In case of water break or rupture, turn off water faucets to relieve pressure on hoses and valves and to minimize leakage.
- Have machine interior cleaned by qualified service personnel periodically.
- When emergency service is required, unplug machine or turn off power to washer at the circuit breaker/fuse box.
- Make sure drum is empty before loading washer.
- Do not dry feather or down bedding

About Your Washer/Dryer

Your New Appliance

Your ASKO washer / dryer is a front-loading machine with a quality stainless steel tub, a vent-less condenser dry system, a 1200 RPM maximum spin speed and 140 minute Dry Time knob. It features 4 wash temperatures, 9 wash programs and many other convenient features such as:

Features

Fabric Care System

The gentle tumble action of your front-loading washer results in cleaner clothes with less wear and tear – and you can put delicate fabrics in the washing machine instead of hand-washing them. Tumble action also uses less water and detergent than conventional washers. In addition to the better wash action, your ASKO washer has an internal heater to boost temperatures to 140°F (60°C) for improved stain removal. After the clothes are clean, ASKO spins them dry at speeds up to 1200 RPM, which saves time and energy in the dryer and extends the life of your clothes. Your ASKO washer/dryer also has a reversing tub to keep clothes moving freely, to speed drying and reduce wrinkles.

ENERGY STAR® Rated

As the U.S.-government-backed, trusted symbol for energy efficiency, the ENERGY STAR label identifies highly efficient products and superior energy performance.

Load Management System

To keep your washer on an even keel, ASKO introduces the load management system. The WCAM 1812 features a four shock absorber suspension to reduce vibration when the washer spins. A cast-aluminum cradle supports the tank and evenly distributes the weight of the clothes.

Easy to use controls

Your ASKO laundry appliance has easy-to-use controls with familiar program names and convenient wash/dry options.

Coin trap

Your ASKO washer/dryer has a coin trap to keep small objects from blocking the pump. A small door on the front of the washer allows you to empty items, such as coins, to prevent the pump from jamming.

Water control system

The water system measures how much water is needed for each load. You never have to select the water level, because the washer automatically uses the right amount.

Quiet package

The ASKO washer/dryer features a package for quiet performance. The top holds in noise; the washer's drain pump is at the rear of the machine to reduce sound; the suspension system reduces vibration and minimizes noise.

Work top surface

The triple-layer DuraTech™ top locks in noise and provides a convenient surface for folding clothes or other laundry tasks.

Complies with ADA accessibility guidelines (Americans with Disabilities Act)

The ASKO washer/dryer fits easily into any standard American cabinet opening. All ASKO units are ADA height-compliant for convenient wheelchair access. For your convenience, your ASKO washer/dryer has controls on the front, making them easy to reach.

Internal (vent-less) condenser

Your ASKO washer/dryer uses a condenser dryer, so doesn't need a vent to the outside like a traditional dryer. Instead, the washer/dryer conveniently drains water through the drain hose. This makes it ideal for installation in closets, older homes without vents, RVs and marine applications.

Cool down program

Your ASKO dryer finishes with up to a 20-minute cool-down program to reduce wrinkles and decrease wear and tear on clothes. When you take your clothes out of the dryer, they are dry but not hot.

GETTING STARTED

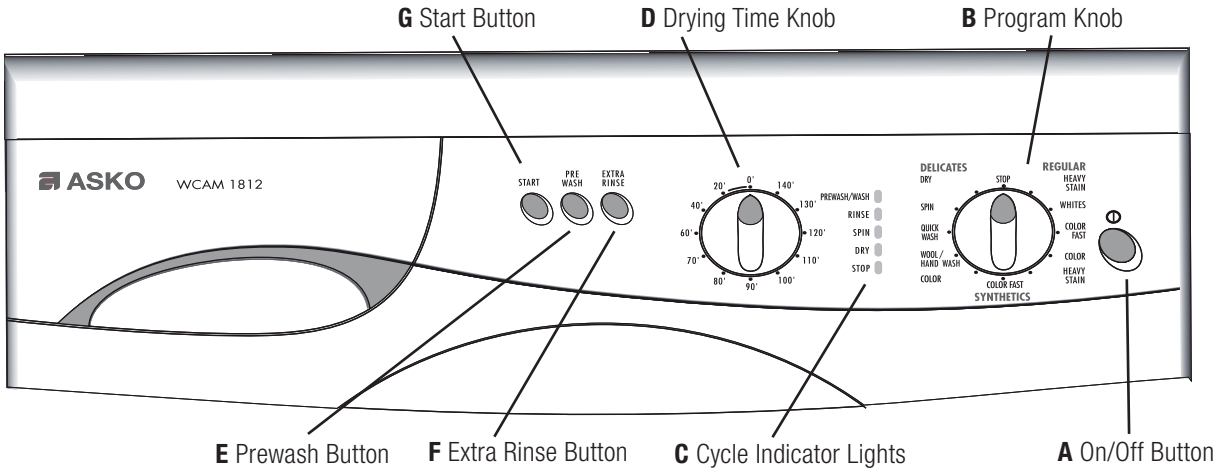

Understanding the Control Panel

On/Off Button (A)

Press this button to turn the main power to the machine on or off. When the power is on and the Program Knob is on the Stop position, the Start (G) button flashes.

Program Knob (B)

Refer to the table on pages 11-12 to determine the right program for your current wash load. Turn knob to select correct program.

Stop Position

To stop the machine after starting a program, turn the Program Knob to the Stop position. When you interrupt a program by turning the dial to Stop, the door lock remains engaged for a two-minute safety delay, after which you may open the machine door. To restart the machine, reposition the Program Knob and press Start (G).

If you wish to use the drying function only, turn Program Knob to dry and set the drying time with the Drying Time Knob.

Note: Before starting a program, the machine will drain any water already in the machine, so you may need to add detergent before you press Start (G).

Cycle Indicator Lights (C)

The light indicates progress of the wash/dry cycle as it occurs. When the Stop light glows, the program is complete. After a two-minute delay, the door lock will release so you can open the door.

Drying Time Knob (D)

Set knob to the number of minutes you wish to dry the load. See page 11 for recommended dry times. To prevent over-drying and damage to sensitive fabrics, start with a shorter time and add time until the load is dry. To use the dry function only, turn Program Knob to dry, set Drying Time Knob to number of minutes desired and press Start (G).

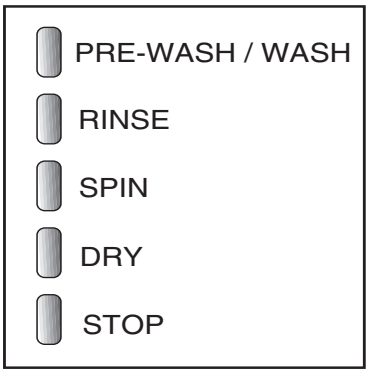

(C)

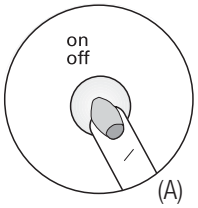

(A)

Pre-wash Button (E)

For heavily soiled items, press this button to run the pre-wash cycle. Be sure to put detergent in the pre-wash compartment of the detergent drawer. The button glows while the pre-wash cycle option is on.

Note: Pre-wash cannot be used with any Delicate program.

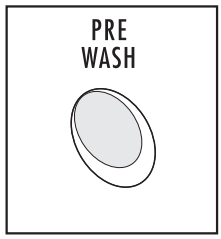

(E)

Extra Rinse Button (F)

Select this option to add one or two extra rinse cycles. The Extra Rinse Button glows when the option is on. See pages 11-12 for information regarding the number of rinse cycles added to various programs when you select this option. Recommended for those with soft water or detergent allergies. Note: Option not available with Quick Wash, Spin, and Dry programs.

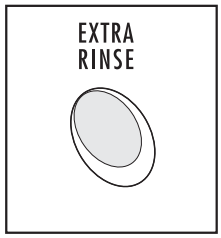

(F)

Start Button (G)

Once you have set the wash program, drying time, and pre-wash or extra rinse options, press this button to start the program.

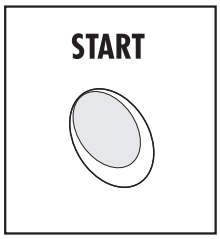

(G)

Preparing your Laundry

Separate Fabrics and Pre-treat

Ensure the best wash/dry results by preparing your laundry before you wash. Read and follow guidelines on fabric labels. Separate laundry by fabric type, color and fabric care instructions.

- Fasten all hooks, zippers and buttons to prevent snags and pulls.
- Tie strings, sashes, etc., and remove any non-washable trims, belts or buckles.
- Empty pockets of garments.
- Pre-treat stained or heavily soiled items.
- Put any delicate items – bras, shoulder pads, tights, hosiery, and underwear – in mesh laundry bag to prevent tangles.
- Mend any torn items to prevent further damage.

Pre-washing

For excessively soiled clothes with embedded dirt, such as work clothes or children's play clothes, use the pre-wash option and / or heavy stain program. Add the appropriate amount of HE* powdered laundry detergent to section #1 of the detergent dispenser.

Pre-treating

Use a pre-wash spray or stick, HE* liquid laundry detergent or HE* powdered laundry detergent water/paste mixture on stains before washing. See Stain Removal Chart, pg. 10, for specific stain treatments.

Choosing Laundry Aids

Laundry Detergent

The ASKO washer/dryer gets fabrics clean with smaller amounts of HE* laundry detergent. If you are used to a top-loading washer, use less detergent for wash loads.

Amount: Use 1 – 2 Tablespoons of (HE*) powdered laundry detergent, or the equivalent amount of high efficient (HE) liquid detergent. For Pre-washing Cycle, use 1-2 teaspoons of detergent depending on soil level of load. Low-suds detergents designed for front-loading machines, such as ASKO's own ecoVantage™ Laundry Detergent, are recommended.

Adjust amounts for heavily or lightly soiled garments. Use more in hard water; less in soft water. Pre-treated garments may require little to no additional detergent.

ecoVantage™ Laundry Detergent

For best results with your ASKO combination washer/dryer, use ecoVantage HE (high efficiency), low-sudsing laundry detergent. It's the only laundry detergent that has an oxygenated cleaning agent in a perfume & dye-free (sensitive) formula. Order ecoVantage by calling 800-898-1879 or go online at www.askousa.com.

Liquid Fabric Softener

Using fabric softener in the dispenser section (#3) helps items release from the drum after the spin cycle, helping clothes dry faster and wrinkle less.

Amount: Use 1-2 tablespoons per wash load of a bio-friendly brand. These softeners dissolve quicker and minimize build-up in the machine.

Adjust amounts for heavily or lightly soiled garments. Use more in hard water; less in soft water.

Note: Never exceed the recommended amount of liquid fabric softener and do not use fabric softener sheets. Doing either could cause damage to fabrics, your washer/dryer and impair wash results.

Bleach

Using liquid chlorine bleach is not recommended with the ASKO laundry products washer/dryer. However, for difficult-to-remove stains, use only non-chlorinated bleach (powder only). Mix approximately 1-2 teaspoons of non-chlorinated powdered bleach with powdered HE* detergent in section #2 of the detergent compartment

* HE = high efficient, low sudsing laundry detergent.

UNDERSTANDING FABRIC CARE LABELS

Garment labels contain important washing and drying instructions, often using small symbols. This table will help you interpret these symbols for better wash results and machine performance.

Machine Wash Cycle	Normal/Cotton Heavy Duty; Permanent Press/ wrinkle resistant; Delicate/Gentle; Hand wash only; Do not wash; Do not wring. Hang dry, drip dry or dry flat
Water Temperature	● ● ● Hot (50°C/120°F); ● ● Warm (40°C/105°F); ● Cold/Cool (30°C/85°F)
Tumble Dry	Dry; Normal/Cotton Heavy Duty; Permit Press/ wrinkle resistant; Delicate/ Gentle; Do not tumble dry; Do not dry
Special Instructions	Line dry/ hang to dry; Drip dry; Dry flat; In the shade
Bleach Symbols	Any bleach; Only non-chlorine bleach (when needed); Do not bleach

STAIN	TREATMENT
Adhesive tape, chewing gum, rubber cement	Apply Ice. Scrape off excess. Place stain face down on paper towels. Saturate with prewash stain remover or nonflammable dry cleaning fluid.
Beverages (coffee, tea, soda)	Pretreat stain, Wash using cold water.
Blood	Rinse w/cold water. Rub or pretreat or soak with product containing enzymes.
Collar or cuff soil, cosmetics	Pretreat with prewash stain remover or rub with bar of soap.
Dye transfer on white fabric	Use packaged color remover.
Ink	Some inks may be impossible to remove. Washing may set some inks. Use prewash stain remover, denatured alcohol.
Mildew, scorch	May be impossible. Soak in oxygen bleach and hot water before washing.
Mud	Brush off dry mud. Pretreat or soak with product containing enzymes.
Paint, varnish	WATER BASED: Rinse fabric in cool water while stain is wet. Wash. Once paint is dry, it cannot be removed. OIL BASED AND VARNISH: Stain should never be washed in your machine.
Perspiration	Use pre-wash stain remover or rub with bar soap. Rinse. Wash in hottest water safe for fabric.
Rust, brown or yellow or discoloration	SPOTS: use rust remover safe for fabric. DISCOLORATION OF ENTIRE LOAD: use phosphate detergent.

WASH & DRY PROGRAMMING

PROGRAM	LOAD SIZE	MAIN WASH	RINSES	SPIN	DRY
REGULAR					
HEAVY STAIN	HALF	65 MIN	30 MIN	7 MIN	120 MIN
WHITES	HALF	51 MIN	27 MIN	11 MIN	100 MIN
COLOR FAST	HALF	51 MIN	37 MIN	11 MIN	100 MIN
COLOR	HALF	42 MIN	37 MIN	11 MIN	100 MIN
SYNTHETICS					
HEAVY STAIN	HALF	31 MIN	26 MIN	11 MIN	100 MIN
COLOR FAST	HALF	22 MIN	35 MIN	11 MIN	60 MIN
COLOR	HALF	20 MIN	45 MIN	11 MIN	60 MIN
DELICATES					
WOOL/HAND WASH*	HALF	32 MIN	24 MIN	8 MIN	N/A
QUICK WASH	HALF	15 MIN	24 MIN	8 MIN	60 MIN

* When setting the dry time for the Wool/Hand-wash program the dryer will not go into dry automatically. For dry only loads follow the dry times noted above.

LOAD EXAMPLES - 7.5 LBS. (Half Load)

1. Denim load 5 items **2 HOURS DRY TIME**

1 Blouse

1 Dress

3 Pair Blue Jeans

2. Bath towels 5 towels 48" x 29" **2 HOURS DRY TIME**

Dry times will vary with load sizes, however these items are the heaviest items to dry and are a good barometer.

3. Bedding 5 items **2 HOURS DRY TIME**

1 King Fitted Sheet

2 King Pillow Cases

2 Perma Press shirts or blouses

(For best results wash and dry the flat and fitted sheets separately to minimize tangling of the fabrics.)

Dry Time can be set up to 140 minutes. The total time of dry will depend on the size and type of load being washed and dried.

Regular Program has a cool down of 20 minutes at the end of the dry cycle.

Synthetics program has a cool down of 10 minutes at the end of the dry cycle.

Wool/Hand wash has no dry capability. These garments should be either hung to dry or laid flat on a clean, smooth surface.

* Load sizes and dry times are approximate. Your results might vary based on fabric type and load size.

WASH ONLY PROGRAMS

EXTRA RINSE BUTTON

This button sets the program to add one or two rinse cycles. The button will glow when this option is on. See the Wash Program table below for an explanation of the number of rinse cycles added to each program.

Three rinses are usually sufficient, but if you live in an area with very soft water or you are allergic to detergent, you may want to use this option.

PRE-WASH BUTTON

Be sure to put detergent in the pre-wash compartment of the detergent drawer. The button glows while the pre-wash cycle option is on.

For heavily soiled items, use the pre-wash cycle. Be sure to put detergent in the pre-wash compartment of the detergent drawer. The button glows while the pre-wash cycle option is on.

Note: Pre-wash cannot be used with any Delicate program.
This option is only available in the Regular and Synthetics Cycles.

The table below defines each wash program in detail to help you determine which program is best for each type of load. Load size is for wash only!

PROGRAM	TEMP	SOIL LEVEL	FABRICS	LOAD SIZE (1)	PROGRAM DESCRIPTION	SPIN SPEED	OPTIONS AVAILABLE	
							PREWASH	EXTRA RINSE
REGULAR								
HEAVY STAIN (2)	HOT	HEAVY	COTTON, LINENS	FULL	LONG MAIN WASH, 3 RINSES, DRAIN & SPIN	1200	YES	2
WHITES	HOT	HEAVY	COTTONS, LINENS, BLENDS SYNTHETICS	FULL	MAIN WASH, 3 RINSES, DRAIN & SPIN	1200	YES	2
COLOR FAST	WARM	HEAVY	COTTONS, LINENS, BLENDS SYNTHETICS	FULL	MAIN WASH, 3 RINSES, DRAIN & SPIN	1200	YES	2
COLOR	COLD	LIGHT	COTTONS, LINENS, BLENDS SYNTHETICS	FULL	COTTONS, LINENS, BLENDS SYNTHETICS	1200	YES	2
SYNTHETICS								
HEAVY STAIN	HOT	HEAVY	COTTONS, LINENS, BLENDS SYNTHETICS	HALF	LONG MAIN WASH, 2 RINSES, DRAIN & SPIN	800	YES	1
COLOR FAST	WARM	LIGHT	COTTONS, LINENS, BLENDS SYNTHETICS	HALF	MAIN WASH, 2 RINSES, DRAIN & SPIN	800	YES	1
COLOR	COLD	LIGHT	COTTONS, LINENS, BLENDS SYNTHETICS	HALF	MAIN WASH, 2 RINSES, DRAIN & SPIN	800	YES	1
DELICATES								
WOOL/HAND WASH (3)	WARM	LIGHT	MACHINE-WASHABLE WOOL AND SILK, NYLON	ONE-THIRD	HIGH-WATER LEVEL WASH, 3 RINSES, DRAIN, GENTLE SPIN	550	N/A	1
QUICK WASH	WARM	LIGHT	LIGHTLY SOILED, NORMAL FABRIC	FULL	HIGH-WATER LEVEL WASH, 2 RINSES, DRAIN, GENTLE SPIN	1200	N/A	N/A
SPIN	N/A	N/A	COTTONS, LINENS, BLENDS SYNTHETICS	FULL	DRAIN 7 INTENSIVE SPIN	1200	N/A	N/A

START BUTTON

After you have set the program, prewash or extra rinse option, press this button to start the program.

NOTES:

(1) For an explanation of the recommended load sizes, see page 11.

(2) When you select the Heavy Stain program, the unit heats the water to 140˚F for the main wash for improved stain removal performance.

(3) The Wool/Hand Wash program has an 550 rpm spin speed to eliminate stress on delicate fabrics.

Load types and sizes

A different kind of machine

In some ways, using your ASKO washer/dryer is much different than using traditional, separate laundry products. First, the load sizes will be smaller, since both washing and drying occur in the same drum. The wash cycle is about the same as a traditional washer, but drying times will be longer. You will become accustomed to doing smaller, more convenient loads of laundry instead of doing bulkier loads less frequently.

Choosing drying times and load sizes

Drying times depend on fabric dampness and the size and type of the load. Jeans, towels and other thick fabrics take longer to dry.

For the condenser dryer to operate properly, items must be able to tumble freely in the drum. If you overload the drum, your laundry will not dry properly. In general, if your dry time is more than 140 minutes, reduce the load size.

Tips for best results

Use a combination of small and large items to make a full load. Rather than washing a single towel, sweater or pair of jeans, add a few similar items to balance the load. Single, heavy items such as a terry bathrobe may be washed separately.

Cotton and linen fabrics should be washed in full loads while using the “wash only” mode. When using the “wash / dry” mode, the capacity should always be at half load or less.

Permanent press fabrics need more room to move freely during washing; fill the machine half full for best results on permanent press items.

Delicate fabrics, such as machine washable wool and silk, should be washed in one-third sized loads for best results.

Do not use the machine to wash torn, frayed or linens with raw hems. If such items must be machine-washed, place in a mesh bag for protection.

Do not wash whites and colored linens together. Do not machine-wash rugs that could come apart and clog the pump of the machine.

Turn colored and printed t-shirts and sweatshirts inside out before washing to make them last longer. Always iron such items inside out.

Protect delicate underwear, tights, stockings and other fragile garments by putting in a mesh laundry pouch to wash and dry.

Overalls have straps with hooks that can damage your washing machine and other garments during the wash/dry cycle. Minimize risk by placing hooks in pockets and secure with safety pins.

NOTE: You will become accustomed to the best methods the more you use your new ASKO washer/dryer product. It would be better to start with smaller loads and amounts of detergent which you can adjust over time.

Using the Detergent Dispenser Drawer

The dispenser drawer has 3 compartments, for (1) pre-wash, (2) main wash and (3) fabric softener as shown (Fig. 9). The machine automatically dispenses the detergent and softener at the proper times in the cycle.

To load the dispenser, simply pull out the drawer and add the appropriate amounts of HE powdered detergent and liquid fabric softener into the compartments noted above. Do not add detergent to the pre-wash compartment unless you are using a program with a pre-wash cycle. Otherwise, the machine may over-suds and spill onto the floor.

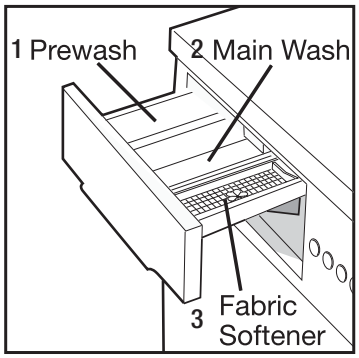

Fig. 9

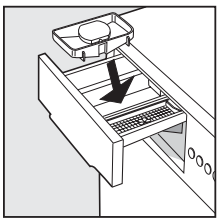

Fig. 9 A

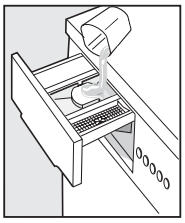

Fig. 9 B

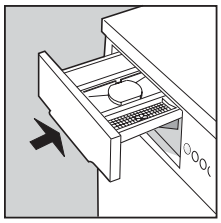

Fig. 9 C

NOTE: When using a liquid detergent, insert the special container supplied with the washer into the main wash compartment (Fig 9a). Pour the manufacturer’s recommended dosage of HE liquid detergent into the container (Fig 9b). Close detergent dispenser (fig 9c).

After loading clothes and detergent

1. Close detergent drawer

2. Close washer door securely

3. Set wash / dry programs

4. Press Start

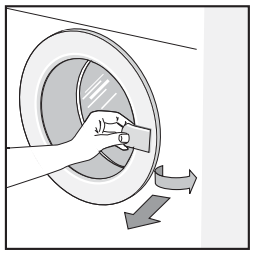

Fig. 9 D

Cleaning the Detergent Dispenser Drawer

When detergent builds up in and around the drawer, remove the drawer by pressing on the plastic part of the softener compartment marked “PUSH” (Fig. 10A). Place under running water for a few minutes to remove buildup. Clean and wipe out the area around the dispenser with a damp cloth before replacing the drawer.

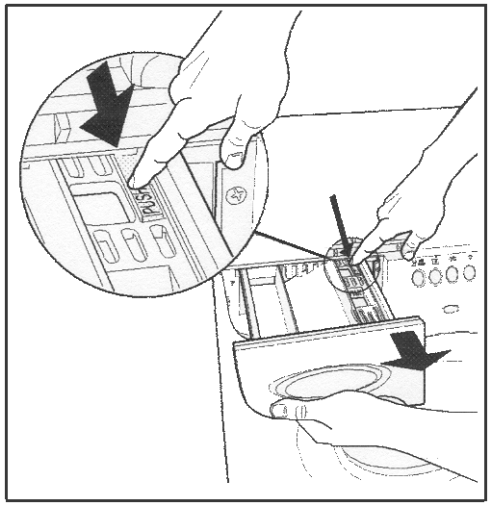

Fig. 10A

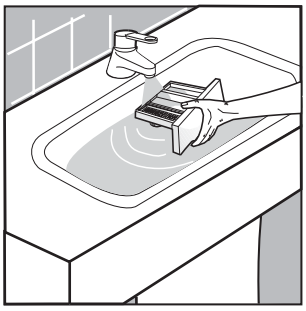

Tips

Do not use liquid detergent for pre-wash because the detergent will wash out of the drawer. Use only (HE) powdered detergent in the pre-wash compartment.

Use low-suds high efficient (HE) detergent made for front-loading washers. For HE detergents, use only 1 – 2 tablespoons. Too much detergent can leave residue on your clothing and damage the washer/dryer.

Do not use hand-washing detergent, as it may foam too much and damage your machine.

Do not over use Fabric Softener. Use 1 to 2 tablespoons only!

Reduce the amount of detergent for cold water washing, as it dissolves less easily in cold water.

Do not exceed recommended amounts of detergent and softener, as it will result in poor washing, rinsing, and drying efficiency.

For (HE) liquid detergent use, refer to page 13.

Operation

Using Your Washer/Dryer

Operating your ASKO washer/dryer correctly affects your wash and dry quality and extends the life of the machine. Before using the washer/dryer, make sure you are familiar with the proper load sizes (See Load Types and Sizes, pages 11-12).

Add detergent and fabric softener according to directions (see Using the Laundry Aid Dispenser, page 13), then check to make sure that:

- Detergent drawer is completely closed
- Plug is securely in the electrical outlet
- Water supply is on
- Machine door is closed securely

To start the Wash / Dry Program:

Press On/Off button.

Set Wash Program Knob to the desired program for your current load (see Guide to Wash Programs, pages 11-12).

Turn Drying Time Knob to desired number of minutes. (See Wash and Dry Programs, page 11)

Select options for Pre-wash or Extra Rinse if desired.

Add appropriate amounts of HE detergent and fabric softener into dispenser.

Press Start to begin the cycle.

Note: For more information on correct use of controls, see Understanding the Control Panel, page 8.

To start the Wash only program:

(see wash only programs, page 12)

Follow steps above, leaving Drying Time Knob set to 0.

Note: At end of program, door lock remains engaged for 2 minutes, after which you can open the door.

To start the Dry only program:

(see wash only programs, page 12)

Turn Wash program knob to Dry position.

Set drying time knob to number of minutes of drying time desired.

Press Start.

Reset Program / Add Garment

To stop the machine after a program has started, turn Wash Program Knob to Stop. To restart the program, reposition the Wash Program Knob and
press Start.

TO ADD A GARMENT

- TURN PROGRAM KNOB TO STOP
- WAIT 2 MINS FOR THE SAFETY DOOR CATCH TO RELEASE
- ADD YOUR GARMENT (continued on next page)
- CLOSE DOOR SECURELY

- ADD ADDITIONAL DETERGENT AND FABRIC SOFTENER INTO DISPENSER IF NEEDED.
- CLOSE DETERGENT COMPARTMENT
- RESET WASH PROGRAM KNOB TO DESIRED PROGRAM
- PRESS THE START BUTTON

Check detergent dispenser, add if needed. Do not attempt to force open the door while the door lock is engaged. The door remains locked for approx. two minutes after the wash/dry program finishes.

Use “Quick Wash” to wash loads of lightly soiled items in less time.

Do not use dryer for clothes that have been cleaned with chemical solvents or flammable cleaners. Dry only clothes that have been washed in water.

Do not use dryer for foam rubber or similar synthetic items. Do not use for feather or down bedding.

Do not use fabric softener sheets. Use liquid fabric softener during the wash cycle for best results for a complete wash/dry cycle.

After you remove your laundry, leave door open for a few minutes to allow air to circulate inside the tub and avoid odors.

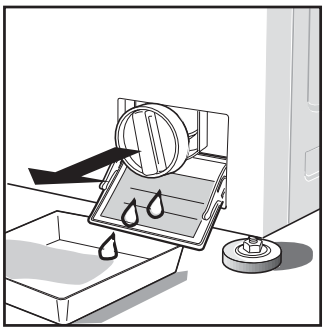

FIG 12

Taking Care of your Washer/Dryer

Exterior cleaning

Wipe the outside of your machine with a damp, soapy cloth. Do not use harsh chemicals or abrasive items to clean plastic parts.

Coin Trap cleaning

Clean the coin trap at least four times a year. Be sure unit has drained before opening trap door.

- Place towel or pan under trap door (Fig. 12) to catch any water.
- Remove trap by turning it slowly counterclockwise until water appears. (Fig. 13).

FIG 13

- Empty water through coin trap. Pull coin trap straight out and clean.
- Replace coin trap and turn clockwise until secure (Fig. 14). Gently tug cap to confirm that trap is secure.

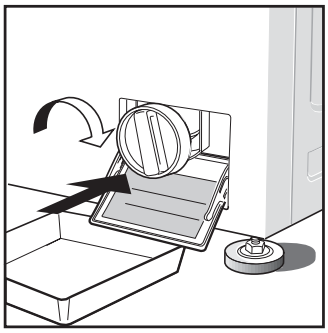

FIG 14

Interior cleaning

If you use a non-phosphate laundry detergent, you may need to clean buildup and oils from the inside of the washer periodically, especially if you live in an area with hard water. To remove buildup, run the washer through a complete hot water cycle (Heavy Stain or White setting) with no clothes, detergent or other laundry aids added. If desired, add 2 cups of water conditioner or de-liming agent to the detergent dispenser.

General care of the machine

Never use solvents or abrasives to clean the external parts of the washer/dryer.

Water supply should be turned off when not in use.

Unplug the machine if you will be gone for a period of time or the machine will not be used.

Clean the detergent drawer periodically (see Cleaning Dispenser, pg. 13).

Always unplug the machine during cleaning or maintenance.

Do not use too much detergent or other laundry additives, as excessive amounts could over-suds and damage your washer/dryer.

Before moving the washer/dryer to a new location, reattach shipping bolts, spacers and grommets that were removed during installation (see page 4).

TROUBLESHOOTING

Is using a ASKO combination washer/dryer different than a traditional "stand-alone" washer and dryer?

Yes. In a ASKO combination laundry product, you wash / dry in the same tub. Cycle times will be longer and overall load sizes will be smaller. Wash cycle times are similar, but because combination washer / dryer products operate using a standard household electrical supply (120V vs. 230V), dry times are longer and capacity is reduced by 50% when using the dry program. The overall convenience of this laundry solution far outweighs the need to manage your laundry requirements with smaller, more frequent laundry loads.

Most issues with your washer/dryer can be solved without a technician. Before calling for service, check the following.

Machine Runs Too Long

Your machine is a combination washer/dryer and depending on load size, fabric, and programs selected, could take as long as 4 1/2 hours to complete the program.

Washer does not work/light is not on.

Press On/Off button

Make sure power supply is securely in electrical outlet

Make sure door is closed securely (press inward on door handle)

Check main power supply and/or house breaker/fuse

Indicator light is on but unit does not work

Make sure door is closed securely (press inward on door handle)

Press On/Off button firmly

Check Program Knob to be sure it is on a program

Press start button

Make sure power supply securely in electrical outlet

Washer does not fill with water

Make sure door is closed securely (press inward on door handle)

Check home water supply and pressure

Make sure water faucet to machine is open

Check for obstructions in water hoses

Clean inlet filters between valves and water hoses

Washer fills and drains continuously

Make sure drain hose is at correct height (pages 4-5)

If draining into sink, make sure drain hose outlet is not under water

Washer does not drain and spin

Make sure drain hose is in correct position (pages 4-5)

Check for kinks and/or obstructions in drain hose

Clean detergent dispenser, if encrusted with residue or clogged

Check Coin Trap for obstructions, clean and reinstall. (page 5)

Load should be properly balanced for maximum water extraction

Use less detergent or low-suds detergent for front-loading washers

Washer/dryer vibrates and is noisy

Ensure that shipping bolts, spacers and grommets have been removed (page 4)

Check that fabrics in tub are not tangled

Make sure machine is level and installed on a secure floor / platform (page 5)

Door will not open

For your safety, door remains locked for approx. two minutes after completion of a wash/dry program.

How can I improve drying performance?

Never overload the tub! The rule of thumb for efficient drying is a laundry load that represents a half load (7.5 lbs) of the tub capacity (15 lbs).

Important note: The dry capacity is one-half (50%) of the wash capacity.

Use 1-2 tablespoons of a liquid fabric softener with each load - softer clothes separate more effectively to allow faster drying with less wrinkles.

Drying times vary based on the type of fabric (heavier fabrics retain more moisture), the amount of moisture retained in the fabric after the wash cycle (1200 RPM spin for regular fabrics vs. 800 for synthetic press fabrics - 550 RPM spin for delicate fabrics) and the size of the laundry load. DO NOT OVERLOAD THE TUB!

When you remove items after the dry cycle is complete, they may feel slightly damp to the touch even though they are actually dry. This is a normal performance characteristic of a condensing dryer product. Remove items from tub, fluff clothing by shaking gently to allow any humidity to dissipate before folding or hanging.

Make sure the cold water supply is turned on during the entire laundry (wash / dry) program. This product requires cold water to operate the dry program.

Dryer does not dry properly

Reduce load size (page 11)

Check Coin Trap for obstructions, clean and reinstall (page 15)

Be sure you use a HE low suds detergent and the proper amount of fabric softener.

Make sure cold water is supplied throughout dry cycle

If the problem persists, call our Customer Care Center at 800.898.1879 for further assistance. When you call, have the following information:

1) Appliance model number

2) Serial number of the machine (located on the inner door facing)

3) Purchase date

Why are soap suds seeping from the outside door seal or detergent dispenser?

This is referred to as "over-sudsing". Using proper amounts (1-2 tablespoons) of a low-sudsing, HE "High-Efficiency" powder detergent and fabric softener to prevent over-sudsing. Over time, over-sudsing

will create a build up in the drying chamber and fan blower with lint particles, reducing overall drying efficiency, and possibly damaging your product (page 9).

Liquid detergents (Non-HE) are not recommended because they produce too much foam, but if you prefer to use a liquid detergent, do not use more than 1 tablespoon of HE liquid detergent.

Common Laundry Problems

Your ASKO Washer/Dryer can safely wash and dry most items. Read and follow fabric care label instructions for best results. Some common laundry problems can be remedied easily using the suggestions that follow.

Note: You are solely responsible for what you put into your ASKO Washer/Dryer.

Graying or Yellowing

You may need slightly more detergent for heavily soiled or stained clothes or if you have hard water.

Select the hottest temperature recommended for your fabric and wash load.

Pre-wash heavily soiled or stained items.

Reduce size of load so that wet clothes have room to tumble freely.

Be sure to use HE laundry detergent, not “soap.”

Install a water filter or use water conditioner weekly if water contains excessive iron or manganese.

Lint or residue on clothes

Separate clothes that shed lint, such as terry cloth and chenille, from clothes that attract lint, such as synthetics, corduroy, velveteen.

Use a low phosphate detergent to reduce residue that can appear to be lint. Install a water softener if possible.

Use fabric softener only as directed, by adding to the softener compartment of the dispenser drawer. Softeners mixed with detergents in the wash cycle can leave a white residue (page 13).

To reduce piling, which can look like lint, turn cotton/polyester blend fabrics inside out and use delicate cycle.

Excessive shrinkage / fabric damage

Follow garment care label instructions carefully. Make sure fabric is washed and dried accordingly.

Some garments can be reshaped by ironing after washing and drying.

Fading and discoloration ...use appropriate wash programs

Wash in cool or cold water to retain dark or bright colors.

Separate dark items from light items. Dark clothes, especially cottons, can bleed into wash water. White and light-colored clothes may absorb these dyes.

Always empty pockets before washing.

Stains

Select Heavy Stain program for the appropriate fabric type (Normal or Synthetics). Protein stains such as milk, egg, blood and soy should be washed in cold water. Oily stains should be washed in the hottest water safe for the fabric type.

Old stains may be hard to remove. Treat stains promptly and do not set stains by drying or ironing fabrics until stains are completely removed.

Excessive wrinkling

Do not overfill machine. Wash synthetic fabrics items in half loads to minimize wrinkling.

Use the correct wash program temperature setting for fabric type.

Synthetics press items in smaller loads. Do not mix with heavy items such as towels or jeans.

Snags, tears, excessive wear

Empty all pockets and turn inside out before washing.

Fasten all hooks, snaps and zippers to avoid snags. Remove sharp buckles.

Wash knits inside out.

Do not wash items soiled with harsh chemicals (hair care products, cleaning solutions, etc.) with towels or other items that can be damaged by the chemicals.

Mend items before laundering.

Wash synthetics press items in smaller loads. Do not mix with heavy items such as towels or jeans.

Where’s the lint filter?

We refer to this feature as a coin-trap. Its conveniently located on the lower right side of the front panel for easy access. This important feature prevents any items (coins, pins, etc) left in your pockets from damaging the drain pump. This coin-trap should be cleaned at least 4 times each year (more often with heavy family use).

Wash & Dry load examples.

With traditional washer and dryer products, the dryer tub is twice the size of the washer to allow for the clothes to tumble freely. With your ASKO combination washer / dryer product, you wash and dry in the same tub (2.5 cu. ft). If you wash a full load (15lbs), you need to remove half (7.5 lbs) of the fabric before starting a dry program. When you select the combination mode (wash to dry automatically), load the tub to accommodate this half load requirement.

Denim load 5 items (half-load) **2 HOURS DRY TIME**

1 Blouse

1 Dress

3 Pair Blue Jeans

Bath towels 5 towels 48” x 29” **2 HOURS DRY TIME**

Dry times will vary with load sizes, however these items are the heaviest items to dry and are a good barometer.

Bedding 5 items **2 HOURS DRY TIME**

1 King Fitted Sheet

2 King Pillow Cases

2 Perma Press shirts or blouses

(For best results wash and dry the flat and fitted sheets separately)

* load sizes are estimates. Your results might vary based on fabric type and load size.

PRODUCT WARRANTY

Model WCAM 1812

Complete the Warranty Registration Card that came with your appliance and mail it to AM Appliance Group to validate your appliance warranty. Report cosmetic damage to your dealer within five days from date of purchase. Thoroughly check for cosmetic damage after unpacking the unit.

WARRANTY FOR RESIDENTIAL INSTALLATIONS:

For Single-Family Residential installations in the continental U.S. and Canada (excluding Puerto Rico).

Three Year Full Warranty from date of purchase.

AM Appliance group covers ASKO replacement parts and/or repair labor to correct defect in materials or workmanship. Service must be provided by an authorized ASKO service agent.

Fourth and Fifth Year Limited Warranty from date of purchase.

AM Appliance group covers ASKO replacement parts (labor costs not included) for any defective solid-state controls, timers, motors, or pumps Service must be provided by an authorized ASKO service agent.

Lifetime Limited Warranty from date of purchase.

AM Appliance group covers ASKO replacement parts (labor not included) of the stainless steel tank if it fails to hold water due to a manufacturing defect, such as rusting or cracking. Service must be provided by an authorized ASKO service agent.

WARRANTY FOR NON-RESIDENTIAL INSTALLATIONS:

For Non-Residential installations in the continental U.S. and Canada (excluding Puerto Rico).

(Apartment, Time Share, Multi-Housing applications)

One-Year Full Warranty from date of purchase

AM Appliance Group covers ASKO replacement parts and/or repair labor to correct defect in materials or workmanship. Service must be provided by an authorized ASKO service agent.

Exclusions to warranty. AM Appliance group will not pay for:

1. Service calls to:

- Correct improper installation of the appliance.
- Repair damage due to shipment, delivery, installation, misuse or abuse.
- Instruct how to use the appliance.
- Replace house fuses or correct house wiring.
- Correct house plumbing, including drainage problems related to improper installation.
- Clean or service air device in drain line.

2. Repair and/or replacement parts for failure of product if appliance is used for other than residential use.
3. Damage resulting from accident, fire, floods, acts of God, alteration, misuse, abuse, improper installation or installation not in accordance with local electrical or plumbing codes.
4. Any shipping costs for parts during the limited warranty period.
5. Replacement parts or repair labor costs for units operated outside the continental United States.
6. Pickup and delivery. ASKO appliances are designed for repair in the home.

IN NO EVENT SHALL AM APPLIANCE GROUP BE RESPONSIBLE FOR ANY INCIDENTAL OR CONSEQUENTIAL DAMAGES.

Some states will not allow the exclusion or limitation of incidental or consequential damages, so this exclusion or limitation may not apply to you. This warranty gives you specific legal rights and you may also have other rights, which vary from state to state.

For warranty service, contact our Customer Care center at the number below. Service will be provided during normal business hours. Should you have a service problem that cannot be resolved locally, contact AM Appliance Group at the numbers listed below. Before calling for service or contacting AM Appliance Group regarding a warranty issue, make a note of the model number, serial number and date of purchase.

Write to us at:

AM Appliance Group

P. O. Box 851805

Richardson, Texas 75085-1805
www.askousa.com

Or call:

Customer Care Center at
800-898-1879

STERLING.

A KOHLER COMPANY

ROCKTON™

DUAL FORCE™ LOW CONSUMPTION TOILET
402024

Features

- *12" (30.5 cm) rough-in*
- *Modern styling made of Grade A vitreous china*
- *One flush performance limited guarantee*
- *2" (5.1 cm) glazed trapway*
- *Regular bowl*
- *Standard regular seat - not supplied*
- *Seat post holes with 5-1/2" (14 cm) centers*
- *5 year limited warranty*
- *Dual Force™ flushing system*
- *1.6 gpm (6 lpf) or .8 gpm (3 lpf)*
- *Two-bolt installation system*

Codes/Standards Applicable

Specified model meets or exceeds the following:

- *ASME A112.19.2*
- *IAPMO/UPC*
- *ASME A112.19.14*
- *CSA B45*

Colors/Finishes

- 0: White
- Other: Refer to Price Book for additional colors/finishes

Accessories:

- NA: None applicable

Specified Model

Model	Description	Included tank	Included bowl	Colors/Finishes	
402024	Regular front toilet, 12" (30.5 cm) rough-in	402022	402021	❑ 0 White	❑ Other_____

SterlingPlumbing.com

Visit us online for fixture color choices, detailed product information, color photos, installation instructions, care guides, and warranties. Sterling offers additional lines of plumbing products to complement the Sterling product you've chosen. Sign up for the Sterling monthly e-newsletter which showcases our latest product innovations. You may also call our Sterling Plumbing Answer Center from within the USA at 1-888-STERLING in addition to consulting with your local dealer. Sterling. Strong. Professional. Design.

TECHNICAL INFORMATION REPORT	
Product Data	No. T-1.1

Thermocore
Structural Insulated Panel Systems

Thermocore's energy savings have been recognized by the EPA's *Energy Star* program.

General Description

Thermocore™ structural insulated panels are high quality urethane foam core panels used in both residential and commercial applications as exterior wall and roof systems. This unique one-piece product provides superior strength and insulation properties replacing conventional framing and insulation commonly found in home's today. Thermocore™ panels come with a limited lifetime warranty and are designed to enclose and/or support all building types.

Thermocore™ panels are pre-configured to exact custom shapes to create complete wall and roof enclosure systems while eliminating on-site waste. Each panel is composed of a polyurethane core with interior and exterior skins of oriented strand board. Panels are manufactured utilizing an injection system in which the foam bonds directly to the skins, providing the highest bond strength possible. Thermocore's™ Thermopanels come complete with "molded in place" door and window bucks, subfacia, tongue and groove joints, and electrical conduit/boxes pre-installed, thereby saving considerable installation time and expense. Thermocore's™ Thermopanels can be pre-configured and pre-engineered to fit any building application. Thermopanels will allow you to build faster, stronger, and a more energy efficient home while lowering the cost of owning your home.

Thermocore™ Thermopanel™

Structural Insulated Panel

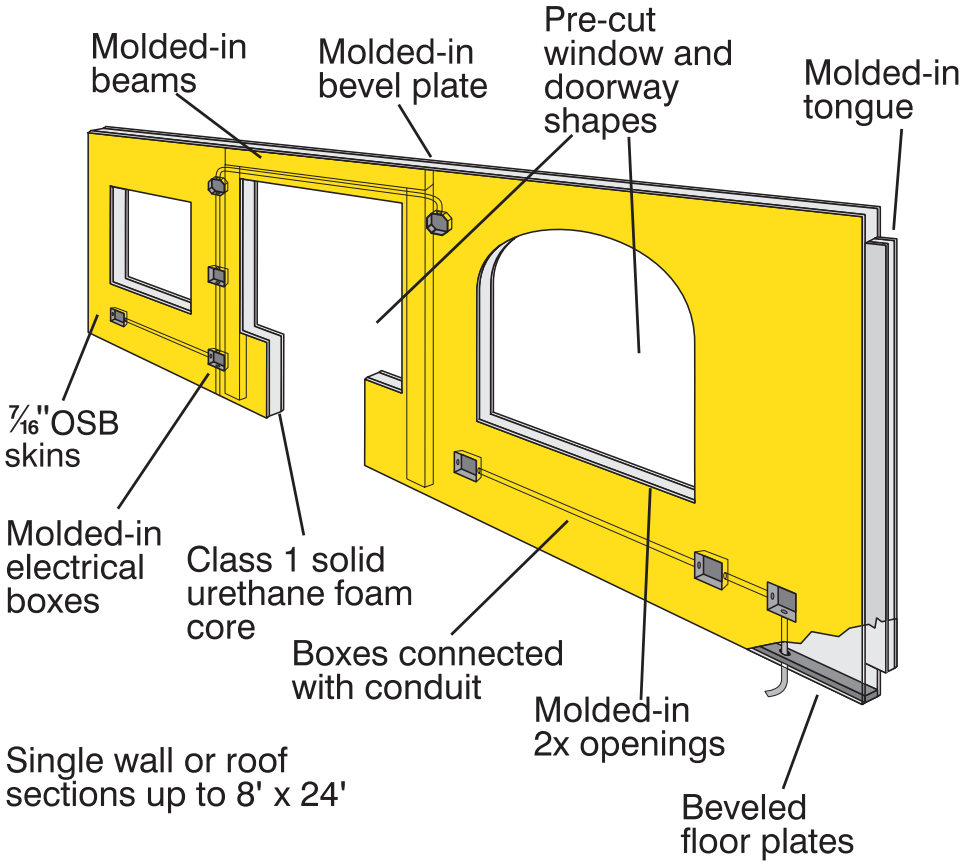

Physical Properties

Insulation Core – 3 1/8,'' 3 9/16'' wall and 5 9/16'' roof polyurethane, 2.2 lb. density, Class I, closed-cell foam. No formaldehyde or CFC's are contained in this product.

Outer/Inner Skin – 7/16'' oriented strand board. All OSB is APA rated for structural use. All OSB is exterior grade.

Adhesion – Injected foam expanding into the two skins under pressure insures a superior bond, making these composite panels some of the strongest in the industry.

Overall Thickness – Wall: 4,'' 4 1/2'' Roof: 6 7/16'' +/– 1/16''

Minimum R Value – Wall: R-24, 28 Roof: R-40

Structural Properties of Foam

Compressive Strength – 26psi
Tensile Strength – 18psi
Shear Strength / Modulus – 22/300psi
Porosity – 95%

Fire Safety

Foam Fire Rating – Class I
Flame Spread – 20 (ASTM E-84)
Smoke Developed – 300 (ASTM E-84)
Structural Integrity in Fire – Polyurethane foam is a thermoset plastic which does not melt. It maintains structural integrity until consumed.

Warranty

Thermocore™ panels come with a limited lifetime warranty covering defects in materials and workmanship. For complete warranty, contact the company.

For More Information

For additional information on panels, design, and pricing, contact:

Thermocore™ Panel Systems
1801 Hancel Parkway
Mooresville, Indiana 46158
Phone: (317) 831-8888
Fax: (317) 831-8889
Toll Free: (877) 550-8973
www.thermocore.com
salesinfo@thermocore.com

Thermocore's energy savings have been recognized by the EPA's *Energy Star* program.

NTA INC.

ENGINEERS
PLANNERS
CONSULTANTS

305 NORTH OAKLAND AVENUE · P.O. BOX 490 · NAPPANEE, INDIANA 46550
WEB: WWW.NTAINC.COM

PHONE: 574-773-7975
FAX: 574-773-5739

February 1, 2005
TPS020105-11

Stephan Johannesmeyer
Thermocore of Missouri
8805 Stoney Gap Rd.
Jefferson City, Missouri 65101

RE: THERMOCORE OF MISSOURI COMPLIANCE WITH ICC REQUIREMENTS

Dear Mr. Johannesmeyer:

NTA, Inc. has been working with Thermocore of Missouri toward the goal of obtaining an ICC-ES evaluation report. The basis for such a report is ICC-ES AC04, which establishes the criteria for the use of structural insulated panels (SIP) under the International Codes. While I am not aware of your company's current application status with ICC-ES, NTA, Inc. has reviewed your existing test data and in-plant QA program and has found these items to conform to the requirements of ICC-ES AC04.

As you know, issuance of an ICC-ES evaluation report typically requires a substantial amount of time—usually six months to one year from the time of application. When marketing your product during this period it is important to note that the International Codes do not require a product to have an ICC evaluation report. In fact, many commonly used building products do not have reports. Moreover, section 104.11 of the 2001 *International Building Code* permits the use of alternative materials, design and methods of construction where the "proposed design is satisfactory and complies with the intent of the provisions of the code." The seal of a registered design professional on the plans signifies that the plans are satisfactory and comply with the requirements and intent of the code.

If you have any additional questions or comments regarding this matter please contact me at your convenience at (574) 773-7975.

Respectfully,

Eric J. Tompos, P.E.
Vice President
NTA, Inc.

TPS020105-11 2005-02-01.doc
Form Prepared By: Eric Tompos
Reviewed/Approved By: Ken Brower

Issued/Revised: 02/01/05
Page 1 of 1

ICC EVALUATION SERVICE, INC.
Evaluate ■ Inform ■ Protect

ACCEPTANCE CRITERIA FOR SANDWICH PANELS

AC04

Approved February 2004

Effective March 1, 2004

(Editorially corrected, October 2004)

Previously approved September 2002, July 2001, April 2001, July 1996 May 1995, January 1995, April 1994, April 1977

PREFACE

Evaluation reports issued by ICC Evaluation Service, Inc. (ICC-ES), are based upon performance features of the International family of codes and other widely adopted code families, including the Uniform Codes, the BOCA National Codes, and the SBCCI Standard Codes. Section 104.11 of the *International Building Code®* reads as follows:

> The provisions of this code are not intended to prevent the installation of any materials or to prohibit any design or method of construction not specifically prescribed by this code, provided that any such alternative has been approved. An alternative material, design or method of construction shall be approved where the building official finds that the proposed design is satisfactory and complies with the intent of the provisions of this code, and that the material, method or work offered is, for the purpose intended, at least the equivalent of that prescribed in this code in quality, strength, effectiveness, fire resistance, durability and safety.

Similar provisions are contained in the Uniform Codes, the National Codes, and the Standard Codes.

This acceptance criteria has been issued to provide all interested parties with guidelines for demonstrating compliance with performance features of the applicable code(s) referenced in the acceptance criteria. The criteria was developed and adopted following public hearings conducted by the ICC-ES Evaluation Committee, and is effective on the date shown above. All reports issued or reissued on or after the effective date must comply with this criteria, while reports issued prior to this date may be in compliance with this criteria or with the previous edition. If the criteria is an updated version from the previous edition, a solid vertical line (**I**) in the margin within the criteria indicates a technical change, addition, or deletion from the previous edition. A deletion indicator (→) is provided in the margin where a paragraph has been deleted if the deletion involved a technical change. This criteria may be further revised as the need dictates.

ICC-ES may consider alternate criteria, provided the report applicant submits valid data demonstrating that the alternate criteria are at least equivalent to the criteria set forth in this document, and otherwise demonstrate compliance with the performance features of the codes. Notwithstanding that a product, material, or type or method of construction meets the requirements of the criteria set forth in this document, or that it can be demonstrated that valid alternate criteria are equivalent to the criteria in this document and otherwise demonstrate compliance with the performance features of the codes, ICC-ES retains the right to refuse to issue or renew an evaluation report, if the product, material, or type or method of construction is such that either unusual care with its installation or use must be exercised for satisfactory performance, or if malfunctioning is apt to cause unreasonable property damage or personal injury or sickness relative to the benefits to be achieved by the use of the product, material, or type or method of construction.

www.icc-es.org

Business/Regional Office ■ 5360 Workman Mill Road, Whittier, California 90601 ■ (562) 699-0543
Regional Office ■ 900 Montclair Road, Suite A, Birmingham, Alabama 35213 ■ (205) 599-9800
Regional Office ■ 4051 West Flossmoor Road, Country Club Hills, Illinois 60478 ■ (708) 799-2305

ACCEPTANCE CRITERIA FOR SANDWICH PANELS

1.0 INTRODUCTION

The purpose of this criteria is to provide a procedure for recognition of sandwich panels in ICC Evaluation Service, Inc., (ICC-ES) evaluation reports under the 2003 *International Building Code®* (IBC), the 2003 *International Residential Code®* (IRC), the BOCA® *National Building Code*/1999 (BNBC), the 1999 *Standard Building Code©* (SBC) and the 1997 *Uniform Building Code™* (UBC). Bases of recognition are IBC Section 104.11, IRC Section R104.11, BNBC Section 106.4, SBC Section 103.7 and UBC Section 104.2.8. This criteria is general in nature and is applicable to all sandwich panels except where other current ICC-ES acceptance criteria are applicable to specific configurations or compositions of panels.

1.1 Panel Justification Options:

1.1.1 Panels may be justified by load tests as described in Section 4. Justification by this method limits their use to sizes and materials used in the tests. Allowable loads determined may be used for shorter spans or heights but extrapolation is not permitted.

1.1.2 Panels may be justified by a rational analysis based on allowable stresses developed as described in Section 5.

1.2 Testing Laboratories, Reports of Tests and Sampling of Specimens:

1.2.1 Testing Laboratories: Testing laboratories shall comply with the ICC-ES Acceptance Criteria for Test Reports (AC85) and Section 4.2 of the ICC-ES Rules of Procedure for Evaluation Reports.

1.2.2 Test Reports: Test reports shall comply with AC85.

1.2.3 Specimens shall be representative of standard manufacture in conformance with the minimum requirements of the quality control manual addressed in Section 8 of this criteria. The specimens shall be sampled in accordance with Section 3.1 of AC85.

1.3 Factors of Safety:

1.3.1 Factors of safety are set forth in subsequent sections and are based on the materials involved, test procedure, panel deformation and variation of results.

1.3.2 Allowable values developed under Section 1.3.1 are not subject to increase due to duration of loading unless specifically allowed. This includes wind and seismic loads.

1.3.3 Where loading conditions result in several modes of superimposed stressing, the sum of the ratios of actual loads over allowable loads shall not exceed one. Transverse wind loads on a bearing wall is one example requiring this consideration.

1.4 Supplementary Information: Supplementary information may be included in the evaluation report, provided it is justified and relates to the IBC, IRC, BNBC, SBC, or UBC. This includes sound transmission insulation as specified in IBC Section 1207, IRC Appendix K, BNBC Section 1214.0 and Division II of UBC Appendix Chapter 12, and thermal transmission data. Recognition of fire-resistive assemblies requires reports of tests in compliance with Chapter 7 of the IBC, BNBC, SBC and UBC, and IRC Chapter 3.

1.5 Referenced Documents: Where standards are referenced in this criteria, the standards shall be applied consistently with the code (IBC, IRC, BNBC, SBC, or UBC) upon which compliance of the sandwich panels is based. Editions of the standards applicable to each code are summarized in Table 1.

1.5.1 American Society for Testing and Materials (ASTM):

1.5.1.1 ASTM C 271, Test Method for Density of Core Materials for Structural Sandwich Constructions.

1.5.1.2 ASTM C 272, Test Method for Water Absorption of Core Materials for Structural Sandwich Constructions.

1.5.1.3 ASTM C 297, Method for Tension Test of Flat Sandwich Constructions in Flatwise Plane.

1.5.1.4 ASTM C 365, Test Methods for Flatwise Compressive Strength of Sandwich Cores.

1.5.1.5 ASTM C 393, Method for Flexural Test of Flat Sandwich Constructions.

1.5.1.6 ASTM C 481, Test Method for Laboratory Aging of Sandwich Constructions.

1.5.1.7 ASTM D 1037, Method for Evaluating the Properties of Wood-Base Fiber and Particle Panel Materials.

1.5.1.8 ASTM D 2559, Specification for Adhesives for Structural Laminated Wood Products for Use Under Exterior (Wet Use) Exposure Conditions.

1.5.1.9 ASTM E 72, Method of Conducting Strength Tests of Panels for Building Construction.

1.5.1.10 ASTM E 84, Test Method for Surface Burning Characteristics of Building Materials.

1.5.1.11 ASTM E 661, Test Method for Performance of Wood and Wood-Based Floor and Roof Sheathing Under Concentrated Static and Impact Loads.

1.5.1.12 ASTM E 2126, Test Methods for Cyclic (Reversed) Load Test for Shear Resistance of Framed Walls for Buildings.

1.5.2 2003 *International Building Code®* (IBC), International Code Council.

1.5.3 2003 *International Residential Code™* (IRC), International Code Council.

1.5.4 BOCA® *National Building Code*/1999 (BNBC).

1.5.5 1999 *Standard Building Code©* (SBC).

1.5.6 1997 *Uniform Building Code™* (UBC).

2.0 PANEL DESCRIPTION

The panel description is to include the following information:

2.1 Dimensions: Thickness, width and length for each panel type.

2.2 Panel-facing Material:

2.2.1 The material shall be acceptable under a current ICC-ES evaluation report, a recognized product standard the

IBC, IRC, BNBC, SBC, or UBC, or be justified to the satisfaction of the ICC-ES. The material shall be clearly identified to determine compliance.

2.2.2 Exterior panel facings that remain exposed on weather-exposed surfaces, as defined in UBC Section 224, IBC Section 2502 and IRC Section R703, shall be justified to the satisfaction of ICC-ES for this use.

2.2.3 Panel facings subject to axial or racking shear loads shall have approved values for fasteners. Where no values are recognized by the ICC-ES, fastener tests shall be conducted for both shear and fastener pull-through at the minimum edge distances contemplated. Allowable values for fasteners may control allowable panel loads, when they are more restrictive than the panel test values. Specimens shall be conditioned and, where skins are subject to wetting, shall be additionally tested in that manner. Sections 41 through 67 of ASTM D 1037 serve as a guide for test procedures, which shall have ICC-ES concurrence prior to testing.

2.2.4 Panel facings exposed to the building interior shall have flame-spread and smoke-density ratings as specified in IBC Section 803.1, IRC Section R319 BNBC Section 803.2, SBC Section 803.2, and UBC Section 802.2. Plastic materials shall be approved plastics as set forth in IBC Sections 2602.1 and 2606.4 for use under the IBC or IRC; BNBC Sections 2601.2 and 2604.1 for use under the BNBC; SBC Section 202 for use under the SBC; and UBC Section 217 for use under the UBC. When these characteristics are affected by the core material of the panel, the combined section shall be tested when deemed necessary by the ICC-ES.

2.2.5 Wood-based sheathing facings of sandwich panels shall be protected against decay and termites in accordance with IBC Sections 2304.11.2.2 and 2304.11.2.5, IRC Sections R319 and R320, BNBC Section 2311.4.2, SBC Section 2304, and UBC Section 2306.8, as applicable.

2.3 Panel Cores:

2.3.1 Honeycomb specifications are to include a detailed description or illustration noting the thickness, cell size, kraft paper weight or metal thickness, direction of the paper or metal ribbon, percent impregnation of materials, etc.

2.3.2 Foam plastic specifications are to include the density, thickness, whether it is preformed slab, frothed or expanded, foam manufacturer and the type, catalog number, etc. The position of the panel during the frothing or pouring operation is to be specified.

2.3.3 Other core materials with specifications and descriptions will be considered.

2.3.4 When the core material does not completely fill the portion between panel facings, voids shall be detailed or properly described. Voids formed by honeycomb cells are not regulated by this subsection. The method used to maintain voids during foaming or bonding shall be described.

2.3.5 Core materials classified as noncombustible shall be justified under IBC Section 703.4, IRC Section R202, BNBC Section 704.4, SBC Section 202, and UBC Section 215, as applicable. Combustible core materials, except foam plastic, shall have a minimum Class III flame-spread classification not exceeding 200 and smoke-density rating not exceeding 450 when tested under ASTM E 84 for use under the IBC, IRC, BNBC, and SBC; and UBC Standard 8-1 for use under the UBC; in the thickness intended for use. Foam plastic cores shall comply with IBC Sections 2602.1 and 2603 and IRC Section R318 and the ICC-ES Acceptance Criteria for Foam Plastic Insulation (AC12).

2.4 Adhesives: Any adhesives used shall comply with ASTM D 2559 or the ICC-ES Acceptance Criteria for Sandwich Panel Adhesives (AC05). Adhesive specifications are to include the type, class, thickness of application, number of coats and assembly instructions, etc. Panel cores that are factory poured or frothed between panel facings and self adhere to panel facings shall comply with appropriate sections of the ICC-ES Acceptance Criteria for Sandwich Panel Adhesives (AC05).

Exception: Cores that self-adhere to panel facings of panels limited to use as nonbearing walls or roofs with a maximum allowable uniform live load of 20 psf (958 Pa) do not need to be tested in accordance with AC05 provided the panel manufacturer certifies the core's adhesive bond durability based on satisfactory field performance.

2.5 Panel Plates and Splines: Wood plates, splines, studs, blocking, etc., are to have wood species, grades, preservative treatments and maximum moisture contents at time of panel manufacture specified. Lumber shall be stress graded or stress-rated material. Lumber bonded to panel facings with adhesives shall have a moisture content not in excess of that recommended by the adhesive manufacturer, between 7 and 16 percent, or not exceeding a difference of 5 percent between the two materials bonded, whichever is more restrictive. Complete cross-sectional properties of the members are required.

2.6 Connections: Connections shall be detailed or adequately described. Fasteners shall be properly specified, including size, length and location.

2.7 Door and Window Openings: Details for door and window openings shall be provided to clarify the manner of supporting axial, transverse and/or racking shear loads. This includes the method of resisting wind loads at door and window jambs.

3.0 MISCELLANEOUS PANEL INFORMATION

3.1 Substitutions: No substitution of materials is allowed unless permitted by ICC-ES.

3.2 Field-cutting of Panels: Field-cutting of wall openings is not allowed unless specific openings or design parameters are permitted by ICC-ES.

3.3 Load Tests on Entire Structures: Test loads and manner of application to full structures shall be specified by the ICC-ES when design parameters for the full structure cannot be readily determined by accepted engineering principles.

3.4 Wall Panel Facings: Wall panel facings shall have sufficient strength to resist concentrated loads and prevent damage on the core material under loads to which they may be subjected.

3.5 Plumbing Installation Restrictions: Plumbing and waste lines may extend at right angles through the wall panels but are not permitted vertically within the core. Lines shall not interrupt splines or panel plates unless specifically permitted by ICC-ES.

3.6 Electrical Installation Restrictions: Electrical outlet boxes and raceways may be installed in the panels during fabrication at predetermined locations only. Electrical systems are limited to a single 1-inch (25.4 mm) maximum (outside diameter) vertical raceway at a minimum of 4 feet (1219 mm) on center, which is shop-installed with no more than three outlet box openings 4 inches by 4 inches (102 mm by 102 mm) in size. Two $^1/_2$-inch (12.7 mm) vertical raceways may be substituted for the single 1-inch (25.4 mm) raceway, provided they are maintained parallel and within 2 inches (51 mm) of each other.

3.6.1 Voids other than those specified in Section 3.6 will be permitted for field or shop installation of electrical wiring, provided the voids were in the panels tested. See Section 3.2 for field cut openings.

3.6.2 Where electrical raceways interrupt or reduce the cross section of wall plates, a method of strengthening the plate at that point for both lateral and plate axial loads shall be developed, detailed and submitted for evaluation.

3.7 Flashing: Flashing and other weatherproofing details are required for panel joints, wall openings, etc.

4.0 PANEL LOAD TEST OPTION

4.1 Purpose: In lieu of determining structural and mechanical properties of panel components for rational design purposes under Section 5, load tests may be conducted to determine reasonable ultimate values to which factors of safety are applied. Tests unrelated to the intended use of the panels are unnecessary. As an example, only tests under Section 4.3, Wall Panels Transverse Load Tests, are needed for panels used on exterior, nonbearing, nonshear curtain walls.

4.2 General:

4.2.1 The tests are to be conducted as set forth in Section 1.2.

4.2.2 Three tests of each type are required with none of the results varying more than 15 percent from the average of the three, unless the lowest test value is used. The average result based on a minimum of five tests may be used regardless of the variations. The results of two tests may be used when the higher value does not exceed the lower value by more than 5 percent and the lower value is used with the required factors of safety.

4.2.3 Where tests are not conducted to failure, the highest load achieved for each test will be assumed as ultimate.

4.2.4 Factors of safety are dependent on the consistency of materials, the range of test results and the load deformation characteristics of the panel. Generally a minimum factor of safety of three is applied to the ultimate load based on the average of three tests. Lower factors of safety may be assigned to panels or systems employing steel or aluminum having consistent physical properties.

For patio cover roof panels limited to recognition under IBC Appendix Chapter I, or IRC Appendix Chapter H, or Division III of UBC Appendix Chapter 31, and consisting of metal facings and foam plastic cores, either factory-adhered or foamed-in-place, the following factors of safety are applicable to uniform transverse loads:

F.S. = 2.0, ultimate load determined by bending (facing buckling) failure for allowable live loads up to 20 psf (958 Pa) and wind loads.

F.S. = 2.5, ultimate load determined by bending (facing buckling) failure for allowable snow loads.

F.S. = 2.5, ultimate reaction at failure for all loading conditions.

F.S. = 3.0, ultimate load at shear failure for all loading conditions.

4.2.5 Allowable loads will be limited by established fastener values except as noted in Section 4.4.2 or deflection limitations if lower than values from panel loading tests.

4.2.6 Splines or stiffeners, when utilized along the edges of the panel tests, shall be only that portion of the typical construction relative to the panel being tested and not supplemented by adjacent panel spline areas.

4.2.7 Unless otherwise noted in this criteria, load tests shall be conducted with panel support conditions as specified in ASTM E 72. The effects of field installation conditions of panels shall be evaluated to determine if the panel's support conditions adversely affect the panel's performance.

4.3 Wall Panel Transverse Load Tests:

4.3.1 With the design load imposed, exterior wall panel deflections shall not exceed the deflection limits of IBC Table 1604.3 for use under the IBC or IRC, or exceed L/180 for use under the BNBC, SBC, and UBC. Positive and negative pressure conditions shall be considered. Wall panels with different facing materials on opposite faces shall be tested for loads acting both inwardly and outwardly where there is a question of the most critical direction.

4.3.2 With a 5-pound-per-square-foot (239 Pa) horizontal loading imposed, interior wall panel deflections shall not exceed L/120 of the span for flexible facing material such as metal, plywood, particleboard and gypsum wallboard. A deflection limitation of L/240 of the span is required for brittle facing materials such as plaster.

4.3.3 All wall panels shall be loaded in increments to failure with deflections taken to obtain deflection and set characteristics. Application of load and duration of load application shall be in accordance with Sections 4.2 and 4.3 of ASTM E 72. Where preloading is applied, the loading, deflection and recovery shall be noted. The amount of preloading shall not exceed 10 percent of the final allowable load unless permitted by the ICC-ES.

4.3.4 As an alternate to limiting the allowable loads for shorter spans to loads determined from one test series as described in Section 1.1.1, additional full-scale testing shall include the maximum and minimum panel spans intended for recognition. No extrapolation beyond these spans or corresponding loads will be permitted.

4.3.5 Variations in facing thickness will require additional full-scale testing. Thicknesses tested shall "envelope" the range desired with interpolation of results between tested values.

4.3.6 Variation in panel strength and stiffness due to the effects of the pour direction of poured/foamed-in-place foam plastic cores will require additional full-scale testing.

4.3.7 Multiple-span full-scale testing will be required if recognition of multiple spans is desired.

4.3.8 The "bag method," vacuum chamber or a uniform loading of known unit weights shall be used.

4.3.9 Transverse load tests on panels having window or door openings are required unless subject to rational analysis. Load application shall be done in a manner that reflects field loading conditions.

4.3.10 Deflection readings are to be taken at mid-span, within 3 inches (76 mm) of each edge and at the center of the panel width. For panel widths less than 24 inches (610 mm), the edge readings shall be taken at a distance from each panel edge not more than ten percent of the panel's width. Panels tested over a double span are to have the same three deflection readings taken at the expected maximum deflection point based on analysis.

4.4 Wall Panel Axial Load Tests:

4.4.1 Load-bearing wall panels shall support an axial loading applied with an eccentricity of one-sixth the panel thickness to the interior or towards the weaker facing material of an interior panel. The test setup shall be capable of accommodating rotation of the test specimen at the top of the wall due to out-of-plane deflection with the load applied throughout the duration of the test with the required eccentricity.

4.4.2 The allowable axial load is determined from the axial load at a net axial deformation of 0.125 inch (3.18 mm) or the ultimate load divided by a factor of safety determined in accordance with Section 4.2.4, whichever is lower. In addition, loads transferred by fasteners shall not exceed established fastener values.

4.4.3 The test panel shall have wall sill and cap plate details with connections matching the proposed field installation. Axial loads shall be applied uniformly or at the anticipated spacing of the floor or roof framing.

4.4.4 For panels that are field installed without bearing on the full panel thickness, the bottom edges of the panel facing material shall be held at least $^3/_4$ inch (19.1 mm) above the base of the sill plate to ensure no direct bearing of the facings against test equipment framing. Panels may be inverted during testing if desired to meet the above loading requirements. If, due to deflection, the $^3/_4$-inch (19.1 mm) panel base clearance is dissipated, the load at this point shall be specified.

4.4.5 Lintel sections shall meet the deflection criteria of IBC Section 1604.3.6 for use under the IBC and IRC, and BNBC Section 1604.5, SBC Section 1610, and UBC Section 1613, as applicable.

4.4.6 All wall panels shall be loaded in increments to failure with deflections taken to obtain deflection and set characteristics. Application of load and duration of load application shall be in accordance with Sections 4.2 and 4.3 of ASTM E 72. Where preloading is applied, the loading, deflection and recovery shall be noted. The amount of preloading shall not exceed 10 percent of the final allowable load unless permitted by the ICC-ES.

4.5 Wall Panel Racking Shear Tests:

4.5.1 Racking shear tests in accordance with ASTM E 72, as amended by this criteria, are required for shear walls that resist wind and seismic loads. For use under the IBC, shearwalls of sandwich panels are limited to Seismic Design Categories A, B and C.

Exception: When tested in accordance with the requirements set forth in Appendix A, shearwalls of sandwich panels are permitted to be used in all IBC Seismic Design Categories. Appendix B provides an example of the application of Appendix A.

4.5.2 The allowable shear load is determined from the racking load at which a net horizontal deflection of $^1/_2$ inch (12.7 mm) occurs, the ultimate load divided by a factor of safety determined in accordance with Section 4.2.4, or the allowable fastener loads, whichever is the lower. The test panel shall be constructed and installed as intended in the field, including connections. Reference is also made to Section 4.2.6 of this criteria.

Hold-down rods may be used provided allowable net horizontal deflections are reduced to $^1/_8$ inch (3.18 mm).

4.5.3 The "stop" detailed in the ASTM E 72 procedure for installation against the toe of the test panel shall be located in such a manner that reactive forces are imposed against the end of the sill plate and clear of the panel spline and facing material.

4.5.4 The bottom edges of the panel facing material shall be held at least $^3/_4$ inch (19.1 mm) above the base of the sill plate to ensure against direct vertical bearing or frictional shear resistance of the facings against test equipment framing. The testing laboratory shall indicate the load at which the $^3/_4$-inch (19.1 mm) panel base clearance from the test frame is dissipated.

4.5.5 The panel top horizontal timber suggested for the test panel in the ASTM E 72 sketch shall not be used. The racking shear load should be applied directly against the typical wall panel top plate member or members that duplicate actual field construction unless otherwise permitted.

4.5.6 All wall panels shall be loaded in increments to failure with deflections taken to obtain deflection and set characteristics. Where preloading is applied, the loading, deflection and recovery shall be noted. The amount of preloading shall not exceed 10 percent of the final allowable load unless permitted by the ICC-ES.

4.6 Roof and Floor Panels:

4.6.1 Uniform Loads:

4.6.1.1 Allowable loads for roof and floor panels shall be based on the following:

4.6.1.1.1 Allowable loads determined under Sections 4.2.2 through 4.2.7.

4.6.1.1.2 Except for patio cover roof panels with metal facings, panels shall comply with the deflection requirements in IBC Table 1604.3 for use under the IBC and IRC, and BNBC Section 1604.5, SBC Section 1610, and UBC Table 16-D, as applicable. Additionally, roof panels used under the UBC, other than patio cover roof panels with metal facings, shall be limited to a maximum deflection of the span divided by 180 when subjected to roof live load or snow load, whichever governs. Patio cover roof panels with metal facings shall be limited to a total gravity load deflection of the span divided by 120. Patio cover roof

panels with metal facings shall be limited to a total wind uplift load deflection of the span divided by 60.

4.6.1.1.3 For roof panels, water accumulation or water ponding shall be addressed in accordance with IBC Section 1611.2 under the IBC and IRC, BNBC Section 1607.5, footnote 3 to SBC Table 1610.1, and UBC Section 1611.7, as applicable.

4.6.1.2 Deflection readings are to be taken at mid-span, within three inches (76 mm) of each edge and at the center of the panel width. For panel widths less than 24 inches (610 mm), the edge readings shall be taken at a distance from each panel edge not more than ten percent of the panel's width. Panels tested over a double span are to have the same three deflection readings taken at the expected maximum deflection point based on analysis.

4.6.1.3 Roof panels having different facing materials on the same panel are to be tested so each facing material will be in compression and tension. Floor panels or panels tested on a two-span condition need not be tested in both directions.

4.6.1.4 The "bag method," vacuum chamber or a uniform loading of known unit weights shall be used for transverse tests.

4.6.1.5 Application of load and duration of load application shall be in accordance with Sections 4.2 and 4.3 of ASTM E 72.

4.6.2 Concentrated Load Tests:

4.6.2.1 Facings of roof and floor panels shall be capable of supporting, without failure, a 300-pound (1334 N) concentrated load applied to a 3-inch-diameter (76 mm) disc. A minimum of three tests shall be conducted for each facing and core combination. Tests shall be conducted in accordance with ASTM E 661.

4.6.2.2 Concentrated load tests for floor panels are necessary for loads specified in IBC Section 1607.4 for use under the IBC or IRC, BNBC Section 1606.3, SBC Section 1604.3, and UBC Section 1607.3.3, as applicable.

4.6.2.2.1 Allowable loads for floor panels are determined under Sections 4.2.2 to 4.2.7. Panels shall comply with the deflection requirements in IBC Table 1604.3 for use under the IBC or IRC, and BNBC Section 1604.5, SBC Section 1610, and UBC Table 16-D, as applicable.

4.6.2.2.2 Deflection readings are taken at mid-span at each edge and the panel center. Panels tested over a double span shall have the same three deflection readings taken at the expected maximum deflection point based on analysis.

4.7 Density–Water Absorption Tests—Foamed Plastic Core Material:

4.7.1 The density and water absorption characteristics of foamed-in-place cores are to be determined from the load test panels after completion of tests. The test procedure in ASTM C 272 is to be utilized with the following revisions:

4.7.2 The conditioning temperature in Section 4.1.1 of ASTM C 272 is to be increased to 158°F. ± 5°F (70°C ± 2.8°C), in lieu of the specified 122°F (50°C).

4.7.3 Representative specimens shall be taken from panels that have been adequately cured. The report shall specify curing procedures. Panels indicating obvious discrepancies in load test results due to insufficient curing shall not be used.

4.7.4 Six specimens shall be taken from a representative panel of each set subjected to the transverse loading test.

4.7.5 The density–water absorption specimens are to be obtained as follows, assuming a 4-by-8-foot (1219 by 2438 mm) panel. The previously tested full-size solid panels are cut across the 4-foot (1219 mm) dimension 4 to 8 inches (102 to 203 mm) from each end and then longitudinally down the middle of the remaining center portion. Three-inch-square (76 mm) samples are cut from each outside quarter point of the end sections and one sample cut from each of the two remaining center portions, totaling six samples from each panel. The samples are to be cut a minimum of 1 inch (25.4 mm) away from any splines. A sketch is to be included in the laboratory report locating and numbering the position of each specimen.

4.7.6 The 3-inch-square (76 mm) samples are cut to maintain the entire panel thickness, including facings. The volumetric dimensions are measured "as received" and after removal of facings in accordance with Section 3 of ASTM C 272. The density and water absorption tests are conducted in accordance with ASTM C 272 with the facings removed. Care shall be taken to assure that a minimal core material is removed. Dimensions are taken after the first oven curing and after each conditioning of the absorption tests. After the final oven drying, the specimen dimensions are recorded.

4.7.7 The two-hour immersion linear measurement required by ASTM C 272 may be omitted.

4.7.8 Foam density variations for the different sample locations may not vary by more than 25 percent from any other samples taken from the same panel based on the lower value of the two being compared.

4.7.9 Subsequent density–water absorption tests in conjunction with quality control shall follow the same test procedure as used initially to assure the validity of comparing results.

4.8 Density Tests—Preformed Foamed Plastic Core Material: Panels having preformed foam cores bonded in place with an adhesive are to have density tests conducted in accordance with ASTM C 271. Two samples are to be cut from one of each set of panels subjected to the axial, transverse loading and racking shear tests, respectively. The samples are to have the facing material removed, together with any adhesive impregnated core material prior to the density determination. The average density values are to be based on a minimum of six samples. Panels with window and door openings are to have their cores treated in a similar manner.

4.9 Tests for Other Than Foam Plastic Cores: Density, shear and other tests for other than foamed plastic cores shall be determined by the ICC-ES.

4.10 Coefficient of Expansion for Core and Facings: Substantial differences in coefficient of expansion between core and facing materials require justification that this will not be detrimental to the panel integrity. Testing under ASTM C 393 after aging under Cycle B, ASTM C 481 shall be considered sufficient to determine this quality. Heated dry

air shall be increased to 182° F. + 2° F. (83.3°C + 1.14°C) in Cycle B.

4.11 Temperature Differentials on Panel Facings: Substantial differences in temperature between facings of a panel with high coefficients of expansion require justification that this will not be detrimental to the panel integrity.

5.0 PANEL ANALYSIS OPTION

5.1 Purpose: To provide flexibility in panel size with minimal uniform transverse and axial load testing of full-scale panels, the characteristics and allowable stresses for each material used in the panels may be determined to permit a rational analysis. Supplemental uniform transverse and axial load tests on actual panels in accordance with Section 5.6 will be necessary only to verify design assumptions and criteria.

5.2 Facing Material: Each facing material, unless allowable working stresses are established in the IBC, IRC, BNBC, SBC, or UBC are acceptable to ICC-ES is to have the following characteristics determined by representative tests (waiver of any of the characteristics shall be with the concurrence of ICC-ES):

5.2.1 Modulus of elasticity (bending).

5.2.2 Tension parallel to surface.

5.2.3 Tension perpendicular to surface.

5.2.4 Modulus of rupture.

5.2.5 Compression parallel to surface.

5.2.6 Shear parallel to surface.

5.2.7 Density.

5.2.8 Shear modulus.

5.2.9 Fastener values in shear and, where applicable, nail- or screw-head pull-through for each facing material as set forth in Section 2.2.3.

5.3 Core Materials: Panel cores shall have the following characteristics established:

5.3.1 Modulus of elasticity (bending).

5.3.2 Tension perpendicular to surface.

5.3.3 Compression perpendicular to surface.

5.3.4 Shear parallel to surface.

5.3.5 Shear modulus (in each direction for honeycomb and foam materials).

5.3.6 Density for foam plastic and related products, core size, weight and degree of impregnation for paper honeycomb or the standard identification specification for aluminum or light-gauge steel honeycomb.

5.4 Material Tests: Tests to determine the facing and core characteristics are as follows:

5.4.1 Tension—ASTM C 297 for core material, and ASTM D 1037, Sections 21 to 33, for facing material.

5.4.2 Compression—ASTM D 1037, Sections 34 to 40, Procedure B, for facing materials.

5.4.3 Shear and Shear Modulus—ASTM C 273 for core and facing material by tension tests.

5.4.4 Modulus of Rupture—ASTM C 393 for evaluation of facing materials in sandwich construction.

5.4.5 Density—Section 4.7 for frothed or poured-in-place foams, and ASTM C 271 for slab-type foams bonded in place in the panels.

5.4.6 Modulus of Elasticity—ASTM C 393, for facing materials in sandwich construction.

5.4.7 Fastener Values—ASTM D 1037, Sections 41 to 67.

5.4.8 Compression—ASTM C 365, Method "B," for core material.

5.5 Adhesives: Adhesives are to comply with ASTM D 2559 or the ICC-ES Acceptance Criteria for Sandwich Panel Adhesives (AC05).

5.6 Confirmatory Testing: Uniform transverse and axial load tests in accordance with Sections 4.2, 4.3, 4.4 and 4.6.1 shall be conducted on full-scale panels to confirm the design procedures. Axial load tests are not required for nonload-bearing panels. Density and water absorption tests in conformance with Section 4.7 are required for foamed plastics.

5.7 Racking Shear Tests: Racking shear tests in accordance with Sections 4.2 and 4.5 are required for shear walls that resist wind and seismic forces. Density and water absorption tests on six specimens from one panel in conformance with Section 4.7 are required for foamed plastics.

5.8 Concentrated Load Tests: Concentrated load tests of floor and roof panels shall be conducted in accordance with Section 4.6.2.

5.9 Coefficient of Expansion for Core and Facings: Coefficient of expansion of core and facing materials shall be investigated as noted in Sections 4.10 and 4.11.

6.0 ADDITIONAL FABRICATOR QUALIFICATION PROCEDURES

The following procedures are necessary for recognition of supplementary fabricating facilities.

6.1 A qualified representative of a recognized testing agency shall select at least three panels at random of each panel type. The panels are to be permanently identified by the laboratory personnel and shipped to the testing laboratory facility.

6.2 Each of the three panels selected shall be subjected to a transverse load test in accordance with Section 4.3 or Section 4.6.1. The individual test results and the average of the test results shall be no lower than 85 and 90 percent, respectively, of the average original plant transverse test results.

6.3 For foamed-in-place cores, one panel is to be selected for each panel type and six density-water absorption specimens cut from the panel and tested in accordance with Sections 4.7 and 4.8. The density–water absorption test average shall be no lower than 90 percent of the original plant test average nor shall any specimen vary more than 25 percent in density from any other sample taken from the same panel, based on the lowest value.

6.4 The preformed core panel density shall agree with the original core density.

7.0 PANEL IDENTIFICATION

Panels shall bear the company name and address, evaluation report number and other information deemed necessary by the ICC-ES. The identification shall be visible after the panels are erected. Exterior panels shall have the exterior face clearly identified. Panels with foam plastic cores used on noncombustible exterior walls under IBC Section 2603.5, BNBC Section 2603.6, SBC Section 2603.6, or UBC Section 2602.5.2.2 shall be labeled in accordance with IBC Section 2603.5.6, BNBC Section 2603.6.7, SBC Section 2603.6.6, or Item 6 of UBC Section 2602.5.2.2, respectively.

8.0 QUALITY CONTROL

8.1 The products shall be manufactured under an approved quality control program with inspections by an inspection agency accredited by the International Accreditation Service (IAS) or as otherwise acceptable to ICC-ES.

Exception: Quality control inspections by an ICC-ES accredited quality control agency are not required for nonbearing, noncombustible interior panels complying with requirements of IBC Section 1607.13, BNBC Section 1606.9, SBC Section 1604.5, and UBC Section 1611.5 , as applicable, provided recognition is limited to a maximum of 5 pounds per square foot (239 Pa) design load applied perpendicular to the panels.

8.2 A quality control manual complying with the ICC-ES Acceptance Criteria for Quality Control Manuals (AC10) shall be submitted.

9.0 CHANGES IN MATERIAL SOURCES

When deemed necessary by ICC-ES, the following procedures are necessary for continued recognition if the source for the panel component materials changes:

9.1 A qualified representative of an ICC-ES accredited testing agency shall select at least six panels, at random, of each panel type. Additional panels need to be selected if the panels are used as load-bearing or shear walls.

9.2 Two groups of three selected panels shall be subjected to transverse load tests in accordance with Section 4.3 or 4.6.1. One group of three specimens shall be tested with a long span to test for moment capacity and stiffness. The second group of three specimens shall be tested with a short span to test for shear capacity. The individual test results and the average of the test results of each group shall be no lower than 85 and 90 percent, respectively, of the average of the original production transverse test results.

9.3 Where the panels are used as load-bearing walls, three panels shall be subjected to axial load tests in accordance with Section 4.4. The individual test results and the average of the test results shall be no lower than 85 and 90 percent, respectively, of the average of the original production axial load test results.

9.4 Where the panels are used as shear walls, racking shear tests of three assemblies of panels shall be conducted in accordance with Section 4.5. The individual test results and average of the test results shall be no lower than 85 and 90 percent, respectively, of the average of the original production racking shear test results.

9.5 Density and water absorption tests in conformance with Section 4.7 are required for foam plastics.

9.6 Alternative panel facing materials, cores and adhesives shall comply with Sections 2.2, 2.3 and 2.4, respectively.

9.7 The sandwich panel quality control manual shall be revised to specify the alternative material source.■

TABLE 1—CROSS REFERENCE OF STANDARDS EDITIONS

STANDARD	2003 IBC	2003 IRC	1999 BNBC	1999 SBC	1997 UBC
ASTM C 271	-61 (1980)	-61 (1980)	-61 (1980)	-61 (1980)	-61 (1980)
ASTM C 272	-53 (1980)	-53 (1980)	-53 (1980)	-53 (1980)	-53 (1980)
ASTM C 297	-61 (1980)	-61 (1980)	-61 (1980)	-61 (1980)	-61 (1980)
ASTM C 365	-57 (1980)	-57 (1980)	-57 (1980)	-57 (1980)	-57 (1980)
ASTM C 393	-62 (1980)	-62 (1980)	-62 (1980)	-62 (1980)	-62 (1980)
ASTM C 481	-62 (1980)	-62 (1980)	-62 (1980)	-62 (1980)	-62 (1980)
ASTM D 1037	-78	-78	-78	-78	-78
ASTM D 2559	-92	-92	-92	-92	-92
ASTM E 72	-98	-98	-98	-80	-80
ASTM E 84	-01	-01	-98[c1]	-95	UBC Std. 8-1
ASTM E 661	-88	-88	-88	-88	-88

APPENDIX A—OPTIONAL CYCLIC-LOAD TEST REQUIREMENTS FOR SIP SANDWICH PANELS

A.1.0 INTRODUCTION

A.1.1 Purpose: The purpose of this appendix is to establish requirements for permitting the use of Structural Insulated Panels (SIP) in Seismic Design Categories D, E, and F. These requirements are optional.

A.1.2 Scope: This appendix is limited to Structural Insulated Panels (SIP) as defined in Section A.1.3.5. Other types of sandwich panels are beyond the scope of Appendix A. This appendix is not intended to determine design capacities; the response modification coefficient, R; the system over-strength factor, Ω_o; or the deflection amplification factor, C_d for an SIP assembly; rather, it is intended to illustrate that the SIP assemblies, with and without sealants, perform similarly, in terms of cyclic performance, to light-frame walls with wood-based structural panels. Extrapolation of test results to other SIP assemblies is not permitted. Interpolation of test results is permitted if mechanical fastener schedule is the only variable that is under consideration.

A.1.3 Definitions: The definitions in this appendix may be unique and are intended to apply to this appendix only.

A.1.3.1 Adhesive: In addition to meeting requirements of Section 2.4 of AC04, adhesives shall be limited to laminating the foam core to the oriented strand board (OSB) or plywood structural facers.

A.1.3.2 Backbone Curve: The locus of extremities of the load-displacement hysteresis loops. It represents the peak loads from the first cycle of each phase of the cyclic loading.

A.1.3.3 Matched Light-Framed-Wall Assembly: A matched light-framed-wall assembly is fabricated with wood framing meeting IBC Section 2303.1.1. The number and size of nails connecting wood framing members shall be as set forth in IBC Table 2304.9.1. The walls shall be sheathed on both sides with wood-based structural panels from the same manufacturing lot that is used to fabricate the SIP assemblies. The matched light-framed wall assemblies shall have identical fastener size and type, wall boundary details, and tie down details for overturning restraint as the SIP assemblies. Sealant shall not be used for the light-framed wall assemblies. The perimeter of the wall sheathing panels shall be attached with the same total number of fasteners as is used in the perimeter of the SIP panels.

A.1.3.4 Sealant: A sealant that is used at the interface between SIP and the wall perimeter members as well as the SIP-to-SIP interfaces. The sealant is typically used to minimize air movement through completed structure. The specification for the sealant used in the matched light-framed-wall assembly per Section A.1.3.3 shall be documented.

A.1.3.5 Structural Insulated Panels (SIP): Structural insulated panels (SIP) are factory-laminated sandwich panels consisting of solid-core insulation adhesively attached to structural skins of oriented strand board (OSB) or plywood. The structural wood-based skins shall be attached with mechanical fasteners to wood members at the perimeters of the panels and wood or wood based splines.

A.1.3.6 SIP Assembly (with sealants): A SIP assembly is a wall assembly consisting of two or more structural insulated panels assembled using the report applicant's end use recommendations. The end use recommendations include, but are not limited to, fastener size and type, fastener schedule, method for SIP-to-SIP interconnection, wall boundary details, tie down details for overturning restraint, and application of sealants.

A.1.3.7 SIP Assembly (without sealants): Same as SIP Assembly with sealant, except the sealant is excluded.

A.2.0 TEST REQUIREMENTS

A.2.1 Cyclic Testing of SIP Wall Assemblies: SIP wall assemblies shall be cyclically tested in accordance with the *Standard Method of Cyclic (Reversed) Test for Shear Resistance of Framed Walls for Buildings,* by the Structural Engineers Association of Southern California (SEAOSC), dated August 1, 1996 (revised January 20, 1997), with the following modifications to the SEAOSC document:

A.2.1.1 Sections 1.3 and 5.2 of SEAOSC are deleted.

A.2.1.2 Section 5.3 of SEAOSC is supplemented by the following statement: Minimum wall assembly size shall be 8 feet (2438 mm) tall by 8 feet (2438 mm) wide.

A.2.1.3 Section 7.1 of SEAOSC is replaced by the following statement: Three tests of each type are required. To apply the average result, none of the results shall vary by more than 15 percent from the average of the three. Otherwise, the lowest test value is used. The average results based on a minimum of five tests may also be used, regardless of the variation.

A.2.1.4 Section 8 of SEAOSC is nonmandatory.

A.2.2 Cyclic Testing of Matched Light Framed Walls Assemblies: Matched light-framed walls assemblies shall be cyclically tested in accordance with Section A.2.1 of this appendix. The cyclic protocol shall be identical to that used for the SIP assembly.

A.3.0 PERFORMANCE REQUIREMENTS

A.3.1 Data Comparison:

A.3.1.1 Data Normalization: Test data collected in Sections A.2.1 and A.2.2 shall be normalized in accordance with Sections A.3.1.2 and A.3.1.3.

A.3.1.2 SIPS: The load data collected per Section A.2.1 shall be normalized by dividing by the allowable shear of the SIP assembly determined in accordance with Sections 4.2 and 4.5, or Section 5.7 of AC04.

A.3.1.3 Matched Light-framed Walls: The load data collected per Section A.4 shall be normalized by dividing by the allowable shear as specified in IBC Table 2306.4.1. Alternatively, the allowable shear, for the use of this appendix only, shall be determined in accordance with Sections 4.2 and 4.5, or Section 5.7 of AC04

A.3.2 SIP Deflection at Allowable Shear: Based on the normalized data from Section A.3.1, the deflection at the normalized load point of 1.0, which corresponds to the deflection at allowable shear, shall be reported.

A.3.3 Backbone Curve Analysis: The representative backbone curve for the SIP assemblies or matched light-framed walls shall be the average of the positive and negative portions of all individual backbone curves of the tested SIP assemblies or matched light-framed walls, respectively.

A.3.3.1 Ultimate Load Criteria: The normalized ultimate load for the SIP assemblies shall not be less than 90 percent of that for the matched light-framed walls.

A.3.3.2 Stiffness Criteria: The normalized stiffness, slope of the normalized load versus deflection relationship at normalized load equal to 1.0, for the SIP assemblies shall not be less than 85 percent of that for the matched light-framed walls.

A.3.3.3 Deflection at Allowable Story Drift Criteria: The normalized load at the maximum allowable story drift per IBC Table 1617.3.1 (i.e., 2.5 percent wall height) for the SIP assemblies shall not be less than 85 percent of that for the matched light-framed walls.

A.3.4 Analysis of Normalized Cumulative Energy Dissipated: The area bounded by the normalized hysteresis loops shall be calculated for each cycle of the test protocol. The normalized cumulative energy dissipated by the SIP assemblies shall not be less than 85 percent of that for the matched light-framed walls.

A.4.0 EVALUATION REPORT RECOGNITION

Where compliance with Appendix A has been established, the evaluation report shall include a description of the SIP panels, installation requirements, periodic special inspection requirements in accordance with IBC Section 1707.3, product identification, and the following finding:

"Panels described in this evaluation report are permitted to be used as the seismic-force-resisting system in buildings located in Seismic Design Categories A, B, C, D, E, or F."

APPENDIX B—EXAMPLE DATA ANALYSIS PER APPENDIX A

Assume SIP assemblies were cyclically tested in accordance with Section A.3. Further, assume that matched light framed walls were cyclically tested in accordance with Section A.4 of this criteria.

Figure B.1 is a graphical representation of the backbone curve analysis per Section A.5.3. The curves labeled "Assembly – A" and "Assembly – B" are normalized backbone curves for SIP assemblies using two distinctly different construction techniques. The line labeled as "Benchmark" is representative of the normalized backbone for the matched light framed walls with wood structural panels. The three analysis criteria were examined followed by the analysis decision:

1. Ultimate Load Criteria (Section A.3.3.1): Assemblies A and B exceed the benchmark.
2. Stiffness Criteria (Section A.3.3.2): The normalized stiffness are analyzed at the allowable stress design (ASD) Load Factor of 1.0, which corresponds to the allowable design value. The normalized stiffness for Assemblies A and B exceeds the benchmark.
3. Deflection at Allowable Story Drift Criteria (Section A.3.3.3): For this example, the wall height is assumed to be 96 inches and the allowable story drift per IBC Table 1617.3 is assumed to be 0.025 h_{sx}, thus resulting in an allowable story drift of 2.4 inches. Assembly A fails to meet the criteria, while Assembly B exceeds the benchmark.

Figure B.2 is a graphic representation of the normalized cumulative energy dissipated for the SIP assemblies and the benchmark. By inspection, Assembly A is less than 85 percent of the benchmark cumulative energy corresponding to approximately the 60th cycle. Therefore, Assembly A fails to meet the criteria. On the other hand, Assembly B exceeds the benchmark for all 72 cycles.

Conclusion: Assembly A fails to meet these criteria but Assembly B meets these criteria. It is appropriate to consider the SIP assemblies constructed following Assembly B techniques as having similar cyclic performance as light-framed walls with wood structural panels.

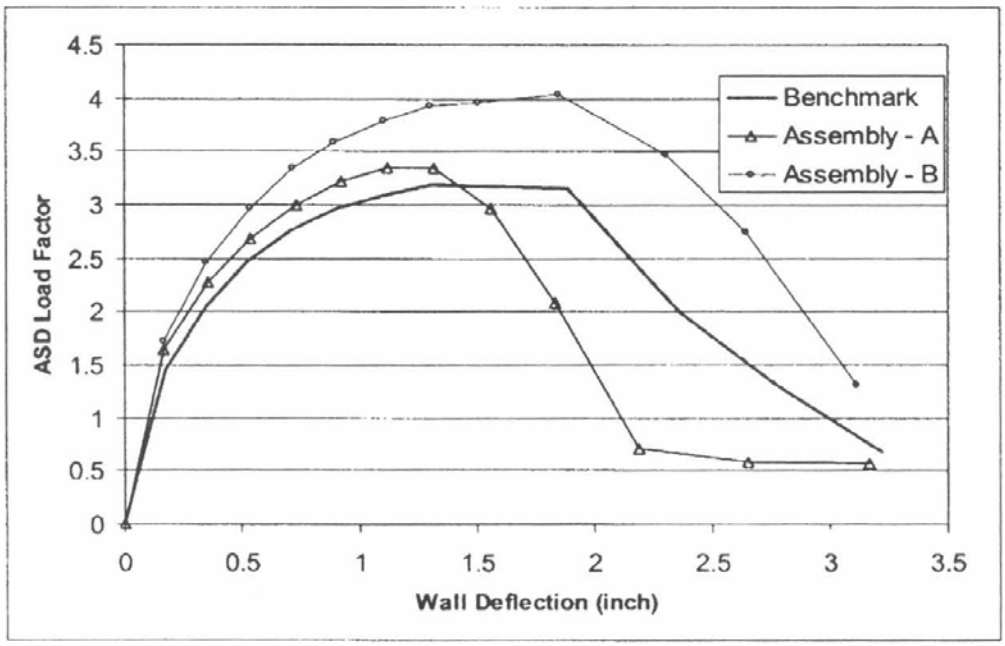

FIGURE B.1—NORMALIZED BACKBONE CURVES

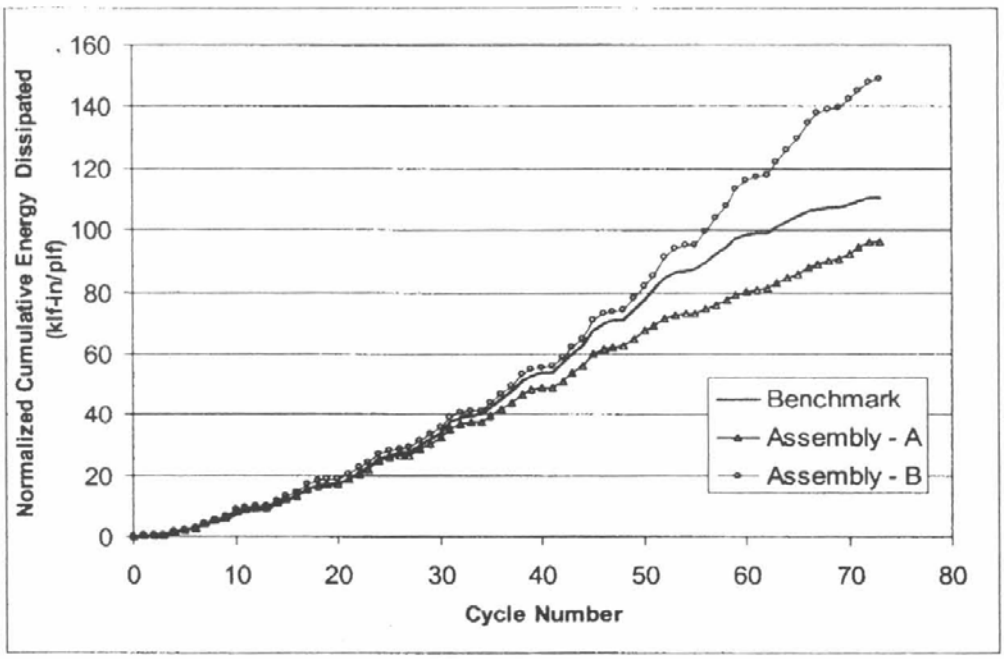

FIGURE B.2—NORMALIZED CUMULATIVE ENERGY DISSIPATED

ISO17020 (IAS AA-682)
ISO17025 (IAS TL-259)

Listing Report: **TPS082604-13**

PRODUCT: ***Thermocore Building Panels***
DIVISION: **Wood and Plastics (06)**
SECTION: **Structural Panels (06120)**

Report Holder:
Thermocore Panel Systems, Inc.
1801 Hancel Parkway
Mooresville, Indiana 46158

Manufacturing Locations(s):
Thermocore Panel Systems, Inc.
1801 Hancel Parkway
Mooresville, Indiana 46158

Thermocore of Missouri
8805 Stoney Gap Rd.
Jefferson City, Missouri 65101

1. SUBJECT:
4-in. and 6-1/2-in. Thermocore Building Panels for walls and roofs

2. SCOPE:
NTA, Inc. has evaluated the above product(s) for compliance with the following codes:

- 2003 International Building Code (IBC)
- 2003 International Residential Code (IRC)
- 2004 Florida Building Code (FLBC)
- 2004 Florida Residential Code (FLRC)
- Florida Product Approval, Rule 9B-72

Compliance Method: (Florida 9B-72)

- Test Report (TST3478)

NTA, Inc. has evaluated the following properties of the above product(s):

- Structural performance under axial, transverse, and racking loads.
- Surface burning characteristics and self-ignition temperature.

3. USES
Thermocore Building Panels are used as structural insulated wall, and roof panels in buildings of combustible construction.

4. DESCRIPTION:
4.1. General:
Thermocore Building Panels are factory-assembled, engineered-wood-faced, structural insulated panels (SIP) with polyurethane foam plastic as the core. The panels are intended for use as load-bearing or non-load bearing wall and roof components. Panels are available in 4-in. and 6-1/2-in. overall thicknesses. The panels are custom made to the specifications for each use and are assembled under factory-controlled conditions. The maximum panel size is 8-ft wide and up to 24-ft in length.

4.2. Materials:
4.2.1. Core. The polyurethane core material is minimum 2.2 pcf density which is foamed in place and self adhering to the OSB facings. The foam plastic core has a self-ignition temperature of 650° F or greater when tested in accordance with ASTM D1929. Furthermore, the foam plastic core has a smoke density rating not greater than 450 and a flame spread of 75 or less when tested in accordance with ASTM E84.

4.2.1. Facing. The facing consists of two single-ply oriented strand board (OSB) facings a minimum of 7/16-in. thick complying with DOC PS 2-92.

5. INSTALLATION:
5.1 General:
5.1.1 *Thermocore Building Panels* are installed in accordance with the manufacturer's published installation instructions and this evaluation report. The manufacturer's published installation instructions and this report shall be strictly adhered to, and a copy of the instructions shall be available at all times on the jobsite during installation. The installation instructions within this report govern if there is any conflict between the manufacturer's instructions and this report.

5.1.2 Where required by the authority having jurisdiction, structures using *Thermocore Building Panels* shall be designed by a registered design professional. Drawings shall be provided that bear the design professional's registered stamp or seal when application is made for a building permit. Such drawings shall contain specific instructions with regard to connections, erection, and installation of the panels, and shall be available at all times on the jobsite during installation.

5.1.3 *Thermocore Building Panels* are connected to each other at the panel edges through the use of a tongue-and-groove spline arrangement. The connection is secured in place by the field application of 16 gauge x 7/16-in. x 1-1/2-in. staples at 4-in. on-center, or an approved equivalent fastener. All joints

are sealed using a ½-in. x ½-in. open-cell form gasket applied to the exterior of each joint.

5.1.4 The top and bottom of the plates of the panels are dimensional wood plates sized to match the core thickness of the panel. The plates are secured in place using 16 gauge x 7/16-in. x 1-1/2-in. staples at 4-in. on-center, or an approved equivalent fastener..

5.1.2 Allowable Structural Loads. Allowable axial, transverse, and racking loads are noted in Tables 1 through 4. Axial loads applied at a spacing of up to 24-inches on center shall be considered as uniform loads for the purposes of using Table 2. For loading conditions not specifically addressed herein, the specific condition shall be framed by other methods to meet applicable code requirements.

Openings in the wall panels shall be design by the registered design professional to meet current requirements in the applicable code(s). Header and column members may be fabricated into the panels by Thermocore. Alternately, the wall panels may serve as header member for the spans, uniform loads, and deflection limits provided in Table 3.

5.1.3 High Velocity Hurricane Zones. *Thermocore Structural Insulated Panels* shall not be used in areas classified as High Velocity Hurricane Zones (Florida Broward and Dade Counties) as indicated in the referenced codes.

5.2 Panel Cladding:
5.2.1 Roof Covering. The roof covering shall comply with the applicable code(s). Underlayment and flashing shall be installed in accordance with the applicable code(s). All roofing materials must be installed in accordance with the manufacturer's installation instructions. Roofs with hot-asphalt or hot-coal tar pitch are prohibited.

5.2.1 Wall Covering. Panels, at the time of their erection and placement, shall be covered on the exterior by a water resistive wrap as required by the applicable code. The exterior of the wall panels shall be covered with an approved exterior wall covering. Installation methods shall be in accordance with the manufacturer's installation instructions.

5.2.1 Interior. Panels shall be covered on the interior of the building by an approved 15-minute thermal barrier.

6. CONDITIONS OF USE:

Thermocore Building Panels as described in this report comply with the codes listed in Section 2.0, subject to the following conditions:

6.1. Installation complies with this report and the manufacturer's installation instructions.
6.2. *Thermocore Structural Insulated Panels* shall not be used in areas classified as High Velocity Hurricane Zones (Florida Broward and Dade Counties) as indicated in the referenced codes.
6.3. *Thermocore Building Panels* shall be used only in Type V construction and shall be fully protected from the interior of the building by an approved of 0.5-inch gypsum wallboard or equivalent.
6.4. Where required by the authority having jurisdiction, structures using *Thermocore Building Panels* shall be designed by a registered design professional. Construction documents, including engineering calculations and drawings providing floor plans, window details, door details, and connector details, shall be submitted to the code official when application is made for a permit. The individual preparing such documents shall posses the necessary credentials regarding competency and qualifications as required by the applicable code and the professional registration laws of the state where the construction is undertaken. These documents are not covered by this report.
6.5. Design loads to be resisted shall be determined based on the design loads in the applicable code. Loadings on the panels shall not exceed those noted in this report.
6.6. *Thermocore Building Panels* shall be used only on buildings of combustible construction.
6.7. When used in areas of heavy termite infestation, the bottom of *Thermocore Building Panels* shall be not less than 6 inches above finish grade, and the panels shall not be installed below grade or in contact with earth.
6.8. Heat-producing fixtures shall not be installed in the panels unless protected by a method approved by the code official or documented in test reports.
6.9. The panels are manufactured in the production facility(ies) noted in this report and under a quality control program approved by NTA, Inc.

7. EVIDENCE SUBMITTED:
NTA, Inc. has examined the following evidence to evaluate this product:
7.1. Review of plant quality assurance manual
7.2. Plant certification inspection of manufacturer's production facilities, test procedures, frequency and quality control sampling methods, test equipment and equipment calibration procedures,

test records, dates and causes of failures when applicable.

7.3. Qualification test data in accordance with ICC-ES AC04.

7.4. Follow-up quality assurance audits of the production facility(ies)

7.5. Follow-up testing in accordance with NTA, Inc. *Inspection Method 14.0* (IM014).

Evaluation evidence and data are on file with NTA, Inc.

8. FINDINGS:

All panels are manufactured under an in-plant Quality Assurance program to insure that the production quality meets or exceeds the requirements of the codes noted herein and the criteria as established by NTA, Inc. Furthermore, panels must comply with the conditions of this report.

This report expires one year from the issue date noted below.

9. IDENTIFICATION:

Each eligible panel shall be permanently marked to provide the following information:

a) The NTA, Inc. listing mark, shown below;
b) NTA's Listing No. TPS082604-13
c) in-plant quality assurance stamp.
d) identifier for production facility;
e) project or batch number.

LISTED
TPS082604-13

Table 1: Allowable Transverse Load (Dead + Live)

	4-inch Thick Panels			6-1/2-inch Thick Panels		
Deflection Limit	**L/180**	**L/240**	**L/360**	**L/180**	**L/240**	**L/360**
Span (ft)	**Allowable Transverse Load (psf)**					
8	57.9[1]	43.6[1]	29.2[1]	93.6[2]	93.6[2]	60.7[2]
10	55.8[1]	42.0[1]	28.2[1]	85.6[2]	85.6[2]	58.4[2]
12	51.9[1]	39.1[1]	26.2[1]	75.7[2]	75.7[2]	54.4[2]
14	45.6[1]	34.3[1]	23.0[1]	64.1[2]	64.1[2]	47.8[2]
16	35.9[1]	27.0[1]	18.1[1]	50.7[2]	50.7[2]	37.6[2]
18	21.8[1]	16.4[1]	10.9[1]	35.6[2]	35.2[2]	22.8[2]
19.5	7.6[1]	5.7[1]	3.8[1]	15.0[1]	12.0[2]	8.0[2]

[1] Load governed by deflection.
[2] Load governed by ultimate strength divided by 3.0.

Table 2: Allowable Combined Axial and Transverse Loads[1]

	4-inch Thick Panels						6-1/2-inch Thick Panels					
	Transverse Load (psf)											
	5	10	20	30	40	50	5	10	20	30	40	50
Span (ft)	**Allowable Axial Load (plf)**											
8	2693	2693	2661	2196	1730	1265	2304	2304	2304	2304	2088	1841
10	2693	2693	2459	2007	1555	1103	2304	2304	2304	2147	1891	1636
12	2523	2523	2195	1749	1304	858	2184	2184	2179	1910	1641	1372
14	2315	2305	1851	1398	944	491	2038	2038	1905	1614	1324	1033
16	1747	1543	1136	728	321	--	1777	1636	1352	1068	784	501
18	1321	1046	498	--	--	--	1439	1318	965	613	261	--
19.5	747	23	--	--	--	--	1187	791	--	--	--	--

[1] Allowable axial tension loads shall not exceed the allowable compression loads above. Loads may be interpolated to determine the allowable load under transverse loads or spans bounded by those provided. Deflections due to transverse loads are limited to H/180. All values are for normal duration and may not be increased for other durations. Axial loads consider an eccentricity equal to approximately 1/6 the overall thickness of the panel. For applications requiring greater eccentricities, contact the manufacturer for design assistance.

Table 3: Allowable Header Loads (Dead + Live)

	4-inch Thick Panels, 12-in. Deep Header[3]		
Deflection Limit	**L/180**	**L/240**	**L/360**
Span[3] (ft)	**Uniform Header Loads (plf)**		
4'-0"	1354[2]	1354[2]	1268[1]
4'-6"	1262[2]	1262[2]	1229[1]
5'-0"	1158[2]	1158[2]	1158[1]
5'-6"	1044[2]	1044[2]	1044[2]
6'-0"	919[2]	919[2]	919[2]
6'-6"	784[2]	784[2]	784[2]
7'-0"	673[2]	673[2]	637[2]
7'-6"	479[2]	479[2]	479[2]

[1] Load governed by deflection.
[2] Load governed by ultimate strength divided by 3.0.
[3] Typical panel with single top and bottom plate installed at header location.
[4] For longer spans, solid wood headers members and support columns shall be built into the panel. Such members shall be designed by a Professional Engineer where required by the authority having jurisdiction.

Table 4: In-Plane Shear Loading[1]

Assembly Description	Overall Panel Thickness (in.)	Maximum Height/Length Ratio	Shear Capacity (plf)
4-in. thick (overall) Thermocore panels, Panel-to-panel connection: 1-in. (wide crown) x 1-1/2-in. x 16 Ga. staples 4-in. oc into spline. Panel-to-plate: 0.131 x 3-in. nails 6-in. oc into base plate.	4.0	2:1	237

[1] Limited to IBC seismic design categories A, B, and C. Tie-downs and connection to other structural elements must be design by a registered design professional.

Paneltech International, LLC
2999 John Stevens Way - Hoquiam, WA 98550
Office: 360.538.9815, Fax: 360.538.1510

"Saving the forest one tree at a time"

PaperStone XP Rainscreen

Material Specifications

Thermal Phenolic Fiber Composite

Water Absorption (by weight)		0.82%
Density (g/cm3)		0.7402%
Internal Bond (psi)		1,225 lbs.
Modulus of Rupture (flexibility)		
(face)	X direction	24,320 psi
	Y direction	24,080 psi
(edge)	X direction	21,834 psi
	Y direction	21,413 psi
Modulus of Elasticity		
	X direction	1724.25 ksi
	Y direction	1666.58 ksi
Compressive Strength		
	Z direction (face)	45,324 psi
	X direction	23,200 psi
	Y direction	22,560 psi
Coefficient of Thermal Expansion		
	X direction	3.64
	Y direction	3.48
	Z direction	2.62
Izod Impact Strength		
(face)	X direction (ft. lb. per inch of width)	3.29
	Y direction (ft. lb. per inch of width)	2.76
(edge)	X direction (ft. lb. per inch of width)	0.73
	Y direction (ft. lb. per inch of width)	0.75
Hardness Test		
	Barcole Meter (Barber Coleman)	47 avg.
UV exposure		slight darkening

All our products go through a rigorous testing and certification program to be of the highest quality, and most environmentally friendly.

Here are some of those results:

Formaldehyde Test Results
ASTM Fire Test Results

For more information contact: joel@kliptech.com

PaperStone Rainscreen Panel Installation Instructions

1.0 Product Description and Intended Application

Paneltech Rain Cladding Panels (also called *Paperstone XP*) are panels composed of a core of compressed phenolic resin-bonded cellulose fiber, normally faced on both sides with natural wood veneers and finished with a proprietary abrasion and UV-resistant coating. These panels may also be utilized without the wood veneer faces.

The panels are designed to be used as external wall cladding supported on wood battens or on aluminum sections to form a "rainscreen". This implies that, although the panels will prevent the entry of surface water, some water may enter the ventilated, drained cavity behind, through the joints between the panels. Depending on the nature of the structure behind, a secondary waterproof membrane may therefore be required (e.g. 'VaproShield').

The panels are fully finished in the factory with a proprietary surface finish which provides protection against UV light, moisture, chemical and mechanical attack. The panels therefore do not require the addition of any form of decorative or protective coating. All contractor panel cuts and contractor drilled holes in the panels must be treated with a Paneltech approved sealer, however.

As mentioned earlier, Paneltech rain cladding panels are available with and without surface veneers.

2.0 Technical Specification

2.1 Product Design and Production

The panels are manufactured by: Paneltech International LLC
2999 John Stevens Way
Hoquiam, Washington 98550 USA
Phone No. 360-538-1480

Only panels produced at this factory are covered by this document.

2.2 Sales and Marketing

The panels are marketed in the United States by: Paneltech International LLC
d.b.a. KlipTech Composites
2999 John Stevens Way

Hoquiam, Washington 98550 USA
Phone No. 360-538-1480

2.3 Panel Differentiation

Unlike other phenolic rain cladding panels, Paneltech panels are designed to be more easily worked with normal woodworking tools and they are produced from proprietary water-based resins and recycled saturating papers with at least 50% post-consumer paper waste. The company even produces an FSC-certified rain screen product with saturating paper made 100% from post-consumer waste. This gives Paneltech rain screen products, without wood veneer surfaces, a distinctive, mottled, 'organic' appearance. With or without the wood veneer faces, Paneltech rain screens panels are the most environmentally-friendly products of their kind.

2.4 Manufacture

The veneer-faced panels are made from the following materials, listed from the outer surface:

Proprietary Abrasion and UV-Resistant Coating (Surface Finish)
Environmentally-Certified Wood Veneer & Phenolic Resin
Phenolic Resin- Recycled Paper Core
Environmentally-Certified Wood Veneer & Phenolic Resin
Proprietary Abrasion and UV-Resistant Coating (Surface Finish)

The above materials are assembled (with or without the wood veneer faces), the precise combination depending upon the thickness, color and grade of the panel, and then bonded together under heat and pressure to form a very strong and rigid solid panel, which is then trimmed to size and edge-sealed.

Every stage of the production process is integrated, from the production of the recycled paper to the design and production of the proprietary phenolic resins to the 'treating' of the paper with the resins to the laminating of the panels under heat and pressure. Monitoring and inspection is undertaken of the raw materials, at all stages in the production process and of the finished panel. Quality control tests are carried out on raw materials and sample panels to verify that the required properties are in accordance with the stated requirements. The frequency of tests is set out in the company's quality manual. In addition, periodic testing is carried out by external testing organizations to ensure that product quality is maintained.

2.5 Dimensions

The panels are supplied square-edged in a 4 foot x 8 foot size (larger sizes can be special ordered, on request), in 2 thicknesses: 3/8" and ½". Tolerance on panel size is ± 1/10" on length and width and ± 1/20" on thickness.

Nominal thickness (inches)	Nominal Weight *(poundslft^2)*

3/8	2.6
1/2	3.1

2.6 Appearance

The non-veneer overlaid panels are supplied in a variety of 'mottled' colors- gray, brown, green, blue, black, yellow and others- and the veneer-faced panels are supplied with a choice of natural or pigmented wood veneers.

Because the facings are of natural wood they may vary in hue, gloss and grain from panel to panel. Although both sides of the panel are faced with wood veneer, only one face is designated as the decorative face (the other face is normally a 'balancing' veneer but can also be specified as a 'decorative' face if required).

3.0 Building Requirements

3.1 External Wail Cladding

Designed and fixed in accordance with the manufacturer's recommendations, the panels will have sufficient strength to withstand the typical wind loads expected in the Pacific Northwest and to transfer these loads to the supporting structure. (See section 4.0 for limitations and detail design). The panels are not designed to contribute any structural stability to the building.

3.2 Cavity Barriers

The need to provide cavity barriers across the ventilated cavity behind the cladding panels coincident with compartment walls and floors must be considered. A vertical wood batten (minimum 1 ½" x 1 ½") will provide 30 minutes of horizontal fire resistance, but additional horizontal cavity barriers may be required at floor level. Gaps must be provided above and below to ensure that cavities at each level are adequately ventilated and drained.

3.3 External Walls (Fire Spread)

The combustibility of the material must be considered in relation to its use in proximity to a boundary.

The Paneltech Rain Screen panels cannot be considered as contributing to the fire resistance of any external wall or load bearing structure.

Determining the combustibility of any materials adjoining the ventilated cavity (e.g. insulation, sheathing panels, breather membranes etc.) is solely the responsibility of the project designer.

3.4 Cladding for External Walls and Roof

The panels themselves will resist the passage of rain and snow when used for external

cladding, but should be designed as a "rainscreen". The amount of water actually penetrating the cladding system will depend on the effectiveness of pressure equalization

across the cladding implicit in the design of rainscreen cladding.

A ventilated drained cavity of at least 1 inch must be provided behind the cladding panels to prevent condensation forming on the inner face of the panels.

The panels should not be used in any position where they are in direct contact with ground moisture.

3.5 Fire Resistance

If the product is to be used in a construction subject to specific fire resistance requirements, an appropriate fire resistance test or assessment should be undertaken by a suitably accredited organization.

Consideration should be given to any combustible material behind the cladding, which may be exposed during a fire. Cavity barriers should be incorporated as required under relevant building regulations and technical standards.

3.6 Resistance to Water

The panels are relatively waterproof but the edges, including the cut edges should be sealed with a Paneltech-approved sealer. This is also true for holes that are cut into the panel. In any case, panels should not stand in water for extended periods of time.

3.7 Resistance to UV Exposure

The panels are designed to be relatively resistant to UV exposure. The veneer-faced panels may discolor slightly over time and the non-veneer faced panels may darken slightly over time.

3.8 Durability

Artificial advanced weathering and ageing tests show good color and gloss retention.

The panels are relatively rigid and any deflection or deformation will not affect the durability of the panels.

The predicted service life of the panels should exceed 30-40years. The decorative life of the panels will be affected by the degree of pollution and the exposure conditions of the cladding.

Note: The indication given as to the service life cannot be interpreted as a specific guarantee but should be regarded as guidance to assist the specifier in choosing products suitable for their particular selection criteria.

3.9 Impact Resistance

Paneltech Rain Screen panels have adequate resistance to hard and soft body impacts likely to occur in practice and are suitable for use in most locations. A very similarly-made non-veneered product, a skateboard ramp product also produced by Paneltech, withstands rugged BMX and skateboard outdoor use 365 days per year around the country. The wood veneered face is the least impact-resistant component of the panel.

4.0 Design of Cladding System

4.0 Structural Design

(See Drawings in Appendix A)

4.1 Panel support

Panels may be fixed to wood battens, aluminum sections, or aluminum systems supported on masonry or on a framed sub-structure. With a framed sub-structure, vertical supports should he coincident with vertical frame members.

It is the project structural engineer's responsibility to:

a) Ensure that the fasteners specified to fix the panels to the supports are adequate to transfer the predicted wind loading and to support the weight of the panels.

b) Ensure that the supports are adequately fixed to transfer the predicted wind loading to the building structure and to support the weight of the panels.

c) Ensure that the building structure- whether masonry, concrete, metal or wood framed- is strong enough to take any vertical or horizontal loads imposed by the cladding system. The panels are not designed to support any vertical loads. If any heavy objects are to be supported by the panels, or if they are to be subject to extra mechanical stresses, additional measures may need to be designed in consultation with the manufacturer.

4.2 Design of supports

Paneltech does not offer a support system for their rainscreen panels, but the following information is supplied in order to assist the designer in developing a simple support system using wood battens.

It is preferable that only vertical battens are used, to ensure that there is a fully ventilated cavity behind the panels.

If horizontal battens are used, vertical counter battens of a minimum thickness of 1 inch

must be used behind the horizontal battens to ensure that sufficient ventilation is maintained up the cavity.

Battens should be of preservative-treated softwood Structural Grade. Moisture content should not exceed 20% when fixed.

Batten sections should be not less than nominal 4 inches wide to take fixings from two panels, providing the fixings are not more than ¾" from the panel edge. If fixings exceed this distance from the edge, the batten width should be increased.

Battens for intermediate fixings, or where the edge of only one panel is to be fixed, should be not less than nominal 2 inches wide.

If separate battens are to be used to support panel edges, fixing holes should be a minimum of 1 inch from the edge.

The necessary withdrawal resistance can be achieved with 3/16" diameter screws in softwood battens nominal 2 inches wide x 1 ½" thick of structural grade or better and spaced at maximum 24 inch centers.

The length of the screws must be sufficient to penetrate at least 1 3/8" into the battens (e.g. with 3/8" thick boards the screws must be at least 1 ¾" long.) These fixings will provide adequate wind resistance within the following limitations:

- Maximum wind speed of 35 miles/hour
- Where there are no abnormal conditions (e.g. wind funneling)

For wind loadings outside these limits, the spacing of fixings, the size of battens and length of screws should be calculated by a qualified structural engineer based on the known wind loading for the specific project.

4.3 Panel Fixing

The strength and stiffness of the panels has been designed and tested by the manufacturer. Maximum spacing of fixings has been determined by these tests and by calculation of screw withdrawal resistance and should not be exceeded. In exceptional conditions it may be necessary to reduce the spacing of fixings. Design has been based on panel deflection under load at mid-span between supports not exceeding Length/200.

Fixing holes must be located not less than ¾" and not more than 1 ½" from the panel edges**. This is also required for sawn and drilled panels to which a Paneltech-approved sealer has been properly applied.** Corner fixings should be located not more than 1 ½" from either edge.

Stainless steel "parallel thread" screws can be used to fix the panels to wood battens. They should have a minimum shank diameter of 3/16" and a minimum head diameter of

½". All holes in the panels should be predrilled with a diameter 1/8" larger than the screw shank to allow for thermal expansion of the panel. Screws must be located not less than 5 x screw diameter from the edges of the battens.

Note

Alternative methods of panel fixing are possible including proprietary aluminum clip and rail systems, and adhesive fixing. Neither method is covered by these instructions and they should be discussed with the manufacturer if proposed as an alternative to the method described here.

4.4 Jointing

To allow for thermal and moisture movement of .02 inches per foot of length, a minimum gap of 5/16" must be maintained between the edges of all panels.

The following methods of jointing can be used with the Paneltech Rain Screen panels. They will provide various levels of protection against water penetrating the cladding.

4.4.1 Vertical joints

a) Open

The panels are face-fixed to separate vertical wood battens, so that both the vertical and horizontal joints appear totally open and water can readily penetrate between the panels.

b) Taped

Panels are joined on a single vertical batten, but the face of the batten is faced with a rubber tape to improve the appearance of the joint and reduce moisture uptake.

4.4.2 Horizontal joints

Horizontal joints between square edge boards are normally left open. However, they can be closed in an alternative way, if desired, by:

a) Baffle strips — a flat metal plate behind the joint and spanning between the vertical battens.

b) Rebating and overlapping the board edges.

c) Incorporating a loose tongue in grooves cut into the board edge.

Rebating and overlapping the top and bottom edges of the panels will considerably reduce the quantity of water entering through the horizontal joint but such profiling must be carefully carried out by the contractor.

The height of a rebated upstand should equal twice the face gap between the boards. The gap between the upstand and underside of panel above should be equal to the face gap between the panels.

Methods b and c can be done with 3/8" and ½" thick boards and the contractor will have to carry out the necessary machining and supply for method 'c'- loose tongues of a suitable, stable, durable material. Horizontal joint methods a, b and c are difficult to do correctly and are not recommended unless the contractor is adequately skilled. Whichever of these methods is chosen, it should be discussed with Paneltech first.

5.0 Delivery, Site Handling and Storage

Guidance on handling, stacking and storage is given below. This advice should be followed in order to avoid:

- Damage or distortion of panels
- Degradation due to wetting of the panels
- Risk of injury
- Wastage of material

5.1 Panels should be transported on flat, stable pallets, having a size not less than the overall dimensions of the panels.

5.2 Panels should be lifted off of any stack individually, taking care that they do not scrape the panel below.

5.3 Packs of panels are shrink wrapped in plastic sheets, and banded. The label on the pack should contain all necessary information on the product.

5.4 Stacked panels can be stored horizontally on a flat clean surface, or on pallets with supports at maximum 24 inch centers. Panels may also be stored on edge providing that they are tightly packed and stacked as close as possible to vertical in order to avoid any deformation. Edges of panels must be aligned whether horizontally or vertically-stacked. Stack heights may be limited by the overall lifting weight. All horizontal surfaces including pallets should be covered with a clean membrane or board to protect the bottom panel in the stack. Unwrapped stacks should be covered with a plastic sheet to protect against moisture and dirt. Baling bands should be removed after delivery.

5.5 Panels must be stored in a cool, dry and well-ventilated, covered area.

5.6 It is advisable that gloves be worn when handling either full size or cut panels.

6.0 Preparation of Panels for Use

6.1 The panels may be cut with wood saws with fine teeth and carbide tips (call Paneltech for details). Panel cutting is comparable to cutting dense wood.

6.2 For circular sawing, panels should be laid with finished, face up. For jig-sawing (sawing upwards) the panels should be laid finished face down.

6.3 Cutting should preferably be done with fixed machines and rotating tools and moving tables. The quality of the cut edge is largely dependent on the "feed" speed of the panels, which should not be more than 23 feet per minute for a high quality finish.

6.4 Undercut edges should be rounded off. Any sharp edges after sawing can be smoothed off with sandpaper, if necessary.

6.5 Panels should be drilled over a back plate with type HSS drills.

6.6 Drilling speeds should be reduced for larger diameter holes.

6.7 As mentioned several times earlier, all cut edges and drilled holes should be sealed with a Paneltech-approved edge sealer.

7.0 Installation

Under normal site conditions, the Paneltech Rain Screen panels are easy to install by competent trained operatives, with typical equipment and methods used for cladding erection. However, full size panels are heavy and care should be taken in handling and erection, particularly above ground level. Information from Paneltech will assist in designing and handling, erection and fixing of the cladding.

8.0 Maintenance

8.1 The panels may be washed down or cleaned with soft cleaning agents such as mild detergent and water. Abrasive or highly acidic or alkaline products should not be used. The use of nitro-cellulose based cleaners is not recommended as their use can result in surface scratches. Paneltech can offer advice on suitable cleaning standards.

8.2 In the unlikely event that any repair is necessary to the panels, Paneltech should be consulted as to the best method.

JM PVC

☐ 50 ☐ 60 ☐ 80

Description

JM PVC is a flexible, thermoplastic membrane manufactured using an ultraviolet-resistant polyvinyl chloride and an Elvaloy® KEE (ketone ethylene ester) formulation. JM PVC membranes are reinforced with a non-wicking polyester fabric. JM PVC membranes provide excellent weathering characteristics, high tensile strength and long-term flexibility. JM PVC membranes also have excellent resistance to harsh chemicals and industrial pollutants.

Use

JM PVC membranes can be installed in new, reroof (tear-off) and recover roof constructions. In recover construction, if the existing roof is sound, the Johns Manville (JM) roof system can eliminate the cost of disposing of the original roof. JM PVC membranes are installed over approved cushioning layers or insulations, when required.

The membrane is secured to the roof deck utilizing either mechanical fastening methods that have been tested for wind uplift in both static and dynamic pressure vessels, or adhering the membrane to an acceptable substrate. JM PVC membranes are thermoplastic; therefore, when rolled out onto the roof substrate, they can be easily welded into one homogenous sheet using hot air welding procedures. Since the JM PVC membrane utilizes a non-wicking reinforcement, the application of an edge sealant is not required.

Colors

White, Grey and Sandstone

Special colors are available with extended lead times. Minimum order quantities may apply. Contact your local JM sales representative for additional information.

Sizes

Available in 50 mil, 60 mil and 80 mil thicknesses in the following sheet dimensions:

50 mil	78"x100' (2.0 m x 30.5 m) 39"x100' (1.0 m x 30.5 m)
60 mil	78"x100' (2.0 m x 30.5 m) 39"x100' (1.0 m x 30.5 m)
80 mil	78"x 75' (2.0 m x 22.9 m) 39"x 75' (1.0 m x 22.9 m)

Applicable Standards

JM PVC membranes meet or exceed all of the requirements of ASTM D 4434, Type III. In addition, JM PVC mechanically fastened and adhered roof systems are classified by UL (Underwriter's Laboratories, Inc.), ULC (Underwriter's Laboratories of Canada) and FM Global. JM membranes meet the material requirements of the International Building Code.

Limitations

JM PVC membranes are mechanically fastened or adhered to the structural roof deck according to FM Global requirements, published standard fastening patterns or adhesives recommendations. The membranes should not come into direct contact with asphalt, coal tar pitch or any petroleum-based product.

Energy and the Environment

ENERGY STAR®	Pass	Reflectivity:	0.86	
Title 24	Pass	Reflectivity:	0.86	Emissivity: 0.86
LEED		Reflectivity:	0.86	Emissivity: 0.94
		Recycled Content Post Consumer: 0% Post Industrial: 2.5% Producing Location: Pawtucket, RI		

Results shown are for the initial reflectivity and emittance for white membranes; emissivity values for Title 24 are tested per ASTM C 1371; LEED emissivity values are tested per ASTM E 408.

Placement of JM Membrane

JM specifications require acceptable wood nailers to be installed according to FM Global current recommendations in Loss Prevention Data Sheet 1-49 and current JM Detail Drawings. Insulation must neatly fit around all the roof penetrations and projections.

Insulations used must be accepted by JM for use in the system to be installed. Fastening of the insulation must be in strict accordance with JM standard fastening requirements and/or any applicable code requirements, whichever is most restrictive or required by the building owner.

Method of Attachment

See product guide specifications for proper installation methods and additional technical data.

Guarantees

JM provides full system guarantees as outlined below:

20 year	60 mil, 80 mil
15 year	50, 60 and 80 mil
10 year	50, 60 and 80 mil

For detailed guarantee information, see the JM system guarantee chart.

JM PVC-50, 60 and 80 membranes meet or exceed all of the requirements of ASTM D 4434, Type III.

Typical Physical Properties

Property	ASTM Test Method	Values
Breaking Strength	D 751	>200 lbs./in. (35 kN/m)
Elongation at Break	D 751	>20%
Properties After Heat Aging		
Breaking Strength	D 751	>90% of original
Elongation	D 751	>90% of original
Tear Resistance	D 751	>45 lbs./in. (7.9 kN/m)
Low Temperature Bend	D 2136	Pass at -40°F (-40°C)
Accelerated Weathering Test	G 53	
Cracking (@7x magnification)		None
Crazing (@7x magnification)		Negligible
Discoloration (@7x magnification)		Negligible
Linear Dimension Change	D 1204	<0.5%
Change in Weight After Immersion in Water	D 570	<3.0%

Refer to the Material Safety Data Sheet prior to using JM PVC. Material Safety Data Sheet is available by calling 800-654-3103 or online at www.jm.com.

View MSDS

WATER FIRE HAIL WIND

UNIVERSAL FLOORING

EXCLUSIVE
XL Glueless Technology
ON Engineered Hardwood

Self Locking joint is pre-glued with a self-activating adhesive that bonds to create a fusion set joint and a precision alignment every time.

Engineered Hardwood Flooring,

Float Installation System Instructions

Latest revision 05/05

DO NOT OPEN THE PACKAGES UNTIL THE DAY OF INSTALLATION!!
THE INSTALLER HAS FINAL INSPECTION RESPONSIBILITY TO PULL OUT AND NOT INSTALL PIECES WITH NOTICABLE DEFECTS.

READ ALL INSTRUCTIONS CAREFULLY BEFORE STARTING

Universal Flooring's "XL glueless" (self-locking) engineered wood flooring incorporates the world's finest hardwoods to furnish a very versatile system for beautiful floors. As with any job you will be proud of for a lifetime, you will want to plan your installation carefully. Failure to follow these instructions can cause problems.

Hardwood Flooring is a natural product. It will expand and contract with changes in the relative humidity of its environment. This is important to note, because the floating installation of the product takes this into consideration. Not following these instructions can cause floor failure.

Preparing the Site and Sub Floor

This Universal Flooring's product is installed using the Floating System. The aligning and self locking mechanism is activated when 2 pieces are tapped in place. The instructions are detailed in this sheet. Universal's product can be installed, above ground level, on ground level or below ground level.
This product is not recommended for installation in full bathrooms due to the higher levels of moisture.

- Check the exterior of the home for possible moisture problems. Does the lot grade away from the home? Do the down spouts direct the rain water away? Are the sprinklers hitting the house?
- Is the sub floor dry
- Is the sub floor flat to 3/16" in 10' and firm
- For wood subfloor, it is recommended to repair any loose areas or squeaks and sand down the high spots.
  For Concrete: fill low areas (no more than 1/8") with a quality floor leveling compound that has filler rated of no less than 3,000 p.s.i.
- A 6-mil poly sheet (below the underlayment) is required in all floating installations that are below grade or where moisture may be a concern.
- Radiant heated floors cannot exceed 85°F or they may cause damage to this floor.

Testing Sub Floor for Moisture

Wood subfloors: Tested with an approved moisture meter in several places, can not have moisture content above 12%.

Concrete: According to the National Wood Flooring Association (NWFA), you can test for moisture in concrete by securely taping a 2' square piece of polyfilm (plastic sheet) to the slab in 3 to 4 locations. Let the piece of plastic stand for 24 hours. The presence of moisture is certain if the slab under the removed plastic is discolored, or the plastic is cloudy, and/or especially if water droplets are on the underside of the plastic sheet. If tests indicate too much moisture in the slab, do not install hardwood floors. For a moist slab, wait until it dries naturally, or accelerate drying with heat and ventilation and test again. This is only one way to test for moisture in the concrete slab, contact hardwood installation professional for other suggested ways of checking for moisture. Concrete sub floors should be tested for moisture in several areas; especially near exterior walls and walls containing plumbing.

Calcium Chloride tests and approved moisture meters are also excellent ways to determine the level of moisture in concrete. Results of a Calcium Chloride test should be recorded and filed for documentation purposes. Allowable moisture level is 3 lbs. Per 1,000 square feet per 24 hours. Moisture meters, like the Wagner and the Tramex, should read no higher then 6%.

Large Room Installation:

Due to the relative humidity and temperature fluctuations throughout North America we recommend always allowing for a ½" expansion gap at the walls around the entire perimeter of the floor and against all immovable objects. Any continuous flooring installation in excess of 30 feet will require additional expansion gap. This can be accomplished by adding to the ½" gap at the wall and in cases with over 40 feet continuous flooring lay, adding expansion through the center of the floor with a "T" mold.

Responsibility of the Installer and/or Owner

This is a natural product. It is to be expected that some natural characteristics will be present that may be objectionable to some customers as well as minor manufacturing issues. The National Wood Flooring Association (NWFA) recommends to all its member manufactures that an install should figure an additional 5% to 7% of material to allow cutting waste and for natural characteristics or minor manufacturing defects. The floor installer must determine before installation that the condition of the subfloors meets or exceeds the conditions outlined in this instruction sheet. Universal Flooring will decline any responsibility for job failure resulting from or associated with subfloor or job site environment deficiencies. The floor installer assumes all responsibility for final inspection of product quality before installation. The installer should pull out and refrain from installing products with notable defects. Use of filler or putty stick for defect correction should be accepted as normal procedure. During installation, you should open a few cartons of product ahead of your progress and mix them to insure even color and shade mixture.

Preparing the Jobsite

- Before installing any Universal Flooring product, central heat or air conditioning should be operating for 14 days. Universal Flooring products should be stored in a flat position. The homes relative humidity should remain between 40% - 60% year round. **Do not open packages until the day you are ready to begin installation.** This prevents the T&G system from potentially absorbing too much moisture and causing a tight fit.
- Remove existing moldings.
- Undercut door jams with hand or jamb saw to allow for ease of installation and ½" expansion space in all directions. (Figure 1)
- Eliminate cutting short pieces at the end of each row and in the width of your finishing rows. Accomplish this by measuring the length and width of the room. Divide those measurements by the length and width of the planks. If it appears you will be using a piece shorter than 12" at the end of a row, cut the first board at the starting wall to allow for a longer piece at the end. You do not want to have a row narrower than 3" along the last wall. You may need to cut down the width of the first row to allow for the flooring to be moved so the last row will not be to narrow. **Remember to allow for ½" expansion along the walls**.

Underlayment Installation

Tools and Accessories:

Minimum 1/8" Closed Cell Foam	Razor Knife
(Below Grade) 6 mil poly sheet	Duct Tape

- Sweep and vacuum the sub floor and make sure again it is flat, sound and dry
- When over a concrete sub floor, for a moisture barrier, use a 6-mil poly sheet over the subfloor, then lap the edges 6" and run approximately 4" up each wall. Tape the seams with duct tape then cover with the 1/8" closed cell, or other recommended foam underlayment.
- Cover sub floor with 1/8" closed cell poly recommended underlayment. Roll out and lay underlayment perpendicular to the direction that the floor will be installed.
- Trim excess 6 mil plastic at walls after molding has been installed since you need to run it up the wall behind the molding.

Getting Started

Common Tools & Accessories

Hand or Jamb saw	Measuring tape
Power circular saw	Prybar or Trim puller
Safety glasses	½" Wood Wedges (spacer strips)
Hammer (22 0z best)	Straight edge
Square	Pencil

Special Tools

23" Large Tapping Block 2 lbs
Approved Pull Bar

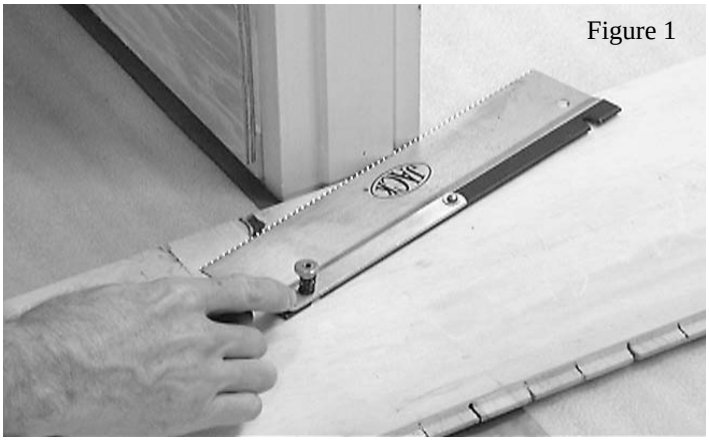

Figure 1

The floor is installed using tapping strokes to engage the alignment profile. It is important to make sure you have a sound and firm structure to brace your initial rows against that does not move with the tapping forces. Install the planks with the groove side toward the wall. Each row will be installed with a groove over a tongue. You will be tapping along the tongue of each plank.

NOTE: Boards in the first row may need to be scribed and cut to contour the first row with the wall and to allow for ½" expansion. Allow ½" expansion space at all vertical obstructions. Use ½" wood wedges or short cut pieces of the 9/16" floor against wall to hold boards true to spacing. It is important that the boards follow the wall. Scribing is used if the wall is not straight. First mark the board with a scribing tool or other tool that will allow you to follow the shape of the wall, then cut it lengthwise to follow the line. (Figure 2)

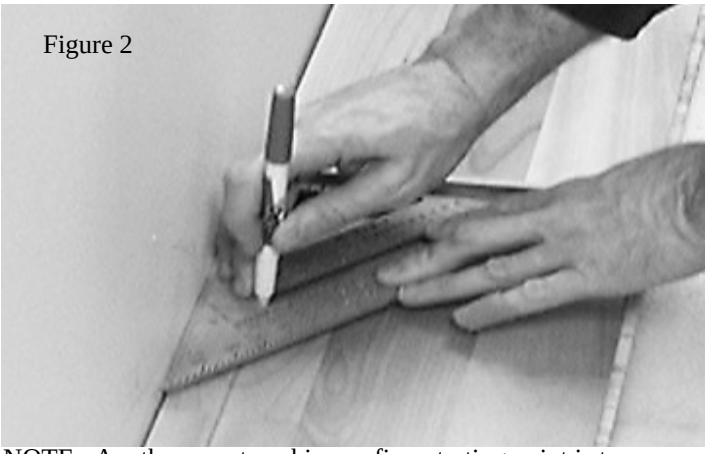

Figure 2

NOTE: Another way to achieve a firm starting point is to screw down a straight length of 1X3 lumber, or other straight, firm material along the full length of the starter wall. This is set to the outside edge the distance of the width of your end planks plus the ½" expansion. You will be remove this after the rest of the floor is installed and the space filled with ripped to size flooring

Starting off with the first three rows
After setting the first row and making sure you are against a firm starting point, lay out three to four rows before starting to install. (Figure 3)

This initial layout of material will allow you to check your end seams to ensure they are not too close. End joints on adjoining rows should be offset by no less the 16” Move rows if necessary to ensure you are not showing any undesirable joint patterns. The rest of the rows end joints should be random throughout the floor.

Your first three rows are staggered by half a board length. The first row starts with as full a length board as possible. The second row starts with a board half the length of the first row and the third row starts with a board as long as the first row. (Figure 3)

Spacers and wedges are used along the walls to hold the boards in place from the force of installation. They must be large enough to allow for the needed ½” expansion. They must fit snug along the wall at each end joint and randomly along the sides. (Figure3)

When the boards are being tapped in place, a pyramid or stair step pattern is used to ensure the boards remain engaged through the force of the tapping. The numbered process is shown in figure 3.

The 22 0z, hammer and large tapping block work together to direct the energy through the block, then through the core of the plank so as not to damage the tongue. (Figure 4) For best results, slide the hammer on the subfloor using sharp tapping strokes. If the planks aren’t going together, check to see if the boards are moving against the wall with the strikes. If so, adjust shims to firm up or use the screw down starter row method.

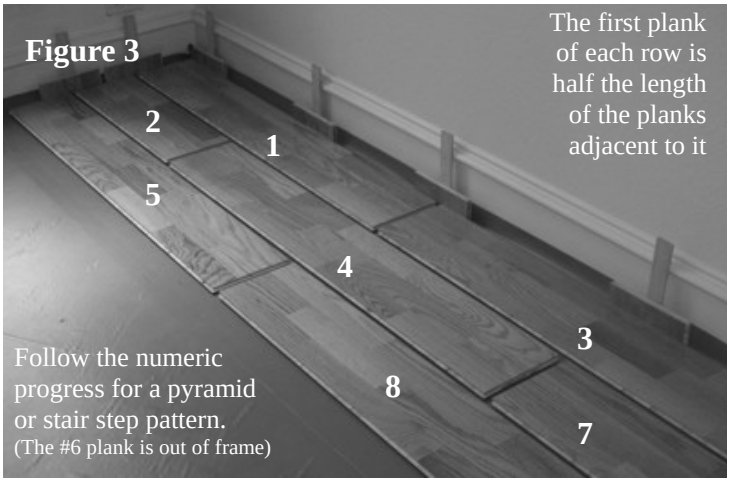

Tapping the planks together
When tapping the boards together the following process works best.

1. Push the board’s end and side together until they fit sung. A 1/16” gap is usual. (Figure 5)
2. Using the tapping block and hammer, tap in the end joint in first. Make sure the starter plank is soundly set against the wall with the appropriate shims and ½” expansion space. Be careful not to apply too much force since this could actually cause the end joint to open up. (Figure 6)
3. To engage the sides, start tapping in the plank at the opposite end along the side, making sure the plank engages as you progress down the length (Figure 7)

Your initial rows, if you are not against a firm starting structure, may seem more difficult to engage than the proceeding.

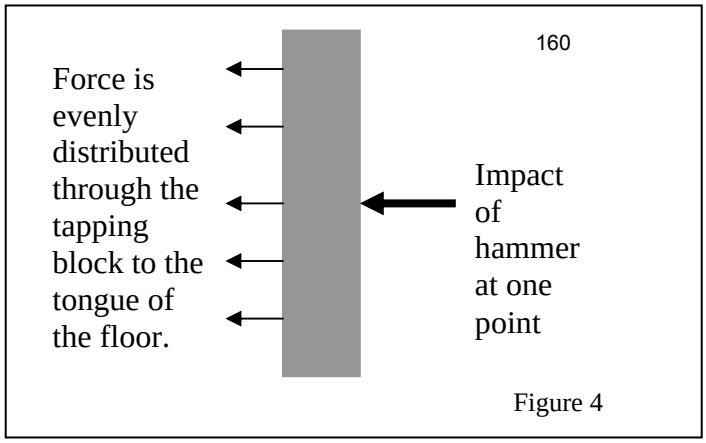

Figure 4

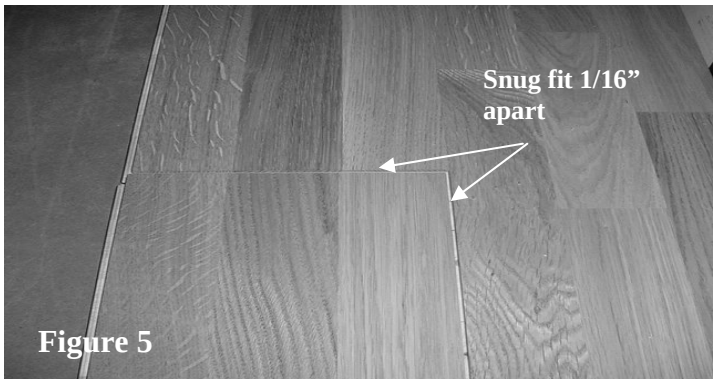

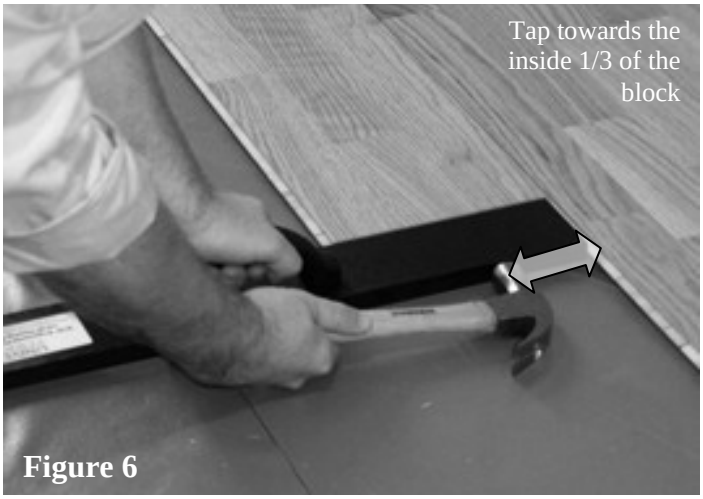

Figure 8

Installing the last plank in the row
The last plank will be cut to size, include the ½" expansion.

- Using the approved pull bar, first tap in the end joint
- Then tap in the length starting form the opposite end
- Then secure with wedges or shims

NOTE: Slide the hammer along the top of the bar. Striking downward on the turned up end can cause the bar to bend and damage the floor. It is also a good idea to put a cut piece of the underlayment between the pull bar and the flooring.

Installing the Last Row
The last row in most cases will need to be cut length wise to fit. The cut of the board has to compensate for uneven walls and the necessary ½" expansion space so scribing is needed.

- Measure the gap, allowing for the ½" expansion space, transfer the measurement onto the plank, scribe the contour on to the board and cut along the line
- Use the pull bar to tighten the seam along the last row. (Figure 8)

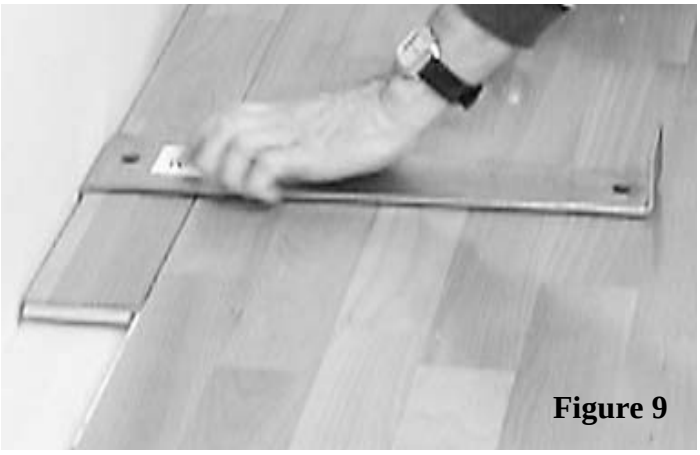

Figure 9

Completing the job with molding
All trims and moldings are pre-finished to blend with your newly installed floor.

For best results, pre-drill molding pieces for ease of installation. Moldings should be nailed to the wall and not to your newly installed floor.

Most moldings are designed to allow the flooring to freely float underneath. This allows for seasonal expansion and contraction. It's important to make sure that when finish painting the moldings, do not caulk where the molding covers the finished floor. This will hold the flooring back from expanding and contracting

The Completed Job

Now that the floor is fully installed, the following must be mentioned to address long term expectations and provide satisfaction with your investment.

Hardwood flooring will scratch and dent
With today's active lifestyles it is important to note that hardwood flooring can, and will, scratch and dent. See Protecting Your Hardwood Wood Floor Helpful Hints. Should an accident occur it can be refinished to provide a lifetime of service. In order to prevent excessive abuse the use of strategically placed mats and area rugs as well as floor protectors on chair and table legs are a must.

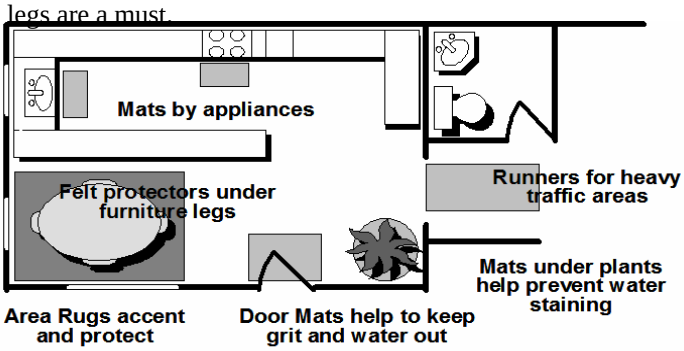

Regular maintenance is simple
Maintaining a hardwood floor is not as hard as it seams. Keeping it swept and vacuumed is the number one step to preventing excessive wear. Keeping granular dirt off the floor will prevent abrasive wear. Regular cleaning with approved hardwood flooring cleaners keeps the floor from staining and appearing cloudy. An approved cleaner is simply one that does not require a damp mopping. Usually it is a simple spray cleaner that is wiped off after application. These cleaners are designed to evaporate away quickly.

Hardwoods react to sunlight
Hardwood contains certain types of acids in their cellular structure. With exposure to sunlight these acids begin to amber. The color change is referred to as patina. The wood will reach its own natural warmth and patina level and stop ambering. The amount of patina is directly related to the species, amount of acids and the level of sunlight. The entire floor will reach the same patina level over time. This is often noticed after a rug is removed and the floor is noticeably different in color underneath. If you remove the rug and expose the entire floor to the same amount of light, it will even out.

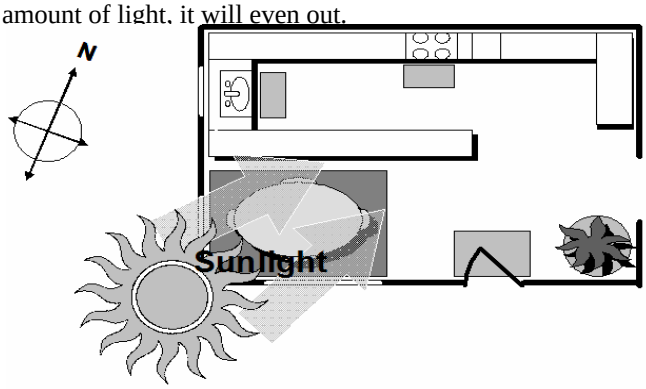

Additional technical support
If additional information is needed please contact your local Weyerhaeuser.

Weyerhaeuser

FACT SHEET 501

LYPTUS® HARDWOOD LUMBER

Lyptus® lumber is manufactured from eucalyptus, a prolific, fast-growing hardwood. Its grain is straight, even and moderately coarse. The trees are grown on well managed plantations certified by Brazil's national certification system, and recognized by the Programme for the Endorsement of Forest Certification (PEFC) schemes, one of the world's largest certification organizations. They reach maturity in 14 to 16 years, and with careful pruning produce lumber that has a high percentage of clears.

LYPTUS® LUMBER: CHARACTERISTICS AND BENEFITS

Good working qualities

- Is well suited for a wide variety of interior applications.
- Has good machining and turning properties.
- Glues and holds fasteners well. Sands to a smooth, semi-polished surface.
- Lyptus® lumber absorbs a variety of stains evenly, from oil- to water-based.

Sorted for color & density

Lyptus® lumber varies in color from dark red to light pink. The heartwood is red to pink and the sapwood is paler. It has a large heartwood core. Its density varies depending on color, with the darker color similar to hickory in density and the lighter color similar to birch and ash in its density.

The benefit of color sorting provides manufacturers more consistent color as well as density.

- Red color sort is denser, and ideal for hardwood flooring.
- Pink color sort is relatively less dense, and works well for cabinets and furniture.

Product Availability:

- Grades: Superior, FAS, Select, CJB, #1 Common, Component Plus, #2, Rustic
- Thicknesses from 4/4 to 8/4
- Lengths from 6' to 16'
- Moisture content 7-9%

Note: Lyptus® lumber is manufactured by Aracruz Produtos de Madeira (APM) S.A., a joint venture between Weyerhaeuser and APM, and available from Weyerhaeuser.

PROPERTIES OF COMPARABLE WOODS

The following table is based on tests by the US Forest Product Laboratory and Weyerhaeuser Technology Center.

Lumber (12% moisture content)	Specific Gravity (density)	Dimensional Movement R (%)	Dimensional Movement L (%)	Hardness (lbs)	Compression Parallel (psi)	Bending Strength (psi)	Bending Stiffness (Mpsi)	Machining rating 1-5	Sanding rating 1-5	Finishing Paint/Stain rating 1-5	Gluing rating 1-5	Fastening rating 1-5	Grain
Lyptus®, red	.80	8.5	11.5	1796	9417	18862	2180	3	3	4	4	5	Mod/coarse
Lyptus®, pink	.68	8.2	12.8	1422	8636	17114	2049	3	3	4	4	5	Mod/coarse
Hickory	.66	4.9	8.9	1820	7850	13700	1730	3	4	2	2	3	Mod/coarse
Oak, white	.68	4.4	8.8	1360	7440	15200	1780	4	5	5	5	5	Mod/coarse
Maple, sugar (hard)	.63	4.8	9.9	1450	7830	15800	1830	4	3	5	3	3	Fine
Oak, red (Northern)	.63	4.0	8.6	1290	6760	14300	1820	4	4	4	3	5	Coarse
Birch, yellow	.62	7.3	9.5	1260	8170	16600	2010	4	3	4	3	3	Fine
Ash, white	.60	4.9	7.8	1320	7410	15400	1770	4	4	4	3	5	Fine
Walnut, black	.55	5.5	7.8	1010	7580	14600	1680	4	5	3	5	4	Medium
Cherry, black	.50	3.7	7.1	950	7110	12300	1490	5	4	5	5	4	Mod/coarse
Maple, PC (big leaf)	.48	3.7	7.1	850	5950	10700	1450	4	4	4	4	4	Fine
Maple, silver	.47	3.0	7.2	700	5220	8900	1140	2	3	4	4	4	Fine
Poplar, yellow	.42	4.6	8.2	450	5290	9200	1500	3	2	5	5	4	Fine
Alder, red (Western)	.41	4.4	7.3	590	5820	9800	1380	4	5	5	5	3	Fine

Specific Gravity:
A wood's specific gravity is an indication of its density. The number itself is the ratio of the wood's density compared to that of water (1.0). The larger the value the more dense the wood.

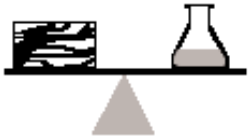

Dimensional Movement (Shrinkage):
Wood products shrink and swell as they absorb or lose moisture. Dimensional movement is expressed as a percent of that change.

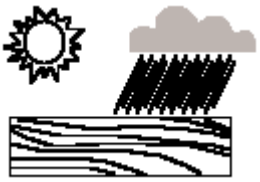

Hardness (Janka Ball test):
The value is the force required to embed a 0.444 inch diameter steel ball to one-half its diameter into the radial and tangential surfaces of solid wood. The higher the value the harder the lumber.

Compression Parallel:
Commonly called crushing strength. The larger the number the greater the lumber's ability is to withstand force applied to a column.

Bending Strength (MOR):
The maximum load carrying capacity in bending. The larger the number the higher the load the lumber can support before failing.

Bending Stiffness (MOE): Bending stiffness or elasticity is a description of deformation under load or stress. The larger the number the less deformation the lumber will have under load.

Machining: This number is an average of five operations: shaping, turning, mortising, planing and boring. The number five represents the best performance.

Sanding: The number five represents the best sanding performance.

Finishing: The ratings indicate whether a wood is easy, medium or difficult to finish, with a five rating being the easiest and most versatile to finish.

Gluing: Wood with the least residues (oil, gum, pitch, etc.) glue the best. Five is the best rating.

Fastening: Woods that accept and hold screws, nails and other fasteners the best, are given the highest rating.

HARDWOODS & INDUSTRIAL PRODUCTS
Domestic Sales 866-870-3040
International Sales 253-924-5683
weyerhaeuser.com/HIP

TAMKO® TW FLASH-N-WRAP®-40

Self Adhering Reflective Sheet Membrane

PRODUCT DATA

DESCRIPTION

TAMKO® TW FLASH-N-WRAP®-40 is a flexible self-adhering rubberized asphalt sheet membrane with a reflective aluminum surface and a removable treated release film on the adhesive side.

USES

TAMKO TW FLASH-N-WRAP-40 is well suited for application in cavity-wall construction, as a moisture and air barrier membrane.

ADVANTAGES

- Flexible SBS modified asphalt and aluminum surfacing provides excellent protection from moisture or air penetration.
- Treated release film for easier installation and handling.
- High temperature resistance up to 245˚F.
- Adheres to cast-in-place concrete, pre-cast concrete, concrete masonry block, exterior gypsum sheathing, plywood, OSB, DensGlass®, DensGlass Gold®, felt-faced and foil-faced polyisocyanurate foam insulation, wood, or metal surfaces.
- Available in factory pre-cut widths of 4", 6", 9", 12", 18", and 36".
- Tough aluminum surface resists UV degradation up to 180 days. Reflective surface for UV resistance.
- ICC-ES ESR-1984

LIMITATIONS

- Membrane or primer should not be applied to damp, frosty or contaminated surfaces..
- Tough aluminum surface resists UV degradation up to 180 days, however TAMKO recommends covering this material as soon as possible for ultimate product performance as severe weather to exposed product may affect performance.
- Membrane should not come into contact with Membrane should be applied when air, substrate, and membrane temperatures are above 40°F.
- Not designed for use in ponding areas.

PRODUCT DATA*

Surfacing	Aluminum
Asphalt Modifier	SBS
Product Thickness	40 mil
Rolls per Pallet	30

Roll Width	Roll Size	Coverage per Ctn.	Rolls per ctn.
4"	4" x 75'	225 sq. ft.	9
6"	6" x 75'	225 sq. ft.	6
9"	9" x 75'	225 sq. ft.	4
12"	12" x 75'	225 sq. ft.	3
18"	18" x 75'	225 sq. ft.	2
36"	36" x 75'	225 sq. ft.	1 roll/wrapper

*All values stated as nominal at time of manufacture.

TYPICAL PHYSICAL PROPERTIES

Property	Test Method	Typical Value
Elongation at Modified Failure**	ASTM D 412	300%
Tensile Strength	ASTM D 882	9 lbf
Elongation at Maximum Tensile	ASTM D 882	6%
Low Temperature Flexibility	ASTM D 1970 (modified)[1]	-15˚F
Peel Strength	ASTM D 903	9.0 lbf/in. width
Lap Adhesion	ASTM D 1876	7 lbf/in. width
Puncture Resistance	ASTM E 154	40 lbf
Accelerated Weathering	ASTM D 4798, Cycle A	100 Cycles, Pass
Permeance	ASTM E 96 (BW)	0.05 perms (max)

**% of elongation to ultimate failure of rubberized asphalt.

[1] Testing done using procedures in ASTM D 1970 with adhesive side away from the mandrel.

TAMKO® TW FLASH-N-WRAP®-40

Self Adhering Reflective Sheet Membrane

APPLICATION INSTRUCTIONS

PREPARATION

All surfaces must be dry and clean. Dirt, dust and any other foreign matter must be removed. TW FLASH-N-WRAP-40 should be applied when air, substrate, and membrane temperatures are above 40 degrees F.

Acceptable surfaces include cast-in-place concrete, pre-cast concrete, concrete masonry blocks, exterior gypsum sheathing, plywood, OSB, DensGlass®, DensGlass Gold®, felt-faced and foil-faced polyisocyanurate foam insulation, wood or metal surfaces. Concrete must be allowed to cure for a minimum of 7 days prior to application of TW FLASH-N-WRAP-40.

PRIMING

Priming is generally not required for wood and exterior gypsum sheathing, or felt-faced and foil-faced polyisocyanurate, provided they are smooth, clean, and dry. In any case where adhesion is found to be marginal and in all cases for concrete, masonry, OSB, DensGlass, and DensGlass Gold, prime with TWP-1*** or TWP-2 at designated coverage rates.

For DensGlass and DensGlass Gold the following priming instructions must be followed.

Priming Instructions for applications over DensGlass and DensGlass Gold: With a roller, apply TWP-1 Quick Dry Primer to the DensGlass Gold at the rate of one gallon per 250-300 square feet. Allow the primer to dry a maximum of 5 to 10 minutes, based on temperature. Higher temperatures will require shorter dry time. It is critical that you not allow the primer to dry longer than 10 minutes before the application of the membrane. With this substrate, it is not possible to do long stretches of priming before application.

APPLICATION

Unroll TW FLASH-N-WRAP-40 and cut to the desired length. Begin by removing approximately 12 inches of the release film and center the membrane over the area to be covered. Firmly press or roll the membrane against the substrate and continue pulling the release film off while smoothing the membrane into place.

For DensGlass and DensGlass Gold sheathing and OSB, all air and vapor barrier applications are to be done vertically with membrane no longer than 6 feet. Material must be broomed in using a stiff, hand-held broom. In all DensGlass, DensGlass Gold, and OSB applications staples are to be applied 18" on center to the individual pieces of membrane around the entire perimeter of the piece.

FULL COVERAGE ENVELOPE APPLICATIONS

In full coverage envelope applications TW FLASH-N-WRAP-40 should be tightly sealed into roofing and below-grade waterproofing systems and structural perimeter flashings to retain the integrity of the air barrier throughout the entire structure. Note that in full structure envelope applications, the dew point must be engineered to the outside of the building.

Side laps should be a minimum of 2 inches and end laps should be 4 inches. All terminations should be sealed with TWM-1 Mastic.

***** WARNINGS AND HAZARDS**

TWP-1 contains combustible solvents. Avoid exposure to sparks, open flame, heat, and other forms of ignition. Use in well ventilated areas. Avoid breathing vapors. Refer to MSDS for detailed product information and warnings.

CAUTION: The National Institute for Occupational Safety and Health (NIOSH) has concluded that fumes of heated asphalt are a potential occupational carcinogen. Do not burn this product.

This product is covered by a 5-year limited warranty. For information regarding or a copy of TAMKO's limited warranty, contact your local TAMKO representative, visit us online at www.tamko.com, or call us at 800-641-4691.

www.tamko.com

Corporate	220 West 4th Street, Joplin, Missouri 64801	800-641-4691
Central District	220 West 4th Street, Joplin, Missouri 64801	800-641-4691
Northeast District	4500 Tamko Drive, Frederick, Maryland 21701	800-368-2055
Southeast District	2300 35th Street, Tuscaloosa, Alabama 35401	800-228-2656
Southwest District	7910 South Central Expressway, Dallas, Texas 75216	800-443-1834
Western District	5300 East 43rd Avenue, Denver, Colorado 80216	800-530-8868

TAMKO® BUILDING PRODUCTS

Standard Folding Glass Wall Detail Key

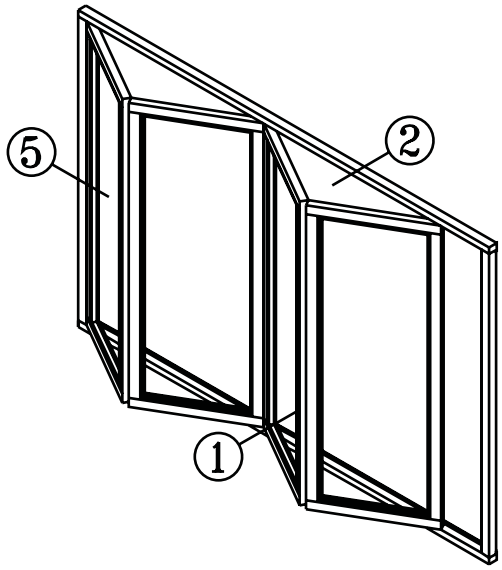

All Wall

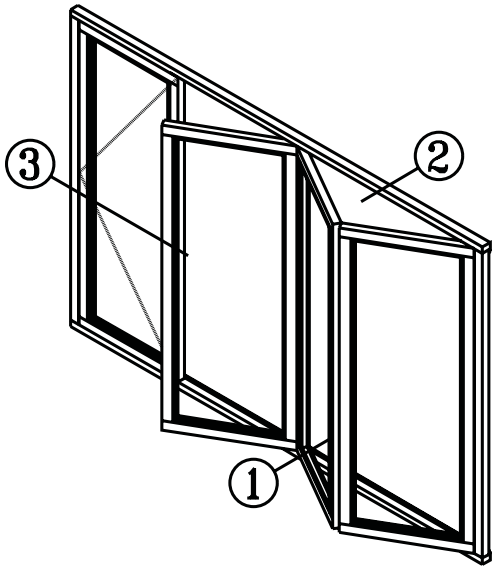

Hinge Jamb

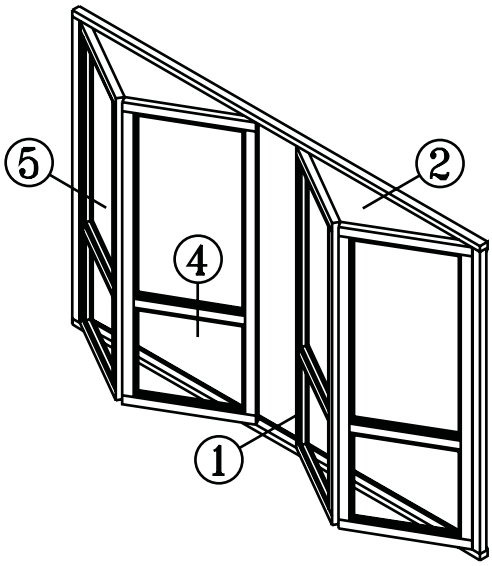

Split Wall

"EXTERIOR" "INTERIOR"

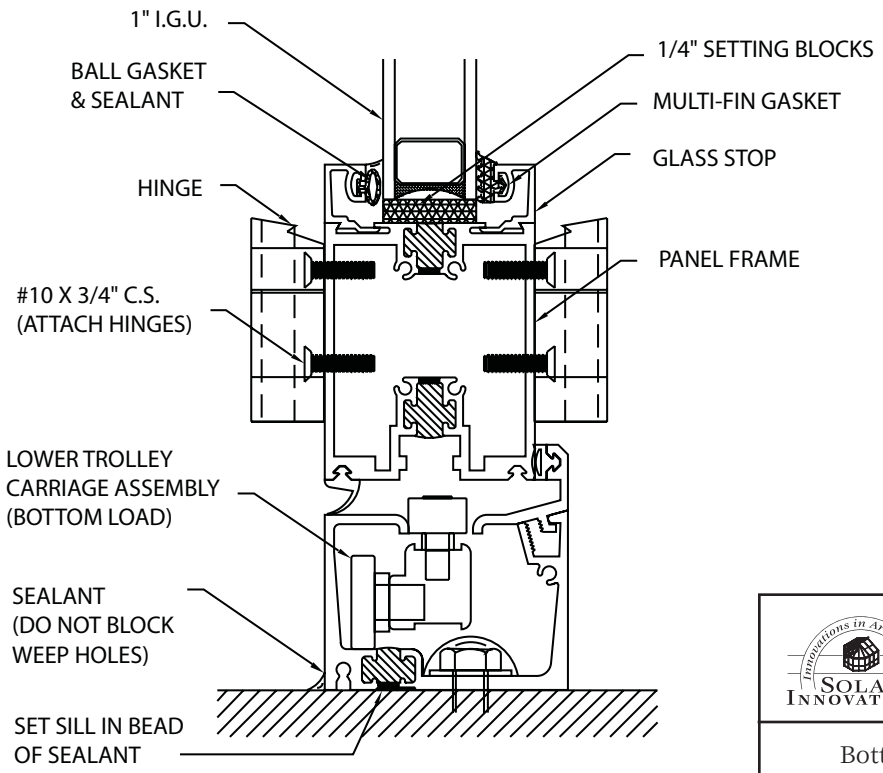

Detail # 1

Bottom Load Sill
Outswing

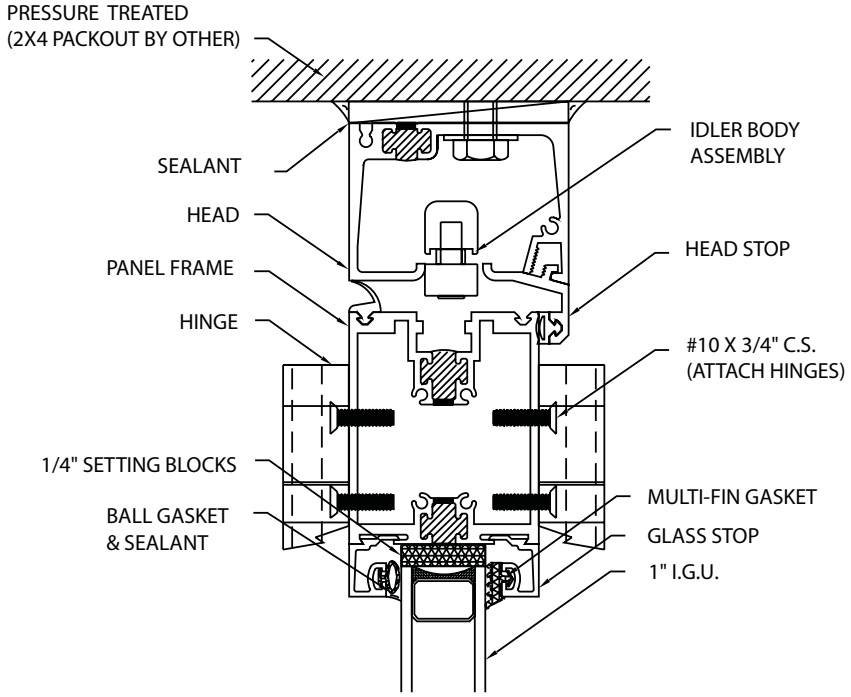

"EXTERIOR" "INTERIOR"

Detail # 2

Bottom Load Head
Outswing

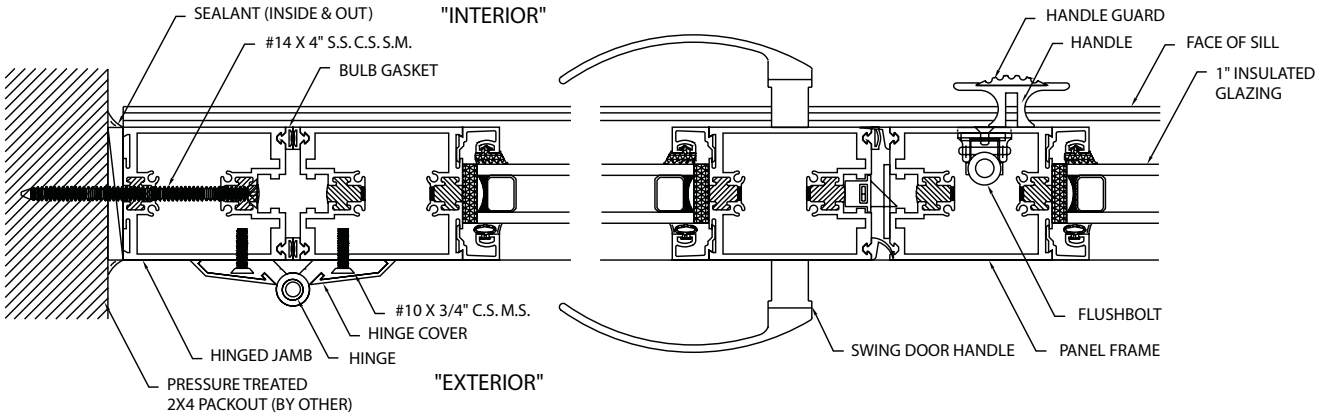

Detail # 3

Unit Section at Swing Door

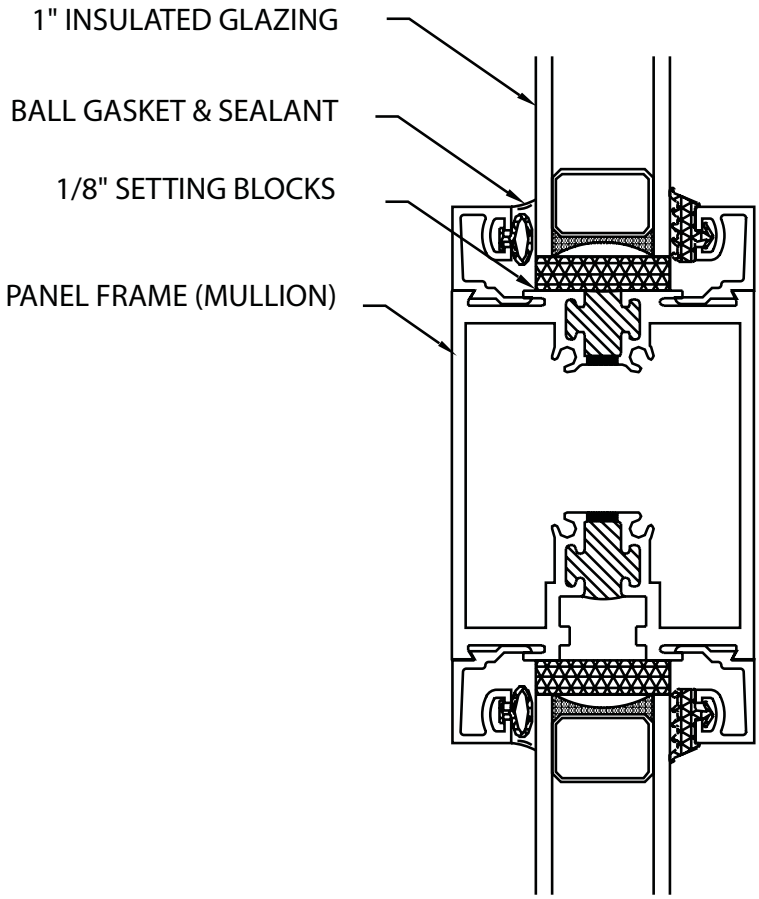

Detail # 4

Mullion with Glass Bottom

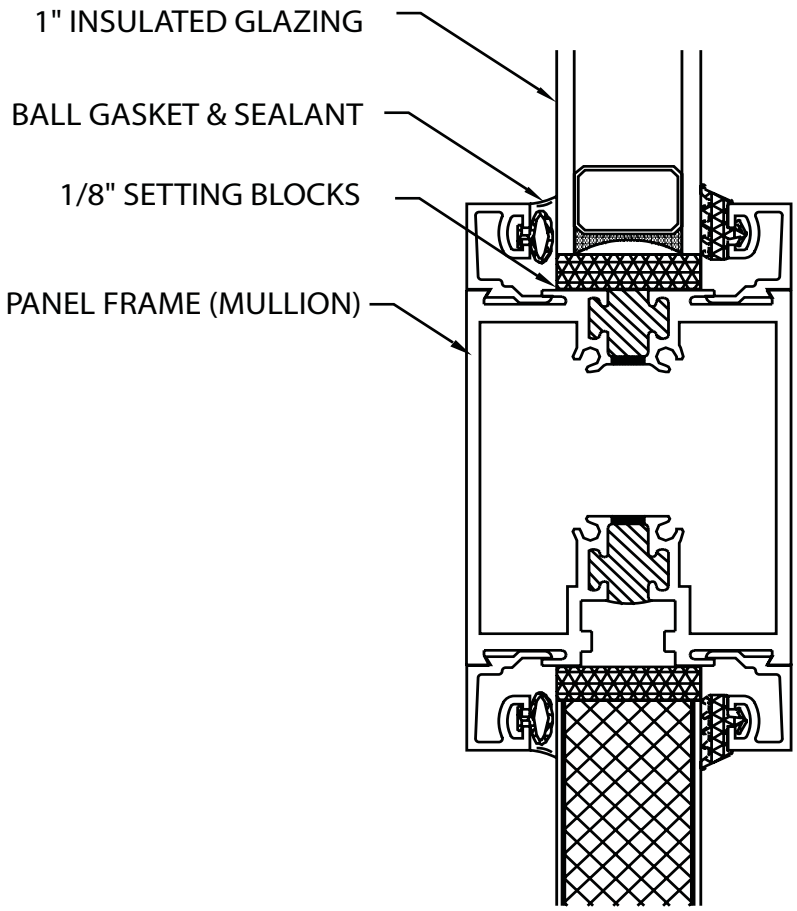

Detail # 4A

Mullion with Panel Bottom

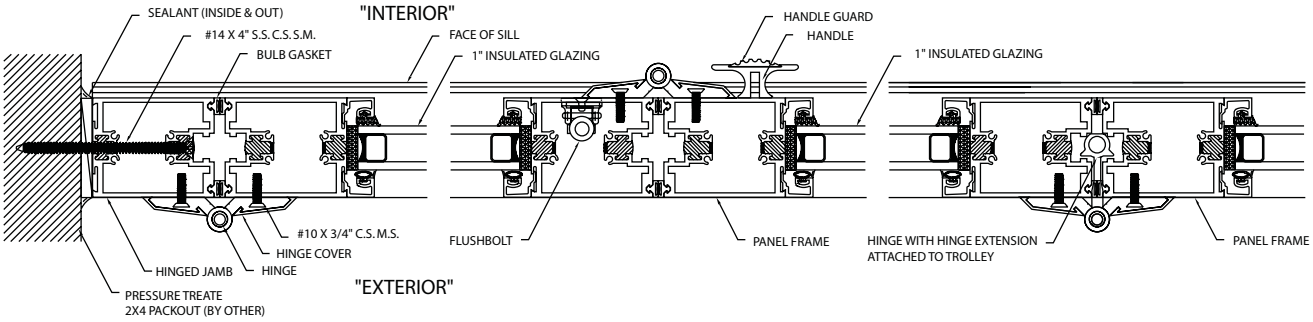

Detail # 5

Unit Section at Unhinged Jamb

Sheetrock® Gypsum Panels

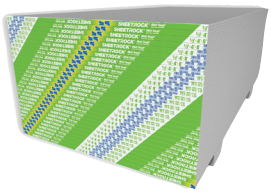

Mold Tough™ Regular and Firecode® Cores

Quality interior wall and ceiling panels with moisture and mold resistance

- Score and snap easily; no special handling required
- UL Classified as to fire resistance, surface burning characteristics and noncombustibility
- Install and finish as easily as standard drywall

Description

Sheetrock® brand Mold Tough™ gypsum panels have a noncombustible, moisture- and mold-resistant gypsum core that is encased in moisture- and mold-resistant, 100 percent recycled green face and brown back papers. The panels feature tapered long edges for easy finishing. The 5/8″ Firecode® and 1/2″ Firecode C Core panels are UL Classified for fire resistance (Type X).

Limitations

1. Avoid exposure to sustained temperatures exceeding 125 °F (52 °C).
2. Avoid exposure to excessive, repetitive or continuous moisture before, during and after installation. Eliminate sources of moisture immediately.
3. Not suitable for use in high-moisture areas such as tub and shower enclosures, gang showers and other areas subject to direct water exposure.
4. Non-loadbearing.

Finishing and Decorating

For high-quality finishing results, USG recommends the following products:

- Sheetrock® ready-mixed joint compounds
- Sheetrock® setting-type joint compounds
- Sheetrock® joint tape
- Sheetrock® First Coat primer
- Sheetrock™ paper-faced metal bead and trim
- Sheetrock® Tuff-Hide™ primer-surfacer

Painting products and systems should be used which comply with recommendations and requirements in Appendixes of ASTM C840. For priming and decorating with paint, texture or wall covering, follow manufacturer's directions for materials used.

All surfaces, including applied joint compound, must be thoroughly dry, dust-free, and not glossy. Prime with Sheetrock First Coat primer or with an undiluted, interior latex flat paint with high-solids content. Allow to dry before decorating.

To improve fastener concealment, where gypsum panel walls and ceilings will be subjected to severe artificial or natural side lighting and be decorated with a gloss paint (egg shell, semi-gloss or gloss), the gypsum panel surface should be skim coated with joint compound. This equalizes suction and texture differences between the drywall face paper and the finished joint compound before painting. As an alternative to skim coating, or when a Level 5 finish is required, use Sheetrock Tuff Hide™ primer-surfacer.

Product Data

Size: Panels are 1/2″ (12.7 mm) or 5/8″ (15.9 mm) thick x 4′ (1218 mm) wide and available in 8′-12′ (2438-4267 mm) lengths.

Weight: Regular: 1/2″ (12.7 mm) – 1.6 lbs/sf; Firecode C Core: 1/2″ (12.7 mm) – 1.9 lbs/sf; 5/8″ (15.9 mm) – 2.2 lbs/sf (11.7 kg/sm)

Labeling: Each 5/8″ Firecode Core and 1/2″ Firecode C Core panel bears the Underwriters Laboratories, Inc. label mark as evidence of UL Classifications for fire resistance, surface burning characteristics and noncombustibility.

Test Data

Moisture and Mold Resistance

Per ASTM C473, the average water absorption for panels is not greater than 5 percent by weight after two-hour immersion.

In independent lab tests conducted at the time of manufacture per ASTM D3273, "Standard Test Method for Resistance to Growth of Mold on the Surface of Interior Coatings in an Environmental Chamber," the panel score was 10.

This ASTM lab test may not accurately represent the mold performance of building materials in actual use. Given unsuitable project conditions during storage, installation or after completion, any building material can be overwhelmed by mold. To manage the growth of mold, the best and most cost-effective strategy is to protect building products from water exposure during storage and installation and after completion of the building. This can be accomplished by using good design and construction practices.

Maximum Frame Spacing Drywall Construction

Direct Application	Panel thickness(1)		Location	Application method(2)	Max. frame spacing o.c.	
	in.	mm			in.	mm
Single-Layer	1/2	12.7	ceilings	perpendicular	24(5)(6)	610
				parallel(4)	16	406
			sidewalls	parallel or perpendicular	24	610
				parallel(4)	16	406
	5/8	15.9	ceilings(6)	perpendicular	24	610
			sidewalls	parallel or perpendicular	24	610
Double-Layer	1/2 and 5/8	12.7 and 15.9	ceilings	perpendicular or parallel	24(8)	610
			sidewalls	perpendicular	24(8)	610

(1) 5/8″ thickness is recommended for the finest single-layer construction, providing increased resistance to fire and transmission of sound; 1/2″ for single-layer application in new residential construction and remodeling; and 3/8″ for repair and remodeling over existing surfaces. (2) Long edge position relative to framing. (3) Not recommended below unheated spaces. (4) Not recommended if water-based texturing material is to be applied. (5) Max. spacing 16″ if water-based texturing material is to be applied. (6) If 1/2″ SHEETROCK® interior ceiling board is used in place of gypsum panels, max. spacing is 249 o.c. for perpendicular application with weight of unsupported insulation not exceeding 1.3 psf., 16″ o.c. with weight of unsupported insulation not exceeding 2.2 psf. (7) Adhesive must be used to laminate 3/8″ board for double-layer ceilings. (8) Max spacing 16″ o.c. if fire rating required.

Compliance

SHEETROCK MOLD TOUGH gypsum panels comply with ASTM C1396.
Per ASTM E136, noncombustible gypsum core.
Per ASTM E84, flame spread is 15; smoke developed is 0.

Submittal Approvals

Job Name	
Contractor	Date

Product Information
See usg.com for the most up-to-date product information.

Trademarks
The following trademarks used herein are owned by United States Gypsum Company or a related company: DURABOND, EASY SAND, FIRECODE, MOLD TOUGH, SHEETROCK, TUFF-HIDE, USG.

Notice
We shall not be liable for incidental and consequential damages, directly or indirectly sustained, nor for any loss caused by application of these goods not in accordance with current printed instructions or for other than the intended use. Our liability is expressly limited to replacement of defective goods. Any claim shall be deemed waived unless made in writing to us within thirty (30) days from date it was or reasonably should have been discovered.

Safety First!
Follow good safety and industrial hygiene practices during handling and installation of all products and systems. Take necessary precautions and wear the appropriate personal protective equipment as needed. Read material safety data sheets and related literature on products before specification and/or installation.

Manufactured by
United States Gypsum Company
550 West Adams Street
Chicago, IL 60661

800 USG.4YOU (874.4968)
usg.com
getmoldfacts.com

WB2390/rev. 3-07

GEM e2 Specifications

Curb Weight	1,120 lbs
GVW	1,850 lbs
Payload Capacity (options + passengers + cargo)	730 lbs
Length	99"
Height	70"
Width	55"
Wheelbase	72"
Turning Circle	24 ft
Tires	12-inch Street-rated
Range	Up to 35 miles
Top Speed	25 mph

GEM e2 Standard Features

- Six 12-volt flooded electrolyte batteries

GEM e4 Specifications

Curb Weight	1,280 lbs
GVW	2,200 lbs
Payload Capacity (options + passengers + cargo)	920 lbs
Length	128"
Height	70"
Width	55"
Wheelbase	102"
Turning Circle	32 ft
Tires	12-inch Street-rated
Range	Up to 30 miles
Top Speed	25 mph

GEM e4 Standard Features

- Six 12-volt flooded electrolyte batteries
- Sunroof

GEM e6 Specifications

Curb Weight	1,560 lbs
GVW	3,000 lbs
Payload Capacity (options + passengers + cargo)	1,440 lbs
Length	162"
Height	71"
Width	55"
Wheelbase	133"
Turning Circle	39 ft
Tires	13-inch Street-rated
Range	Up to 30 miles
Top Speed	25 mph

GEM e6 Standard Features

- Six 12-volt maintenance-free gel batteries
- Sunroof
- Scuff Guards
- Right Hand Mirror
- Mud Guards
- Grab Handles

GEM e6 with "S" Package

- Nine 8-volt maintenance-free gel batteries
- 39" x 48" flat bed with a 440 lb cargo capacity

2007 SPECIFICATIONS & DETAILS

Safety

- Automotive-style, three point safety belts.
- 10-inch*, 12-inch, or 13-inch** street-rated tires.
- Quartz-halogen headlamps with a 20-second safety delay after vehicle is turned off, front and rear turn signals, high-mount rear brake and taillights.
- Laminated, tinted automotive safety glass with windshield wiper.
- Structural composite and thermoplastic body panels.
- Dual upper hand grips (optional) and lower seat rails.
- Rear and side reflectors.
- Rearview and dual exterior mirrors (driver's side standard, passenger side optional).

Design

- The GEM e2, eS, eL and eL XD seat two occupants with bench-style seating using molded-foam cushions covered by marine grade UV-stable vinyl coverings. The GEM e4 seats four occupants with front bucket seats and a rear bench seat. The GEM e6 seats six occupants with front and middle-row bucket seats and a rear bench seat.
- Four-wheel automotive-style hydraulic brakes and parking brake.
- Dual A-arm front independent suspension with coil over shock.
- Automotive rack-and-pinion steering.
- Welded aluminum space-frame using custom aluminum-alloy extrusions.

Technology

- Heavy-duty DC motor with continuous 5 horsepower rating and 12 horsepower peak during acceleration and hill climbing.
- Front-wheel drive with speed reducer and integral differential.
- Solid-state custom motor controller with under and over voltage detector, regenerative braking, motor thermal protection and top speed regulation.
- Six 12-volt flooded electrolyte batteries are standard on the GEM e2, e4, eS, and the eL. Six 12-volt maintenance-free gel batteries are standard on the GEM e6 and nine 8-volt maintenance-free gel batteries are standard on the GEM e6 with the "S" Package and the GEM eL XD.
- On-board 72-volt DC charger that plugs into standard 110-volt AC 15-amp outlet.

NEW STANDARD FEATURES FOR 2007

Reduced Steering Effort and Turning Circle Diameter

New steering system will reduce the amount of effort for steering by 36 %. The new system also reduces turning diameter.

Parking Brake Indicator

A lighted symbol appears in the vehicle's electronic driver's display when the parking brake is engaged. Additionally, when the parking brake is engaged, the vehicle is unable to move.

Turn Signal Reminder

When a turn signal is left in an "on" position, a reminder will begin to sound after 45 seconds to notify the driver the signal has not been turned off.

*GEM e2 model only.
**GEM e6 and GEM eL XD models only.

This product meets ENERGY STAR® requirements with optional Low-E glass & argon gas added. Test results are shown below.

Back to Previous Page

ALEX SERIES CASEMENT

FEATURES

AVAILABLE CONFIGURATIONS

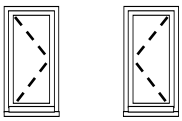

Click here for Standard Sizes

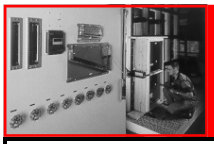

Test results

U-Value w/Low-E	0.29
R-Value w/Low-E	3.45
Air Infiltration (Tested @ 25 MPH)	0.02
CRF (Condensation Resistance Factor)	55
PSF (Water Resistance Test Pressure)	12.0
Solar Heat Gain Coefficient	.33

FRAME

1. Fusion welded frame is guaranteed for life not to separate or crack.
2. 2 1/4" frame depth
3. 0.065" wall thickness of vinyl
4. White vinyl is of the highest grade: Pure vinyl, not reground.
5. Maintenance free vinyl won't chip, rot, or crack.

SASH

1. Fusion welded sash is guaranteed for life not to separate or crack.
2. Sash swings out
3. 0.065" wall thickness of vinyl
4. White vinyl is of the highest grade: Pure vinyl, not reground.
5. Maintenance free vinyl won't chip, rot, or crack.

HARDWARE

1. Single point locking system
2. Award winning Truth® hardware

GLASS

1. 3/4" insulated glass sealed with patented DuraSeal® insulant.

SCREEN

1. Full screen with aluminum frame with fiberglass mesh

OPTIONS

1. Beige vinyl
2. Low-E glass
3. Bronze or Grey tinted glass
4. Obscure Glass for private areas (such as bathrooms)
5. Tempered Glass for increased safety
6. Argon gas
7. Internal or simulated divided lites
8. Aluminum screen wire
9. Egress Hardware
10. Extension jambs (vinyl or wood) (factory applied)
11. Mate with operable units, fixed units, and Geometric shapes from the Alex series
12. Bays, bows and multiple units

SENTRY II WLS POWER WINDOW SYSTEMS

Introducing Truth's next generation of power window systems... Sentry II WLS® for windows and light skylights. Based on the powerful and reliable mechanics from our previous motorization system, we've added a new digital electronics package with built in power conversion. This new Sentry II WLS system truly takes over where Truth's Sentry 2000® left off.

The new electronics package provides many new features to enhance a homes comfort and its owner's peace of mind.

- **Retrofits** onto casement and awning windows and light skylights operated with a hand crank manufactured by Truth Hardware (see Truth Tips). The motor system drives the same input the handle is attached to.
- **Power conversion** built right into the wall mounted control package which accepts direct connection of line voltages from 100 to 240 VAC at 47 to 440 Hz. No more transformers to complicate and add expense to the installation.
- **Power Blind System compatible.** Centralized power window system control is now possible with Sentry II's ability to accept and control most 24 VDC power blind systems. The Sentry II's remote and wall switch can be used to control both window and blind motors for convenient, centralized control.
- **Power Protected Memory** eliminates the need to "reset" or retrain the motor after a power outage. Once the installation is complete the motor never needs further service or adjustments – even after prolonged power outages!
- **RF remote** compatibility built into all motor control packages as a standard feature. Simply order the optional remote to add new and exciting control capability for the homeowner.
- **Rain Sensor** - standard with all kits, automatically closes the window or skylight at the first sign of moisture. Corrosion resistant sensor decreases maintenance cleaning requirements and extends service life.
- **No special preparation** is required by the window or skylight manufacturer. The kits are suitable for new construction or retrofit applications. Please consult with your electrical contractor for a retrofit evaluation.

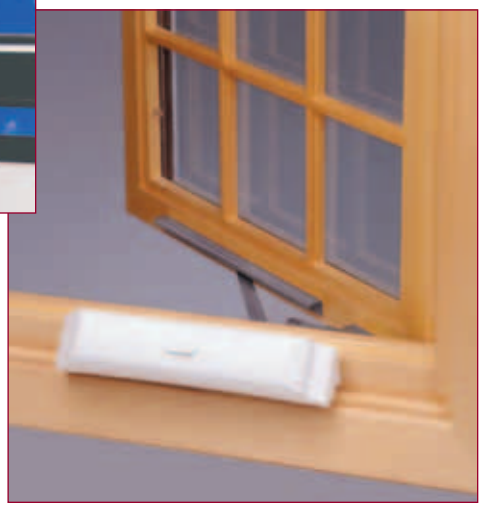

- **ETL Listed and CE Approved.** Meets all requirements for Class II installations.
- **Safety** - Automatic motor reversal has been engineered into the system which is intended to reverse the motor should an obstruction stop the window while closing. In addition, a screen interlock is provided which, when properly installed, electrically disconnects the motor when the screen is removed. These features are intended to help prevent personal injury which could result from reaching into the window area during its operation.
- **Motorized Sash Locks** are available for use with the WLS system for casement and awning windows. See Truth's Casement and Awning Sash Lock section for complete details.
- **Building Automation Systems** can easily be tied into the control electronics for virtually limitless ventilation possibilities.

SENTRY II WLS CAPACITY

- When used on light skylights, Truth's Sentry II WLS is load rated at 40 lbs at the chain. This equates to a total skylight hatch weight of 80 lbs.
- When used on casement windows, the Sentry II WLS is designed to work on all window systems meeting the AAMA-101 hardware load requirements. (See Truth Tips)
- When used on awning windows, the Sentry II WLS is designed to work on awning windows with a properly sized counter-balance hinge (See Truth Tips) and operator. (Consult awning operator specifications).

CONTROL OPTIONS

The Sentry II WLS kit comes with a standard wall control panel. The same control panel can also accept and control most commercially available 24 VDC mini blinds (not provided by Truth Hardware). The panel also provides feedback to the user via a status light (LED). This small LED shows when the motor is running, or if there are any problems during window or skylights operation.

The optional RF **Hand Held Remote** is available which adds even more flexibility and convenience to a homes windows or skylights.

REMOTE FEATURES INCLUDE:

- **Infinite Number** of windows & skylights can be controlled with a single remote.
- **9 Zones** or "unit codes" are available to allow units to be controlled in groups and organized to a users needs.
- **Motorized Blinds** (supplied by others) can be controlled with the same remote.
- **Control windows and skylights** from one remote – The Sentry II HS

(for large/heavy skylights) uses the same remote as the Sentry WLS for coordinated ventilation throughout the entire home or building.

- **Built in Thermostat** allows windows and skylights to open and close together, to coordinate a comfortable interior temperature. Takes advantage of true "chimney effect" cooling to reduce energy demands.
- **Rolling Code Technology** proven in garage door openers is built into every remote to provide high security and peace of mind.

WARRANTY: The Sentry II family of products is warranted for one year against defects in materials and workmanship on all electronic and mechanical components. This warranty only covers electrical products that are used to drive manual hardware systems (operators and hinges) manufactured by Truth Hardware.

CONSUMER NOTICE:

The Sentry II WLS power system must be installed by a qualified electrician.

PRODUCT APPLICATION ASSISTANCE:

If you need assistance with product configurations to meet your needs, please visit our website at www.truth.com. Under the "Technical Support" tab you will find all of the technical information needed to properly configure and specify all elements of an automated window installation, including installation instructions, pre-wiring and proper hardware requirements. You can also contact Truth's highly trained Technical Service Staff who can assist you with the selection of the appropriate hardware. These individuals are available during normal business hours (CST) at 800-324-4487.

ORDERING INFORMATION:

Ordering of the new Sentry II systems is much easier than in the past. All hardware necessary for mounting the system on either a window or skylight is now included in the same kit.

Special Note: Motor covers are ordered separately to help keep your inventory costs down. Sentry II motor kit packaging includes additional space so cover can be added which allows the manufacturer to supply a complete kit to the jobsite.

Sentry II WLS for windows and light skylights

Order 1 each per window:
43.51.00.002 - Sentry II WLS System
12490.XX - Cover (.xx denotes finish code)
Order 1 Hand Held Remote (optional):
43.53.00.002 - Hand Held RF Remote

Finish Codes: The WLS cover is available in .02 Black, .03 Bronze, .23 Chestnut Bronze, .24 Beige, .32 White, & .78 White.

If you are applying the Sentry II to a Pella brand window you must order the following items which include special hardware and instructions.

Order 1 each per window:
43.54.00.002 - Sentry II WLS System - Pella
12490.XX - Cover (.xx denotes finish code)
Order 1 Hand Held Remote (optional):
43.53.00.002 - Hand Held RF Remote

TRUTH TIPS:

1. Truth Hardware does not recommend the use of the Sentry II WLS on any casement window system that does not meet AAMA 101 hardware load requirements. All hardware and motor system warranties are void if the window system does not meet these guidelines.

2. Awning windows must be equipped with a properly sized counter balance hinge such as Truth Hardware's 13 series or 34 series 4-bar hinges. If an awning window is specified with butt (or continuous) hinges, a skylight operator and motor system must be used. All hardware and motor system warranties are void if these guidelines are not followed. (See Tech Notes).

3. Unless otherwise specified, the Sentry II WLS power window system is designed to operate any properly sized rotary hardware and hinge system manufactured by Truth Hardware. Use of the Sentry II WLS motor system on windows or skylights with manual hardware manufactured by companies other than Truth Hardware is at your own risk. For verification, look for the Truth logo/name stamped on the hinge and operator arm, or consult with the window manufacturer. If your hardware is not manufactured by Truth Hardware, contact Truth's Technical Service Department for available options at 800-324-4487.

4. The Sentry II WLS system is rated for use in indoor applications only.

5. The Sentry II WLS power skylight system is designed to be used on skylight operators that lift to open and pull to close in the center of the skylight. Therefore, the stiles of the skylight panel must be rigid enough in the closed position to ensure proper corner pull-in for a weather tight seal and rigid enough in the open position to provide proper skylight stability when supported at a single center point. The wider the skylight is, the more significant this issue can become. For more assistance, contact Truth Hardware Technical Services.

6. The Sentry II WLS requires 1 amp of 120 VAC.

INCLUDE TRUTH SPECS IN YOUR NEXT SKYLIGHT PROJECT

Motorized system for skylights (not exceeding 80 lbs), awning or casement windows. Mounting should accommodate wood, PVC or metal skylights and windows. Motorized system shall replace the handle on crank type skylight, casement or awning window operators manufactured by Truth Hardware. The motor drive to be constructed of a high pressure zinc die cast housing, containing hardened steel drive gears and a high torque 24 volt DC motor. Interchangeable drive adapter allows the system to be compatible with all Truth operators and many other window hardware systems not manufactured by Truth (contact Truth Technical Services for a list of compatible hardware). Mounting hardware to be provided to accommodate a wide range of window profile shapes and materials. Unit to be available with a decorative plastic cover which allows convenient access to mechanical components and easy installation. The control system is to be supplied with standard line voltages from 100 to 240 VAC at 47 to 440 Hz. (no transformer required). The wall mounted motor control is to come complete with its own receptacle box and cover plate. Motor system kit shall include: motor drive, decorative cover, wall control, and mounting hardware. This motor system shall be "Sentry II WLS" series as manufactured by Truth Hardware, Owatonna, MN.

FIG. 1 WLS MOTOR SYSTEM APPLIED TO AWNING/CASEMENT WINDOW

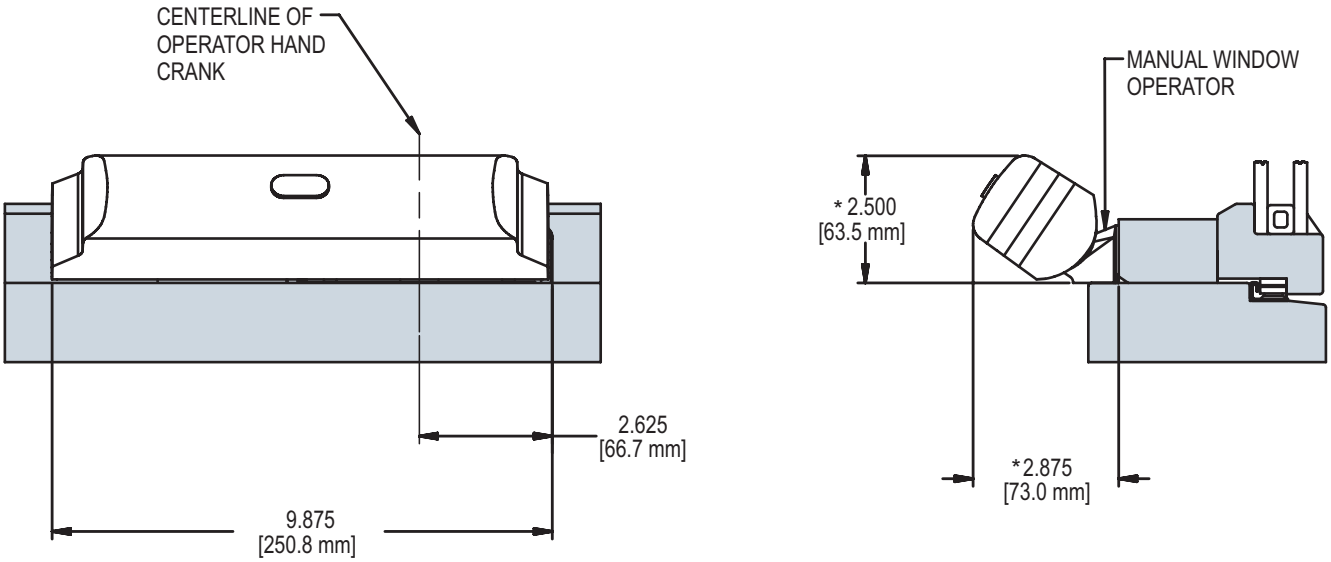

* THESE DIMENSIONS WILL VARY SLIGHTLY DEPENDING ON MANUAL OPERATOR USED

FIG. 2 WLS MOTOR SYSTEM APPLIED TO SKYLIGHT WINDOW

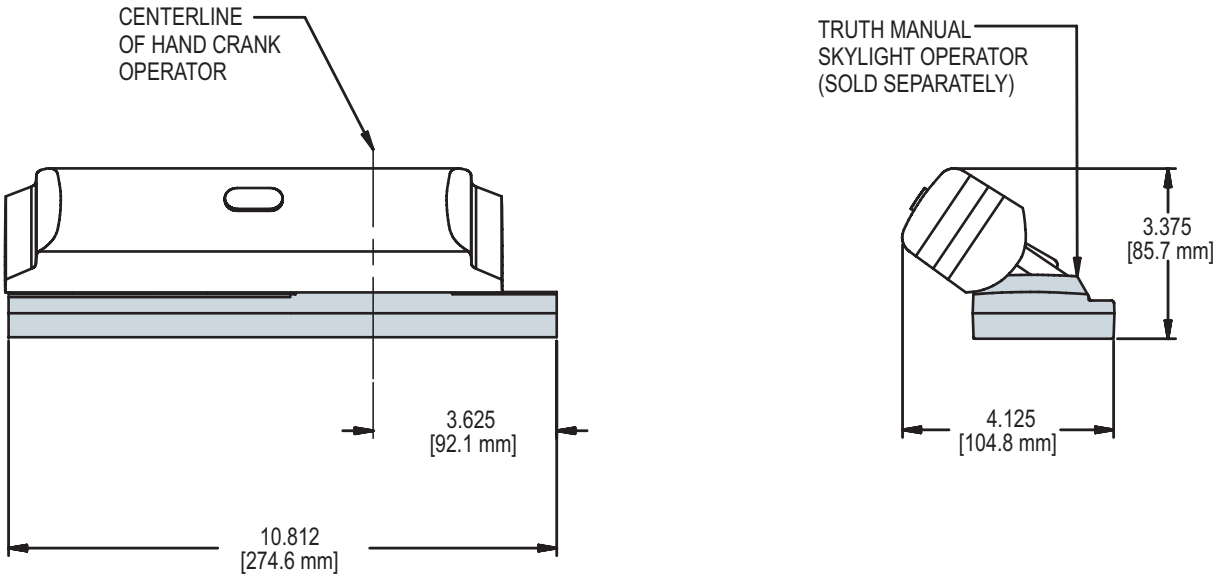

FIG. 3 SENTRY II PRE-WIRING FOR CASEMENT/AWNING WINDOWS

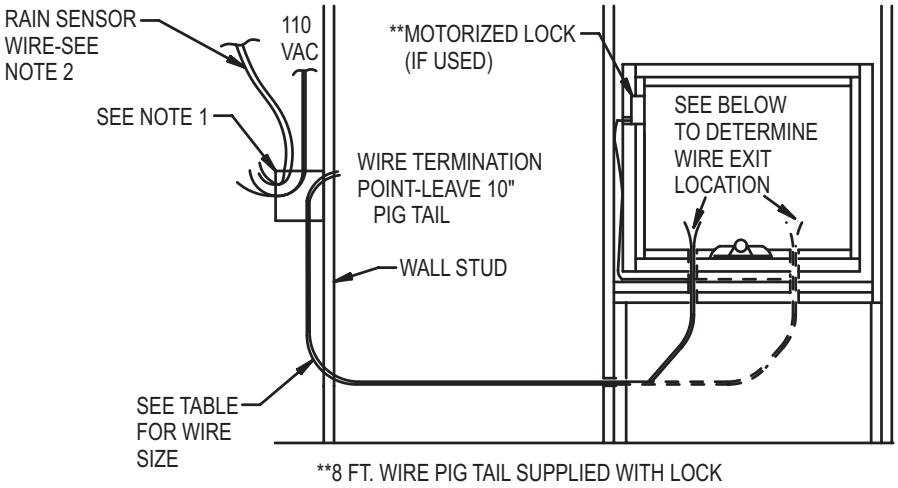

WIRE SIZE (CLASS 2)	TOTAL DISTANCE FROM CONTROL PANEL TO MOTOR	NUMBER OF CONDUCTORS		
		MOTOR ONLY	MOTOR + 1 LOCK	MOTOR + 2 LOCKS
18 AWG	50 ft (15m)MAX	2	4	6
14 AWG	100 ft (30m)MAX			
12 AWG	150 ft (60m)MAX			

SOLID CORE WIRE RECOMMENDED
REFER TO CLASS 2 CODES

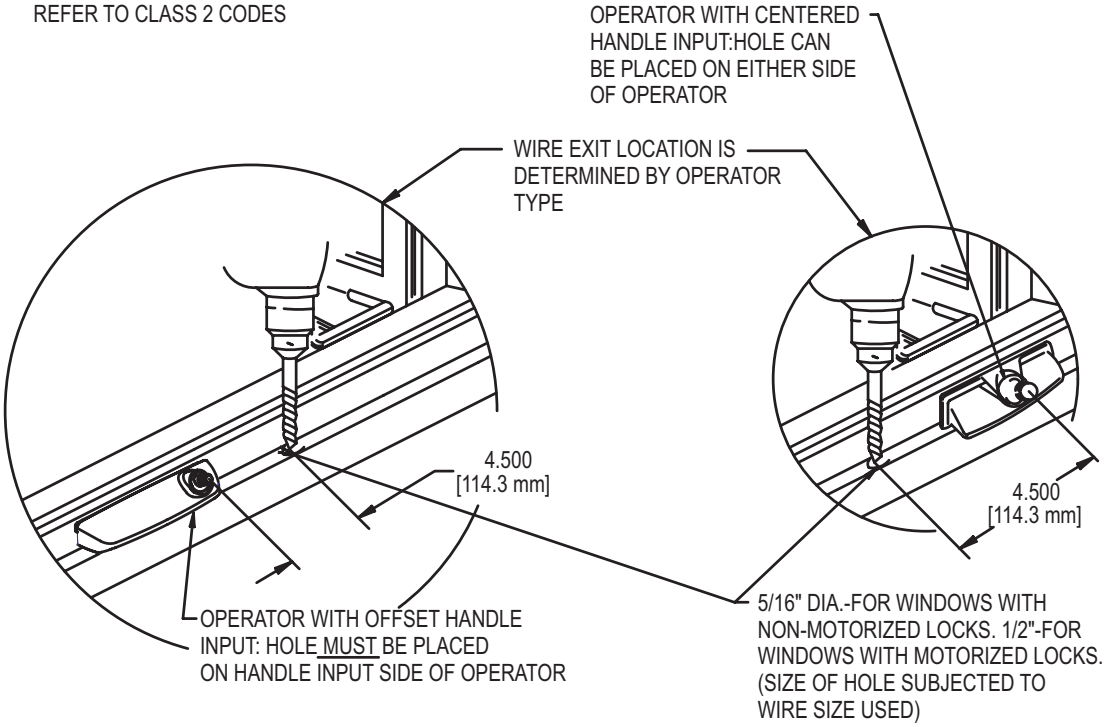

NOTE:

1. EACH POWERED WINDOW REQUIRES A CONTROL PANEL. CONTROL PANEL FITS A FINISHED WALL OPENING OF 3 7/8" WIDE BY 4 1/8" HIGH. (RECEPTICAL BOX IS SUPPLIED AS AN INTERGRAL PART OF THE CONTROL PANEL.) CONTROL PANEL CAN BE LOCATED IN A REMOTE LOCATION IF THE CONTROL PANEL IS NOT INTENDED TO BE THE PRIMARY MEANS OF CONTROL. (EXAMPLE: RF REMOTE CONTROL OF BUILDING AUTOMATION CONTROL SYSTEM)

2. RAIN SENSOR WIRE MUST BE 22 GAUGE TWISTED,SHIELDED PAIR

FIG. 4 SENTRY II WLS PRE-WIRING FOR SKYLIGHTS

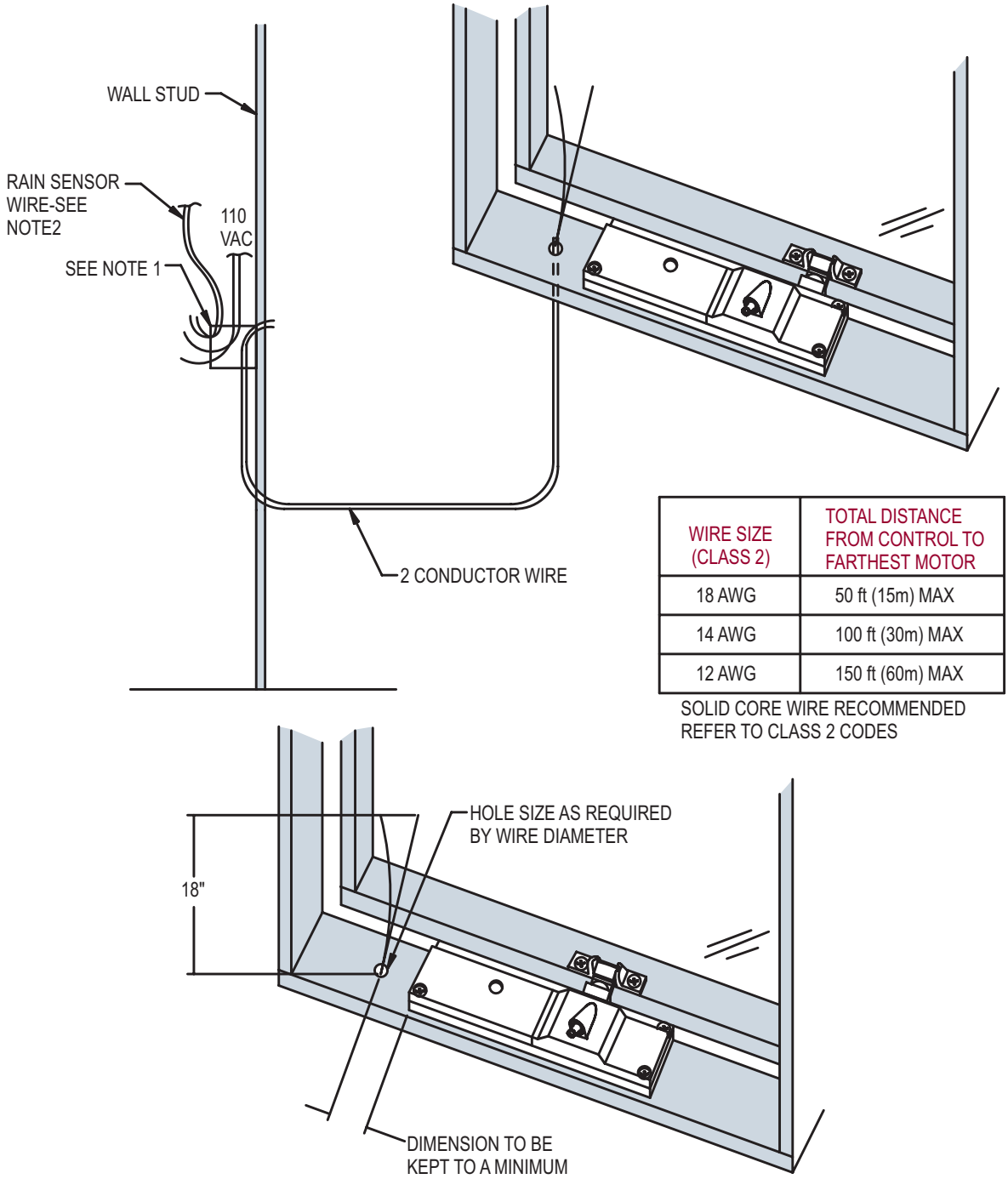

WIRE SIZE (CLASS 2)	TOTAL DISTANCE FROM CONTROL TO FARTHEST MOTOR
18 AWG	50 ft (15m) MAX
14 AWG	100 ft (30m) MAX
12 AWG	150 ft (60m) MAX

SOLID CORE WIRE RECOMMENDED
REFER TO CLASS 2 CODES

NOTE:

1. EACH POWERED SKYLIGHT REQUIRES A CONTROL PANEL. CONTROL PANEL FITS A FINISHED WALL OPENING OF 3 7/8" WIDE BY 4 1/8" HIGH. (RECEPTACLE BOX IS SUPPLIED AS AN INTEGRAL PART OF THE CONTROL PANEL) CONTROL PANEL CAN BE LOCATED IN A REMOTE LOCATION IF THE CONTROL PANEL IS NOT INTENDED TO BE THE PRIMARY MEANS OF CONTROL. (EXAMPLE: RF REMOTE CONTROL OR BUILDING AUTOMATION CONTROL SYSTEM)

2. RAIN SENSOR WIRE MUST BE 22 GAUGE TWISTED, SHIELDED PAIR

Home Automation, Inc.

Model 32A00-1

OmniTouch Touchscreen

User's Guide

Document Number 32R00-1 Rev A
August, 2003

DESCRIPTION

The Model 32A00-1 OmniTouch Touchscreen is a colorful “plug and play” touchscreen interface for HAI controllers. OmniTouch is self-configuring based on the programming of your HAI controller. Changes made on your system automatically show on the touchscreen, allowing you to maintain and reprogram your system remotely.

OPERATION

The touchscreen is designed with everything that is necessary for you to operate and program your HAI system.

In its normal state, the Home page is displayed which shows the day, date, time, current security mode (if applicable), and current outdoor temperature (if applicable). At the bottom of the display, the system status is shown. If all doors, windows, sensors, etc. are secure, no zones are bypassed, and if there are no troubles, the bottom line will show "SYSTEM OK" as seen below:

The Home page displays an icon for each function that you can perform from the touchscreen. According to your system configuration, not all icons may be visible (as shown above) if the option isn’t part of your system or if you don’t want a touchscreen to access those items.

Simply touch one of the icons to select the desired page.

Control:	Control units (lights, appliances, outputs, and flags), scenes, and all on/off
Security:	Arm/disarm security, emergency alarms, bypass/restore zones, and go to area
Button:	Activate Button (macro) programs
Temperature:	Control thermostats, temperature sensors, and humidity sensors
Status:	View status of lights, zones, and temperatures / view and edit programs
System:	View event log and command voice/text messages
Setup:	Configure touchscreen and controller, clean screen, and create programs

TOUCHSCREEN LED

The touchscreen LED is used to indicate whether the security system is currently armed or disarmed. If armed in any security mode, the LED is set to red. If the system is disarmed, the LED is set to green. The LED flashes when a Message is displayed.

LIST BOXES

Selectable items (such as units, zones, buttons, temperatures, etc.) are displayed in a list box. An item may be selected from a list box by simply touching the item in the list or by pressing the [up arrow] or [down arrow] buttons to scroll through list items. With each press, the next item is highlighted. Press [enter] to select the highlighted item.

Press the [page up] or [page down] buttons to scroll through pages (groups) of items. With each press, the next group of items is displayed with the first item in the list highlighted.

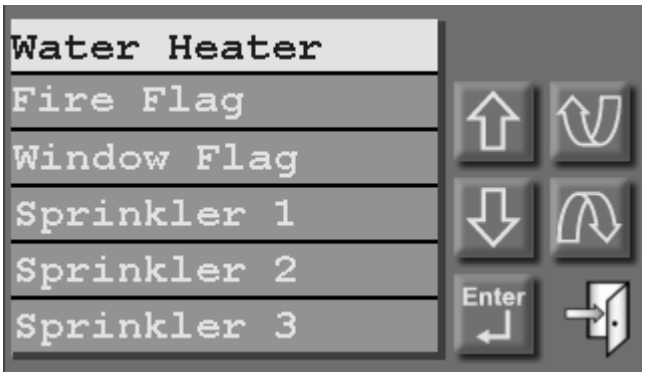

Press [up arrow] to move up one item in the list. If you are at the top item in the list, the [up arrow] will bring you to the last item on the previous page.

Press [down arrow] to move down one item in the list. If you are at the last item in the list, the [down arrow] will bring you to the top item on the next page.

Press [page up] to move up to the previous page (group of items in the list).

Press [page down] to move to the next page (group of items in the list).

Press [enter] to select the highlighted item.

Press [exit] to exit from the current page and return to the Home page.

You may press and hold the [up arrow], [down arrow], [page up], and [page down] buttons to quickly scroll through list items and pages.

SECURITY

If security is part of your automation system, the following information supplements the information in your controller owner's manual. Refer to your controller owner's manual for complete operating instructions.

Arming and Disarming

To arm or disarm the security system, from the Home page, touch the [Security] icon.

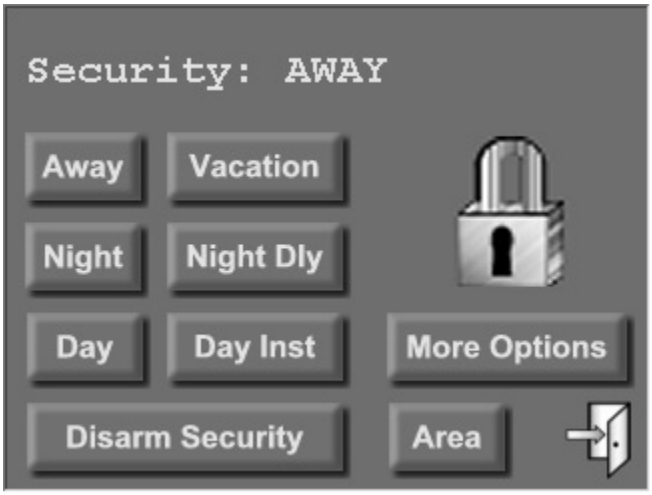

The top line on the "Security" page displays the current security mode.

If the system is disarmed and "Quick Arm" is enabled, simply touch the desired security mode button and the system will immediately begin arming.

To disarm security, arm security from one mode to another, or to arm from the disarmed state if "Quick Arm" is disabled, a code is required. After you touch the desired security mode or [Disarm Security] button, the "Keypad" page is displayed:

Enter your four-digit code. If you make a mistake, press the [Clear] button and start over or press the [exit] button to return to the previous page. After the last digit of a valid code is entered, the system will perform the desired task.

Auto Bypass

If "Auto Bypass" is enabled in your system, when you arm security, your system will automatically bypass any zones that are left open when the system is armed.

If "Auto Bypass" is disabled in your system, when you arm security and zones are left open, the touchscreen will display: "System Not Armed – Zone(s) Not Ready". Secure the open zone(s), and then press the [Retry] button; the system will immediately begin arming if all zones are secure.

Silencing Alarms

To disarm the security system after an alarm has tripped, or during the entry delay, simply press the [Disarm] button, then enter your four-digit code on the "Keypad" page. The [Disarm] key disarms the burglar alarm, resets emergency alarms, and silences all sirens and sounders.

Arming and Disarming other Security Areas

If your system is configured with multiple security areas, it is possible to arm other individual areas or all areas from the "Security" page.

Before selecting the desired security mode or [Disarm Security] button, first select the [Area] button. The "Area" list box is displayed with available security areas.

Select the desired area from the list box or select "All Areas" to arm or disarm all security areas.

After selecting the desired area, you return to the "Security" page where you must select the desired security mode or [Disarm Security] button.

After you touch the desired security mode or [Disarm Security] button, the "Keypad" page is displayed. In order to arm/disarm a different area, you must have a Master code or a code that is valid for the selected area. Likewise, to arm/disarm "All Areas", you must have a Master code or a code that is valid for all areas.

Even if “Auto Bypass” is enabled, the system will not arm another area if any zones in that area are left open. The touchscreen will display: “System Not Armed – Zone(s) Not Ready”. Secure the open zone(s) in the selected area(s), and then press the [Retry] button; the system will immediately begin arming if all zones are secure.

More Options

To bypass and restore zones, activate emergency alarms, and go to a different area, from the “Security” page, press the [More Options] button:

Emergency Keys

If enabled, emergency alarm conditions can be activated through the touchscreen. These conditions (Fire, Police, and Auxiliary) are initiated when the [Police], [Fire], or [Aux] button is pressed and held approximately 1-second. If enabled, the Emergency Keys are always armed.

GOTO

If your system is configured with multiple areas, it is possible to temporarily assign the touchscreen to a different area. All security and control commands will now operate on the selected area, just as if you were physically at a touchscreen or console assigned to that area. All status displays will show the status of the selected area.

To go to a different area, press the [GOTO] button. An “Area” list box is displayed. Select the area from the list box, and then enter a valid code for that area. After the last digit of a valid code is entered, the touchscreen will display the Home page for the selected area.

Use the [GOTO] button again to return to the area normally assigned to that touchscreen.

STATUS

The “Status” page displays the current status of various items in the system, zones, security mode, energy cost, outdoor temperature, the time of Sunrise and Sunset, and allows you to control, view, and edit programs for lighting and temperature devices. From the Home page, touch the [Status] icon:

The main “Status” page displays the time of Sunrise and Sunset for the current day, current security mode, energy cost, and outdoor temperature (if applicable). According to your system configuration, not all icons may be visible (as shown above).

Control and Temperature Status

Touch the [Control] icon or the [Temperature] icon to view the status of each control and temperature device connected to the system, to change the status of a device, to view all programs that control the current device, and to edit a selected program that controls the device.

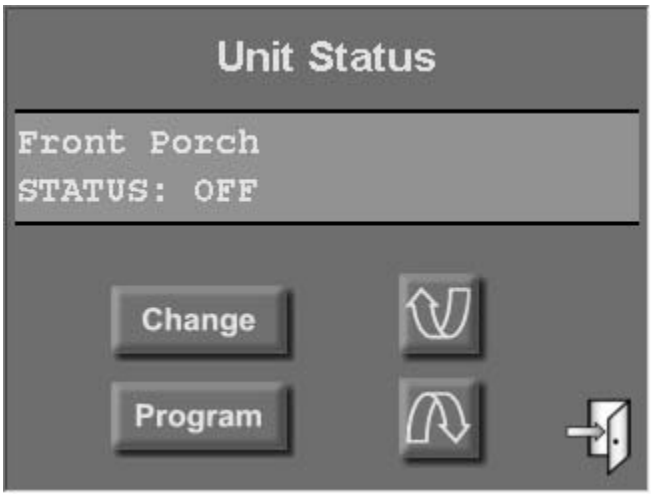

Press [page down] to display the next item and press [page up] to display the previous item. Press the [Change] button to change the status of the selected device.

To view all of the programs that control the selected device, press the [Program] button. To view or edit programs, a code is required. After the last digit of a valid code is entered, a list of programs that control the selected device is displayed:

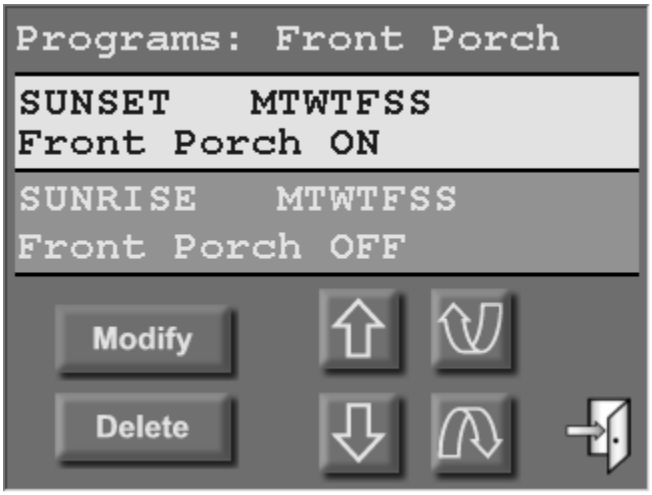

To modify or delete a program, highlight a program by simply touching the program in the list or by pressing the [up arrow] or [down arrow] buttons to scroll through programs. With each press, the next program is highlighted. Press the [page up] or [page down] buttons to scroll through groups of programs. With each press, the next group consisting of 2 programs is displayed, with the first program in the list highlighted.

Press the [Modify] button to modify (edit) the selected program using the "Program" pages (see "Program" in this document for information regarding constructing and editing a program).

Press the [Delete] button to delete the selected program. When pressed, a "Confirm Deletion?" page is displayed. Press the [Delete] button to confirm your choice to delete the program. Once pressed, the program will be permanently deleted from the system. If you choose not to delete the program, simply press the [exit] button in the lower-right corner.

Zone Status

Touch the [Zones] icon to view the current status of each zone. The display will show the zone name and the current status of the zone. Press the [page up] or [page down] buttons to scroll through groups of zones. Zones that are "secure" are displayed in green, zones that are "not ready" are displayed in red, and zones that are in "trouble" are displayed in yellow.

Test

Touch the [Test] icon to check the status of the battery, telephone, bell circuit, auxiliary fuse, and security zone loop readings. The pages look and operate similar to an HAI console. Refer to your controller owner's manual for complete operating instructions. When complete, press the [*] key to exit the "Test" page.

SETUP

From the Home page, touch the [Setup] icon. This will bring you to the "Setup" page. From the "Setup" page, touch the appropriate icon:

- [Screen Setup] – to configure the operating parameters of your touchscreen.
- [System Setup] – to configure operating parameters of the automation and security system and for advanced programming of the automated control and security functions.
- [Clean Screen] – to wipe clean the touchscreen display.
- [Program] – to create basic automation programs for lighting and temperatures.

TOUCHSCREEN SETUP

The "Touchscreen Setup" pages allow you to configure the operating parameters of your touchscreen. These items only affect the touchscreen from which you are currently operating.

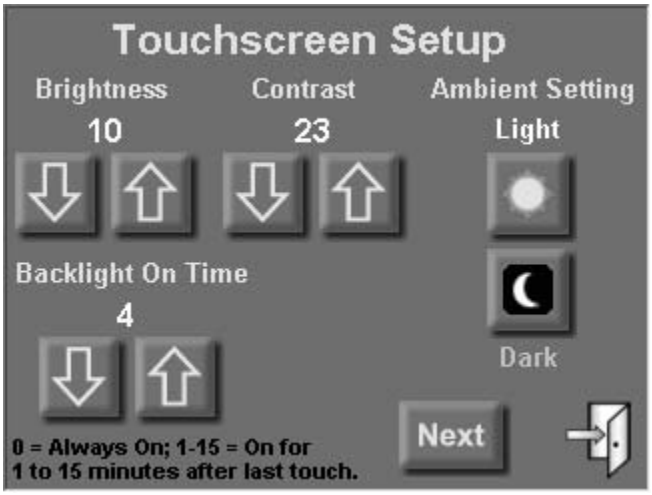

Brightness (0-15):	Adjusts the brightness level of the touchscreen display.
Contrast (0-31):	Adjusts the contrast level of the touchscreen display.
Ambient Setting:	Sets the "light" and "dark" ambient light levels (see "Ambient Setting" in this document for additional information).

Backlight On Time (0-15):	Sets the length of time the touchscreen display remains illuminated after the last time a button is pressed on the touchscreen. After the time has expired, the touchscreen display turns off. Simply touch anywhere on the screen and the display will immediately illuminate. A setting of “0” means the touchscreen is always illuminated (“0” is not a recommended setting).
[Next]:	Saves the current settings and displays more setup options.

Press the [up arrow] button to raise the current setting and the [down arrow] button to lower the current setting. When complete, press [Next] for more options or the [exit] button in the lower-right corner to save the settings and exit (back to the Home page).

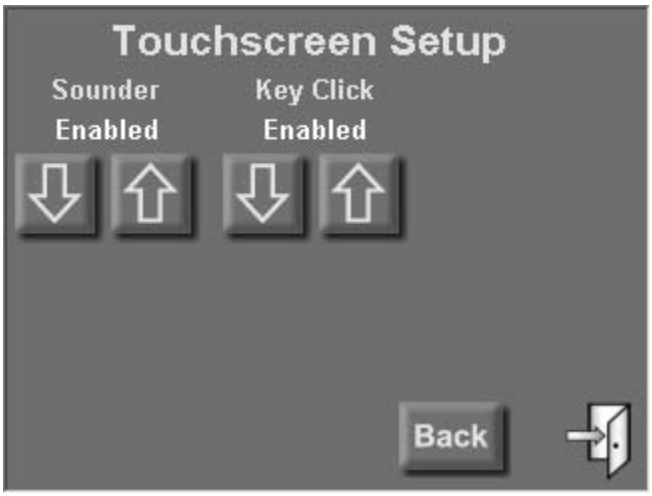

Sounder:	Enables or disables the touchscreen sounder. The sounder is used to alert you of errors, troubles, and messages, and emits tones upon entry and exit delays.
Key Click:	Enables or disables key clicks (a short tone) when buttons are pushed on the touchscreen.
[Back]:	Saves the current settings and returns to the previous setup page.

Press the [up arrow] button to enable the current option and the [down arrow] button to disable the current setting. When complete, press [Back] to return to the previous setup page or the [exit] button in the lower-right corner to save the settings and exit (back to the Home page).

Ambient Setting

The Ambient Setting is used to brighten the touchscreen display in an illuminated room and dim the touchscreen display in a dark room. When changing from a light setting to dark (e.g. the lights in the room are turned off), the touchscreen will maintain its "light" setting until 30 seconds after the room is darkened. When changing from a dark setting to light (e.g. the lights in a dark room are turned on), the touchscreen will immediately change to its "light" setting.

To set the "light" and "dark" settings for the ambient light sensor, go to the "Touchscreen Setup" page. With the room illuminated, set the "brightness" and "contrast" to the optimal viewable settings, then press the [Light] icon. Then, darken the room (e.g. turn off the lights or wait until the sun goes down) and set the "brightness" and "contrast" to the optimal viewable settings, then press the [Dark] icon.

Note: The "brightness" and "contrast" levels must be set higher for the ambient "light" setting, than the "brightness" and "contrast" levels set for the ambient "dark" setting.

After you exit the "Touchscreen Setup" page, when the light level reaches the "light" threshold, the display will illuminate to the brighter settings; when the light level reaches the "dark" threshold, the display will dim to the darker setting.

Once configured, to disable the ambient settings so that the screen is always at the same intensity, set the "brightness" and "contrast" to the desired levels, and then press the [Light] icon immediately followed by the [Dark] icon. By default, the ambient settings are disabled.

Note: In the event of an AC Power failure and the HAI controller is running on backup battery power, the touchscreen display will be lowered to its lowest viewable setting. Do not try to adjust the "brightness" and "contrast" levels. When AC Power is restored, the touchscreen display will automatically return to its correct settings.

SYSTEM SETUP

The "System Setup" pages allow you to configure operating parameters of the automation and security system and for advanced programming of the automated control and security functions. The "System Setup" pages look and operate similar to an HAI console. Refer to your controller owner's manual for complete operating and programming instructions.

CLEAN SCREEN

The "Clean Screen" page allows you to wipe clean the touchscreen display without activating any of the buttons. Clean the screen with a soft damp cloth. When complete, press and hold the "Restore" button for three seconds to return to the Home page.

PROGRAM

The “Program” pages allow you to construct and edit basic automation programs for lighting and temperatures. You are first prompted to enter a code. After the last digit of a valid code is entered, the “Edit Program” page is displayed:

From the “Edit Program” page, press the [Time] button to create a program/schedule that will activate at a specific time on the specified day(s):

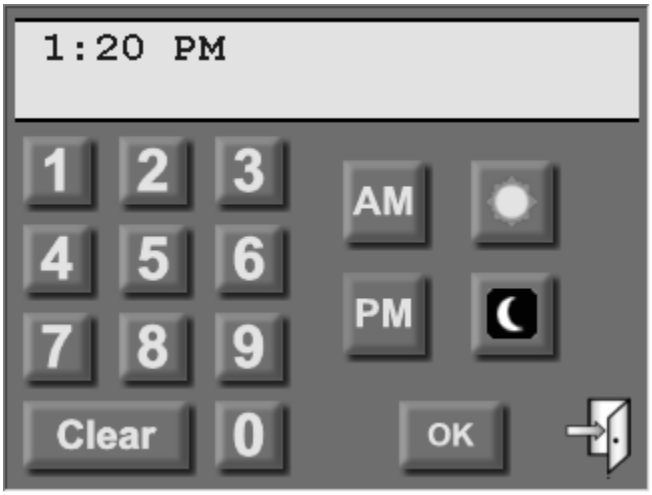

Enter the time (use either AM/PM or 24HR time format). Press the [sun] button for the “time of Sunrise” or the [moon] button for the “time of Sunset”. Once complete, press the [OK] button to save time. If you make a mistake, press the [Clear] button and start over.

Next, specify the day(s) in which the program will activate:

Press Monday-Sunday to select the specific day(s). After a day is selected, it may be deselected by pressing the respective button once again. The [Weekdays] button will select Monday-Friday and the [Weekends] button will select Saturday and Sunday. Once complete, press the [OK] button to save the day(s).

From the "Edit Program" page, press the [Security] button to create a program that is activated when the security mode changes to the specified mode.

Press the desired security mode button. Once complete, press the [OK] button to save the security mode. Note: The program will activate at the end of the "exit delay" (if applicable).

From the "Edit Program" page, touch the [Control] icon to create a program that controls a unit (i.e. light, appliance, output, or flag).

From the "Edit Program" page, touch the [Temperature] icon to create a program that controls thermostats, energy saver modules, temperature sensors, and humidity sensors.

Control and temperature devices are displayed in a list boxes. The device may be selected from a list box by simply touching the device in the list or by pressing the [up arrow] or [down arrow] buttons to scroll through list devices, then pressing [enter] to select the highlighted device.

Once selected, the appropriate command page is displayed for the selected device.

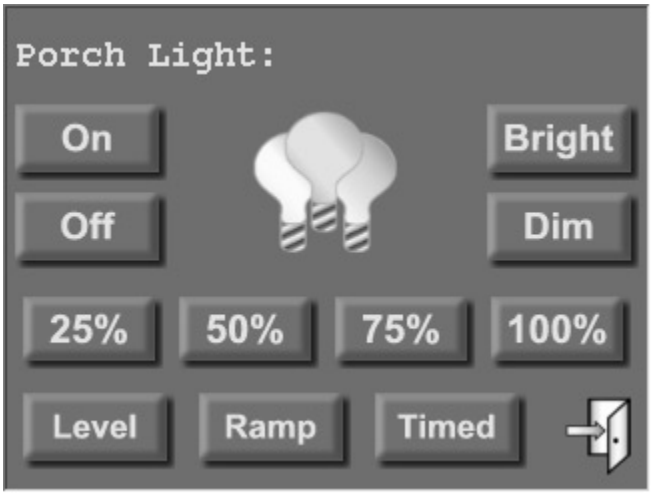

Specify the desired command for the selected device.

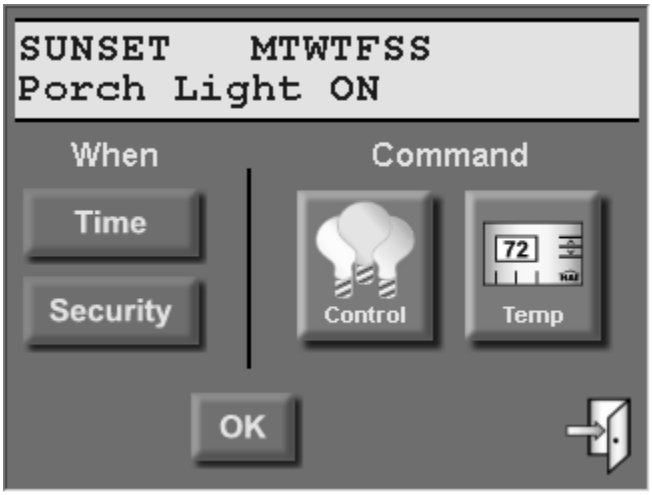

Press [OK] to save the displayed program or the [exit] button in the lower-right corner to cancel.

HOME AUTOMATION, INC.

Lumina and Lumina Pro
Lighting and Automation System

Quick-Start
Installation Guide

Document Number 44I00-1 Rev. 2.12
February, 2006

For complete operation and programming instructions, please download the following document(s) from the HAI web site:

44R00-1: Lumina Advanced Application Guide

44R00-2: Lumina Pro Advanced Application Guide

www.homeauto.com

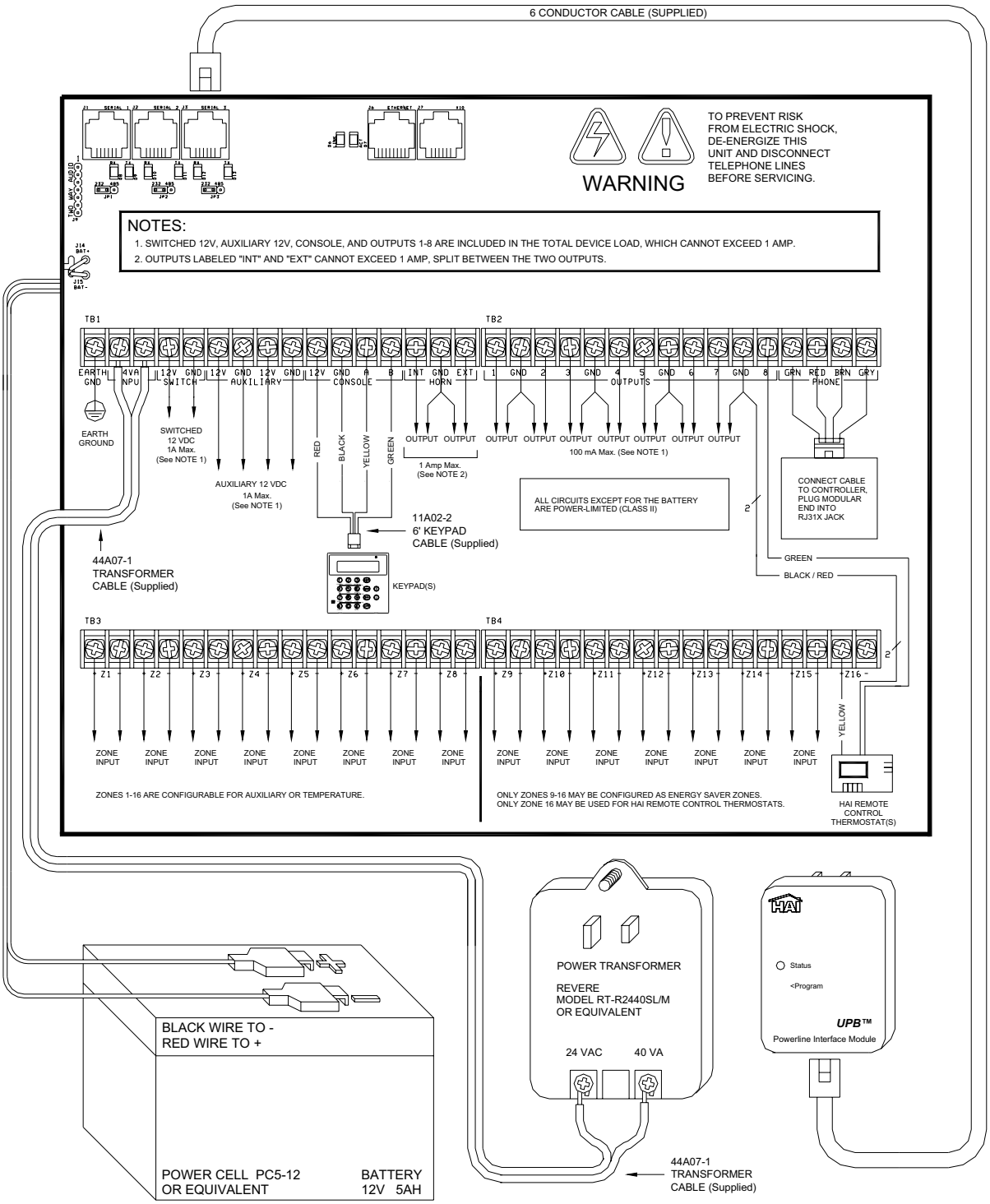

PLANNING

Before you start, the Lumina system should be planned as follows:

- Thoroughly review Appendix A “Understanding HLC” for an overview of an HLC system.
- Complete the worksheet(s) in Appendix B “HLC Planner” to plan the lighting scheme for each room.
- Give consideration to where the controller will go. Remember that it needs a duplex receptacle not controlled by a switch, preferably on its own circuit, within 5 feet of the controller.

INSTALLATION

1) Install HLC Switches and Controllers

Install the HLC Dimmers and Switches, 6-Button Room Controllers, and 8-Button House Controllers according to the instructions that came with each device.

2) Install the HLC Phase Coupler

Install the supplied HLC Phase Coupler (P/N: 39A00-1) according to the instructions that came with the unit.

3) Mount the Lumina Enclosure

Mount the Lumina enclosure securely to the wall in the selected location using screws and wall anchors, as appropriate.

4) Ground the Lumina Controller

GROUND THE LUMINA CONTROLLER'S "EARTH GND" TERMINAL TO A COLD WATER PIPE OR TO A 4-FOOT GROUND ROD TO PRESERVE ITS BUILT-IN TRANSIENT PROTECTION. USE 14 GAUGE WIRE. TRANSIENT PROTECTION WILL NOT WORK IF THE CONTROLLER IS NOT PROPERLY GROUNDED.

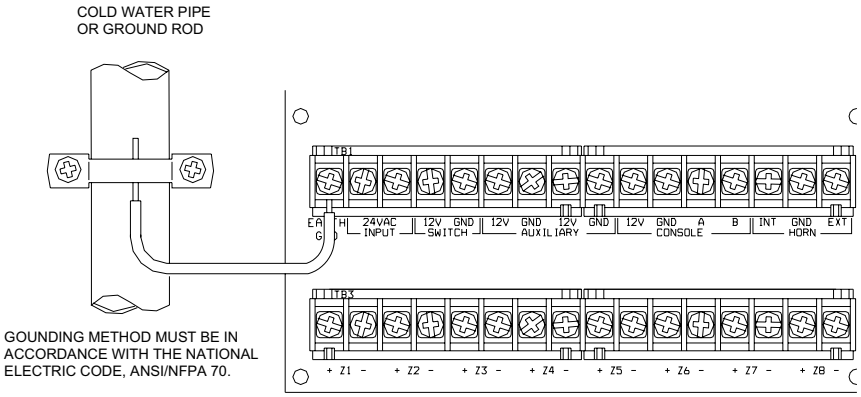

5) Connect the Powerline Interface Module (PIM) to the Lumina

Locate the supplied PIM (P/N: 36A00-1). Plug the PIM into a 120 VAC outlet. Plug one end of the supplied 6-conductor modular cable into the connector marked "J3" (SERIAL 3) on the Lumina controller and plug the other end into the modular connector on the PIM as shown.

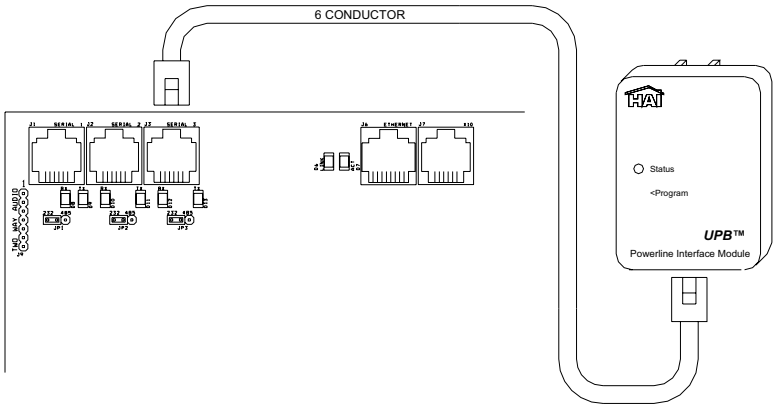

6) Install the Lumina Keypad

a) Connect the supplied keypad (P/N: 33A00-19) using the supplied 6' Keypad Cable (P/N: 11A02-2) as follows:

11A02-2 Cable	Lumina Controller
RED	CONSOLE 12V
BLACK	CONSOLE GND
YELLOW or WHITE	CONSOLE A
GREEN	CONSOLE B

b) Remove the keypad from the back plate by gently prying the unit open with a screwdriver.

c) Mount the back plate to the wall. Mounting holes are designed to fit on a single or double gang box, or directly to the wall.

d) Plug the cable into the connector on the keypad Printed Circuit Board (J1) as shown.

e) Snap the console face on to the back plate. Remove protective film from the LCD lens.

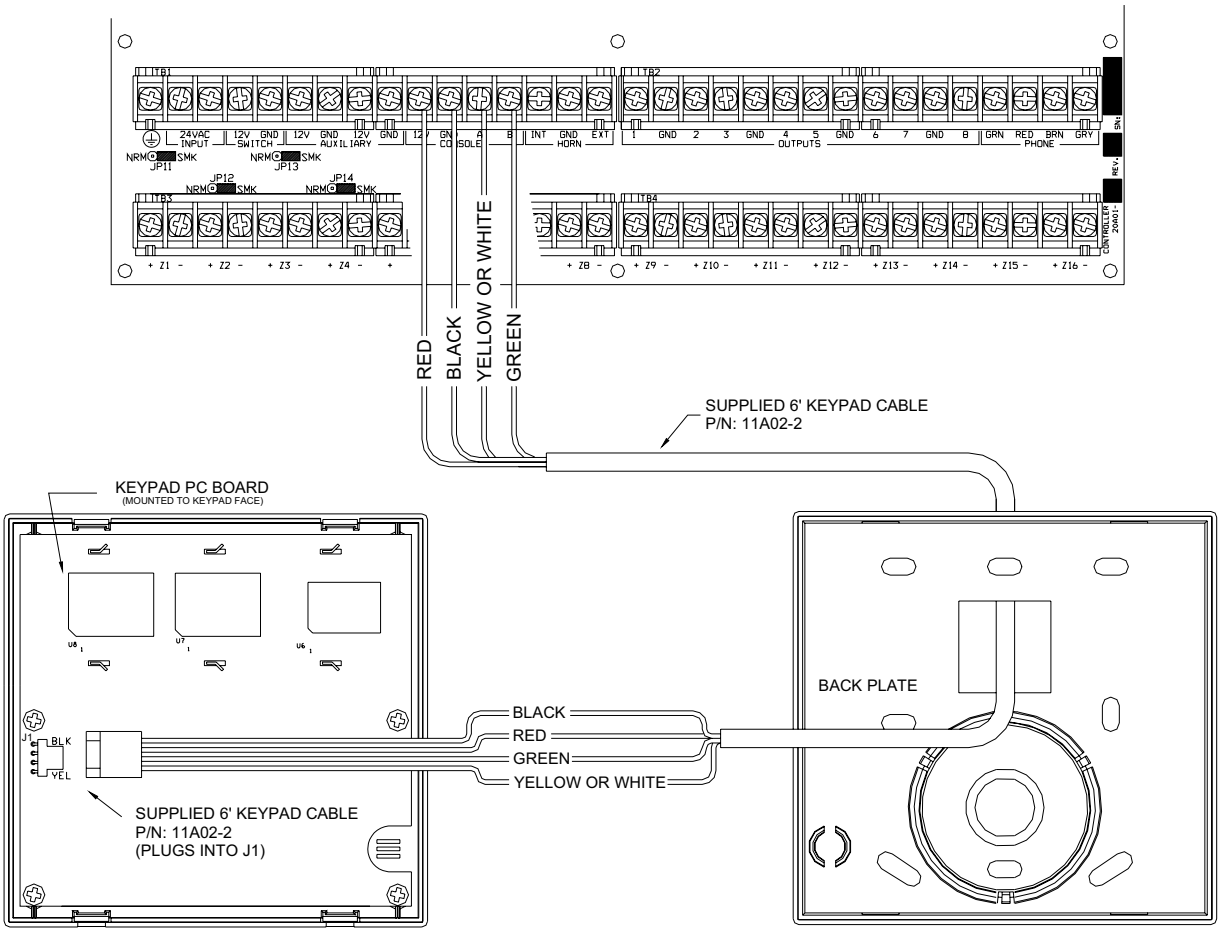

7) Connect the Power Transformer

a) Connect the supplied 24V, 40VA Power Transformer using the supplied Power Cable (P/N: 44A07-1).

b) Plug the Power Transformer into a 120 VAC outlet.

- The “AC ON” LED (D25) should illuminate.
- Within one minute, the “STATUS” LED (D24) should begin blinking at a rate of 1 blink per second.

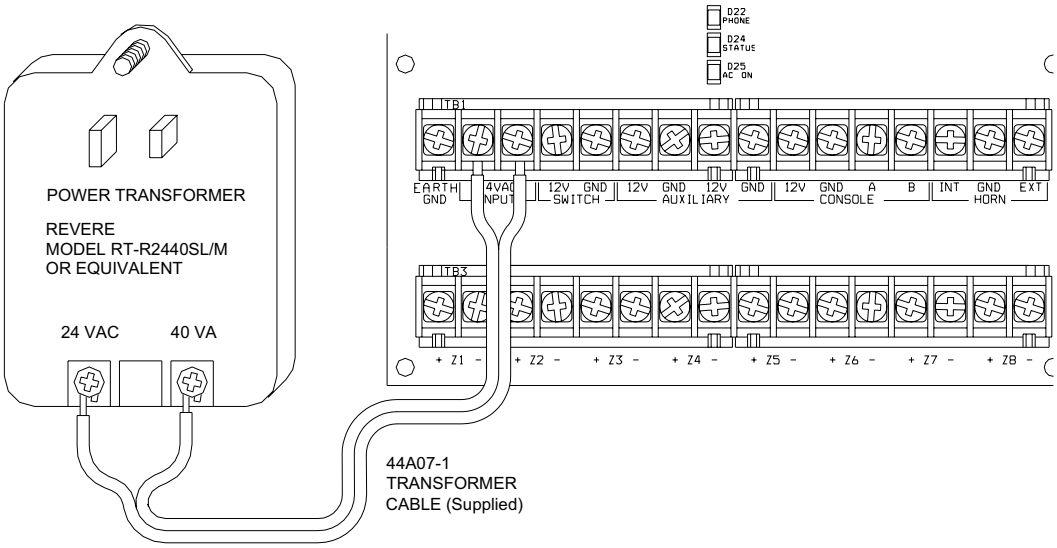

8) Connect the Battery

Unplug the Power Transformer to shut down the controller. Connect the black battery wire to the – (negative) battery terminal of the supplied battery. Connect the red battery wire to the + (positive) battery terminal. The controller should not start.

a) Plug in the Power Transformer. The system should start.

b) Unplug the Power Transformer. The system should continue to run on the battery (the “STATUS” LED will continue to flash).

c) Plug the Power Transformer back in and secure it to the outlet.

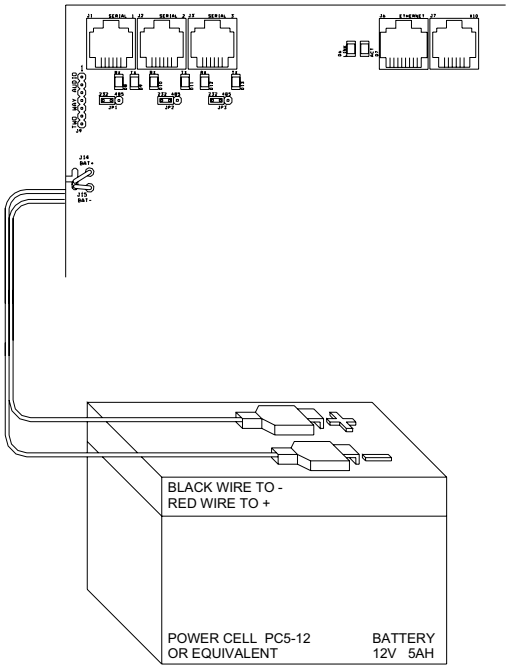

Reset Outputs

Outputs 1-8 are protected from an overload condition. If an overload condition occurs on an output, it will shut off (the output will supply 0V). When this occurs, the "Output Fault" (D26) LED (marked "A" below) will illuminate. To reset the output, remove the device causing the overload condition, then press the "Reset Outputs" (S1) Switch (marked "B" below).

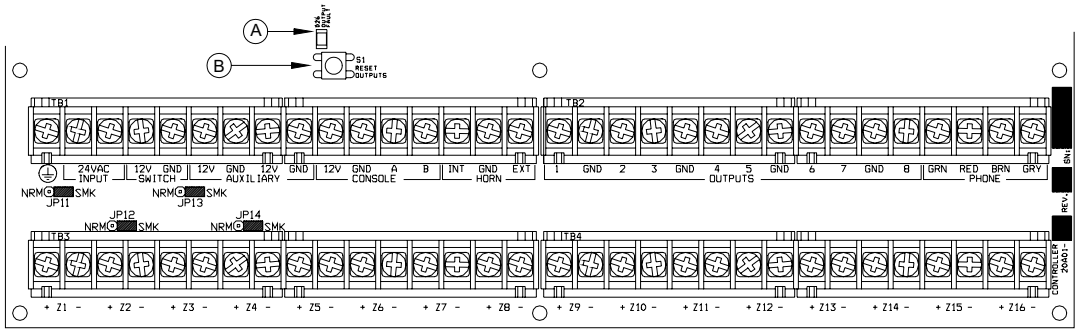

Temperature, Outdoor Temperature, and Humidity

When connected to the controller, the Model 31A00-1 (31A00-7 Extended Range) Indoor/Outdoor Temperature and Model 31A00-2 (31A00-8 Extended Range) Indoor/Outdoor Temperature and Humidity Sensor is used for sensing indoor temperature and/or reporting the relative humidity from 0 to 100 percent or for sensing the outdoor temperature and/or reporting the outdoor relative humidity. The outdoor temperature can be displayed on the keypad, spoken over the telephone, or displayed on an HAI Communicating Thermostat.

1. Each Temperature Sensor requires one zone input. Each Humidity Sensor requires one zone input.

   - Program the zone type as an Outdoor Temperature (Type 81), Temperature (Type 82), Temperature Alarm (Type 83), for temperatures between 0° F - 120° F

   - Humidity (Type 84), for humidity between 0% – 100%

   - Extended Range Outdoor Temperature (Type 85), Extended Range Temperature (Type 86), and Extended Range Temperature Alarm (Type 87), for temperatures between -40° F - 120° F

2. When mounting outdoors, plan to mount under an overhang or to the underside of an eave, otherwise known as the soffet, to protect it from direct sunlight and rain. Run a 4-conductor wire from the Lumina Pro controller to the selected location.

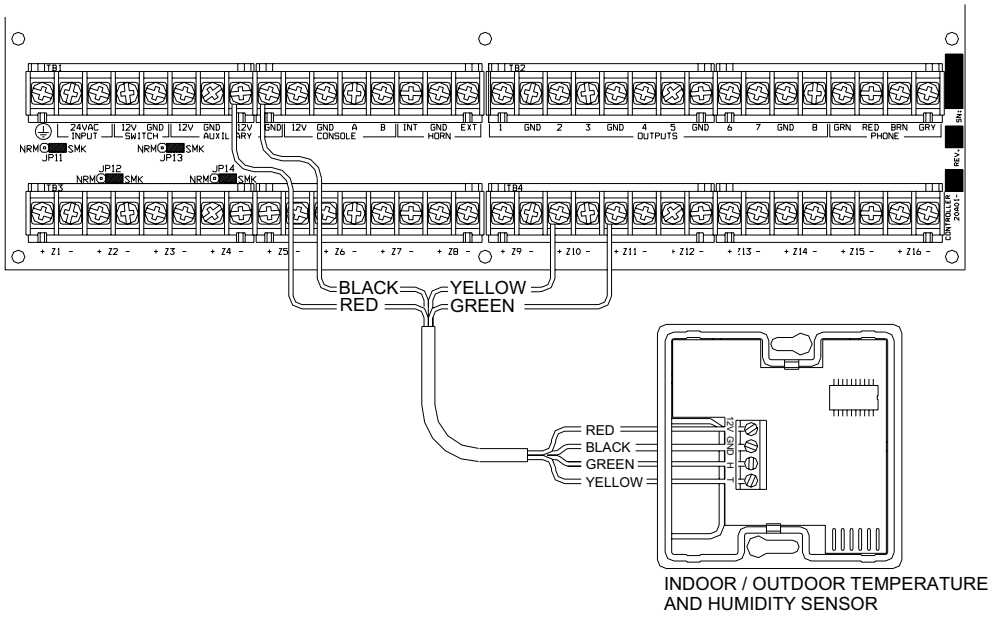

HAI Thermostats

Lumina Pro supports up to 64 HAI RC-Series Communicating Thermostats. The controller can send commands to the thermostat to change mode, cool setting, heat setting, status of fan and hold, and other items.

Run a 3 (or 4) conductor wire from Lumina Pro to the thermostat location. All thermostats are connected in parallel to Zone 16 and Output 8. Connect the red COMM cable wire with the black COMM cable wire. Make the connections (*as shown below)* using the supplied wire splices.

HAI Thermostats are preprogrammed with energy saving settings recommended under the EPA Energy Star program. When used with a Lumina systems, HAI recommends that the thermostat be configured as "non-programmable" - (See Setup Item 03 - "Display Options") in the thermostat's installation manual.

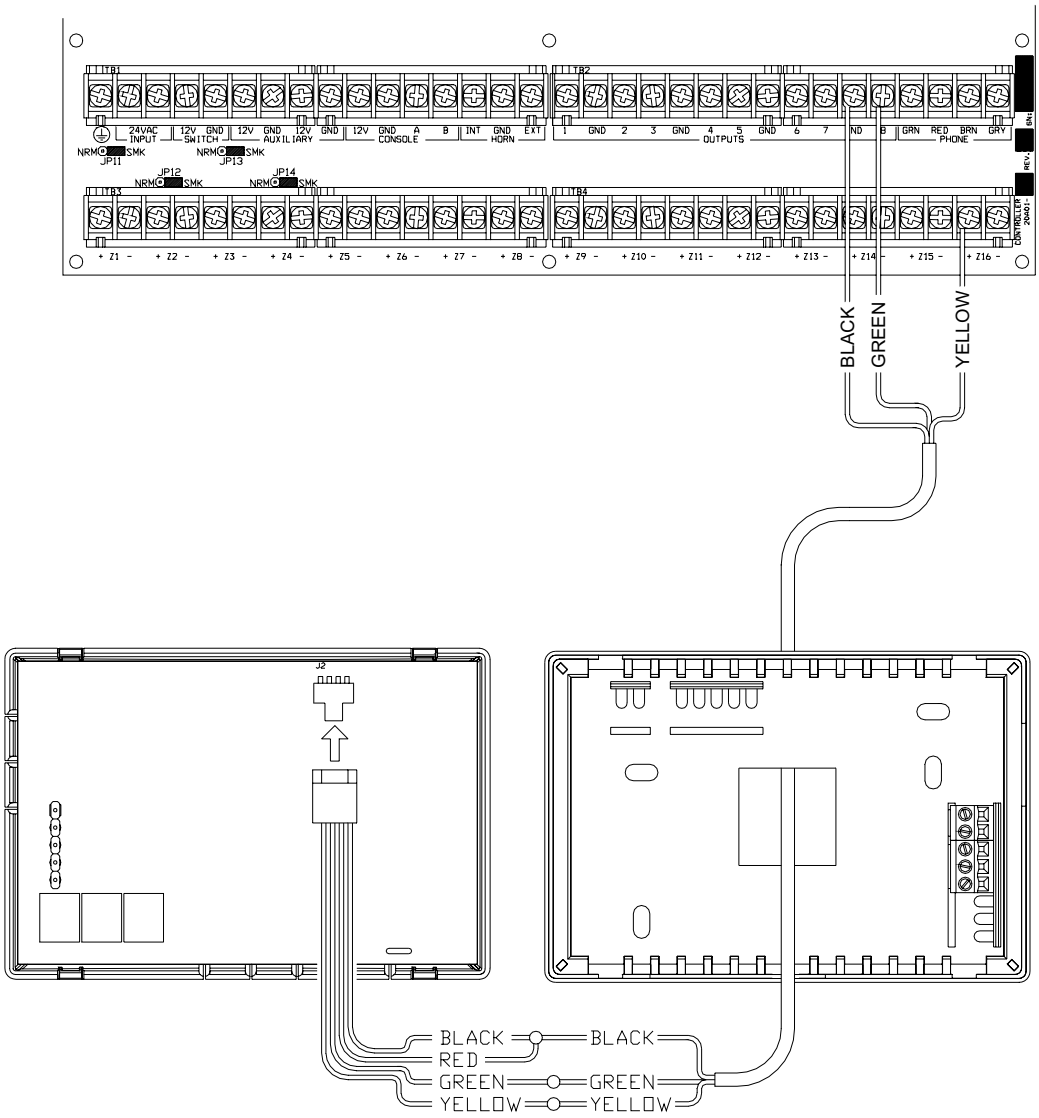

To access a serial port, use the HAI Model 21A05-2 Serial Cable Kit. Plug one end of the cable into one of the modular serial port connectors on the controller. Plug the other end into the Model 21A05-1 Communication Cable Adaptor (modular to DB-9 RS-232), which connects the Lumina Pro serial port to the computer's DB-9 RS-232 port.

To make your own serial cable, follow the diagrams below. When making connections, be sure to correctly orient the cable as shown (with the tab on the modular cable facing up, make sure that the Yellow wire is at the top).

Connect the Yellow, Green, Red, and Black wires to the DB-9 connector as shown. Also, connect Pins 1, 4, and 6 together and Pins 7 and 8 together.

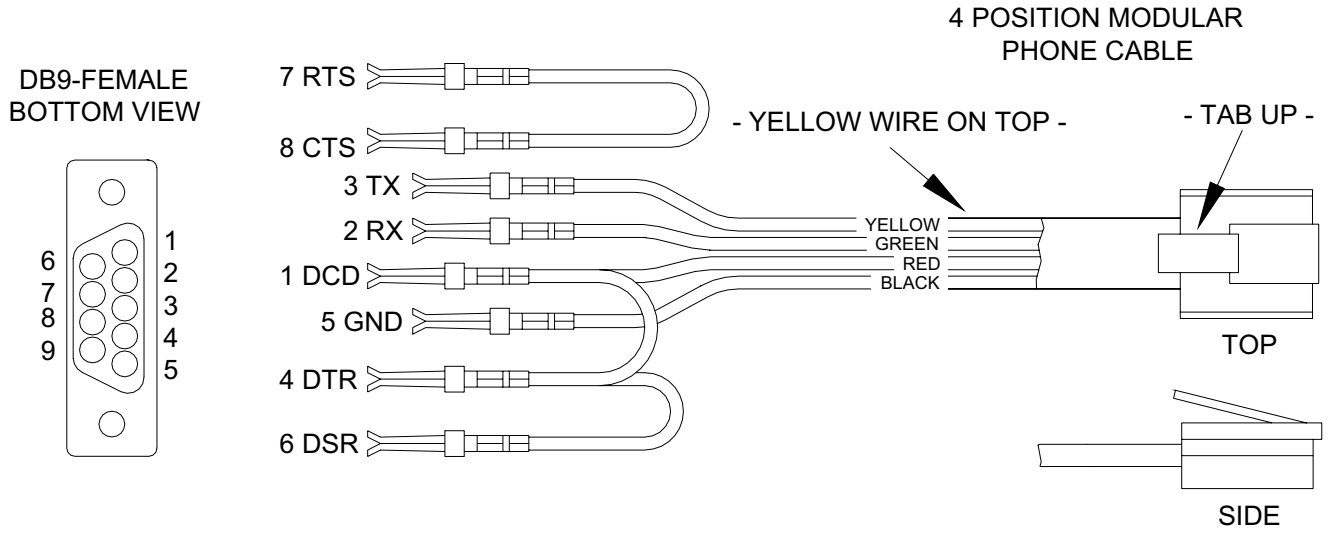

RS-232 CONNECTIONS

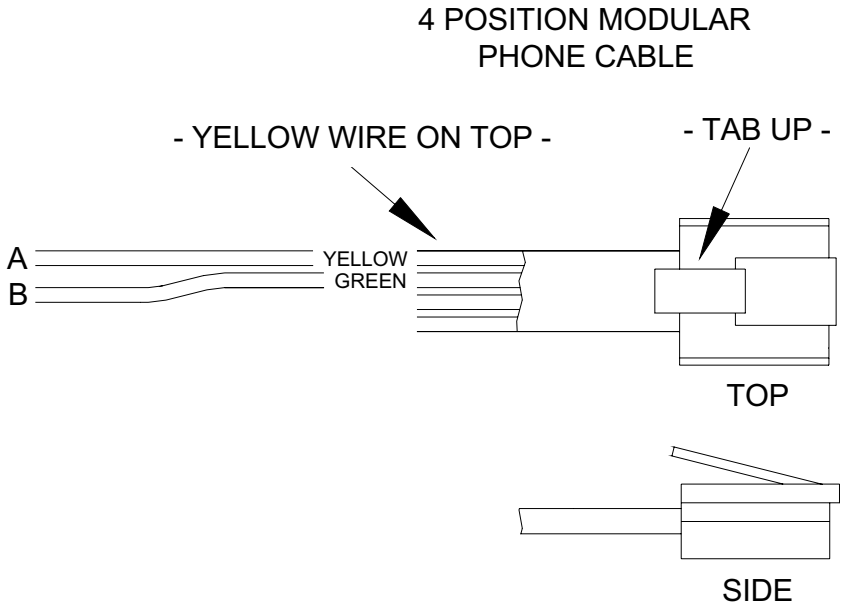

RS-485 CONNECTIONS

LUMINA PRO SPECIFICATIONS

```
Size:  Controller:  13 W x 13 H x 4.5 D
       Keypad:      4.6 W x 4.5 H x 1.2 D

Weight:  Controller:  approx. 10 lb.
         Keypad:      approx. 0.5 lb.

Operating     32 - 122 degrees F (0 - 50 degrees C)
Ranges:       10 - 95 % relative humidity, non-condensing

Power:        120 VAC, 60 Hz, 60 watts

Transformer:  24 VAC, 1.67 amps, 40 VA

Battery:      Rechargeable Lead-Acid, 12 volts, 5 amp-hour

Device Fuse:  Polyfuse:  1.35 A

Horns Fuse:   Polyfuse:  1.35 A

Battery Fuse: Polyfuse:  4.00 A

Polyfuses are permanent fuses that do not need replacement.

Nominal Voltage:       10 - 13.7 VDC, 0.5 V max. peak to peak ripple

Low Voltage Cut Out:   approx. 9 VDC

Typical Current Consumption at Nominal Voltage:

            Controller:  135 mA
            Keypad:      backlight off - 35 mA; backlight on - 100 mA

Controller Maximum Group Current Outputs:

Devices:   AUX 12 VDC, SWITCH 12 VDC, CONSOLE, and OUTPUTS 1 - 8: 1 A

Outputs:   INT HORN and EXT HORN: 1 A

Controller Maximum Individual Current Outputs:

Devices:   (Do not exceed 1 A total)

       AUX 12 VDC                        1 A
       SWITCH 12 VDC                     1 A
       CONSOLE                           1 A
       OUTPUTS 1 - 8                     100 mA
```

UNDERWRITER'S LABORATORIES (UL) LISTING

The 44A00-2 Lumina Pro controllers and keypads have been tested and Listed by UL for the following applications:

- Enclosed Energy Management Equipment

FEDERAL COMMUNICATION COMMISSION NOTICE:

1. This equipment complies with Part 68 of FCC Rules. On the door, inside of the Lumina Pro enclosure, is a label that contains, among other information, the FCC registration number and Ringer Equivalence Number (REN) for this equipment. If requested, provide this information to your telephone company.

2. An FCC compliant telephone cord and modular plug is provided with this equipment. This equipment is designed to be connected to the telephone network or premises wiring using a compliant modular jack which is Part 68 compliant. See installation instructions for details.

3. The REN is useful to determine the quantity of devices you may connect to your telephone line and still have those devices ring when your number is called. In most, but not all areas, the sum of RENs of all devices should not exceed five (5). To be certain of the number of devices you may connect to your line, as determined by the REN, you should call your telephone company to determine the maximum REN for your calling area.

4. If your Lumina Pro system causes harm to the telephone network, the telephone company may disconnect you service temporarily. If possible, they will notify you in advance. You will be advised of your right to file a complaint with the FCC.

5. Your telephone company may make changes in it's technical operations, facilities, equipment, or procedures; if such changes affect the compatibility or use of this device, the telephone company is required to give adequate notice of changes so as to give you an opportunity to maintain uninterrupted service.

6. In the event of equipment malfunction, all repairs should be made by our company or an authorized agent. It is the responsibility of users requiring service to report the need for service to our Company or to one of our authorized agents.

Service can be obtained at:

HAI
21487 Bayou Ct.
Abita Springs, LA. 70420-3151

7. This equipment may not be used on coin service provided by the telephone company. Connection to party lines is subject to state tariffs. (Contact your state public utility commission or CORPORATION commission for information.)

8. This equipment generates and uses radio frequency energy and if not installed and used properly, that is, in strict accordance with the manufacturer's instructions, may cause interference to radio and television reception. This device complies with Part 15 of the FCC Rules. Operation is subject to the following two conditions:

    1. This device may not cause harmful interference, and

    2. This device must accept any interference, including interference that may cause undesired operation.

Part 15 of FCC Rules are designed to provide reasonable protection against such interference in a residential installation. However, there is no guarantee that interference will not occur in a particular installation. If this equipment does cause interference to radio or television reception, the user is encouraged to try to correct the interference by one or more of the following measures:

    1. Reorient the receiving antenna.

    2. Plug the receiver into a different outlet. If necessary, the user should consult the installer or an experienced radio/television technician for additional suggestions.

CANADIAN INDUSTRY CANADA NOTICE

Notice: The Industry Canada label identifies certified equipment. This certification means that the equipment meets certain telecommunications network protective, operational and safety requirements. The Industry Canada does not guarantee the equipment will operate to the user's satisfaction.

Before installing this equipment, users should ensure that it is permissible to be connected to the facilities of the local telecommunications company. The equipment must also be installed using an acceptable method of connection. In some cases, the company's inside wiring associated with a single line individual service may be extended by means of a certified connector assembly (telephone extension cord). The customer should be aware that compliance with the above conditions may not prevent degradation of service in some situations.

Repairs to certified equipment should be made by an authorized Canadian maintenance facility designated by the supplier. **Any repairs or alterations made by the user to this equipment, or equipment malfunctions, may give the telecommunications company cause to request the user to disconnect the equipment.**

Users should ensure for their own protection that the electrical ground connections of the power utility, telephone lines and internal metallic water pipe system, if present, are connected together. This precaution may be particularly important in rural areas.

Caution: Users should not attempt to make such connections themselves, but should contact the appropriate electric inspection authority, or electrician, as appropriate.

Notice: The **Ringer Equivalence Number** (REN) assigned to each terminal device provides an indication of the maximum number of terminals allowed to be connected to a telephone interface. The termination on an interface may consist of any combination of devices subject only to the requirement that the sum of the Ringer Equivalence Numbers of all the devices does not exceed 5.

This digital apparatus does not exceed the Class B limits for radio noise emissions from digital apparatus set out in the Radio Interference Regulations of the Canadian Department of Communications.

Le present appareil numerique n'emet pas de bruits radioelectriques depassant les limites applicables aux appareils numeriques de la class B prescrites dans le Reglement sur le brouillage radioelectrique edicte par le ministere des Communications du Canada.

IF YOU HAVE TROUBLE WITH YOUR PHONES

...and you suspect that your Lumina Pro is causing the trouble, disconnect the Controller from the phone lines by removing the PHONE LINE cable from BOTH THE PROCESSOR BOARD AND THE RJ31X JACK INSIDE THE CONTROLLER ENCLOSURE.

HLC Overview

HAI Lighting Control (HLC) combines HAI UPB™ Wall Switches, Dimmers, and Modules, HAI UPB™ Room Controllers, HAI UPB™ House Controllers, and HAI UPB™ Lumina Mode Controllers to create lighting scenes that set the proper mood and ambiance for various activities throughout a home.

HLC format is a defined structure for configuring, programming, and operating all the HLC lighting devices in a home.

Room Controllers control up to 7 lighting loads in a room. House Controllers control up to 8 Rooms of HLC lighting. Lumina Room Controllers set the Lumina mode.

HAI manufactured UPB™ devices (collectively referred to as HLC devices) are configured using the Lumina keypad.

About Rooms

Each "room" of HLC lighting consists of 8 consecutive unit numbers, starting at Unit 1 (i.e. Room 1 = Units 1-8, Room 2 = Units 9-16, Room 3 = Units 17-24, etc.). Each room can consist of a maximum of 8 HLC devices, configured as follows:

- Up to 7 HAI UPB™ Wall Switches, Dimmers, and/or Modules (for controlling up to 7 lighting loads in a room or area)
- 1 or more Room Controllers (set a scene in a room, turn the room on and off, and dim and brighten the room)
- 1 Lumina Mode Controller (for setting the current Lumina mode)
- 1 House Controller (for controlling up to 8 rooms of HLC lighting)
- 1 or more House Controllers (used as a general purpose 8 button keypad controllers)

The first unit number in each room (i.e. 1, 9, 17, 25, etc.) is reserved for controlling the room; this is where the Room Controller will reside. The name for this unit should reflect the room name (e.g. Living Room, Kitchen, Great Room, Theater, etc.).

HLC Wall Switches, Dimmers, or Modules cannot be programmed to these unit numbers. If one or more Room Controllers are used, the first Room Controller should be set to the first unit number in the group (i.e. Unit 1 – Room 1); additional Room Controllers can be used by setting each to any other unused unit number in the group between the 2nd and 7th unit number (i.e. Unit 2-7 – Room 1).

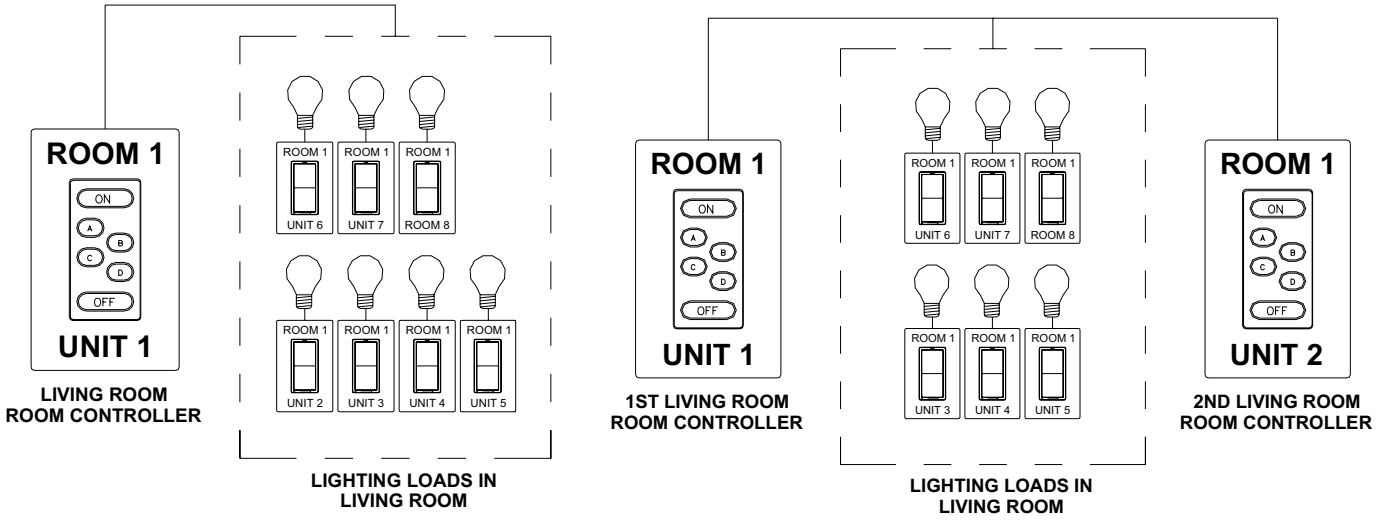

About Room Controllers

The HAI UPB™ 6-Button Room Controller allows for lighting control of a room where HAI UPB™ Wall Switches, Dimmers, and Modules have been installed. From a Room Controller the room can be turned off (all loads in the group are turned off), turned on (all loads in the group are turned on), brightened (all loads are brightened from their current level), dimmed (all loads are dimmed from their current level), or set to one of 4 lighting scenes (A-D).

Room Controller LED Indicators

When the room is turned on, the LED indicator behind the "On" button is illuminated and all others are turned off. When the room is turned off, the LED indicator behind the "Off" button is illuminated and all others are turned off. When the room is brightened, the LED indicator behind the "On" is illuminated and all others are turned off. When the room is dimmed, the LED indicator that is currently illuminated stays on. When the room is set to a lighting scene (A-D), the LED indicator behind the respective scene letter is illuminated and all others are turned off.

The Lumina controller keeps track of the exact status of each unit even when a lighting scene is initiated by the Room Controller. Room Controllers also keep track of when individual switches in a room are turned on and off. When all of the lighting loads in a room are turned off, the "Off" indicator is illuminated. If any of the lighting loads in a room are turned on at an HAI UPB™ Wall Switch or Dimmer, the "On" indicator will illuminate and the "Off" indicator is turned off. Likewise, if the "On" indicator or one of the scene indicators is illuminated, and then all of the lighting loads are turned off at HAI UPB™ Wall Switches, the "Off" indicator will illuminate and any others are turned off.

About House Controllers

Each HAI UPB™ 8-Button House Controller allows for controlling all 8 rooms of lighting where HAI UPB™ Wall Switches, Dimmers, and Modules have been installed.

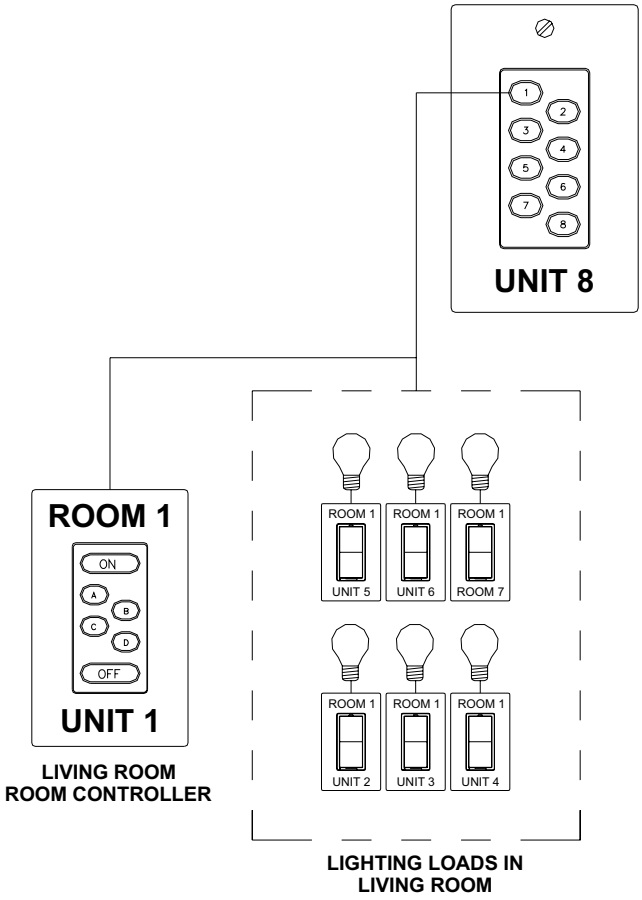

APPENDIX A – UNDERSTANDING HLC

Each button on the House Controller is used to toggle all of the lights in the respective room on and off. When the room is turned on, the LED indicator behind the respective button is illuminated and all of the lights in the room are turned on. When the room is turned off, the LED indicator behind the respective button is turned off and all of the lights in the room are turned off. If a lighting load in the respective room is turned on, the LED indicator behind the button is illuminated. When all lighting loads in the respective room are turned off, the LED indicator behind the button is turned off.

Each House Controller controls 8 consecutive rooms (i.e. Room 1-8, Room 9-16, Room 17-24, and Room 25-31). To configure a House Controller to control a group of 8 rooms, it must be set to the last unit number in one of the respective rooms. For example, a House Controller set to Unit 8, 16, 24, 32, 40, 48, 56, or 64 can be used to control Rooms 1-8. This allows you to have up to 8 House Controllers throughout the house that control Rooms 1-8.

When used with Lumina Pro, House Controllers for Rooms 9-16, 17-24, and 25-31 are configured in a similar manner. For example:

- Unit 72, 80, 88, 96, 104, 112, 120, and 128 can be used to control Rooms 9-16.
- Unit 136, 144, 152, 160, 168, 176, 784, and 192 can be used to control Rooms 17-24.
- Unit 200, 208, 216, 224, 232, 240, and 248 can be used to control Rooms 25-31.

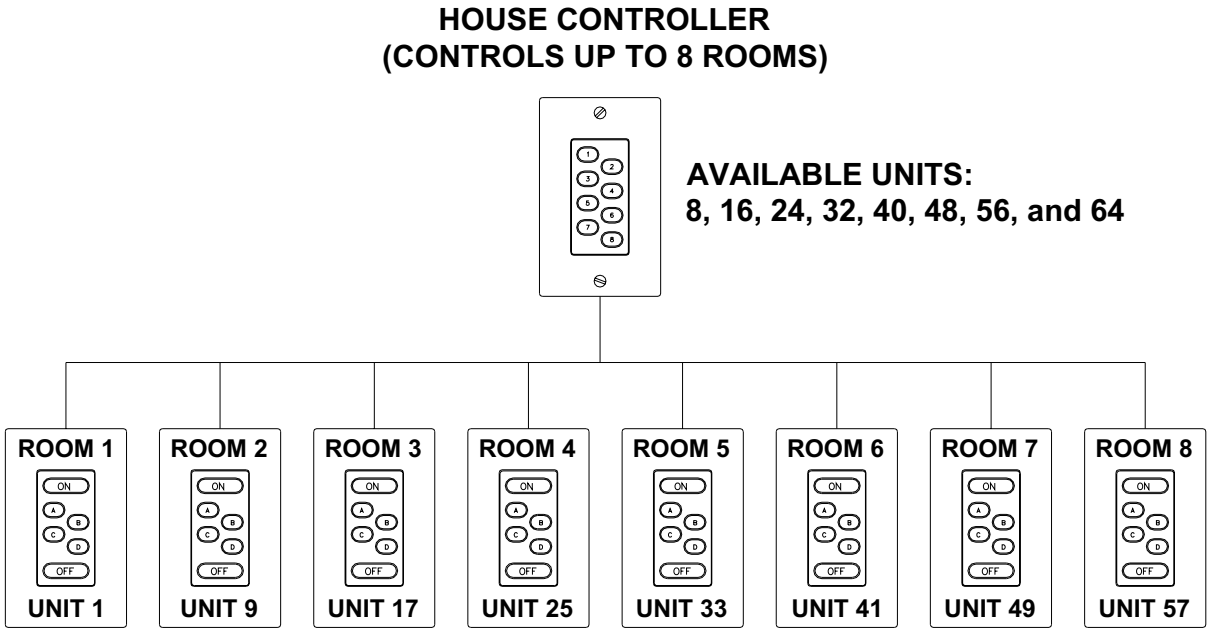

About Lumina Mode Controllers

The HAI UPB™ Lumina Mode Controller is use to set the current mode in a Lumina System. To configure a Lumina Mode Controller, it must be set to the last unit number (8th unit) in a room and must not be named. For example, Unit 8, 16, 24, 32, 40, 48, 56, 64, 72, 80, 88, 96, 104, 112, 120, 128, 136, 144, 152, 160, 168, 176, 784, 192, 200, 208, 216, 224, 232, 240, and 248 may be used for Lumina Mode Controller. This allows you to have up to 32 Lumina Mode Controllers throughout the house.

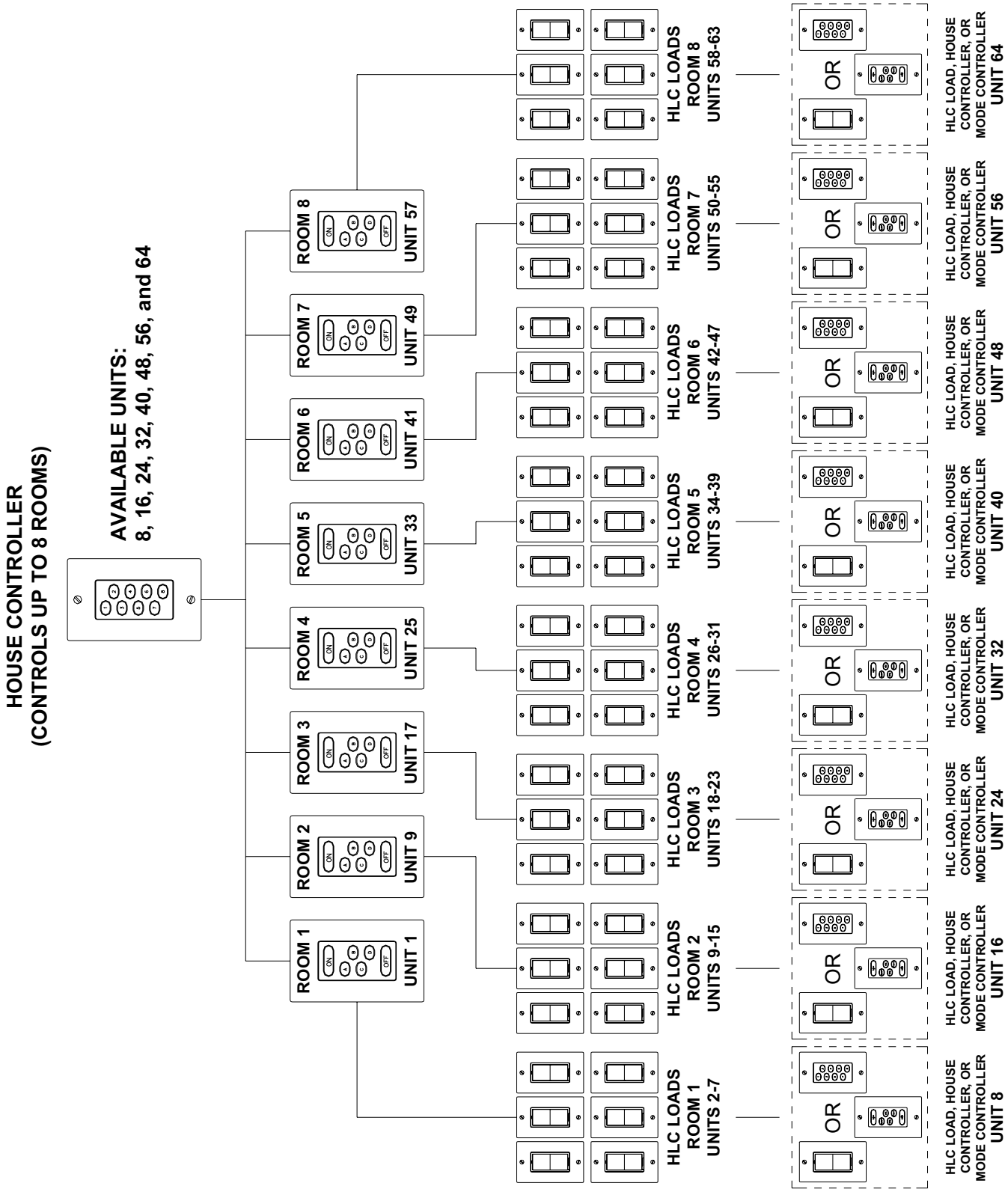
HOUSE CONTROLLER
(CONTROLS UP TO 8 ROOMS)
AVAILABLE UNITS:
8, 16, 24, 32, 40, 48, 56, and 64
ROOM 1
UNIT 1
ROOM 2
UNIT 9
ROOM 3
UNIT 17
ROOM 4
UNIT 25
ROOM 5
UNIT 33
ROOM 6
UNIT 41
ROOM 7
UNIT 49
ROOM 8
UNIT 57
HLC LOADS ROOM 1 UNITS 2-7
HLC LOADS ROOM 2 UNITS 9-15
HLC LOADS ROOM 3 UNITS 18-23
HLC LOADS ROOM 4 UNITS 26-31
HLC LOADS ROOM 5 UNITS 34-39
HLC LOADS ROOM 6 UNITS 42-47
HLC LOADS ROOM 7 UNITS 50-55
HLC LOADS ROOM 8 UNITS 58-63
OR
HLC LOAD, HOUSE CONTROLLER, OR MODE CONTROLLER UNIT 8
HLC LOAD, HOUSE CONTROLLER, OR MODE CONTROLLER UNIT 16
HLC LOAD, HOUSE CONTROLLER, OR MODE CONTROLLER UNIT 24
HLC LOAD, HOUSE CONTROLLER, OR MODE CONTROLLER UNIT 32
HLC LOAD, HOUSE CONTROLLER, OR MODE CONTROLLER UNIT 40
HLC LOAD, HOUSE CONTROLLER, OR MODE CONTROLLER UNIT 48
HLC LOAD, HOUSE CONTROLLER, OR MODE CONTROLLER UNIT 56
HLC LOAD, HOUSE CONTROLLER, OR MODE CONTROLLER UNIT 64

211

ASU
Windows V

R2H

R2H Ultra-Mobile PC For The New Mobile Computing Era

7-inch LCD touch screen with handwritten input support and solid security protection – The R2H offers full PC functions and more!

Enlargement Print

Specifications

Processor & Cache Memory	Intel ULV Celeron® M Processor 900MHz
Operating System	Genuine Microsoft® Windows® XP Tablet PC Edition
Chipset	Intel® 910GML
Main Memory	DDR2 768MB
Display	7" active matrix TFT(800x480) ASUS Splendid Video Intelligence Technology
Video Graphics & Memory	Intel® GMA 900
Hard Drive	60GB, 4200RPM, 1.8" Slim HDD
Optical Drive	N/A
Card Reader	SD card slot push / pull type
Fax/Modem/LAN/WLAN	On board 10/100 LAN (optional) Integrated 802.11b/g Built-in Bluetooth™ V2.0+EDR (optional)
LED Status Indicator	Power on/Suspend LED off (Battery Full) /LED on (Charging)/Low(LED sparkle) H DD WLAN enabling Bluetooth
Interface	1 x R2H Port Bar connector for external hub(S/PDIF, VGA, DC-in, 3 USB, LAN) / VGA function support via VGA Cable (optional accessory) 2x USB 2.0A ports 1 x mini-USB2.0A port 1 x Microphone 1 x Headphone 1 x AV (Audio + Video) out 1 x RJ45 (Lan port)
Shortcuts	Thumb Sticker Page Up & Down Button Functional Setting Button 4 Way Directional Button

	WLAN/ Bluetooth Switch button Log-in(SAS) Key
Audio	Built-in 1 mono speaker and 1 microphone
KeyBoard	External foldable USB KBD
Battery Pack & Life	Primary: Polymer battery 3430mAh, 24W/hr, 2 hours rundown life Back-up: Polymer battery 6860mAh, 48W/hr (optional)
AC Adapter	Output : 12V DC, 3A, 36W Input : 100~240V AC, 50/60Hz universal 3/ 2 pin compact power supply system 12V Car Charger Cable (optional)
Dimension & Weight	1.83lbs 28mm
Security	FingerPrint Reader ASUS Security Protect Manager
Supplied Accessories	Protection Bag USB 2.0 Cable USB Mouse (optional) External Foldable USB Keyboard (optional) External DVD Dual (optional) Back-up Battery (optional) 12V Car Charger Cable (optional)
Multimedia Software	**GPS Navigation Software(optional)** "Streets and trips" for North America region (Map data by NavteQ) "Auto route" for Europe region "ASUS Map" for Taiwan, Hong Kong and Singapore region "Lingtu" for China region ASUS Mobile Theater 4.0 (multimedia gateway to TV, music, photo, navigation, I-Phone, and game)
Virus & Tool Software	Microsoft® Touch Pack Symantec® Norton® AntiVirus® 2006 Adobe Acrobat Reader 7.0 NERO Express V6.0
ASUS Utility	ASUS Infopen ASUS WinFlash ASUS Live Update ASUS Power4Gear+
Warranty & e-support	2-year Global & 30days Zero Bright Dot 1-year battery pack warranty On line problem resolution through web interface (BIOS, Driver update) OS (Microsoft® Windows® XP) install/uninstall consultation Bundled software install/uninstall consultation ASUS Utility support

* All specifications are subject to change without notice. Please check with your supplier for exact offers. Products may not be available in all markets.
* PCB color and bundled software versions are subject to change without notice.
* Brand and product names mentioned are trademarks of their respective companies.

MS-Word 2000 Format for inclusion in bidding specification document for new construction or remodeling.

EDIT: All notes shown in red shall be edited in or out. Add or delete device options as required of individual project. Delete red "Edit Notes" in final copy. This specification is a "performance specification outline" and requires final editing by a bidding contractor to ensure completeness. This guide specification may be edited into a "Performance Guide for Design-Build"; or it can be edited to provide specific items and quantities to be bid by the Installing or General Contractor.

SECTION 13800

SECURITY AND HOME (edit/ or) BUILDING AUTOMATION SYSTEM

FOR COMMERCIAL AND RESIDENTIAL BUILDING PROTECTION, LIGHTING CONTROL AND ENERGY MANAGEMENT

PART 1 - GENERAL

1.01 SCOPE. This Section includes the furnishing and installing of an electrically operated, closed circuit, fully addressable, Security and Building/ Home Automation System.

1.02 RELATED WORK. The General Conditions, Supplementary Conditions, and Division 1 Specifications apply to all work of this section. **(Edit /Delete this paragraph if this System is not part of a larger construction project with a General Contractor).**

1.03 SUBMITTALS

A. Shop Drawings shall be submitted. Complete system Shop Drawings shall be prepared for this particular project which include device layout drawn on the building floor plan, point-to-point wiring diagram(s), and conductor sizes and types. Submit 5 copies to the Architect / Engineer/ Owner for review and approval. Layout shall be provided on an actual building floor plan provided by the Architect or Engineer as well as diagramed for system clarity. Drawings shall show all equipment locations and quantities required. A final "as-built" plan layout shall be provided to the Owner upon Substantial Completion of the actual installation. Any recessed equipment shall be coordinated with the General Contractor.

B. Manufacturer's Literature of all proposed system components shall be submitted for review and approval. Submit 5 copies of each with all items clearly circled and options highlighted that will be installed.

1.04 AUTHORIZED PRIMARY SYSTEM MANUFACTURER. Main equipment shall be manufactured by **Home Automation, Inc. (HAI)**. Tel. (800) 229-7256, www.homeauto.com.

1.05 AUTHORIZED INSTALLER. Contractor/ installer shall be manufacturer trained. (For a listing of installation contractors in your area, see www.homeauto.com or contact **HAI.**

1.06 APPROVALS. Integrated controllers shall be approved by the following:

A. UL Residential Fire and Burglary

B. UL Commercial Burglary

C. FCC (USA)

D. ICCS-03 (Canada)

E. California State Fire Marshall

F. EN50081-1, EN50082-1, EN50130-4, EN55022 Electromagnetic Compatibility, Emissions and Immunity (CE)

1.07 INTEGRATED BUILDING/ HOME AUTOMATION SYSTEM DESCRIPTION AND OPTIONS. The main Omni Controller is capable of providing: Enhanced Security, Fire Protection/ Smoke Alarm, Energy Management (HVAC Control), Lighting Control, Appliance Control, along with built in telephone access and optional Internet access. On premise control is possible by LCD Console, Color Touch-screen, telephone, and computer network. (Edit the above and below options as desired/required.)

A. ENHANCED SECURITY SYSTEM DESCRIPTION. System shall include installation of door contact sensors, glass breakage sensors, motion detectors, and other devices as shown on the drawings and specified herein. Devices for burglar-intrusion alarm shall be as noted on the drawings and specified herein. (Option Edit:) Devices for building access is also noted on the drawings and specified herein.

B. FIRE PROTECTION / SMOKE ALARM SYSTEM DESCRIPTION. As an extension of the base security system, the installation shall include smoke, heat and gas sensors as required by code, and installed in accordance with manufacturer's instructions. (Edit Note: If this system is for a commercial building further connections to fire doors, smoke detectors, magnetic door hold opens, and alarms may be required by Code.)

C. ENVIRONMENTAL MONITORING SYSTEM DESCRIPTION The system shall include temperature sensors for notification of a non-functioning furnace or over- or under-heating of critical areas; humidity sensors for notification of over- or under-humidification of critical areas; water sensors for notification of flooding or water leaks from water heater, broken pipes, etc.; water temperature sensors for notification of under or over temperature of pools, spa, aquatic details.

D. ENERGY MANAGEMENT (HVAC CONTROL). Furnaces and air conditioning systems may be controlled by the system using remotely controlled thermostats and/or Programmable Energy Saver Modules (PESMs) to allow for both time and occupancy mode control of temperatures, nighttime setback and vacation setback.

E. LIGHTING AND APPLIANCE CONTROL. Lighting circuits may be controlled via two-way Powerline Carrier, Direct Wired ALC Lighting Control switches, or via low voltage contact closure to lighting contactors to allow lighting control for convenience, energy management and safety. Lights may be programmed for timed operation, including sunrise and sunset times which the system shall calculate internally; safety operation, such as illuminating pathways in the event of alarm; occupancy sensing for energy conservation using one or more of the system motion detectors or door contacts; Scene control for selection of lighting scenes of varying brightness for architectural illumination and lighting effect; security lighting for occupant safety and crime deterrence.

1.08 MONITORING (Choose One:)

A. Monitoring shall be via an independent Central Monitoring Station (CMS) provided by the installing contractor (Note: Specify company and monthly rate charges to Owner).

B. Monitoring shall be self-monitoring with local alarms, or self-monitoring with phone dialers to chosen phone numbers, or a combination thereof.

C. LOCAL CONTROL AND OPERATION OF SYSTEM. The system shall be controlled by one or more LCD consoles, Touch-screens, telephones or computers.

1. Consoles /Keypad Access: The system shall have at least one Console, each having a menu driven style of operation and a 48 Character, backlighted display and backlighted keys. Each console shall be capable of lighting, security, scene, temperature, status, event, message and system set up. It shall be capable of displaying outdoor temperature, multiple indoor temperatures, indoor and outdoor humidity and other items if they are connected to the system. The consoles shall be located at points of entry and exit to the premises, or other locations as described on the drawings. Consoles shall have a dual color LED that indicates security arming status (armed-red or disarmed-green) at a glance

2. (Optional) Touch-Screens: The system shall have one or more touch-screens, each having a graphical color icon display for finger-touch control of lighting, security, scene, temperature, status, event, message and system set up. It shall be capable of displaying outdoor temperature, multiple indoor temperatures, indoor and outdoor humidity and other items if they are connected to the system. Touch-screens shall be color, have backlighting with automatic dimming and shut off, have a diagonal screen size of 3.9 inches and a resolution of 240 x 320 pixels. Touchscreens shall have a dual color LED that indicates security arming status (armed or disarmed) at a glance. (Edit note: touchscreens are optional

3. On-site Telephone Access: As a standard feature, on-premises telephones (connected to the same phone line as the Omni controller) may be used to access a voice menu of control options, including lighting, security, scene, temperature, status, event, and message. (Edit note: this feature can be disabled if not desired, as may be the case in commercial environments.)

4. On-site Computer Access: The system shall include a combination RS-232/RS-485 port and an Ethernet port (OmniPro II) for connection to a local computer for local programming and control of the system.

D. REMOTE ACCESS AND CONTROL The system shall include as a standard feature, remote access capability as follows:

1. Off-site Telephone Access: With a valid access code, the system shall include remote (Edit the following: control and status OR status only) of lighting, security, pre-programmed macros, and temperatures, as well as a system status report and an event log report using a built-in voice. The system shall also include optional two-way voice components for remote listen in and talk back to the premises upon an alarm occurrence.

2. Computer Access: With a valid access code, the system shall include a built-in modem to provide remote control of lighting, security, pre-programmed macros, and temperatures, as well as a system status report and an event log. Additionally, the complete set up and programming of the system can be accomplished by an authorized person off-premises to facilitate maintenance and fault diagnosis. The system shall include a code lock out feature to discourage unauthorized access.

3. (Optional) Internet Access: With a valid user name and access code, the system shall include Internet access for remote control of lighting, security, pre-programmed macros, and temperatures, as well as a system status report and an event log. Additionally, on-premises cameras can be viewed, and set to record video in response to system events (such as an alarm.) Internet Access software shall also allow pre-programmed events to generate e-mails to customer-specified recipients. Contactor shall supply HAI Web-Link II software for Internet Access to the Omni controller. Customer shall supply Windows based personal computer, full time Internet connection, e-mail service and battery back-up for personal computer, if desired. A failure of any of the Internet components, Internet or operating system software or the personal computer SHALL NOT cause ANY loss of function on the Omni security and control system other than

Internet related functions. (Edit note: Internet access is optional and may be added later.)

1.09 INTEGRATED SYSTEM EMERGENCY BACKUP POWER REQUIREMENTS

The Omni controllers have built-in battery back-up for security and fire systems. Installer shall calculate current consumption of the system and provide battery(s) of sufficient capacity to operate the security and fire system upon loss of normal 120vac power in a normal supervisory mode for a period of 4 to 24 hours. (Typical backup time required is 4 hours for systems without fire protection, 24 hours with fire protection). The batteries shall be rechargeable and suitable for continuous standby use, as specified by HAI in the Omni controller Installation manual. The Omni system automatically transfers to the standby batteries upon power failure. The Omni charger is capable of recharging the battery fully within 24 hours. Under normal charging service, the battery will charge at a high rate and automatically switch to a maintenance mode when battery is fully charged. The battery charger circuit is current limited to prevent damage in the event of a short circuit on the battery leads. The battery will be automatically tested by the system every hour, and report on the consoles or to optional Central Monitoring Station in the event of battery low. In the event of an extended power failure and full discharge of the battery, system programming and set up will not be lost. The Omni controller is equipped with a low voltage cut-out to prevent deep discharge of the battery.

1.10 WARRANTY. All HAI equipment is warranted for 2 years (3 years on OmniPro II controller). All installation shall be fully guaranteed by the Installer for a period of one year from Substantial Completion covering installation or equipment defects.

PART 2 - PRODUCTS

2.01 MANUFACTURER & INSTALLERS. Main system Controller and accessories shall be an **"Omni"** system as manufactured by **HAI** (Home Automation, Inc.) New Orleans, LA; Tel. (800) 229-7256. (Web Site: www.homeauto.com). For devices not manufactured by HAI, provide such devices compatible with the chosen HAI equipment. The work under this Section includes a fully integrated security and fire alarm system including building automation components as specified herein.

2.02 EQUIPMENT See drawings for quantities and locations of each of the following (Edit: or if "Design-Build"-- Installer shall submit a full Proposal including a building plan layout and complete list of equipment being proposed.) In addition to the capacities, all Omni controllers incorporate both a digital dialer/modem compatible with most central station equipment and a solid state voice dialer to call up to 8 programmable numbers and report type and location of alarm. A duplex 120VAC, 50/60 Hz. receptacle, preferably on its own circuit, is required for the Controller. Dimensions for Controllers and Model 17A00 Expansion Enclosure are for surface mounted enclosures supplied by HAI. Optional: Controllers and the 17A00 are also available on mounting plates for installation in popular Structured Wiring Enclosures from quality manufacturers such as Leviton OnQ, Siemon, Future Smart and UStec.

A. SYSTEM CONTROLLER shall be: (Choose one of the following systems)

1. **HAI OmniPro II** (suggested for 3000+ square feet) system shall have the following capacities:
   a. 64 Thermostats
   b. 16 Consoles and/or touch-screens
   c. 256 Lighting / Appliance Loads
   d. 16 Security Zones, expandable to 176
   e. 1500 Programming Lines
   f. 3 Year Warranty

OmniPro II Controller Dimensions: 13w x 13h x 4.5d inches, 330w x 330h x 114d mm.

2. **Omni II** (suggested for 1000 to 3000 square feet) system shall have the following capacities:
   a. 4 Thermostats
   b. 8 Consoles and/or touch-screens
   c. 64 Lighting / Appliance loads
   d. 16 Security Zones, expandable to 48
   e. 500 Programming Lines
   f. 2 Year Warranty

   Omni II Controller Dimensions: 13w x 13h x 4.5d inches, 330w x 330h x 114d mm.

3. **Omni LT** (suggested for up to 2000 square feet) system shall have the following capacities:
   a. 2 thermostats
   b. 4 Consoles and/or touch-screens
   c. 16 Lighting / Appliance loads
   d. 8 Security Zones, expandable to 24
   e. 100 Programming Lines
   f. 2 Year Warranty

   OmniLT Controller Dimensions: 9w x 12h x 3.5d inches, 229w x 305h x 89d mm.

B. ZONE EXPANSION MODULES. Provide the following expansion modules to increase the zone capacity of the above systems: (Edit Note: Choose as required for devices specified and future estimated needs.)

1. HAI Model 22A00-1 OmniLT Expansion Module. Adds 16 zones and 8 voltage outputs. Mounts inside OmniLT controller enclosure.

2. HAI Model 10A06 16-Zone Hardwire Expander. Mounts inside Omni II or OmniPro II controller enclosure. (For Omni II, OmniPro II controllers.)

3. HAI Model 17A00 Expansion Enclosure. Adds 16 voltage outputs for control and 16 inputs for additional security/fire zones, auxiliary or temperature inputs. Can be separately located from OmniPro II controller to simplify wiring. Also provides additional system power, with built-in power supply and battery charger, which is supervised by the OmniPro II controller. Use for additional security zones, sprinkler systems, pump control, motors. (For OmniPro II controllers). Dimensions: 13w x 13h x 4.5d inches, 330w x 330h x 114d mm.

C. CONSOLES. LCD readouts and Keypads. See drawings for locations and quantity. Consoles are powered from the Omni controller via the four-wire communications bus. (One or more console(s) must be present in system. CHOOSE of the following:)

1. HAI Model 11A00-2 Flush Mount Console with Silk Screen – this model is flush with the wall and provides a professional, built in look. Menu options are silk-screened on the face of the console. Dimensions: 5.6w x 5.5h x 1.2d inches, 142w x 140h x 30.5d mm.

2. HAI Model 11A00-9 Surface Mount Console with Silk Screen – this model mounts on the surface of the wall. Menu options are silk screened on the face of the console. Dimensions: 4.6w x 4.5h x 1.2d inches, 117w x 114 x 30.5d mm.

3. HAI Model 15A00-1 Universal Console, with trim ring for surface or flush wall mounting. This console has larger buttons and extra buttons for lights and scenes. Dimensions (without trim ring): 7w x 5.4h x 1.2d inches, 178w x 137h x 30.5d mm.

D. (Optional) TOUCH-SCREENS. Color, graphic, icon and menu driven system interface. See drawings for locations and quantity. Touch-screens are powered from the Omni controller via the four-wire communications bus.

1. OmniTouch Touch-Screen HAI Model 32A00-1. Color touch screen with 3.9 inch diagonal, backlighted LCD screen. Mounts in wall, approx. 0.3 inch, 7mm deep when installed. Supplied with one each: White faceplate, Beige faceplate, and Almond faceplates. Dimensions: 5.8w x 4.5h x 2.3d inches, 147w x 114h x 59d mm.

2. Replacement part numbers for OmniTouch faceplates: (CHOOSE IF DESIRED)
   32A01-1 White faceplate
   32A01-2 Beige faceplate
   32A01-3 Almond faceplate
   (Edit Note: Other colors may be available, check HAI web site)

E. (Optional) SIRENS/ ALARMS. See plans for location(s) (Edit note: If required). Provide one of the following: Suitable manufacturers of sirens include Revere, Ademco, Elk Products and other quality manufacturers.

1. Interior Siren(s): Recommended are low current piezo-electric sirens with minimum sound output of 85 dB.

2. Exterior Siren: Recommended are sirens in stainless steel enclosures for long term durability and weather resistance.

F. (Optional) COMMUNICATIONS. Provide: (Choose:)

1. Windows PC Access Software Model 1106W. Software allowing end-user to program system using PC. CD-Rom compatible with MS Windows 98/2000/XP.

2. Web-Link II Internet Access Software. Software allowing local and remote access to system via a local area network and the Internet. Also allows viewing and recording of video cameras and sound in response to system events (schedule, alarm, etc.) CD-Rom compatible with MS Windows 98/2000/XP Pro with MS Internet Explorer.

3. Serial Cable. HAI Model 21A05-2. Cable connects the built-in serial port of the controller to personal computers for Web-Link II and Windows PC Access

4. Two-Way Audio / Voice Alarm Module. HAI Model 10A11. Allows for 2-way communication, after an alarm.

   a. Speaker/ Microphone Module. HAI Model 28A00 (-1 /surface model; -2 /flush model). Speaker and microphone assembly for use with 10A11 module. Provide at locations per building plans.

G. (Optional) THERMOSTATS and TEMPERATURE CONTROL ACCESSORIES. Provide as shown on the plans or as listed below. Provide as required for HVAC equipment. Dimensions of all RC-Series thermostat models: 5.5w x 3.8h x 1.1d inches, 140w x 96 x 28d mm. (Edit Note: If desired.)

1. SINGLE STAGE HEAT/COOL THERMOSTAT. HAI Model RC-80. For control of single stage (1 heat / 1 cool) heating and cooling systems. Can also be used for heat-only or cool-only systems. Includes optically isolated communications connections to Omni system.

2. HEAT PUMP THERMOSTAT. HAI Model RC-100. For control of single stage heat pumps with auxiliary heating (2 heat / 1 cool). Includes Energy Efficient Control (EEC)

of auxiliary heating. Includes optically isolated communications connections to Omni system.

3. TWO-STAGE HEAT/COOL THERMOSTAT. HAI Model RC-122. For control of heating and cooling systems with one or two speeds or stages of operation, typically “low” and “High” (2 heat / 2 cool). Includes Energy Efficient Control (EEC) of second stage. Includes optically isolated communications connections to Omni system.

4. TWO-SPEED HEAT PUMP THERMOSTAT. HAI Model RC-112. For control of heat pumps with two speeds or stages of heating and cooling, and a third stage of auxiliary heating (3 heat / 2 cool). Includes Energy Efficient Control (EEC) of auxiliary heating. Includes optically isolated communications connections to Omni system.

5. SINGLE STAGE HEAT/COOL FOR ZONED SYSTEMS. HAI Model RC-90. Same as RC-80, with additional B & O terminals for setting the master mode of a single system with multiple zones controlled by dampers. Includes optically isolated communications connections to Omni system.

6. REMOTE INDOOR TEMP SENSOR / SURFACE. HAI Model 23A00-1 Surface mounted remote temperature sensor allows thermostat to be hidden and temperature to be sensed at proper location. Optional for RC- thermostats. Dimensions: 2w x 1.5h x 1d inches, 51w x 38h x 25d mm.

7. REMOTE INDOOR TEMP SENSOR / FLUSH. HAI Model 23A00-2 Flush mounted remote temperature sensor allows thermostat to be hidden and temperature to be sensed at proper location. For use in gypsum board and similar wall surfaces. Sensing disc can be painted and is nearly invisible. Optional for RC- thermostats. Dimensions: Sensing disc, 1.5 inches (38 mm) diameter.

8. PESM (Programmable Energy Saver Module) HAI Model 1101A. Allows override of existing furnace thermostat or sensing and controlling other temperatures such as attic fans, greenhouses, spa heaters, or can be used to cause the controller to dial out in the event of a furnace failure. Dimensions: 2.8w x 2.8h x 1d inches, 71w x 71h x 25d mm.

9. WATER TEMPERATURE SENSOR. HAI Model 14A00-8. Monitors temperature of pools, spas, greenhouses with a steel probe. Requires one zone on Omni controller.

10. INDOOR/OUTDOOR TEMPERATURE SENSOR. HAI Model 31A00-1. The Model 31A00-1 and Model 31A00-2 Indoor/Outdoor Temperature Sensor is used for sensing outdoor or indoor temperature. It is coated with a sealant to withstand outdoor moisture and features a new, high accuracy temperature sensor that doesn’t need calibration. The temperature can be used to activate programs for controlling temperatures in attics, garages, greenhouses, basements, wine cellars, and coolers. The temperature can be displayed on the console or spoken over the telephone. It can also report, log, alert, or generate an alarm if the temperature reaches freeze conditions or if the temperature goes above the high set-point or drops below the low set-point programmed in the Omni system. In an enclosure suitable for indoor décor. When used outdoors, it should be shielded from direct sun and rain. Dimensions: 2.8w x 2.8h x 1d inches, 71w x 71h x 25d mm. Requires one zone on Omni controller.

11. INDOOR/OUTDOOR TEMPERATURE AND HUMIDITY SENSOR. HAI Model 32A00-2. The Model 31A00-2 has the features of the 31A00-1 and also includes a Humidity Sensor that is used for reporting the outdoor or indoor relative humidity from 0 to 100 percent. High and low humidity limits can be set for taking action (i.e. turning on the bathroom vent fan or turning on humidifier in heating mode, etc.) or reporting high or low humidity conditions in homes, greenhouses, wine cellars, coolers, humidors, etc. Controlling humidity is helpful in combating the growth of mold in vulnerable areas of the home, such as bathrooms, basements, attics, etc. When used outdoors, it should

be shielded from direct sun and rain. Dimensions: 2.8w x 2.8h x 1d inches, 71w x 71h x 25d mm. Requires two zones on Omni controller.

H. HARDWIRED SECURITY AND SMOKE DETECTION DEVICES (Provide in quantities and at locations per drawings) Security and smoke detection devices shall be provided by the installing contractor. Models from quality manufacturers such as Sentrol, (a division of GE-Interlogix), Ademco, Napco, Tane Alarm Products (magnetic contacts), Amseco and others are compatible with the HAI controllers. Only one security device per controller zone shall be permitted to facilitate maintenance and troubleshooting. See Paragraph "H" for recommended detection device manufacturers.

1. Door / Window Magnetic Contact Switches shall be _____(installer to specify).

2. Motion Detectors shall be _____(installer to specify).

3. Glass Break Detectors shall be _____(installer to specify).

4. Smoke Detectors shall be _____(installer to specify).

5. Duct Smoke Detectors (if required by Code) shall be products of combustion type mounted in a housing, which will work in conjunction with, supplied air-sampling tubes. The housing shall be suitable for mounting directly on the duct, or remotely, and shall include a “power on” light, an alarm light, and a test-reset switch. The detector shall meet NFPA 90A requirements. Detectors shall be _____(installer to specify).

I. WIRELESS SECURITY AND SMOKE DETECTION DEVICES Wireless devices may be used in conjunction with or in place of hardwire devices. One Wireless Receiver is needed for up to 64 wireless devices. Provide the devices listed below at locations per drawings. Provide batteries as required. (EDIT--CHOOSE FROM THE FOLLOWING:)

a. OmniLT can have either the 22A00-1 OmniLT Expansion Module OR a Model 12A00-1 Supervised Wireless Receiver (not both). The Receiver will be configured to report 16 zones to the OmniLT. If desired, 4 wireless devices can report to one zone.

b. Omni II can have a 12A00-1 Supervised Wireless Receiver configured to report 16 zones AND one 10A06 Hardwire expander; in this configuration the Receiver will report 16 zones.

c. OmniPro II can have one or two 12A00-1 Supervised Wireless Receivers, each configured to report 16, 32, 48 or 64 zones in place of one Model 17A00 16 zone Expansion Enclosure for each 16 wireless zones.

1. Wireless Receiver: HAI Model 12A00-1 Supervised Wireless Receiver

2. Smoke Detectors shall be Linear model TSD-90 Wireless Smoke Detector

3. Glass Break Detectors shall be Linear model TGB-90 Wireless Glass Break Detector

4. Door/ Window Contacts shall be Linear model T-90 Wireless Door/Window Sensor

5. Motion Detectors shall be Linear model TMD-90 Wireless Motion Detector

J. Wiring & Cable. Provide wire as required or recommended by the Manufacturer for the components to be installed. Recommended wire sizes are:

1. Two-wire security devices (door and window contacts): 2 conductor 22 gauge stranded wire.

2. Four-wire security devices (motion and glass break detectors): 4 conductor 22 gauge stranded wire.

3. Thermostats: From the Omni controller to the thermostat; 4 conductor 22 gauge stranded wire; from the thermostat to the HVAC equipment, as supplied by the HVAC contractor, typically 18 to 20 gauge solid wire.

4. Remote Temperature Sensors for Thermostats (optional, if used): 22 gauge 2 conductor plus shield.

5. Consoles: 4 conductor 22 gauge stranded wire.

6. Touch Screens: 4 conductor 22 gauge stranded wire, however, an additional Cat 5 wire is suggested for future expansion.

7. ALC Lighting Switches (if used): 2 conductor 22 gauge stranded wire.

8. Telephone wiring, Telco demarcation block to Omni controller: 4 conductor 22 gauge stranded or Cat 5.

9. Ground to Omni controller: 16 gauge single conductor, stranded or solid.

10. Sirens: Indoor, low current: typical 2 conductor 22 gauge stranded.

11. Outdoor, high current with optional tamper switch: 4 conductor 18 gauge stranded.

K. Electrical Requirements: Suggested Instructions to Electrical Contractor:

1. Provide a duplex outlet, unswitched, and preferably on its own circuit, for the Omni controller.

2. Wire the electrical boxes so that the hot and neutral wires are at each switch location – this is required for all ALC and many Power Line Carrier (PLC) remote control switches, (Although some PLC models do not require neutral at the switch for incandescent loads, it is suggested that neutral be present at all switch locations for better signaling performance and a wider variety of switch and lamp options.)

3. Plenum Rated Wire: For commercial buildings where the above ceiling area is used as the air return space, provide “plenum rated” cable for all wiring above ceiling or provide approved conduit/ raceway for wiring.

PART 3 - EXECUTION

3.01 PREINSTALLATION MEETING. If requested by the Architect / Engineer /or General Contractor, provide one pre-installation meeting with the Owner’s representative, including the Architect or Engineer to review the system details and layout.

3.02 INSTALL SYSTEM in strict accordance with the Manufacturer’s recommendations and as required by building codes and fire codes under the local jurisdiction. If work is performed in an existing building, all work shall be performed to least disrupt the Owner and the building surfaces. All patching of required holes, etc. is by Others and shall be discussed with the Owner or

Architect or Engineer prior to work being done. Coordinate the work with other contractors that may be affected by work herein.

3.03 DETECTORS AND CONTROLS shall be mounted with sufficient clearance for observation and testing. All system junction boxes must be clearly marked for easy identification. Flexible conduit shall be used for all devices mounted in suspended lay-in ceiling panels. All conduit, mounting boxes, junction boxes, and panels shall be securely hung and fastened with appropriate fittings to insure positive grounding throughout the entire system. Locate all red alarm/ annunciation boxes in a clear location as approved by the Fire Marshall or other governing authority.

No wiring other than that directly associated with the fire alarm system, or its auxiliary functions, shall be permitted in fire alarm conduits. Wiring splices are to be avoided and, if needed, must be made only in junction boxes and shall be crimp-type. Transposing or changing color coding of wires is not permitted. Wire nut-type connections are not acceptable. All conductors shall be labeled on each end with “E-Z markers,” or equivalent. Conductors in cabinets shall be carefully formed and harnessed so that each drops off directly opposite its terminal. Cabinet terminals shall be numbered and coded. All controls, function switches, etc., shall be clearly labeled on all equipment panels.

Field-wiring shall be checked and tested to insure that there are no grounds, opens, or shorts. The minimum allowable resistance between any two conductors, or between conductors and ground, is 10 megohms after all conduit, conductors, detector bases, etc., have been installed, but before the detector devices are plugged into the bases or end-of-line devices installed.

Perform all electrical and mechanical tests required by the equipment manufacturer. A checkout report shall be prepared by the installer and submitted in triplicate, one copy of which will be registered with the equipment manufacturer. The report shall include, but not be limited to:

A. Indication that all equipment is properly installed, functions, and conforms with these specifications.

B. Tests of individual zones and control devices, as applicable.

C. Locations by zone and model number for each installed detector.

D. Installer’s name and date.

3.04 TESTS AND ADJUSTMENTS. After successful completion of all the tests and adjustments listed above, the Contractor shall submit the following information to the Architect (or, Edit) Engineer:

A. Complete “as-built" wiring diagrams.

B. Copy of the test report, as detailed above.

C. Service Contract Option. (Edit in/out, If requested by the Architect/Engineer/Owner.) Provide a yearly supervisory, testing and repair service agreement by the Installer for the Owner’s review. If acceptable a separate contract may be available directly with the Owner.

3.05 EQUIPMENT USE TRAINING OF OWNER. After Substantial Completion and prior to Final Acceptance by the Owner, provide one equipment training session (maximum of 1 hour) to the Owner.

END OF SECTION

32A00-1 OMNITOUCH™

This colorful "plug and play" touchscreen interface for Omni family controllers facilitates graphical control of security, HVAC, lighting, and other home control functions via easy-to-recognize icons. The touchscreen features a 3.9 inch color, touch sensitive LCD with backlighting that adjusts automatically to ambient lighting conditions and turns off when it's not in use. The two-color LED offers status at a glance, and there are selectable key click and beeper functions. The touchscreen unit mounts flush with the wall, and is supplied with a white, beige, and almond faceplate that is a slim 3/8 inch for an elegant built-in look. OmniTouch works with OmniLT, Omni II, and OmniPro II. It connects to 4-wire console bus on the controller.

33A00-1 OMNI CONSOLE
33A00-3 FLUSH MOUNT KIT

The 33A00-1 is a surface mount console with a new slim design that can be flush mounted with an optional flush mount backbox. It is compatible with OmniLT, Omni, Omni II, OmniPro, and OmniPro II controllers. The 33A00-1 console has larger buttons, a new "cool blue" backlight, and a thinner profile. Each features a 48 character backlit LCD display with menu operation, backlit keys, selectable keyclick, beeper functions and viewing angle. A two-color LED offers status at a glance: red for security armed, green when disarmed. All control, security and programming functions can be accomplished using a console. It has Silk Screen with the menu options printed on the console face. The 33A00-3 Flush Mount Kit provides a painted backbox that mounts in the wall; the console then mounts into the backbox providing a professional, built-in look.

17A00-1 AND 17A00-9 EXPANSION ENCLOSURE

The 17A00 Expansion Enclosure adds 16 inputs for additional security, fire, temperature, humidity, and automation inputs, a battery backed and supervised power supply for additional system power, and 16 voltage outputs for control. The 17A00 can be mounted up to 1000 feet away from the OmniPro II controller and has its own power supply and backup battery capability. It is commonly used for additional security / fire zones, and control of pumps, motors, commercial lighting, remote control breakers, and sprinkler systems. 17A00-1 is in an OmniPro II enclosure. 17A00-9 is on a 20A07-2 Universal Mounting plate for use in structured wiring enclosures. Optional 19A00-1 8-relay module mounts with either version.

10A11 TWO-WAY AUDIO/ VOICE ALARM MODULE

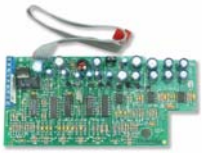

The 10A11 allows for two-way voice communications between the premises and the central station after an alarm event. Additionally, the 10A11 can announce alarms and programmed voice messages inside the premises using HAI's built in voice. The 10A11 connects to the Omni family controller board and 28A00 speaker/microphone modules. After an audible alarm, the module allows the central station to control the listen/talk mode. For silent alarms, the module allows listen in only. User can also access listen/talk features from any touch-tone phone, both local and remote. It can also be used as an internal paging/intercom system.

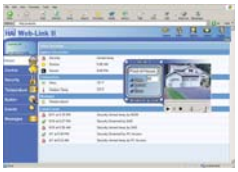

1108 HAI WEB-LINK II ®

HAI Web-Link II allows Internet access and control of all security, lights, appliance, heating and cooling, and other functions over the Internet. Web-Link II software generates Web pages from the controller's data that can be viewed locally and on any networked computer via Internet or Local Area Network. Web-Link II allows a homeowner to view family and property with video surveillance, record video on demand or based on event, and enjoy wireless access over a PDA or web-enabled phone. See HAI website and separate tech sheet.

10A07 4-RELAY / 19A00 8-RELAY

Relay Modules are used to convert HAI voltage outputs to Form C relay contacts for switching pumps, motors, commercial lighting, remote control breakers, and sprinkler systems. The 4-Relay Module provides 4 independent Form C Relays and the 8-Relay Module provides 8 independent Form C Relays. Contacts rated 5 amps at 24 VDC. LED indicators show which relays are energized. 10A07 is supplied with foam adhesive mounting tape; 19A00 has mounting holes.

10A06 16 ZONE HARDWIRE EXPANDER

This module adds 16 fully configurable input zones to Omni II and OmniPro II controllers. The module comes with mounting hardware and cable to attach to the HAI controller. Terminals are provided for 16 additional zones that can be programmed for burglary, fire, temperature, or auxiliary inputs. (Not for use with OmniLT)

22A00-1 OMNI LT EXPANSION MODULE

This module expands the OmniLT by adding 16 zones and 8 voltage outputs with overload protection. The module comes with mounting hardware and cable to attach to the OmniLT controller. The 16 zones can be programmed for burglary, temperature, or auxiliary inputs. The 8 output have individual overload protection, with overload indicator and reset button.

10A17-1 SERIAL INTERFACE

The 10A17-1 can be used to increase the number of serial ports on the Omni LT and Omni II from one to two, and on the OmniPro II from three to four. Like the built-in ports, the 10A17 allows Omni family controllers to be connected to personal computers and other serial devices for HAI Web-Link II, HAI PC Access, and Connectivity Partner systems using the HAI Omni-Link or HAI Pro-Link protocol. It supports both RS-232 and RS-485 connections.

28A00-1 AND 28A00-2 SPEAKER/ MICROPHONE MODULE

The 28A00-1 (surface mount) and the 28A00-2 (flush mount) module contains a speaker and microphone assembly that allows two-way communication with a central station after an alarm, paging and listening from an on-premises or remote phone, annunciation of alarm and zone by voice, and annunciate programmed voice messages (voice messaging not available on all systems) when connected to the 10A00 Two-Way Audio/Voice Alarm Module. It may also be used outdoors in weather protected areas such as overhangs, eaves, etc.

ADVANCED LIGHTING CONTROL (ALC) SWITCHES

ALC switches enhance lighting control by providing superior low cost reliability. They provide Architectural Quality lighting control with direct level control, scene controls, programmable fade rates, lighting based on motion or activity, schedules, and sunrise/sunset. ALC 1000 Watt dimmer switches and ALC 4-Button Scene Switch Modules, used for executing macros within the controller, are also available.

25A00-1 1-BRANCH ALC INTERFACE
25A00-2 4-BRANCH ALC INTERFACE

ALC Interface Modules can be used with an OmniLT, Omni II, or OmniPro II controller to control lights and appliances connected to ALC Switch Modules. Up to 16 unique ALC Switch Modules (one branch) can be controlled with OmniLT. Up to 62 unique ALC Switch Modules (two branches) can be controlled with Omni II. Up to 248 unique ALC Switch Modules (four branches on 2 separate ALC Interface Modules) can be controlled with OmniPro II.

1105W PC ACCESS FOR DEALERS
1106W PC ACCESS FOR END USERS

HAI PC Access Software allows complete set-up, programming, and monitoring of all HAI Omni family controllers. PC Access runs on Windows based computers and can be connected to the controller via RS-232, modem, or Ethernet (OmniPro II). It allows fast and convenient set up of all names, voice, automation programs, security codes, and all other configuration items. PC Access has Status pages to show the status of all system components, including door and window sensors, lights, appliances, thermostats, expanders, and more. A command section allows remote control using the computer, and the event log can be displayed. Automation programming is easy using HAI's Advanced Control Programming. PC Access now has new features to cut/copy/paste groups of programs between files, and a new search feature to find a particular group of programs in the program list. PC Access stores the complete set up of the controller on the computer's hard drive for backup purposes. 1105W is a must for professional installers, as it allows quick programming and file backup for customer support. 1106W is optional for the end user, offering a convenient way to program the automation system and most other features. It has all capabilities of 1105W except for certain system items that should be changed only by the installer.

21A05-2 SERIAL CABLE

This cable connects the OmniLT, Omni II, and OmniPro II built-in serial port to a personal computer for use with HAI Web-Link II, HAI Windows PC Access, and other equipment offered by HAI Connectivity Partners.

DUAL X-10 TRANSMITTER KIT

This kit is intended for use in larger homes to increase X-10 signal strength. By using this interface module in addition to the one with an HAI Controller, X-10 signal output is doubled and all electrical circuits receive a clear signal. This kit Includes one X-10 TW523 two-way powerline interface and the necessary parts to connect to HAI controller.

31A00-1 INDOOR/OUTDOOR TEMP SENSOR
31A00-2 INDOOR/OUTDOOR TEMP & HUMIDITY SENSOR

The 31A00-1 is housed in an attractive beige case suitable for indoor décor. The internal circuitry is coated to resist moisture and features a new digital sensor that doesn't need calibration. The sensor hooks up to any unused zone on an Omni Family controller. The temperature can be used to activate programs for controlling temperatures in attics, garages, greenhouses, basements, wine cellars, and coolers. The temperature can be displayed on the console or spoken over the telephone. It can also report, log, alert, or generate an alarm if the temperature reaches freeze conditions or if the temperature goes above the high setpoint or drops below the low setpoint programmed in the system. The 31A00-2 includes all of the features of the 31A00-1, and adds an electronic humidity sensor, reporting 0 to 100 percent relative humidity. High and low limits can be set for taking action (i.e. turning on bathroom vent fan, running a/c in de-humidification mode, etc.) or reporting high/low humidity conditions in homes, greenhouses, wine coolers, humidors, etc. This sensor uses two zones; one for temperature and one for humidity.

14A00-8 WATER TEMP SENSOR

This sensor's stainless steel probe is designed specifically to monitor water temperature in pipes or open water. It can be used to monitor temperatures for pools, spas, aquatic ponds, greenhouses, and solar collectors. It is supplied with stainless steel mounting screws and waterproof connectors.

1101A PESM

The PESM (Programmable Energy Saver Module) is used to override existing thermostats for setback control. It can also be used for sensing and controlling other fans, temperatures, such as attic fans, garage greenhouses, basements, wine coolers, humidors, etc. The PESM reports temperatures to the controller, and has a low voltage relay and LED indicator for control. The PESM doubles as a freeze sensor, which can cause the controller to dial out in the event of a furnace failure.

21A07-2 MOUNTING PLATE (OMNI LT)
20A07-2 UNIVERSAL MOUNTING PLATE (OMNI II / PRO II)

21A07-2 is a half sized mounting plate used to mount OmniLT controllers in Leviton and "open house" enclosures.

20A07-2 is a full size mounting plate used to mount Omni II and OmniPro II controllers, and the 17A00 Expansion Enclosure, in Leviton, OnQ, Siemon, UStec and "open house" enclosures.

Both models come with manuals, accessories, and wiring diagrams for the inside of the enclosure door. They also include a discreet "HAI Automation Onboard®" label for the outside of the enclosure.

Whole Home Audio System

Hi-Fi by HAI is an affordable high fidelity Whole Home Audio distribution system that allows your music to live anywhere in your home and still be enjoyed everywhere in your home. It has 4 zones and 4 sources, expandable to 8 zones and 6 sources.

The wall mounted Volume and Source Control (VSC) features an easy-to-use turn knob for music selection and volume control and also acts as an infrared repeater for source component control. HAI selected a knob design for the VSC because of its elegant, uncluttered style and ease of operation. Simply press the knob to change music sources. Turn it to adjust volume. Press and hold to adjust bass, treble, balance, and turn the entire system on and off. The blue display shows the source and volume level. For source control, the VSC has routed infrared repeating built in. Simply use your existing remote control to change selections, pause, play, etc.

Remote Input Modules (RIMs) can be located throughout the house to pick up music from your home theater, kitchen TV, computer, personal music player, satellite radio, Media Center, CD player – any source with an audio output. Color change kits for the VSC and RIM are available in 4 colors to match interior décor. RIMs feature a stereo audio input jack and a routed IR emitter jack (flasher included) to control source equipment.

HAI includes a basic remote that can select source and volume with the Hi-Fi system. An optional, programmable remote can control these and the source equipment.

Hi-Fi by HAI is plug and play with HAI's Omni and Lumina automation controllers. The controller can set each zone's source and volume for parties, watching TV, morning news and goodnight, for example, to coordinate the audio system with your activities.

HAI's many user interfaces will also control the Hi-Fi, including the OmniTouch touchscreen, consoles and keypads, Snap-Link, Home Control for Windows Media Center and Web-Link II.

Based on a high efficiency digital design, Hi-Fi by HAI requires no audio rack to run unsightly wires to. The main unit is mounted on a closet wall or in a structured wiring enclosure, so the wiring is hidden.

Power is 40 watts RMS per zone at 4 ohms. The audio signal from the source is buffered at the RIM, and then travels over Cat5 to the main unit. The VSC is also connected to the main unit using Cat5. The power amplifiers are in the main unit, (not in the VSC) so amplifier power is not hindered by Cat5 wire. Speakers are connected to the main unit using standard speaker wire. There are two variable outputs (Zones 1 and 8) for connection to external power amplifiers, and a page/mute input. Signals from remote controls are picked up by a sensor in the VSC and routed to the RIM that the VSC has selected as its source. Signals for source equipment are sent out the "IR Out" port on the RIM to control the source.

The main unit is powered by house current (100 -240 VAC 50/60 Hz).

Visit us: www.homeauto.com
Email us: sales@homeauto.com
Call us: (800) 229.7256

Hi-Fi by HAI Part numbers

62A00-1, Hi-Fi by HAI 4 Zone, 4 Source Kit in Enclosure. Includes Hi-Fi Main board assembly with 4 installed Zone Amplifier Cards in Enclosure, 4 RIMS, 4 VSCs, Power Supply, Remote Control, cable for HAI controllers, manuals.

62A00-2, Hi-Fi by HAI 4 Zone, 4 Source Kit for Structured Wiring Enclosures. Hi-Fi Main Board Assembly with 4 installed Zone Amplifier Cards on Universal Mounting Plate, 4 RIMs, 4 VSCs, Power Supply, Remote Control, cable for HAI controllers, manual.

62A12-1, Hi-Fi by HAI Expansion Kit (to 8 zone, 6 source). 4 Zone Amplifier Cards, 2 RIMs, 4 VSCs, Power Supply, manuals.

62A01-1, Hi-Fi Zone, 4 Zone, 4 Source Main Assembly. Hi-Fi Main Assembly with 4 installed Zone Amplifier Cards.

62A02-1, Zone Amplifier Card (ZAC). Zone Amplifier Card for 1 Stereo zone, instructions.

62A03-1, Volume Source Control (VSC). Rotary volume control with Push Source Select and IR receiver, Decora style, White.

62A04-1, Remote Input Module (RIM). Remote Audio Input/IR output Module, Decora style, White, IR flasher.

62A05-1, Remote Control. Remote Control for volume and source select.

62A06-1, Programmable Remote Control. Remote Control for volume and source select with programmable source control functions.

62A07-1, Power Supply. Universal Power supply for Hi-Fi zones 1 - 4 or 5 -8.

62A08-1, IR Flasher. IR flasher (emitter) with 6 foot cord.

62A09-1, Vented Enclosure. Enclosure for Hi-Fi with vents, door latch mounting plate, hardware kit and instructions.

20A07-2, Universal Mounting Plate. Used to mount Hi-Fi main board assembly in Leviton, OnQ, UStec and "open house" type structured wiring enclosures.

62A14-1,Hi-Fi by HAI Retractable Cables. 3.5 mm male to 2 RCA male patch cable. Extends to 4 feet. Use to connect TVs, CD players, home theater and stereo components to Hi-Fi

62A13-1,Hi-Fi by HAI Retractable Cables. 3.5 mm male mm male to 3.5 mm male stereo patch cable. Extends to 4 feet. Used to connect MP3 players, iPods, computers with headphone and/or audio outputs to Hi-Fi.

COLOR CHANGE KITS

62A10-WHCS, RIM color change kit, White, case of 12. Case of 12 bezels for 62A04-1 Remote Input Modules, instructions.

62A10-IVCS, RIM color change kit, Ivory, case of 12. Case of 12 bezels for 62A04-1 Remote Input Modules, instructions.

62A10-ALCS, RIM color change kit, Almond, case of 12. Case of 12 bezels for 62A04-1 Remote Input Modules, instructions.

62A10-BLCS, RIM color change kit, Black, case of 12. Case of 12 bezels for 62A04-1 Remote Input Modules, instructions.

62A11-WHCS, VSC color change kit, White, case of 12. Case of 12 bezels for 62A03-1 Volume Source Controls, instructions.

62A11- IVCS, VSC color change kit, Ivory, case of 12. Case of 12 bezels for 62A03-1 Volume Source Controls, instructions.

62A11-ALCS, VSC color change kit, Almond, case of 12. Case of 12 bezels for 62A03-1 Volume Source Controls, instructions.

62A11-BLCS, VSC color change kit, Black, case of 12. Case of 12 bezels for 62A03-1 Volume Source Controls, instructions.

Available December 2006. Specification subject to change.

HAI lighting control™

Award-wining technology since 1985

Description

HAI Lighting Control (HLC) is a family of lighting control products that deliver high performance at an affordable price. They can be used as stand alone, with HAI controllers or with other controllers that are UPB compatible. They use standard wiring techniques for easy retrofit.

All HLC products….

- use UPB, a digital communications standard for lighting and home control that ensures superior reliability
- can be used in new and existing homes with standard electrical wiring
- have passed extensive testing and industry standards, such as UL, CE, and Energy Star

HLC provides lighting control either room by room or for the whole house. HLC “smart switches” and room controllers provide modular options; set elegant lighting scenes for each room, adding as needs change. HLC "smart" switches and room controllers let you easily set elegant lighting scenes for each room, without the use of complicated software programs. The HLC product line replaces standard "on/off" lighting switches, and gives you the option of saving specific lighting configurations or "scenes" according to time of day or occasion.

Or enjoy affordable whole house lighting control with the HLC house controller; indoor and outdoor lighting can be coordinated and set by schedule, time of day, or event.

HAI lighting control™

The HLC product line consists of the following:

HLC Dimmers & Switches

35A00-1 600W Dimmer
600 Watt UPB Dimmer, white paddle, connectors, instructions

35A00-1CS 600W Dimmer
- Case of 35A00-1 600W Dimmers

35A00-3 600W Non-Dimming Switch
600 Watt UPB Switch, Non-Dimming for compact/fluorescent, white paddle, connectors, instructions

35A00-3CS 600W Non-Dimming Switch
- Case of 35A00-3 600W Non-Dimming Switches

40A00-1 15A Relay Switch, 15A UPB Relay Switch for motors & fans, white paddle, connectors, instructions

40A00-1CS 15A Relay Switch
- Case of 12 40A00-1 15A Relay Switches

37A00-1 Auxiliary Switch
White Auxiliary switch for remote operation of 35A00 and 40A00 dimmers and switches, connectors, instructions

37A00-1CS Auxiliary Switch
- Case of 12 37A00-1 Auxiliary Switches

55A00-1 color code 1000W Dimmer
1000 Watt UPB Dimmer, choose color, connectors, instructions

55A00-1 color code 1500W Dimmer
1500 Watt UPB Dimmer, choose color (white and ivory only), connectors, instructions

55A00-3 color code
2400W Dimmer

2400 Watt UPB Dimmer, choose color (white and ivory only), connectors, instructions

55A00-1, 55A00-2, and 55A00-3 Dimmers must be ordered in the desired color. Available Colors in the following color codes:

White	WH	Ivory	IV
Almond	AL	Brown	BR
Black	BL	Gray	GR

HLC Controllers

38A00-1 Room Controller, 6-Button UPB
Room Controller with blue LED indicators, connectors, instructions

38A00-1CS Room Controller 6-Button
- Case of 12 38A00-1Room Controllers

38A00-2 House Controller, 8-Button UPB
House Controller with blue LED indicators, connectors, instructions

38A00-2CS House Controller 8-Button
- Case of 12 38A00-2 House Controllers

38A06-2 Keypad Custom Engraving Kit Coupon & instructions for custom laser engraved buttons for 6-Button Room Controller & 8-Button House Controller

HLC Accessories

36A00-1 Powerline Interface Module (PIM)
UPB PIM with cable and instructions for use with Omni LT, Omni II, Omni IIe, OmniPro II, Lumina, and Lumina Pro

36A00-1CS Powerline Interface Module (PIM)
- Case of 12 36A00-1 Powerline Interface Modules

36A05-2 UPB PIM to PC Cable Kit - 7 foot cable connects HAI UPB PIM (36A00-1) to DB-9 serial port on a PC for use with UPStart configuration software or to the DB-9 serial port on a Model 10A17-1 Serial Interface

36A10-1 HLC Expansion Kit for Omni LT
10A17-1 Serial Interface, cable, & PIM to add HLC to Omni LT

39A00-1 UPB Phase Coupler
Phase Coupler, UPB for 120/240V electrical systems

39A00-1CS UPB Phase Coupler
- Case of 12 39A00-1 Phase UPB Couplers

Switch Color Change Kits

***All Kits include:** Bezel assembly for 35A00, 37A00, & 40A00 series switches – Case of 12 Paddles

35A14-ALCS	Switch Color Change Kit, Almond
35A14-BLCS	Switch Color Change Kit, Black
35A14-BRCS	Switch Color Change Kit, Brown
35A14-GRCS	Switch Color Change Kit, Gray
35A14-IVCS	Switch Color Change Kit, Ivory
35A14-WHCS	Switch Color Change Kit, White

CONTROLLER

Lumina	**44A00-1**
Lumina Pro	**44A00-2**

ROOM CONTROLLER

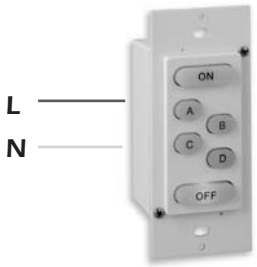

HOUSE CONTROLLER

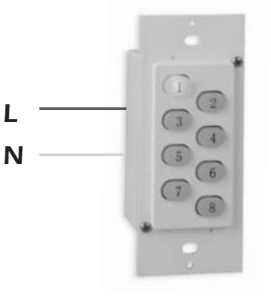

MODE CONTROLLER

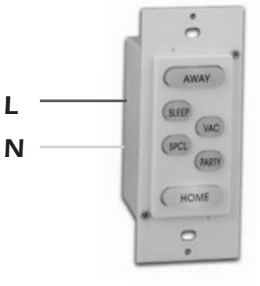

DIMMERS & RELAY SWITCHES *(all Models)*

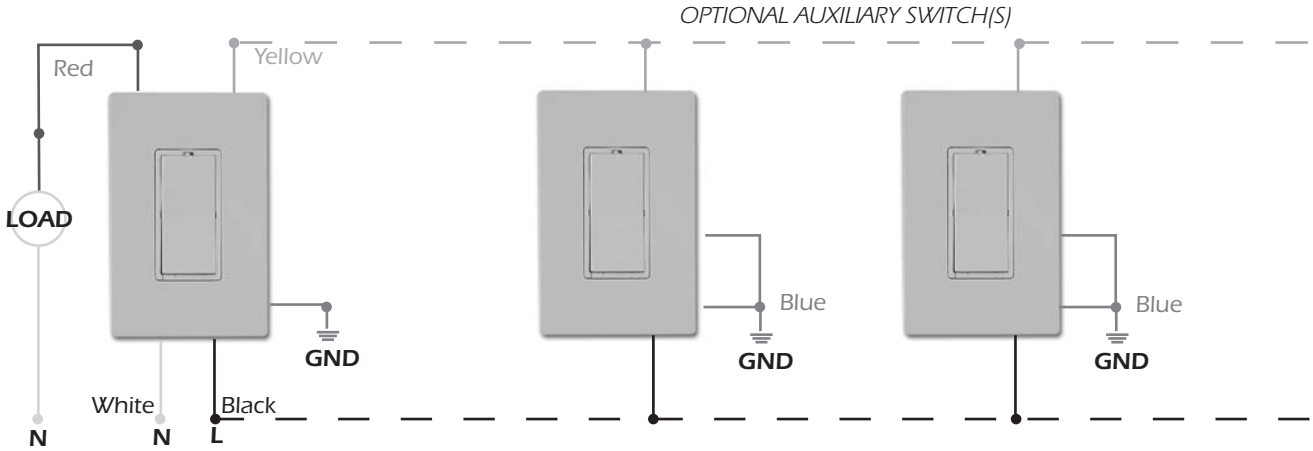

LUMINA CONTROLLER

- Lumina communicates with devices with UPB. No new wires are required.
- Install the Lumina Controller in a closet or basement. Install the switches and room controllers.
- Program on the keypad using new Lumina QuickSet feature. That's it!

PROGRAMMING KEYPAD

Plug into duplex outlet

LUMINA PRO

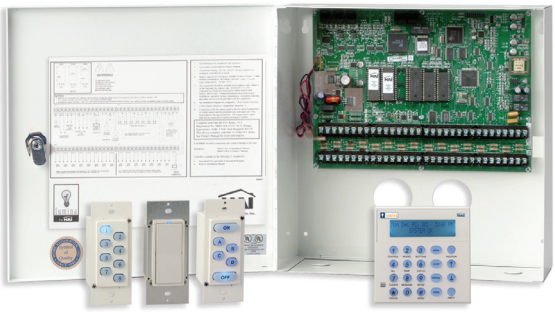

DESCRIPTION

The Lumina Pro is HAI's top-of-the-line lighting and automation controller. It is designed for large residences and small commercial applications. The system provides elegance, convenience and safety to any new or existing home. Lumina Pro is primarily intended for lighting control with easy installation and set up. However, its unrivaled feature set and options make it a comprehensive smart house system.

Lumina Pro provides HLC Configuration, a set-up feature that configures HLC Dimmers, Switches, Room and House controllers (devices). Lumina Pro makes initial installation easy by configuring the addresses and links in each HLC device automatically. Once configured by Lumina Pro, adjustments to room scenes are very simple: just tap a scene button five times to memorize the settings of the lights.

At the heart of Lumina Pro are six standard modes: Home, Sleep, Away, Vacation, Party and Special. These modes can be activated at the touch of a button or by time schedule or event. The system includes HAI's Advanced Control Programming (ACP) logic that allows installers and homeowners to set schedules and actions performed by the system, and add new macros or modes as desired. Lumina Pro has an astronomical clock and automatic daylight savings for accurate dusk to dawn lighting control year round. Optional wireless door contacts and motion detectors add occupancy based lighting control.

All of Lumina Pro's features can be programmed on-site, without a computer, using the included LCD Keypad. A new "quick-set" feature simplifies naming light switches on the keypad. If desired, programs can also be created and stored on a personal computer with Lumina set-up software.

Lumina Pro supports HAI Lighting Control (HLC) devices using UPB, a new digital communications technology that sends lighting control signals over your existing house wiring. It is ideal for new or existing homes and easy to install. Lumina Pro can also operate lighting devices by other manufacturers, including X-10 based, ALC hardwire, RF, custom hardwire and others.

With the optional OmniTouch touch screens Lumina Pro can connect with Multi-Room Audio/Video products for whole house control of music. Finally, an optional telephone interface allows you to call in and remotely control your home using a cellular phone. It is UL-Listed for Energy Management, and supports numerous Omni Family Accessories for future expansion. Lumina Pro—lighting control from the company that's been the price/performance leader since 1985.

LIGHTING CONTROL FEATURES:

- HLC configuration
  - 31 rooms with Room Controller and up to 217 loads
  - up to 30 House Controllers
- Configurable in groups of 16 loads for:
  - HAI Lighting Control (HLC) 217 loads max
  - Standard UPB 256 loads max
  - Two-way X10 (optional) 256 loads max
  - ALC hardwire (optional) 248 loads max
- 8 expandable to 136 voltage outputs for triggering hard-wire relays
- Real-time clock with battery backup
- Sunrise/sunset calculation
- Automatic daylight savings time adjustment
- Lumina Pro automatically configures HLC devices
- Time, Sunrise, Sunset, optional outdoor temperature display
- Status display (on, off, level, mode etc.)
- Lights can be set to scenes of varying brightness, with Level, Ramp and Scene Support for architectural quality lighting
- Lights, control outputs and modes can be scheduled by time, sunrise, sunset, and date or day of week, as well as various system events
- 1500 lines of non-volatile ACP control program storage
- Commands (immediate and scheduled) include:
  - on, off, dim, brighten, level, scene and ramp rate
  - timed on, off, dim, bright
  - activate a button (macro)
  - Change system modes, zone status, flags, counters, and timers.
  - With options: change settings, mode, fan for one or all thermostats, Say, display or place a call with a message
- Supports HAI Pro-Link, allowing two-way serial communications w/ other controllers using ASCII messages
- Event button capability ("Scenes" or "Macros") allows a series of commands to be executed at once: create lighting scenes, occupancy modes, adjust temps, etc. Initiated by:
  - switches, dimmers, room and house controllers
  - keypad, touchscreen, computer, web-browser, or telephone command
  - a door open or closed, motion detected, a mode change (i.e. day, away, vacation)
  - a time schedule, sunrise, sunset
  - incoming contact closure signals or other internal and external events

- Enhanced ACP includes new commands for "real time pricing" of energy costs, and allows two conditionals per line for easier programming
- Optional Two-Way X-10 allows Lumina Pro to receive signals for status tracking, use as program triggers, features collision detection and retry for reliability
- Expansion port for future SCP, UPnP, LonWorks or other interface
- Ethernet port supports 3 sessions simultaneously
- 8 Hardwire Outputs, expandable to 136, fully configurable:
  - control output for automation
  - temperature control
  - indicators
- Lumina LCD Keypads
  - surface with flush mount kits available
  - 4 wire connection, independent operation, 16 max
  - configurable beeper, viewing angle, backlighting
- Six modes: home, sleep, party, away, vacation, special
- 16 (expandable to 176) inputs for
  - indoor, outdoor or water temperature
  - humidity sensors
  - door, window, motion detectors for energy management and occupancy detection
- Connect to existing security system for
  - lights on for alarm and safe exit
  - flash outdoor light to signal responding officers
  - shut off air and heat to stop spread of smoke
- Optional Wireless Receiver allows lighting control by motion detection and door openings and closings

OPTIONAL TELEPHONE CONTROL FEATURES

- Works with Touch-Tone phones inside or away from the premises with access code
- Compatible with answering machines, answering services
- From a cell phone you can:
  - change modes, adjust temperatures with optional thermostat control, turn lights on for unexpected guests
  - hear complete status of system, outdoor temperature
- Can call pagers, and be programmed to make a voice call based on events (example: call if motion during "away" mode; flood sensor activated, "no activity" for elderly care)

38A00-1 Room Controller | 35A00-1 600W Dimmer | 38A00-2 House Controller

Lumina Pro is primarily intended to support HAI's HLC switches, room controllers, and house controllers. It can also operate lighting devices by other manufacturers, including X-10 based devices, ALC, and others.

RELIABILITY FEATURES

- Designed for continuous, trouble free operation
- Backup battery included
- Fuse-less design, short circuit proof power supply and outputs, reset button for shorted outputs, short circuit indicator light
- All inputs protected against static, RFI, surges and lightning
- Watchdog timer, non-volatile EEPROM storage for all programs, self-diagnostic software, low voltage cut out for system integrity

EASE OF USE FEATURES

- Text and voice descriptions for all inputs, loads, macros, temperatures, messages
- Keypad display shows menus to guide users during use
- Minimum keystrokes for common functions
- Optional wireless keyfob for lighting control available
- 500+ word speech vocabulary (with opt. Telephone control)

COMPUTER INTERFACE

- Ethernet Port built-in for connection to network
- Two built-in serial ports support Omni-Link and Pro-Link, with jumper selectable RS-232 or RS-485. Can be used for programming, monitoring, connection to HAI Web-Link II, personal computers, Connectivity Partner options such as touch screens, voice recognition, infra-red controls
- Built in high-speed modem (V32.bis) for local or remote (with security code) access to system using personal computer and Lumina set-up software
- Everything in Lumina Pro can be programmed using Lumina set-up software for personal computers

PART NUMBERS

- 44A00-2 Lumina Pro includes:
  - Power Supply: Plug-in transformer, 110 VAC, 50/60 Hz, LCD Keypad, UPB phase coupler, set-up software, serial cable
  - Battery: 12V, 5 Ah sealed rechargeable
  - UPB Powerline Interface Module (PIM)

OPTIONS:

- 45A00-1: Supervised Wireless Receiver
- 10A11-1: Two-Way Voice Module
- 10A06: 16 Zone Hardwire Expansion Module
- 1108: HAI Web Link II Software
- 1109: Home Control for Windows Media Center Software
- 17A00-1: 16 Zone / 16 Output Expansion Enclosure
- 25A00-2: ALC Lighting Control Interface (4 branch)
- 44A01-1: Telephone Control Kit
- 10A09-7: Two-way X-10 Transceiver Kit

APPROVALS

- UL Energy Management
- FCC (USA) • ICCS-03 (Canada)
- CE (Europe): EN50081-1, EN50082-1, EN50130-4, EN55022 Electromagnetic Compatibility, Emissions & Immunity

LUMINA PRO

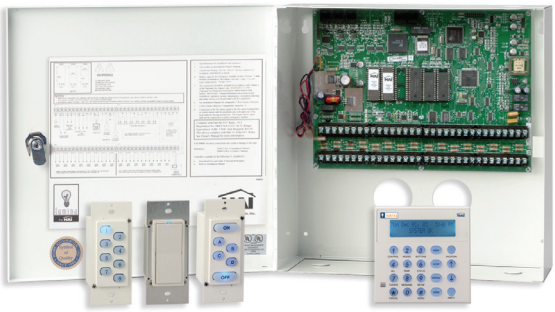

DESCRIPTION

The Lumina Pro is HAI's top-of-the-line lighting and automation controller. It is designed for large residences and small commercial applications. The system provides elegance, convenience and safety to any new or existing home. Lumina Pro is primarily intended for lighting control with easy installation and set up. However, its unrivaled feature set and options make it a comprehensive smart house system.

Lumina Pro provides HLC Configuration, a set-up feature that configures HLC Dimmers, Switches, Room and House controllers (devices). Lumina Pro makes initial installation easy by configuring the addresses and links in each HLC device automatically. Once configured by Lumina Pro, adjustments to room scenes are very simple: just tap a scene button five times to memorize the settings of the lights.

At the heart of Lumina Pro are six standard modes: Home, Sleep, Away, Vacation, Party and Special. These modes can be activated at the touch of a button or by time schedule or event. The system includes HAI's Advanced Control Programming (ACP) logic that allows installers and homeowners to set schedules and actions performed by the system, and add new macros or modes as desired. Lumina Pro has an astronomical clock and automatic daylight savings for accurate dusk to dawn lighting control year round. Optional wireless door contacts and motion detectors add occupancy based lighting control.

All of Lumina Pro's features can be programmed on-site, without a computer, using the included LCD Keypad. A new "quick-set" feature simplifies naming light switches on the keypad. If desired, programs can also be created and stored on a personal computer with Lumina set-up software.

Lumina Pro supports HAI Lighting Control (HLC) devices using UPB, a new digital communications technology that sends lighting control signals over your existing house wiring. It is ideal for new or existing homes and easy to install. Lumina Pro can also operate lighting devices by other manufacturers, including X-10 based, ALC hardwire, RF, custom hardwire and others.

With the optional OmniTouch touch screens Lumina Pro can connect with Multi-Room Audio/Video products for whole house control of music. Finally, an optional telephone interface allows you to call in and remotely control your home using a cellular phone. It is UL-Listed for Energy Management, and supports numerous Omni Family Accessories for future expansion. Lumina Pro—lighting control from the company that's been the price/performance leader since 1985.

LIGHTING CONTROL FEATURES:

- HLC configuration
  - 31 rooms with Room Controller and up to 217 loads
  - up to 30 House Controllers
- Configurable in groups of 16 loads for:
  - HAI Lighting Control (HLC) 217 loads max
  - Standard UPB 256 loads max
  - Two-way X10 (optional) 256 loads max
  - ALC hardwire (optional) 248 loads max
- 8 expandable to 136 voltage outputs for triggering hard-wire relays
- Real-time clock with battery backup
- Sunrise/sunset calculation
- Automatic daylight savings time adjustment
- Lumina Pro automatically configures HLC devices
- Time, Sunrise, Sunset, optional outdoor temperature display
- Status display (on, off, level, mode etc.)
- Lights can be set to scenes of varying brightness, with Level, Ramp and Scene Support for architectural quality lighting
- Lights, control outputs and modes can be scheduled by time, sunrise, sunset, and date or day of week, as well as various system events
- 1500 lines of non-volatile ACP control program storage
- Commands (immediate and scheduled) include:
  - on, off, dim, brighten, level, scene and ramp rate
  - timed on, off, dim, bright
  - activate a button (macro)
  - Change system modes, zone status, flags, counters, and timers.
  - With options: change settings, mode, fan for one or all thermostats, Say, display or place a call with a message
- Supports HAI Pro-Link, allowing two-way serial communications w/ other controllers using ASCII messages
- Event button capability ("Scenes" or "Macros") allows a series of commands to be executed at once: create lighting scenes, occupancy modes, adjust temps, etc. Initiated by:
  - switches, dimmers, room and house controllers
  - keypad, touchscreen, computer, web-browser, or telephone command
  - a door open or closed, motion detected, a mode change (i.e. day, away, vacation)
  - a time schedule, sunrise, sunset
  - incoming contact closure signals or other internal and external events

- Enhanced ACP includes new commands for "real time pricing" of energy costs, and allows two conditionals per line for easier programming
- Optional Two-Way X-10 allows Lumina Pro to receive signals for status tracking, use as program triggers, features collision detection and retry for reliability
- Expansion port for future SCP, UPnP, LonWorks or other interface
- Ethernet port supports 3 sessions simultaneously
- 8 Hardwire Outputs, expandable to 136, fully configurable:
  - control output for automation
  - temperature control
  - indicators
- Lumina LCD Keypads
  - surface with flush mount kits available
  - 4 wire connection, independent operation, 16 max
  - configurable beeper, viewing angle, backlighting
- Six modes: home, sleep, party, away, vacation, special
- 16 (expandable to 176) inputs for
  - indoor, outdoor or water temperature
  - humidity sensors
  - door, window, motion detectors for energy management and occupancy detection
- Connect to existing security system for
  - lights on for alarm and safe exit
  - flash outdoor light to signal responding officers
  - shut off air and heat to stop spread of smoke
- Optional Wireless Receiver allows lighting control by motion detection and door openings and closings

OPTIONAL TELEPHONE CONTROL FEATURES

- Works with Touch-Tone phones inside or away from the premises with access code
- Compatible with answering machines, answering services
- From a cell phone you can:
  - change modes, adjust temperatures with optional thermostat control, turn lights on for unexpected guests
  - hear complete status of system, outdoor temperature
- Can call pagers, and be programmed to make a voice call based on events (example: call if motion during "away" mode; flood sensor activated, "no activity" for elderly care)

38A00-1 Room Controller | 35A00-1 600W Dimmer | 38A00-2 House Controller

Lumina Pro is primarily intended to support HAI's HLC switches, room controllers, and house controllers. It can also operate lighting devices by other manufacturers, including X-10 based devices, ALC, and others.

RELIABILITY FEATURES

- Designed for continuous, trouble free operation
- Backup battery included
- Fuse-less design, short circuit proof power supply and outputs, reset button for shorted outputs, short circuit indicator light
- All inputs protected against static, RFI, surges and lightning
- Watchdog timer, non-volatile EEPROM storage for all programs, self-diagnostic software, low voltage cut out for system integrity

EASE OF USE FEATURES

- Text and voice descriptions for all inputs, loads, macros, temperatures, messages
- Keypad display shows menus to guide users during use
- Minimum keystrokes for common functions
- Optional wireless keyfob for lighting control available
- 500+ word speech vocabulary (with opt. Telephone control)

COMPUTER INTERFACE

- Ethernet Port built-in for connection to network
- Two built-in serial ports support Omni-Link and Pro-Link, with jumper selectable RS-232 or RS-485. Can be used for programming, monitoring, connection to HAI Web-Link II, personal computers, Connectivity Partner options such as touch screens, voice recognition, infra-red controls
- Built in high-speed modem (V32.bis) for local or remote (with security code) access to system using personal computer and Lumina set-up software
- Everything in Lumina Pro can be programmed using Lumina set-up software for personal computers

PART NUMBERS

- 44A00-2 Lumina Pro includes:
  - Power Supply: Plug-in transformer, 110 VAC, 50/60 Hz, LCD Keypad, UPB phase coupler, set-up software, serial cable
  - Battery: 12V, 5 Ah sealed rechargeable
  - UPB Powerline Interface Module (PIM)

OPTIONS:

- 45A00-1: Supervised Wireless Receiver
- 10A11-1: Two-Way Voice Module
- 10A06: 16 Zone Hardwire Expansion Module
- 1108: HAI Web Link II Software
- 1109: Home Control for Windows Media Center Software
- 17A00-1: 16 Zone / 16 Output Expansion Enclosure
- 25A00-2: ALC Lighting Control Interface (4 branch)
- 44A01-1: Telephone Control Kit
- 10A09-7: Two-way X-10 Transceiver Kit

APPROVALS

- UL Energy Management
- FCC (USA) • ICCS-03 (Canada)
- CE (Europe): EN50081-1, EN50082-1, EN50130-4, EN55022 Electromagnetic Compatibility, Emissions & Immunity

HAI UPB™ Wall Switch and Auxiliary Switch
Installation and Operating Instructions

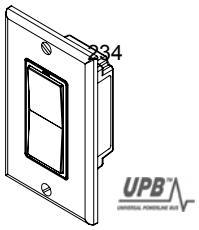

For the following Models:

35A00-1 HAI 600W Dimmer Switch, 35A00-3 HAI 600W Non-Dimming Switch (collectively referred to as HAI UPB™ Wall Switch, in this document), and 37A00-1 HAI Auxiliary Switch

READ THESE INSTRUCTIONS BEFORE INSTALLING DEVICE

This HAI UPB™ Wall Switch and Auxiliary Switch is intended for installation in accordance with the National Electrical Code and local codes and regulations. It is recommended that a qualified electrician perform this installation. Retain these instructions for reference.

To reduce the risk of overheating and possible damage to other equipment, when configured as dimming-capable, do not install to control a receptacle, a motor-operated appliance, a fluorescent lighting fixture, or a transformer-supplied appliance.

This product is for indoor use only. Connect only copper or copper clad wire to this device.

Important Notes Prior To Installation

1. All HAI UPB™ Wall Switches require a neutral (white) connection wire.

2. Be sure that all power to the load has been disconnected by turning off the circuit breaker. Installing an HAI UPB™ Wall Switch or Auxiliary Switch with power on may expose you to dangerous voltage and may damage the device.

HAI UPB™ Wall Switch Overview

The HAI UPB™ Wall Switch (Figure 1) allows for local control of lighting by using the Decora-style rocker switch. It also incorporates the UPB™ two-way powerline communication technology that gives it the ability to be remotely controlled by UPB™ compatible controllers. The HAI UPB™ Wall Switch is also capable of transmitting UPB™ messages (including current light level) when the rocker switch is turned on, turned off, brightened, or dimmed.

Each switch can be configured to custom fit an individual's lifestyle and desires. The HAI Dimmer Switch is capable of storing up to 16 preset light levels and fade rates to create powerful lighting scenes. The HAI Non-Dimming Switch is used to control such loads as fluorescent lights and ceiling fans.

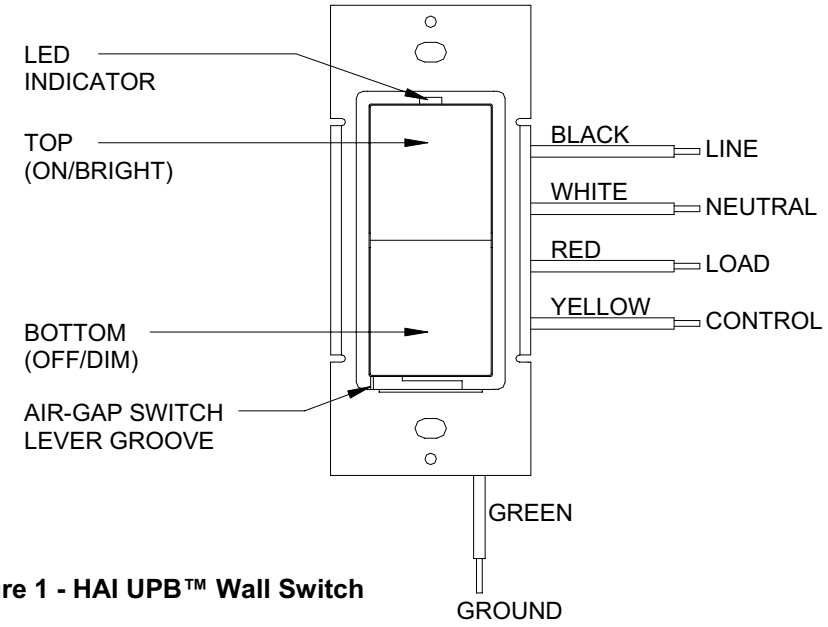

Figure 1 - HAI UPB™ Wall Switch

Setup Mode

To configure the HAI UPB™ Wall Switch using an HAI controller or a PC running the UPB™ UPStart configuration software, it must be put into Setup Mode as follows:

Step	Operation
1	Tap the rocker switch quickly 5 times
2	The HAI UPB™ Wall Switch will flash the lighting load one time and blink its LED blue to indicate that it is in Setup Mode. Note: the switch will automatically exit Setup mode after 5 minutes.

Reset to Factory Default Settings

To reset the HAI UPB™ Wall Switch to factory default settings:

Step	Operation
1	On the HAI UPB™ Wall Switch that you want to reset to factory default, tap the rocker switch quickly 5 times.
2	The HAI UPB™ Wall Switch will flash the lighting load one time and blink its LED blue to indicate that it is ready to be reset.
3	Tap the rocker switch quickly 10 times to reset to factory default setting.
4	The HAI UPB™ Wall Switch will flash the lighting load one time and blink its LED red to indicate that it has been reset.
5	Tap the rocker switch twice to stop the LED from blinking.

SPECIFICATIONS

Model Number	**35A00-1**	**35A00-3**
Incandescent Loads Dimming	Yes	Yes (configurable)
Inductive Loads Dimming	Yes	Yes (configurable)
Florescent Loads Non-Dimming	Yes (configurable)	Yes
Power Maximum Dimming	600W / 600VA	600W / 600VA
Current Maximum Non-Dimming	5A	5A
Connections	18 GA	18 GA
LED Indicator	Yes	Yes
Dimensions	4.1 x 1.75 x 1.45	4.1 x 1.75 x 1.45
Weight	0.25 lb.	0.25 lb.
Mounting	Standard J Box	Standard J Box
Input Power	120 ± 12 VAC	120 ± 12 VAC
Input Frequency	60 ± 3 Hz	60 ± 3 Hz
Operating Temperature	-40 °F to 104 °F	-40 °F to 104 °F

Note: It is normal for this switch to make a slight buzzing sound during operation. It is also normal for the switch and wall plate to feel warm to the touch.

LIMITED WARRANTY

HAI warrants this product against defects in material and workmanship, under normal use and service, for a period of two (2) years from the date of purchase. During the warranty period, HAI will repair or replace, at its sole option, if this product fails due to defect. This warranty does not cover the cost of removal or reinstallation of any product. **This warranty does not cover failure caused by normal wear, damage to the product while in your possession (other than damage caused by defect or malfunction), or by its improper installation, including failure to follow the written installation and operation instructions, alterations, misuse, or abuse.** The remedies provided for in this warranty are the sole and exclusive remedies thereof. In no event shall HAI be liable for incidental expenses or consequential loss or damages. For the complete HAI Warranty for USA policy, see the HAI web site at www.homeauto.com.

Any implied warranties, including warranties of merchantability and fitness for particular use or purpose are limited to a period of two (2) years from purchase date. This warranty gives you specific legal rights, and you may have other legal rights, which vary from state to state. Some limitations may not apply to you.

For warranty and repair service within the continental United States, send defective unit carefully packaged, postage prepaid, along with description of trouble, name, return address, and phone number to: HAI, Repair Department, 4330 Michoud Blvd, New Orleans, LA, 70129. HAI will pay return shipping charges via normal ground service.

Outside of the continental United States: Contact an Authorized Distributor for repair/replacement instructions.

c UL US LISTED

Installation Manual

Digital Whole Home Audio
Distribution System

Document Number 62I00-1 Rev A
October, 2006

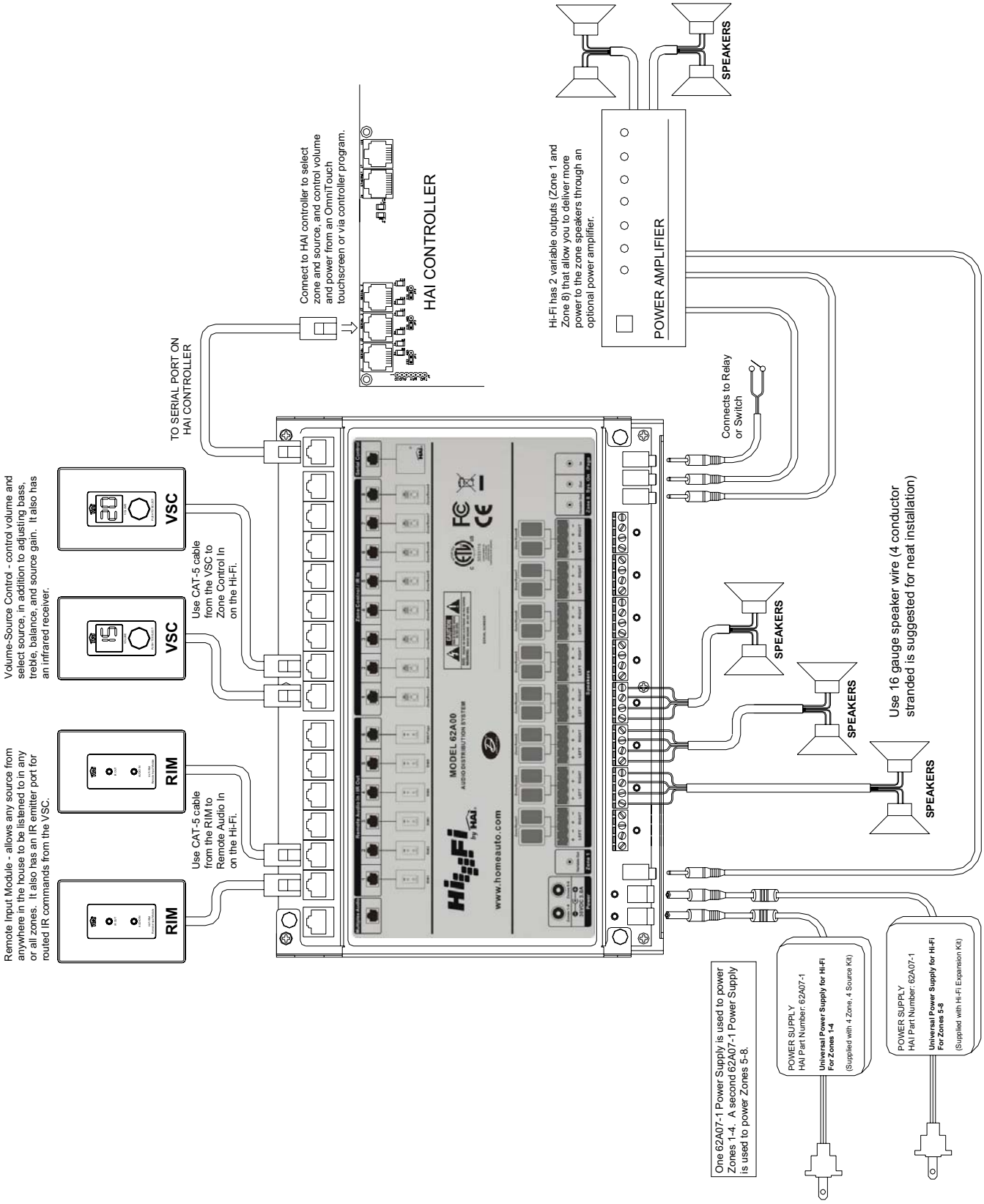

Hi-Fi by HAI Overall Wiring Diagram

Specifications

Zones 1-8 Power Amplifier Outputs

Continuous Average Output Power:	30W (15W x 2) Two channels driven 30-20kHz @1% THD
Rated Distortion (1/2 power):	0.40%
Rated Impedance:	6 Ohms
Damping Factor:	50+
Frequency Response (20-20kHz):	±2dB

Preamplifier Section

Variable output:	0-600mV
Impedance:	600 Ohms

Source Inputs 1-6

Input Impedance:	10K
Input Sensitivity for rated power:	300mV RMS
Input Overload:	3V RMS

Emitter Outputs

Output Drive Current:	100mA
Output Drive Voltage:	5V

System

System On:	5V @ 50mA (Ring = Ground)
Page / Mute input:	Normally open (close to activate)

Power

Power Input:	DC30V⎓ 3.0A Each

Power Supply

Power Supply Input (each):	100-240VAC, 50/60Hz, 120W
Power Supply Output (each):	30VDC, 3 Amps

Power Consumption

All channels driven to full-rated power:	240W
Average operating conditions:	30W
No signal:	Less than 10W

Physical Specifications

Unit Size (in enclosure):	13” W x 13” H x 4.5” D
Unit Size (on mounting plate):	13.25” W x 8.5” H x 3.75” D
Unit Weight (in enclosure):	14 lb.
Unit Weight (on mounting plate):	8 lb.

Model 62A03-1 Volume-Source Control (VSC)

DESCRIPTION

The audio sources can be selected and controlled by any Volume-Source Control (VSC). The VSC provides the capability to change the power state, volume, balance, treble, and bass settings for each zone. Additionally, each VSC include an IR receiver that allows you to remotely control the Hi-Fi system and/or audio sources from any zone in the house.

INSTALLATION

Volume-Source Control (VSC) Units connect directly to the Hi-Fi Main Assembly using Cat 5, unshielded, twisted pair (UTP) for communications. Each end of the wire is terminated with an RJ45 connector. The correct wiring scheme for the Cat 5 cable is standard EIA/TIA 568A. Properly terminating the Cat 5 cable is crucial for the operation of the system.

The total distance of Cat 5 between the Hi-Fi Main Assembly and the VSC units must not exceed 2000 feet. It is best that no single run of Cat 5 exceeds 250 feet.

Insert the RJ45 connector on one end of the cable to zone input jack (1-8) under “Zone Control / IR In” on the Hi-Fi Main Assembly. Insert the RJ45 connector on the other end of the cable to the jack labeled “Zone Control” on the VSC.

CHANGING THE COLOR OF THE VSC

The color of the VSC may be changed to complement the interior décor. The VSC is supplied with a white faceplate, knob, and insert. Additional colors are available; contact your HAI distributor for more information. Change the color of the RIM as follows:

1. Remove the faceplate. Firmly grasp the knob and pull straight outward until the knob is removed.

2. The insert attaches to the VSC with one latch on the right and one on the left. Using a small-bladed screwdriver, gently depress the latch on one side while lifting up on the insert. Once the latches are released on one side, remove the insert from the other side.

3. Align the latches of the new insert to the openings on the RIM and gently snap into place.

4. Insert the new knob onto the volume control shaft. Attach the new faceplate.

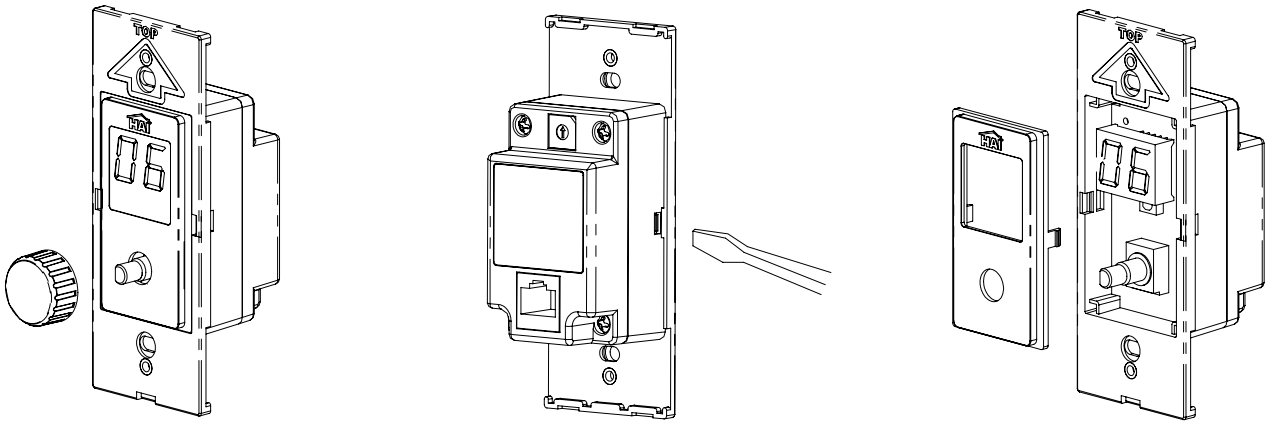

SETTING THE ZONE ADDRESS

Although the Hi-Fi Main Assemble has separate RJ45 connectors for each zone, each VSC must be configured to a specific zone address to establish its location. This setting is made on the back of the VSC using a rotary switch. To set the zone address, place a small screwdriver in the slot on the rotary switch and turn it to the appropriate zone address number 1-8

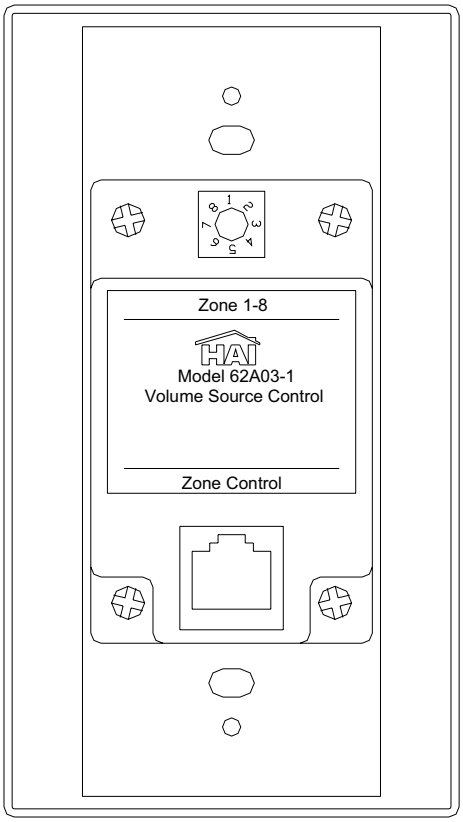

Model 62A04-1 Remote Input Module (RIM)

DESCRIPTION

Each of the six possible audio sources are connected directly to Remote Input Modules (RIM) in rooms that will have music sources that you wish to use. When you plug any music source into a RIM using a standard stereo input jack, it can be shared with any room that has a Volume-Source Control (VSC). Additionally, each RIM features a routed IR emitter jack and includes a flasher to allow you to use the remote control of your source equipment in any room that has a VSC.

INSTALLATION

Remote Input Modules connect directly to the Hi-Fi Main Assembly using Cat 5, unshielded, twisted pair (UTP) for communications. Each end of the wire is terminated with an RJ45 connector. The correct wiring scheme for the Cat 5 cable is standard EIA/TIA 568A. Properly terminating the Cat 5 cable is crucial for the operation of the system.

It is best that no single run of Cat 5 exceeds 500 feet.

Insert the RJ45 connector on one end of the cable to the respective source input jack (1-6) under “Remote Audio In / IR Out” on the Hi-Fi Main Assembly. Insert the RJ45 connector on the other end of the cable to the jack labeled “Remote Audio” on the RIM.

CHANGING THE COLOR OF THE RIM

The color of the RIM may be changed to complement the interior décor. The RIM is supplied with a white faceplate and insert. Additional colors are available; contact your HAI distributor for more information. Change the color of the RIM as follows:

1. Remove the faceplate.

2. The insert attaches to the RIM with one latch on the right and one on the left. Using a small-bladed screwdriver, gently depress the latch on one side while lifting up on the insert. Once the latches are released on one side, remove the insert from the other side.

3. Align the latches of the new insert to the openings on the RIM and gently snap into place.

4. Attach the new faceplate.

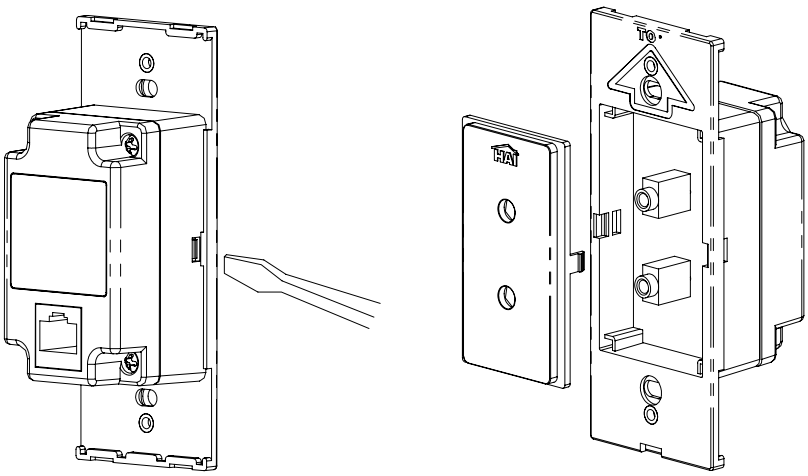

SETTING THE FREQUENCY OF THE IR OUTPUT

When using the RIM to send IR data to source equipment, there are two different IR carrier frequencies in which the RIM can transmit the IR signal. The default setting of 38 kHz is used for most audio sources. However, most cable and satellite converter boxes operate at a higher IR carrier frequency closer to 56 kHz. Each RIM has a jumper that allows you to change the frequency of the IR output when using such devices.

To change the frequency setting, remove the faceplate and insert from the RIM as described under “Changing the Color of the RIM”.

Once The Insert Has Been Removed, Move The Frequency Jumper (CN1) From The “38khz” Position To The “56khz” Position.

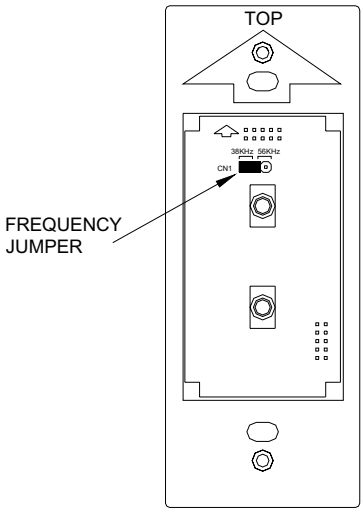

IR OUTPUT

Each RIM ships with an IR flasher (62A08-1). The IR flasher is used for sending IR data to the source equipment. When you point your source equipment remote control at the IR receiver in the VSC and send a signal, the IR data is routed to the appropriate RIM (to which the source is connected), which then sends the IR signal through the IR flasher to the source equipment.

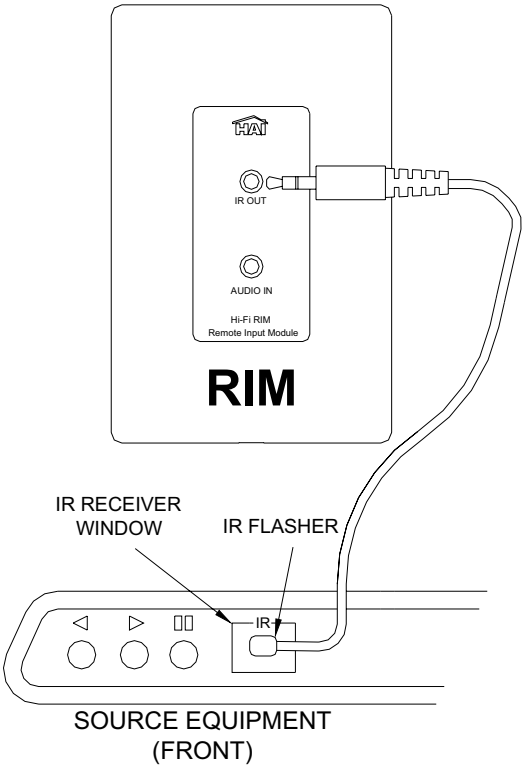

Model 36A00-1 UPB™ Powerline Interface Module

DESCRIPTION

The Model 36A00-1 UPB™ Powerline Interface Module (PIM) is a plug-in module designed to interface to a serial port on an OmniLT, Omni II, or OmniPro II controller to transmit and receive UPB™ signals over the powerline.

INSTALLATION

Plug the Model 36A00-1 UPB™ Powerline Interface Module (PIM) into a 120 VAC outlet. Plug one end of the supplied 6 conductor modular cable to a serial port on the HAI controller and plug the other end into the modular connector on the Model 36A00-1.

Use the 36A05-2 PIM to PC Cable & Connector (purchased separately) to connect the HAI Model 36A00-1 UPB™ Powerline Interface Module (PIM) to a standard DB-9 serial port. The 36A05-2 is used to connect the PIM to the HAI Model 10A17-1 Serial Interface Module for controlling UPB™ devices through an HAI controller, or to a PC for configuring UPB™ devices using the UPB™ UPStart configuration software.

STATUS LED

The Status LED on the Model 36A00-1 will blink red when it transmits a UPB™ signal on the powerline and it will blink green when it receives a valid UPB™ signal over the powerline.

PROGRAM BUTTON

HAI controllers communicate with the Model 36A00-1 UPB™ Powerline Interface Module in Message Mode. While Message Mode is the factory default mode of the PIM, the UPB™ UPStart configuration software uses the Pulse Mode of the PIM. If the PIM is in Pulse Mode when connected to an HAI controller, the "Receive" LED on the HAI Serial port will be on steady. The Program button on the left side of the Model 36A00-1 can be used to set the PIM to factory default (i.e. back to Message Mode). To set the Model 36A00-1 to factory default, do the following:

Step	Operation
1	Press the Program button five (5) times quickly in a row.
2	The LED should start to blink green to indicate it is in Setup Mode.
3	Press the Program button ten (10) times quickly in a row.
4	The LED should start to blink red to indicate that the Factory Defaults have been set.
5	Press the Program button one (1) more time.
6	The LED should stop blinking to indicate that it is ready for normal operation.

Note: It is normal for this module to make a slight buzzing sound during operation.

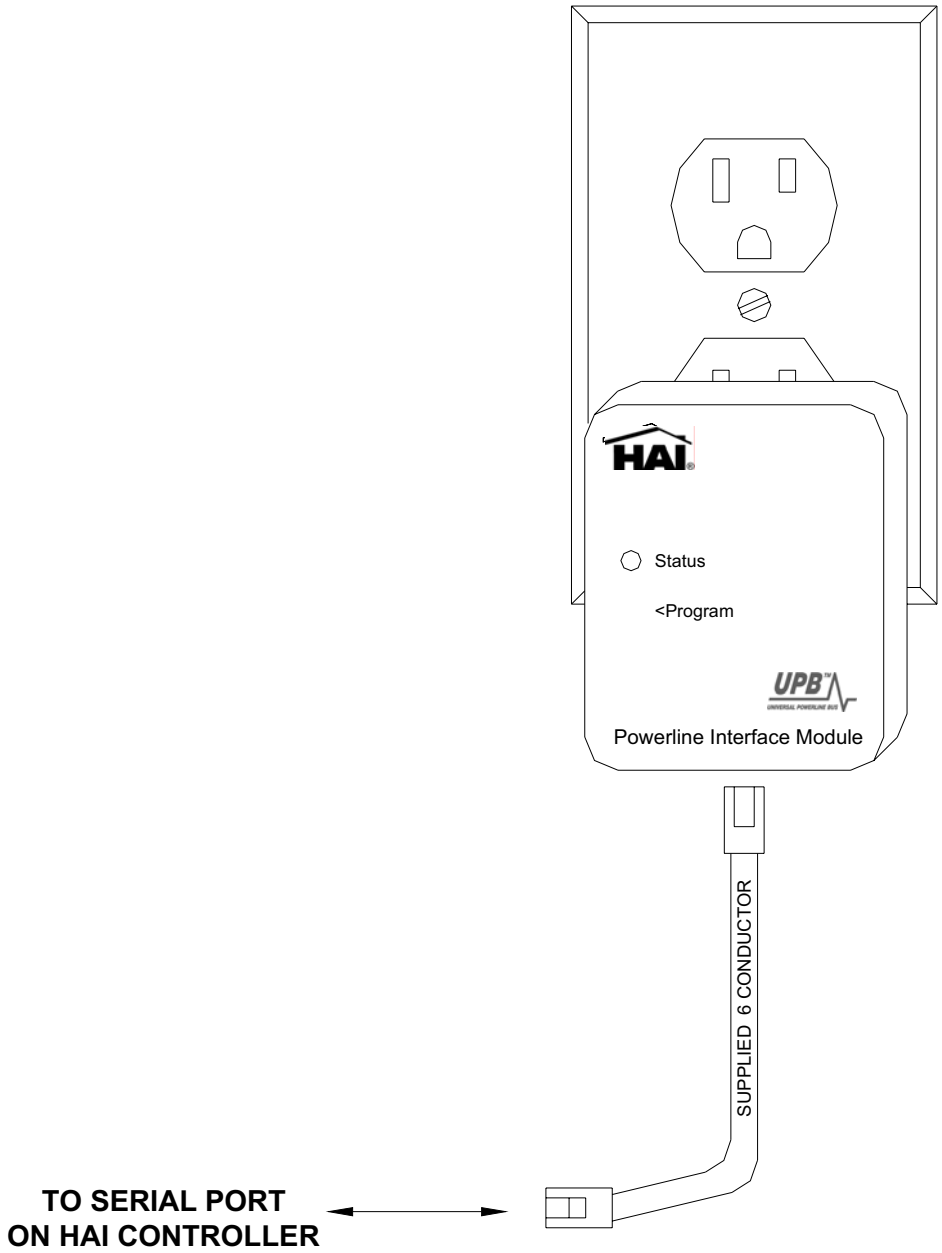

LIMITED WARRANTY

HAI warrants this product against defects in material and workmanship, under normal use and service, for a period of two (2) years from the date of purchase. During the warranty period, HAI will repair or replace, at its sole option, if this product fails due to defect. This warranty does not cover the cost of removal or reinstallation of any product. **This warranty does not cover failure caused by normal wear, damage to the product while in your possession (other than damage caused by defect or malfunction), or by its improper installation, including failure to follow the written installation and operation instructions, alterations, misuse, or abuse.** The remedies provided for in this warranty are the sole and exclusive remedies thereof. In no event shall HAI be liable for incidental expenses or consequential loss or damages. For the complete HAI Warranty for USA policy, see the HAI web site at www.homeauto.com.

Any implied warranties, including warranties of merchantability and fitness for particular use or purpose are limited to a period of two (2) years from purchase date. This warranty gives you specific legal rights, and you may have other legal rights, which vary from state to state. Some limitations may not apply to you.

For warranty and repair service within the continental United States, send defective unit carefully packaged, postage prepaid, along with description of trouble, name, return address, and phone number to: HAI, Repair Department, 4330 Michoud Blvd, New Orleans, LA, 70129. HAI will pay return shipping charges via normal ground service.

Outside of the continental United States: Contact an Authorized Distributor for repair/replacement instructions.

c UL US LISTED

HAI UPB™ Lumina Mode Controller
Installation and Operating Instructions

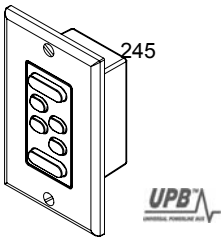

For the following Model:

38A00-3 HAI UPB™ Lumina Mode Controller

READ THESE INSTRUCTIONS BEFORE INSTALLING DEVICE

This HAI UPB™ Lumina Mode Controller is intended for installation in accordance with the National Electrical Code and local regulations. It is recommended that a qualified electrician perform this installation. Retain these instructions for reference.

This product is for indoor use only. Connect only copper or copper clad wire to this device.

Important Notes Prior To Installation

Be sure that all power to the load has been disconnected by turning off the circuit breaker. Installing an HAI UPB™ Lumina Mode Controller with power on may expose you to dangerous voltage and may damage the device.

HAI UPB™ Lumina Mode Controller Overview

The HAI UPB™ Lumina Mode Controller (Figure 1) is used to easily change the mode before leaving your house, going to bed, arriving home, going on vacation, entertaining for the evening, or any other special event. It uses the UPB™ two-way powerline communication technology to communicate with a Lumina controller to initiate programs for preset lights and temperatures.

The HAI UPB™ Lumina Mode Controller has six pushbuttons labeled AWAY, HOME, SLEEP, VAC (Vacation), SPCL (Special), and PARTY. Each pushbutton is slightly backlit so that the buttons can be seen in a dark room. The pushbuttons of the current Lumina Mode will be distinctly illuminated, so that you can always tell which mode you are currently in just by glancing at the Lumina Mode Controller.

To change the current mode from a Lumina Mode Controller, simply press the desired mode button. The new mode button will illuminate and the lighting and temperatures in your home will be changed accordingly.

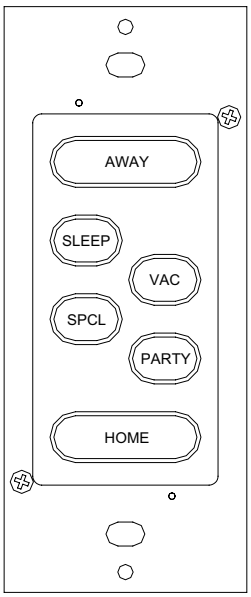

Figure 1 - HAI UPB™ Lumina Mode Controller

Setup Mode

To configure the HAI UPB™ Lumina Mode Controller using a Lumina keypad, it must be put into Setup Mode as follows:

Step	Operation
1	Press and hold the "AWAY" and "HOME" pushbuttons simultaneously for at least 3 seconds.
2	All of the LED indicators will blink to indicate that the HAI UPB™ Lumina Mode Controller is in Setup Mode.

Configuring the HAI UPB™ Lumina Mode Controller from a Lumina Keypad

HAI UPB™ Lumina Mode Controllers reside on the 8th unit in any Room. Configure the HAI UPB™ Lumina Mode Controller on the 8th unit in a Room as follows:

Step	Operation
1	Put the HAI UPB™ Lumina Mode Controller into Setup Mode (as described above).
2	On the Lumina keypad, from the main menu or top-level display, press 6 (STATUS), and then press 1 (CTRL).
3	Enter the Unit Number of the HAI UPB™ Lumina Mode Controller followed by the ' # ' key, and then press ' # # '.
4	The display will provide you with step-by-step configuration status. When complete, the display shows "COMPLETED".

Reset to Factory Default Settings

To reset the HAI UPB™ Lumina Mode Controller to factory default settings:

Step	Operation
1	Press and hold the "AWAY" and "HOME" pushbuttons simultaneously for at least 3 seconds.
2	All of the LED indicators will blink to indicate that the HAI UPB™ Lumina Mode Controller is in Setup Mode.
3	Press and hold the "SLEEP" and "PARTY" pushbuttons simultaneously for at least 3 seconds.
4	The LED indicators will stop blinking and the "SLEEP" and "PARTY" pushbuttons will illuminate to indicate that it has been reset.

SPECIFICATIONS

Model Number	**38A00-3**
Number of Backlit Pushbuttons with LED Indicators	6
Connections	18 GA
Dimensions	4.1 x 1.7 x 1.5
Weight	0.25 lb.
Mounting	Standard J Box
Input Power	120 ± 12 VAC
Input Frequency	60 ± 3 Hz
Operating Temperature	-40 °F to 104 °F

Note: It is normal for this switch to make a slight buzzing sound during operation.

LIMITED WARRANTY

HAI warrants this product against defects in material and workmanship, under normal use and service, for a period of two (2) years from the date of purchase. During the warranty period, HAI will repair or replace, at its sole option, if this product fails due to defect. This warranty does not cover the cost of removal or reinstallation of any product. **This warranty does not cover failure caused by normal wear, damage to the product while in your possession (other than damage caused by defect or malfunction), or by its improper installation, including failure to follow the written installation and operation instructions, alterations, misuse, or abuse.** The remedies provided for in this warranty are the sole and exclusive remedies thereof. In no event shall HAI be liable for incidental expenses or consequential loss or damages. For the complete HAI Warranty for USA policy, see the HAI web site at www.homeauto.com.

Any implied warranties, including warranties of merchantability and fitness for particular use or purpose are limited to a period of two (2) years from purchase date. This warranty gives you specific legal rights, and you may have other legal rights, which vary from state to state. Some limitations may not apply to you.

For warranty and repair service within the continental United States, send defective unit carefully packaged, postage prepaid, along with description of trouble, name, return address, and phone number to: HAI, Repair Department, 4330 Michoud Blvd, New Orleans, LA, 70129. HAI will pay return shipping charges via normal ground service.

Outside of the continental United States: Contact an Authorized Distributor for repair/replacement instructions.

c UL us LISTED

HAI UPB™ 6-Button Room Controller
Installation and Operating Instructions

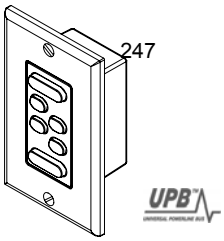

For the following Model:

38A00-1 HAI UPB™ 6-Button Room Controller

READ THESE INSTRUCTIONS BEFORE INSTALLING DEVICE

This HAI UPB™ 6-Button Room Controller is intended for installation in accordance with the National Electrical Code and local regulations. It is recommended that a qualified electrician perform this installation. Retain these instructions for reference.

This product is for indoor use only. Connect only copper or copper clad wire to this device.

Important Notes Prior To Installation

Be sure that all power to the load has been disconnected by turning off the circuit breaker. Installing an HAI UPB™ 6-Button Room Controller with power on may expose you to dangerous voltage and may damage the device.

HAI UPB™ 6-Button Room Controller Overview

The HAI UPB™ 6-Button Room Controller (Figure 1) allows for lighting control of a room where HAI UPB™ Wall Switches have been installed. It uses the UPB™ two-way powerline communication technology to communicate with HAI controllers, UPB™ Wall Switches, and other UPB™ devices on the network.

The HAI UPB™ 6-Button Room Controller has six pushbuttons labeled ON, A, B, C, D, and OFF (although these buttons may be custom engraved). Each pushbutton is slightly backlit so that the buttons can be seen in a dark room. Depending on configuration of the HAI UPB™ 6-Button Room Controller, one or more of the six pushbuttons will be distinctly illuminated, indicating the pushbutton has been pressed or a scene has been selected.

Each lighting scene pushbutton (A-D) can be configured to custom fit an individual's lifestyle and desires. UPB™ Wall Switch Dimmers are capable of storing preset light levels and fade rates to create powerful lighting scenes.

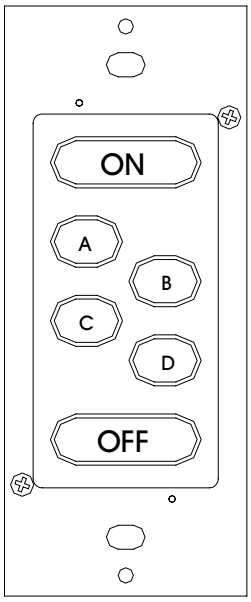

Figure 1 - HAI UPB™ 6-Button Room Controller

Configuring Lighting Scenes

HAI UPB™ 6-Button Room Controllers are designed to work with UPB™ Wall Switch Dimmers to create custom lighting scenes. Each pushbutton on the HAI UPB™ 6-Button Room Controller can be easily configured for new lighting scenes as follows:

Step	Operation
1	Press the pushbutton on the HAI UPB™ 6-Button Room Controller to activate the current scene (preset lighting level) in each of the UPB™ Wall Switch Dimmers.
2	Use the local Decora-style rocker switch on each UPB™ Wall Switch Dimmer(s) to set the desired lighting level(s).
3	Press the pushbutton on the HAI UPB™ 6-Button Room Controller five (5) times quickly.
4	Each UPB™ Wall Switch Dimmer will flash its lighting load one time to indicate that the new level has been configured.

Setup Mode

To configure the HAI UPB™ 6-Button Room Controller using an HAI controller or a PC running the UPB™ UPStart configuration software, it must be put into Setup Mode as follows:

Step	Operation
1	Press and hold the "ON" and "OFF" pushbuttons simultaneously for at least 3 seconds.
2	All of the LED indicators will blink to indicate that the HAI UPB™ 6-Button Room Controller is in Setup Mode.

Reset to Factory Default Settings

To reset the HAI UPB™ 6-Button Room Controller to factory default settings:

Step	Operation
1	Press and hold the "ON" and "OFF" pushbuttons simultaneously for at least 3 seconds.
2	All of the LED indicators will blink to indicate that the HAI UPB™ 6-Button Room Controller is in Setup Mode.
3	Press and hold the "A" and "D" pushbuttons simultaneously for at least 3 seconds.
4	The LED indicators will stop blinking and the "A" and "D" pushbuttons will illuminate to indicate that it has been reset.

SPECIFICATIONS

Model Number	**38A00-1**
Number of Backlit Pushbuttons with LED Indicators	6
Connections	18 GA
Dimensions	4.1 x 1.7 x 1.5
Weight	0.25 lb.
Mounting	Standard J Box
Input Power	120 ± 12 VAC
Input Frequency	60 ± 3 Hz
Operating Temperature	-40 °F to 104 °F

Note: It is normal for this switch to make a slight buzzing sound during operation.

LIMITED WARRANTY

HAI warrants this product against defects in material and workmanship, under normal use and service, for a period of two (2) years from the date of purchase. During the warranty period, HAI will repair or replace, at its sole option, if this product fails due to defect. This warranty does not cover the cost of removal or reinstallation of any product. **This warranty does not cover failure caused by normal wear, damage to the product while in your possession (other than damage caused by defect or malfunction), or by its improper installation, including failure to follow the written installation and operation instructions, alterations, misuse, or abuse.** The remedies provided for in this warranty are the sole and exclusive remedies thereof. In no event shall HAI be liable for incidental expenses or consequential loss or damages. For the complete HAI Warranty for USA policy, see the HAI web site at www.homeauto.com.

Any implied warranties, including warranties of merchantability and fitness for particular use or purpose are limited to a period of two (2) years from purchase date. This warranty gives you specific legal rights, and you may have other legal rights, which vary from state to state. Some limitations may not apply to you.

For warranty and repair service within the continental United States, send defective unit carefully packaged, postage prepaid, along with description of trouble, name, return address, and phone number to: HAI, Repair Department, 4330 Michoud Blvd, New Orleans, LA, 70129. HAI will pay return shipping charges via normal ground service.

Outside of the continental United States: Contact an Authorized Distributor for repair/replacement instructions.

c UL US LISTED

Configuring Lighting Scenes

HAI UPB™ 6-Button Room Controllers are designed to work with UPB™ Wall Switch Dimmers to create custom lighting scenes. Each pushbutton on the HAI UPB™ 6-Button Room Controller can be easily configured for new lighting scenes as follows:

Step	Operation
1	Press the pushbutton on the HAI UPB™ 6-Button Room Controller to activate the current scene (preset lighting level) in each of the UPB™ Wall Switch Dimmers.
2	Use the local Decora-style rocker switch on each UPB™ Wall Switch Dimmer(s) to set the desired lighting level(s).
3	Press the pushbutton on the HAI UPB™ 6-Button Room Controller five (5) times quickly.
4	Each UPB™ Wall Switch Dimmer will flash its lighting load one time to indicate that the new level has been configured.

Setup Mode

To configure the HAI UPB™ 6-Button Room Controller using an HAI controller or a PC running the UPB™ UPStart configuration software, it must be put into Setup Mode as follows:

Step	Operation
1	Press and hold the "ON" and "OFF" pushbuttons simultaneously for at least 3 seconds.
2	All of the LED indicators will blink to indicate that the HAI UPB™ 6-Button Room Controller is in Setup Mode.

Reset to Factory Default Settings

To reset the HAI UPB™ 6-Button Room Controller to factory default settings:

Step	Operation
1	Press and hold the "ON" and "OFF" pushbuttons simultaneously for at least 3 seconds.
2	All of the LED indicators will blink to indicate that the HAI UPB™ 6-Button Room Controller is in Setup Mode.
3	Press and hold the "A" and "D" pushbuttons simultaneously for at least 3 seconds.
4	The LED indicators will stop blinking and the "A" and "D" pushbuttons will illuminate to indicate that it has been reset.

SPECIFICATIONS

Model Number	**38A00-1**
Number of Backlit Pushbuttons with LED Indicators	6
Connections	18 GA
Dimensions	4.1 x 1.7 x 1.5
Weight	0.25 lb.
Mounting	Standard J Box
Input Power	120 ± 12 VAC
Input Frequency	60 ± 3 Hz
Operating Temperature	-40 °F to 104 °F

Note: It is normal for this switch to make a slight buzzing sound during operation.

LIMITED WARRANTY

HAI warrants this product against defects in material and workmanship, under normal use and service, for a period of two (2) years from the date of purchase. During the warranty period, HAI will repair or replace, at its sole option, if this product fails due to defect. This warranty does not cover the cost of removal or reinstallation of any product. **This warranty does not cover failure caused by normal wear, damage to the product while in your possession (other than damage caused by defect or malfunction), or by its improper installation, including failure to follow the written installation and operation instructions, alterations, misuse, or abuse.** The remedies provided for in this warranty are the sole and exclusive remedies thereof. In no event shall HAI be liable for incidental expenses or consequential loss or damages. For the complete HAI Warranty for USA policy, see the HAI web site at www.homeauto.com.

Any implied warranties, including warranties of merchantability and fitness for particular use or purpose are limited to a period of two (2) years from purchase date. This warranty gives you specific legal rights, and you may have other legal rights, which vary from state to state. Some limitations may not apply to you.

For warranty and repair service within the continental United States, send defective unit carefully packaged, postage prepaid, along with description of trouble, name, return address, and phone number to: HAI, Repair Department, 4330 Michoud Blvd, New Orleans, LA, 70129. HAI will pay return shipping charges via normal ground service.

Outside of the continental United States: Contact an Authorized Distributor for repair/replacement instructions.

c UL us LISTED

HAI UPB™ 8-Button House Controller
Installation and Operating Instructions

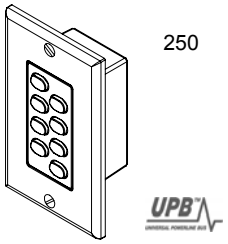

For the following Model:

38A00-2 HAI UPB™ 8-Button House Controller

READ THESE INSTRUCTIONS BEFORE INSTALLING DEVICE

This HAI UPB™ 8-Button House Controller is intended for installation in accordance with the National Electrical Code and local regulations. It is recommended that a qualified electrician perform this installation. Retain these instructions for reference.

This product is for indoor use only. Connect only copper or copper clad wire to this device.

Important Notes Prior To Installation

Be sure that all power to the load has been disconnected by turning off the circuit breaker. Installing an HAI UPB™ 8-Button House Controller with power on may expose you to dangerous voltage and may damage the device.

HAI UPB™ 8-Button House Controller Overview

The HAI UPB™ 8-Button House Controller (Figure 1) is used to turn on or off lighting in up to 8 rooms in a house where HAI UPB™ Wall Switches and HAI UPB™ 6-Button Room Controllers have been installed. It can also be used for various other lighting control applications, such as controlling 8 individual loads or lighting scenes (on/off). It uses the UPB™ two-way powerline communication technology to communicate with an HAI controller, UPB™ Wall Switches, and other UPB™ devices on the network.

The HAI UPB™ 8-Button House Controller has eight pushbuttons labeled 1, 2, 3, 4, 5, 6, 7, and 8 (although these buttons may be custom engraved). Each pushbutton is slightly backlit so that the buttons can be seen in a dark room. Depending on configuration of the HAI UPB™ 8-Button House Controller, one or more of the eight pushbuttons will be distinctly illuminated, indicating that one or more lights are on in the respective room(s). If a pushbutton is not illuminated, that means all lights in the respective room are currently off.

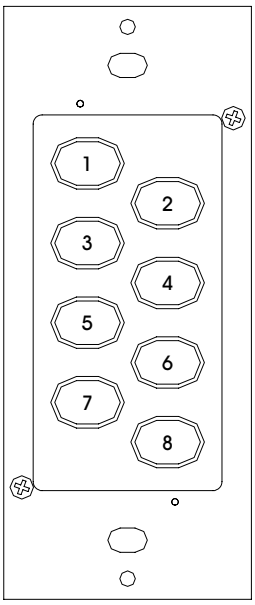

Figure 1 - HAI UPB™ 8-Button House Controller

Changing Switch Color

The color of the HAI UPB™ 8-Button House Controller may be changed to complement the interior décor. The HAI UPB™ 8-Button House Controller is supplied with a white bezel. Additional colors are available; contact your HAI distributor for more information. When changing the bezel, make sure that the HAI UPB™ 8-Button House Controller is disconnected from all power, and proceed as follows:

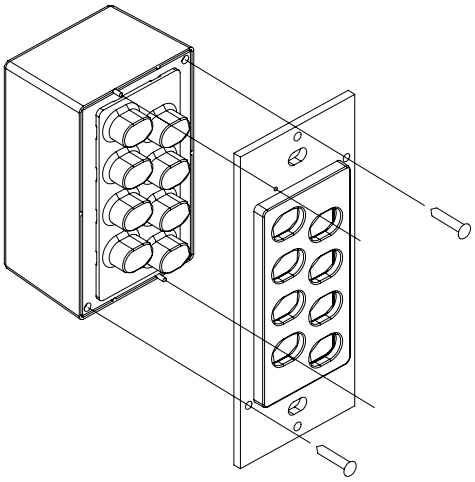

Figure 2 – Changing Switch Color

1. The bezel attaches to the HAI UPB™ 8-Button House Controller with two small Philips head screws: one on the upper-right corner and one on the lower-left corner (Figure 2).
2. Using a small-bladed Philips screwdriver, unscrew each of the two screws. Remove the bezel from the back housing.
3. Install the new bezel by aligning the mounting holes on the bezel with the installation pins on the back housing. Secure bezel to back housing with the two Phillips screws that were removed in Step 1.

INSTALLATION INSTRUCTIONS

1. Be sure that all power at the wall box has been disconnected by turning off the circuit breaker.
2. If applicable, remove the faceplate from the existing device, remove the existing device from the wall box, and disconnect the wires from the existing device. Identify the “Line” (black) and "Neutral" (white) wires.
3. Remove ¾” of insulation from each of the wires on the HAI UPB™ 8-Button House Controller. Install the HAI UPB™ 8-Button House Controller by connecting wires per wiring configuration shown in Figure 3.
4. After all connections have been made, be certain that all wire connectors are firmly attached and there is no exposed copper.
5. Gently place the wires and HAI UPB™ 8-Button House Controller into the wall box with the “1” pushbutton at the top of device. Using the supplied screws, attach the HAI UPB™ 8-Button House Controller to the wall box.
6. Before installing the faceplate, restore power to the circuit for testing.
7. After testing the HAI UPB™ 8-Button House Controller for proper local operation, install a Decora-style faceplate over the HAI UPB™ 8-Button House Controller.

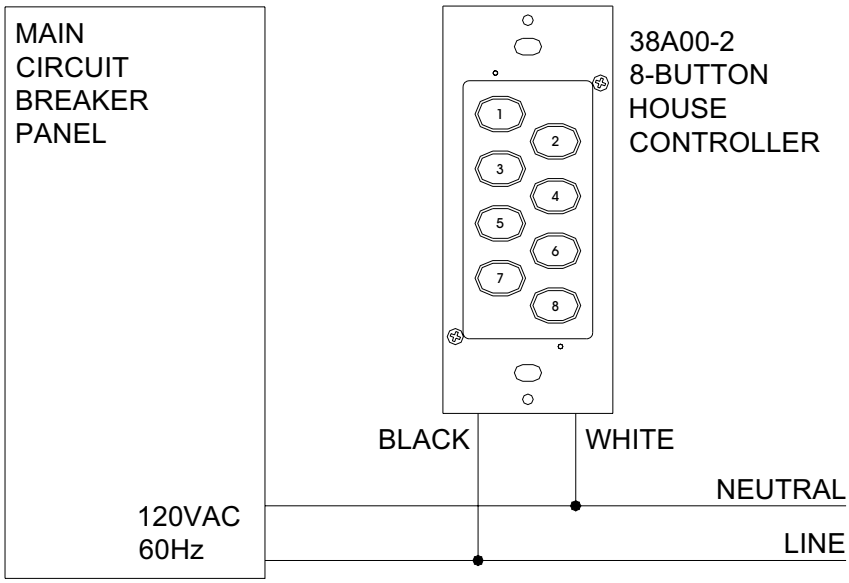

Figure 3 – Wiring Diagram

CONFIGURING THE HAI UPB™ 8-BUTTON HOUSE CONTROLLER

The HAI UPB™ 8-Button House Controller is designed to control up to 8 rooms of lighting using HAI Lighting Control (HLC) but also has several configuration options that can be enabled or modified using the UPB™ UPStart configuration software**.**

Option	**Factory Default**	**HAI Lighting Control (HLC)**
Pushbuttons 1-8	Supper Toggle / Link 013 – Link 020, respectively	Each pushbutton on the HAI UPB™ 8-Button House Controller will toggle the lighting loads in the respective room on and off.
Pushbuttons 1-8 LED Indicators	Each LED Indicator is assigned to its pushbutton’s Link ID Each LED Indicator is independent (multiple LED indicators may be on at one time).	When the room is turned on using the pushbutton, the LED indicator under the respective pushbutton is illuminated. When the room is turned off using the pushbutton, the LED indicator under the respective pushbutton is turned off. Anytime a lighting load in a room is turned on, the LED indicator under the respective pushbutton (room) is illuminated. When all loads in a room are turned off, the LED indicator under the respective pushbutton (room) is turned off.
UPB Transmission Attempts	2	No change
UPB ID	NID = 255 UID = 096	HAI controller configures Network ID (NID), Unit ID (UID), Network Password, Network Name, Room Name, Device Name, etc.
LED Brightness	High	No change.
LED Backlighting	Enabled	No change.

HAI UPB™ 8-BUTTON HOUSE CONTROLLER OPERATION

The HAI UPB™ 8-Button House Controller has many configurable items that can be set using the UPB™ UPStart configuration software. The following describes the operation of the HAI UPB™ 8-Button House Controller in its factory default configuration.

Using Pushbuttons to Control Individual Lighting Loads

In its factory default configuration, all 8 pushbuttons are configured to toggle between two different actions each time a pushbutton is pressed. Likewise the LED indicator behind the pushbutton will toggle when the pushbutton is pressed.

Linking Pushbuttons to HAI UPB™ Wall Switch Dimmer(s)

To configure these actions, the pushbuttons on the HAI UPB™ 8-Button House Controller must be linked to HAI UPB™ Wall Switch Dimmer(s) as follows:

Step	Operation
1	Use the local Decora-style rocker switch on the HAI UPB™ Wall Switch Dimmer(s) to set the desired level(s).
2	Tap the Decora-style rocker switch on the HAI UPB™ Wall Switch Dimmer(s) five (5) times quickly.
3	The HAI UPB™ Wall Switch Dimmer will flash its lighting load one time and blink its LED blue, to indicate that it is ready to be linked.
4	Press the pushbutton on the HAI UPB™ 8-Button House Controller five (5) times quickly.
5	Each HAI UPB™ Wall Switch will flash its lighting load one time to indicate that it is successfully linked to the pushbutton and that the new light level has been set.

Unlinking Pushbuttons from HAI UPB™ Wall Switch Dimmer(s)

If you accidentally link the wrong pushbutton to the wrong HAI UPB™ Wall Switch Dimmer, you can unlink them as follows:

Step	Operation
1	Tap the Decora-style rocker switch on the desired HAI UPB™ Wall Switch Dimmer(s) five (5) times quickly.
2	The HAI UPB™ Wall Switch Dimmer will flash its lighting load one time and blink its LED blue, to indicate that it is ready to be unlinked.
3	Press the pushbutton on the HAI UPB™ 8-Button House Controller ten (10) times quickly.
4	Each HAI UPB™ Wall Switch will flash its lighting load one time to indicate that it is successfully unlinked.

Toggling Lighting Loads

After the pushbuttons have been linked, when a pushbutton is pressed while its LED indicator is off, the lighting loads are set to the preset lighting levels and the LED indicator is turned on. When the pushbutton is pressed again (while its LED indicator is on), the lighting loads are turn off and the LED indicator is turned off.

Event	When LED Indicator is Off	When LED Indicator is On
Single-Tap	The HAI UPB™ Wall Switch Dimmer(s) that are linked to this pushbutton will go to their preset lighting levels. The LED indicator under the pushbutton is turned on.	The HAI UPB™ Wall Switch Dimmer(s) that are linked to this pushbutton will fade to 0% (off). The LED indicator under the pushbutton is turned off.
Double-Tap	The HAI UPB™ Wall Switch Dimmer(s) that are linked to this pushbutton will snap to 100% (on). The LED indicator under the pushbutton is turned on.	The HAI UPB™ Wall Switch Dimmer(s) that are linked to this pushbutton will snap to 0% (off). The LED indicator under the pushbutton is turned off.

Brightening and Dimming Lighting Loads

When a pushbutton is pressed and held while its LED indicator is off, the lights are brightened, until the pushbutton is released. When the pushbutton is pressed, the lights are dimmed, until the pushbutton is released.

Event	When LED Indicator is Off	When LED Indicator is On
Hold	The HAI UPB™ Wall Switch Dimmer(s) that are linked to this pushbutton will brighten. The LED indicator under the pushbutton is turned on.	The HAI UPB™ Wall Switch Dimmer(s) that are linked to this pushbutton will dim. The LED indicator under the pushbutton is turned off.
Release	The HAI UPB™ Wall Switch Dimmer(s) that are linked to this pushbutton will stop brightening.	The HAI UPB™ Wall Switch Dimmer(s) that are linked to this pushbutton will stop dimming.

SETUP MODE

To configure the HAI UPB™ 8-Button House Controller using an HAI controller or a PC running the UPB™ UPStart configuration software, it must be put into Setup Mode as follows:

Step	Operation
1	Press and hold the "1" and "8" pushbuttons simultaneously for at least 3 seconds.
2	All of the LED indicators will blink to indicate that the HAI UPB™ 8-Button House Controller is in Setup Mode.

Reset to Factory Default Settings

To reset the HAI UPB™ 8-Button House Controller to factory default settings:

Step	Operation
1	Press and hold the "1" and "8" pushbuttons simultaneously for at least 3 seconds.
2	All of the LED indicators will blink to indicate that the HAI UPB™ 8-Button House Controller is in Setup Mode.
3	Press and hold the "2" and "7" pushbuttons simultaneously for at least 3 seconds.
4	The LED indicators will stop blinking and the "1" and "8" pushbuttons will illuminate to indicate that it has been reset.

SPECIFICATIONS

Model Number	**38A00-2**
Number of Backlit Pushbuttons	8
Connections	18 GA
LED Indicators	Yes
Dimensions	4.1 x 1.7 x 1.5
Weight	0.25 lb.
Mounting	Standard J Box
Input Power	120 ± 12 VAC
Input Frequency	60 ± 3 Hz
Operating Temperature	-40 °F to 104 °F

Note: It is normal for this switch to make a slight buzzing sound during operation.

LIMITED WARRANTY

HAI warrants this product against defects in material and workmanship, under normal use and service, for a period of two (2) years from the date of purchase. During the warranty period, HAI will repair or replace, at its sole option, if this product fails due to defect. This warranty does not cover the cost of removal or reinstallation of any product. **This warranty does not cover failure caused by normal wear, damage to the product while in your possession (other than damage caused by defect or malfunction), or by its improper installation, including failure to follow the written installation and operation instructions, alterations, misuse, or abuse.** The remedies provided for in this warranty are the sole and exclusive remedies thereof. In no event shall HAI be liable for incidental expenses or consequential loss or damages. For the complete HAI Warranty for USA policy, see the HAI web site at www.homeauto.com.

Any implied warranties, including warranties of merchantability and fitness for particular use or purpose are limited to a period of two (2) years from purchase date. This warranty gives you specific legal rights, and you may have other legal rights, which vary from state to state. Some limitations may not apply to you.

For warranty and repair service within the continental United States, send defective unit carefully packaged, postage prepaid, along with description of trouble, name, return address, and phone number to: HAI, Repair Department, 4330 Michoud Blvd, New Orleans, LA, 70129. HAI will pay return shipping charges via normal ground service.

Outside of the continental United States: Contact an Authorized Distributor for repair/replacement instructions.

c UL US LISTED

HAI UPB™ Powerline Phase Coupler
Installation and Operating Instructions

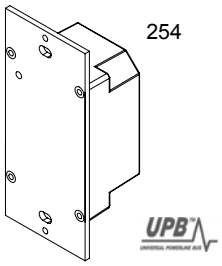

For the following Model:

39A00-1 HAI UPB™ Powerline Phase Coupler

READ THESE INSTRUCTIONS BEFORE INSTALLING DEVICE

Important Notes Prior To Installation

1. This HAI UPB™ Powerline Phase Coupler is intended for installation in accordance with the National Electrical Code and all other local codes and regulations.
2. Installation must only be preformed by a qualified electrician.
3. This product is for indoor use only.
4. Be sure that all power has been disconnected by turning off the main breaker panel.
5. Connect only copper or copper clad wire to this device.
6. Retain these instructions for reference.

HAI UPB™ Powerline Phase Coupler

The HAI UPB™ Powerline Phase Coupler is used to couple the UPB™ powerline signal from one phase to another (i.e. Line 1 to Line 2) to ensure adequate signal strength in larger homes. Although the UPB™ protocol is extremely robust and less susceptible to powerline conditions, HAI recommends the use of a UPB™ Powerline Phase Coupler in every installation.

INSTALLATION INSTRUCTIONS

1. Turn off the power at the main breaker panel.
2. Remove ¾" of insulation from each of the black wires on the HAI UPB™ Powerline Phase Coupler.
3. Install a 15A circuit breaker in the breaker panel on Line 1 (phase 1) and connect it to one of the black wires on the HAI UPB™ Powerline Phase Coupler using copper wire rated at a minimum of 15A. Secure connection with supplied wire connectors.
4. Install a 15A circuit breaker in the breaker panel on Line 2 (phase 2) and connect it to the other black wire on the HAI UPB™ Powerline Phase Coupler using copper wire rated at a minimum of 15A. Secure connection with supplied wire connectors.
5. After all connections have been made, be certain that all wire connectors are firmly attached and there is no exposed copper.
6. Install HAI UPB™ Powerline Phase Coupler into a standard single-gang electrical wall box with the LED at the top, and screw in place.
7. Before installing the faceplate, restore power to the main breaker panel.
8. After verifying that the red power LED is illuminated, install a blank faceplate onto the wall box.

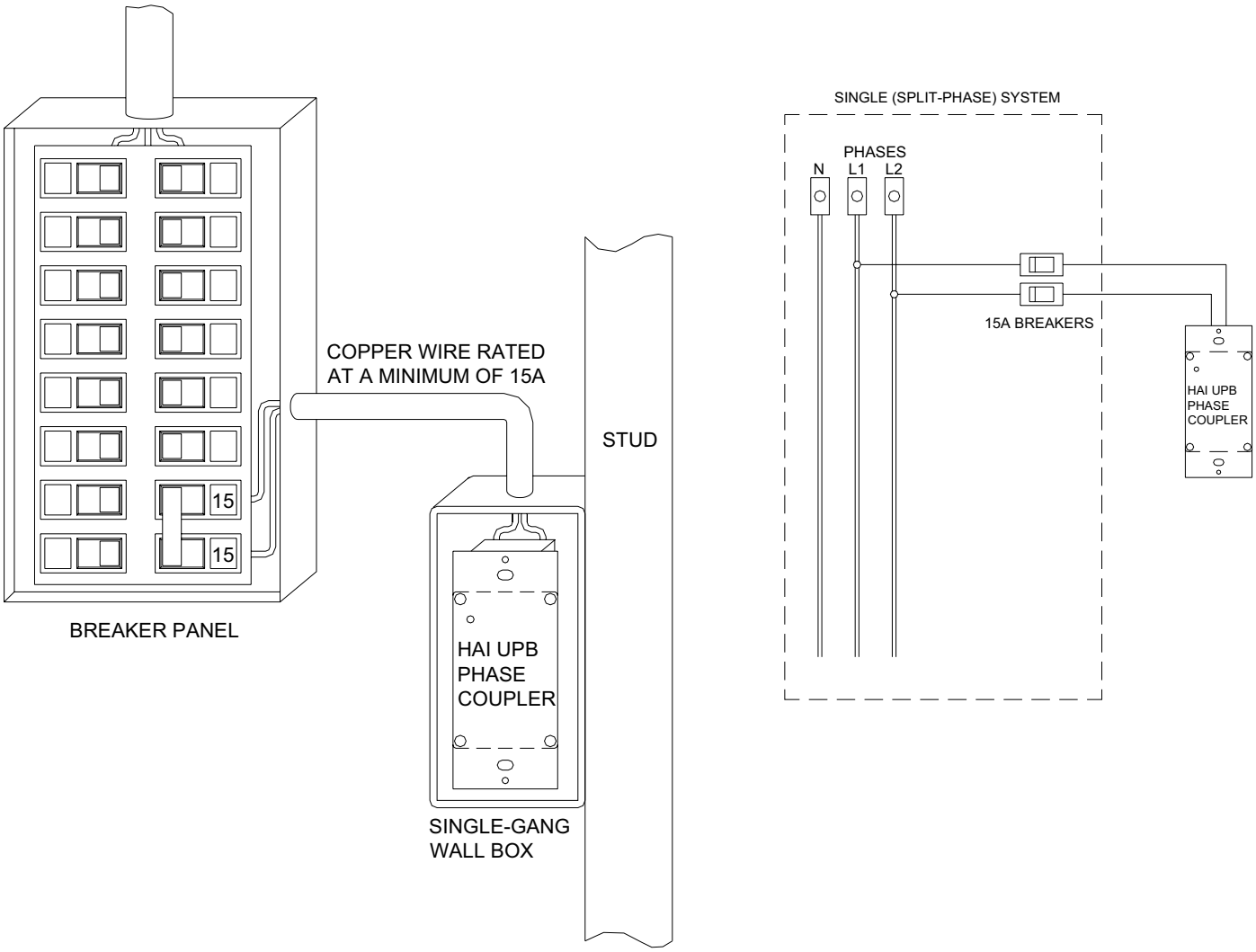

HAI UPB™ POWERLINE PHASE COUPLER WIRING DIAGRAMS

LIMITED WARRANTY

HAI warrants this product against defects in material and workmanship, under normal use and service, for a period of two (2) years from the date of purchase. During the warranty period, HAI will repair or replace, at its sole option, if this product fails due to defect. This warranty does not cover the cost of removal or reinstallation of any product. **This warranty does not cover failure caused by normal wear, damage to the product while in your possession (other than damage caused by defect or malfunction), or by its improper installation, including failure to follow the written installation and operation instructions, alterations, misuse, or abuse.** The remedies provided for in this warranty are the sole and exclusive remedies thereof. In no event shall HAI be liable for incidental expenses or consequential loss or damages. For the complete HAI Warranty for USA policy, see the HAI web site at www.homeauto.com.

Any implied warranties, including warranties of merchantability and fitness for particular use or purpose are limited to a period of two (2) years from purchase date. This warranty gives you specific legal rights, and you may have other legal rights, which vary from state to state. Some limitations may not apply to you.

For warranty and repair service within the continental United States, send defective unit carefully packaged, postage prepaid, along with description of trouble, name, return address, and phone number to: HAI, Repair Department, 4330 Michoud Blvd, New Orleans, LA, 70129. HAI will pay return shipping charges via normal ground service.

Outside of the continental United States: Contact an Authorized Distributor for repair/replacement instructions.

c UL US LISTED

HAI UPB™ 15A Relay Switch and Auxiliary Switch Installation and Operating Instructions

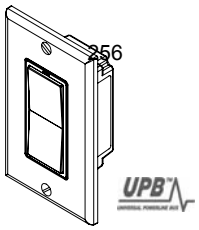

For the following Models:

40A00-1 HAI 15A Relay Switch (referred to as HAI UPB™ Wall Switch, in this document), and
37A00-1 HAI Auxiliary Switch

READ THESE INSTRUCTIONS BEFORE INSTALLING DEVICE

This HAI UPB™ Wall Switch and Auxiliary Switch is intended for installation in accordance with the National Electrical Code and local codes and regulations. It is recommended that a qualified electrician perform this installation. Retain these instructions for reference.

This product is for indoor use only. Connect only copper or copper clad wire to this device.

Important Notes Prior To Installation

1. All HAI UPB™ Wall Switches require a neutral (white) connection wire.

2. Be sure that all power to the load has been disconnected by turning off the circuit breaker. Installing an HAI UPB™ Wall Switch or Auxiliary Switch with power on may expose you to dangerous voltage and may damage the device.

HAI UPB™ Wall Switch Overview

The HAI UPB™ Wall Switch (Figure 1) allows for local control of loads by using the Decora-style rocker switch. It also incorporates the UPB™ two-way powerline communication technology that gives it the ability to be remotely controlled by UPB™ compatible controllers. The HAI UPB™ Wall Switch is also capable of transmitting UPB™ messages when the rocker switch is turned on or turned off.

The HAI 15A Relay Switch is used to control loads such as receptacles, motor-operated appliances (i.e. fans), and fluorescent lighting fixtures.

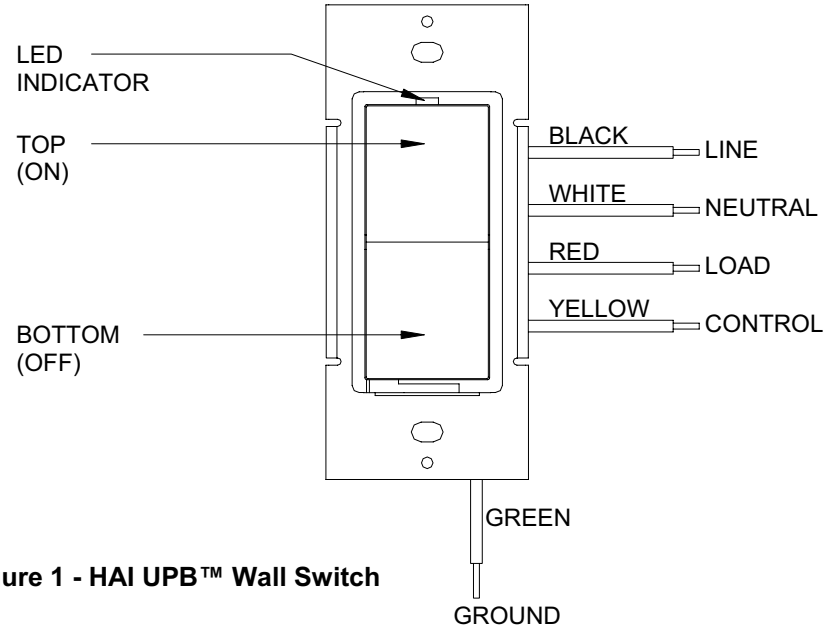

Figure 1 - HAI UPB™ Wall Switch

SPECIFICATIONS

Model Number	**40A00-1**
Incandescent Loads, Inductive Loads, and Florescent Loads	Yes
Motor-Operated Appliances	Yes
Current Maximum	15A
Connections	18 GA
LED Indicator	Yes
Dimensions	4.1 x 1.75 x 1.45
Weight	0.25 lb.
Mounting	Standard J Box
Input Power	120 ± 12 VAC
Input Frequency	60 ± 3 Hz
Operating Temperature	-40 °F to 104 °F

Note: It is normal for this switch to make a slight buzzing sound during operation. It is also normal for the switch and wall plate to feel warm to the touch.

LIMITED WARRANTY

HAI warrants this product against defects in material and workmanship, under normal use and service, for a period of two (2) years from the date of purchase. During the warranty period, HAI will repair or replace, at its sole option, if this product fails due to defect. This warranty does not cover the cost of removal or reinstallation of any product. **This warranty does not cover failure caused by normal wear, damage to the product while in your possession (other than damage caused by defect or malfunction), or by its improper installation, including failure to follow the written installation and operation instructions, alterations, misuse, or abuse.** The remedies provided for in this warranty are the sole and exclusive remedies thereof. In no event shall HAI be liable for incidental expenses or consequential loss or damages. For the complete HAI Warranty for USA policy, see the HAI web site at www.homeauto.com.

Any implied warranties, including warranties of merchantability and fitness for particular use or purpose are limited to a period of two (2) years from purchase date. This warranty gives you specific legal rights, and you may have other legal rights, which vary from state to state. Some limitations may not apply to you.

For warranty and repair service within the continental United States, send defective unit carefully packaged, postage prepaid, along with description of trouble, name, return address, and phone number to: HAI, Repair Department, 4330 Michoud Blvd, New Orleans, LA, 70129. HAI will pay return shipping charges via normal ground service.

Outside of the continental United States: Contact an Authorized Distributor for repair/replacement instructions.

c UL US LISTED

Model 62A05-1 Hi-Fi Remote Control

DESCRIPTION

The Model 62A05-1 Hi-Fi Remote Control is used for sending IR signal to a Volume-Source Control (VSC), which in turn, sends the signal to the Hi-Fi processor. Upon receiving the IR data, the Hi-Fi processor can toggle mute, increment volume, decrement volume, change source (one IR command for each of the six sources), and toggle power for the current zone.

USING THE REMOTE CONTROL

To use the Hi-Fi Remote Control, point it at the VSC in the desired zone and press appropriate button(s) as follows:

1) **Power:** This button turns the zone on and off.

2) **Mute:** This button turns mute on and off.

3) **Source:** These buttons select the audio source to be heard in the zone.

4) **Volume Down:** This button decreases the volume in the zone.

5) **Volume Up:** This button increases the volume in the zone.

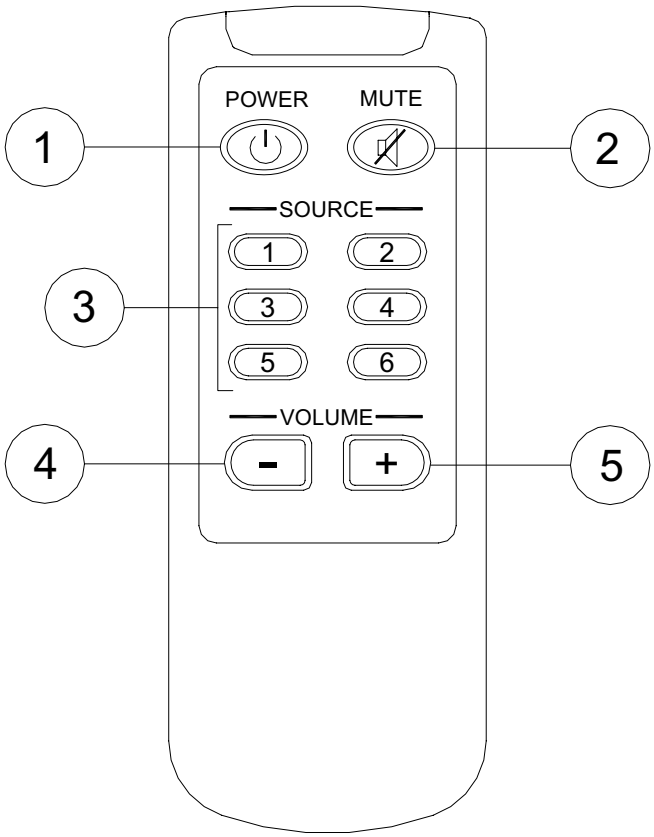

Model 62A07-1 Hi-Fi Power Supply

DESCRIPTION

The Model 62A07-1 Hi-Fi Power Supply is used to power the Hi-Fi processor and 4 Zone Amplifier Cards. One Power Supply is needed to power Zones 1-4 and a second Power Supply is needed to power Zones 5-8.

INSTALLATION

1) Insert the connector for the Power Supply into the Power jack marked "PJ1" (jack to the left) under the section labeled "Power Zones 1-4" on the Hi-Fi Main Assembly.

2) Plug the power cord from the Power Supply into a 120 VAC outlet. The "POWER ON" LED will illuminate. The Hi-Fi system will start. Follow the instructions in the User's Guide for operation.

If applicable, insert the connector for the Power Supply into the Power jack marked "PJ2" (jack to the right) under the section labeled "Power Zones 5-8" on the Hi-Fi Main Assembly. Plug the power cord from the Power Supply into a 120 VAC outlet. The "POWER ON" LED will illuminate.

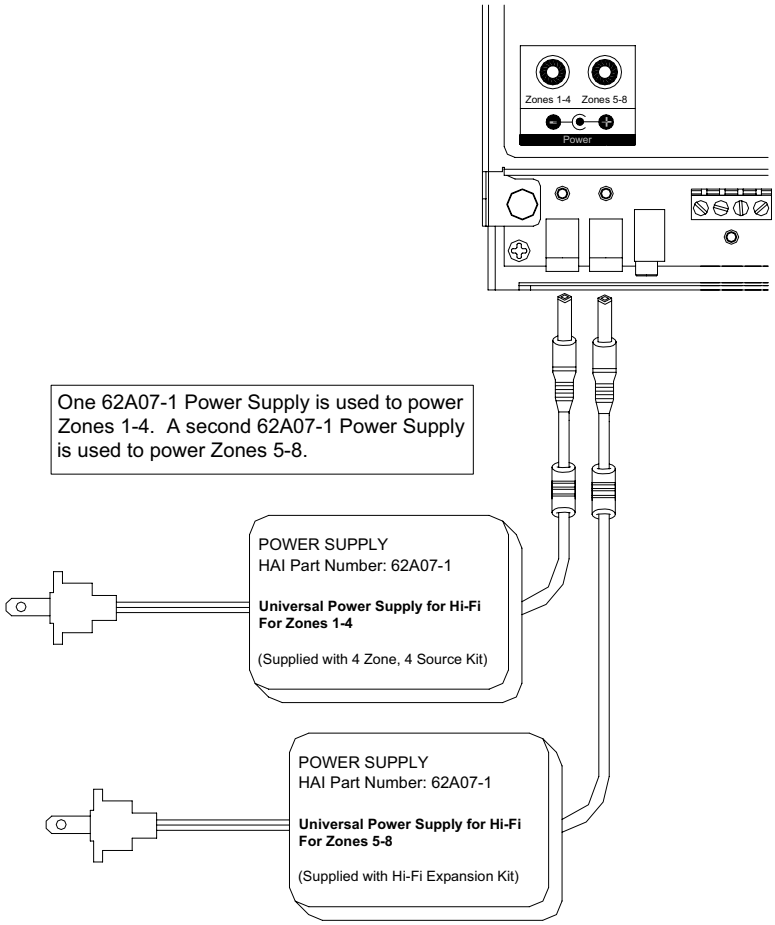

SPECIFICATIONS

Power Supply Input (each):	100-240VAC, 50/60Hz, 120W
Power Supply Output (each):	30VDC, 3 Amps

Model 62A08-1 Hi-Fi IR Flasher

DESCRIPTION

The IR flasher is used for sending IR data to the source equipment. When you point your source equipment remote control at the IR receiver in the Volume-Source Control (VSC) and send a signal, the IR data is routed to the appropriate Remote Input Module (RIM), to which the source is connected, which then sends the IR signal through the IR flasher to the source equipment.

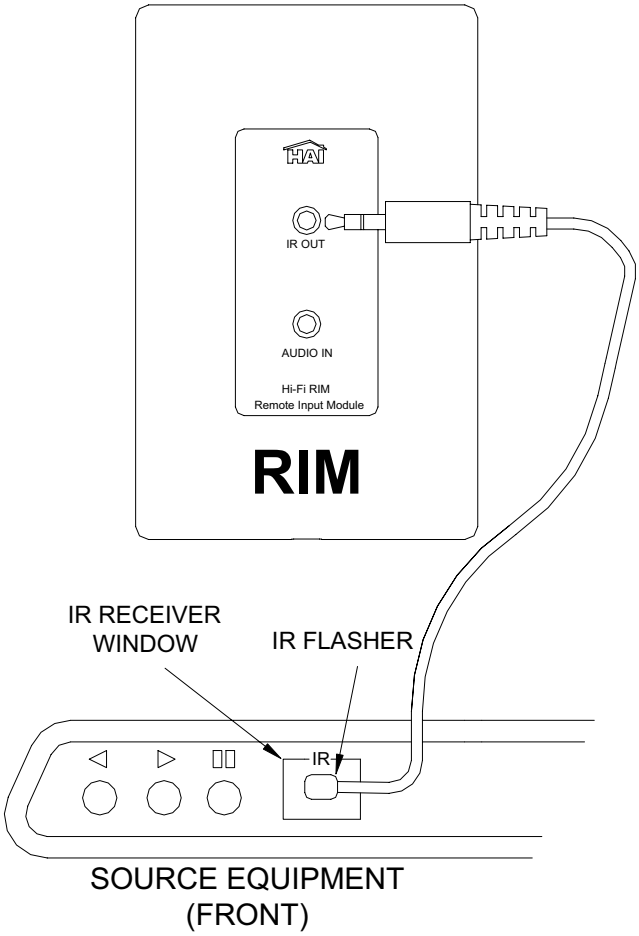

SPECIFICATIONS

Emitter Output Drive Current:	100mA
Emitter Output Drive Voltage:	5V

261

Lumina Pro / OmniPro II Expansion Enclosure **HAI Part Number: 17A00-1**

The Model 17A00-1 Expansion Enclosure adds sixteen voltage outputs for control and sixteen inputs for additional security/fire zones, auxiliary or temperature inputs.

The 17A00-1 can be mounted up to 1000 feet from the main controller and has its own power supply and battery. It reduces wiring use in larger installations.

It is commonly used for sprinkler systems, control of pumps, motors, remote control circuit breakers, and additional security/fire zones.

Up to four Expansion Enclosures can be used in conjunction with the HAI Lumina Pro, OmniPro, or OmniPro II home control system. Optional Model 19A00-1 8-Relay Module and Model 10A07-1 4-Relay Module mount in the enclosure.

It comes with a lock set with two keys.

262

12V 5 AH Battery **HAI Part Number: 44A02-1**

Replacement Battery for Lumina and Lumina Pro home control systems.

24V 40 VA Transformer **HAI Part Number: 44A03-1**

Replacement Transformer for Lumina and Lumina Pro home control systems.

Touchscreen Hub Replacement Power Supply **HAI Part Number: 106080**

Replacement Power Supply for a Touchscreen Hub.

Chip Upgrades **HAI Part Numbers: Various**

EPROM chip upgrade with installation instructions as follows:

- Lumina Pro Upgrade Chip
  (HAI Part Number 20A04-21UPG)
- Lumina Upgrade Chip
  (HAI Part Number 20A04-22UPG)
- OmniPro II Upgrade Chip
  (HAI Part Number 20A04-2UPG)
- Omni II Upgrade Chip
  (HAI Part Number 20A04-1UPG)

263

- Omni IIe Upgrade Chip
  (HAI Part Number 20A04-50UPG)
- Omni LT Upgrade Chip
  (HAI Part Number 21A03-1UPG)

Enclosure Lock & 2 Keys **HAI Part Number: 21A06-1**

Lock and two keys for an HAI enclosure.

Shipping and Module Loads

Module 1

Weights	lb/ft^2	Weight (lb)
SIP's	4	1664
D/W	2	832
Siding	2.5	1040
Window	4	160
Island		250
Subfloor	7	665
Tile	6	570
Wood Floor	4.5	898
Appliances		500
Bath Fixtures		100
Cabinets		750
Mechanical		750
Mech Door		200
Bath Door		100
Int. Walls	7	1288
Fake Wall	3	504
	Total	10271
	120%	12325

W9	lb/ft^2	Weight (lb)
SIP's	4	107
D/W	2	53
Siding	2.5	67
Window*	4	0
	Subtotal	227
	120%	272

W11&13	lb/ft^2	Weight (lb)
SIPS	4	827
D/W	2	414
Siding	2.5	517
Window*	4	48
	Subtotal	1806
	120%	2167

W15	lb/ft^2	Weight (lb)
SIP's	4	107
D/W	2	107
Siding	2.5	133
Window*	4	48
	Subtotal	395
	120%	474

Int. Walls	5	237.5
	Subtotal	238
	120%	285

	Total	3197

Module 2

Weights	lb/ft^2	Weight (lb)
SIP's	4	1757
SIP's (Int.)	4	544
D/W (Ext.& SIP-Int.)	2	1151
Siding	2.5	1098
Curtain Wall (Front)	3	312
Curtain Wall (Back)	3	156
Window	4	264
Subfloor	7	3136
Laminate	4.5	2016
Ceiling	4.5	330.75
D/W (Int.)	7	980
Fake Wall	2	512
	Total	12258
	120%	14709

W7	lb/ft^2	Weight (lb)
SIP's	4	75
Siding	2.5	47
	Subtotal	121
	120%	146

W5	lb/ft^2	Weight (lb)
SIP's	4	35
Siding	2.5	22
Window*	4	48
	Subtotal	105
	120%	126

W2	lb/ft^2	Weight (lb)
SIP's	4	65
D/W	2	33
Siding	2.5	41
Window*	4	96
	Subtotal	234
	120%	281

W2B	lb/ft^2	Weight (lb)
SIP's	4	65
D/W	2	33
Siding	2.5	41
	Subtotal	138
	120%	166

	Total	718

Roof

Roof	Length (ft)	Width (ft)	Area (ft^2)	lb/ft^2	Weight (lb)	120%
R1-R4	32	11	352	5	1760	2112

Module 2

Roof	Length (ft)	Width (ft)	Area (ft^2)	lb/ft^2	Weight (lb)	120%
R5-R7&R9	33	11	363	5	1815	2178
R8	5	11	27 1/2	5	137 1/2	165
					TOTAL	2343

Totals

Module 1

Module	Wall Section	Roof
12325	3197	2112
	TOTAL	**17634**

Module 2

Module	Wall Section	Roof
14709	718	2343
	TOTAL	**17770**

Home/Office Fire Extinguisher

Part number 466143 | **Multipurpose use** | **Rechargeable**

UL Rated 3-A, 40-B:C

For use on the following types of fire:

Description

Suitable for use on Class A (trash, wood & paper), Class B (liquids & gases) and Class C fires (energized electrical equipment).

The Home/Office unit is fitted with a pressure gauge that provides at-a-glance status, is manufactured from lightweight aluminum and a tough nylon valve assembly.

At a Glance

- Model Home/Office
- Multipurpose Dry Chemical
- UL listed
- UL rated 3-A, 40-B:C
- Supplied with wall hanger
- Monoammonium Phosphate
- 6 year limited warranty
- Suitable for use on most common fires

Features

- Easy-to-read gauge tells you fire extinguisher is charged and ready for use
- Clear instruction label using graphics to show steps required to operate extinguisher
- Easy-to-pull safety pin
- Rust and impact resistant nylon handle
- 5 lb of fire extinguishing agent (Average)
- 6 year limited warranty
- UL approved wall hanger
- Coast Guard (U.S.C.G) approved when fitted with mounting bracket (not supplied)
- Powder coated cylinder for corrosion protection

UPC: 0-47871-66143-5

Product Specification

Net agent weight (Average)	5.0 lb
Unit weight (Average)	7.75 lb
Diameter	4.5 inches
Height	16.07 inches
Discharge time	13-15 seconds
Discharge range	12-18 feet
Operating pressure	195 psi
Cylinder	Seamless aluminum
Valve, handle, lever	Nylon
Strap Bracket	U.S.C.G approved

Packaging Options

Kidde Residential and Commercial Division
1394 South Third Street, Mebane, NC 27302 • Tel. 919.563.2711 www.kiddeus.com

Kidde

Walter Kidde Portable Equipment Inc.
1394 South Third Street
Mebane, NC 27302
(919) 563-5911

MATERIAL SAFETY DATA SHEET
Kidde ABC Fire Extinguisher

SECTION 1 – CHEMICAL PRODUCT AND COMPANY IDENTIFICATION	
Trade Name / Label Name:	**ABC Fire Extinguisher**
CAS Number:	N/A
Chemical Name / Family	N/A It is a mixture
Synonyms:	ABC Fire extinguishing powder Multipurpose Fire extinguishing agent
Manufacturer's Name:	Kidde – Residential & Commercial
Address:	1394 South Third Street, Mebane, NC 27302
Business phone / Fax:	919-563-5911 / 1-800-547-2111
24 Hour Emergency Contact:	Chemtrec 1-800-424-9300
Date of Preparation:	October 25, 2001
Revision Date:	February 16, 2005

SECTION 2 – COMPOSITION AND INFORMATION ON INGREDIENTS

CHEMICAL NAME	CAS N°	% w/w	OSHA PEL mg/m^3	ACGIH TLV mg/m^3	TOXICITY DATA
Monoammonium phosphate	7722-76-1	25 - 95	NONE	NONE	NONE
Ammonium sulfate	7783-20-2	0 - 70	NONE	NONE	NONE
Mica	12001-26-2	1 – 4	5	10	NONE
Attapulgus clay	8031-18-3	1 - 4	NONE	NONE	NONE
Amorphous silica	7631-86-9	0.2 – 1.5	6	10	NONE
Methyl Hydrogen Polysiloxane	68037-59-2	0.3 – 1.5	NONE	NONE	NONE

SECTION 3 – PHYSICAL AND CHEMICAL CHARACTERISTICS

Boiling point, °C:	N/A	**Specific gravity (H_20=1)**	ABOUT 1.9	**Viscosity @ 20°C:**	N/A
Vapor pressure, mm Hg:	N/A	**Percent volatile by volume:**	N/A	**Melting point, °C:**	NDA
Vapor density (Air=1):	N/A	**Evaporation rate (Butyl acetate=1)**	N/A	**Solubility in water:**	22.7 g/100g

Reactivity in water:	Unreactive	**Appearance and odor:**	Odorless, pale colored fine powder (variable color)

SECTION 4 – FIRE AND EXPLOSION HAZARD DATA

Flash point:	N/A	**Flammable limits in air, % by volume**	N/A	**Auto-ignition temperature:**	N/A
Extinguishing media:	N/A – The product is a fire extinguishing agent				
Unusual fire and explosion hazards:	NONE				
Special fire fighting procedures:	The material is a fire extinguishing agent and will not burn. However, if other materials are involved, use standard chemical fire fighting procedures and consider the hazards of those materials. In enclosed areas, fire fighters must wear self-contained breathing apparatus and full protective equipment.				

SECTION 5 – REACTIVITY DATA

Stability:	Stable	**Conditions to avoid:**	Extreme heat	**Hazardous polymerization:**	Will not occur
Incompatibility (materials to avoid):	Strong alkalis. Do not mix with BC type dry chemical extinguishing agents.				
Hazardous decomposition products:	Ammonia, phosphorus oxides.				

SECTION 6 – HEALTH HAZARD DATA

Threshold limit value:	ACGIH TLV for particulates not otherwise classified: 10 mg/m^3 OSHA PEL for nuisance dust limit total: 15 mg/m^3
Routes of entry:	**Inhalation:** YES; may be irritant to the respiratory tract. **Eye contact:** YES; mildly irritant for a short period. **Skin contact:** YES; may be mildly irritating. **Ingestion:** NOT an expected route of entry.
Signs and symptoms of overexposure:	**Acute:** Transient cough, shortness of breath, irritation of airways. **Chronic:** This product is not known to cause chronic illness.
Medical conditions generally aggravated by exposure:	Asthma, emphysema, bronchitis or other respiratory illness.
Chemical listed as carcinogen or potential:	NTP program: No IARC monographs: No OSHA: No
Emergency and first aid procedures:	**Eye contact:** Flush with large amounts of water for at least 15 minutes. If irritation persists, seek medical attention. **Skin contact:** Wash with soap and water. If irritation persists, seek medical attention. **Inhalation:** Move victim to fresh air. Seek medical attention if discomfort continues. **Ingestion:** Rinse mouth, drink large amounts of water and induce vomiting. Seek medical help.

SECTION 7 – SPECIAL PRECAUTIONS AND SPILL / LEAK PROCEDURES

Precautions to be taken in handling and storage:	Should be stored in original containers. Store in dry, cool, well-ventilated place away from alkaline compounds. Wash after handling. Do not cut, grind, weld or drill on or near product containers. Treat empty containers as if they were full.
Other precautions:	Do not mix with alkaline materials.
Steps to be taken in case materials is released or spilled:	Sweep up or vacuum. Store in covered containers. Do not reuse. In case of large spills, use rubber gloves, chemically resistant suit and boots, hard hat and air purifying respirator.
Waste disposal method:	Dispose of in compliance with local, state and federal regulations. Components are non hazardous, sanitary landfill disposal may be acceptable

SECTION 8 – SPECIAL PROTECTION INFORMATION

Respiratory protection:	Dust mask where dustiness is prevalent or TLV exceeded. Mechanical filter respirator if exposure is prolonged.
Ventilation:	Use adequate ventilation. Use fan or vent to outside.
Protective gloves:	Wear rubber gloves for routine industrial use.
Eye protection:	Recommended as mechanical barrier for prolonged exposure. Safety glasses or chemical type goggles.
Other protective equipment:	If irritation occurs, long sleeves and impervious gloves should be worn.
Work / Hygienic practices:	Use good personal hygiene and good housekeeping practices. Avoid breathing of dust. Wash with soap and water.

SECTION 9 – REGULATORY INFORMATION

HAZARDOUS MATERIAL IDENTIFICATION SYSTEM RATINGS

HEALTH: 1	**FLAMMABILITY:** 0	**REACTIVITY:** 0

HAZARD INDEX: 0 Minimal hazard; 1 Slight hazard; 2 Moderate hazard; 3 Serious hazard; 4 Severe hazard

SHIPPING INFORMATION

DOT Shipping Name:	**Fire Extinguishers**	**DOT Hazard Class:**	**2.2 (Nonflammable Compressed Gas)**
DOT ID Number:	**UN1044**	**Packing Group:**	**N/A**

GENERAL KEYS:

N/A: Not applicable.
NDA: No data available.

120V AC
Direct Wire
with Battery
Back-up

FIREX® Heat Alarm

Item 5700

5700 Features and Benefits

Heat alarms are sensitive only to a fixed temperature — *Less nuisance alarms due to contamination, dust and insects*

Installation design and features similar to other Firex® Smoke Alarms — *Contractor familiarity with installation*

Interconnects with other Firex Smoke Alarms, CO Alarms, Smoke/CO Alarms, and Heat Alarms — *Compatible with contractor preferred Firex products*

Large, easy to use push-to-test button — *Quickly locate and access test button to test all alarm functions once installation is complete*

LED — *Green "power-on" LED confirms constant AC power and red LED displays alarm/battery status*

Incorporates Firex installer-focused innovations — *Fastest and easiest installation available*

9 Volt battery back-up (included) — *Provides extra protection during power outages*

Attractive, low-profile design — *Our contemporary StyleLine design™ is a favorite among consumers*

Description

The Firex® 5700 Heat Alarm offers contractors the same reliability and quality they have long depended on from the leader in fire safety technology. The Firex Heat Alarm, Model 5700, is a fixed temperature unit that detects heat at 135°F (57°C) or greater. It relies on a thermistor that is sensitive only to temperature. When the temperature reaches 135°F (57°C) or greater, the alarm is triggered. The 5700 requires 120V AC power and includes a 9V battery back-up for added protection in the event of a power failure. The 5700 heat alarm is interconnectable with other AC/DC Firex heat alarms, smoke alarms, smoke/co combo alarms, and carbon monoxide alarms. Up to 11 other smoke alarms and smoke/co combo alarms can be interconnected, and 6 Firex heat alarms and carbon monoxide alarms for a total of not more than 18 devices. Contractors have been installing the best selling Firex smoke alarms for over 20 years and will appreciate the design similarities when installing Firex heat alarms. Both products utilize a Quick Connect wire harness, an optional tamper-resist feature and a unique power connector that prevents interconnection with incompatible heat alarms, smoke alarms or security systems.

Why Install a Firex Heat Alarm?

Some environments can trigger nuisance alarms in conventional smoke alarms due to shifts in temperature and humidity as well as dust, fumes and insects. Heat alarms are intended for use in the locations listed below because they are virtually unaffected by these adverse conditions:

- Kitchens
- Garages
- Unfinished Attics
- Boiler Rooms
- Basements
- Other areas where high levels of dust and fumes are present

Heat alarms should always be interconnected with smoke alarms to provide early warning when fire is present.

5 Year Limited Warranty

Item 5700

120V AC
Direct Wire
with Battery
Back-up

FIREX® Heat Alarm

Side View

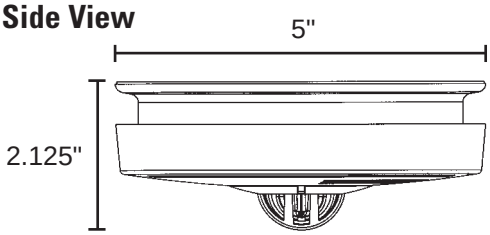

Mounting Bracket

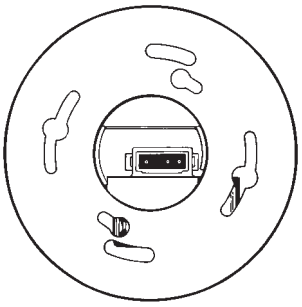

Architectural Specifications

The heat alarm shall be a StyleLine design™ (2-1/8" high, 5" diameter), powered by 120V AC, 60Hz source with a 9-volt battery back-up. The alarm shall have a fixed temperature sensor set to alarm at nominal 135°F (57°C). The alarm shall be rated at no greater than .05W in standby. Operating temperature range shall be between -10°F and 158°F; 10%-93% relative humidity; 100% solid state circuits over an input range of 100-130V AC. A green continuous power on indicator shall be a built-in light emitting diode (LED) in the standby condition; a second red blinking LED shall indicate that a sufficient 9-volt battery back-up is present; when activated; the initiating alarm red LED shall flash while the interconnected alarms remain extinguished. The test switch shall activate the alarm function by electronically simulating a temperature greater than 135°. The alarm shall mount to a single gang box, 4" octagon junction box, or a square to round drywall ring without screw removal. It shall have a Quick Connect molded harness, pigtail wiring and separate mounting bracket. It shall meet the requirements of U.L. Standard 539 and 217.

Technical Specifications

Item	5700
Model	ADH
Product Weight	8.6 ounces
Operating Temperature	-10°F to 158°F (-23°C to 70°C)
Interconnect Qty	Up to 18 Firex devices maximum: 12 smoke alarm items 5000, 4618 and 46182 (model FADC), 4518 (model ADC) and 4480 (model PAD). Up to 6 heat, carbon monoxide or smoke and carbon monoxide combination alarms maximum; Firex carbon monoxide alarm item 6045 (model COQ8), Firex smoke and carbon monoxide combination alarm item 7000 (model FADCQ) or Firex heat alarm item 5700 (model ADH).
Electrical Rating	120V AC, 60HZ, 50mA max, 9 Volt Battery Back-up
Alarm Point	135°F (57°C) fixed temperature triggers alarm
Horn Output	85 decibels at 10 feet
Listing	U.L. 539 and 217
U.L. Recommended Coverage	2500 square feet
U.L. Recommended Spacing	50 feet
Maximum Distance from Wall	25 feet

Installation of Heat Alarm

This heat alarm should be installed in accordance with the NFPA's Standard 72 (National Fire Protection Association, Batterymarch Park, Quincy, MA 02269) and any local codes that apply.

Use #18 AWG minimum solid or stranded wire. When interconnecting, maximum wire length between any two is 1,500 feet for #18 AWG or 4,000 feet for #14 AWG (20 OHMS loop resistance).

DO NOT connect to any other type or model of heat or smoke alarm. Connect heat alarms to a single AC branch circuit. If local codes do not permit, be sure the neutral wire is common to both phases.

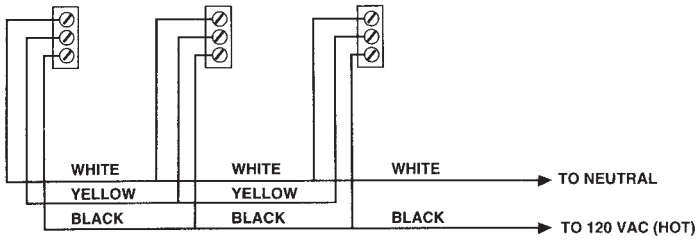

Shipping Specifications

Individual Carton Dimensions	5-1/4" x 2-11/16" x 5-1/4"
Master Carton Quantity	10
Master Carton Dimensions	15-3/4" x 11-1/4" x 6"
Master Carton Weight	7.62 lbs.

invensys™

Climate Controls Americas
191 E. North Avenue
Carol Stream Illinois 60188 USA
Cust. Service Telephone +1 800 951 5526
Cust. Service Facsimile +1 630 260 7299

3505 Laird Road Unit #14
Mississauga Ontario L5L 5Y7 Canada
Cust. Service Telephone +1 800 668 6958
Cust. Service Facsimile +1 905 828 1265

For Technical Service
Telephone +1 800 445 8299
Facsimile +1 630 260 7299
mctechservices@invensys.com

Visit us on the web at
www.icca.invensys.com

120V AC
Direct Wire With
Battery Back-up and
Quick Quiet™
False Alarm Control™

FIREX® Smoke Alarm

Item 4618

Features and Benefits

NEW Alarm Locator
Red LED flashes until reset for quick, clear identification of the initiating alarm in an interconnected system.

Front loading battery door
Makes battery changing simple.

PowerLink™ Tab
Makes installation faster and easier than ever.

Quick Quiet™ False Alarm Control™
Quiets unwanted alarms for up to 15 minutes.

NEW Visible Low Battery Indicator
Helps locate chirping unit.

Interconnects with other Firex smoke and heat alarms
Compatible with other contractor preferred Firex devices.

NEW Ramp-Up Test Horn
Allows you to test the unit without the ear-piercing horn.

Factory sealed housing
Prevents tampering and provides outstanding durability.

Dust Cover
Eliminates nuisance call-backs.

Attractive low-profile design
Favorite among consumers.

PowerLink Tab™ makes installation faster and easier than ever. Simply pull tab, close door and press test button!

Description

The Firex 4618 Smoke Alarm is an ionization 120V AC smoke alarm with battery back-up for single or multiple station use. It includes a Quick Quiet™ False Alarm Control™ feature which allows the user to quiet an unwanted alarm for up to 15 minutes. The 4618 has a front loading battery door, 85 decibel horn, test switch and dual purpose LED indicator; constant green "power on" confirms AC power is present and the flashing red displays alarm/battery status. The Latching LED feature clearly identifies the smoke alarm that initiated an alarm in an interconnected system with a flashing red LED. The LED will remain flashing until the test button is depressed on that unit. Our unique PowerLink™ Tab is designed to allow the smoke alarm to be shipped with the battery already installed. It keeps the door from closing until installation, which prevents the battery from draining prematurely. The installer simply removes the PowerLink™ Tab, closes the door and tests the unit. This results in a faster installation time. The dust cover eliminates nuisance call-backs by keeping construction dust and debris from causing false alarms.

This smoke alarm mounts to any single or 4" octagon junction box or square-to-round drywall ring and has 8" long pigtails with a Quick Connect harness for permanent connection. The 4618 is interconnectable with up to 11 other compatible Firex smoke alarms and 6 Firex heat, carbon monoxide or smoke/CO combo alarms for a total of not more than 18 Firex devices. When interconnected with other Firex smoke alarms, the unit that initiates an alarm will display a rapidly flashing red LED while the other interconnected alarm LED's remain extinguished. This Firex unit should be placed in single-family households or in each individual living unit of multiple-family buildings.

An ISO 9002 Certified Company

UL

5 Year Limited Warranty

Item 4618

120V AC
Direct Wire With
Battery Back-up and
Quick Quiet™
False Alarm Control™

FIREX® Smoke Alarm

Mounting Bracket

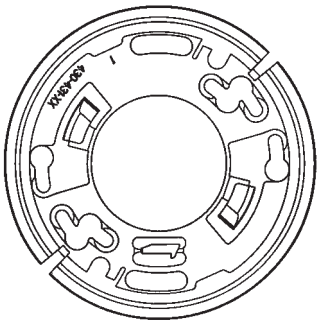

Side View

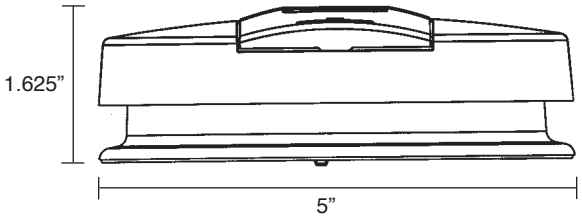

Technical Specifications

Item	4618
Model	FADC
Product Weight	8 ounces
Operating Temperature	40° to 100°F
Interconnect Qty	Up to 18 Firex devices maximum: smoke alarm items 5000 (model FADC), 4418 (model AD), 4518 (model ADC), 4480 (model PAD), Firex heat alarm item 5700 (model ADH), CO alarm items 10000 (COE), 6045 (model COQ8), smoke & CO alarm item 7000 (model FADCQ) (up to 6 heat, CO, smoke CO alarms max.)
Electrical Rating	120V AC, 60HZ, 50mA max, 9 Volt Battery Back-up
Alarm Point	obs. 1.35 ± 0.7%/ft.
Horn Output	85 decibels at 10 feet
Listing	4618 — U.L. 217
Detection Type	Dual ionization chamber
Humidity Range	10% to 93% relative humidity

Architectural Specifications

The smoke alarm shall be a Styleline design™ (1-5/8” high, 5” wide), powered by a 120 VAC, 60 Hz source with a 9 volt battery back-up. The alarm shall have a “quick connect” molded harness and front loading battery door. The alarm shall have a dual chamber ionization sensor. The alarm shall be rated at no greater than .5W in standby. Nominal sensitivity shall be measured by U.L. at obs. 1.35 ± 0.7%/ft. Temperature operating range shall be between 40° and 100°F (4°-38°C); humidity range between 10%-93% relative humidity; 100% solid state alarm circuits over an input range of 100-130 VAC. A green continuous power-on indicator shall be a built-in light emitting diode in the standby condition; a second red flashing LED shall indicate that a sufficient 9-volt battery back-up is present; when activated the initiating alarm red LED shall remain illuminated while the interconnected alarm LEDs are extinguished. The Quick Quiet™ False Alarm Control™ feature shall desensitize the alarm for 15 minutes. The red LED shall blink once every 10 seconds when in Quick Quiet™ False Alarm Control™ and the alarm shall produce two short chirps 2 seconds apart at the conclusion of the desensitized period. The test switch shall electronically activate the chamber to simulate smoke and check for proper operation. The electronic horn shall have a level of 85 decibels at 10 feet. The alarm shall mount to a single gang box, 4” octagon junction box, or a square to round drywall ring without screw removal. It shall have a pigtail wiring, separate mounting bracket. The 4618 shall meet the requirements of U.L. Standard 217.

Installation of Smoke Alarm

This smoke alarm should be installed in accordance with the NFPA’s Standard 72 (National Fire Protection Association, Batterymarch Park, Quincy, MA 02269) and any local codes that apply.

When interconnecting, use #18 AWG minimum solid or stranded wire. Maximum wire length between any two is 1,500 feet for #18 AWG or 4,000 feet for #14 AWG (20 OHMS loop resistance).

DO NOT connect to any other type or model of smoke, heat, CO or smoke/CO combo alarm. Connect smoke, heat, CO or smoke/CO combo alarms to a single AC branch circuit. If local codes do not permit, be sure the neutral wire is common to both phases.

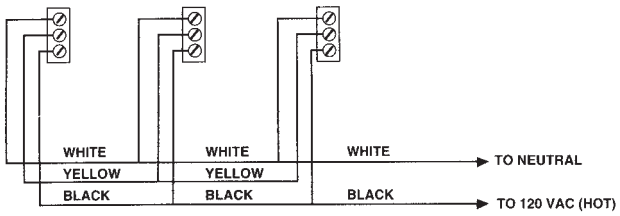

Shipping Specifications

Individual Carton Dimensions	5-1/8” x 5-1/8” x 1-1/2” 13cm x 13cm x 3.8cm
Master Carton Quantity	24
Master Carton Dimensions	21-1/2” x 11” x 5-7/8” 54.6cm x 28cm x 14.9cm
Master Carton Weight	13 lbs. 5.9kg
Pallet Quantity	1008
Pallet Dimensions	48”L x 40”W x 46”D 122cm x 102cm x 117cm

invensys.
Controls Americas
191 E. North Avenue
Carol Stream, Illinois 60188 USA
Cust. Service Telephone +1 800 951 5526
Cust. Service Facsimile +1 630 260 7299

3505 Laird Road Unit #14
Mississauga, Ontario L5L 5Y7 Canada
Cust. Service Telephone +1 800 668 6958
Cust. Service Facsimile +1 905 828 1265

For Technical Service
Telephone +1 800 445 8299
Facsimile +1 630 260 7243
technicalservice@invensys.com

Visit us on the web at
www.icca.invensys.com

MSDS Number: **E5125** * * * * * *Effective Date:* ***11/09/06*** * * * * * *Supercedes:* ***03/15/04*** 277

MSDS **Material Safety Data Sheet**

From: **Mallinckrodt Baker, Inc.**
222 Red School Lane
Phillipsburg, NJ 08865

Mallinckrodt CHEMICALS J.T.Baker

24 Hour Emergency Telephone: 908-859-2151
CHEMTREC: 1-800-424-9300

National Response in Canada
CANUTEC: 613-996-6666

Outside U.S. and Canada
Chemtrec: 703-527-3887

NOTE: CHEMTREC, CANUTEC and National Response Center emergency numbers to be used only in the event of chemical emergencies involving a spill, leak, fire, exposure or accident involving chemicals.

All non-emergency questions should be directed to Customer Service (1-800-582-2537) for assistance.

ETHYLENE GLYCOL

1. Product Identification

Synonyms: 1,2-Ethanediol; glycol; 1,2-Dihydroxyethane; Ethylene Alcohol; Ethulene Dihydrate
CAS No.: 107-21-1
Molecular Weight: 62.07
Chemical Formula: CH2OHCH2OH
Product Codes:
J.T. Baker: 5387, 5845, 9140, 9298, 9300, 9346, 9356, L715
Mallinckrodt: 5001, 5037

2. Composition/Information on Ingredients

Ingredient	CAS No	Percent	Hazardous
Ethylene Glycol	107-21-1	99 - 100%	Yes

3. Hazards Identification

Emergency Overview

WARNING! HARMFUL OR FATAL IF SWALLOWED. HARMFUL IF INHALED OR ABSORBED THROUGH SKIN. MAY CAUSE ALLERGIC SKIN REACTION. MAY CAUSE IRRITATION TO SKIN, EYES, AND RESPIRATORY TRACT. AFFECTS CENTRAL NERVOUS SYSTEM.

SAF-T-DATA(tm) Ratings (Provided here for your convenience)

Health Rating: 2 - Moderate (Life)
Flammability Rating: 1 - Slight
Reactivity Rating: 1 - Slight
Contact Rating: 3 - Severe (Life)
Lab Protective Equip: GOGGLES & SHIELD; LAB COAT & APRON; VENT HOOD; PROPER GLOVES
Storage Color Code: Green (General Storage)

Potential Health Effects

Inhalation:
Vapor inhalation is generally not a problem unless heated or misted. Exposure to vapors over an extended time period has caused throat irritation and headache. May cause nausea, vomiting, dizziness and drowsiness. Pulmonary edema and central nervous system depression may also develop. When heated or misted, has produced rapid, involuntary eye movement and coma.
Ingestion:
Initial symptoms in massive dosage parallel alcohol intoxication, progressing to CNS depression, vomiting, headache, rapid respiratory and heart rate, lowered blood pressure, stupor, collapse, and unconsciousness with convulsions. Death from respiratory arrest or cardiovascular collapse may follow. Lethal dose in humans: 100 ml (3-4 ounces).
Skin Contact:
Minor skin irritation and penetration may occur.
Eye Contact:
Splashes may cause irritation, pain, eye damage.
Chronic Exposure:
Repeated small exposures by any route can cause severe kidney problems. Brain damage may also occur. Skin allergy can develop. May damage the developing fetus.
Aggravation of Pre-existing Conditions:
Persons with pre-existing skin disorders, eye problems, or impaired liver, kidney, or respiratory function may be more susceptible to the effects of this substance.

---

4. First Aid Measures

Inhalation:
Remove to fresh air. If not breathing, give artificial respiration. If breathing is difficult, give oxygen. Call a physician.
Ingestion:
Induce vomiting immediately as directed by medical personnel. Never give anything by mouth to an unconscious person. Get medical attention.
Skin Contact:
Remove any contaminated clothing. Wash skin with soap and water for at least 15 minutes. Get medical attention if irritation develops or persists.
Eye Contact:
Immediately flush eyes with plenty of water for at least 15 minutes, lifting lower and upper eyelids occasionally. Get medical attention immediately.

Note to Physician:
Give sodium bicarbonate intravenously to treat acidosis. Urinalysis may show low specific gravity, proteinuria, pyuria,

cylindruria, hematuria, calcium oxide, and hippuric acid crystals. Ethanol can be used in antidotal treatment but monitor blood glucose when administering ethanol because it can cause hypoglycemia. Consider infusion of a diuretic such as mannitol to help prevent or control brain edema and hemodialysis to remove ethylene glycol from circulation.

---

5. Fire Fighting Measures

Fire:
Flash point: 111C (232F) CC
Autoignition temperature: 398C (748F)
Flammable limits in air % by volume:
lel: 3.2; uel: 15.3
Slight to moderate fire hazard when exposed to heat or flame.
Explosion:
Above flash point, vapor-air mixtures are explosive within flammable limits noted above. Containers may explode when involved in a fire.
Fire Extinguishing Media:
Dry chemical, foam or carbon dioxide. Water or foam may cause frothing. Water spray may be used to extinguish surrounding fire and cool exposed containers. Water spray will also reduce fume and irritant gases.
Special Information:
In the event of a fire, wear full protective clothing and NIOSH-approved self-contained breathing apparatus with full facepiece operated in the pressure demand or other positive pressure mode. Toxic gases and vapors may be released if involved in a fire.

---

6. Accidental Release Measures

Ventilate area of leak or spill. Remove all sources of ignition. Wear appropriate personal protective equipment as specified in Section 8. Isolate hazard area. Keep unnecessary and unprotected personnel from entering. Contain and recover liquid when possible. Use non-sparking tools and equipment. Collect liquid in an appropriate container or absorb with an inert material (e. g., vermiculite, dry sand, earth), and place in a chemical waste container. Do not use combustible materials, such as saw dust. Do not flush to sewer! US Regulations (CERCLA) require reporting spills and releases to soil, water and air in excess of reportable quantities. The toll free number for the US Coast Guard National Response Center is (800) 424-8802.

---

7. Handling and Storage

Keep in a tightly closed container, stored in a cool, dry, ventilated area. Protect against physical damage. Separate from acids and oxidizing materials. Containers of this material may be hazardous when empty since they retain product residues (vapors, liquid); observe all warnings and precautions listed for the product.

---

8. Exposure Controls/Personal Protection

Airborne Exposure Limits:
-OSHA Permissible Exposure Limit (PEL):

50 ppm Ceiling

-ACGIH Threshold Limit Value (TLV):
50 ppm Ceiling (vapor)
Ventilation System:
A system of local and/or general exhaust is recommended to keep employee exposures below the Airborne Exposure Limits. Local exhaust ventilation is generally preferred because it can control the emissions of the contaminant at its source, preventing dispersion of it into the general work area. Please refer to the ACGIH document, *Industrial Ventilation, A Manual of Recommended Practices*, most recent edition, for details.
Personal Respirators (NIOSH Approved):
If the exposure limit is exceeded, a half-face respirator with an organic vapor cartridge and particulate filter (NIOSH type P95 or R95 filter) may be worn for up to ten times the exposure limit or the maximum use concentration specified by the appropriate regulatory agency or respirator supplier, whichever is lowest. A full-face piece respirator with an organic vapor cartridge and particulate filter (NIOSH P100 or R100 filter) may be worn up to 50 times the exposure limit, or the maximum use concentration specified by the appropriate regulatory agency or respirator supplier, whichever is lowest. Please note that N series filters are not recommended for this material. For emergencies or instances where the exposure levels are not known, use a full-face piece positive-pressure, air-supplied respirator.
WARNING: Air-purifying respirators do not protect workers in oxygen-deficient atmospheres.
Skin Protection:
Wear protective gloves and clean body-covering clothing.
Eye Protection:
Use chemical safety goggles. Maintain eye wash fountain and quick-drench facilities in work area.

---

9. Physical and Chemical Properties

Appearance:
Clear oily liquid.
Odor:
Odorless.
Solubility:
Miscible in water.
Specific Gravity:
1.1 @20C/4C
pH:
No information found.
% Volatiles by volume @ 21C (70F):
100
Boiling Point:
197.6C (388F)
Melting Point:
-13C (9F)
Vapor Density (Air=1):
2.14
Vapor Pressure (mm Hg):
0.06 @ 20C (68F)
Evaporation Rate (BuAc=1):
No information found.

---

10. Stability and Reactivity

Stability:
Stable under ordinary conditions of use and storage.
Hazardous Decomposition Products:
Carbon dioxide and carbon monoxide may form when heated to decomposition. May produce acrid smoke and irritating fumes when heated to decomposition.
Hazardous Polymerization:
Will not occur.
Incompatibilities:
Strong oxidizing agents. Reacts violently with chlorosulfonic acid, oleum, sulfuric acid, perchloric acid. Causes ignition at room temperature with chromium trioxide, potassium permanganate and sodium peroxide; causes ignition at 212F(100C) with ammonium dichromate, silver chlorate, sodium chloride and uranyl nitrate.
Conditions to Avoid:
Heat, flames, ignition sources, water (absorbs readily) and incompatibles.

---

11. Toxicological Information

Toxicological Data:
Oral rat LD50: 4700 mg/kg; skin rabbit LD50: 9530 mg/kg.
Irritation - skin rabbit: 555mg(open), mild; eye rabbit: 500mg/24H, mild.
Investigated as a tumorigen, mutagen, reproductive effector.
Reproductive Toxicity:
Has shown teratogenic effects in laboratory animals.

--------\Cancer Lists\----------

Ingredient	---NTP Carcinogen--- Known	Anticipated	IARC Category
Ethylene Glycol (107-21-1)	No	No	None

---

12. Ecological Information

Environmental Fate:
When released into the soil, this material is expected to readily biodegrade. When released into the soil, this material is expected to leach into groundwater. When released into the soil, this material is not expected to evaporate significantly. When released into water, this material is expected to readily biodegrade. When released into the water, this material is expected to have a half-life between 1 and 10 days. This material is not expected to significantly bioaccumulate. This material has a log octanol-water partition coefficient of less than 3.0. When released into water, this material is not expected to evaporate significantly. When released into the air, this material is expected to be readily degraded by reaction with photochemically produced hydroxyl radicals. When released into the air, this material is expected to have a half-life between 1 and 10 days.
Environmental Toxicity:
The LC50/96-hour values for fish are over 100 mg/l.

---

13. Disposal Considerations

Whatever cannot be saved for recovery or recycling should be managed in an appropriate and approved waste disposal

facility. Processing, use or contamination of this product may change the waste management options. State and local disposal regulations may differ from federal disposal regulations. Dispose of container and unused contents in accordance with federal, state and local requirements.

14. Transport Information

Not regulated.

15. Regulatory Information

```
  --------\Chemical Inventory Status - Part 1\---------------------------------
  Ingredient                                        TSCA  EC   Japan  Australia
  ----------------------------------------------  ----  ---  -----  ---------
  Ethylene Glycol (107-21-1)                         Yes  Yes   Yes
Yes

  --------\Chemical Inventory Status - Part 2\---------------------------------
                                                          --Canada--
  Ingredient                                        Korea  DSL   NDSL  Phil.
  ----------------------------------------------  -----  ---   ----  -----
  Ethylene Glycol (107-21-1)                         Yes   Yes   No     Yes

  --------\Federal, State & International Regulations - Part 1\----------------
                                              -SARA 302-    ------SARA 313------
  Ingredient                                  RQ    TPQ     List  Chemical Catg.
  ----------------------------------------  ---   -----   ----  --------------
  Ethylene Glycol (107-21-1)                  No    No      Yes        No

  --------\Federal, State & International Regulations - Part 2\----------------
                                                         -RCRA-    -TSCA-
  Ingredient                                  CERCLA     261.33     8(d)
  ----------------------------------------  ------     ------    ------
  Ethylene Glycol (107-21-1)                  5000       No         No


Chemical Weapons Convention:  No     TSCA 12(b):  No     CDTA:  No
SARA 311/312:  Acute: Yes      Chronic: Yes  Fire: No  Pressure: No
Reactivity: No          (Pure / Liquid)
```

Australian Hazchem Code: None allocated.
Poison Schedule: None allocated.
WHMIS:
This MSDS has been prepared according to the hazard criteria of the Controlled Products Regulations (CPR) and the MSDS contains all of the information required by the CPR.

16. Other Information

NFPA Ratings: Health: **1** Flammability: **1** Reactivity: **0**
Label Hazard Warning:
WARNING! HARMFUL OR FATAL IF SWALLOWED. HARMFUL IF INHALED OR ABSORBED THROUGH SKIN. MAY CAUSE ALLERGIC SKIN REACTION. MAY CAUSE IRRITATION TO SKIN, EYES, AND RESPIRATORY TRACT. AFFECTS CENTRAL NERVOUS SYSTEM.
Label Precautions:
Do not breathe vapor or mist.
Use only with adequate ventilation.
Keep container closed.
Avoid contact with eyes, skin and clothing.
Wash thoroughly after handling.
Label First Aid:
If inhaled, remove to fresh air. If not breathing, give artificial respiration. If breathing is difficult, give oxygen. In case of contact, immediately flush skin or eyes with plenty of water for at least 15 minutes. Call a physician if irritation develops or persists. If swallowed, give water or milk to drink and induce vomiting. Never give anything by mouth to an unconscious person. In all cases call a physician.
Product Use:
Laboratory Reagent.
Revision Information:
No Information Found.
Disclaimer:
****
Mallinckrodt Baker, Inc. provides the information contained herein in good faith but makes no representation as to its comprehensiveness or accuracy. This document is intended only as a guide to the appropriate precautionary handling of the material by a properly trained person using this product. Individuals receiving the information must exercise their independent judgment in determining its appropriateness for a particular purpose. MALLINCKRODT BAKER, INC. MAKES NO REPRESENTATIONS OR WARRANTIES, EITHER EXPRESS OR IMPLIED, INCLUDING WITHOUT LIMITATION ANY WARRANTIES OF MERCHANTABILITY, FITNESS FOR A PARTICULAR PURPOSE WITH RESPECT TO THE INFORMATION SET FORTH HEREIN OR THE PRODUCT TO WHICH THE INFORMATION REFERS. ACCORDINGLY, MALLINCKRODT BAKER, INC. WILL NOT BE RESPONSIBLE FOR DAMAGES RESULTING FROM USE OF OR RELIANCE UPON THIS INFORMATION.
****
Prepared by: Environmental Health & Safety
Phone Number: (314) 654-1600 (U.S.A.)

UNITED ELCHEM INDUSTRIES INC -- PVC CLEAR CLEANER, PLASTI-WELD SERIES 803

==========

MSDS Safety Information

==========

FSC: 6850
MSDS Date: 08/01/1991
MSDS Num: BQQYD
LIIN: 00N036420
Product ID: PVC CLEAR CLEANER, PLASTI-WELD SERIES 803
MFN: 01
Responsible Party
Cage: UNIEL
Name: UNITED ELCHEM INDUSTRIES INC
Address: 11535 REEDER RD
City: DALLAS TX 75229
Info Phone Number: 800-633-4579
Emergency Phone Number: 800-424-9300 (CHEMTREC)
Preparer's Name: RAYMOND L. OSWALT
Published: Y

==========

Contractor Summary

==========

Cage: UNIEL
Name: UNITED ELCHEM INDUSTRIES INC
Address: 11535 REEDER RD
City: DALLAS TX 75229
Phone: 972-241-6601

==========

Ingredients

==========

Cas: 1338-23-4
RTECS #: EL9480000
Name: 2-BUTANONE, PEROXIDE; (METHYL ETHYL KETONE PEROXIDE (MEKP)) (SARA III)
% Wt: 80-90
OSHA PEL: 0.7 PPM, C
ACGIH TLV: 200 PPM, C
EPA Rpt Qty: 10 LBS
DOT Rpt Qty: 10 LBS

Cas: 67-64-1
RTECS #: AL3150000
Name: ACETONE (SARA III)
% Wt: 10-20
OSHA PEL: 1000PPM
ACGIH TLV: 750PPM/1000STEL;9293
EPA Rpt Qty: 5000 LBS
DOT Rpt Qty: 5000 LBS

RTECS #: 9999999VO
Name: VOLATILE ORGANIC COMPOUNDS
% Wt: 88+/-2%

Cas: 109-99-9
RTECS #: LU5950000
Name: FURAN, TETRAHYDRO-; (TETRAHYDROFURAN (THR))
EPA Rpt Qty: 1000 LBS
DOT Rpt Qty: 1000 LBS
==========
Health Hazards Data
==========
LD50 LC50 Mixture: NONE SPECIFIED BY MANUFACTURER.
Route Of Entry Inds - Inhalation: YES
Skin: YES
Ingestion: YES
Carcinogenicity Inds - NTP: NO
IARC: NO
OSHA: NO
Effects of Exposure: INHAL:MAY CAUSE IRRIT OF MOUCOUS MEMBRANES, NOSE & THROAT, HEADACHE, DIZZ, NAUS, NUMBNESS OF EXTREMITIES AND NARCOSIS IN HIGH CONCENTRATIONS. CAN CAUSE CNS DEPRESS, LIVER DAMAGE IN ANIMALS, AND IN HIG H CONC HAS CAUSED RETARDATION OF FETAL DEVELOPMENT IN RATS. INGEST:MAY BE ASPERATED INTO LUNGS (EFTS OF OVEREXP)
Explanation Of Carcinogenicity: NOT RELEVANT
Signs And Symptions Of Overexposure: HLTH HAZ:OR CAUSE SYSTEMIC EFFECTS DESCRIBED UNDER INHALATION. SKIN:CHRONIC CONTACT MAY LEAD TO IRRITATION AND DERMATITIS. CHRONIC EXPOSURE TO VAPORS OF HIGH CONCENTRATION MAY CAUSE DERMATITIS. MAY PO SSIBLY BE ABSORBED THROUGH THE SKIN. EYE:VAPORS OF DIRECT CONTACT MAY CAUSE IRRITATION.
Medical Cond Aggravated By Exposure: NONE SPECIFIED BY MANUFACTURER.
First Aid: INHAL:REMOVE TO FRESH AIR & CALL EMER MD CARE. IF BRTHG IS DFCLT, GIVE OXYGEN. IF NOT BRTHG, GIVE ARTF RESP. KEEP VICTIM WARM & QUIET. SKIN:FLUSH W/WATER, THEN WASH THORO W/SOAP & WATER. REMOVE & ISOL ATE CONTAM CLTHG & SHOES AT THE SITE. CALL A POISON CONTROL CNTR/MD IF IRRIT PERSISTS. EYES:FLUSH W/RUNNING WATER FOR AT LEAST 15 MIN & CALL POISON CONTROL CNTNR/MD IF ANY IRRIT PERSISTS. (SUPP DATA)
==========
Handling and Disposal
==========
Spill Release Procedures: VENTILATE AREA, STOP LEAK IF IT CAN BE DONE WITHOUT RISK. TAKE UP WITH SAND, EARTH OR OTHER NON-COMBUSTIBLE ABSORBENT MATERIAL.
Neutralizing Agent: NONE SPECIFIED BY MANUFACTURER.
Waste Disposal Methods: DISPOSE OF IN ACCORDANCE WITH LOCAL, STATE, AND FEDERAL REGULATONS.
Handling And Storage Precautions: KEEP AWAY FROM HEAT, SPARKS AND FLAMES; STORE IN COOL, DRY PLACE.

Other Precautions: CONTAINERS, EVEN THOSE THAT HAVE BEEN EMPTIED, WILL RETAIN RESIDUE AND VAPORS. HANDLE EMPTY CONTAINERS AS IF THEY WERE FULL. CONTACT LOCAL AND STATE AGENCIES FOR PROPER DISPOSAL OF THESE CONTAINERS.

==========

Fire and Explosion Hazard Information

==========

Flash Point Method: TCC
Flash Point Text: 0F,-18C
Lower Limits: 1.8%
Upper Limits: 11.8%
Extinguishing Media: USE DRY CHEMICAL, CO*2, WATER SPRAY OR REGULAR FOAM.
Fire Fighting Procedures: WEAR NIOSH/MSHA APPROVED SCBA AND FULL PROTECTIVE EQUIPMENT (FP N). EVACUATE AREA. CALL FIRE DEPARTMENT IMMEDIATELY
Unusual Fire/Explosion Hazard: NONE SPECIFIED BY MANUFACTURER.

==========

Control Measures

==========

Respiratory Protection: NIOSH/MSHA APPROVED CANNISTER RESPIRATOR IN ABSENCE OF ADEQUATE VENTILATION.
Ventilation: GEN EXHAUST:EXHAUST VENT CAPABLE OF MAINTAINING EMISSIONS AT POINT OF USE BELOW PEL. LOCAL EXHAUST:OPEN DOORS(SUPP DATA)
Protective Gloves: RUBBER GLOVES
Eye Protection: CHEMCIAL WORKERS GOGGLES (FP N).
Other Protective Equipment: EYE WASH AND SAFETY SHOWER SHOULD BE AVAILABLE.
Work Hygienic Practices: NONE SPECIFIED BY MANUFACTURER.
Supplemental Safety and Health: FIRST AID:DRINK PLENTY OF WATER. DO NOT INDUCE VOMITING, AND CALL A POISON CONTROL CENTER OR PHYSICIAN IMMEDIATELY. AVOID ALCOHOLIC BEVERAGES. NEVER GIVE ANYTHING BY MOUTH TO AN UNCONSCIOUS PERSON. VE NT:AND WINDOWS. IF USED IN ENCLOSED AREA USE EXHAUST FAN TO REMOVE FUMES. (NOTE:CHECK UL LISTING ON FAN BEFORE USING.)

==========

Physical/Chemical Properties

==========

HCC: F3
B.P. Text: 151F,66C
Vapor Pres: 145@20 PSI
Vapor Density: 2.5
Spec Gravity: 0.94+/-2%
Evaporation Rate & Reference: 5.5-8.0 (BUAC)
Solubility in Water: NEGLIGIBLE
Appearance and Odor: LIQUID, ETHER LIKE ODOR.

==========

Reactivity Data

==========

Stability Indicator: YES
Stability Condition To Avoid: HEAT, SPARKS, OPEN FLAMES
Materials To Avoid: ACIDS, OXIDIZING MATLS, ALKALIS, CHLORINATED INORGANICS (POTASSIUM/CALCIUM/SODIUM HYPOCHLORITE) COPPER/COPPER ALLOYS.

Hazardous Decomposition Products: CARBON MONOXIDE, CARBON DIOXIDE, HYDROGEN CHLORIDE, SMOKE
287
Hazardous Polymerization Indicator: NO
Conditions To Avoid Polymerization: NOT RELEVANT
==========
Toxicological Information
==========
==========
Ecological Information
==========
==========
MSDS Transport Information
==========
==========
Regulatory Information
==========
==========
Other Information
==========
==========
Transportation Information
==========
Responsible Party Cage: UNIEL
Trans ID NO: 40816
Product ID: PVC CLEAR CLEANER, PLASTI-WELD SERIES 803
MSDS Prepared Date: 08/01/1991
Review Date: 06/07/1993
MFN: 1
Multiple KIT Number: 0
Review IND: Y
==========
Detail DOT Information
==========
DOT PSN Code: GJJ
Symbols: G
DOT Proper Shipping Name: FLAMMABLE LIQUIDS, N.O.S.
Hazard Class: 3
UN ID Num: UN1993
DOT Packaging Group: II
Label: FLAMMABLE LIQUID
Special Provision: T8,T31
Non Bulk Pack: 202
Bulk Pack: 242
Max Qty Pass: 5L
Max Qty Cargo: 60 L
Vessel Stow Req: B
==========
Detail IMO Information

==========
IMO PSN Code: HIN
IMO Proper Shipping Name: FLAMMABLE LIQUID, N.O.S. o
IMDG Page Number: 3230
UN Number: 1993
UN Hazard Class: 3.2
IMO Packaging Group: I/II
Subsidiary Risk Label: -
EMS Number: 3-07
MED First Aid Guide NUM: T
==========
Detail IATA Information
==========
IATA PSN BV
IATA UN ID Num: 1993
IATA Proper Shipping Name: FLAMMABLE LIQUID, N.O.S. *
IATA UN Class: 3
IATA Label: FLAMMABLE LIQUID
UN Packing Group: II
Packing Note Passenger: 305
Max Quant Pass: 5L
Max Quant Cargo: 60L
Packaging Note Cargo: 307
==========
Detail AFI Information
==========
AFI PSN BV
AFI Symbols: *
AFI Proper Shipping Name: FLAMMABLE LIQUIDS, N.O.S.
AFI Hazard Class: 3
AFI UN ID NUM: UN1993
AFI Packing Group: II
Special Provisions: P5
Back Pack Reference: A7.3
==========
HAZCOM Label
==========
Product ID: PVC CLEAR CLEANER, PLASTI-WELD SERIES 803
Cage: UNIEL
Company Name: UNITED ELCHEM INDUSTRIES INC
Street: 11535 REEDER RD
City: DALLAS TX
Zipcode: 75229
Health Emergency Phone: 214-241-6208
Label Required IND: Y
Date Of Label Review: 11/19/1992
Status Code: C
Label Date: 11/19/1992

Origination Code: G
Chronic Hazard IND: Y
Eye Protection IND: YES
Skin Protection IND: YES
Signal Word: DANGER
Respiratory Protection IND: YES
Health Hazard: Slight
Contact Hazard: Slight
Fire Hazard: Severe
Reactivity Hazard: None
Hazard And Precautions: FLAMMABLE. KEEP AWAY FROM HEAT, SPARKS, AND FLAME. ACUTE:INHALATION MAY CAUSE IRRITATION OF MUCOUS MEMBRANE, NOSE AND THROAT, HEADACHE, DIZZINESS, NAUSEA, NUMBNESS OF THE EXTREMITIES. MAY CAUSE EYE AN D SKIN IRRITATION. CHRONIC:LIVER DAMAGE. DERMATITIS AND IRRITATION OF SKIN.
==========
Disclaimer (provided with this information by the compiling agencies): This information is formulated for use by elements of the Department of Defense. The United States of America in no manner whatsoever expressly or implied warrants, states, or intends said information to have any application, use or viability by or to any person or persons outside the Department of Defense nor any person or persons contracting with any instrumentality of the United States of America and disclaims all liability for such use. Any person utilizing this instruction who is not a military or civilian employee of the United States of America should seek competent professional advice to verify and assume responsibility for the suitability of this information to their particular situation regardless of similarity to a corresponding Department of Defense or other government situation.

UNITED STATES GYPSUM COMPANY -- USG LIGHTWEIGHT ALL PURPOSE JOINT COMPOUND,K-LITE -- 5640-00F027877

========== Product Identification ==========

Product ID:USG LIGHTWEIGHT ALL PURPOSE JOINT COMPOUND,K-LITE
MSDS Date:09/03/1992
FSC:5640
NIIN:00F027877
MSDS Number: BRBGG
=== Responsible Party ===
Company Name:UNITED STATES GYPSUM COMPANY
Address:125 S FRANKLIN ST
City:CHICAGO
State:IL
ZIP:60606-4678
Country:US
Info Phone Num:312-606-4542
Emergency Phone Num:312-606-4542
CAGE:61357
=== Contractor Identification ===
Company Name:UNITED STATES GYPSUM CO
Address:101 S WACKER DR
Box:City:CHICAGO
State:IL
ZIP:60606-4302
Country:US
Phone:312-606-4000 (EMERG /4542)
CAGE:61357

========== Composition/Information on Ingredients ==========

Ingred Name:CALCIUM CARBONATE, DOMOLITE, LIMESTONE, WHITING
CAS:1317-65-3
RTECS #:EV9580000
OSHA PEL:15 MG/CUM (DUST)
ACGIH TLV:10 MG/CUM (DUST)

Ingred Name:WATER
CAS:7732-18-5
RTECS #:ZC0110000

Ingred Name:SILICA, MICA, MUSCOVITE

CAS:12001-26-2
RTECS #:VV8760000
OSHA PEL:20 MPPCF
ACGIH TLV:3 MG/M3 RDUST; 9293

Ingred Name:TALC (POWDER), (ASBESTOS FREE), TALCUM; HYDROUS MAGNESIUM SILICATE
CAS:14807-96-6
RTECS #:WW2710000
OSHA PEL:20 MPPCF
ACGIH TLV:2 MG/CUM (RESP DUST)

Ingred Name:PERLITE
CAS:93763-70-3
RTECS #:SD5254000
Other REC Limits:30 MPPCF
OSHA PEL:5 MG/CUM (DUST)
ACGIH TLV:10 MG/CUM TOTAL DUST

Ingred Name:POLYVINYL ACETATE, VINYL ACETATE POLYMER
CAS:9003-20-7
RTECS #:AK0920000

Ingred Name:ETHYLENE GLYCOL, GLYCOL
CAS:107-21-1
RTECS #:KW2975000
Fraction by Wt: 0-1%
Other REC Limits:10 MG/CUM
ACGIH TLV:C 127 MG/CUM
EPA Rpt Qty:1 LB
DOT Rpt Qty:1 LB

Ingred Name:GYPSUM
CAS:13397-24-5
RTECS #:MG2360000
Other REC Limits:5 MG/CUM RESP DUST
OSHA PEL:15 MG/CUM TOTAL DUST
ACGIH TLV:10 MG/CUM

Ingred Name:VOL ORGANIC CMPD: <20 G/L
RTECS #:9999999VO

========== Hazards Identification ==========

Routes of Entry: Inhalation:YES Skin:NO Ingestion:NO
Reports of Carcinogenicity:NTP:NO IARC:NO OSHA:NO
Health Hazards Acute and Chronic:INHALATION: NOSE, THROAT & UPPER RESPIRATORY SYSTEM IRRITATION. EYES: TRANSITORY IRRITATION. SKIN: DRYNESS.
Explanation of Carcinogenicity:NONE
Effects of Overexposure:INHALATION: LUNG DAMAGE (PULMONARY FIBROSIS).
Medical Cond Aggravated by Exposure:UPPER RESPIRATORY & LUNG DISEASE, BRONCHITIS, EMPHYSEMA, & ASTHMA

========== First Aid Measures ==========

First Aid:EYES: FLUSH W/PLENTY OF WATER TO REMOVE PARTICLES. SKIN: WASH THOROUGHLY W/SOAP & WATER. INHALATION: REMOVE TO FRESH AIR. INGESTION: OBTAIN MEDICAL ATTENTION IN ALL CASES.

========== Fire Fighting Measures ==========

Extinguishing Media:NOT COMBUSTIBLE

========== Accidental Release Measures ==========

Spill Release Procedures:SCOOP UP. WASH DOWN AREA BEFORE MATERIAL DRIES.

========== Handling and Storage ==========

Handling and Storage Precautions:STORE IN COOL, DRY PLACE. AVOID FREEZING.
Other Precautions:WHEN FINISHING JOINTS USING THESE PRODUCTS, WET SANDING IS RECOMMENDED.

========== Exposure Controls/Personal Protection ==========

Respiratory Protection:USE NIOSH APPROVED DUST RESPIRATOR IF DRY SANDED
Ventilation:GENERAL MECHANICAL OR LOCAL EXHAUST
Eye Protection:SAFETY GLASSES
Supplemental Safety and Health
HEALTH EFFECTS ARE DERIVED FROM SPRAY MIST OR DUST FROM DRY SANDING. PRODUCT MAY CONTAIN INGREDIENTS 1317-65-3 OR 13397-24-5.

========== Physical/Chemical Properties ==========

Spec Gravity:1.6
pH:8-9.5
Appearance and Odor:OFF WHITE PASTE W/LOW ODOR
Percent Volatiles by Volume: 35

========== Stability and Reactivity Data ==========

Stability Indicator/Materials to Avoid:YES
Stability Condition to Avoid:FREEZING

========== Disposal Considerations ==========

Waste Disposal Methods:SANITARY LANDFILL IN ACCORDANCE W/FEDERAL, STATE, & LOCAL REGULATIONS.

Material Safety Data Sheet
Glue-Off Adhesive Remover

ACC# 89847

Section 1 - Chemical Product and Company Identification

MSDS Name: Glue-Off Adhesive Remover
Catalog Numbers: S17199AND
Synonyms: None.
Company Identification:
Fisher Scientific
1 Reagent Lane
Fair Lawn, NJ 07410
For information, call: 201-796-7100
Emergency Number: 201-796-7100
For CHEMTREC assistance, call: 800-424-9300
For International CHEMTREC assistance, call: 703-527-3887

Section 2 - Composition, Information on Ingredients

CAS#	Chemical Name	Percent	EINECS/ELINCS
142-82-5	n-Heptane	>70	205-563-8
64-17-5	Ethyl alcohol	?	200-578-6
9006-04-6	Rubber	?	232-689-0

Section 3 - Hazards Identification

EMERGENCY OVERVIEW

Appearance: clear, colorless liquid. Flash Point: 25 deg F.
Warning! Flammable liquid and vapor. Breathing vapors may cause drowsiness and dizziness. Causes eye and skin irritation. Aspiration hazard if swallowed. Can enter lungs and cause damage. May cause respiratory tract irritation. Dangerous for the environment.
Target Organs: Central nervous system, skin.

Potential Health Effects
Eye: Causes eye irritation.
Skin: Causes skin irritation. Prolonged and/or repeated contact may cause defatting of the skin and dermatitis.
Ingestion: Causes gastrointestinal irritation with nausea, vomiting and diarrhea. Aspiration of material into the lungs may cause chemical pneumonitis, which may be fatal.
Inhalation: Inhalation of high concentrations may cause central nervous system effects characterized by nausea, headache, dizziness, unconsciousness and coma. Causes respiratory tract irritation. Aspiration may lead to pulmonary edema. Vapors may cause dizziness or suffocation.
Chronic: Prolonged or repeated skin contact may cause dermatitis. Effects may be delayed.

Section 4 - First Aid Measures

Eyes: Flush eyes with plenty of water for at least 15 minutes, occasionally lifting the upper and lower eyelids. Get medical aid immediately.
Skin: Get medical aid. Flush skin with plenty of water for at least 15 minutes while removing contaminated clothing and shoes. Wash clothing before reuse.
Ingestion: Do not induce vomiting. If victim is conscious and alert, give 2-4 cupfuls of milk or water. Possible

aspiration hazard. Get medical aid immediately.
Inhalation: Get medical aid immediately. Remove from exposure and move to fresh air immediately. If not breathing, give artificial respiration. If breathing is difficult, give oxygen. Do NOT use mouth-to-mouth resuscitation.
Notes to Physician: Treat symptomatically and supportively.

Section 5 - Fire Fighting Measures

General Information: As in any fire, wear a self-contained breathing apparatus in pressure-demand, MSHA/NIOSH (approved or equivalent), and full protective gear. Use water spray to keep fire-exposed containers cool. Water may be ineffective. Material is lighter than water and a fire may be spread by the use of water. Containers may explode in the heat of a fire. Flammable liquid and vapor. Will be easily ignited by heat, sparks or flame. Vapors are heavier than air and may travel to a source of ignition and flash back. Vapors can spread along the ground and collect in low or confined areas.
Extinguishing Media: For small fires, use dry chemical, carbon dioxide, water spray or alcohol-resistant foam. For large fires, use water spray, fog, or alcohol-resistant foam. Water may be ineffective. Do NOT use straight streams of water. Cool containers with flooding quantities of water until well after fire is out.
Flash Point: 25e deg F (-3.89 deg C)
Autoignition Temperature: 399 deg F (203.89 deg C)
Explosion Limits, Lower:1.05
Upper: 6.7
NFPA Rating: (estimated) Health: 1; Flammability: 3; Instability: 0

Section 6 - Accidental Release Measures

General Information: Use proper personal protective equipment as indicated in Section 8.
Spills/Leaks: Absorb spill with inert material (e.g. vermiculite, sand or earth), then place in suitable container. Avoid runoff into storm sewers and ditches which lead to waterways. Clean up spills immediately, observing precautions in the Protective Equipment section. Remove all sources of ignition. Use a spark-proof tool. Provide ventilation. A vapor suppressing foam may be used to reduce vapors.

Section 7 - Handling and Storage

Handling: Wash thoroughly after handling. Ground and bond containers when transferring material. Use spark-proof tools and explosion proof equipment. Avoid contact with eyes, skin, and clothing. Empty containers retain product residue, (liquid and/or vapor), and can be dangerous. Keep container tightly closed. Keep away from heat, sparks and flame. Do not pressurize, cut, weld, braze, solder, drill, grind, or expose empty containers to heat, sparks or open flames. Use only with adequate ventilation. Avoid breathing vapor.
Storage: Keep away from heat, sparks, and flame. Keep away from sources of ignition. Store in a tightly closed container. Store in a cool, dry, well-ventilated area away from incompatible substances. Flammables-area.

Section 8 - Exposure Controls, Personal Protection

Engineering Controls: Facilities storing or utilizing this material should be equipped with an eyewash facility and a safety shower. Use adequate general or local exhaust ventilation to keep airborne concentrations below the permissible exposure limits.
Exposure Limits

Chemical Name	ACGIH	NIOSH	OSHA - Final PELs
n-Heptane	400 ppm TWA; 500 ppm STEL	85 ppm TWA; 350 mg/m3 TWA 750 ppm IDLH	500 ppm TWA; 2000 mg/m3 TWA
Ethyl alcohol	1000 ppm TWA	1000 ppm TWA; 1900 mg/m3 TWA 3300 ppm IDLH	1000 ppm TWA; 1900 mg/m3 TWA

Rubber	0.001 mg/m3 TWA (inhalable fraction, as total proteins); Skin - potential significant contribution to overall exposure by the cutaneous r oute	none listed	296 none listed

OSHA Vacated PELs: n-Heptane: 400 ppm TWA; 1600 mg/m3 TWA Ethyl alcohol: 1000 ppm TWA; 1900 mg/m3 TWA Rubber: No OSHA Vacated PELs are listed for this chemical.
Personal Protective Equipment
Eyes: Wear appropriate protective eyeglasses or chemical safety goggles as described by OSHA's eye and face protection regulations in 29 CFR 1910.133 or European Standard EN166.
Skin: Wear neoprene gloves, apron, and/or clothing. Use polyvinyl alcohol or fluorocarbon rubber (viton) gloves.
Clothing: Wear appropriate protective clothing to prevent skin exposure.
Respirators: Follow the OSHA respirator regulations found in 29 CFR 1910.134 or European Standard EN 149. Use a NIOSH/MSHA or European Standard EN 149 approved respirator if exposure limits are exceeded or if irritation or other symptoms are experienced.

Section 9 - Physical and Chemical Properties

Physical State: Liquid
Appearance: clear, colorless
Odor: mild odor - gasoline-like
pH: Not available.
Vapor Pressure: 40.0 mm Hg
Vapor Density: 3.5 (Air=1)
Evaporation Rate:2.8 (Butyl acetate=1)
Viscosity: Not available.
Boiling Point: 209 deg F
Freezing/Melting Point:-131 deg F
Decomposition Temperature: Not available.
Solubility: Negligible.
Specific Gravity/Density:0.696 (Water=1)
Molecular Formula:CH3(CH2)5CH3
Molecular Weight:100.2

Section 10 - Stability and Reactivity

Chemical Stability: Stable under normal temperatures and pressures.
Conditions to Avoid: Ignition sources, excess heat.
Incompatibilities with Other Materials: Strong oxidizing agents.
Hazardous Decomposition Products: Carbon monoxide, carbon dioxide.
Hazardous Polymerization: Has not been reported.

Section 11 - Toxicological Information

RTECS#:
CAS# 142-82-5: MI7700000
CAS# 64-17-5: KQ6300000
CAS# 9006-04-6: VL8020000
LD50/LC50:
CAS# 142-82-5:
Inhalation, rat: LC50 = 103 gm/m3/4H;
.

CAS# 64-17-5:

Draize test, rabbit, eye: 500 mg Severe;
Draize test, rabbit, eye: 500 mg/24H Mild; 297
Draize test, rabbit, skin: 20 mg/24H Moderate;
Inhalation, mouse: LC50 = 39 gm/m3/4H;
Inhalation, rat: LC50 = 20000 ppm/10H;
Oral, mouse: LD50 = 3450 mg/kg;
Oral, rabbit: LD50 = 6300 mg/kg;
Oral, rat: LD50 = 7060 mg/kg;
Oral, rat: LD50 = 9000 mg/kg;
.

CAS# 9006-04-6:
.

Carcinogenicity:
CAS# 142-82-5: Not listed by ACGIH, IARC, NTP, or CA Prop 65.
CAS# 64-17-5: Not listed by ACGIH, IARC, NTP, or CA Prop 65.
CAS# 9006-04-6: Not listed by ACGIH, IARC, NTP, or CA Prop 65.

Epidemiology: No information found
Teratogenicity: No information found
Reproductive Effects: No information found
Mutagenicity: No information found
Neurotoxicity: No information found
Other Studies:

Section 12 - Ecological Information

Ecotoxicity: Fish: Goldfish: LC50 = 4.0 mg/L; 24 Hr.; UnspecifiedFish: Mosquito Fish: LC50 = 4900 mg/L; 24 Hr.; UnspecifiedFish: LC50 = 4900 mg/L; 24 Hr.; Unspecified No data available.
Environmental: Photolysis or hydrolysis of n-heptane are not expected to be important in soils. The biodegradation of n-heptane may occur in soils; however, volatilization and adsorption are expected to be far more important fate processes.
Physical: Based on a vapor pressure of 45.8 mm Hg at 25 deg C, n-heptane is expected to exist entirely in the vapor phase in ambient air. Direct photolysis of n-heptane in the atmosphere is not expected to be important.
Other: For more information, see "HANDBOOK OF ENVIRONMENTAL FATE AND EXPOSURE DATA."

Section 13 - Disposal Considerations

Chemical waste generators must determine whether a discarded chemical is classified as a hazardous waste. US EPA guidelines for the classification determination are listed in 40 CFR Parts 261.3. Additionally, waste generators must consult state and local hazardous waste regulations to ensure complete and accurate classification.
RCRA P-Series: None listed.
RCRA U-Series: None listed.

Section 14 - Transport Information

	US DOT	Canada TDG
Shipping Name:	CONSUMER COMMODITY	No information available.
Hazard Class:	ORM	
UN Number:		
Packing Group:		

Section 15 - Regulatory Information

US FEDERAL 298

TSCA

CAS# 142-82-5 is listed on the TSCA inventory.
CAS# 64-17-5 is listed on the TSCA inventory.
CAS# 9006-04-6 is not listed on the TSCA inventory. It is for research and development use only.

Health & Safety Reporting List

None of the chemicals are on the Health & Safety Reporting List.

Chemical Test Rules

CAS# 142-82-5: 40 CFR 799.5115

Section 12b

CAS# 142-82-5: Section 4

TSCA Significant New Use Rule

None of the chemicals in this material have a SNUR under TSCA.

CERCLA Hazardous Substances and corresponding RQs

None of the chemicals in this material have an RQ.

SARA Section 302 Extremely Hazardous Substances

None of the chemicals in this product have a TPQ.

SARA Codes

CAS # 142-82-5: immediate, delayed, fire.
CAS # 64-17-5: immediate, delayed, fire.

Section 313 No chemicals are reportable under Section 313.

Clean Air Act:

This material does not contain any hazardous air pollutants.
This material does not contain any Class 1 Ozone depletors.
This material does not contain any Class 2 Ozone depletors.

Clean Water Act:

None of the chemicals in this product are listed as Hazardous Substances under the CWA.
None of the chemicals in this product are listed as Priority Pollutants under the CWA.
None of the chemicals in this product are listed as Toxic Pollutants under the CWA.

OSHA:

None of the chemicals in this product are considered highly hazardous by OSHA.

STATE

CAS# 142-82-5 can be found on the following state right to know lists: California, New Jersey, Pennsylvania, Minnesota, Massachusetts.

CAS# 64-17-5 can be found on the following state right to know lists: California, New Jersey, Pennsylvania, Minnesota, Massachusetts.

CAS# 9006-04-6 can be found on the following state right to know lists: New Jersey.

California Prop 65

WARNING: This product contains Ethyl alcohol, a chemical known to the state of California to cause developmental reproductive toxicity.
California No Significant Risk Level: None of the chemicals in this product are listed.

European/International Regulations

European Labeling in Accordance with EC Directives

Hazard Symbols:

XN F N

Risk Phrases:

R 11 Highly flammable.
R 38 Irritating to skin.
R 50/53 Very toxic to aquatic organisms, may cause long-term adverse effects in the aquatic environment.
R 65 Harmful: may cause lung damage if swallowed.
R 67 Vapours may cause drowsiness and dizziness.

Safety Phrases:

S 16 Keep away from sources of ignition - No smoking.
S 29 Do not empty into drains.
S 33 Take precautionary measures against static discharges.
S 9 Keep container in a well-ventilated place.

S 60 This material and its container must be disposed of as hazardous waste.
S 61 Avoid release to the environment. Refer to special instructions /safety data sheets.

299

WGK (Water Danger/Protection)
CAS# 142-82-5: 1
CAS# 64-17-5: 0
CAS# 9006-04-6: No information available.

Canada - DSL/NDSL
CAS# 142-82-5 is listed on Canada's DSL List.
CAS# 64-17-5 is listed on Canada's DSL List.
CAS# 9006-04-6 is listed on Canada's DSL List.

Canada - WHMIS
This product has a WHMIS classification of B2, D2B.
This product has been classified in accordance with the hazard criteria of the Controlled Products Regulations and the MSDS contains all of the information required by those regulations.

Canadian Ingredient Disclosure List
CAS# 142-82-5 is listed on the Canadian Ingredient Disclosure List.
CAS# 64-17-5 is listed on the Canadian Ingredient Disclosure List.

Section 16 - Additional Information

MSDS Creation Date: 6/24/1999
Revision #9 Date: 3/15/2007

The information above is believed to be accurate and represents the best information currently available to us. However, we make no warranty of merchantability or any other warranty, express or implied, with respect to such information, and we assume no liability resulting from its use. Users should make their own investigations to determine the suitability of the information for their particular purposes. In no event shall Fisher be liable for any claims, losses, or damages of any third party or for lost profits or any special, indirect, incidental, consequential or exemplary damages, howsoever arising, even if Fisher has been advised of the possibility of such damages.

BECO CHEMICAL CO INC -- ISOPROPYL RUBBING ALCOHOL -- 6505-00-655-8366 300

========== Product Identification ==========

Product ID:ISOPROPYL RUBBING ALCOHOL
MSDS Date:01/01/1987
FSC:6505
NIIN:00-655-8366
MSDS Number: BHWBR
=== Responsible Party ===
Company Name:BECO CHEMICAL CO INC
Address:11865 S ALAMEDA ST
City:LYNWOOD
State:CA
ZIP:90262-4022
Country:US
Info Phone Num:213-567-2481
Emergency Phone Num:213-567-2481
CAGE:3R190
=== Contractor Identification ===
Company Name:BECO CHEMICAL CO INC
Address:11865 S ALAMEDA ST
Box:City:LYNWOOD
State:CA
ZIP:90262-4022
Country:US
Phone:213-567-2481
CAGE:3R190

========== Composition/Information on Ingredients ==========

Ingred Name:ISOPROPYL ALCOHOL (SARA III)
CAS:67-63-0
RTECS #:NT8050000
= Wt:70.
OSHA PEL:400 PPM/500 STEL
ACGIH TLV:400 PPM/500STEL;9192

Ingred Name:WATER
CAS:7732-18-5
RTECS #:ZC0110000
= Wt:30.

Hazards Identification

301

LD50 LC50 Mixture:ORAL LD50 (RAT) = 5840 MG/KG
Routes of Entry: Inhalation:YES Skin:NO Ingestion:YES
Reports of Carcinogenicity:NTP:NO IARC:NO OSHA:NO
Health Hazards Acute and Chronic:PRODUCT IS MILDLY IRRITATING. IT IS TOXIC BY INGESTION, EFFECTING THE CENTRAL NERVOUS SYSTEM. INHALED IN LARGE QUANTITY IT PRODUCES AN ANESTHETIC EFFECT.
Explanation of Carcinogenicity:THIS CHEMICAL IS NOT LISTED AS HAVING ANY EVIDENCE OF BEING CARCINOGENIC.
Effects of Overexposure:EYE:IRRITATION. SKIN:MILD IRRITATION,DRYING,POSSIBLE DERMATITIS. INHALED:DIZZINESS,HEADACHE,CENTRAL NERVOUS SYSTEM DEPRESSION,ANESTHESIA. INGESTED:CENTRAL NERVOUS SYSTEM DEPRESSION,NAUSEA,VOMITING.
Medical Cond Aggravated by Exposure:PERSONS WITH SKIN, HEART, RESPIRATORY, OR ANY OTHER MEDICAL CONDITION SHOULD USE CAUTION WHEN HANDLING OR USING THIS PRODUCT.

First Aid Measures

First Aid:EYE:FLUSH W/WATER 15 MIN, HOLD LIDS OPEN. SKIN:REMOVE CONTAMINATED CLOTHING AND LAUNDER BEFORE REUSE. WASH WITH SOAP & WATER. INHALED:REMOVE TO FRESH AIR. RESTORE BREATHING AS NEEDED. INGESTED:GIVE 2 LARGE GLASSES OF MILK OR WATER AND IMMEDIATELY INDUCE VOMITING. GIVE NOTHING BY MOUTH IF UNCONSCIOUS. GET IMMEDIATE MEDICAL CARE.

Fire Fighting Measures

Flash Point Method:CC
Flash Point:=11.7C, 53.F
Extinguishing Media:USE CARBON DIOXIDE, FOAM, DRY CHEMICAL, OR WATER FOG.
Fire Fighting Procedures:FIRE FIGHTERS SHOULD USE NIOSH APPROVED SCBA & FULL PROTECTIVE EQUIPMENT WHEN FIGHTING CHEMICAL FIRE. USE WATER SPRAY TO COOL NEARBY CONTAINERS EXPOSED TO FIRE.
Unusual Fire/Explosion Hazard:FIRE OR EXCESSIVE HEAT MAY CAUSE PRODUCTION OF HAZARDOUS DECOMPOSITION PRODUCTS.

Accidental Release Measures

Spill Release Procedures:ABSORB MATERIAL WITH CLAY, VERMICULITE, OR

SIMILAR ABSORBENT MATERIAL. PLACE IN DISPOSAL CONTAINERS. FLUSH RESIDUE WITH WATER.

302

Neutralizing Agent:NONE SPECIFIED BY MANUFACTURER.

========== Handling and Storage ==========

Handling and Storage Precautions:STORE IN A COOL, WELL VENTILATED FLAMMABLE LIQUID STORAGE AREA. KEEP CONTAINERS CLOSED WHEN NOT IN USE. AVOID OPEN ELECTRICAL ITEMS IN HIGH VAPOR AREA

Other Precautions:'EMPTY' CONTAINERS MAY CONTAIN RESIDUE OR VAPOR. TREAT THEM WITH THE RESPECT DUE FULL ONES. DO NOT CUT,WELD,ETC. ON THEM.DO NOT USE PRESSURE TO DISPENSE LIQUID. GROUND CONTAINERS WHEN TRANSFERRING LI QUID.

========== Exposure Controls/Personal Protection ==========

Respiratory Protection:RESPIRATOR WILL NOT NORMALLY BE NECESSARY. USE NIOSH/MSHA APPROVED AIR SUPPLIED RESPIRATOR OR RESPIRATOR FOR ORGANIC VAPORS IF EXPOSURE IS ABOVE THE TLV/PEL. SEE 29 CFR 1910.134 FOR REGULATIONS PERTA ININGTO RESPIRATOR USE.

Ventilation:NORMAL ROOM VENTILATION IS OFTEN SUFFICIENT. SUPPLEMENT WITH LOCAL EXHAUST IF PEL/TLV IS EXCEEDED.

Protective Gloves:NEOPRENE, NITRILE, OR POLYVINYL ALCOHOL

Eye Protection:USE CHEMICAL SAFETY GOGGLES & FACESHIELD

Other Protective Equipment:EYE WASH STATION & SAFETY SHOWER. WORK CLOTHING AS NECESSARY TO PREVENT PROLONGED/REPEATED CONTACT.

Work Hygienic Practices:USE GOOD CHEMICAL HYGIENE PRACTICE. AVOID UNNECESSARY CONTACT.

Supplemental Safety and Health

NONE

========== Physical/Chemical Properties ==========

HCC:F2

Vapor Pres:33.0 MM

Vapor Density:2.1

Spec Gravity:<1

pH:UNKNON

Solubility in Water:COMPLETE

Appearance and Odor:CLEAR COLORLESS LIQUID, ALCOHOL ODOR

Percent Volatiles by Volume:100

========== Stability and Reactivity Data ==========

Stability Indicator/Materials to Avoid:YES
STRONG OXIDIZING AGENTS
Stability Condition to Avoid:HIGH TEMPERATURES, SPARKS, AND OPEN FLAMES
Hazardous Decomposition Products:CARBON DIOXIDE, CARBON MONOXIDE

========== Disposal Considerations ==========

Waste Disposal Methods:DISPOSE I/A/W LOCAL, STATE AND FEDERAL REGULATIONS. INCINERATION IS RECOMMENDED.

M A T E R I A L S A F E T Y D A T A S H E E T Rev 07900.05B

For Coating, Resins, and Related Materials NPCA 1-84

MANUFACTURER'S NAME
BENJAMIN MOORE & Co.
51 CHESTNUT RIDGE RD.
MONTVALE, NJ 07645

EMERGENCY TELEPHONE NO.
800-424-9300 (CHEMTREC)

DATE OF PREPARATION
02-MAY-97 (Sup. 23-AUG-96)

INFORMATION TELEPHONE
201-573-9600

SECTION I - PRODUCT ID

	HMIS CODE	SARA TITLE 312
PRODUCT CODE: 079		Acute: YES
CLASS: SOLVENT THINNED PAINT	Health: 2*	Chronic: YES
NAME: MOORWOOD DECK STAIN	Flammability: 2	Fire: YES
COLOR: ALL	Reactivity: 0	Pressure: NO
	Personal Prot.: G	React: NO

SECTION II - HAZARDOUS INGREDIENTS

INGREDIENT	MAX PCT	CAS NO. / TLV	PEL	STEL	CEIL	MM Hg	TEMP
Stoddard Solvent (fn)	79.5	8052413 / 100ppm	100ppm			2.0	@ 20 C
1,2,4-Trimethylbenzene (f3n)	1.5	95636 / 25ppm	25ppm			N/A	
Bentonite Clay (f*)	1.8	121888662 / 0.1mg/m3	N/E			N/A	
Titanium Dioxide (f*n)	3.5	13463677 / 10mg/m3	10mg/m3			N/A	
Talc (f*n)	8.4	14807966 / 2mg/m3	2mg/m3			N/A	
Carbon Black (f*n)	0.1	1333864 / 3.5mg/m3	3.5mg/m3			N/A	
Methyl Ethyl Ketoxime (f)	0.1	96297 / .1ppm	N/E			2.0	@ 68 F
C.I. Yellow 77492 (f*)	1.1	51274001 / 10mg/m3	10mg/m3			N/A	

f Federal Hazard List

* Hazardous only as dust when product is sanded.
3 Sect. 313 of the Emergency Planning & Community Right-To-Know Act of 1986 and of 40 CFR 37
n New Jersey Label Law hazardous chemical

This product may contain small amounts of materials known to the State of California to cause cancer and reproductive harm.

SECTION III - PHYSICAL DATA

BOILING RANGE: 313- 388 F VAPOR DENSITY: HEAVIER THAN AIR
WEIGHT PER GAL: 6.8 - 7.7

EVAPORATION RATE: SLOWER THAN ETHER % VOLATILE VOLUME: 77.5 - 84.3

SECTION IV - FIRE AND EXPLOSION HAZARD DATA

D.O.T. FLAMMABILITY CLASSIFICATION: COMBUSTIBLE FLASH PT.: 107 F PMCC

LEL: 1.0%

EXTINGUISHING MEDIA: FOAM CO_2 DRY CHEMICAL WATER FOG

UNUSUAL FIRE AND EXPLOSION HAZARDS:
Closed containers may burst if exposed to extreme heat or fire.
Toxic gases may form when product burns.

SPECIAL FIREFIGHTING PROCEDURES:
Do not use water stream on burning liquid.
Cool exposed containers with water. Use self-contained breathing apparatus.

SECTION V - HEALTH HAZARD DATA

EFFECTS OF OVEREXPOSURE - ACUTE:
Inhalation - Harmful if inhaled. May affect the brain or nervous system, causing dizziness, headache or nausea.

Contact - Causes eye irritation.
Contact - Causes skin irritation.
Ingestion - Irritation of the digestive tract and nervous system depression (drowsiness, dizziness, loss of coordination and fatigue). Aspiration Hazard - This material can enter lungs during swallowing or vomiting and cause lung inflammation and damage.

EFFECTS OF OVEREXPOSURE - CHRONIC:
Skin Contact - Prolonged or repeated exposure may cause dermititis. 306
Inhalation statement: Sanding dust inhalation may cause lung damage. Contains Methyl Ethyl Ketoxime (MEKO) which has been identified as a potential animal liver carcinogen. Currently, MEKO is not listed as a potential carcinogen by IARC, NTP, or OSHA. IARC has classified Carbon Black as possibly carcinogenic for humans (2B). NOTICE: Reports have associated permanent brain and nervous system damage with repeated, prolonged overexposure to solvents among persons engaged in the painting trade. Intentional misuse by deliberately concentrating and inhaling the contents may be harmful or fatal.
MEDICAL CONDITIONS PRONE TO AGGRAVATION BY EXPOSURE:
None expected when used in accordance with Safe Handling and Use Information (Section VIII).
PRIMARY ROUTE(S) OF ENTRY: DERMAL INHALATION INGESTION

EMERGENCY AND FIRST AID PROCEDURES:
Inhalation - Remove from hazard area, maintain breathing, call physician.
Skin Contact - Remove with soap and water.
Eye Contact - Flush immediately with large amounts of water. Call physician.
Ingestion - Drink 1 or 2 glasses of water to dilute. Do NOT induce vomiting. Call physician.

SECTION VI - REACTIVITY DATA

STABILITY: STABLE HAZARDOUS POLYMERIZATION WILL NOT OCCUR

HAZARDOUS DECOMPOSITION PRODUCTS: Burning may produce carbon dioxide and carbon monoxide.
CONDITIONS TO AVOID: Elevated temperatures and build up of vapors.

INCOMPATIBILITY (MATERIALS TO AVOID): None reasonably foreseeable.

SECTION VII - SPILL OR LEAK PROCEDURES

STEPS TO BE TAKEN IN CASE MATERIAL IS RELEASED OR SPILLED: Remove all sources of ignition. Avoid breathing vapors. Use non-sparking tools to return materials to container. Absorb residue with Fuller's earth.

WASTE DISPOSAL METHOD: Conventional procedures in compliance with local, state and federal regulations. Do not incinerate sealed containers.

SECTION VIII - SAFE HANDLING AND USE INFORMATION

RESPIRATORY PROTECTION: Use NIOSH approved respirator specified for

protection against paint spray mist, sanding dust and organic vapors in restricted or confined areas.
307
VENTILATION: Adequate to maintain working atmosphere below T.L.V. and L.E.L. (See Sect. II for ingredient data and concentrations). Mechanical exhaust may be required in confined areas. Discharge exhaust only in area away from ignition sources.
PROTECTIVE GLOVES: Solvent impermeable gloves are required during repeated contact.
EYE PROTECTION: Splash goggles or safety glasses with side shields.

OTHER PROTECTIVE EQUIPMENT: Clothing adequate to protect skin.

HYGIENIC PRACTICES: Remove and wash clothing before reuse. Wash hands before eating, smoking or using the washroom.

==========

SECTION IX - SPECIAL PRECAUTIONS

==========

PRECAUTIONS TO BE TAKEN IN HANDLING AND STORAGE: Combustible - Keep away from heat and flame.
OTHER PRECAUTIONS: Use only with adequate ventilation. Avoid prolonged contact with skin and breathing of vapor spray mist or sanding dust. Close container after each use. Keep out of reach of children. Do not take internally.

M A T E R I A L S A F E T Y D A T A S H E E T Rev 10500.06B

For Coating, Resins, and Related Materials NPCA 1-84

MANUFACTURER'S NAME
BENJAMIN MOORE & Co.
51 CHESTNUT RIDGE RD.
MONTVALE, NJ 07645

EMERGENCY TELEPHONE NO.
800-424-9300 (CHEMTREC)

DATE OF PREPARATION
15-DEC-97 (SUP. 02-MAY-97)

INFORMATION TELEPHONE
201-573-9600

SECTION I - PRODUCT ID

	HMIS CODE	SARA TITLE 312	
PRODUCT CODE: 105		Acute:	NO
CLASS: WATER THINNED PAINT	Health: 1*	Chronic:	YES
NAME: MOORLIFE LATEX HOUSE PAINT	Flammability: 0	Fire:	NO
COLOR: ALL	Reactivity: 0	Pressure:	NO
	Personal Prot.:	React:	NO

For a complete description of HMIS and an explanation of the PERSONAL PROT: code, see Section XX.

SECTION II - HAZARDOUS INGREDIENTS

INGREDIENT	MAX PCT	CAS NO. / TLV	PEL	STEL	CEIL	MM Hg	TEMP
Zinc Oxide (f*3n)	2.2	1314132					
		10mg/m3	10mg/m3	N/E	N/E	N/A	
Titanium Dioxide (f*)	21.2	13463677					
		10mg/m3	10mg/m3	N/E	N/E	N/A	
Talc (f*n)	24.1	14807966					
		2mg/m3	2mg/m3	N/E	N/E	N/A	
Silica, Crystalline (f*n)	3.8	14808607					
		0.1mg/m3	0.1mg/m3	N/E	N/E	N/A	
Kaolin (f*)	4.4	66402684					
		30mg/m3	N/E	N/E	N/E	N/A	
Iron Oxide (f*n)	10.2	1332372					
		5mg/m3	10mg/m3	N/E	N/E	N/A	
Hydrous Alum Silicates (f*)	3.4	1332587					
		10mg/m3	10mg/m3	N/E	N/E	N/A	

Carbon Black (f*n)	0.4	1333864					
		3.5mg/m3	3.5mg/m3	N/E	N/E	309	N/A
C.I. Pigment Yellow 42 (f*)	4.6	51274001					
		10mg/m3	10mg/m3	10ppm	N/E		N/A
Diatomaceous Earth (f*n)	3.3	61790532					
		10mg/m3	5mg/m3	N/E	N/E		N/A

f Federal Hazard List
* Hazardous only as dust when product is sanded.
3 Sect. 313 of the Emergency Planning & Community Right-To-Know Act of 1986 and of 40 CFR 37
n New Jersey Label Law hazardous chemical

This product may contain small amounts of materials known to the State of California to cause cancer and reproductive harm.

SECTION III - PHYSICAL DATA

BOILING RANGE: N/A VAPOR DENSITY: HEAVIER THAN AIR
WEIGHT PER GAL: 10.5 - 11.9

EVAPORATION RATE: SLOWER THAN ETHER % VOLATILE VOLUME: 57.7 - 70.0

SECTION IV - FIRE AND EXPLOSION HAZARD DATA

FLAMMABILITY CLASSIFICATION: NOT REGULATED FLASH PT.: >250 F PMCC

LEL: Not Applicable

EXTINGUISHING MEDIA: FOAM CO2 DRY CHEMICAL WATER FOG

UNUSUAL FIRE AND EXPLOSION HAZARDS:
Closed containers may burst if exposed to extreme heat or fire.
Toxic gases may form when product burns.

SPECIAL FIREFIGHTING PROCEDURES:
Cool exposed containers with water. Use self-contained breathing apparatus.

SECTION V - HEALTH HAZARD DATA

EFFECTS OF OVEREXPOSURE - ACUTE:
Inhalation - Causes nose and throat irritation.
Inhalation - Causes lung irritation.

Contact - Causes eye irritation.
Contact - Causes skin irritation.
Ingestion of large amounts could cause serious injury.

310

EFFECTS OF OVEREXPOSURE - CHRONIC:
Inhalation statement: Sanding dust inhalation may cause lung damage. Contains: Crystalline Silica which has been determined to be carcinogenic to humans (1) by IARC when in respirable form. Risk of cancer depends on duration and level of inhalation exposure to dust from sanding the dried paint and spray mist. IARC has classified Carbon Black as possibly carcinogenic for humans (2B).

MEDICAL CONDITIONS PRONE TO AGGRAVATION BY EXPOSURE:
None expected when used in accordance with Safe Handling and Use Information (Section VIII).
PRIMARY ROUTE(S) OF ENTRY: DERMAL INHALATION INGESTION

EMERGENCY AND FIRST AID PROCEDURES:
Inhalation - Remove to fresh air. Get medical help for any breathing difficulty. Eye Contact - Flush thoroughly with water. Call physician.
Skin Contact - Wash with soap and water.
Ingestion - Drink 1 or 2 glasses of water to dilute. Do NOT induce vomiting. Call physician.

SECTION VI - REACTIVITY DATA

STABILITY: STABLE HAZARDOUS POLYMERIZATION WILL NOT OCCUR

CONDITIONS TO AVOID: Elevated temperatures

HAZARDOUS DECOMPOSITION PRODUCTS:
Burning may produce carbon dioxide and carbon monoxide.

INCOMPATIBILITY (MATERIALS TO AVOID): None reasonably foreseeable.

SECTION VII - SPILL OR LEAK PROCEDURES

STEPS TO BE TAKEN IN CASE MATERIAL IS RELEASED OR SPILLED:
Flush with water. Absorb with sawdust or rags.

WASTE DISPOSAL METHOD:
Conventional procedures in compliance with local, state and federal regulations. Do not incinerate sealed containers.

SECTION VIII - SAFE HANDLING AND USE INFORMATION

311

RESPIRATORY PROTECTION:
Use NIOSH approved respirator specified for protection against paint spray mist and sanding dust in restricted or confined areas.

VENTILATION:
Adequate to maintain working atmosphere below T.L.V. and L.E.L. (See Sect. II for ingredient data and concentrations). Mechanical exhaust may be required in confined areas.
PROTECTIVE GLOVES: Waterproof during repeated contact.

EYE PROTECTION: Splash goggles or safety glasses with side shields.

OTHER PROTECTIVE EQUIPMENT: Clothing adequate to protect skin.

HYGIENIC PRACTICES:
Remove and wash clothing before reuse. Wash hands before eating, smoking or using the washroom.

==========

SECTION IX - SPECIAL PRECAUTIONS

==========

PRECAUTIONS TO BE TAKEN IN HANDLING AND STORAGE:
Do not throw or drop containers.

OTHER PRECAUTIONS:
Avoid contact with eyes and prolonged contact with skin or breathing of spray mist or sanding dust.
Close container after each use. Keep out of reach of children. Do not take internally.

==========

SECTION XX

==========

HMIS (Hazardous Materials Identification System) (R) NPCA

HMIS is a recognized workplace Hazardous Communication System as required by OSHA (40 CFR 1910.1200). Information on establishing a complaint hazardous communication program using HMIS is available from:

American Labelmark Co., Inc., Labelmaster Division
5724 N. Pulaski Rd., Chicago, IL 60646
1-800-621-5808

The ratings assigned by Benjamin Mo0re & Co. are only suggested ratings; the contractor/employer has ultimate resonsibility for HMIS rating where this system is used.

PERSONAL PROTECTION: This code is left blank on Benjamin Moore & Co.