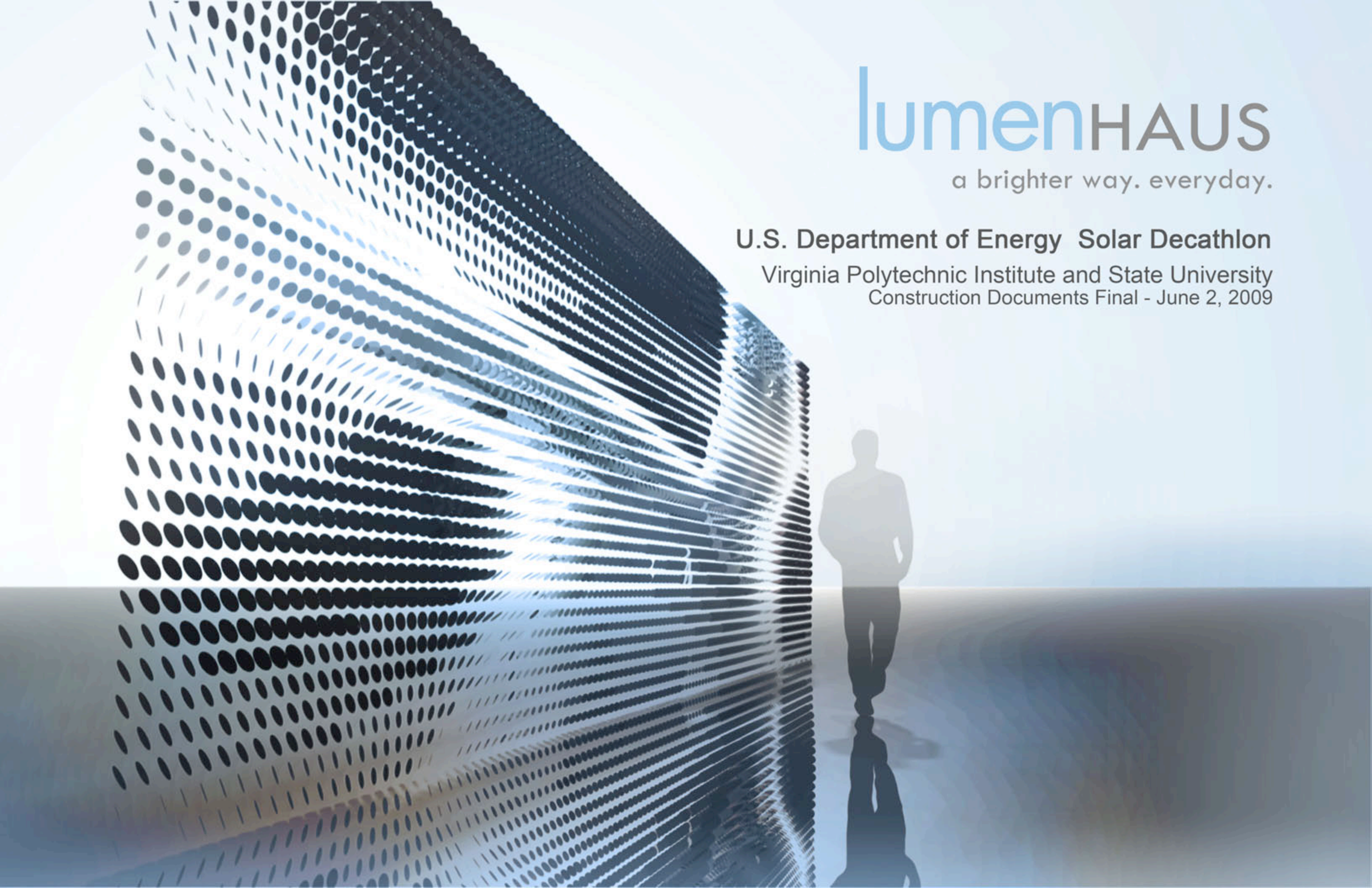

lumenHAUS

a brighter way. everyday.

U.S. Department of Energy Solar Decathlon

Virginia Polytechnic Institute and State University

Construction Documents Final - June 2, 2009

DRAWING INDEX

GENERAL

G-001	SHEET LIST
G-101	TARGET MARKET DESCRIPTION
G-901	EXTERIOR RENDERING
G-902	EXTERIOR RENDERING
G-903	AERIAL RENDERING

LANDSCAPE

L-104	PLANTING PLAN
L-601	SCHEDULE

STRUCTURAL

S-111	FIRST FLOOR STRUCTURAL PLAN
S-112	ROOF FRAMING PLAN
S-311	STRUCTURAL LONGITUDINAL SECTION
S-312	STRUCTURAL TRANSVERSE SECTION
S-511	SECTION DETAIL

ARCHITECTURAL

A-101	SITE PLAN
A-111	FLOOR PLAN
A-112	ROOF PLAN
A-112A	ROOF PLAN - PHOTOVOLTAIC FRAME
A-113	PLAN CONFIGURATIONS - OPERATION SCENARIOS
A-114	SHADING PLAN
A-115	FOOTPRINT AREA PLAN
A-116	CONDITIONED SPACE PLAN
A-117	REFLECTED CEILING PLAN
A-118	MATERIAL PLAN
A-201	NORTH/SOUTH SITE ELEVATION
A-202	EAST/WEST SITE ELEVATION
A-211	NORTH BUILDING ELEVATION
A-212	SOUTH BUILDING ELEVATION
A-213	EAST BUILDING ELEVATION
A-214	WEST BUILDING ELEVATION
A-311	BUILDING SECTION @ DINING
A-312	BUILDING SECTION @ BATHROOM
A-313	BUILDING SECTION @ BEDROOM
A-314	LONGITUDINAL BUILDING SECTION
A-315	WALL SECTION
A-316	WALL SECTION
A-317	WALL SECTION
A-511	WINDOW DETAIL
A-512	DOOR DETAIL
A-513	DOOR DETAIL
A-514	DOOR DETAIL
A-520	PLAN DETAIL
A-521	PLAN DETAIL
A-522	PLAN DETAIL
A-530	SECTION DETAIL
A-531	SECTION DETAIL
A-532	SECTION DETAIL
A-533	SECTION DETAIL
A-534	ROOF DETAIL
A-601	SCHEDULE
A-602	SCHEDULE

INTERIORS

I-131	BATHROOM FLOOR PLAN
I-201	LIVING SPACE ELEVATION
I-202	LIVING SPACE ELEVATION
I-211	KITCHEN ELEVATION
I-212	KITCHEN DIAGRAM
I-221	OFFICE ELEVATION
I-231	BATHROOM ELEVATION
I-232	BATHROOM ELEVATION
I-241	OFFICE ELEVATION
I-901	INTERIOR RENDERINGS

PLUMBING

P-101	SUPPLY AND REMOVAL PLAN
P-601	SCHEMATIC RISER DIAGRAM
P-602	SCHEDULE

MECHANICAL

M-102	HVAC DISTRIBUTION PLAN
M-103	RADIANT FLOOR HEATING PLAN
M-201	MECHANICAL ROOM ELEVATION
M-601	HVAC SYSTEMS SCHEMATIC DIAGRAM
M-611	HVAC EQUIPMENT SCHEDULE
M-612	HVAC DISTRIBUTION SCHEDULE

ELECTRICAL

E-102	PV WIRING PLAN
E-103	POWER/RECEPTACLE PLAN
E-104	LIGHTING PLAN
E-201	ELECTRICAL ROOM ELEVATION
E-601	THREE-LINE DIAGRAM
E-604	SCHEDULE
E-605	SCHEDULE
E-606	SCHEDULE

TELECOMMUNICATIONS

T-601	SCHEMATIC DIAGRAM

OTHER DISCIPLINES

X-103	PUBLIC EXHIBIT PLAN
X-201	PUBLIC COMMUNICATION MATERIALS

OPERATIONS

O-101	ARRIVAL SEQUENCE
O-102	ASSEMBLY SEQUENCE
O-103	DEPARTURE SEQUENCE

lumenHAUS
a brighter way. everyday.

Virginia Tech **Solar Decathlon 2009**
Virginia Polytechnic Institute and State University
www.lumenhaus.com

Mark	Date	Description
CD	06.02.09	Final Submission
4	04.17.09	Clarification #2
3	03.27.09	Clarification #1
DD	02.20.09	Design Development

Solar Decathlon	2009
Date:	06.02.09
Drawn:	CEM + OO
Approved:	JHW

SHEET LIST

G-001

Market I.D. Parameter	
Location	Washington D.C. metropolitan area
Housing type	Single-family, detached house
# of occupants	Two adults
Occupants demographic	Generation Y (25 - 30 year olds)
	Baby Boomers (55 - 70 year olds)
Homeowner annual income	125K (double income couple)
# of bedrooms	one

lumenHAUS
a brighter way. everyday.

Virginia Tech **Solar Decathlon 2009**
Virginia Polytechnic Institute and State University
www.lumenhaus.com

Mark	Date	Description
CD	06.02.09	Final Submission
4	04.17.09	Clarification #2
3	03.27.09	Clarification #1
DD	02.20.09	Design Development

Solar Decathlon 2009
Date: 06.02.09
Drawn: CEM + OO
Approved: JHW

TARGET MARKET DESCRIPTION
G-101

1
G-901
EXTERIOR RENDERING

lumenHAUS
a brighter way. everyday.

Virginia Tech **Solar Decathlon 2009**
Virginia Polytechnic Institute and State University
www.lumenhaus.com

Mark	Date	Description
CD	06.02.09	Final Submission
4	04.17.09	Clarification #2
3	03.27.09	Clarification #1
DD	02.20.09	Design Development

Solar Decathlon	2009
Date:	06.02.09
Drawn:	CEM + OO
Approved:	JHW

EXTERIOR RENDERINGS
G-901

1
G-902

EXTERIOR RENDERING

lumenHAUS
a brighter way. everyday.

Virginia Tech **Solar Decathlon 2009**
Virginia Polytechnic Institute and State University
www.lumenhaus.com

Mark	Date	Description
CD	06.02.09	Final Submission
4	04.17.09	Clarification #2
3	03.27.09	Clarification #1
DD	02.20.09	Design Development

Solar Decathlon	2009
Date:	06.02.09
Drawn:	CEM + OO
Approved:	JHW

EXTERIOR RENDERING

G-902

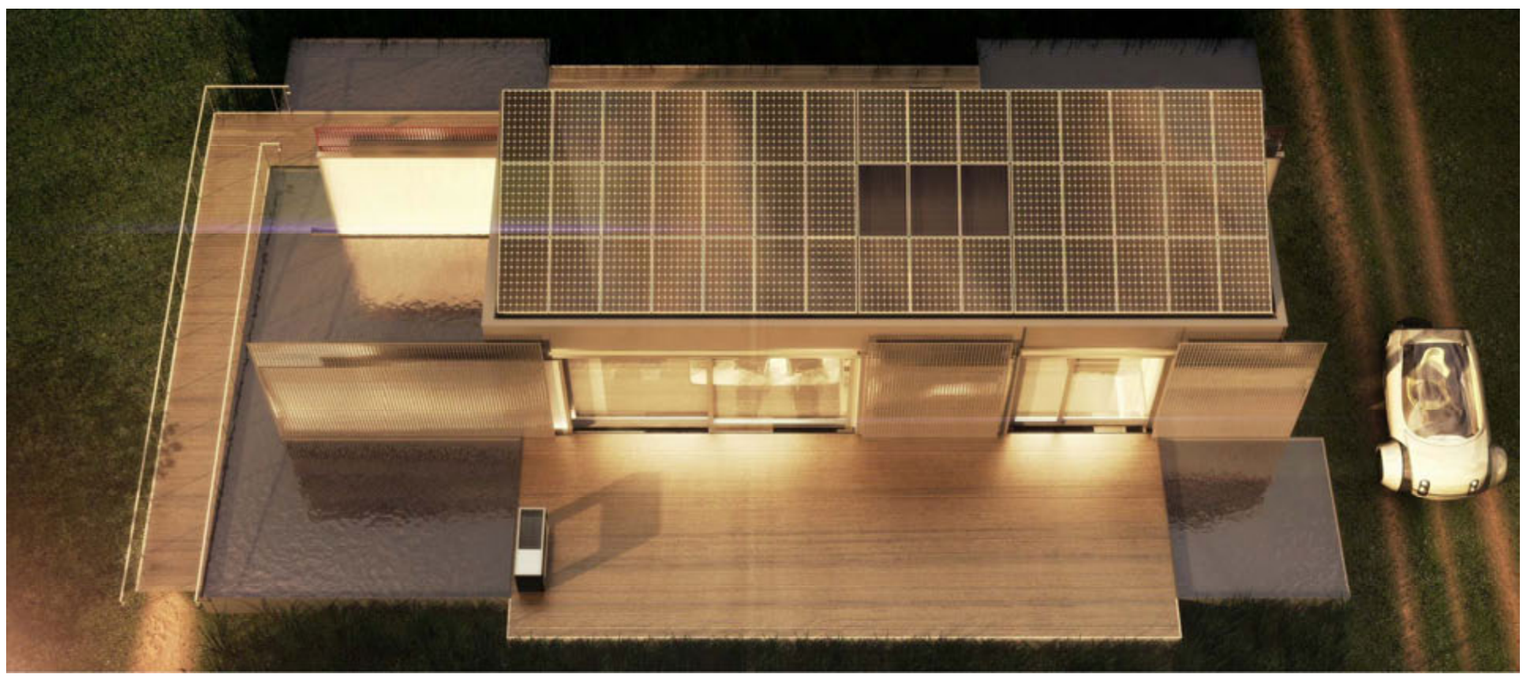

1
G-903

AERIAL RENDERING

lumenHAUS
a brighter way. everyday.

Virginia Tech **Solar Decathlon 2009**
Virginia Polytechnic Institute and State University
www.lumenhaus.com

Mark	Date	Description
CD	06.02.09	Final Submission
Δ	04.17.09	Clarification #2
Δ	03.27.09	Clarification #1
DD	02.20.09	Design Development

Solar Decathlon	2009
Date:	06.02.09
Drawn:	CEM + OO
Approved:	JHW

EXTERIOR RENDERING

G-903

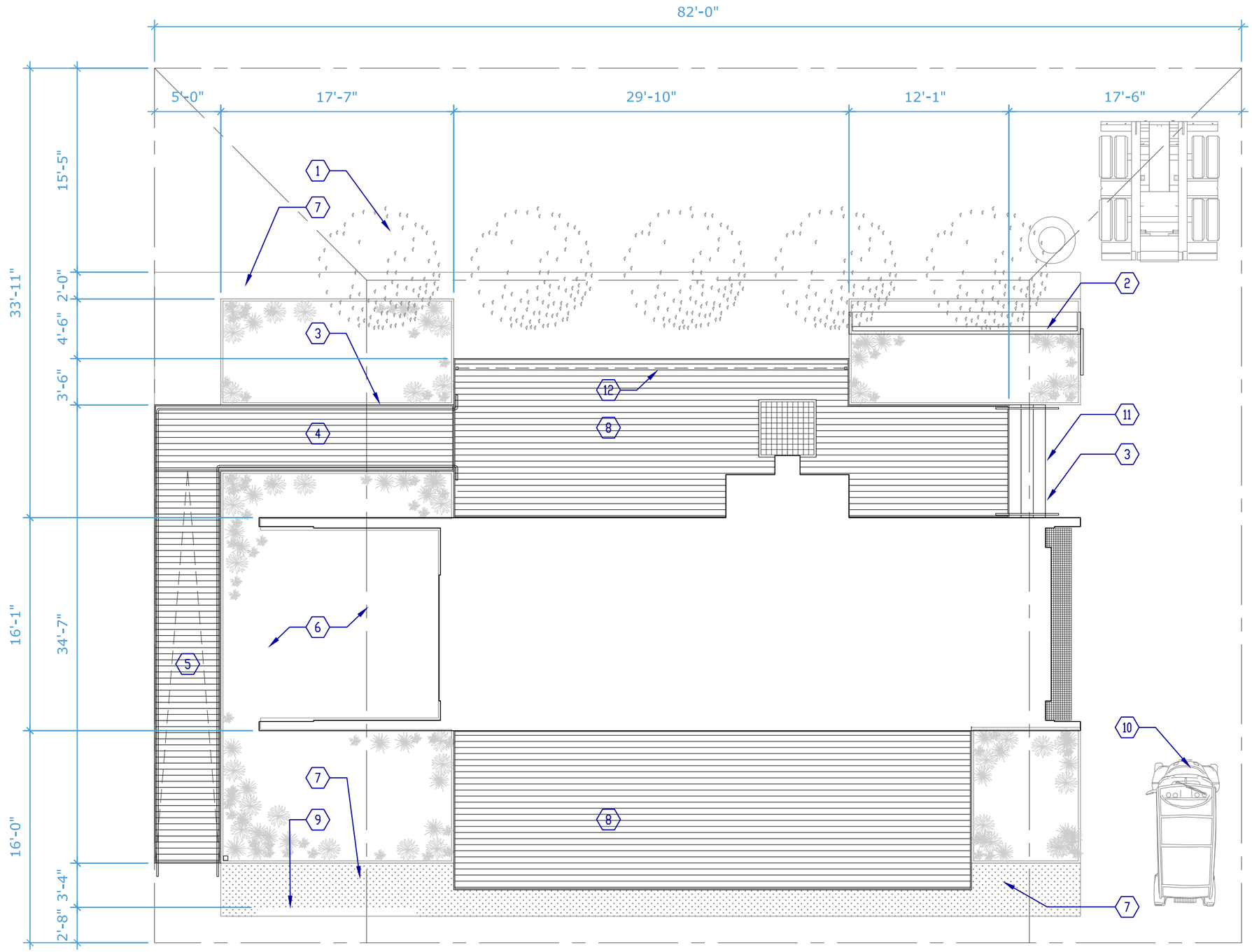

1 L-104 PLANTING PLAN

SCALE: 1/8" = 1'-0"

0 10 20 30

SHEET KEYNOTES

1. TREES
2. SIMULATED GEOTHERMAL TROUGH/WATER COOLING WALL WITH SHADE SCREEN
3. STEEL HANDRAIL
4. BRIDGE
5. RAMP SLOPE 1:12
6. WETLANDS GREYWATER FILTRATION SYSTEM
7. NATIVE GRASSES
8. WOOD DECK
9. SIGNAGE
10. AUTONOMOUS VEHICLE EXHIBIT
11. STEPS: 6" RISER/11" TREAD
12. LAUNDRY LINE

*FOR PLANT LISTINGS SCATTERED THROUGHOUT THE SITE, SEE L-601

LANDSCAPING

PLANTS SELECTED FOR STORM AND DRAINWATER MANAGEMENT

GREY WATER RECYCLING

CREATES REFLECTING POOL BETWEEN EXTENDED SUN SCREENS

lumenHAUS a brighter way. everyday.

Virginia Tech **Solar Decathlon 2009**

Virginia Polytechnic Institute and State University

www.lumenhaus.com

Mark	Date	Description
CD	06.02.09	Final Submission
Δ	04.17.09	Clarification #2
Δ	03.27.09	Clarification #1
DD	02.20.09	Design Development

Solar Decathlon	2009
Date:	06.02.09
Drawn:	CEM + 00
Approved:	JHW

PLANTING PLAN

L-104

PLANT SCHEDULE (HYDROPONIC)

#	LATIN NAME	COMMON NAME	SIZE	GROWING CONDITION
80	Cladium jamaicense	Saw grass	6" pots	Container grown
25	Iris pseudacorus	Yellow Iris	4" pots	Container grown
25	Irus versicolor	Blue Iris	4" pots	Container grown
75	Juncus effusus	soft rush	6"pots	Container grown
50	Leersia oryzoides	rice cut grass	6"pots	Container grown
50	Typha latifolia	wideleaf cattail	12"pot	Container grown
50	Typha angustifolia	narrow leaf cattail	12"pot	Container grown
50	Azolla caroliniana	water fern	clumps	bare root in water
100	Eichhormia crassipes	water hyacinth	clumps	bare root in water
100	Pistia stratiotes	water lettice	clumps	bareroot in water

PLANT SCHEDULE (TERESTRIAL)

#	LATIN NAME	COMMON NAME	SIZE	GROWING CONDITION
4	Quercus phallos	Willow oak	3" Cal	Container
1	Acer palmatum	Japanese maple (maron)	6'	20 gal container
20	Chrysanthemum Pompom	Orange pompom mums	8" pots	orange sept. bloom

PLANT SCHEDULE (GROUND COVER)

#	LATIN NAME	COMMON NAME	SIZE	GROWING CONDITION
100	Festuca glauca 'Elijah Blue' Blue	Blue Fescue	4"pot	Container grown
150	Mulhenbergia capillaris	Mully Grass	12"pot	Container grown
200	Panicum virgantum	Switchgrass	2gal can	Container grown
150	Schizacharium scoparium	Little Bluestem	12"pot	Container grown
200	Sedum Spp.	Sedum	4"pot	Container grown

lumenHAUS
a brighter way. everyday.

Virginia Tech **Solar Decathlon 2009**
Virginia Polytechnic Institute and State University
www.lumenhaus.com

Mark	Date	Description
CD	06.02.09	Final Submission
4	04.17.09	Clarification #2
3	03.27.09	Clarification #1
DD	02.20.09	Design Development

Solar Decathlon	2009
Date:	06.02.09
Drawn:	CEM + OO
Approved:	JHW

SCHEDULES

L-601

*NOTE: THESE DRAWIONGS NAD CALCULATIONS WERE APPROVED AND STAMPED IN THE LAST SUBMITTAL ON DECEMBER 13, 2008 BY ARUP ENGINEERS

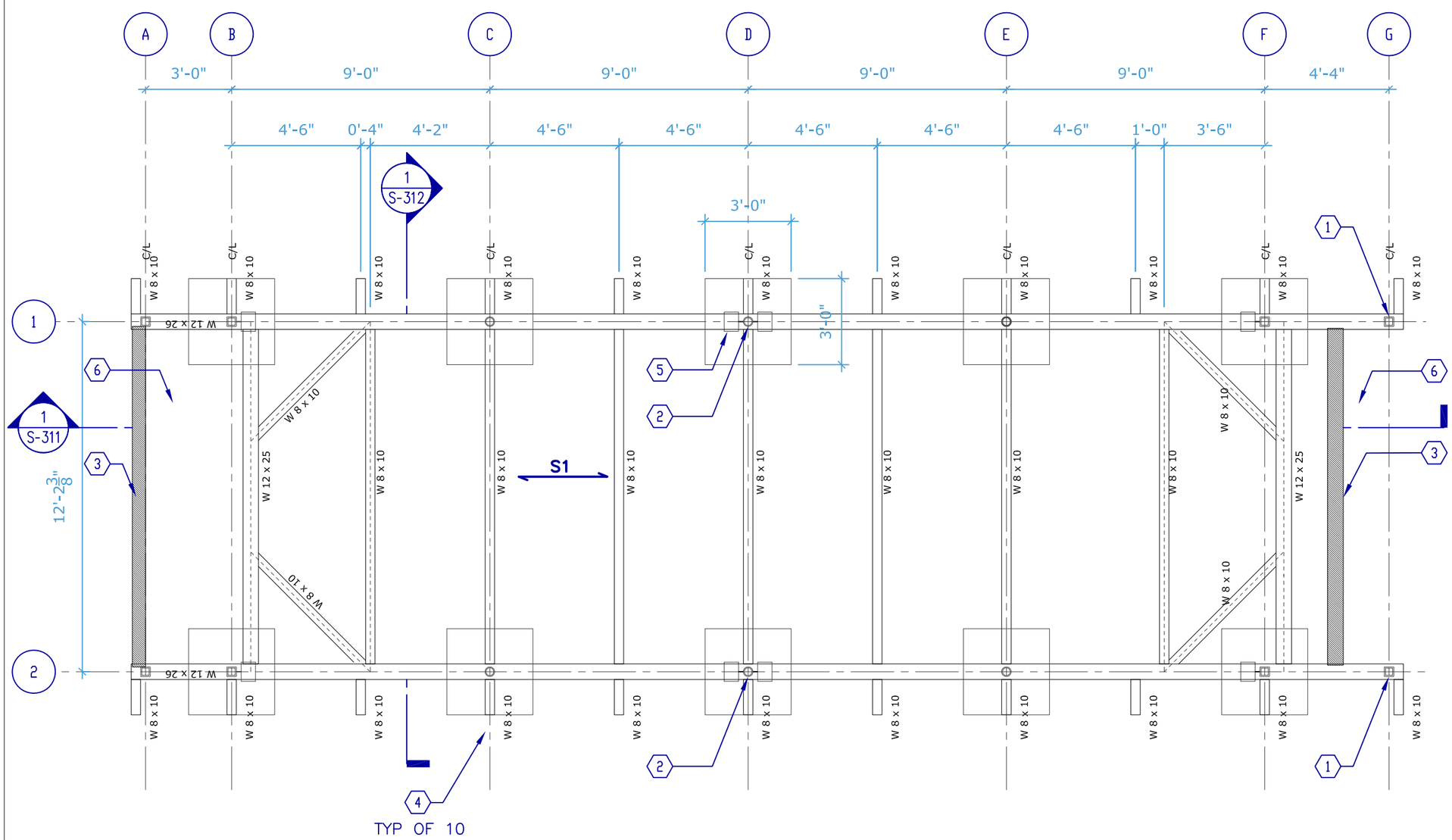

1 S-111

FIRST FLOOR STRUCTURAL PLAN

SCALE: 1/4" = 1'-0"

0 5 10 15

GENERAL SHEET NOTES

- S1 2½" NWC ON 1½"–20ga COMPOSITE METAL DEC (LOK–FLOOR MANUFACTURED BY UNITED STEEL DECK)
- ALL W8X10 BEAMS SHALL HAVE ¾"ø x 4"lg HEADED SHEAR STUDS 12" O.C.
- CONCRETE STRENGTH SHALL BE f'c=3000psi
- FLOOR HAS BEEN DESIGNED TO SUPPORT THE FOLLOWING LOADS:
  GENERAL AREAS–
  SUPER IMPOSED DEAD LOAD: 15psf
  LIVE LOAD: 50psf
  MECHANICAL AREAS–
  SUPER IMPOSED DEAD LOAD: 15psf
  EQUIPMENT LIVE LOAD: 100psf
  EGRESS ROUTE–
  SUPER IMPOSED DEAD LOAD: 0psf
  LIVE LOAD: 100psf
- ALL STEEL SHALL BE THE FOLLOWING GRADES:
  ROLLED SHAPES–
  ASTM A572 GR.50 fy=50ksi
  ROUND HSS–
  ASTM A500 GR.B fy=42ksi
  RECTANGULAR HSS–
  ASTM A500 GR.B fy=46ksi

SHEET KEYNOTES

1. HSS 4x4x5/16
2. HSS 4x5/16 ROUND
3. SHEAR WALL SIP PANELS
4. STEEL GRATE FOUNDATION PLATFORM
5. FLOOR PLATES TO RECEIVE TEMPORARY DIAGONALS
6. TORQUE BOX ASSEMBLY

lumenHAUS
a brighter way. everyday.

Virginia Tech Solar Decathlon 2009
www.lumenhaus.com
Virginia Polytechnic Institute and State University

Mark	Date	Description
CD	06.02.09	Final Submission
4	04.17.09	Clarification #2
3	03.27.09	Clarification #1
DD	02.20.09	Design Development

Solar Decathlon	2009
Date:	06.02.09
Drawn:	CEM + OO
Approved:	JHW

FIRST FLOOR PLAN

S-111

*NOTE: THESE DRAWIONGS NAD CALCULATIONS WERE APPROVED AND STAMPED IN THE LAST SUBMITTAL ON DECEMBER 13, 2008 BY ARUP ENGINEERS

SHEET KEYNOTES

1. SIPS CEILING PANEL
2. UNIT SKYLIGHT
3. OUT RIGGER BEAMS

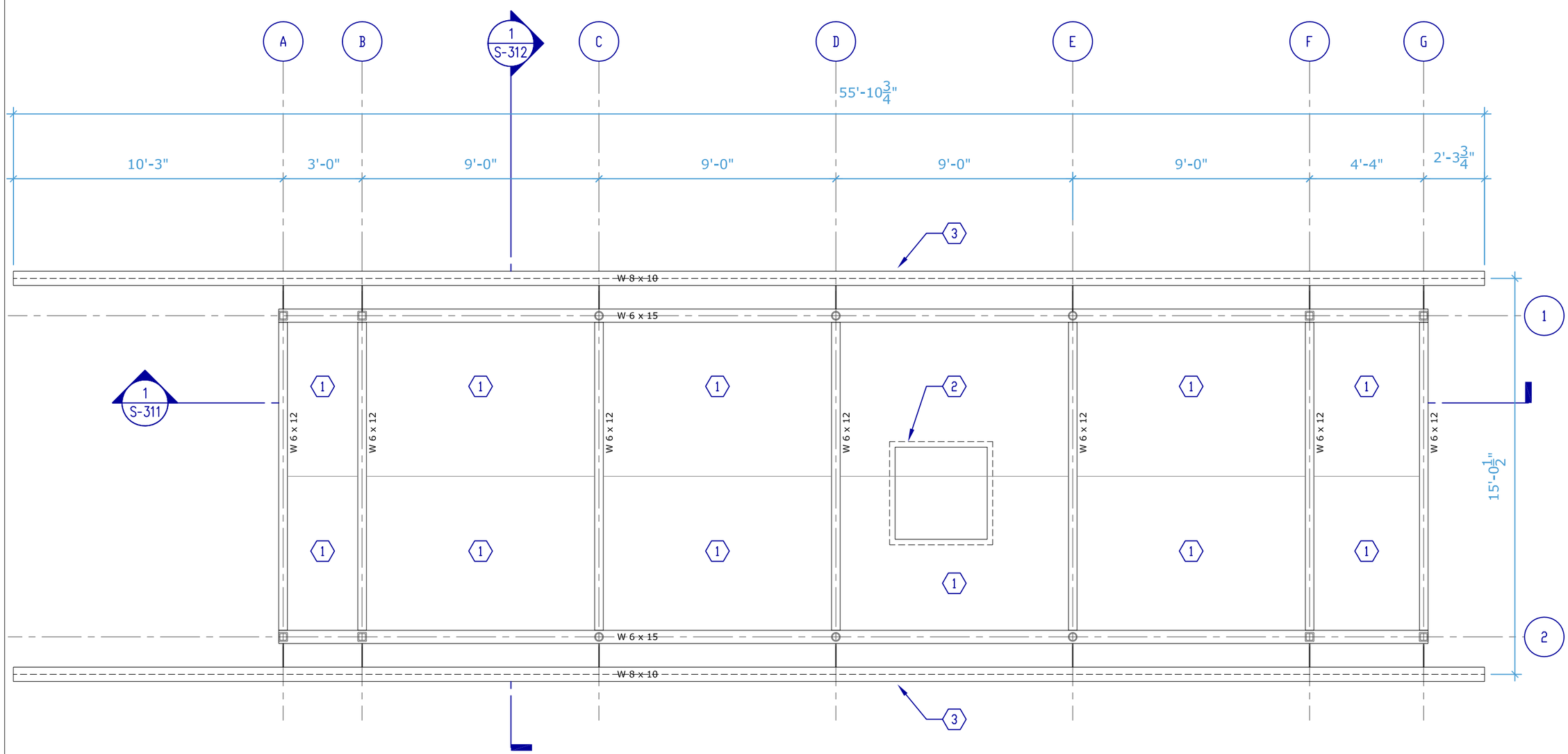

1 S-112 ROOF FRAMING PLAN

SCALE: 1/4" = 1'-0"

0 5 10 15

lumenHAUS a brighter way. everyday.

Virginia Tech **Solar Decathlon 2009**

Virginia Polytechnic Institute and State University

www.lumenhaus.com

Mark	Date	Description
CD	06.02.09	Final Submission
4	04.17.09	Clarification #2
3	03.27.09	Clarification #1
DD	02.20.09	Design Development

Solar Decathlon	2009
Date:	06.02.09
Drawn:	CEM + OO
Approved:	JHW

ROOF FRAMING PLAN

S-112

STEEL FRAME

PREFABRICATED

INCREASED MANUFACTURING PRECISION AND EFFICIENCY

REDUCED MANUFACTURING WASTE OUTPUT

LOW EMBODIED ENERGY IN PRODUCTION

EASILY RECYCLED

MADE FROM RECYCLED MATERIAL

*NOTE: THESE DRAWIONGS NAD CALCULATIONS WERE APPROVED AND STAMPED IN THE LAST SUBMITTAL ON DECEMBER 13, 2008 BY ARUP ENGINEERS

SHEET KEYNOTES

1. W6x12
2. W12x26
3. W8x10
4. HSS 4"x4"x$\frac{5}{16}$" TUBE
5. 6"x8"x$\frac{5}{16}$" GUSSET PLATE
6. HSS ROUND 4"DIAx$\frac{5}{16}$"
7. 3"x3"x$\frac{3}{16}$" ANGLES REMOVEABLE AFTER TRANSPORT

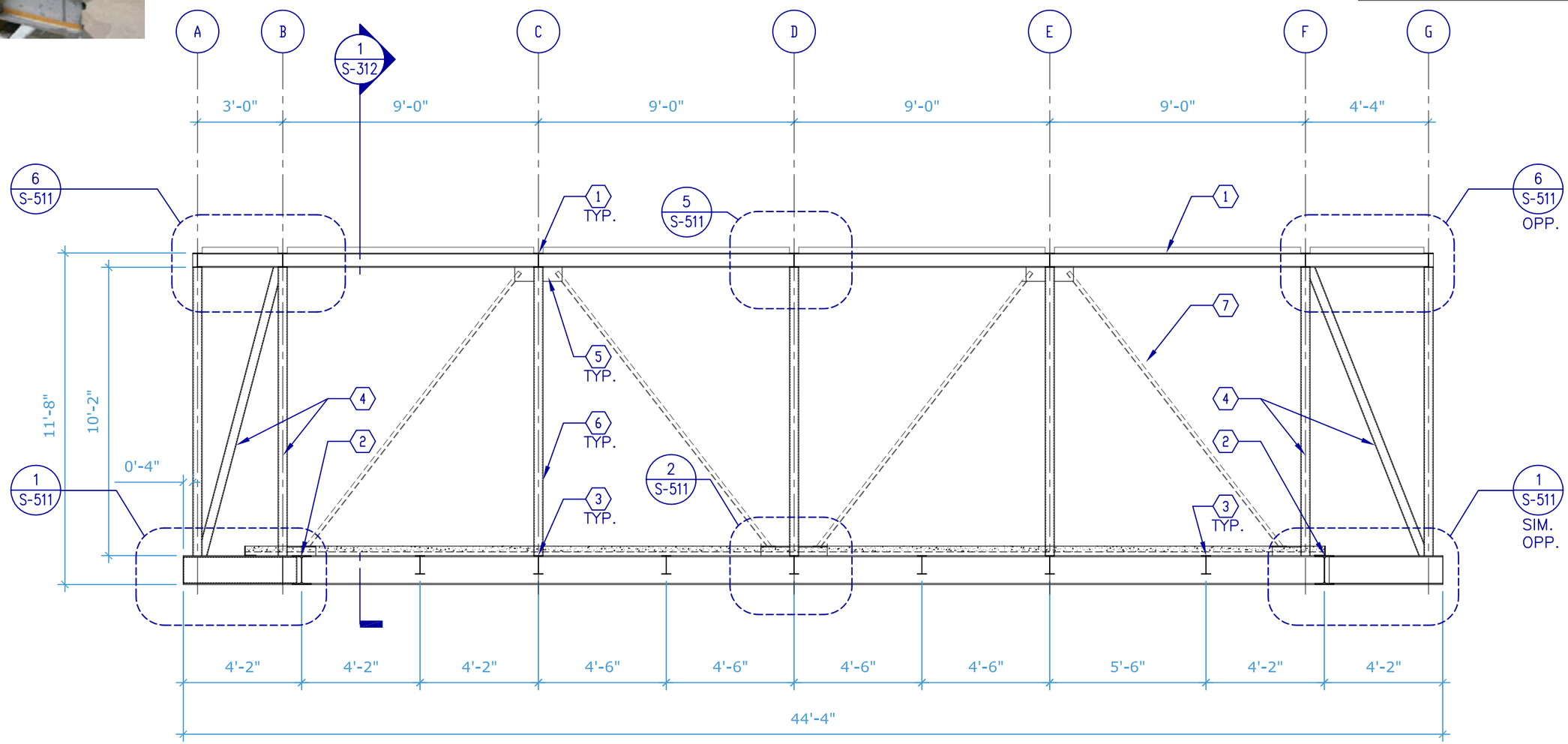

1 / S-311 STRUCTURAL LONGITUDINAL SECTION

SCALE: 1/4" = 1'-0"

0 5 10 15

lumenHAUS a brighter way. everyday.

Virginia Tech **Solar Decathlon 2009**

Virginia Polytechnic Institute and State University

www.lumenhaus.com

Mark	Date	Description
CD	06.02.09	Final Submission
Δ	04.17.09	Clarification #2
Δ	03.27.09	Clarification #1
DD	02.20.09	Design Development

Solar Decathlon	2009
Date:	06.02.09
Drawn:	CEM + OO
Approved:	JHW

LONGITUDINAL SECTION

S-311

*NOTE: THESE DRAWIONGS NAD CALCULATIONS WERE APPROVED AND STAMPED IN THE LAST SUBMITTAL ON DECEMBER 13, 2008 BY ARUP ENGINEERS

PREFABRICATION

STURDY AND PERMANENT CONSTRUCTION SYSTEM

RECYCLABLE MATERIAL

FRAMES PREFABRICATED AT KULLMAN BUILDING CORPS

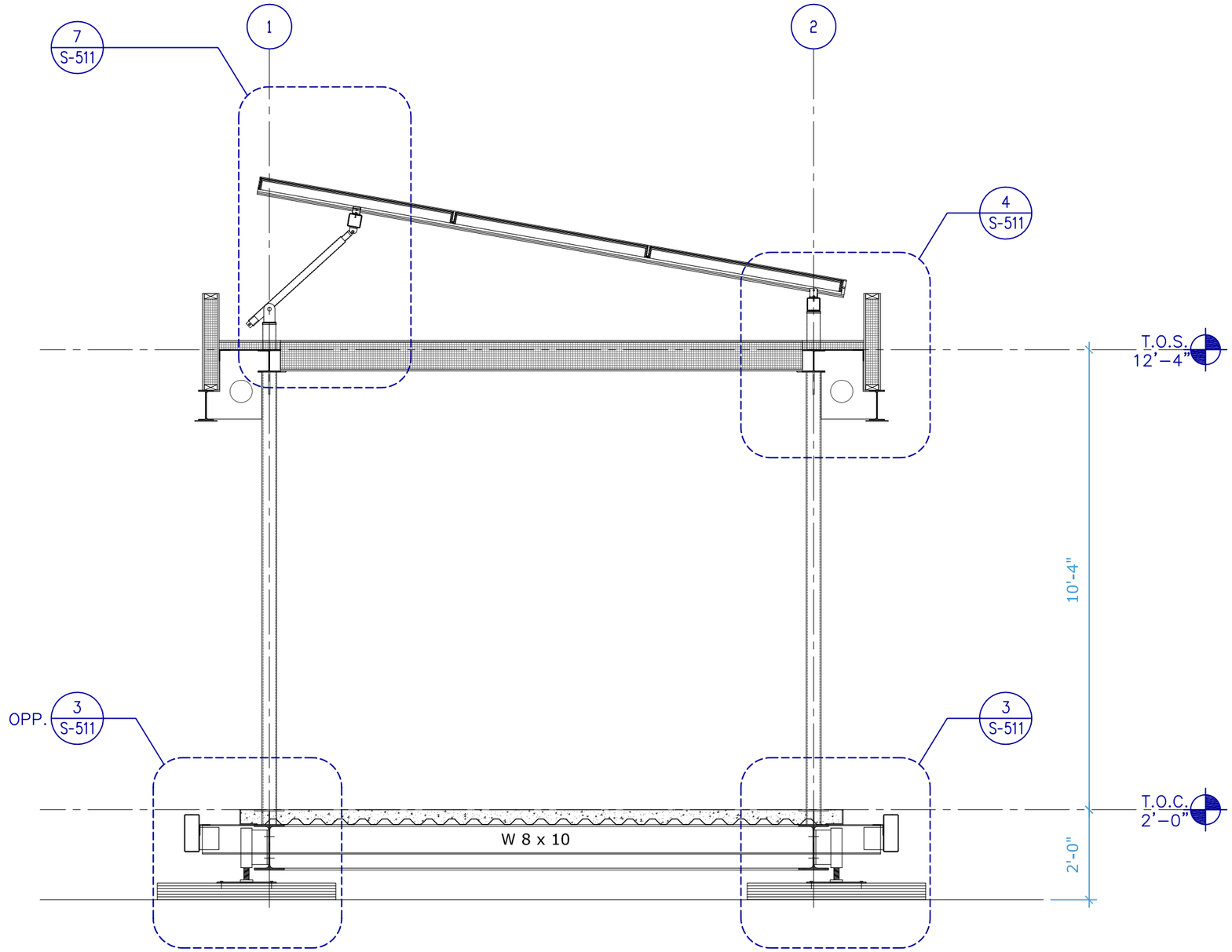

1
S-312

STRUCTURAL TRANSVERSE SECTION

SCALE: 3/8" = 1'-0"

lumenHAUS
a brighter way. everyday.

Virginia Tech **Solar Decathlon 2009**
www.lumenhaus.com
Virginia Polytechnic Institute and State University

Mark	Date	Description
CD	06.02.09	Final Submission
4	04.17.09	Clarification #2
3	03.27.09	Clarification #1
DD	02.20.09	Design Development

Solar Decathlon	2009
Date:	06.02.09
Drawn:	CEM + OO
Approved:	JHW

FIRST FLOOR SECTION

S-312

*NOTE: THESE DRAWIONGS NAD CALCULATIONS WERE APPROVED AND STAMPED IN THE LAST SUBMITTAL ON DECEMBER 13, 2008 BY ARUP ENGINEERS

GENERAL SHEET NOTES

SEE SCHEDULE ON S-601 FOR STEEL SIZING INFORMATION

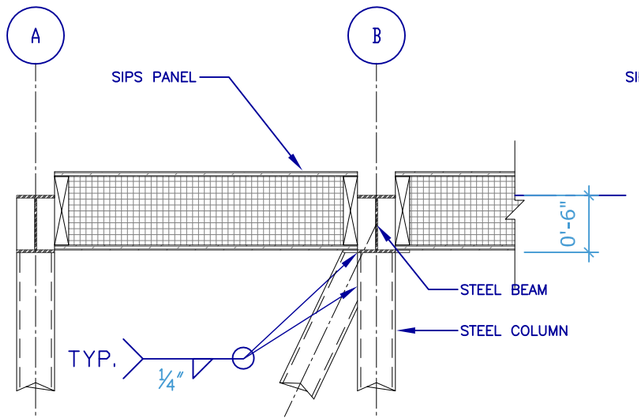

6 S-511 SECTION DETAIL
SCALE: 3/4" = 1'-0"

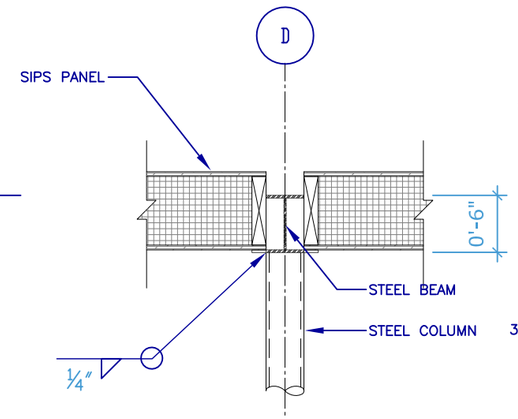

5 S-511 SECTION DETAIL
SCALE: 3/4" = 1'-0"

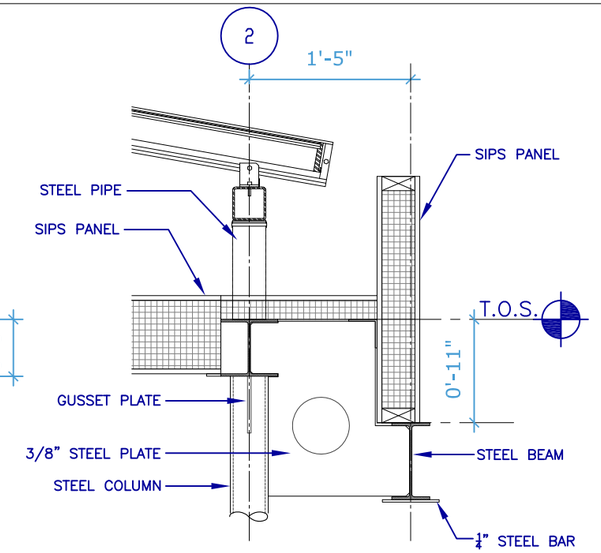

4 S-511 SECTION DETAIL
SCALE: 3/4" = 1'-0"

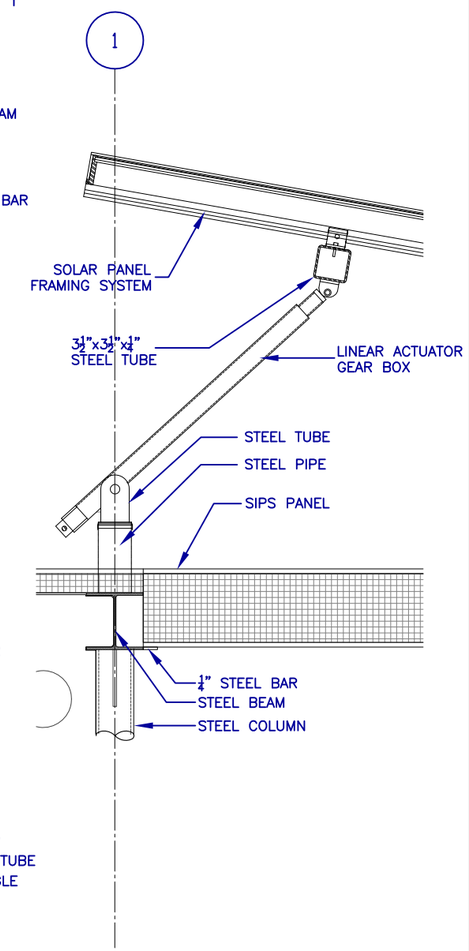

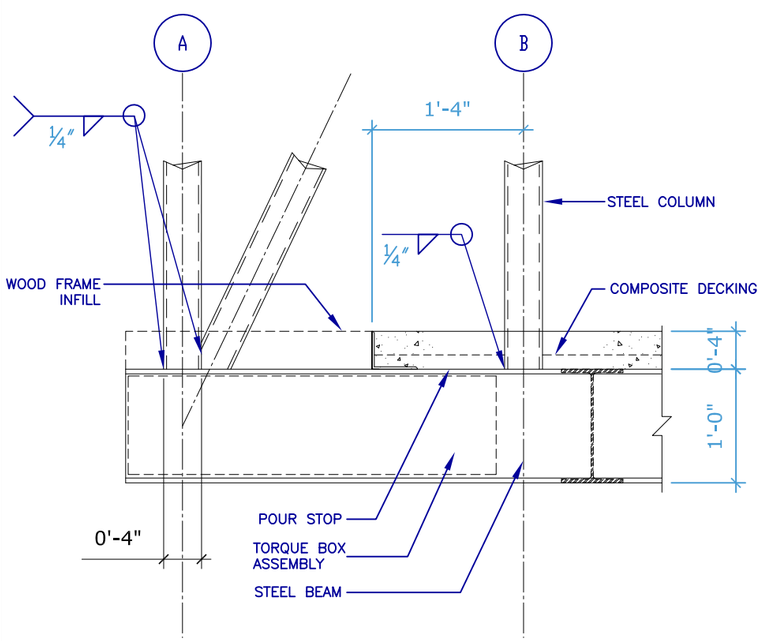

1 S-511 SECTION DETAIL
SCALE: 3/4" = 1'-0"

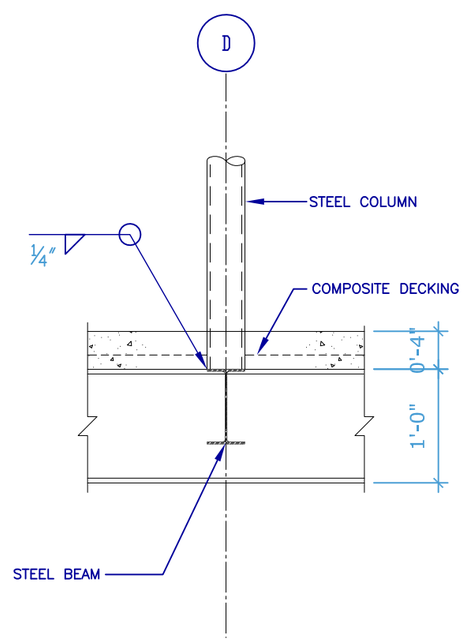

2 S-511 SECTION DETAIL
SCALE: 3/4" = 1'-0"

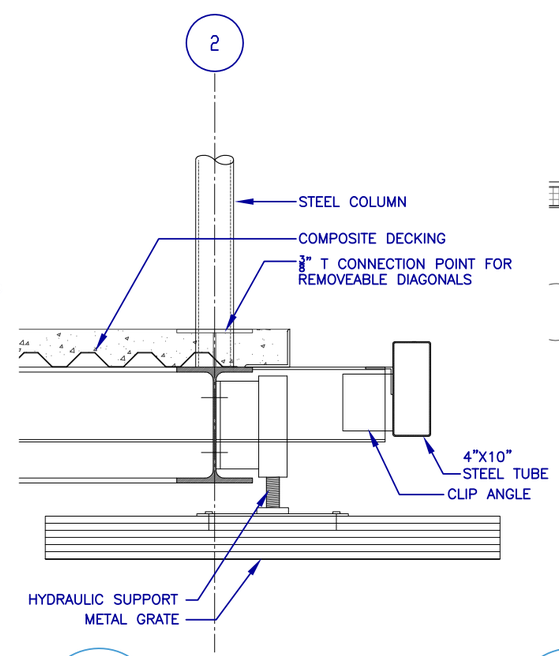

3 S-511 SECTION DETAIL
SCALE: 3/4" = 1'-0"

7 S-511 SECTION DETAIL
SCALE: 3/4" = 1'-0"

lumenHAUS
a brighter way. everyday.
www.lumenhaus.com

Virginia Tech **Solar Decathlon 2009**
Virginia Polytechnic Institute and State University

Mark	Date	Description
CD	06.02.09	Final Submission
4	04.17.09	Clarification #2
3	03.27.09	Clarification #1
DD	02.20.09	Design Development

Solar Decathlon	2009
Date:	06.02.09
Drawn:	CEM + OO
Approved:	JHW

FIRST FLOOR DETAILS

S-511

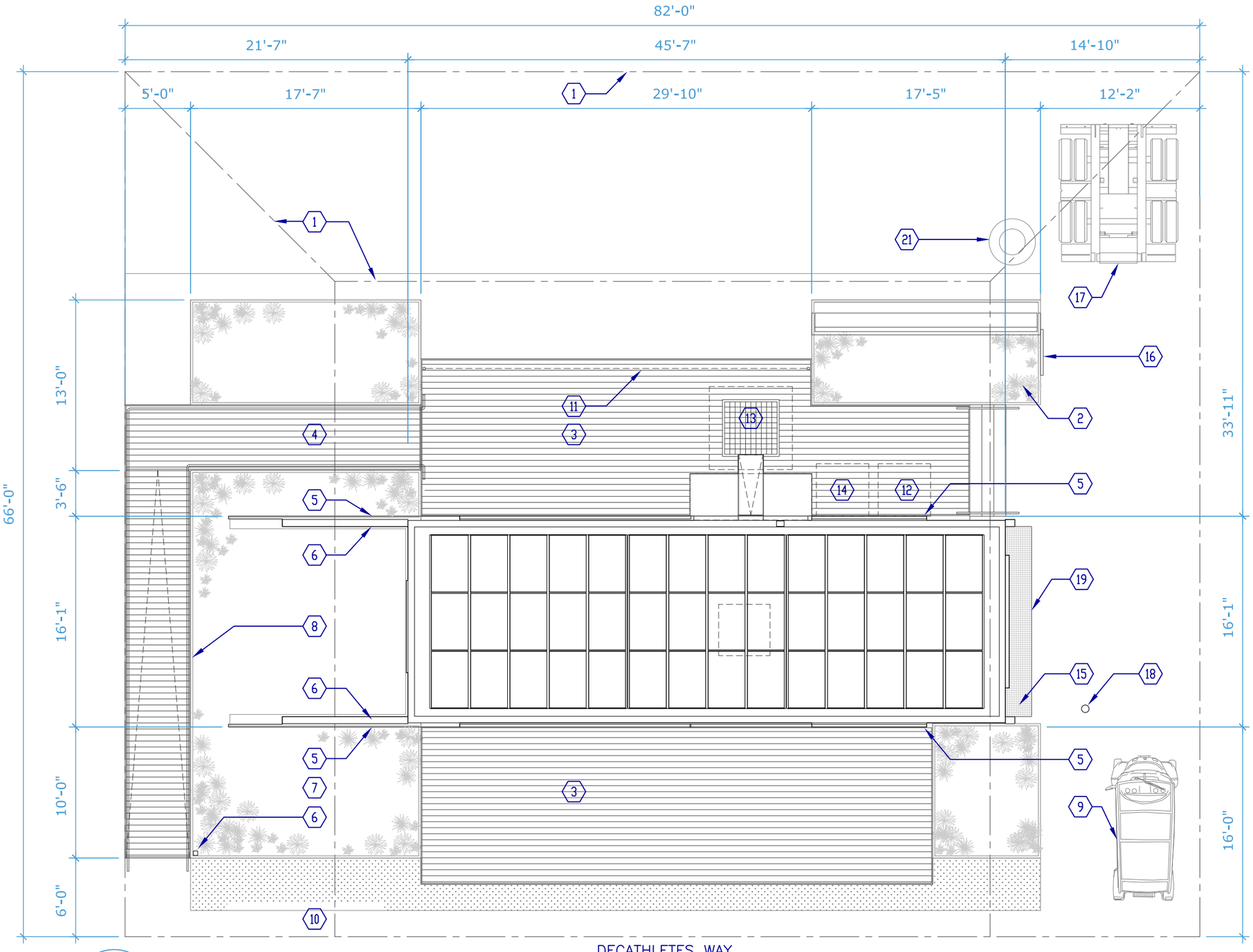

1 A-101 SITE PLAN

SCALE: 1/8" = 1'-0"

SHEET KEYNOTES

1. SOLAR ENVELOPE
2. GEOTHERMAL POOL BASIN AND SHADED COOLING TOWER
3. WOOD DECK
4. BRIDGE
5. METAL PRIVACY SLIDING SCREEN DOOR
6. SLIDING INSULATION PANELS
7. GREYWATER RECYCLING PLANTER (SEE PLANTING PLAN)
8. RAMP – SLOPE 1:12 MINIMUM
9. AUTONOMOUS VEHICLE
10. SIGNAGE W/ EXHIBITION DESCRIPTION & EVENT/TEAM SPONSORRECOGNITION
11. LAUNDRY LINE – RETRACTABLE
12. POTABLE WATER SUPPLY TANK
13. RAINWATER COLLECTION CISTERN
14. WASTE WATER TANK – 300 GALLON
15. ELECTRIC METER LOCATION
16. NREL GRID TIE STATION
17. BOGEY TRANSPORT SYSTEM
18. ELECTRICAL GROUNDING ROD
19. STEEL GRADTING STEP
20. WEATHER STATION
21. EVAPORATIVE COOLING TOWER (BACKUP)

lumenHAUS
a brighter way. everyday.

Virginia Tech Solar Decathlon 2009
Virginia Polytechnic Institute and State University
www.lumenhaus.com

Mark	Date	Description
CD	06.02.09	Final Submission
4	04.17.09	Clarification #2
3	03.27.09	Clarification #1
DD	02.20.09	Design Development

Solar Decathlon	2009
Date:	06.02.09
Drawn:	CEM + OO
Approved:	JHW

SITE PLAN

A-101

GENERAL SHEET NOTES

XXX FOR FINISH SCHEDULES OF EACH ROOM, SEE A-602

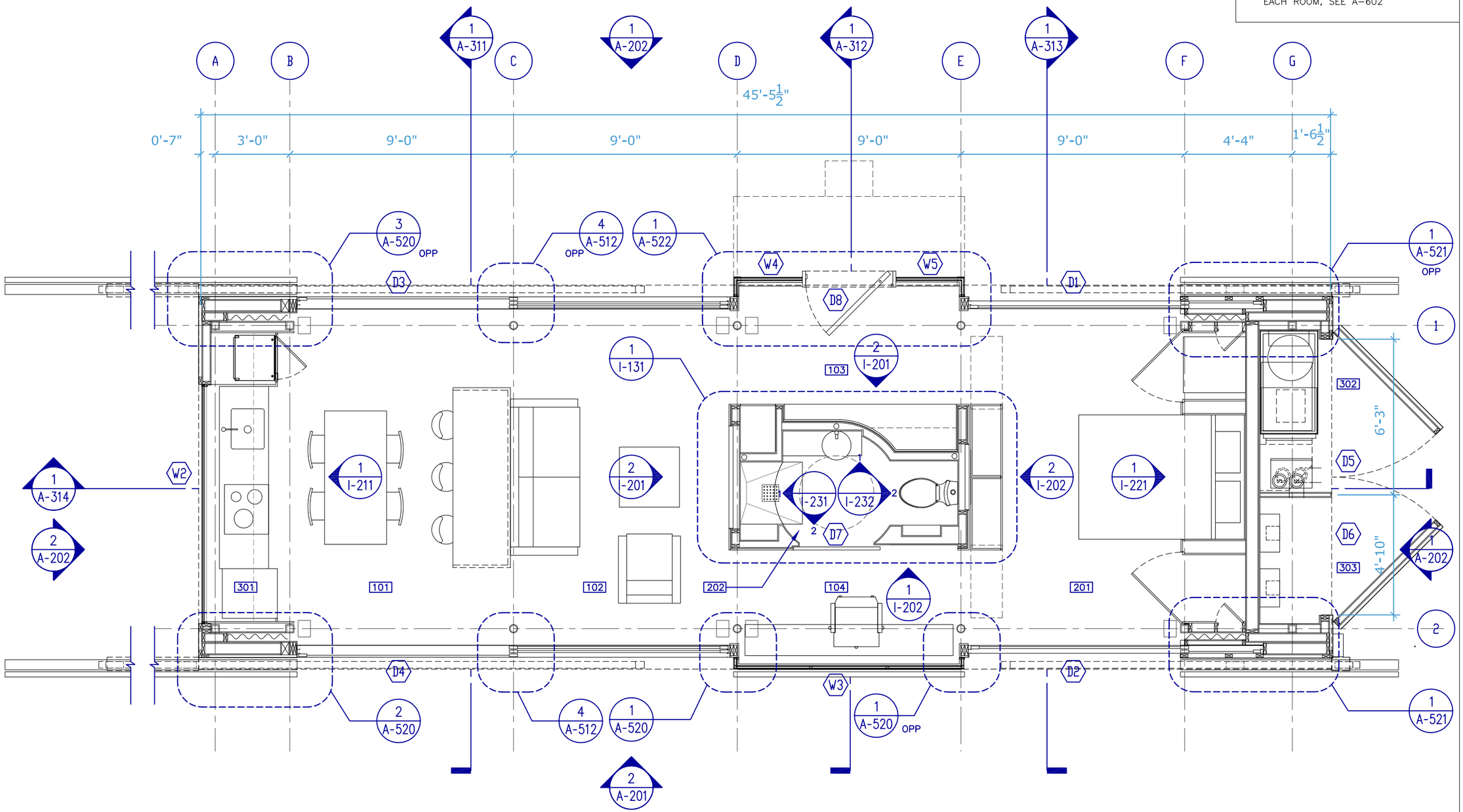

1 A-111 FLOOR PLAN

SCALE: 1/4" = 1'-0"

0 5 10 15

lumenHAUS a brighter way. everyday.

www.lumenhaus.com

Virginia Tech **Solar Decathlon 2009**

Virginia Polytechnic Institute and State University

Mark	Date	Description
CD	06.02.09	Final Submission
4	04.17.09	Clarification #2
3	03.27.09	Clarification #1
DD	02.20.09	Design Development

Solar Decathlon	2009
Date:	06.02.09
Drawn:	CEM + OO
Approved:	JHW

FLOOR PLAN

A-111

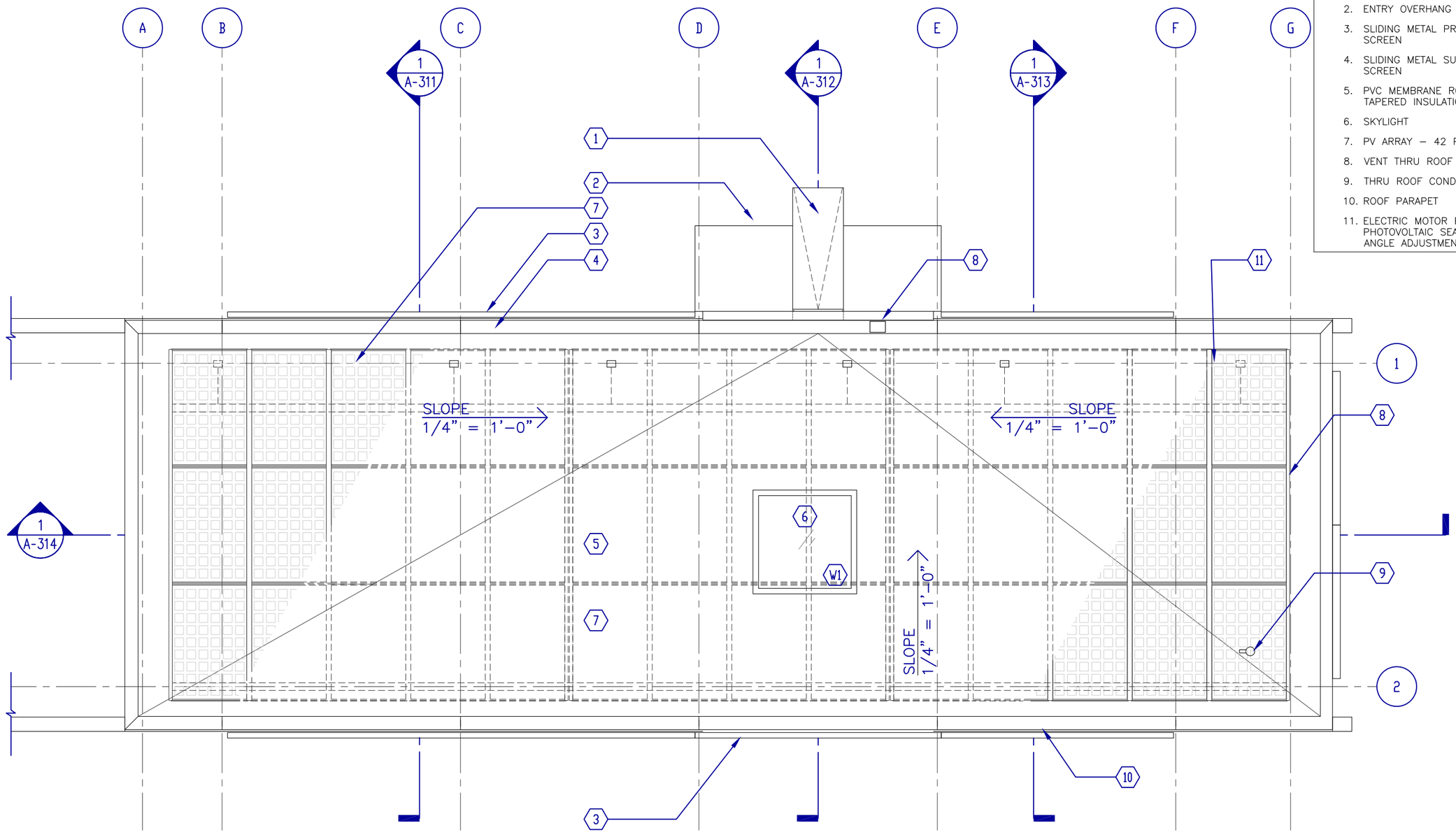

SHEET KEYNOTES

1. SCUPPER AND DOWNSPOUT
2. ENTRY OVERHANG
3. SLIDING METAL PRIVACY SCREEN
4. SLIDING METAL SUNSHADE SCREEN
5. PVC MEMBRANE ROOF ON TAPERED INSULATION
6. SKYLIGHT
7. PV ARRAY – 42 PANELS
8. VENT THRU ROOF
9. THRU ROOF CONDUIT
10. ROOF PARAPET
11. ELECTRIC MOTOR FOR PHOTOVOLTAIC SEASONAL ANGLE ADJUSTMENT

1 / A-112 **ROOF PLAN**

SCALE: 1/4" = 1'-0"

0 5 10 15

lumenHAUS a brighter way. everyday.

Virginia Tech Solar Decathlon 2009

Virginia Polytechnic Institute and State University

www.lumenhaus.com

Mark	Date	Description
CD	06.02.09	Final Submission
4	04.17.09	Clarification #2
3	03.27.09	Clarification #1
DD	02.20.09	Design Development

Solar Decathlon	2009
Date:	06.02.09
Drawn:	CEM + 00
Approved:	JHW

ROOF PLAN

A-112

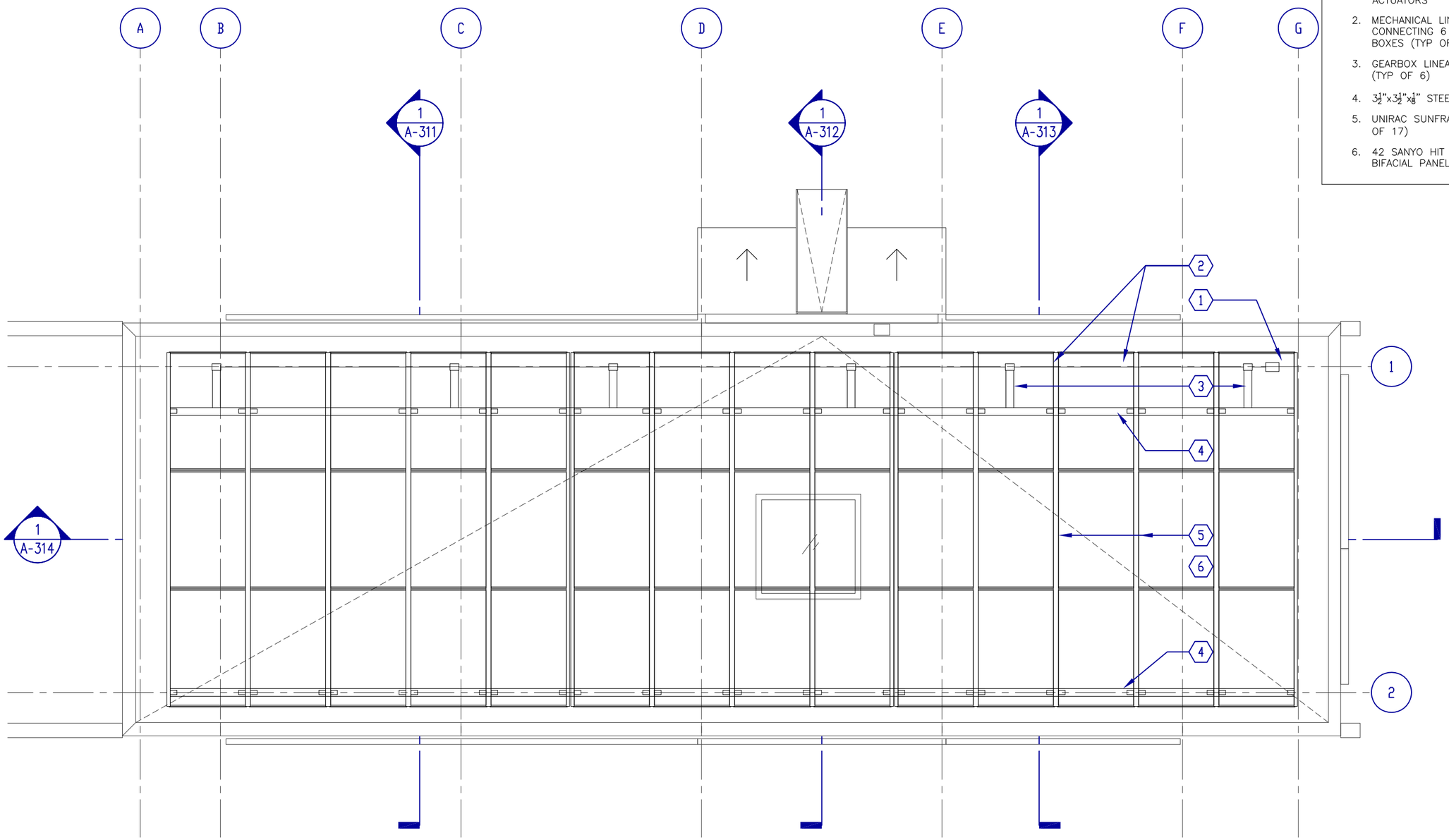

SHEET KEYNOTES

1. MOTOR DRIVE FOR GEARBOX ACTUATORS
2. MECHANICAL LINKAGE CONNECTING 6 IN-LINE GEAR BOXES (TYP OF 5)
3. GEARBOX LINEAR ACTUATORS (TYP OF 6)
4. $3\frac{1}{2}$"x$3\frac{1}{2}$"x$\frac{1}{8}$" STEEL TUBE
5. UNIRAC SUNFRAME STRUT (TYP OF 17)
6. 42 SANYO HIT DOUBLE BIFACIAL PANELS

1 / A-112A

ROOF PLAN - PHOTOVOLTAIC FRAME

SCALE: 1/4" = 1'-0"

0 5 10 15

lumenHAUS
a brighter way. everyday.

Virginia Tech Solar Decathlon 2009
www.lumenhaus.com
Virginia Polytechnic Institute and State University

Mark	Date	Description
CD	06.02.09	Final Submission
4	04.17.09	Clarification #2
3	03.27.09	Clarification #1
DD	02.20.09	Design Development

Solar Decathlon	2009
Date:	06.02.09
Drawn:	CEM + OO
Approved:	JHW

PV FRAME PLAN

A-112A

N3 PRIVACY SCREEN CLOSED
INSULATION PANEL CLOSED

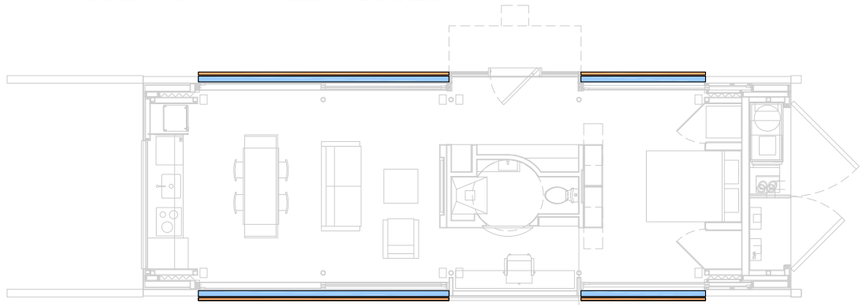

S3 SUNSHADE SCREEN CLOSED
INSULATION PANEL CLOSED

N1 PRIVACY SCREEN OPEN
INSULATION PANEL CLOSED

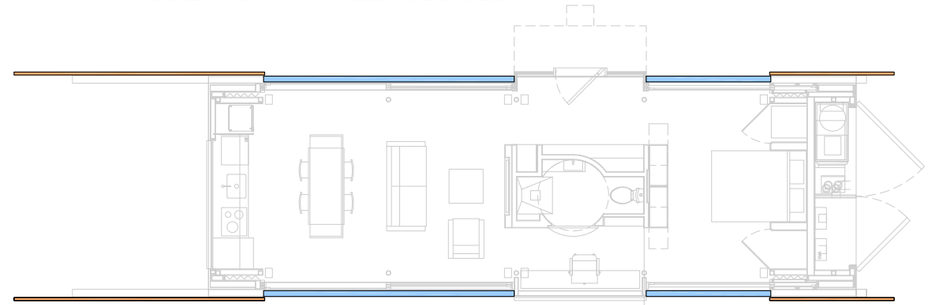

S1 SUNSHADE SCREEN OPEN
INSULATION PANEL CLOSED

N4 SCREEN OPEN
INSULATION OPEN

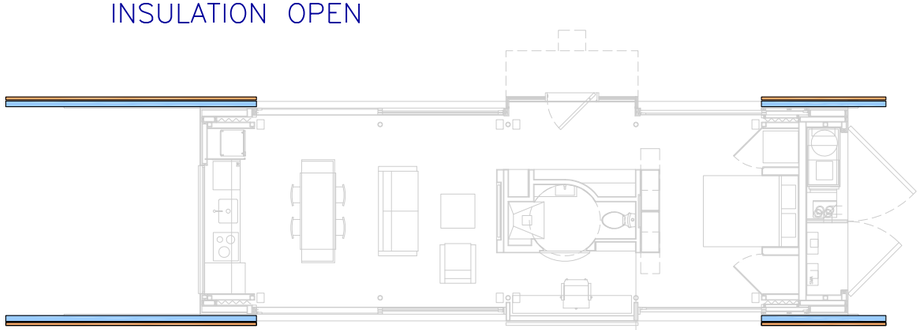

S4 SUNSHADE SCREEN OPEN
INSULATION PANEL OPEN

N2 PRIVACY SCREEN CLOSED
INSULATION PANEL OPEN

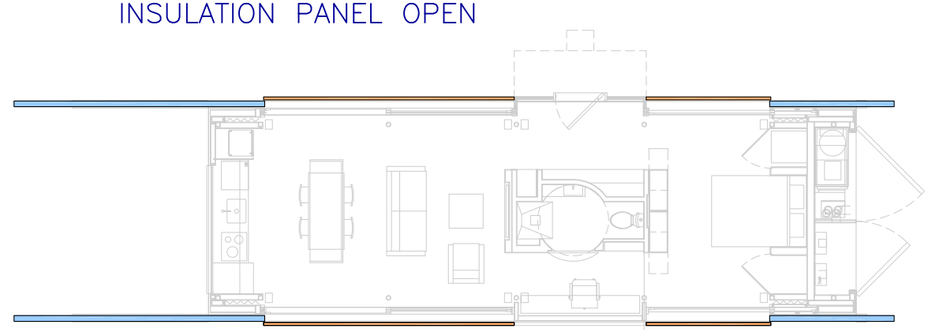

S2 SUNSHADE SCREEN CLOSED
INSULATOIN PANEL OPEN

1
A-113

PLAN CONFIGURATIONS - OPERATION SCENARIOS

SCALE: 3/32" = 1'-0"

0 10 20 30

GENERAL NOTES

ECLIPSIS SCREEN SYSTEM:

POTENTIAL OPERATION SCENARIOS

N1 S3 SUMMER 90°
2PM

N4 S3 SUMMER 70°
2PM

N3 S3 FALL RAINY WINDY 45°

N4
S4 FALL OR SPRING 68° DAY
PLEASANT DAY OR NIGHT

N1 S4 WINTER 36°
SUNNY 2PM

N3 S3 WINTER 20°
NIGHTTIME

*SEE ARCHITECTURE NARRATIVE IN PROJECT MANUAL FOR MORE DETAIL

lumenHAUS
a brighter way. everyday.

Virginia Tech Solar Decathlon 2009
Virginia Polytechnic Institute and State University
www.lumenhaus.com

Mark	Date	Description
CD	06.02.09	Final Submission
4	04.17.09	Clarification #2
3	03.27.09	Clarification #1
DD	02.20.09	Design Development

Solar Decathlon	2009
Date:	06.02.09
Drawn:	CEM + OO
Approved:	JHW

OPERATION SCENARIOS PLAN

A-113

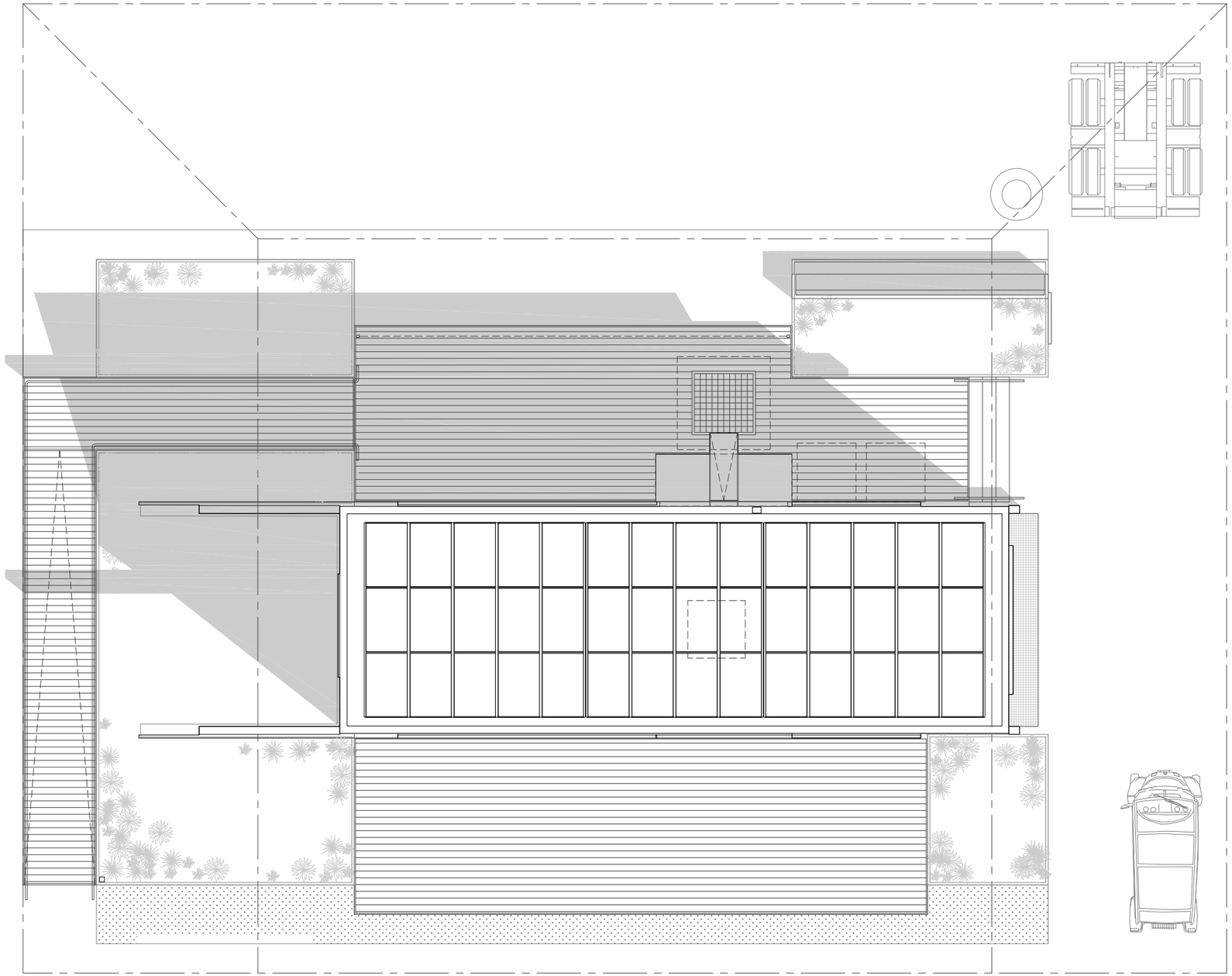

1
A-114

SHADING PLAN

SCALE: 1/8" = 1'-0"

0 10 20 30

GENERAL SHEET NOTES

1. SHADOW CASTED BY THE HOUSE IS AT: 9:00AM 10/01/2009

lumenHAUS
a brighter way. everyday.

Virginia Tech **Solar Decathlon 2009**
Virginia Polytechnic Institute and State University
www.lumenhaus.com

Mark	Date	Description
CD	06.02.09	Final Submission
4	04.17.09	Clarification #2
3	03.27.09	Clarification #1
DD	02.20.09	Design Development

Solar Decathlon	2009
Date:	06.02.09
Drawn:	CEM + OO
Approved:	JHW

SHADING PLAN

A-114

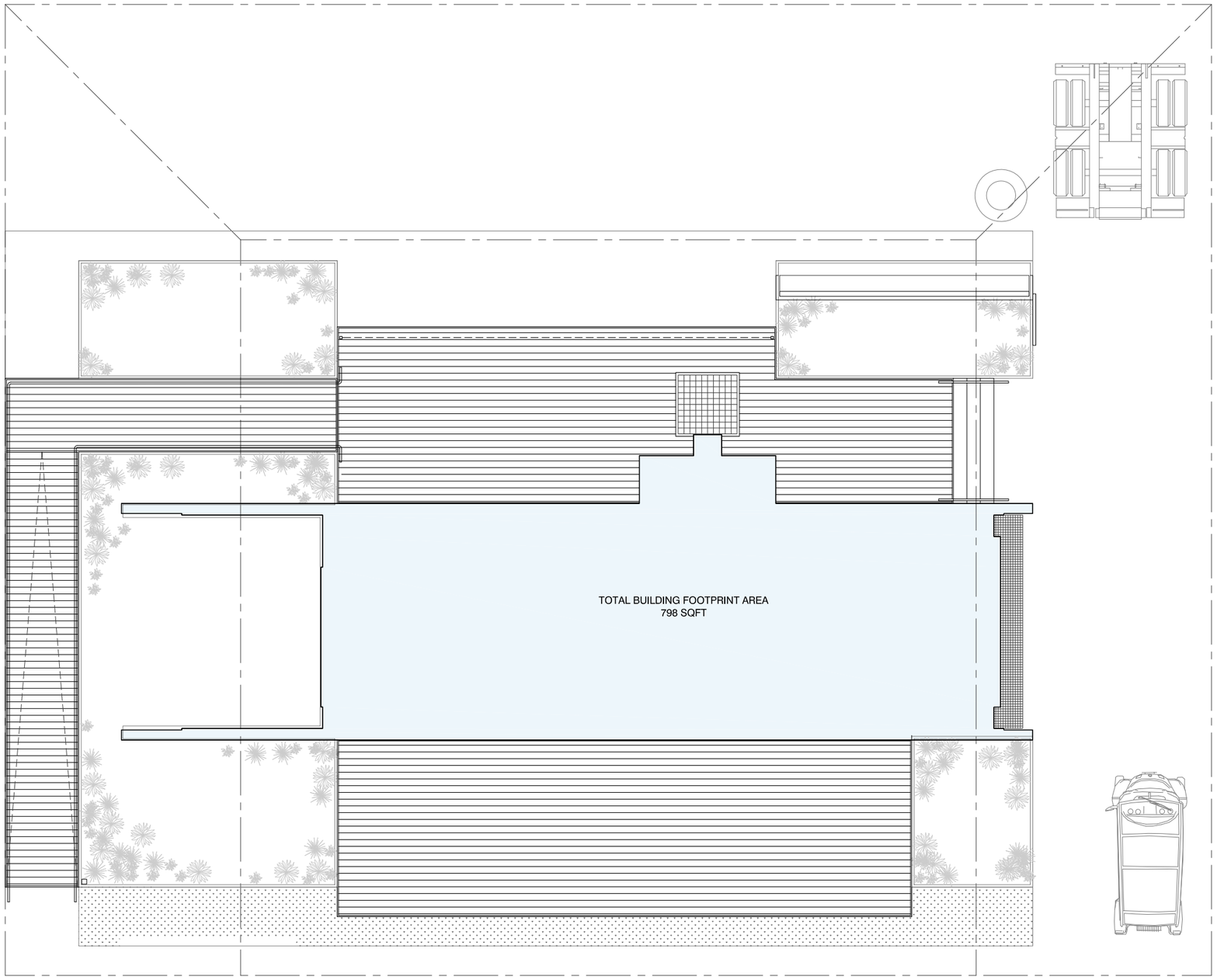

1
A-115

FOOTPRINT AREA PLAN

SCALE: 1/8" = 1'-0"

0 10 20 30

GENERAL SHEET NOTES

1. AREA OF PV ARRAY: 560 SQFT
2. TOTAL BUILDING FOOTPRINT: 798 SQFT

lumenHAUS
a brighter way. everyday.

Virginia Tech **Solar Decathlon 2009**
Virginia Polytechnic Institute and State University
www.lumenhaus.com

Mark	Date	Description
CD	06.02.09	Final Submission
4	04.17.09	Clarification #2
3	03.27.09	Clarification #1
DD	02.20.09	Design Development

Solar Decathlon	2009
Date:	06.02.09
Drawn:	CEM + OO
Approved:	JHW

FOOTPRINT AREA PLAN

A-115

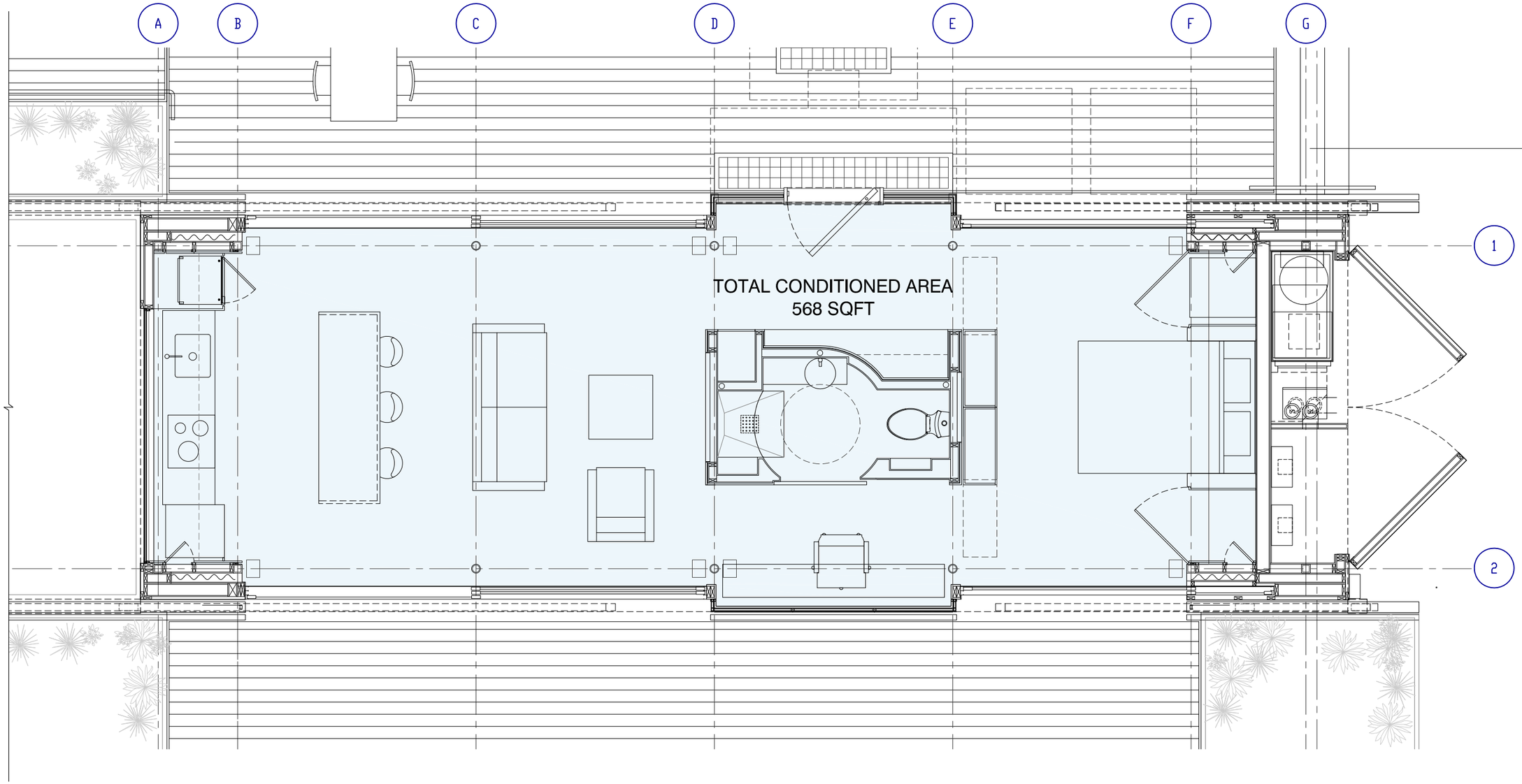

1
A-116

CONDITIONED SPACE PLAN

SCALE: 1/4" = 1'-0"

0 10 20 30

lumenHAUS
a brighter way. everyday.

Virginia Tech Solar Decathlon 2009
Virginia Polytechnic Institute and State University
www.lumenhaus.com

Mark	Date	Description
CD	06.02.09	Final Submission
4	04.17.09	Clarification #2
3	03.27.09	Clarification #1
DD	02.20.09	Design Development

Solar Decathlon	2009
Date:	06.02.09
Drawn:	CEM + OO
Approved:	JHW

CONDITIONED SPACE PLAN

A-116

SHEET KEYNOTES

1. SLIDING METAL SCREEN
2. SLIDING POLYCARBONATE/ AEROGEL INSULATION PANEL
3. PAINTED WOOD SOFFIT
4. STRETCHED FABRIC LIGHTING SYSTEM
5. AIR DIFFUSER
6. BATHROOM CORE BELOW
7. SKYLIGHT

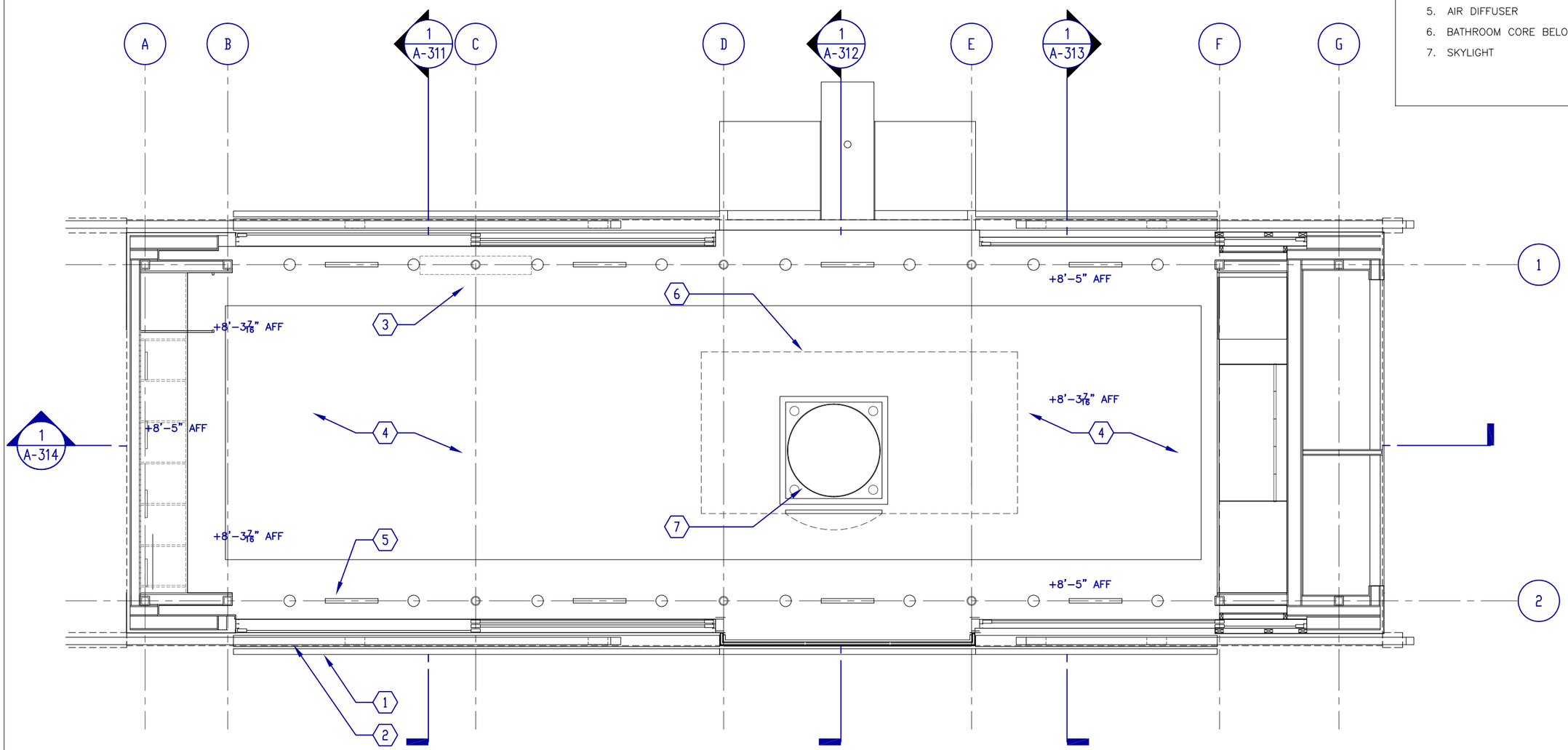

1 A-117 REFLECTED CEILING PLAN

SCALE: 1/4" = 1'-0"

0 5 10 15

lumenHAUS
a brighter way. everyday.

Virginia Tech Solar Decathlon 2009
www.lumenhaus.com
Virginia Polytechnic Institute and State University

Mark	Date	Description
CD	06.02.09	Final Submission
4	04.17.09	Clarification #2
3	03.27.09	Clarification #1
DD	02.20.09	Design Development

Solar Decathlon	2009
Date:	06.02.09
Drawn:	CEM + OO
Approved:	JHW

REFLECTED CEILING PLAN

A-117

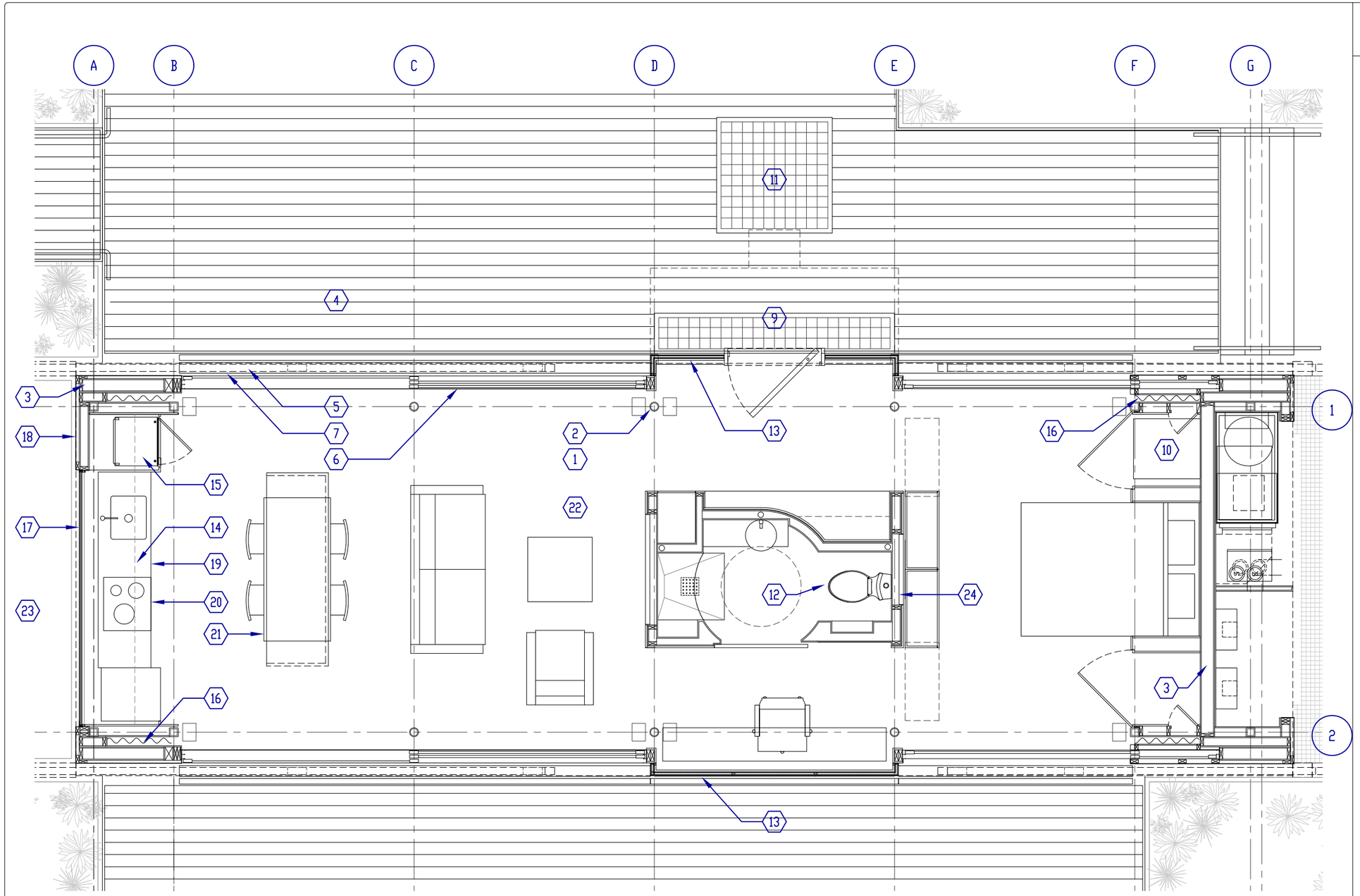

SHEET KEYNOTES

1. HIGH–TOLERANCE CONCRETE FLOOR FINISHING
2. STRUCTURAL STEEL FOR BUILDINGS
3. STRUCTURAL INSULATED PANELS (SIPS)
4. WOOD PATIO DECKING
5. SPRAY FOAM INSULATION
6. SLIDING ALUMINUM–FRAMED GLASS DOORS
7. SLIDING POLYCARBONATE PANEL ASSEMBLIES WITH AEROGEL INSULATION
8. STAINLESS STEEL SHADING SCREENS
9. STAINLESS STEEL ENTRY MAT
10. VENTLESS WASHER/DRYER
11. STAINLESS STEEL GRATE (CISTERN BELOW – RAIN WATER)
12. DUAL FLUSH TOILET
13. INSULATED GLASS UNITS WITH AEROGEL INSULATION
14. PAPER STONE COUNTER
15. ENERGY STAR APPLIANCES
16. SLIDING CURTAIN SYSTEM
17. INSULATED GLASS WINDOW UNIT WITH ELECTRIC TINTING TECHNOLOGY
18. ZINC CLADDING
19. MAPLE VENEERED PLYWOOD PANELING
20. SPACE SAVING KITCHEN ACCESSORIES BY HAFELE
21. SOLID MAPLE CUSTOM FURNITURE
22. STRETCHED FABRIC CEILING ABOVE
23. RECREATED WETLANDS FOR GREYWATER FILTRATION
24. CNC PATTERNED MDF

1 / A-118

MATERIAL PLAN

SCALE: 1/4" = 1'-0"

0 5 10 15

lumenHAUS
a brighter way. everyday.

Virginia Tech Solar Decathlon 2009
www.lumenhaus.com
Virginia Polytechnic Institute and State University

Mark	Date	Description
CD	06.02.09	Final Submission
4	04.17.09	Clarification #2
3	03.27.09	Clarification #1
DD	02.20.09	Design Development

Solar Decathlon	2009
Date:	06.02.09
Drawn:	CEM + 00
Approved:	JHW

MATERIAL PLAN

A-118

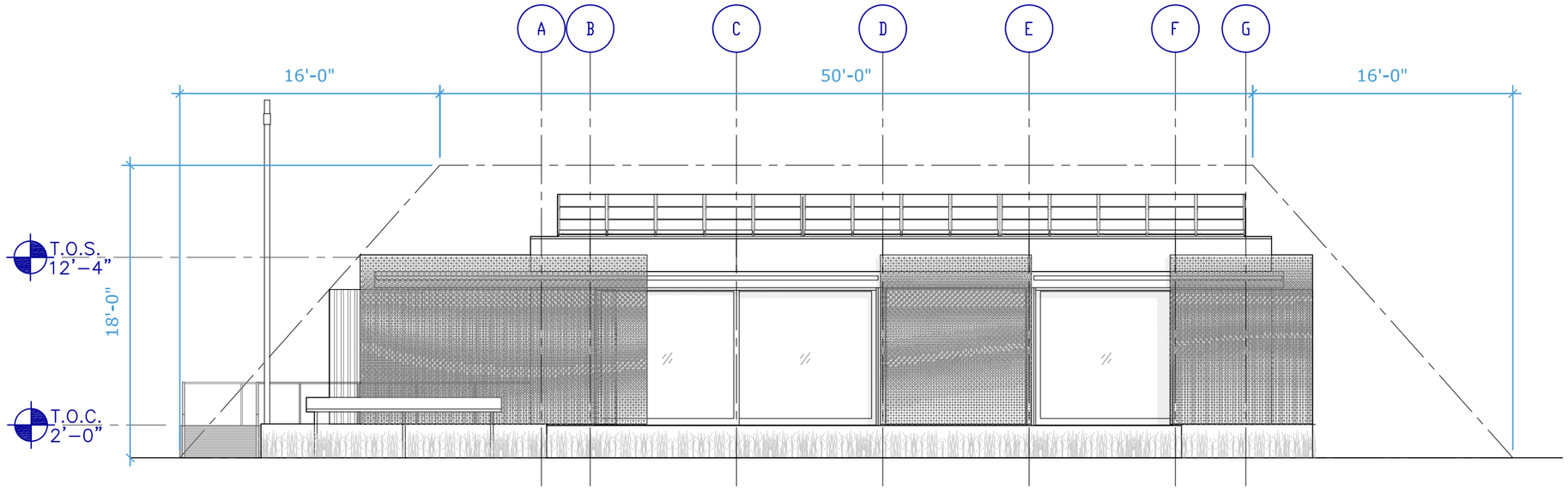

2
A-201

SOUTH SITE ELEVATION

SCALE: 1/8" = 1'-0"

0 10 20 30

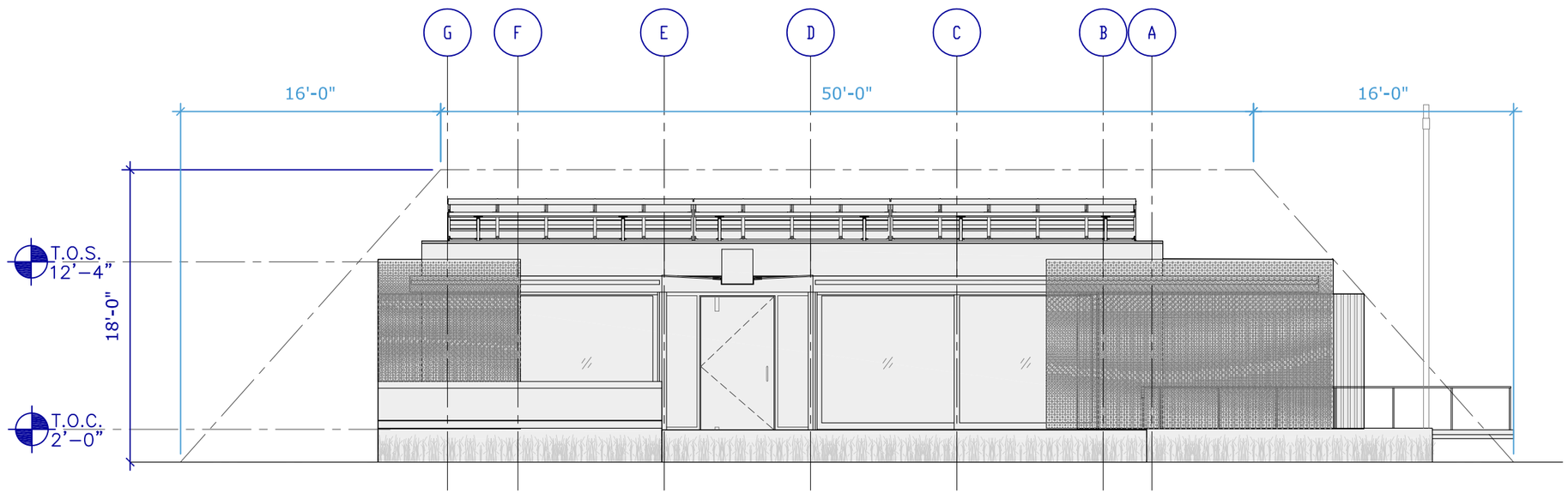

1
A-201

NORTH SITE ELEVATION

SCALE: 1/8" = 1'-0"

0 10 20 30

lumenHAUS
a brighter way. everyday.

Virginia Tech **Solar Decathlon 2009**
Virginia Polytechnic Institute and State University
www.lumenhaus.com

Mark	Date	Description
CD	06.02.09	Final Submission
4	04.17.09	Clarification #2
3	03.27.09	Clarification #1
DD	02.20.09	Design Development

Solar Decathlon	2009
Date:	06.02.09
Drawn:	CEM + 00
Approved:	JHW

SITE ELEVATION

A-201

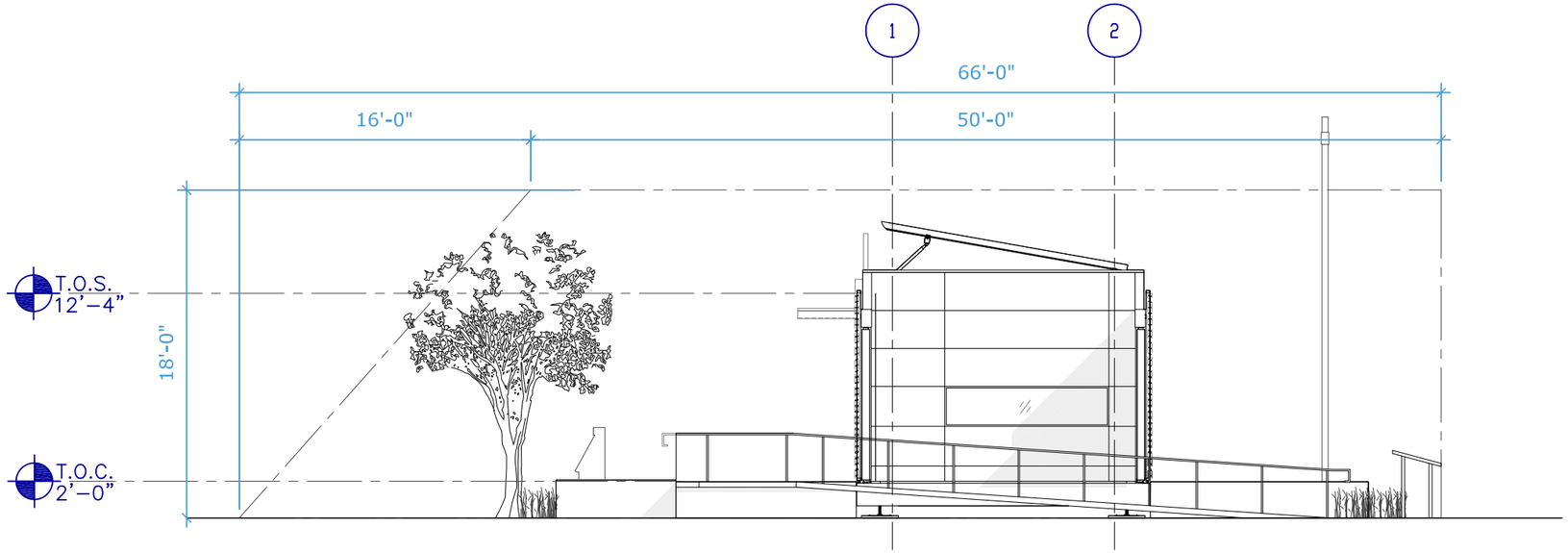

2
A-202

WEST SITE ELEVATION

SCALE: 1/8" = 1'-0"

0 10 20 30

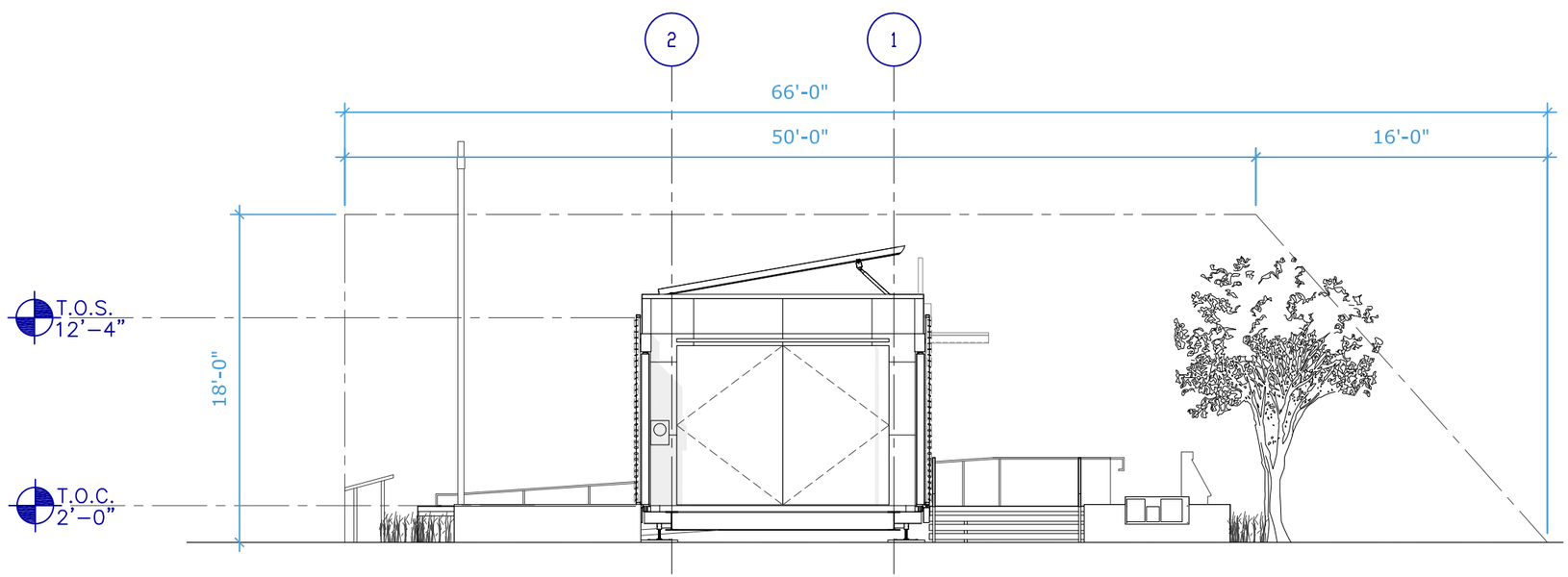

1
A-202

EAST SITE ELEVATION

SCALE: 1/8" = 1'-0"

0 10 20 30

lumenHAUS
a brighter way. everyday.

Virginia Tech Solar Decathlon 2009
www.lumenhaus.com
Virginia Polytechnic Institute and State University

Mark	Date	Description
CD	06.02.09	Final Submission
4	04.17.09	Clarification #2
3	03.27.09	Clarification #1
DD	02.20.09	Design Development

Solar Decathlon	2009
Date:	06.02.09
Drawn:	CEM + 00
Approved:	JHW

SITE ELEVATION

A-202

ALUMINUM WINDOWS & DOORS

LOW ENERGY–INTENSIVE MANUFACTURING PROCESS

100% OF ALUMINUM SCAP RECYCLED BY COMPANY

DURABLE, LIGHTWEIGHT, AND RECYCLABLE AT END OF LIFE

THERMALLY BROKEN FRAME

MINIMUM FRAME SIZE FOR INCREASED DAYLIGHT

SHEET KEYNOTES

1. ZINC CLADDING
2. LINEAR ACTUATOR
3. POLYCARBONATE PANEL
4. METAL SLIDING SCREEN
5. PV ARRAY
6. STAINLESS CAP ENDS WIH ZAHNER
7. PV JACK
8. SCUPPER
9. WOOD DECK

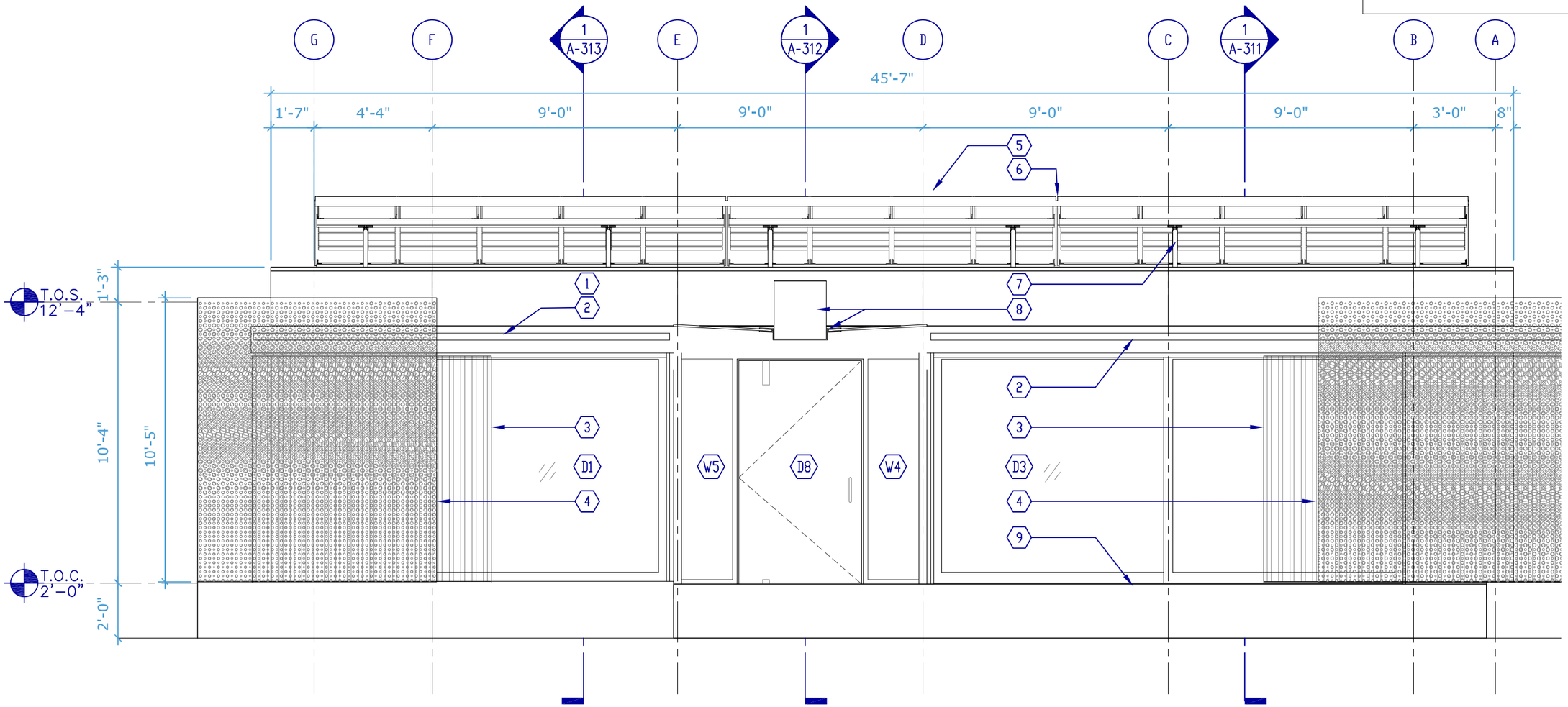

1 / A-211 NORTH BUILDING ELEVATION

SCALE: 1/4" = 1'-0"

0 5 10 15

lumenHAUS
a brighter way. everyday.

Virginia Tech Solar Decathlon 2009
www.lumenhaus.com
Virginia Polytechnic Institute and State University

Mark	Date	Description
CD	06.02.09	Final Submission
Δ	04.17.09	Clarification #2
Δ	03.27.09	Clarification #1
DD	02.20.09	Design Development

Solar Decathlon	2009
Date:	06.02.09
Drawn:	CEM + OO
Approved:	JHW

BUILDING ELEVATION

A-211

PAVILION ARCHITECTURE

OPTION TO OPEN ENTIRE HOUSE TO INCLUDE RETRACTABLE DECK

SMALLER FOOTPRINT OF ACTUAL HOUSE

UTILIZE OUTDOOR ATMOSPHERE

INCREASED NATURAL LIGHT

SHEET KEYNOTES

1. PV ARRAY
2. ZINC CLADDING
3. LINEAR ACTUATOR
4. POLYCARBONATE PANEL
5. METAL SLIDING SCREEN
6. WOOD DECK
7. STAINLESS STEEL

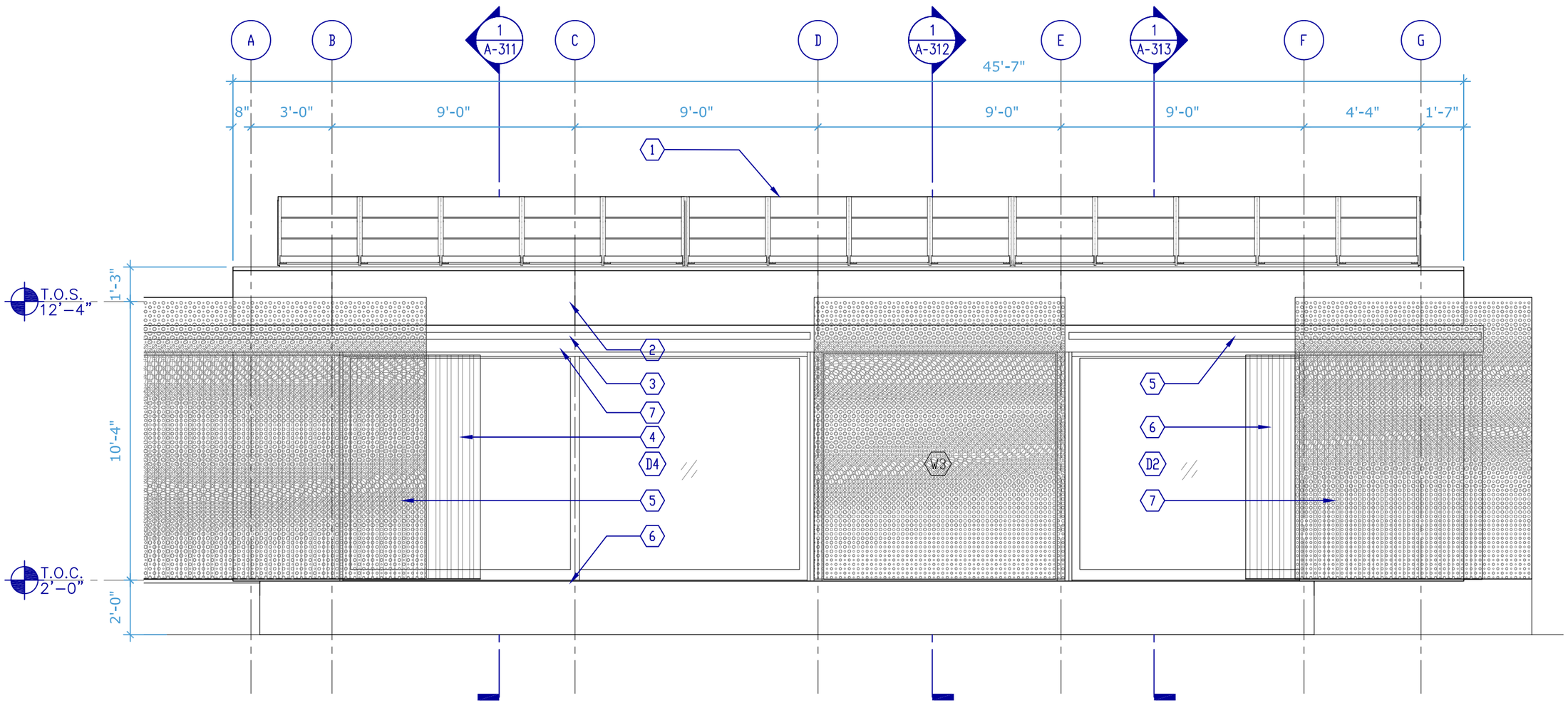

1 / A-212 SOUTH BUILDING ELEVATION

SCALE: 1/4" = 1'-0"

0 5 10 15

lumenHAUS a brighter way. everyday.

Virginia Tech **Solar Decathlon 2009**

Virginia Polytechnic Institute and State University

www.lumenhaus.com

Mark	Date	Description
CD	06.02.09	Final Submission
4	04.17.09	Clarification #2
3	03.27.09	Clarification #1
DD	02.20.09	Design Development

Solar Decathlon	2009
Date:	06.02.09
Drawn:	CEM + OO
Approved:	JHW

BUILDING ELEVATION

A-212

PHOTOVOLTAIC PANELS

17 DEGREE ANGLE OF INCLINATION

NO EMISSIONS DURING USE PHASE

REQUIRES NO ENERGY TO OPERATE AND COLLECT SOLAR ENERGY

UP TO 30% MORE ENERGY GENERATION WITH REAR PV FACE COLLECTION

DECREASED ENERGY PAYBACK TIME

SEASONAL TRACKING FOR INCREASED SOLAR GAIN

SHEET KEYNOTES

1. PV ARRAY
2. OUT RIGGER BEAM ASSEMBLY
3. METAL PRIVACY SCREEN
4. ZINC CLADDING
5. WOOD DECK
6. MANUALLY OPERATED HYDRAULIC JACKS
7. STACK VENT
8. SCUPPER/ENTRY OVERHANG
9. HANDRAIL
10. SHADED GEOTHERMAL POOL BASIN AND COOLING TOWER
11. STEPS: 6" RISER/11" TREAD
12. ELECTRIC METER
13. NREL GRID STATION

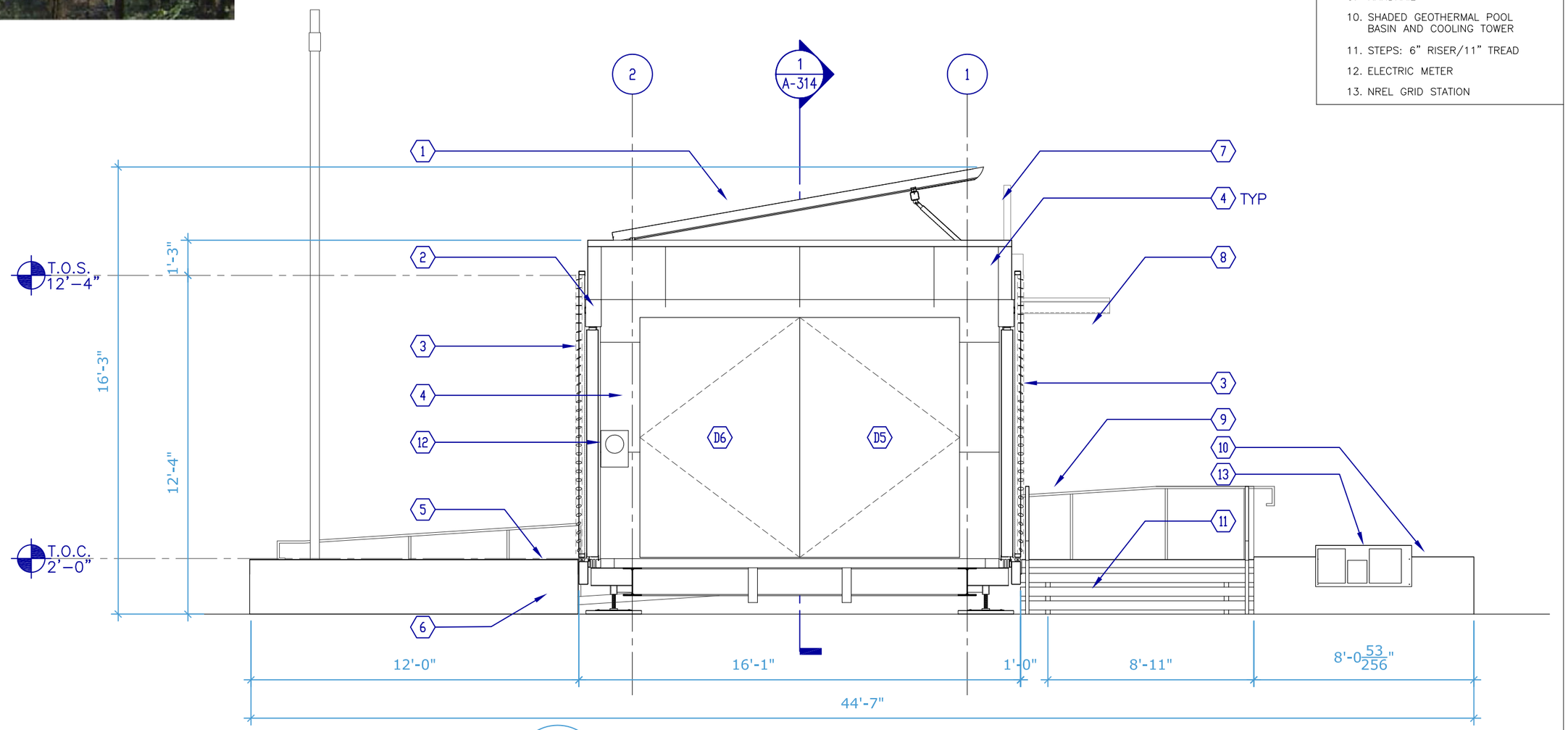

1
A-213

EAST BUILDING ELEVATION

SCALE: 1/4" = 1'-0"

0 5 10 15

lumenHAUS
a brighter way. everyday.

Virginia Tech Solar Decathlon 2009
Virginia Polytechnic Institute and State University
www.lumenhaus.com

Mark	Date	Description
CD	06.02.09	Final Submission
4	04.17.09	Clarification #2
3	03.27.09	Clarification #1
DD	02.20.09	Design Development

Solar Decathlon	2009
Date:	06.02.09
Drawn:	CEM + OO
Approved:	JHW

BUILDING ELEVATION

A-213

ZINC CLADDING

DURABLE AND RECYCLABLE

PROVIDES CORROSION PROTECTION FOR STEEL

ENTENDS LIFE SPAN OF HOUSE

DOES NOT RESTRICT RECYCLABILITY OF STEEL

SHEET KEYNOTES

1. PV ARRAY
2. OUT RIGGER
3. METAL SLIDING SCREEN
4. ZINC CLADDING
5. WOOD DECK
6. MANUALLY OPERATED HYDRAULIC JACKS
7. VENT THRU ROOF
8. SCUPPER/ENTRY OVERHANG

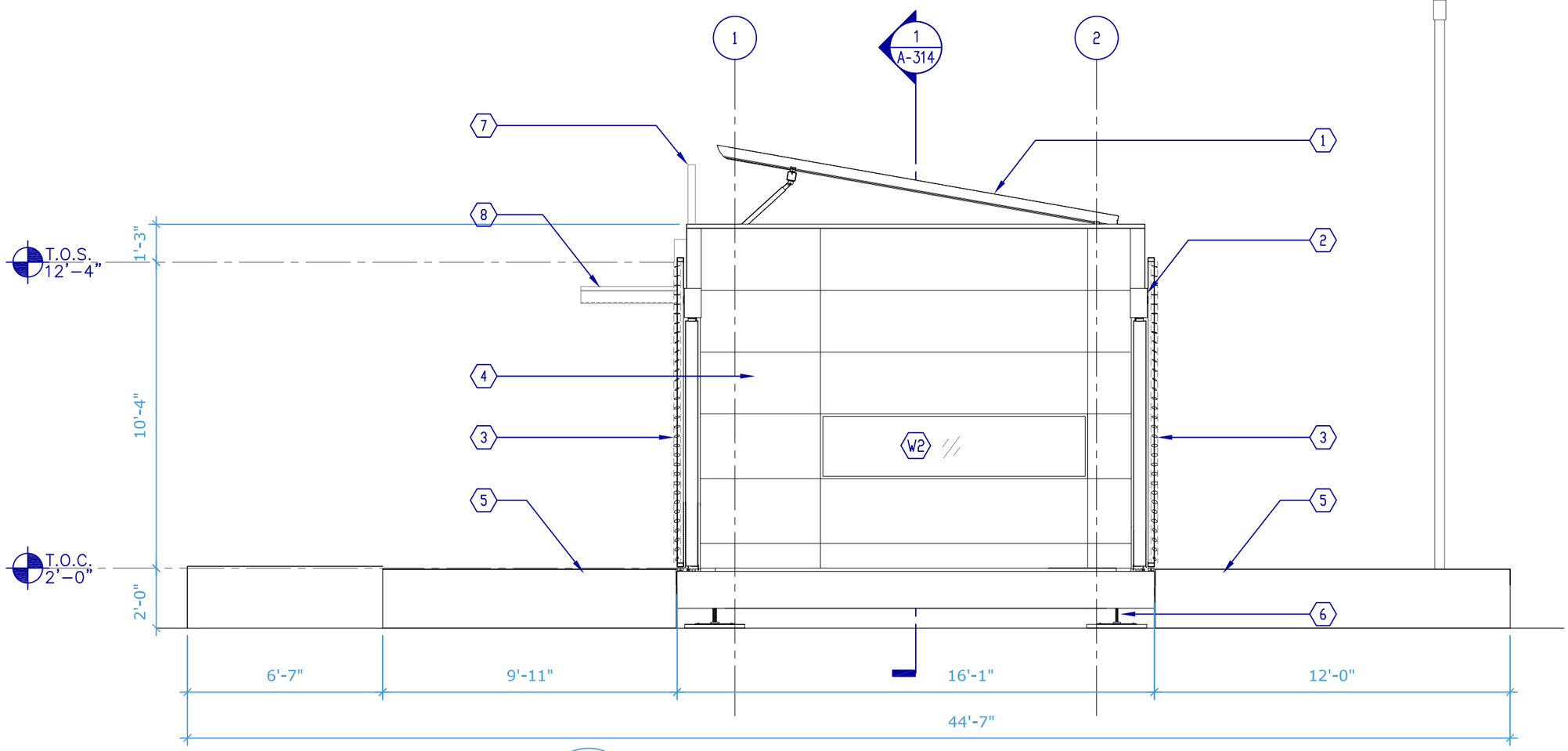

1
A-214

WEST BUILDING ELEVATION

SCALE: 1/4" = 1'-0"

0 5 10 15

lumenHAUS
a brighter way. everyday.

Virginia Tech **Solar Decathlon 2009**
Virginia Polytechnic Institute and State University
www.lumenhaus.com

Mark	Date	Description
CD	06.02.09	Final Submission
4	04.17.09	Clarification #2
3	03.27.09	Clarification #1
DD	02.20.09	Design Development

Solar Decathlon	2009
Date:	06.02.09
Drawn:	CEM + OO
Approved:	JHW

BUILDING ELEVATION

A-214

SHEET KEYNOTES

1. PV ARRAY
2. ROOF INSULATION
3. POLISHED CONCRETE FLOOR
4. WOOD DECK

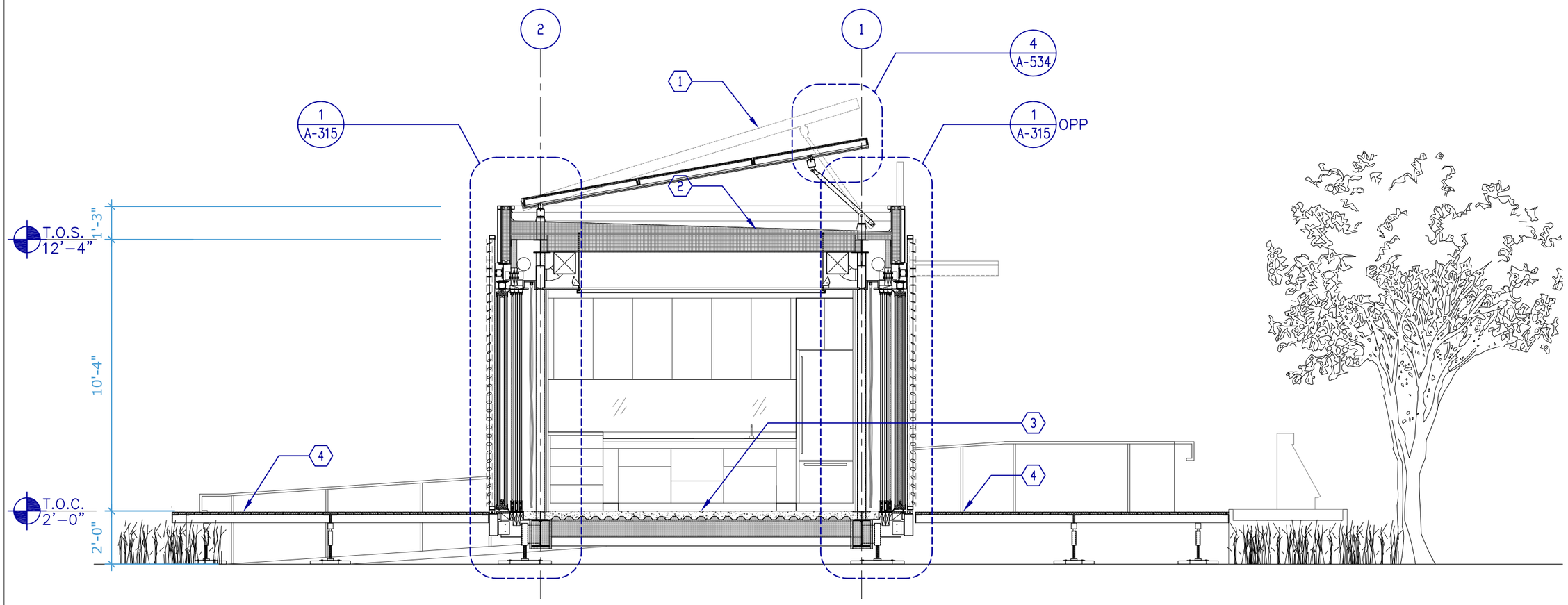

1 / A-311 SECTION @ DINING

SCALE: 1/4" = 1'-0"

0 5 10 15

lumenHAUS
a brighter way. everyday.

Virginia Tech **Solar Decathlon 2009**
www.lumenhaus.com
Virginia Polytechnic Institute and State University

Mark	Date	Description
CD	06.02.09	Final Submission
4	04.17.09	Clarification #2
4	03.27.09	Clarification #1
DD	02.20.09	Design Development

Solar Decathlon	2009
Date:	06.02.09
Drawn:	CEM + OO
Approved:	JHW

BUILDING SECTION

A-311

SHEET KEYNOTES

1. PV ARRAY
2. ROOF INSULATION
3. POLISHED CONCRETE FLOOR
4. WOOD DECK

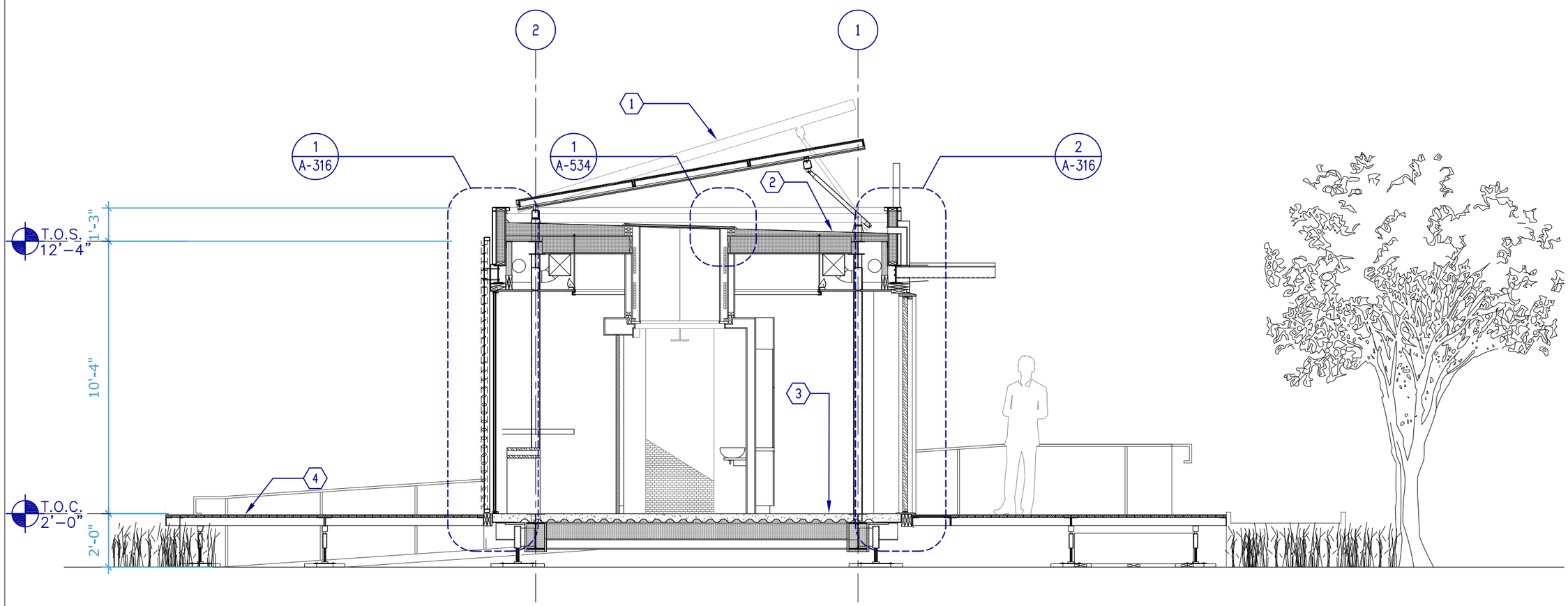

1
A-312

SECTION @ BATHROOM

SCALE: 1/4" = 1'-0"

0 5 10 15

lumenHAUS
a brighter way. everyday.

Decathlon 2009
www.lumenhaus.com

Virginia Tech **Solar Decathlon**
Virginia Polytechnic Institute and State University

Mark	Date	Description
CD	06.02.09	Final Submission
4	04.17.09	Clarification #2
3	03.27.09	Clarification #1
DD	02.20.09	Design Development

Solar Decathlon	2009
Date:	06.02.09
Drawn:	CEM + OO
Approved:	JHW

BUILDING SECTION

A-312

SHEET KEYNOTES

1. PV ARRAY
2. ROOF INSULATION
3. POLISHED CONCRETE FLOOR
4. WOOD DECK

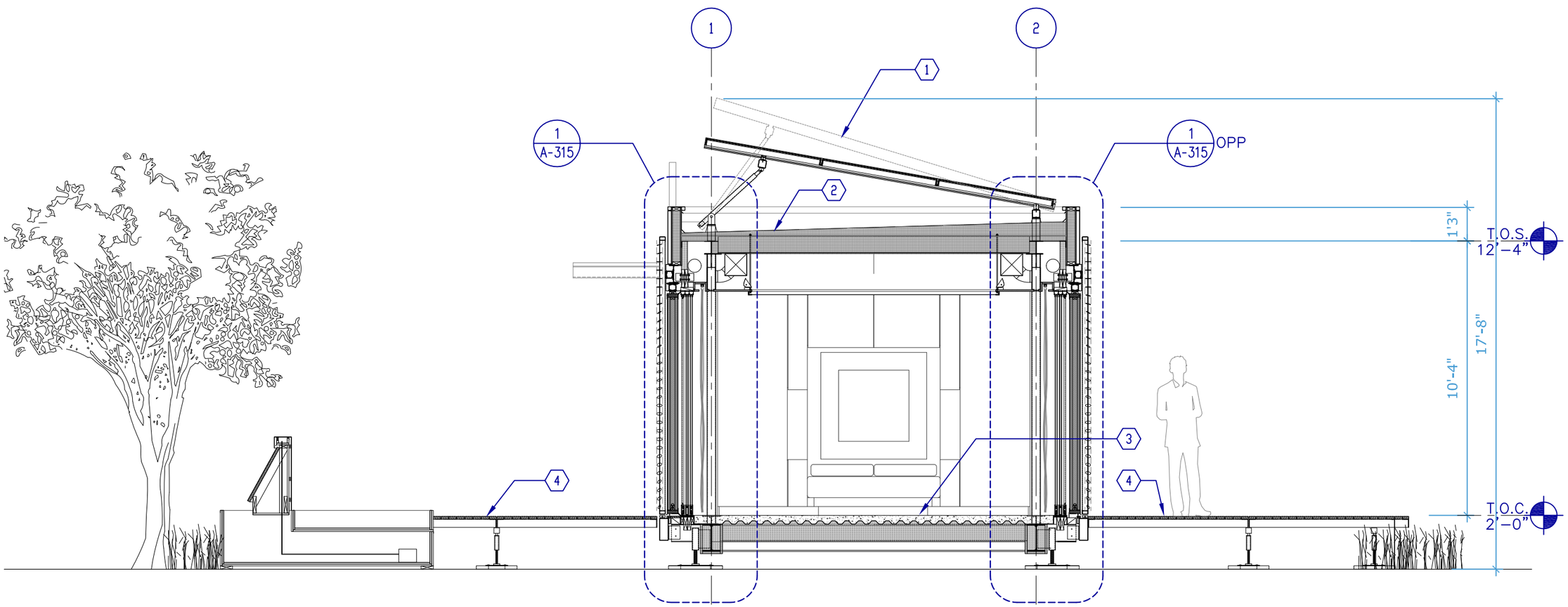

1 / A-313 SECTION @ BEDROOM

SCALE: 1/4" = 1'-0"

0 5 10 15

lumenHAUS
a brighter way. everyday.

Decathlon 2009
www.lumenhaus.com

Virginia Tech **Solar Decathlon**
Virginia Polytechnic Institute and State University

Mark	Date	Description
CD	06.02.09	Final Submission
4	04.17.09	Clarification #2
3	03.27.09	Clarification #1
DD	02.20.09	Design Development

Solar Decathlon	2009
Date:	06.02.09
Drawn:	CEM + OO
Approved:	JHW

BUILDING SECTION

A-313

TEMPERATURE SENSORS

AUTOMATIC TEMPERATURE ADJUSTMENT FOR LOW ENERGY USE

USER CAN VIEW TEMPERATURE AND OVERRIDE SYSTEM IF DESIRED

SHEET KEYNOTES

1. OUT RIGGER BEAMS
2. POLISHED CONCRETE FLOOR
3. LIGHT FIXTURES

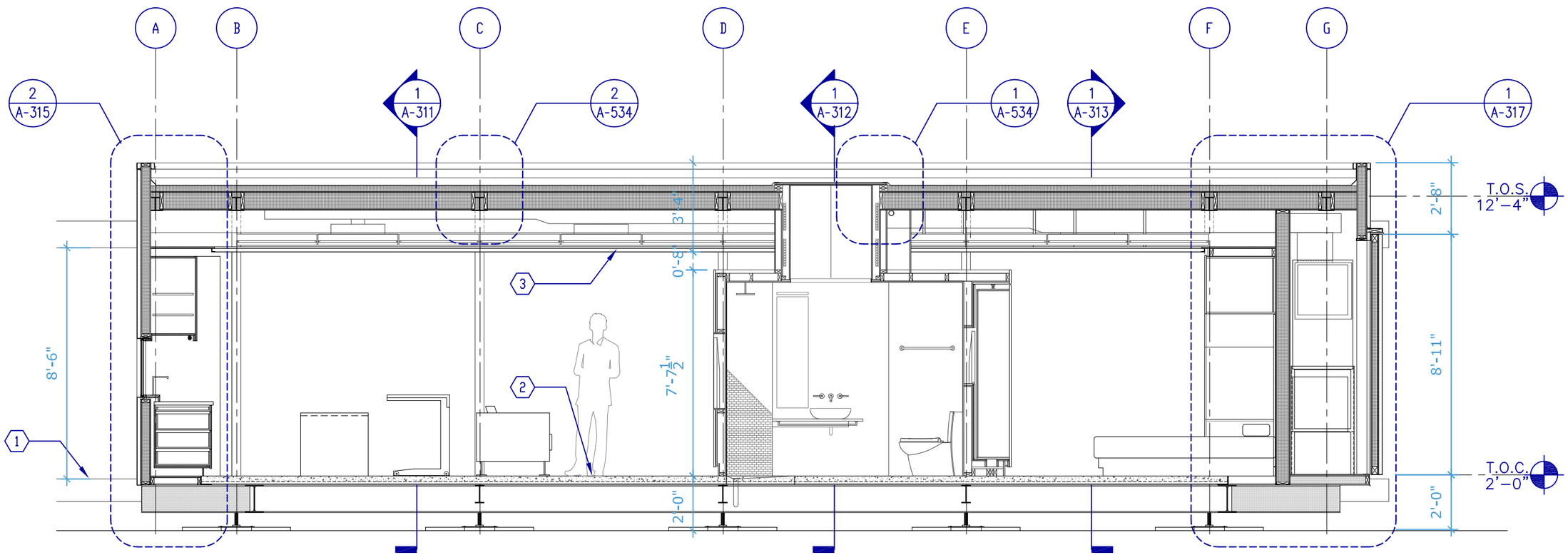

1
A-314

LONGITUDINAL SECTION - NORTH

SCALE: 1/4" = 1'-0"

0 5 10 15

lumenHAUS
a brighter way. everyday.

Virginia Tech **Solar Decathlon 2009**
www.lumenhaus.com
Virginia Polytechnic Institute and State University

Mark	Date	Description
CD	06.02.09	Final Submission
4	04.17.09	Clarification #2
3	03.27.09	Clarification #1
DD	02.20.09	Design Development

Solar Decathlon	2009
Date:	06.02.09
Drawn:	CEM + OO
Approved:	JHW

BUILDING SECTION

A-314

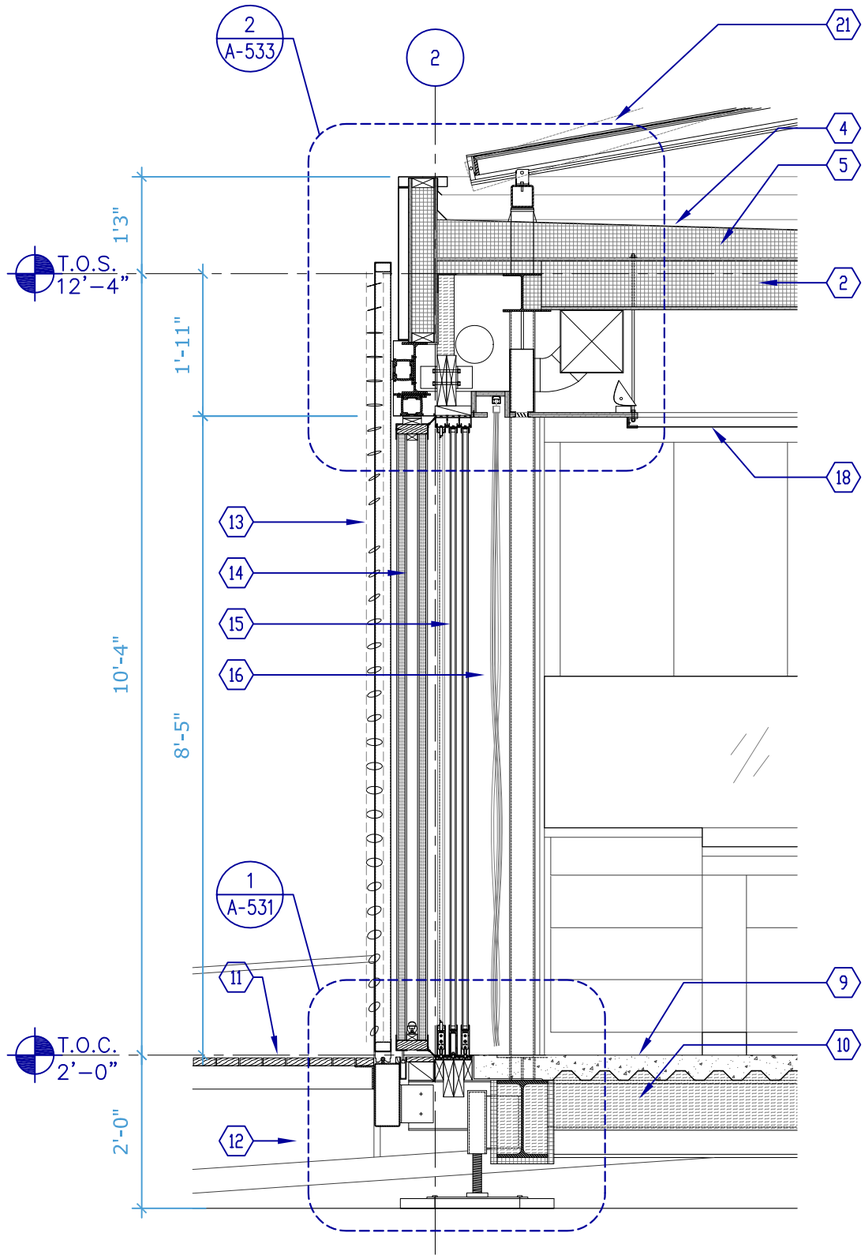

1 A-315 WALL SECTION

SCALE: 1/2" = 1'-0"

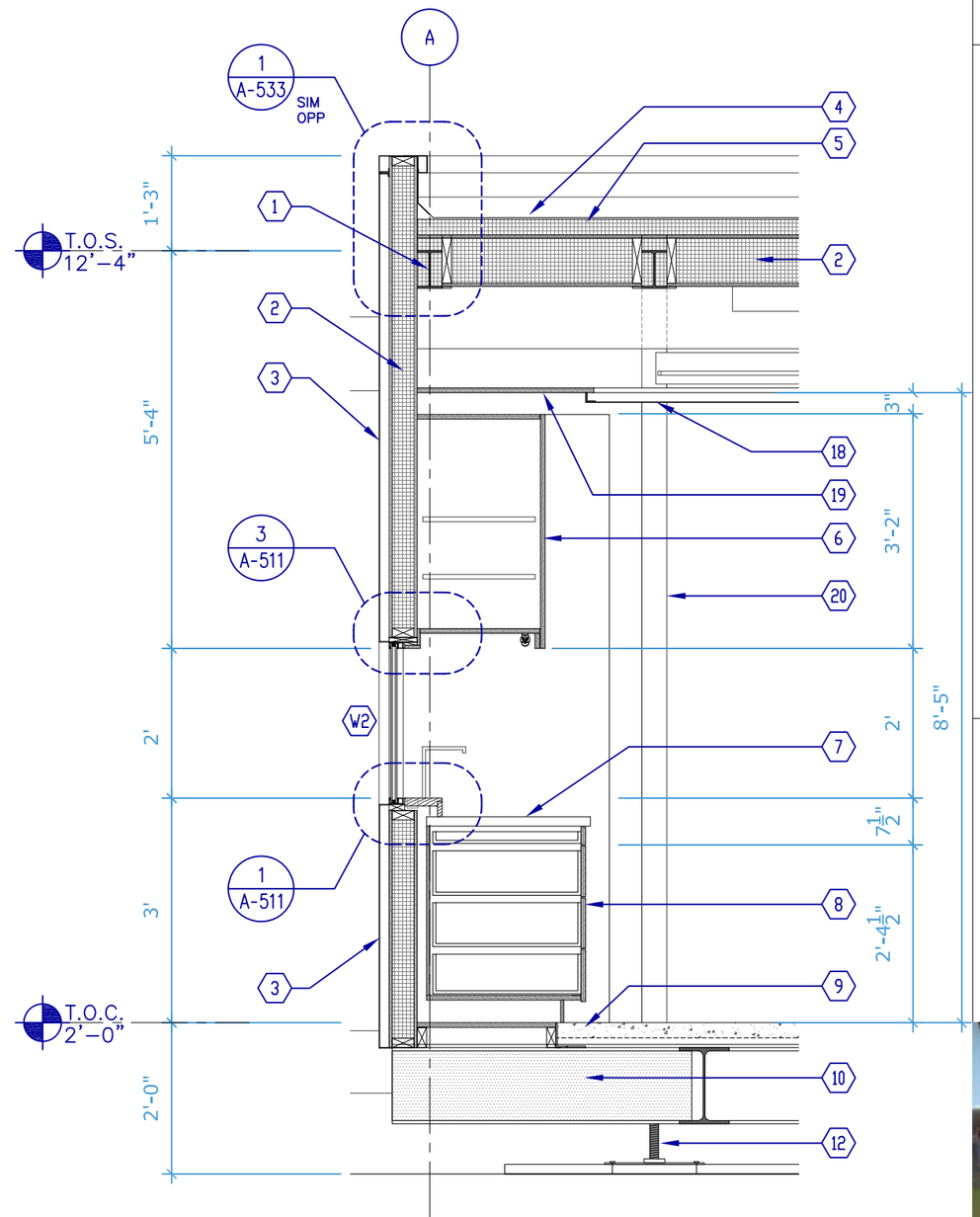

2 A-315 WALL SECTION

SCALE: 1/2" = 1'-0"

SHEET KEYNOTES

1. STEEL BEAM
2. SIPS PANEL
3. METAL PANEL
4. ROOFING
5. TAPERED INSULATION
6. CABINET
7. COUNTER
8. BASE CABINET
9. CONCRETE FLOOR
10. SPRAY ON INSULATION
11. GRAY WATER POOL
12. ADJUSTABLE SUPPORT
13. METAL SCREEN
14. POLYCARBONATE PANEL
15. INSULATED GLASS PANEL
16. AUTOMATED CURTAIN SYSTEM
17. WOOD DECKING
18. STRETCHED FABRIC
19. PLYWOOD SOFFIT
20. COLUMN BEYOND
21. PV PANEL

SHUTTER SHADES

BLOCKS DIRECT SUNLIGHT

STEEL FABRICATION

RECYCLABLE MATERIAL

ADJUSTABLE FOR SUN COLLECTION AND USER PREFERENCE

lumenHAUS
a brighter way. everyday.

Virginia Tech Solar Decathlon 2009
www.lumenhaus.com
Virginia Polytechnic Institute and State University

Mark	Date	Description
CD	06.02.09	Final Submission
Δ	04.17.09	Clarification #2
Δ	03.27.09	Clarification #1
DD	02.20.09	Design Development

Solar Decathlon	2009
Date:	06.02.09
Drawn:	CEM + OO
Approved:	JHW

WALL SECTION

A-315

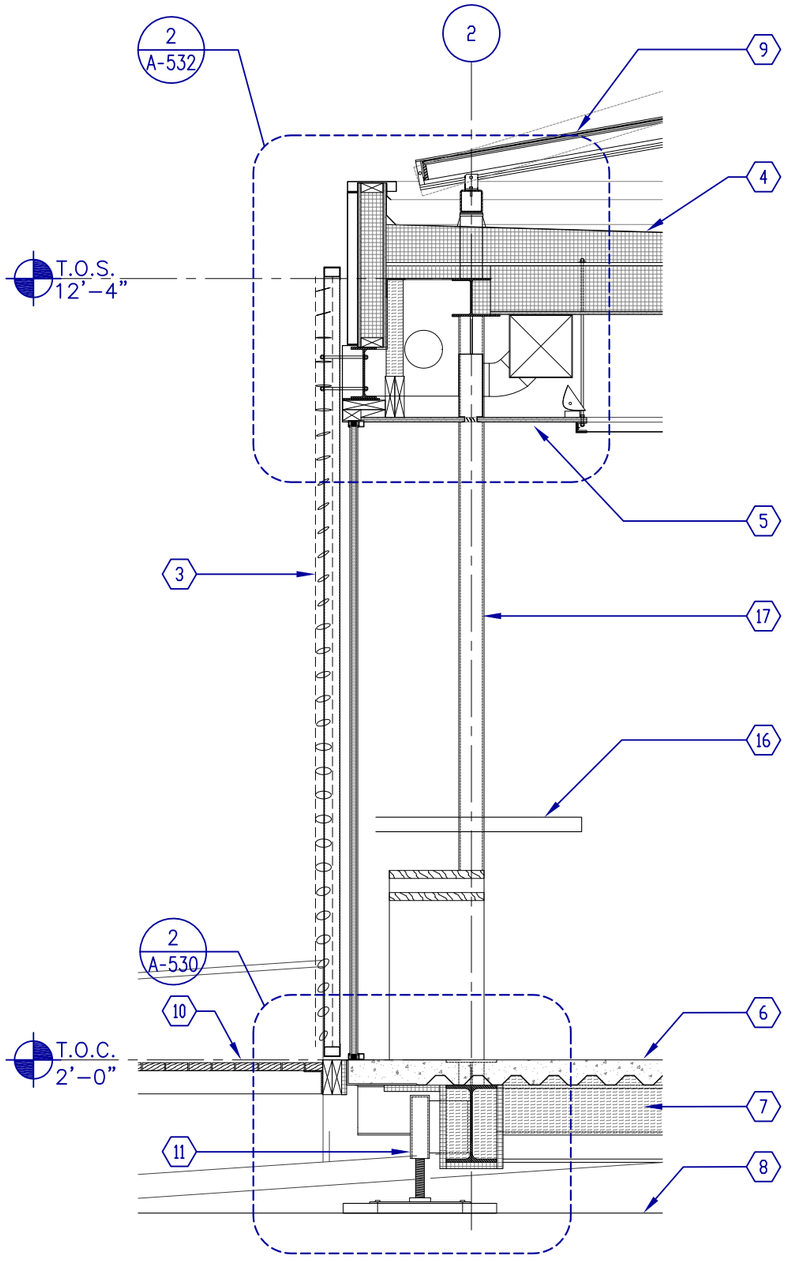

1 A-316 WALL SECTION
SCALE: 1/2" = 1'-0"

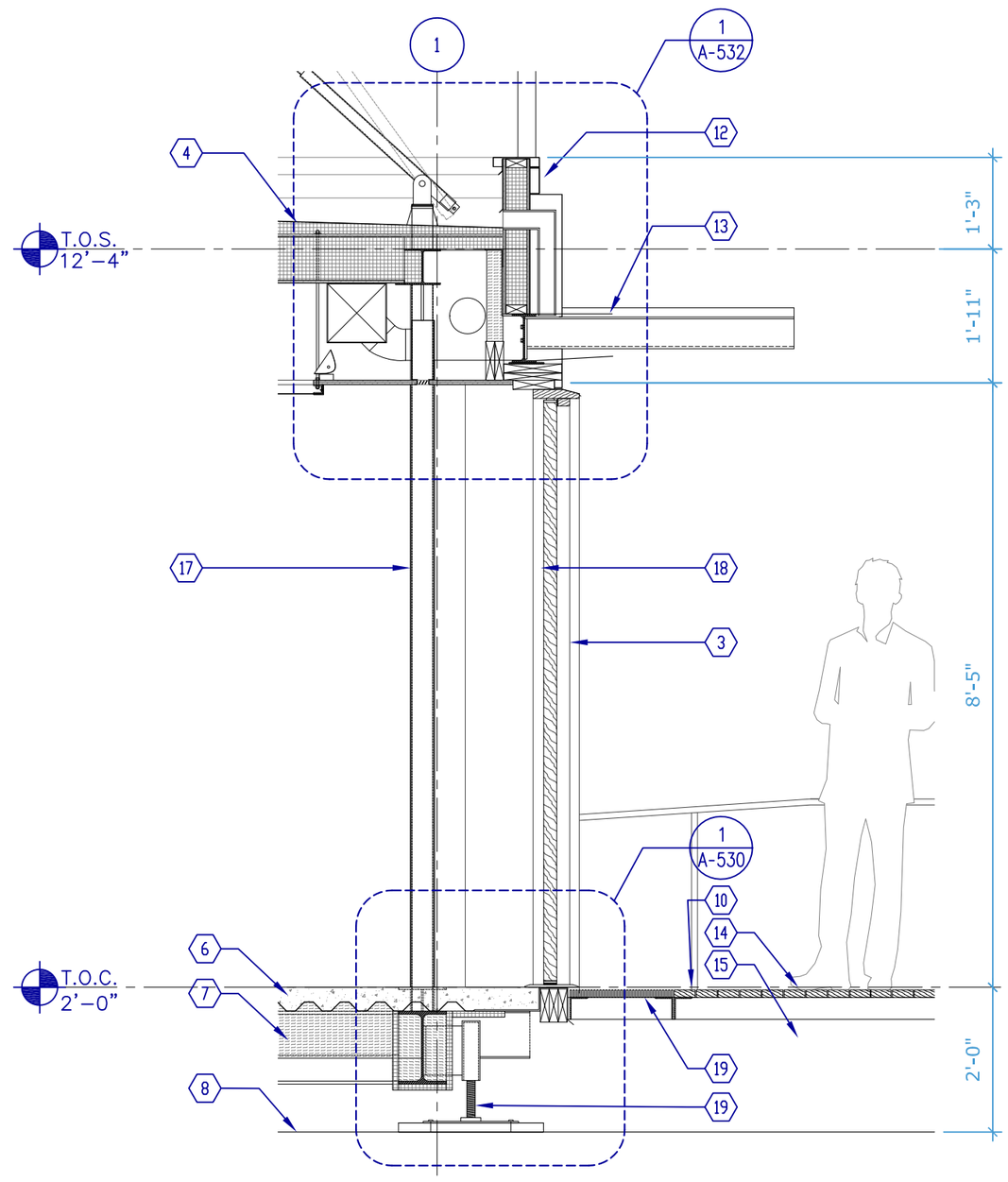

2 A-316 WALL SECTION
SCALE: 1/2" = 1'-0"

SHEET KEYNOTES

1. STEEL BEAM
2. SIPS PANEL
3. METAL PANEL
4. ROOFING ON TAPERED INSULATION
5. PLYWOOD SOFFIT
6. CONCRETE FLOOR
7. SPRAY INSULATION
8. FINISH GRADE
9. PV PANEL
10. WOOD DECKING
11. ADJUSTABLE SUPPORT
12. SCUPPER
13. CANOPY
14. METAL GRILL
15. WATER STORAGE TANK
16. DESK
17. COLUMN BEYOND
18. ENTRY DOOR
19. METAL WALK-OFF GRILL

INSULATION PANEL

POLYCARBONATE PANELS

PERMIT LIGHT TRANSMISSION

PROVIDE SUPERIOR INSULATION

LIGHTWEIGHT AND 200X MORE IMPACT RESISTANT THAN GLASS

RECYCLABLE AND DOWNCYCLABLE

FILLED WITH NANOGEL (CABOT) FOR INSULATION

lumenHAUS
a brighter way. everyday.

Virginia Tech Solar Decathlon 2009
Virginia Polytechnic Institute and State University
www.lumenhaus.com

Mark	Date	Description
CD	06.02.09	Final Submission
4	04.17.09	Clarification #2
3	03.27.09	Clarification #1
DD	02.20.09	Design Development

Solar Decathlon	2009
Date:	06.02.09
Drawn:	CEM + OO
Approved:	JHW

WALL SECTION
A-316

STRUCTURAL INSULATED PANELS

PROVIDE INSULATION

HIGH R–VALUE

HELPS MAINTAIN INTERIOR TEMPERATURE

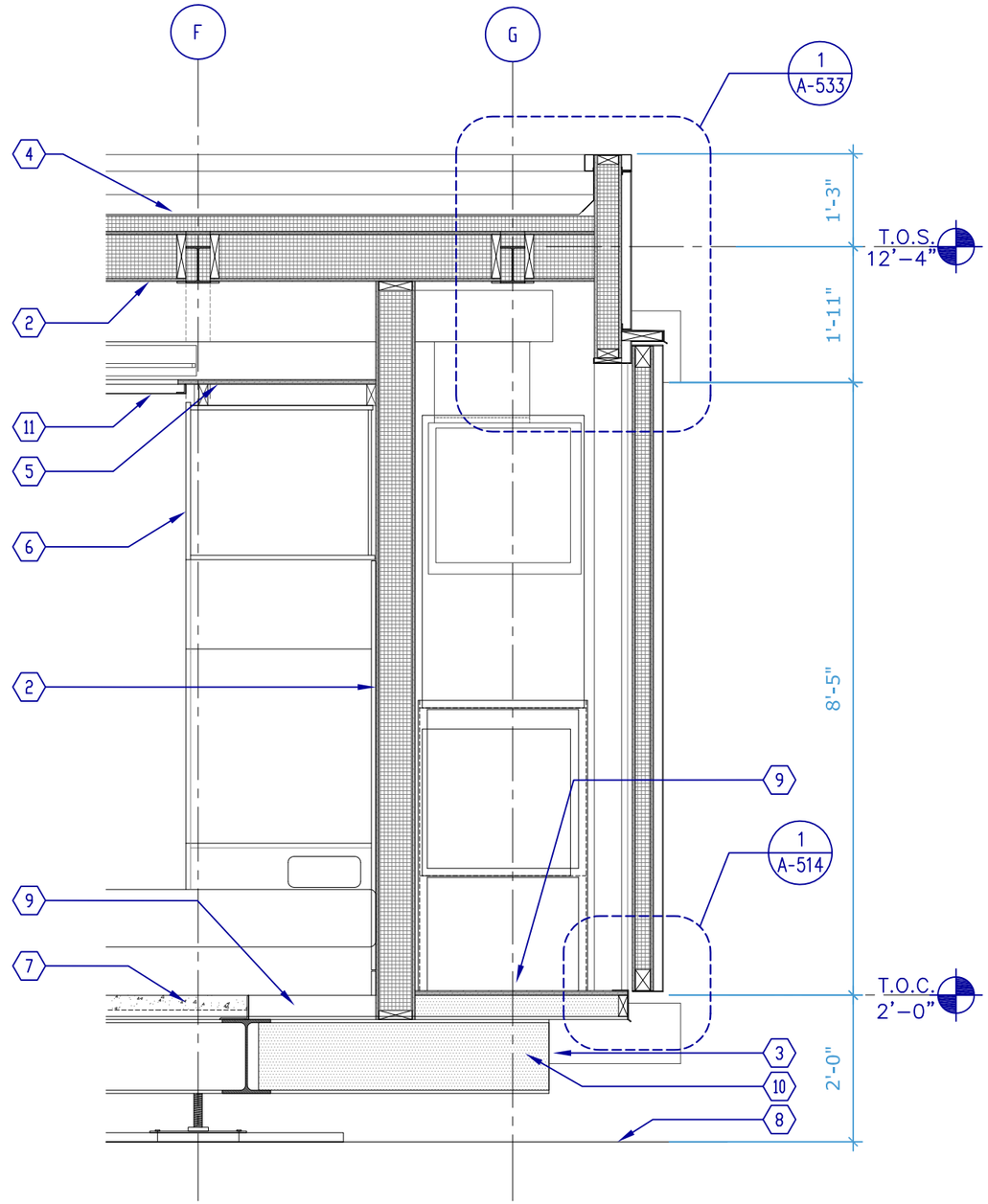

1 A-317 WALL SECTION

SCALE: 1/2" = 1'-0"

SHEET KEYNOTES

1. STEEL BEAM
2. SIPS PANEL
3. METAL PANEL
4. ROOFING ON TAPERED INSULATION
5. PLYWOOD SOFFIT
6. WOOD CABINET
7. CONCRETE FLOOR
8. FINISH GRADE
9. PLYWOOD ON WOOD STUD FRAMING
10. SPRAY ON INSULATION
11. STRETCHED FABRIC

lumenHAUS a brighter way. everyday.

Virginia Tech **Solar Decathlon 2009**

Virginia Polytechnic Institute and State University

www.lumenhaus.com

Mark	Date	Description
CD	06.02.09	Final Submission
4	04.17.09	Clarification #2
3	03.27.09	Clarification #1
DD	02.20.09	Design Development

Solar Decathlon	2009
Date:	06.02.09
Drawn:	CEM + OO
Approved:	JHW

WALL SECTION

A-317

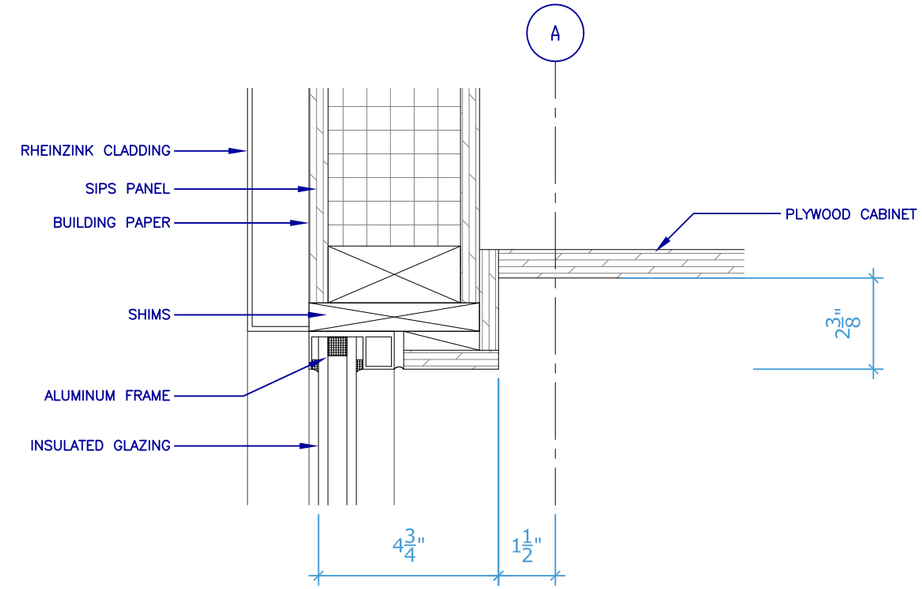

3 / A-511 **WINDOW HEAD DETAIL**
SCALE: 3" = 1'-0"

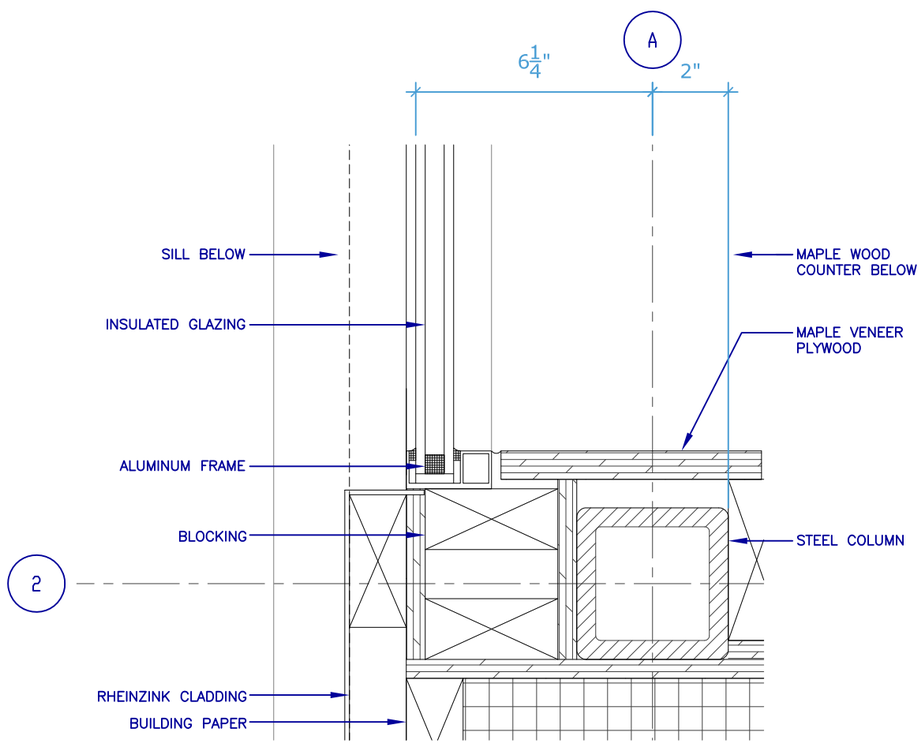

2 / A-511 **WINDOW JAMB DETAIL**
SCALE: 3" = 1'-0"

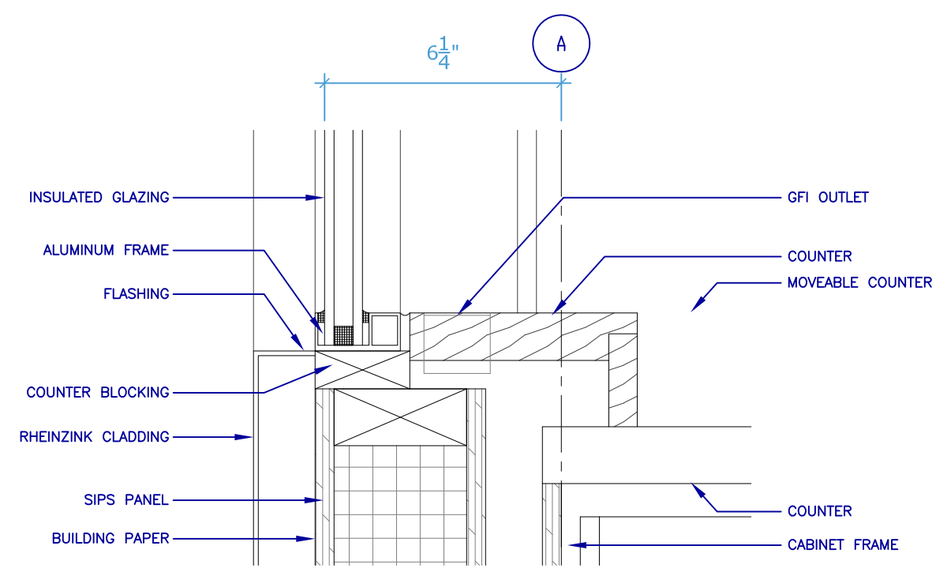

1 / A-511 **WINDOW SILL DETAIL**
SCALE: 3" = 1'-0"

lumenHAUS
a brighter way. everyday.

Virginia Tech Solar Decathlon 2009
www.lumenhaus.com
Virginia Polytechnic Institute and State University

Mark	Date	Description
CD	06.02.09	Final Submission
4	04.17.09	Clarification #2
3	03.27.09	Clarification #1
DD	02.20.09	Design Development

Solar Decathlon	2009
Date:	06.02.09
Drawn:	CEM + OO
Approved:	JHW

WINDOW DETAIL
A-511

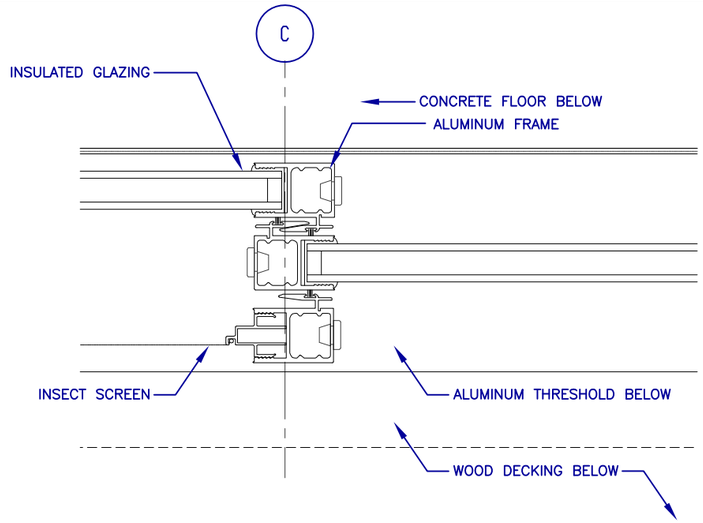

4 / A-512 MULLION DETAIL

SCALE: 3" = 1'-0"

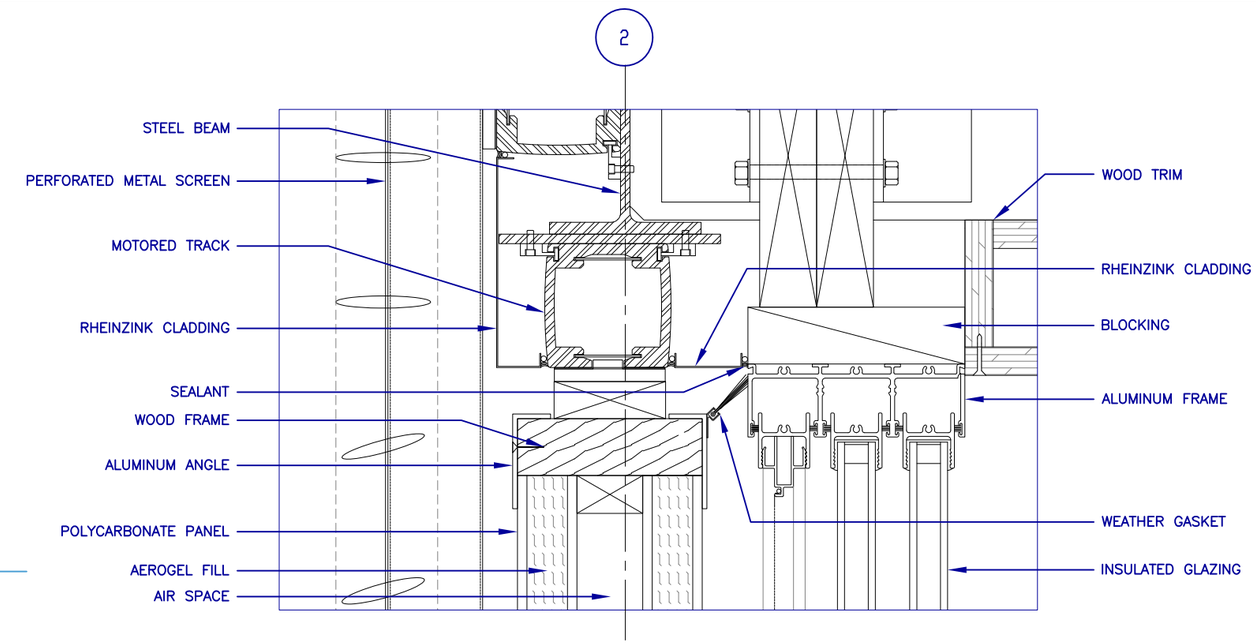

3 / A-512 HEAD DETAIL

SCALE: 3" = 1'-0"

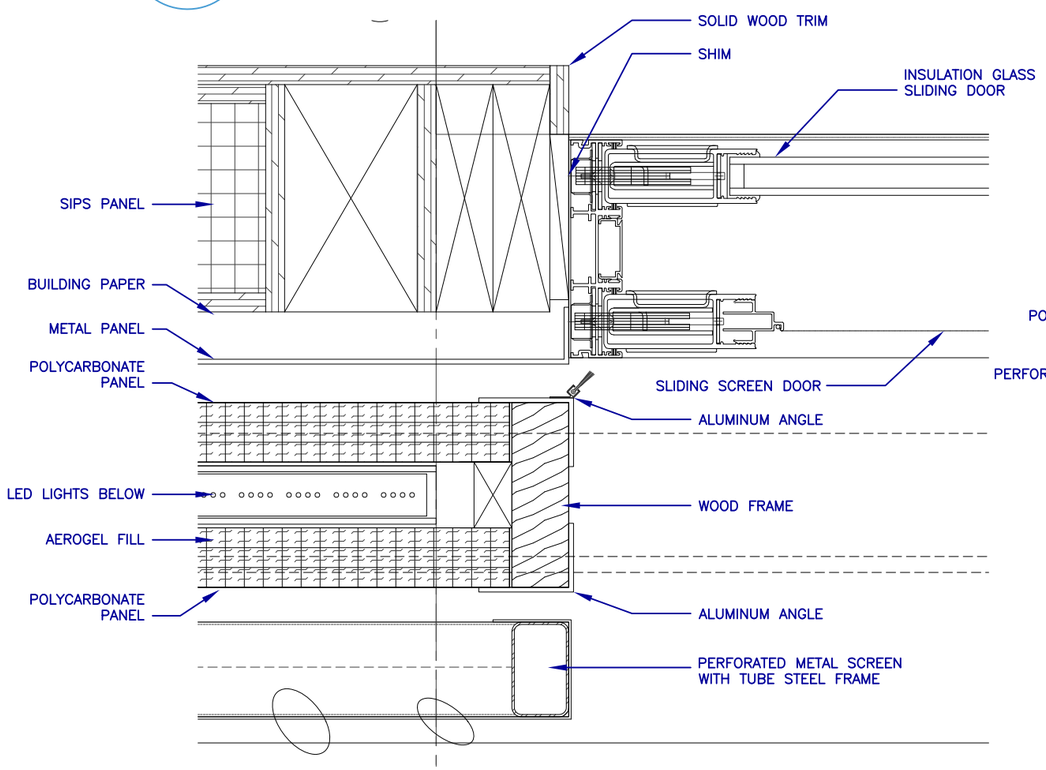

2 / A-512 JAMB DETAIL

SCALE: 3" = 1'-0"

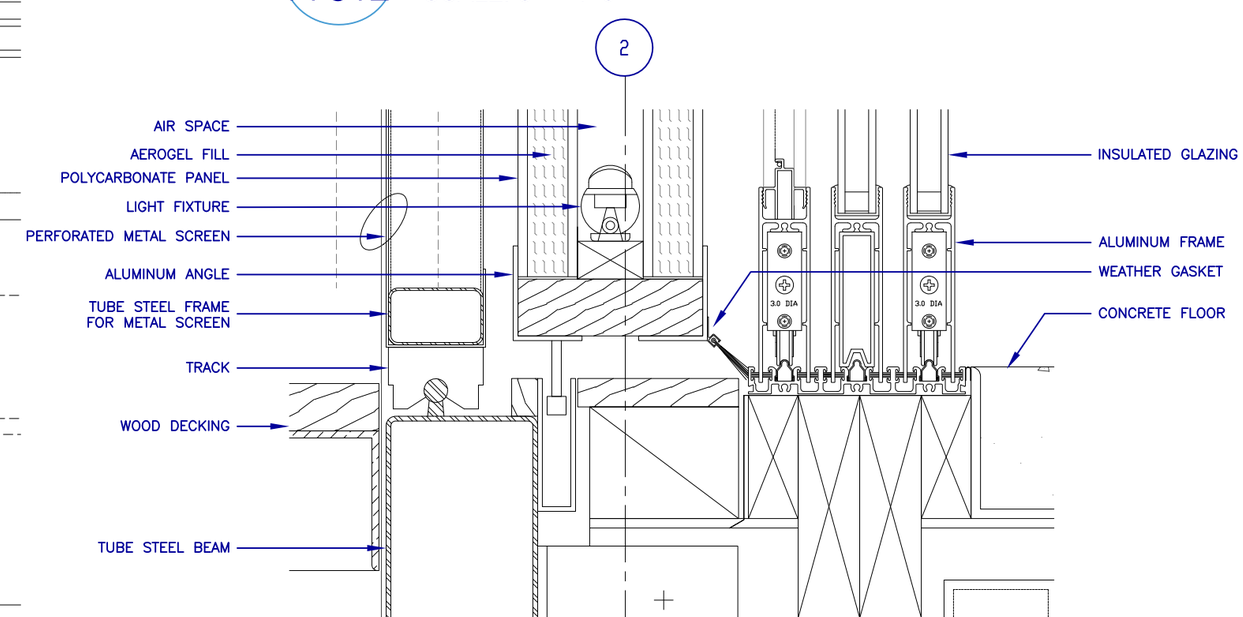

1 / A-512 SILL DETAIL

SCALE: 3 = 1'-0"

lumenHAUS
a brighter way. everyday.

Virginia Tech Solar Decathlon 2009
www.lumenhaus.com
Virginia Polytechnic Institute and State University

Mark	Date	Description
CD	06.02.09	Final Submission
Δ	04.17.09	Clarification #2
Δ	03.27.09	Clarification #1
DD	02.20.09	Design Development

Solar Decathlon	2009
Date:	06.02.09
Drawn:	CEM + OO
Approved:	JHW

DOOR DETAILS

A-512

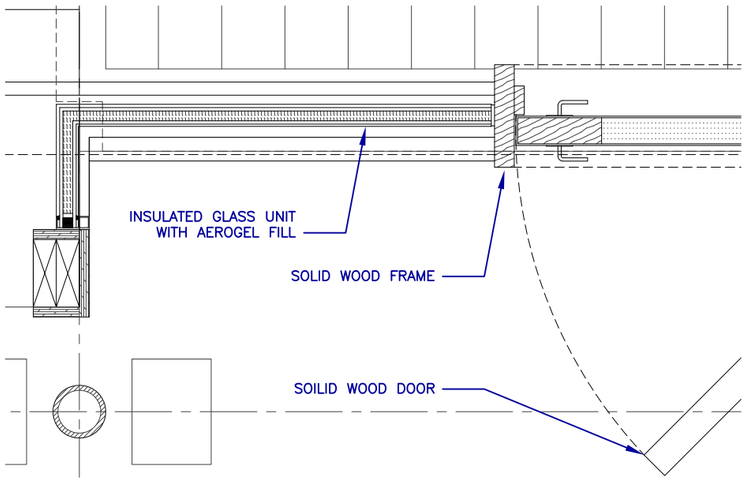

4 A-513 JAMB DETAIL
SCALE: 3" = 1'-0"

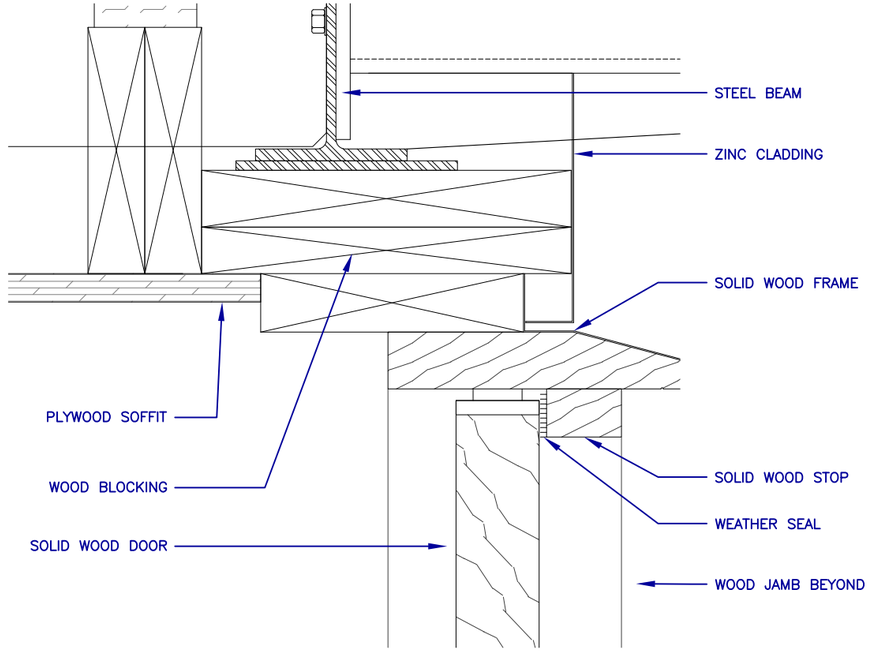

3 A-513 HEAD DETAIL
SCALE: 3" = 1'-0"

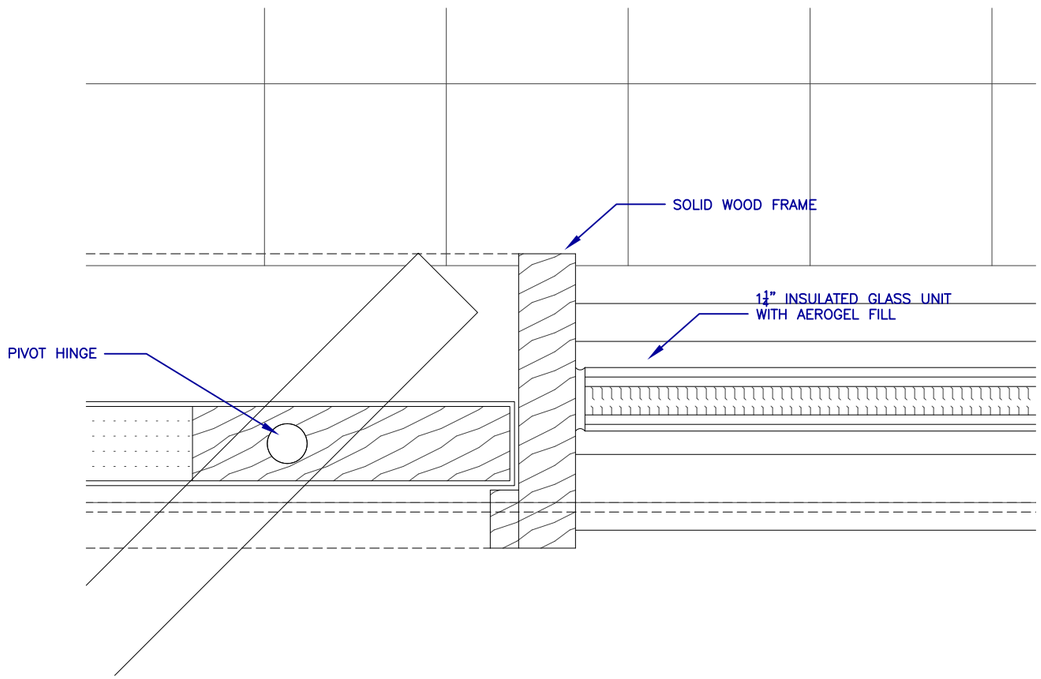

2 A-513 JAMB DETAIL
SCALE: 3" = 1'-0"

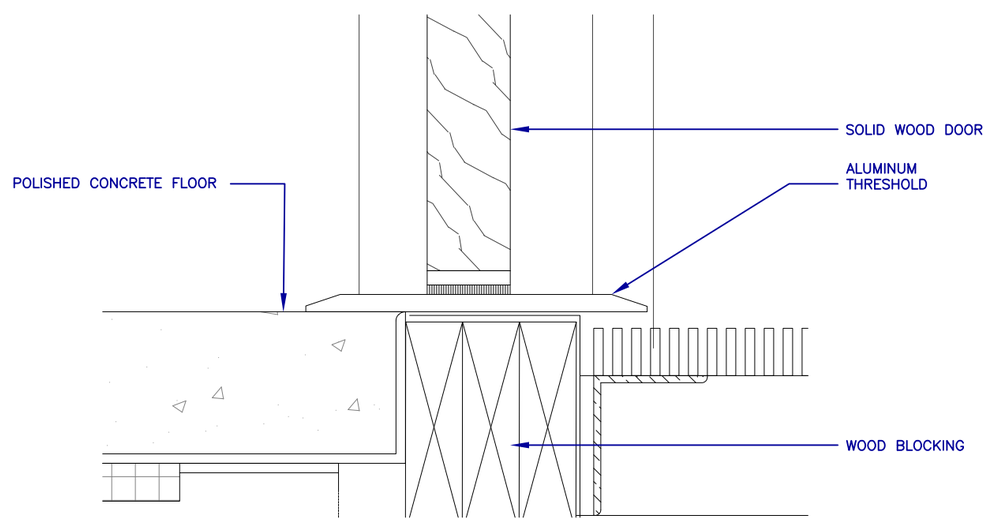

1 A-513 SILL DETAIL
SCALE: 3" = 1'-0"

lumenHAUS
a brighter way. everyday.

Virginia Tech **Solar Decathlon 2009**
www.lumenhaus.com
Virginia Polytechnic Institute and State University

Mark	Date	Description
CD	06.02.09	Final Submission
4	04.17.09	Clarification #2
3	03.27.09	Clarification #1
DD	02.20.09	Design Development

Solar Decathlon	2009
Date:	06.02.09
Drawn:	CEM + OO
Approved:	JHW

DOOR DETAILS

A-513

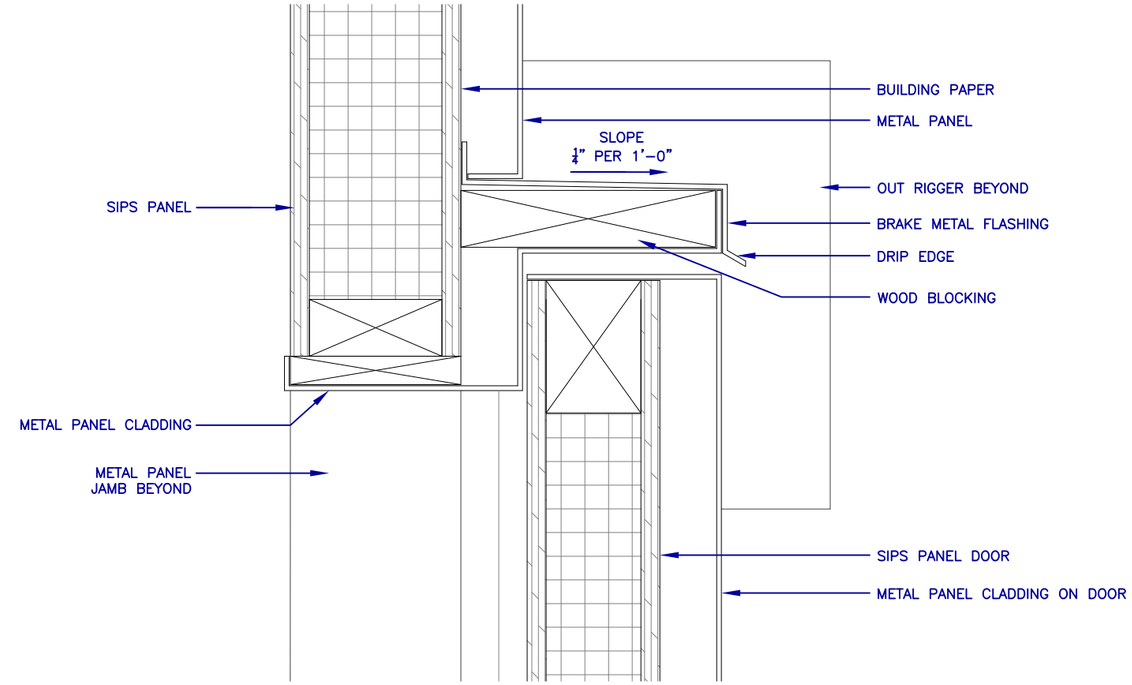

3 A-514 HEAD DETAIL
SCALE: 3" = 1'-0"

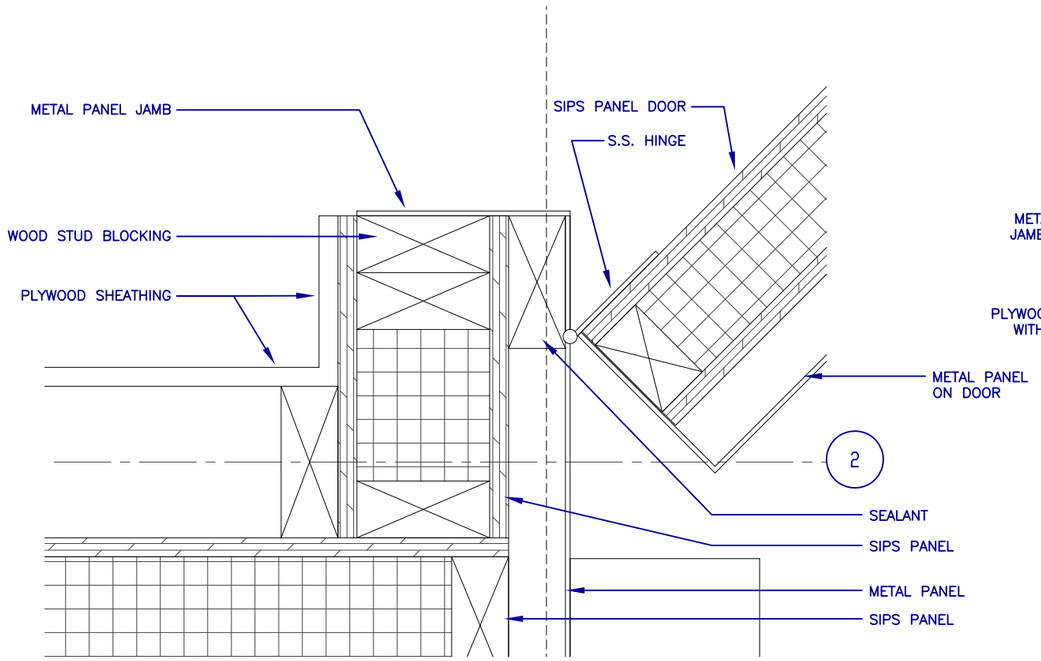

2 A-514 JAMB DETAIL
SCALE: 3" = 1'-0"

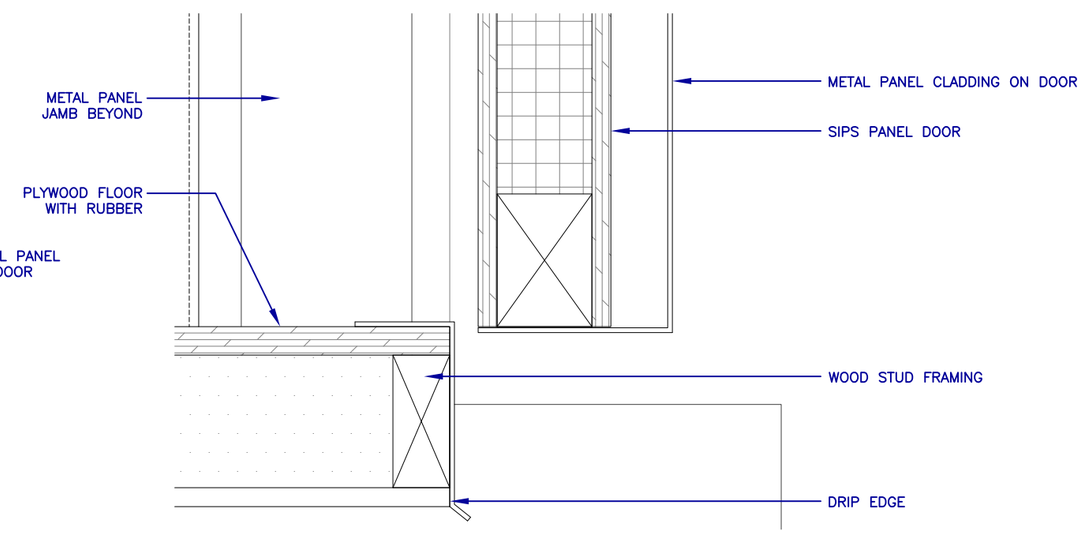

1 A-514 SILL DETAIL
SCALE: 3" = 1'-0"

lumenHAUS
a brighter way. everyday.

Virginia Tech **Solar Decathlon 2009**
www.lumenhaus.com
Virginia Polytechnic Institute and State University

Mark	Date	Description
CD	06.02.09	Final Submission
Δ	04.17.09	Clarification #2
Δ	03.27.09	Clarification #1
DD	02.20.09	Design Development

Solar Decathlon	2009
Date:	06.02.09
Drawn:	CEM + OO
Approved:	JHW

DOOR DETAILS

A-514

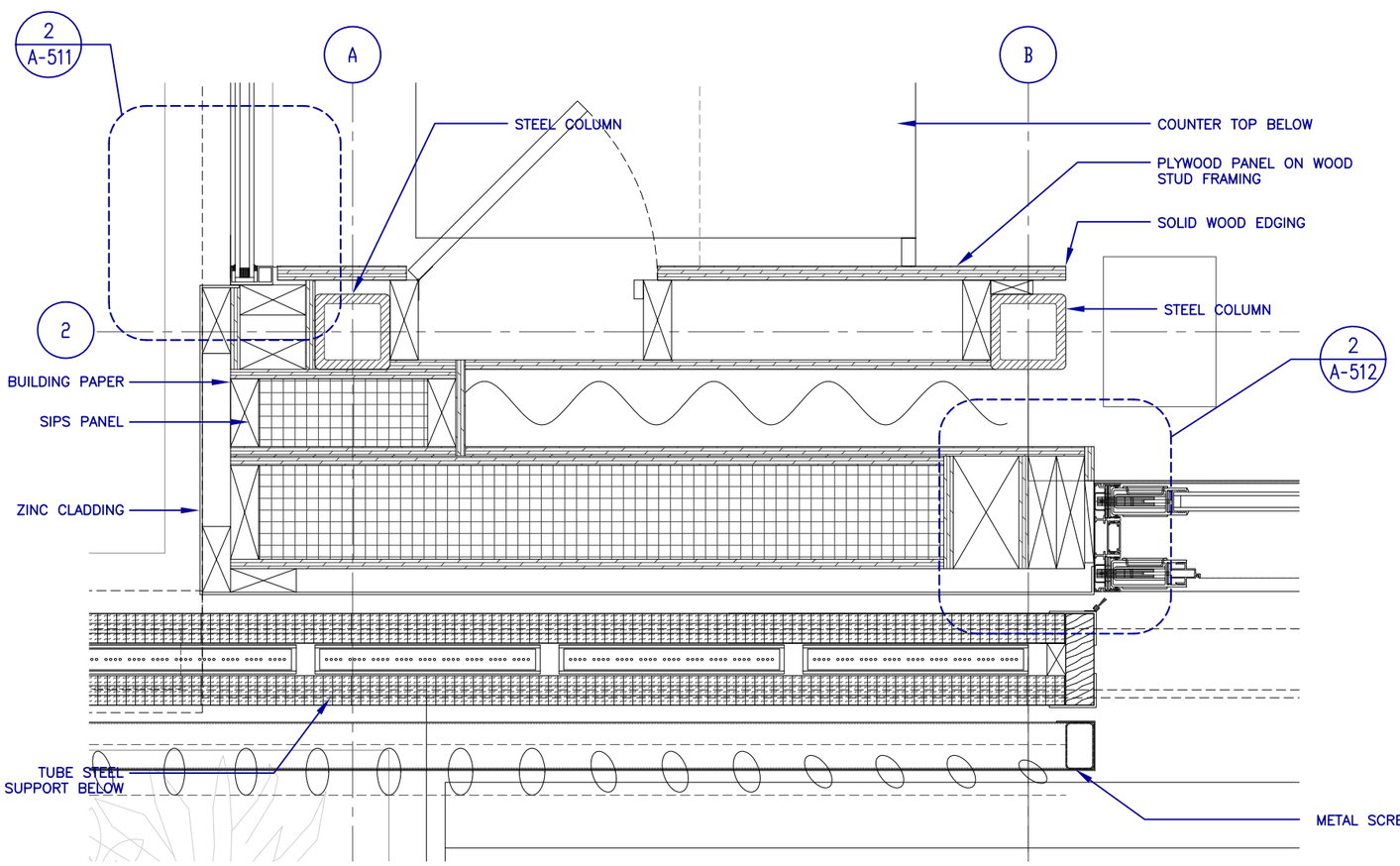

2 A-520 SECTION DETAIL

SCALE: 1 1/2" = 1'-0"

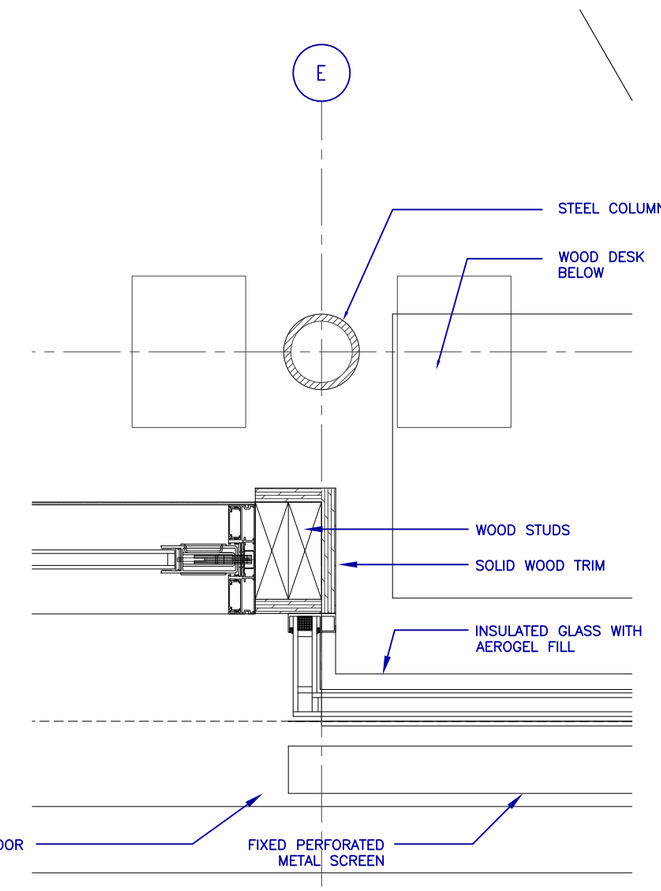

1 A-520 PLAN DETAIL

SCALE: 1 1/2" = 1'-0"

lumenHAUS
a brighter way. everyday.

Virginia Tech Solar Decathlon 2009
www.lumenhaus.com
Virginia Polytechnic Institute and State University

Mark	Date	Description
CD	06.02.09	Final Submission
4	04.17.09	Clarification #2
3	03.27.09	Clarification #1
DD	02.20.09	Design Development

Solar Decathlon	2009
Date:	06.02.09
Drawn:	CEM + OO
Approved:	JHW

PLAN DETAILS

A-520

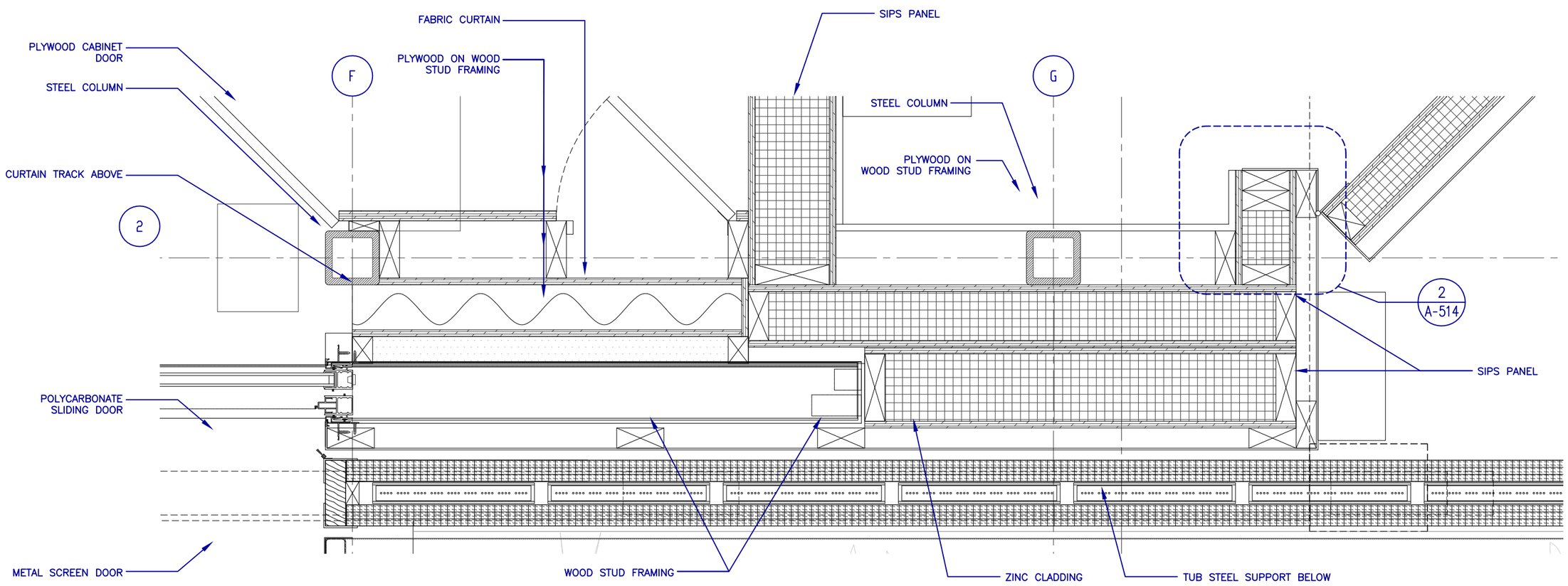

1 / A-521 PLAN DETAIL

SCALE: 1 1/2" = 1'-0"

lumenHAUS
a brighter way. everyday.

Virginia Tech Solar Decathlon 2009
www.lumenhaus.com
Virginia Polytechnic Institute and State University

Mark	Date	Description
CD	06.02.09	Final Submission
Δ	04.17.09	Clarification #2
Δ	03.27.09	Clarification #1
DD	02.20.09	Design Development

Solar Decathlon	2009
Date:	06.02.09
Drawn:	CEM + OO
Approved:	JHW

PLAN DETAILS

A-521

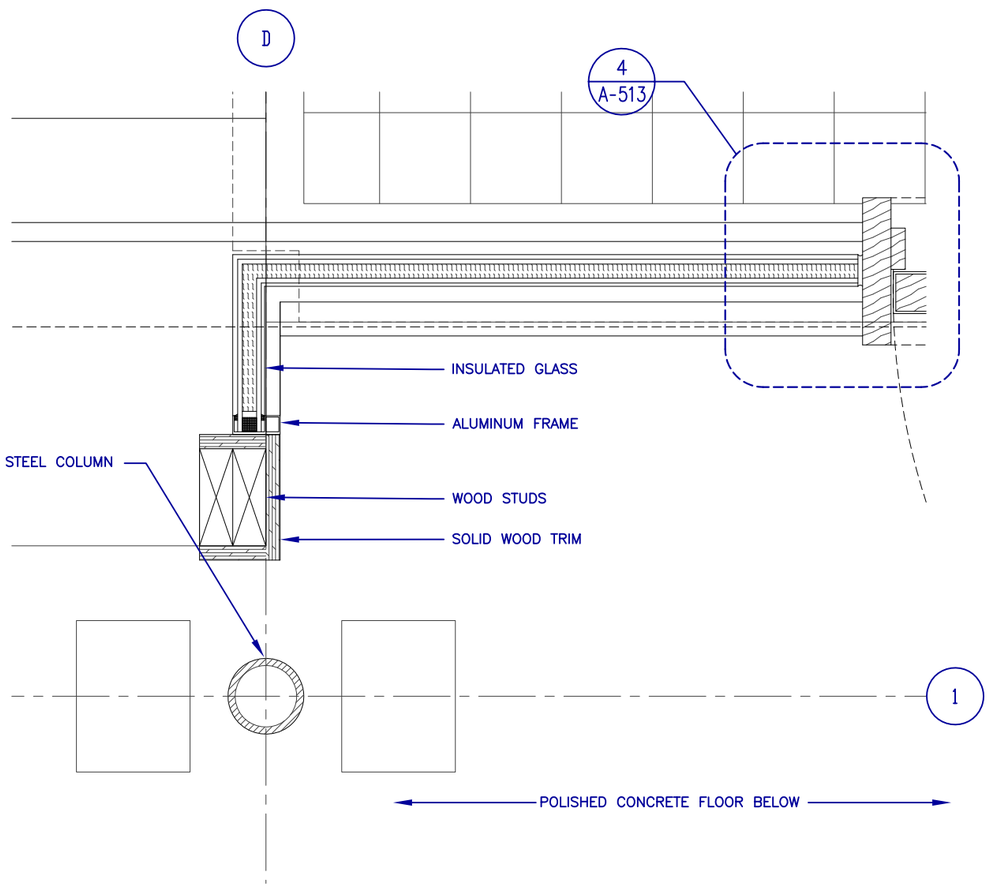

2 A-522 PLAN DETAIL

SCALE: 1 1/2" = 1'-0"

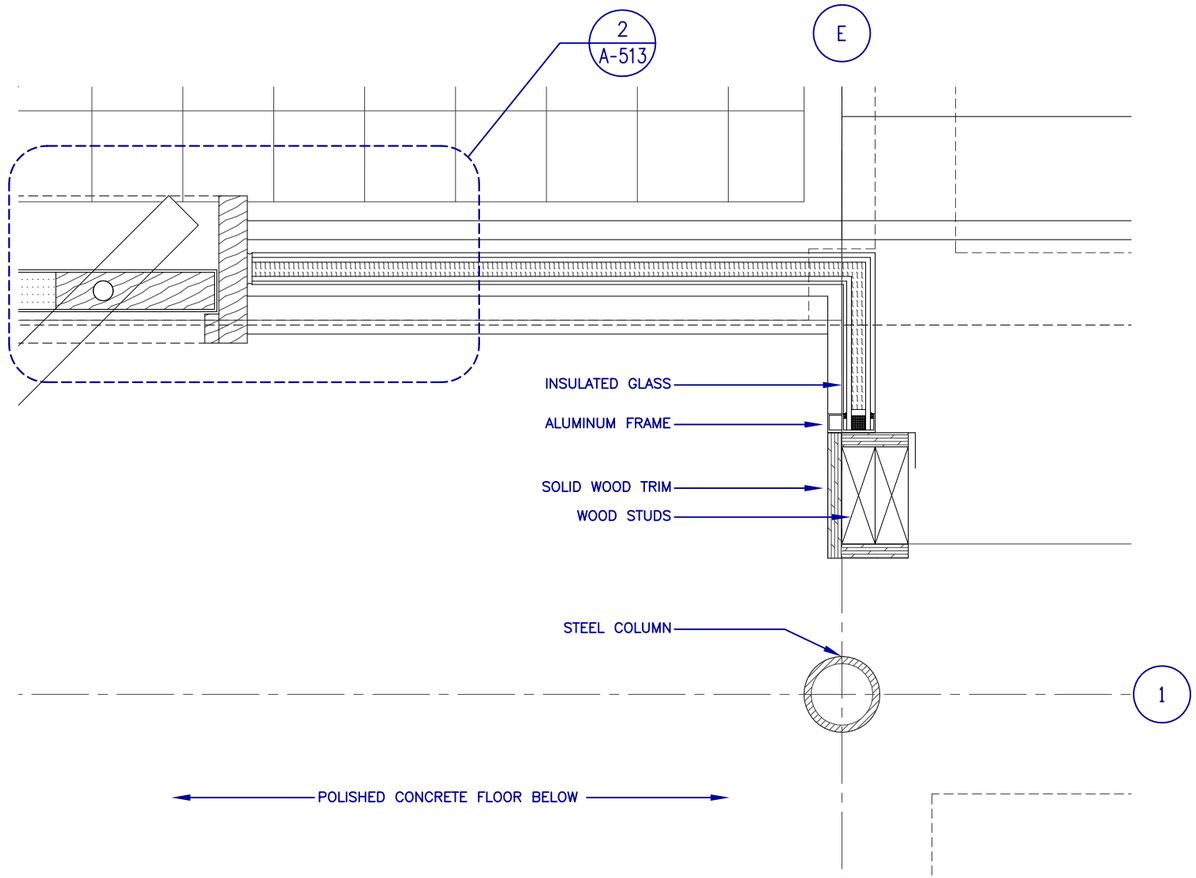

1 A-522 PLAN DETAIL

SCALE: 1 1/2" = 1'-0"

lumenHAUS
a brighter way. everyday.

Virginia Tech **Solar Decathlon 2009**
Virginia Polytechnic Institute and State University
www.lumenhaus.com

Mark	Date	Description
CD	06.02.09	Final Submission
4	04.17.09	Clarification #2
3	03.27.09	Clarification #1
DD	02.20.09	Design Development

Solar Decathlon	2009
Date:	06.02.09
Drawn:	CEM + OO
Approved:	JHW

PLAN DETAILS

A-522

WOOD DECKING

THERMALLY MODIFIED

IMPROVED DIMENSIONAL STABILITY AND DECAY RESISTANCE

HARVESTED FROM SUSTAINABLE FORESTS

NO ADDED CHEMICALS NEEDED FOR PRESERVATION

LOW MAINTENANCE AND DURABLE

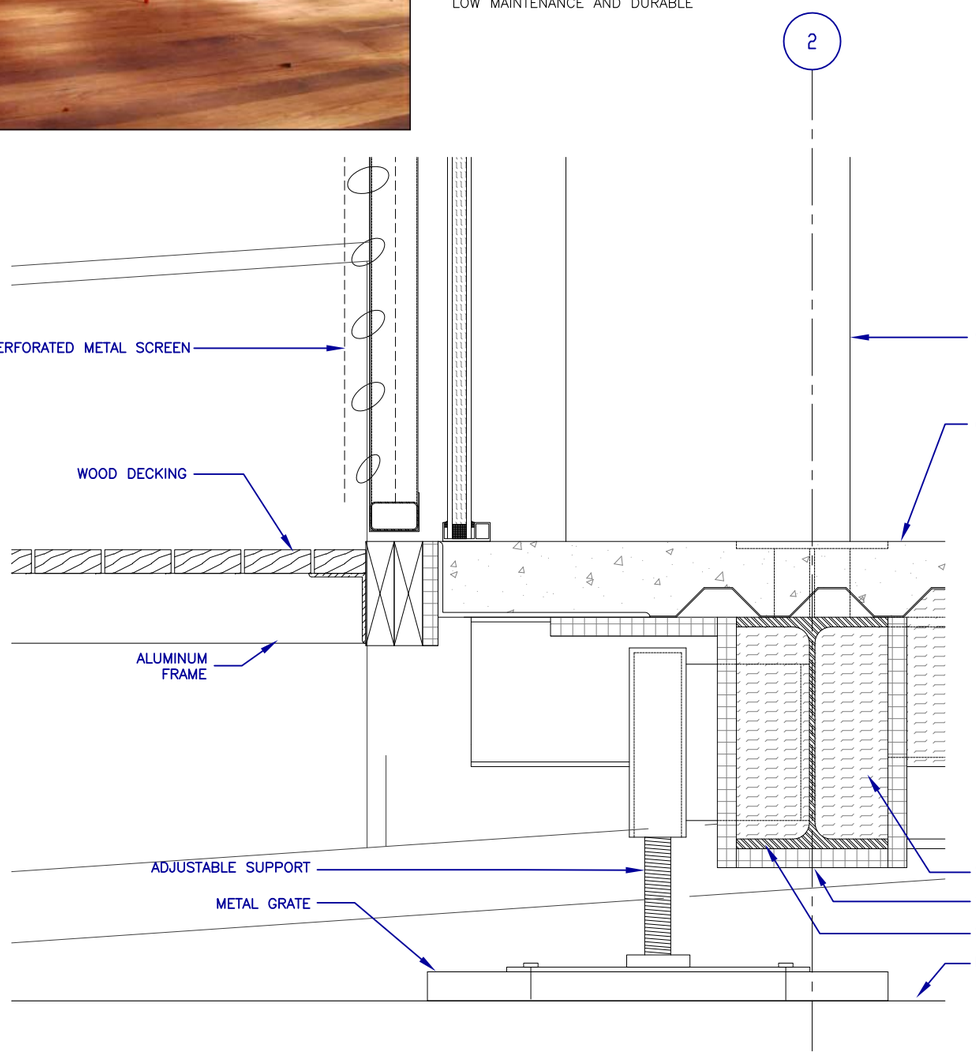

2 A-530 SECTION DETAIL

SCALE: 1 1/2" = 1'-0"

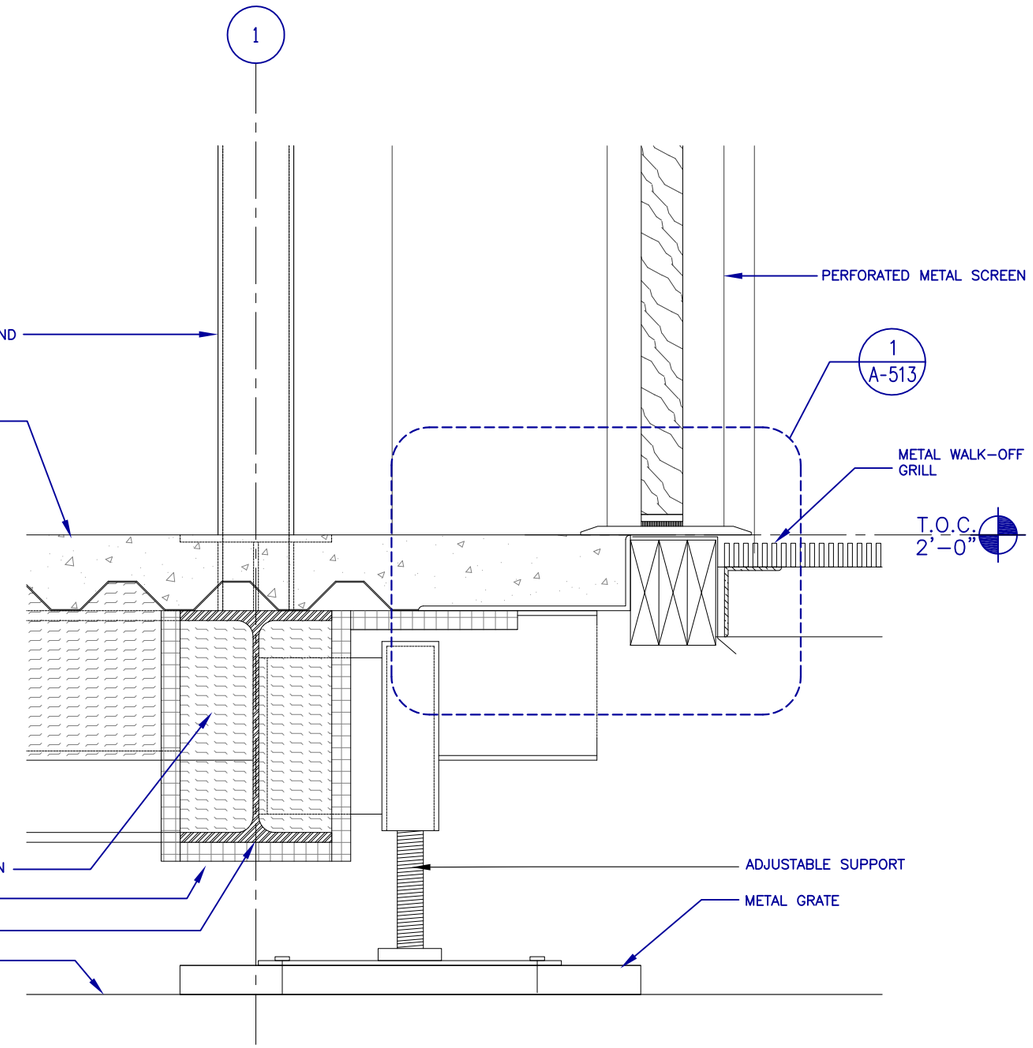

1 A-530 SECTION DETAIL

SCALE: 1 1/2" = 1'-0"

lumenHAUS
a brighter way. everyday.

Virginia Tech Solar Decathlon 2009
www.lumenhaus.com
Virginia Polytechnic Institute and State University

Mark	Date	Description
CD	06.02.09	Final Submission
4	04.17.09	Clarification #2
3	03.27.09	Clarification #1
DD	02.20.09	Design Development

Solar Decathlon	2009
Date:	06.02.09
Drawn:	CEM + OO
Approved:	JHW

SECTION DETAILS

A-530

CONCRETE FLOOR

LIGHTWEIGHT STRUCTURAL CONCRETE

FLY ASH AGGREGATE

GROUND AND POLISHED BY HTC SUPERFLOOR

REDUCED CONSTRUCTION AND TRANSPORTATION COST

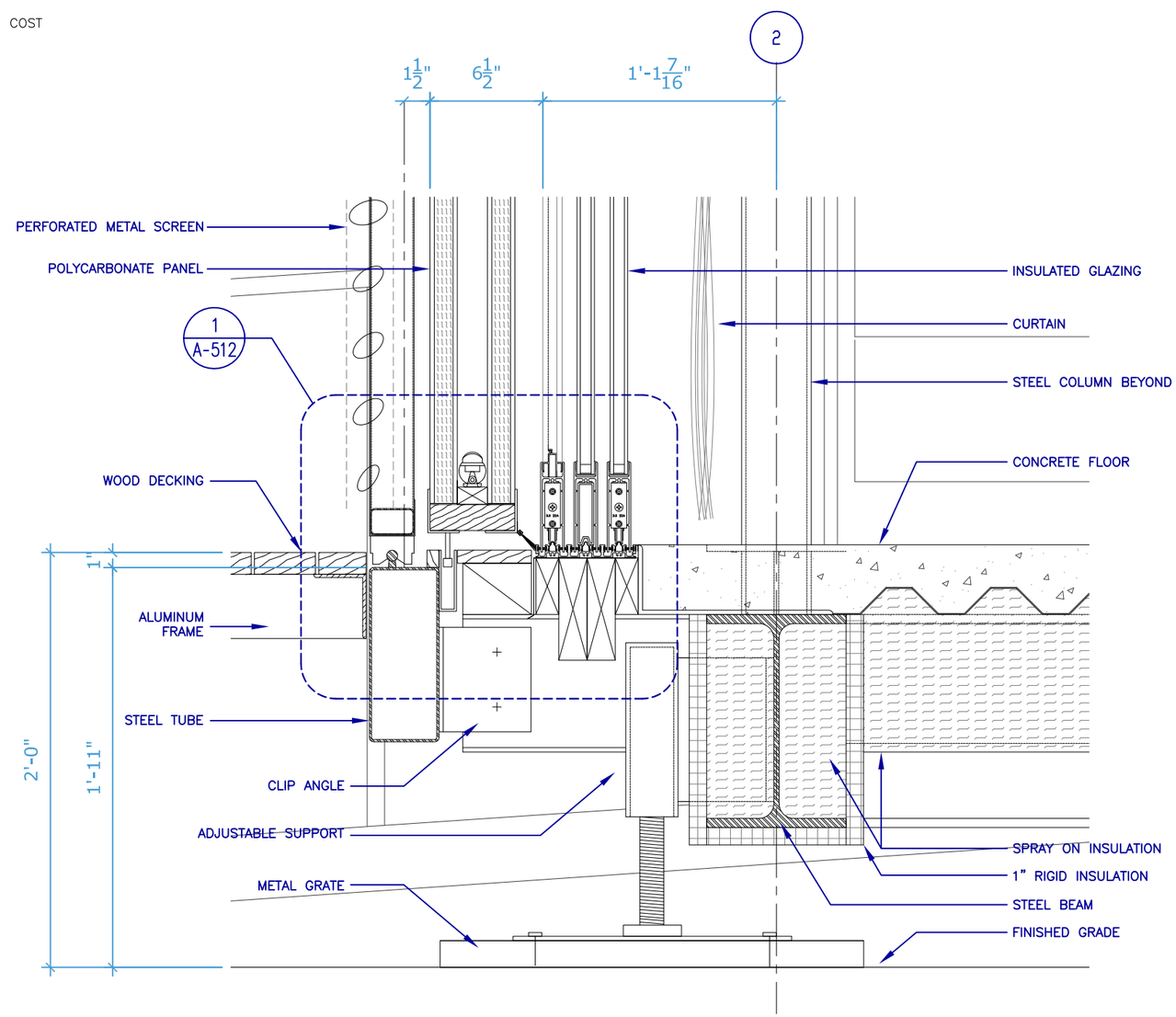

1
A-531

SECTION DETAIL

SCALE: 1 1/2" = 1'-0"

lumenHAUS
a brighter way. everyday.

Virginia Tech **Solar Decathlon 2009**
Virginia Polytechnic Institute and State University
www.lumenhaus.com

Mark	Date	Description
CD	06.02.09	Final Submission
4	04.17.09	Clarification #2
3	03.27.09	Clarification #1
DD	02.20.09	Design Development

Solar Decathlon	2009
Date:	06.02.09
Drawn:	CEM + 00
Approved:	JHW

SECTION DETAILS

A-531

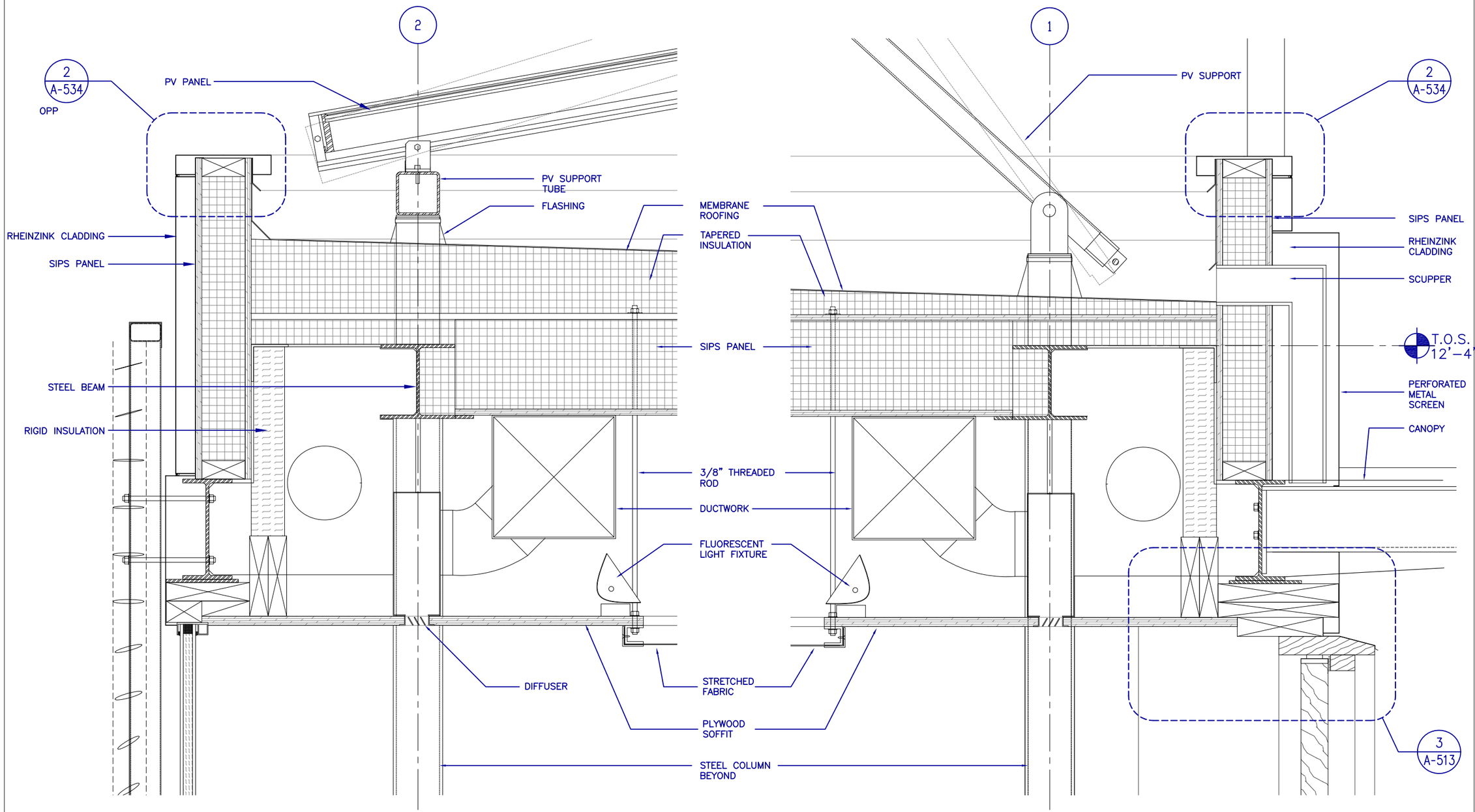

2 A-532 SECTION DETAIL

SCALE: 1 1/2" = 1'-0"

1 A-532 SECTION DETAIL

SCALE: 1 1/2" = 1'-0"

lumenHAUS
a brighter way. everyday.

Virginia Tech Solar Decathlon 2009
Virginia Polytechnic Institute and State University
www.lumenhaus.com

Mark	Date	Description
CD	06.02.09	Final Submission
4	04.17.09	Clarification #2
3	03.27.09	Clarification #1
DD	02.20.09	Design Development

Solar Decathlon	2009
Date:	06.02.09
Drawn:	CEM + OO
Approved:	JHW

SECTION DETAILS

A-532

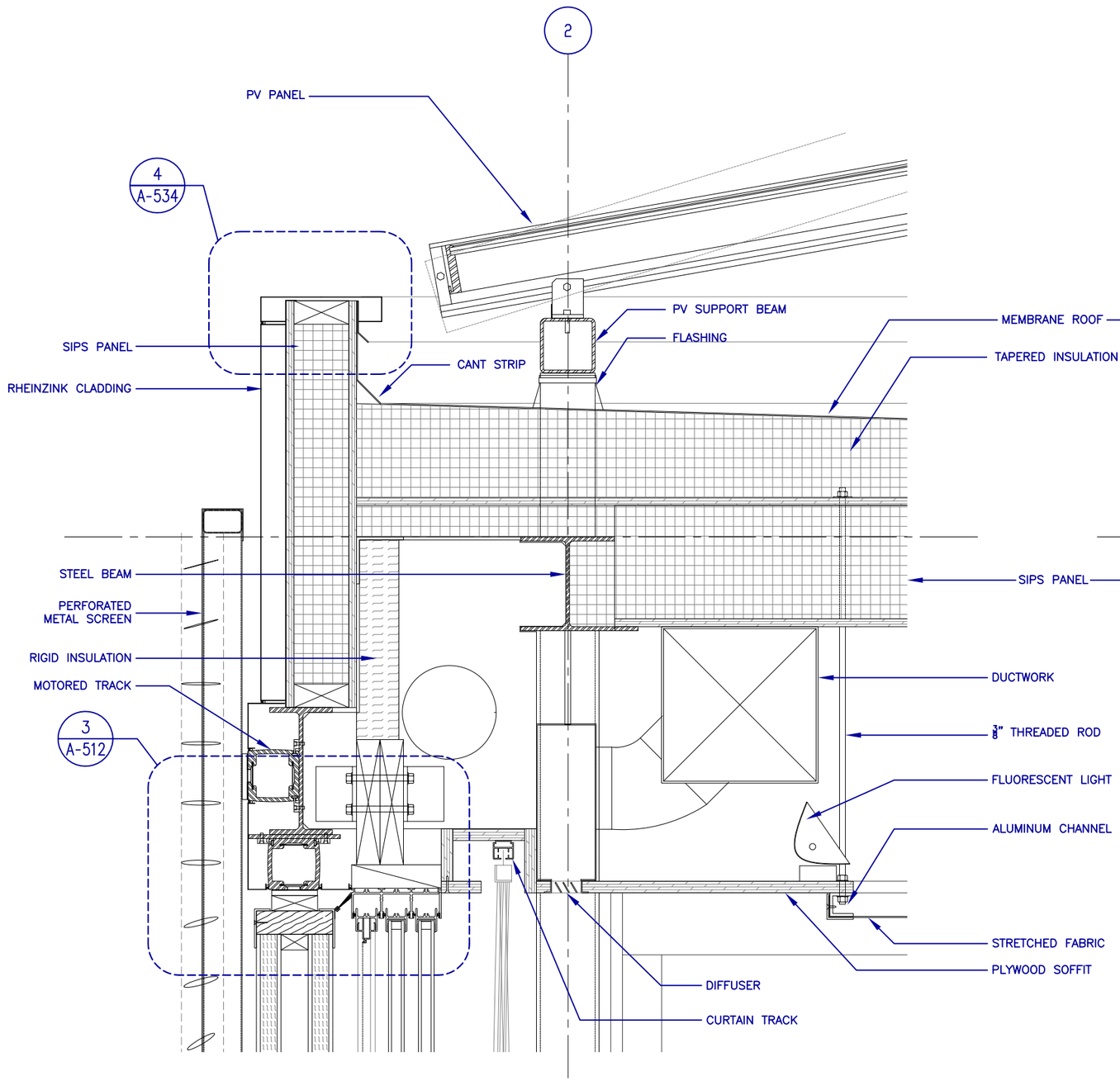

2 A-533 SECTION DETAIL

SCALE: 1 1/2" = 1'-0"

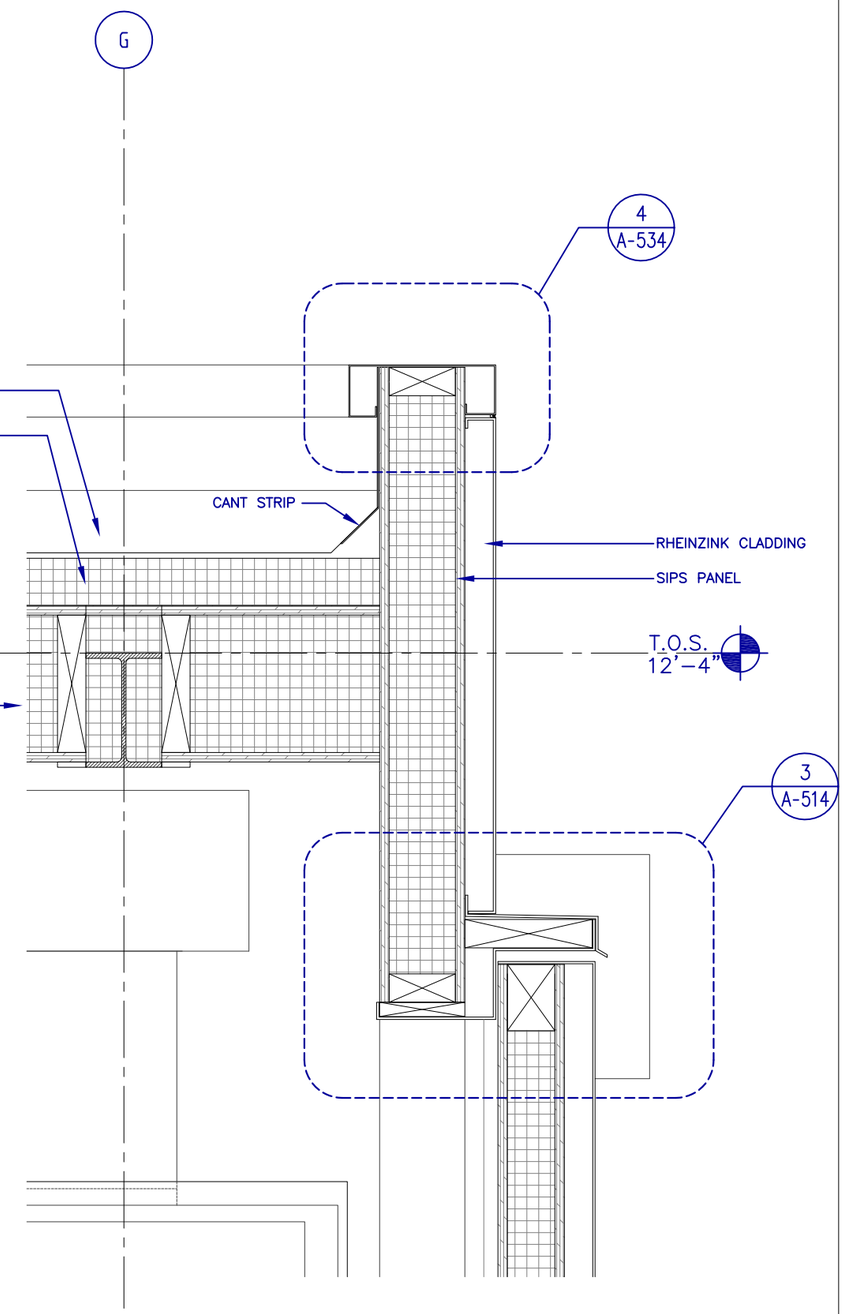

1 A-533 SECTION DETAIL

SCALE: 1 1/2" = 1'-0"

lumenHAUS
a brighter way. everyday.

Virginia Tech Solar Decathlon 2009
Virginia Polytechnic Institute and State University
www.lumenhaus.com

Mark	Date	Description
CD	06.02.09	Final Submission
Δ	04.17.09	Clarification #2
Δ	03.27.09	Clarification #1
DD	02.20.09	Design Development

Solar Decathlon	2009
Date:	06.02.09
Drawn:	CEM + OO
Approved:	JHW

SECTION DETAILS

A-533

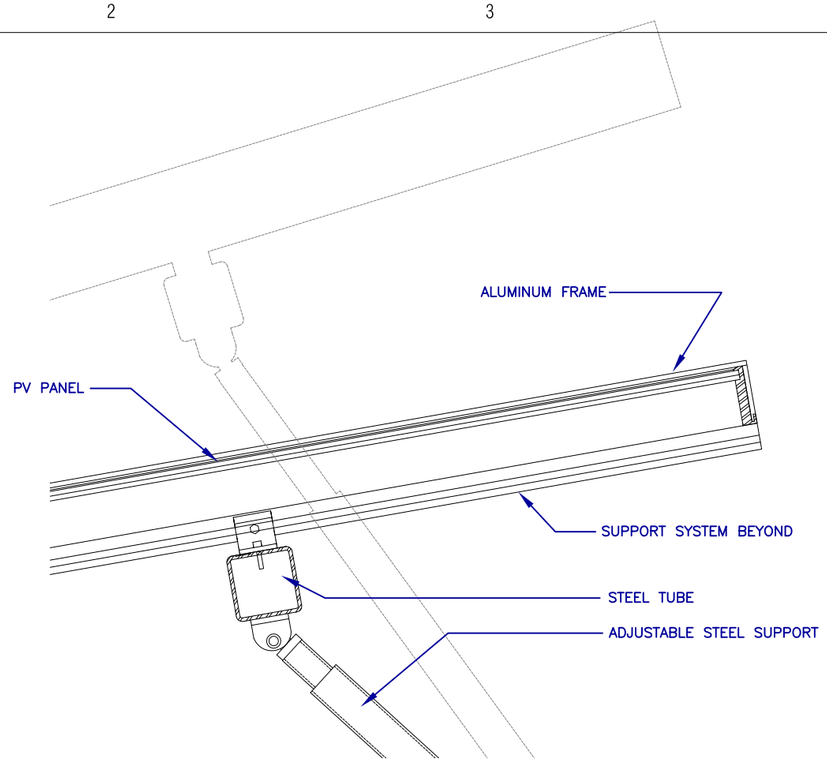

4 A-534 SECTION DETAIL
SCALE: 3 = 1'-0"

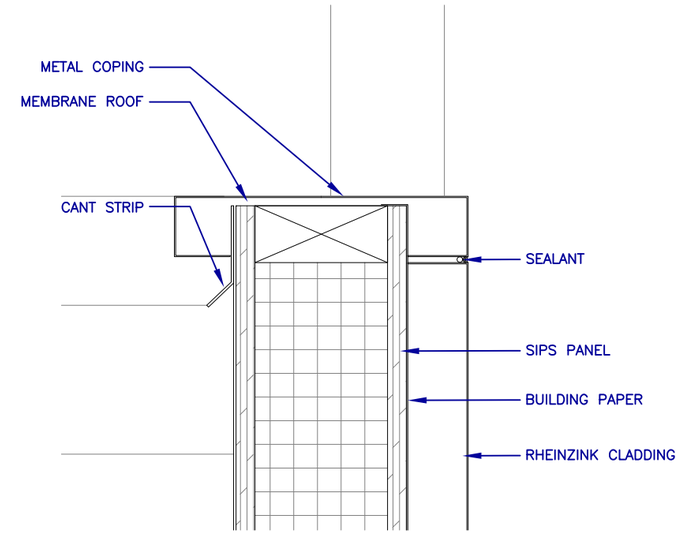

3 A-534 TYPICAL PARAPET DETAIL
SCALE: 1 1/2" = 1'-0"

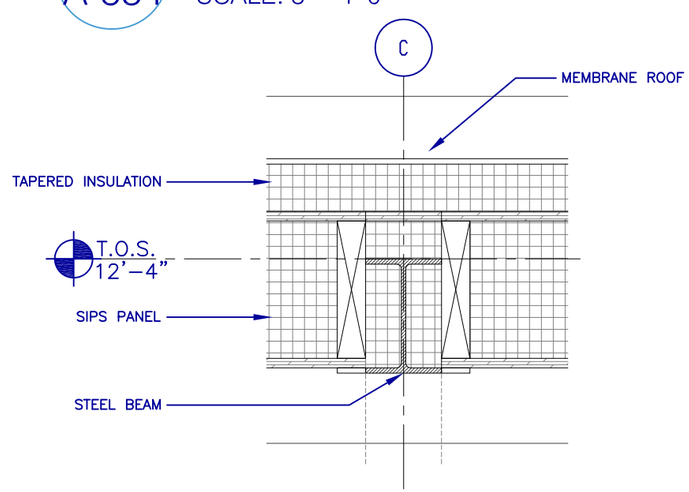

2 A-534 SECTION DETAIL
SCALE: 1 1/2" = 1'-0"

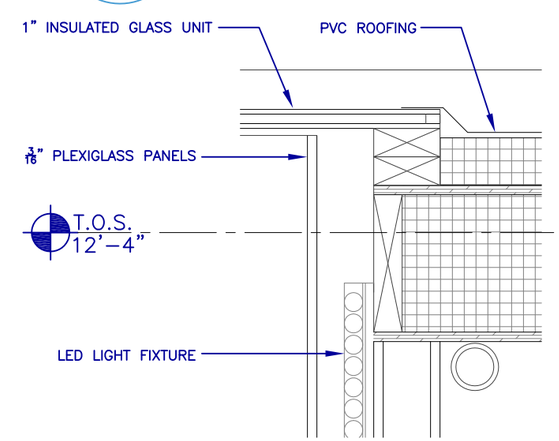

1 A-534 SECTION DETAIL
SCALE: 1 1/2" = 1'-0"

lumenHAUS
a brighter way. everyday.

Virginia Tech **Solar Decathlon 2009**
www.lumenhaus.com
Virginia Polytechnic Institute and State University

Mark	Date	Description
CD	06.02.09	Final Submission
4	04.17.09	Clarification #2
3	03.27.09	Clarification #1
DD	02.20.09	Design Development

Solar Decathlon	2009
Date:	06.02.09
Drawn:	CEM + 00
Approved:	JHW

ROOF DETAILS
A-534

DOOR AND FRAME SCHEDULE

DOOR/WINDOW									FRAME						FIRE RATING LABEL	HARDWARE		NOTES
MARK	SIZE			MATL	EL	GLZ	LOUVER		MATL	EL	GLZ	DETAIL				SET NO	KEYSIDE RM NO	
	W	HT	THK				W	HT				HEAD	JAMB	SILL				
D1	142"	102 1/2"	1 1/2"	Gls & Alum	N	1/2" clr 1/2" T	N/A	N/A	Extr. Alum.	8'5"	Double	A512	A512	A512	3hr			Pocket Sliding Glass
D2	142"	102 1/2"	1 1/2"	Gls & Alum	S	1/2" clr 1/2" T	N/A	N/A	Extr. Alum.	8'5"	Double	A512	A512	A512	3hr			Pocket Sliding Glass
D3	210"	102 1/2"	1 1/2"	Gls & Alum	N	Nominal 1 1/6"	N/A	N/A	Extr. Alum.	8'5"	Double	A512	A512	A512	3hr			Sliding Double Glass
D4	210"	102 1/2"	1 1/2"	Gls & Alum	S	Nominal 1 1/6"	N/A	N/A	Extr. Alum.	8'5"	Double	A512	A512	A512	3hr			Sliding Double Glass
D5	76	102"	4"	Wood	E	Nominal 1 1/6"	N/A	N/A	Extr. Alum.	8'5"	Double	A512	A512	A512	3hr			Lrg Mech Door
D6	58 1/2"	102"	4"	Wood	E	Nominal 1 1/6"	N/A	N/A	Extr. Alum.	8'5"	Double	A512	A512	A512	3hr			Sm Mech Door
D7	42"	81"	1 1/2"	Wood	S	Nominal 1 1/6"	N/A	N/A	Extr. Alum.	8'5"	Double	A512	A512	A512	3hr			Sliding Bthrm Door
D8	54"	84"	2"	Gls & Stl	N	Nominal 1 1/6"	N/A	N/A	Extr. Alum.	8'5"	Double	A512	A512	A512	3hr			Main Entrance
W1	48"	48"	1 1/2"	Gls	UP	Nominal 1 1/6"	N/A	N/A	Extr. Alum.	8'5"	Double	A512	A512	A512	3hr			Skylight
W2	108"	26"	2"	Gls & Alum	W	Nominal 1 1/6"	N/A	N/A	Extr. Alum.	8'5"	Double	A512	A512	A512	3hr			Kitchen Window
W3	142"	102 1/2"	1 1/2"	Gls	S	Nominal 1 1/6"	N/A	N/A	Extr. Alum.	8'5"	Double	A512	A512	A512	3hr			Office Window
W4	25"	96"	2"	Gls	N	Nominal 1 1/6"	N/A	N/A	Extr. Alum.	8'5"	Double	A512	A512	A512	3hr			Main Entrance Flanker
W5	25"	96"	2"	Gls	N	Nominal 1 1/6"	N/A	N/A	Extr. Alum.	8'5"	Double	A512	A512	A512	3hr			Main Entrance Flanker

lumenHAUS
a brighter way. everyday.

Virginia Tech **Solar Decathlon 2009**
Virginia Polytechnic Institute and State University
www.lumenhaus.com

Mark	Date	Description
CD	06.02.09	Final Submission
4	04.17.09	Clarification #2
3	03.27.09	Clarification #1
DD	02.20.09	Design Development

Solar Decathlon	2009
Date:	06.02.09
Drawn:	CEM + OO
Approved:	JHW

SCHEDULE

A-601

ROOM FINISH SCHEDULE

ROOM NO	ROOM NAME	FLOOR	WALLS				CEILING		NOTES
			N	E	S	W	MATL	HEIGHT	
101	kitchen	polished concrete	alum. /glass	—	alum./ glass	maple ply.	trans. stretch fabric	8'5 9/16"	HTC Industries; Fleetwood Aluminum Products, Inc.; Extenzo Stretch Ceiling
102	living/dining room	polished concrete	alum. /glass	maple ply.	alum./ glass	—	trans. stretch fabric	8'5 9/16"	HTC Industries; Fleetwood Aluminum Products, Inc.; Extenzo Stretch Ceiling
103	north corridor	polished concrete	alum. /glass	—	maple ply.	—	trans. stretch fabric	8'5 9/16"	HTC Industries; Fleetwood Aluminum Products, Inc.; Extenzo Stretch Ceiling
104	south corridor	polished concrete	maple ply.	—	alum./ glass	—	trans. stretch fabric	8'5 9/16"	HTC Industries; Fleetwood Aluminum Products, Inc.; Extenzo Stretch Ceiling
201	bedroom	polished concrete	alum. /glass	maple ply.	alum./ glass	maple ply.	trans. stretch fabric	8'5 9/16"	HTC Industries; Fleetwood Aluminum Products, Inc.; Extenzo Stretch Ceiling
202	bathroom	polished concrete	maple ply.	maple ply.	maple ply.	maple ply.	maple ply.	7'	HTC Industries
301	kitchen appliance block	countertop	maple ply.	—	maple ply	glass	trans. stretch fabric	8'5 9/16"	Paperstone; SAGE Electrochromics, Inc.; Extenzo Stretch Ceiling
302	mechanical closet	2'x2' rubber tile	ptd. 1/2" bc ply.	—	ptd. 1/2" bc ply.	ptd. 1/2" bc ply.	ptd. 1/2" bc ply.	9'8 1/2"	Johnsonite Roundel
303	electrical closet	2'x2' rubber tile	ptd. 1/2" bc ply.	—	ptd. 1/2" bc ply.	ptd. 1/2" bc ply.	ptd. 1/2" bc ply.	9'8 1/2"	Johnsonite Roundel

EXTERIOR FINISH SCHEDULE

FACE	FINISHES	NOTES
north side	zinc cladding/sliding glass/insulation panels/metal panels/glass	RHIENZINK America, Inc.; Fleetwood Aluminum Products, Inc.; A. Zahner Co.
south side	zinc cladding/sliding glass/insulation panels/metal panels/glass	RHIENZINK America, Inc.; Fleetwood Aluminum Products, Inc.; A. Zahner Co.
west side	zinc cladding/glass	RHIENZINK America, Inc.; SAGE Electrochromics, Inc
east side	zinc cladding/mechanical door	RHIENZINK America, Inc.

lumenHAUS
a brighter way. everyday.

Virginia Tech **Solar Decathlon 2009**
Virginia Polytechnic Institute and State University
www.lumenhaus.com

Mark	Date	Description
CD	06.02.09	Final Submission
4	04.17.09	Clarification #2
3	03.27.09	Clarification #1
DD	02.20.09	Design Development

Solar Decathlon 2009
Date: 06.02.09
Drawn: CEM + OO
Approved: JHW

SCHEDULE
A-602

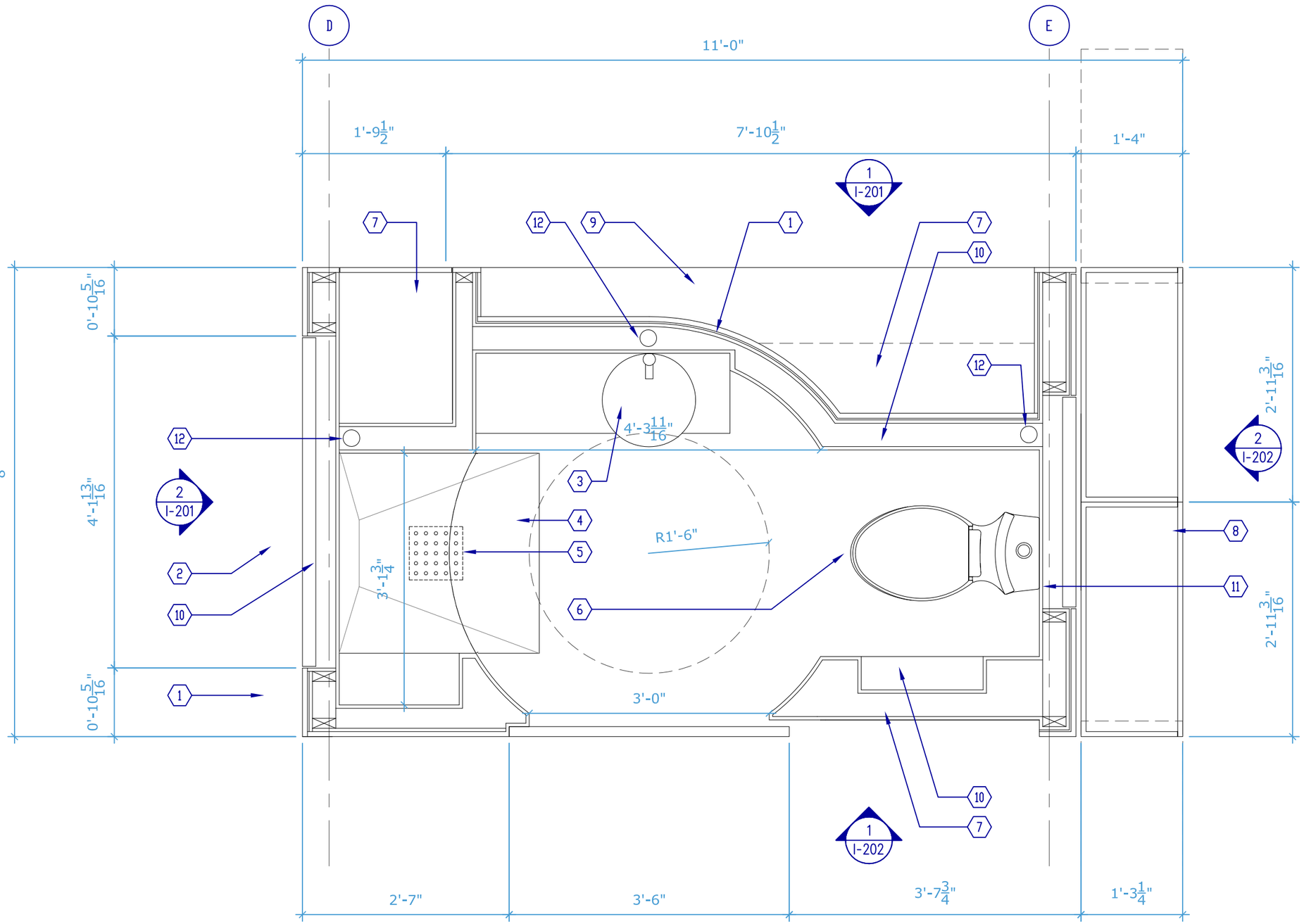

SHEET KEYNOTES

1. MAPLE PLYWOOD ¾"
2. HI DEF TV
3. SINK
4. SHOWER
5. SHOWER HEAD BOVE
6. TOILET
7. SHELVING
8. MAPLE CABINET
9. COUNTER
10. SOUND ATTEN BATT INSULATION
11. CNC PATTERNED MDF
12. VENT PIPE

1 / I-131

FLOOR PLAN - BATHROOM

SCALE: 3/4" = 1'-0"

lumenHAUS
a brighter way. everyday.

Virginia Tech Solar Decathlon 2009
Virginia Polytechnic Institute and State University
www.lumenhaus.com

Mark	Date	Description
CD	06.02.09	Final Submission
4	04.17.09	Clarification #2
3	03.27.09	Clarification #1
DD	02.20.09	Design Development

Solar Decathlon	2009
Date:	06.02.09
Drawn:	CEM + OO
Approved:	JHW

BATHROOM FLOOR PLAN

I-131

SHEET KEYNOTES

1. MAPLE PLYWOOD $\frac{3}{4}$"
2. HI DEF TV
3. BASEBOARD
4. SHELVING
5. COUNTER

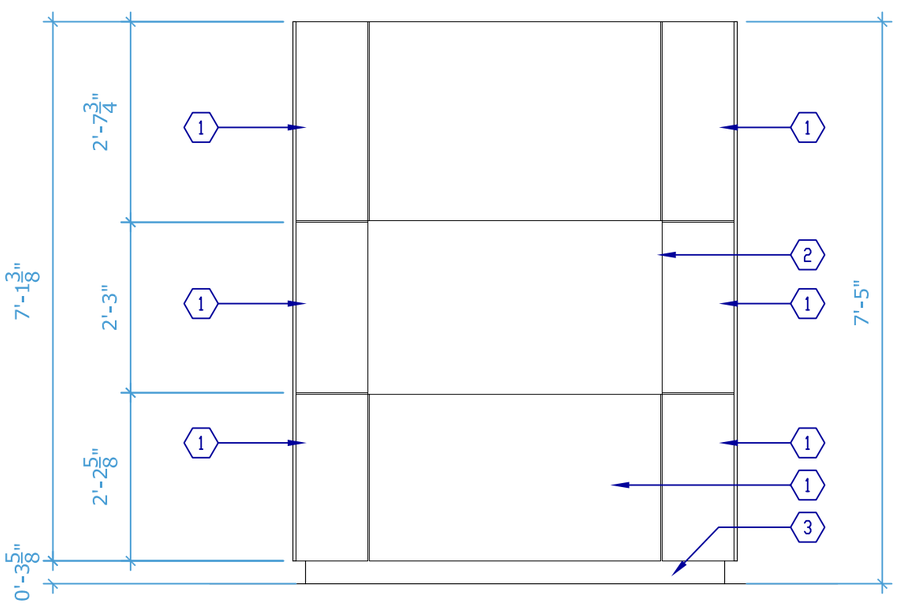

2 I-201 LIVING SPACE ELEVATION

SCALE: 1/2" = 1'-0"

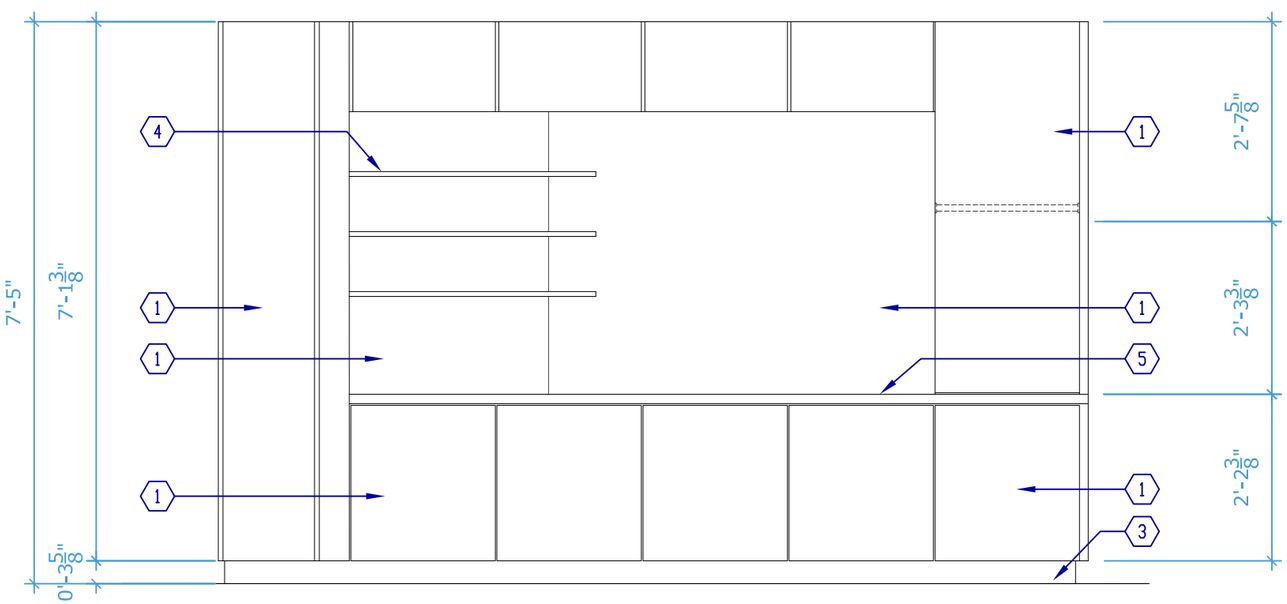

1 I-201 LIVING SPACE ELEVATION

SCALE: 1/2" = 1'-0"

lumenHAUS
a brighter way. everyday.

Virginia Tech **Solar Decathlon 2009**
www.lumenhaus.com
Virginia Polytechnic Institute and State University

Mark	Date	Description
CD	06.02.09	Final Submission
4	04.17.09	Clarification #2
3	03.27.09	Clarification #1
DD	02.20.09	Design Development

Solar Decathlon	2009
Date:	06.02.09
Drawn:	CEM + OO
Approved:	JHW

LIVING SPACE ELEVATION

I-201

SHEET KEYNOTES

1. MAPLE PLYWOOD $\frac{3}{4}$"
2. BASEBOARD
3. SHELVING

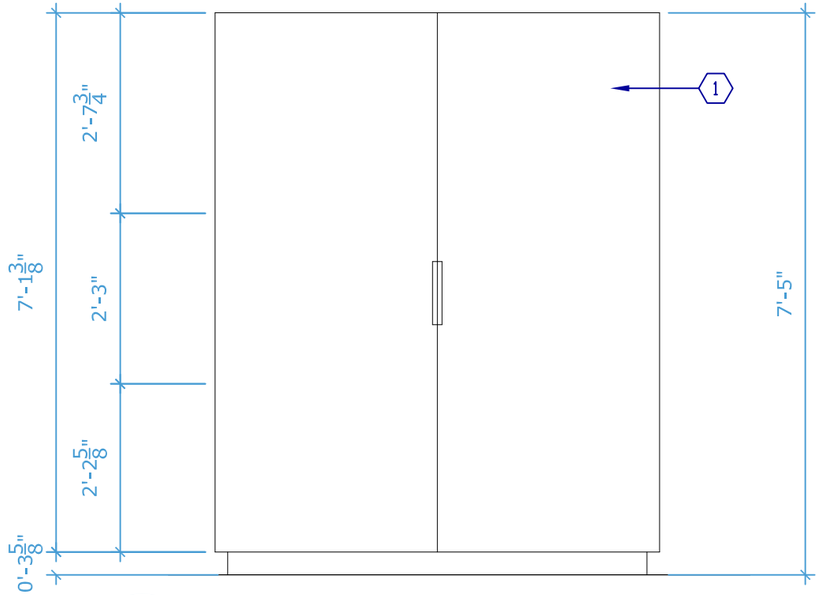

2 I-202 LIVING SPACE ELEVATION

SCALE: 1/2" = 1'-0"

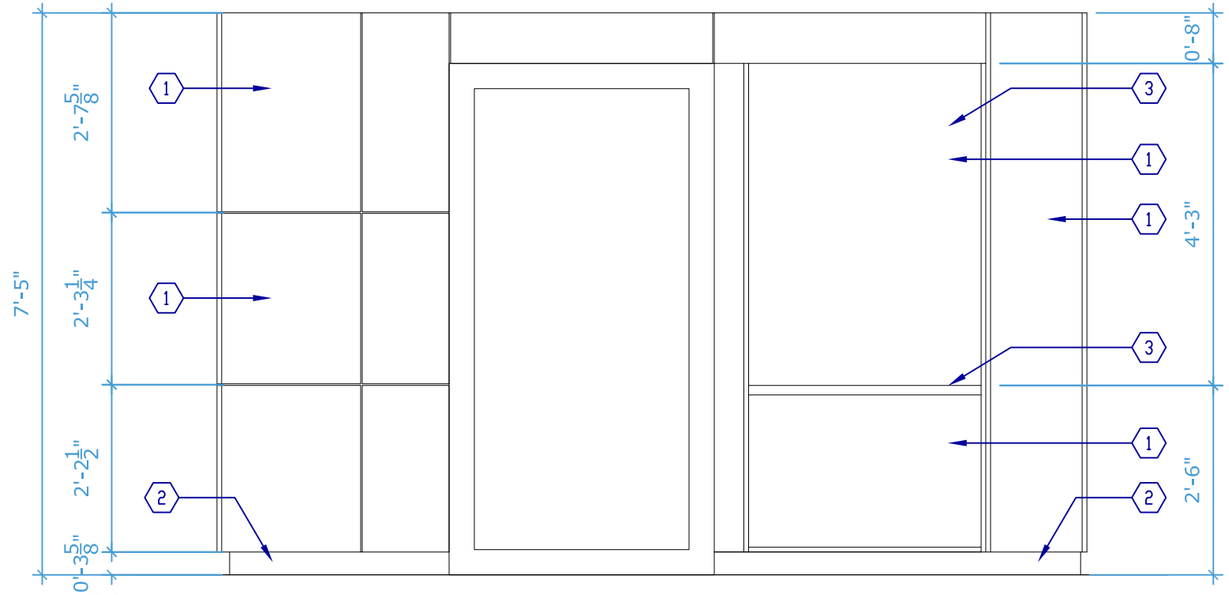

1 I-202 LIVING SPACE ELEVATION

SCALE: 1/2" = 1'-0"

lumenHAUS
a brighter way. everyday.

Virginia Tech Solar Decathlon 2009
www.lumenhaus.com
Virginia Polytechnic Institute and State University

Mark	Date	Description
CD	06.02.09	Final Submission
4	04.17.09	Clarification #2
3	03.27.09	Clarification #1
DD	02.20.09	Design Development

Solar Decathlon	2009
Date:	06.02.09
Drawn:	CEM + OO
Approved:	JHW

LIVING SPACE ELEVATION

I-202

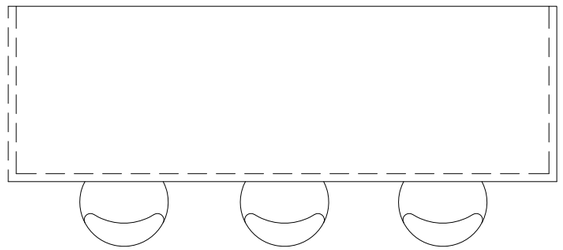

4 I-211 KITCHEN ISLAND PLAN

SCALE: 1/2" = 1'-0"

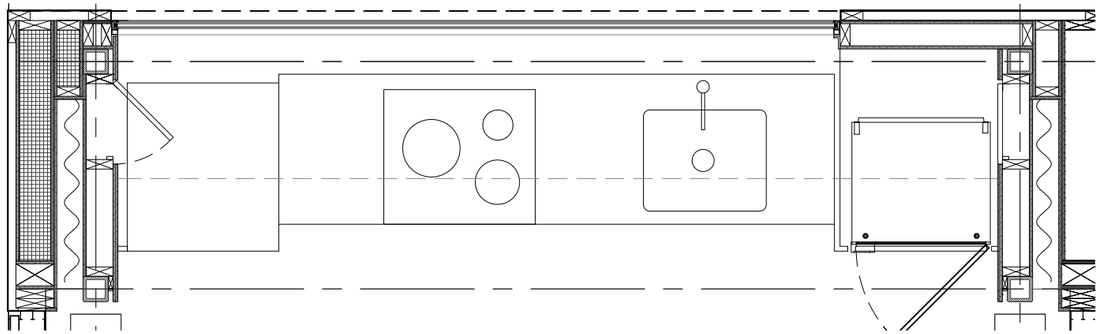

2 I-211 KITCHEN PLAN

SCALE: 1/2" = 1'-0"

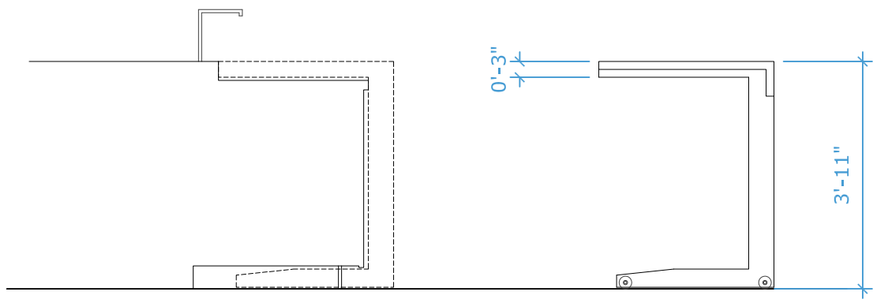

3 I-211 KITCHEN ISLAND SECTION

SCALE: 1/2" = 1'-0"

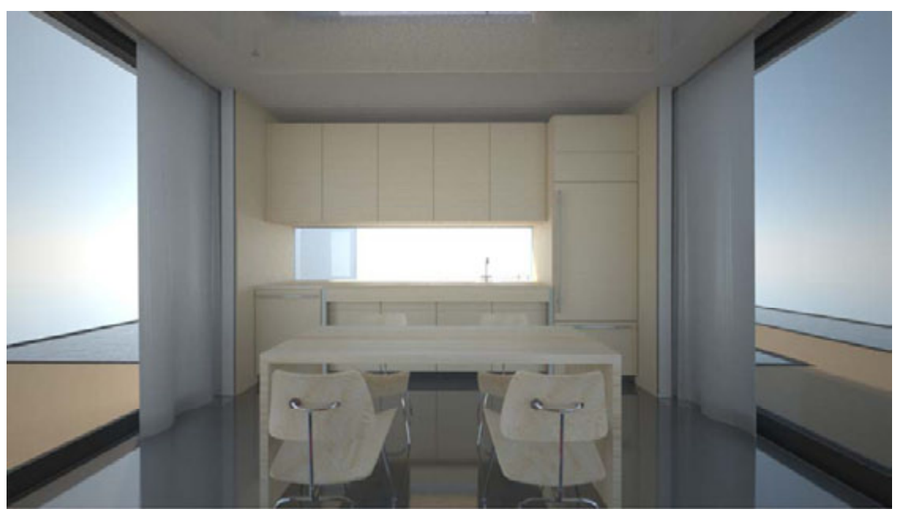

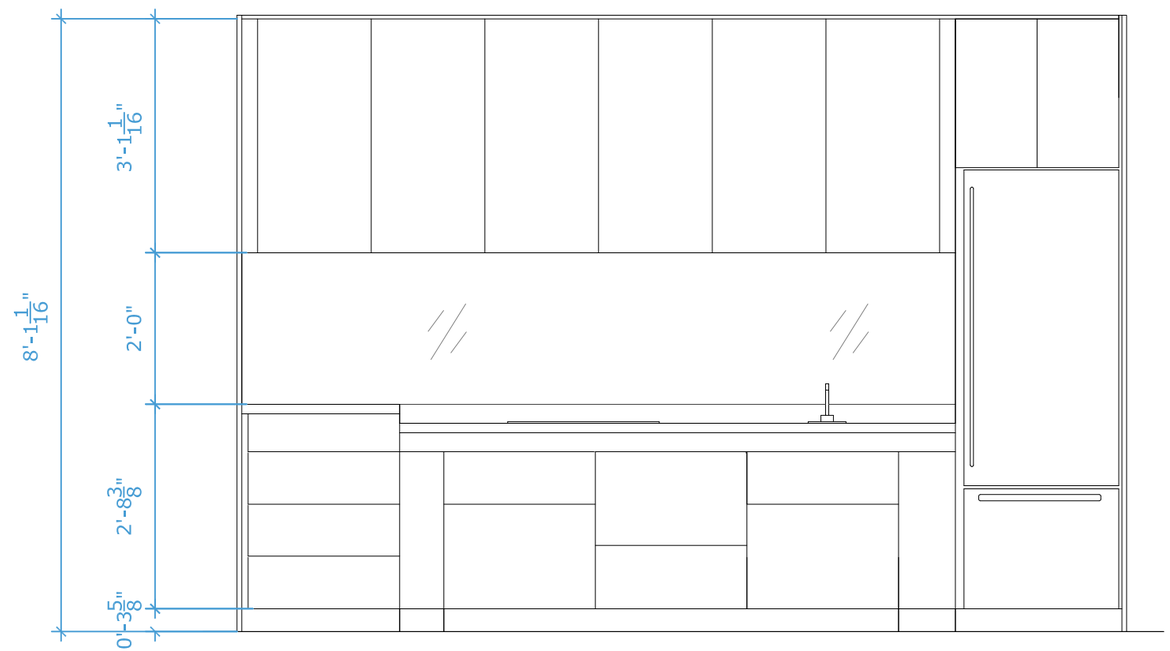

1 I-211 KITCHEN ELEVATION

SCALE: 1/2" = 1'-0"

lumenHAUS

a brighter way. everyday.

www.lumenhaus.com

Virginia Tech **Solar Decathlon 2009**

Virginia Polytechnic Institute and State University

Mark	Date	Description
CD	06.02.09	Final Submission
4	04.17.09	Clarification #2
3	03.27.09	Clarification #1
DD	02.20.09	Design Development

Solar Decathlon	2009
Date:	06.02.09
Drawn:	CEM + OO
Approved:	JHW

KITCHEN ELEVATION

I-211

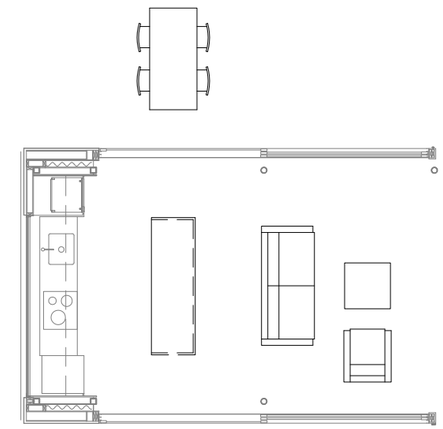

1

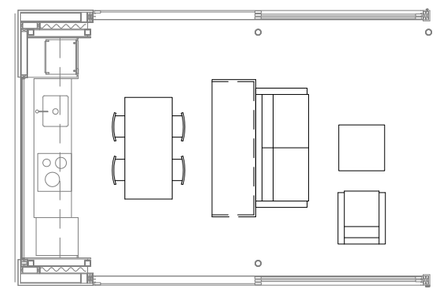

2

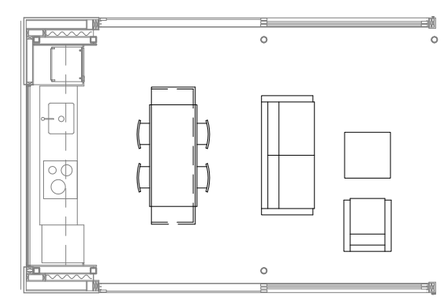

3

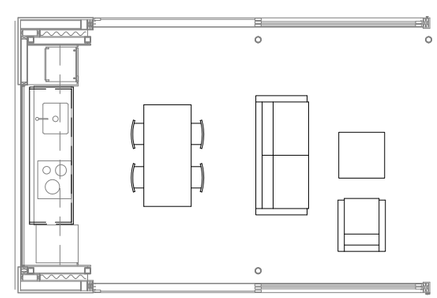

4

SHEET KEYNOTES

1. TABLES MOVE OUT TO THE DECK FOR AM OUTDOOR GATHERING OCCASION
2. KITCHEN ISLAND MOVES OVER THE TABLE
3. KITCHEN ISLAND OVER THE TABLE
4. KITCHEN ISLAND STORES IN AT THE KITCHEN COUNTERS

1 / I-212 KITCHEN ISLAND MOVEMENT

SCALE: 1/2" = 1'-0"

lumenHAUS
a brighter way. everyday.

Virginia Tech **Solar Decathlon 2009**
Virginia Polytechnic Institute and State University
www.lumenhaus.com

Mark	Date	Description
CD	06.02.09	Final Submission
4	04.17.09	Clarification #2
3	03.27.09	Clarification #1
DD	02.20.09	Design Development

Solar Decathlon	2009
Date:	06.02.09
Drawn:	CEM + OO
Approved:	JHW

KITCHEN DIAGRAM

I-212

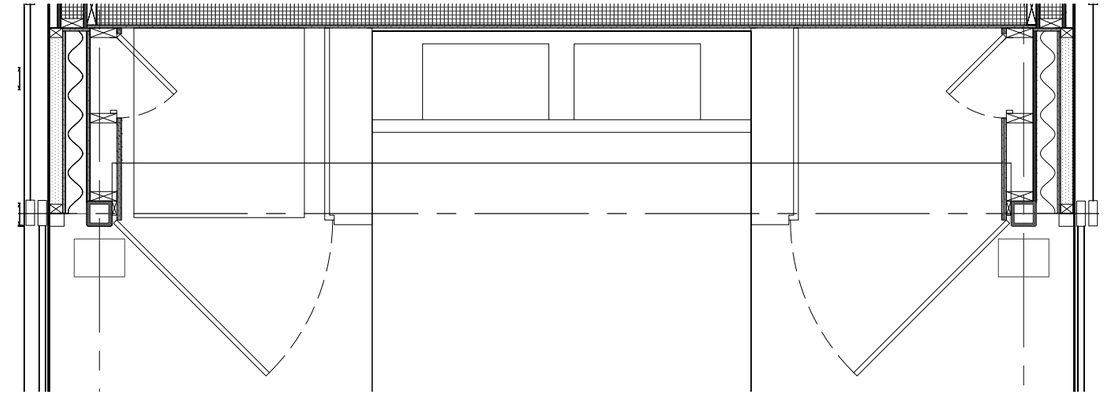

3
I-221

BEDROOM PLAN

SCALE: 1/2" = 1'-0"

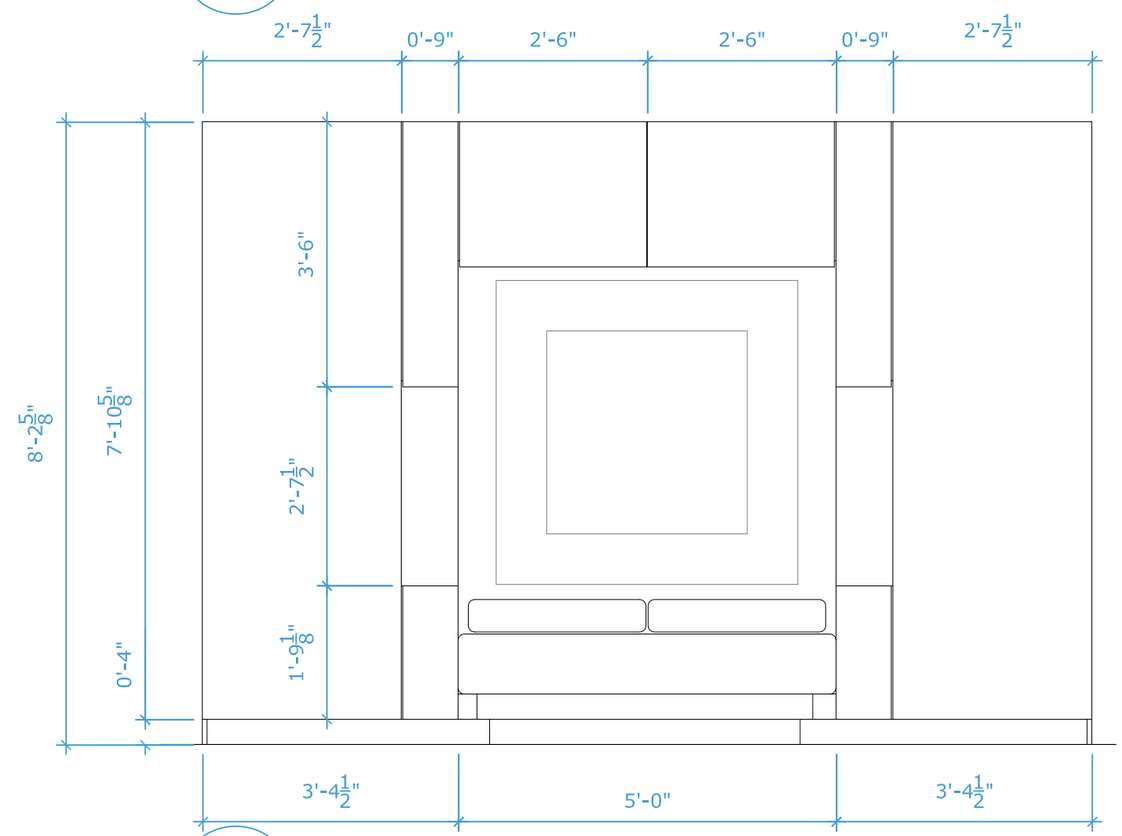

1
I-221

BEDROOM ELEVATION

SCALE: 1/2" = 1'-0"

lumenHAUS
a brighter way. everyday.

Virginia Tech **Solar Decathlon 2009**
Virginia Polytechnic Institute and State University
www.lumenhaus.com

Mark	Date	Description
CD	06.02.09	Final Submission
4	04.17.09	Clarification #2
3	03.27.09	Clarification #1
DD	02.20.09	Design Development

Solar Decathlon	2009
Date:	06.02.09
Drawn:	CEM + OO
Approved:	JHW

BEDROOM ELEVATION

I-221

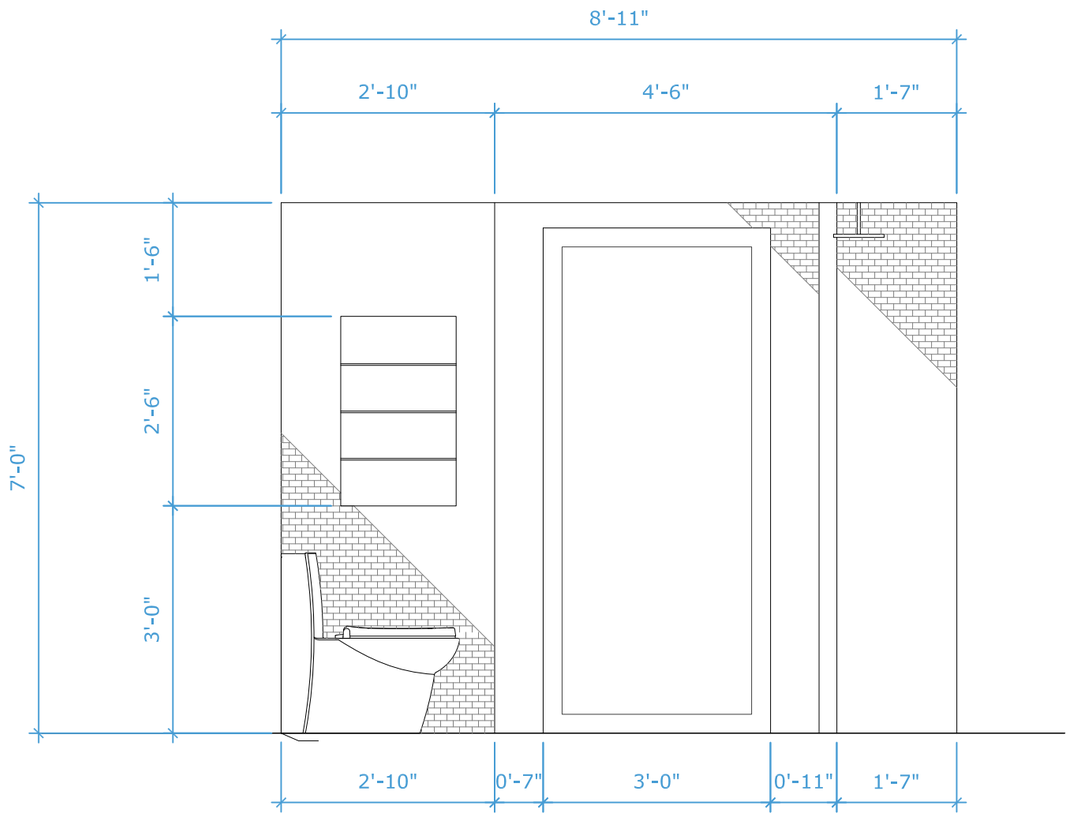

2 I-231 INTERIOR ELEVATION - NORTH

SCALE: 1/2" = 1'-0"

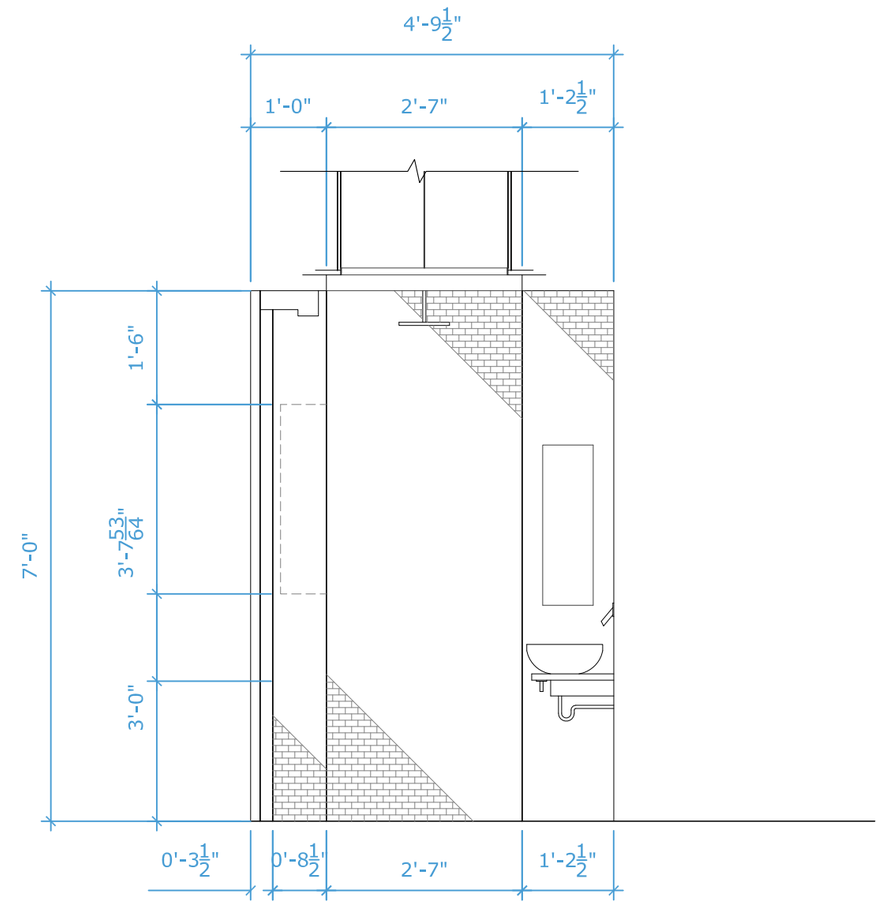

1 I-231 INTERIOR ELEVATION - EAST

SCALE: 1/2" = 1'-0"

Virginia Tech **Solar Decathlon 2009**

Virginia Polytechnic Institute and State University

www.lumenhaus.com

Mark	Date	Description
CD	06.02.09	Final Submission
4	04.17.09	Clarification #2
3	03.27.09	Clarification #1
DD	02.20.09	Design Development

Solar Decathlon	2009
Date:	06.02.09
Drawn:	CEM + 00
Approved:	JHW

BATHROOM ELEVATION

I-231

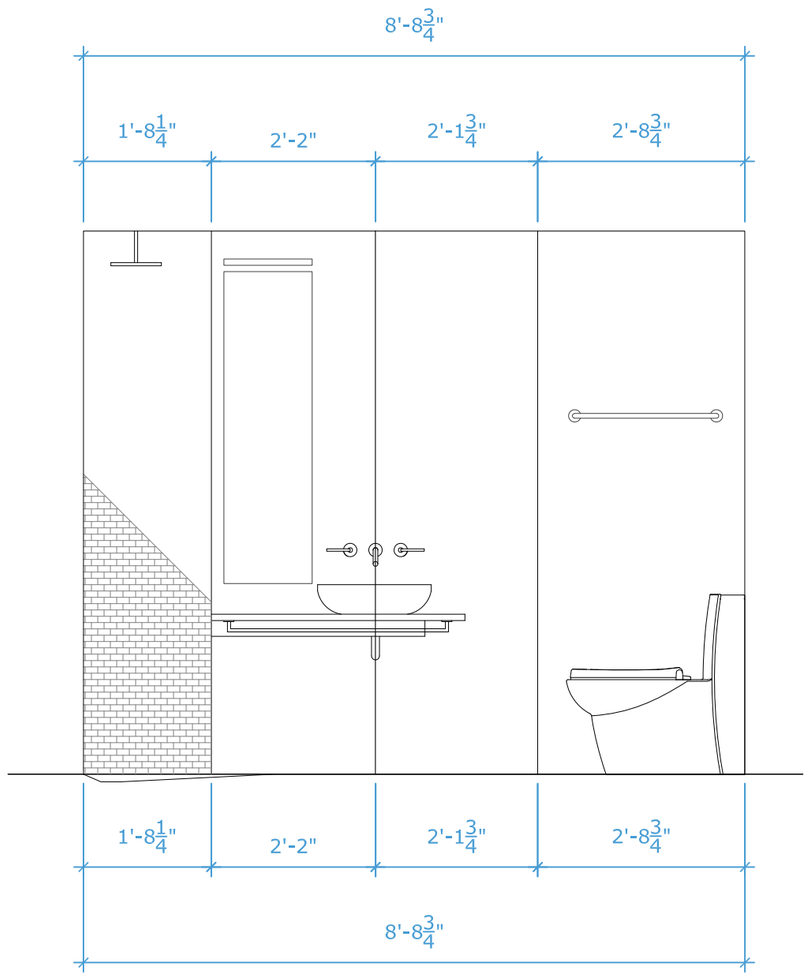

1
I-232

INTERIOR ELEVATION - SOUTH

SCALE: 1/2" = 1'-0"

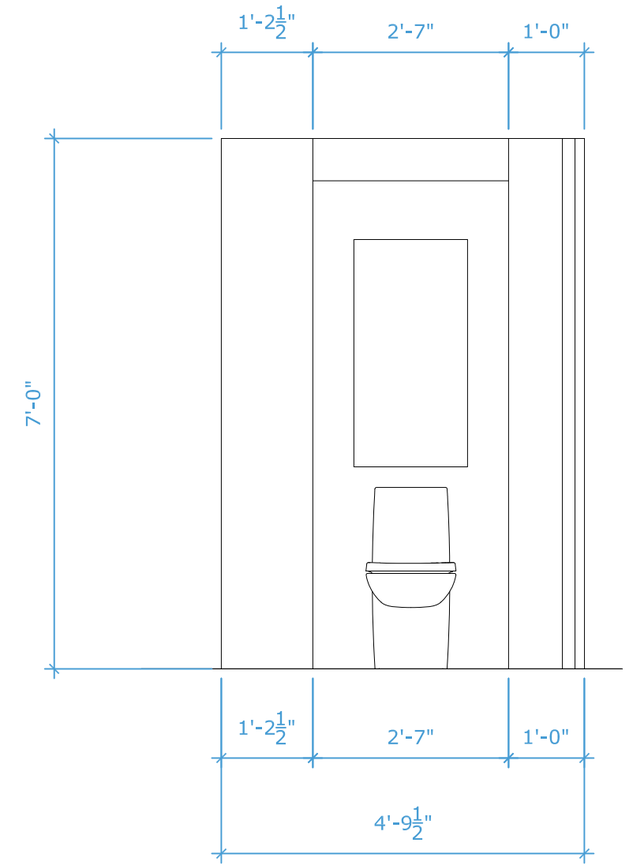

2
I-232

INTERIOR ELEVATION - WEST

SCALE: 1/2" = 1'-0"

Virginia Tech **Solar Decathlon 2009**

Virginia Polytechnic Institute and State University

www.lumenhaus.com

Mark	Date	Description
CD	06.02.09	Final Submission
Δ	04.17.09	Clarification #2
Δ	03.27.09	Clarification #1
DD	02.20.09	Design Development

Solar Decathlon	2009
Date:	06.02.09
Drawn:	CEM + 00
Approved:	JHW

BATHROOM ELEVATION

I-232

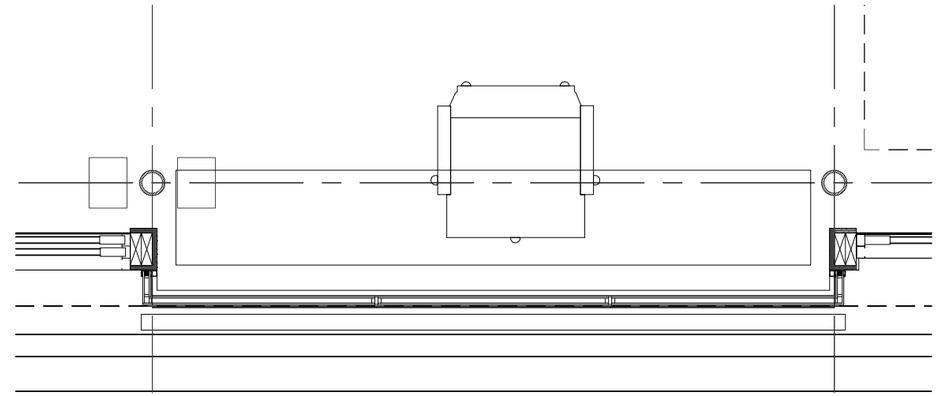

2
I-241

HOME OFFICE PLAN

SCALE: 1/2" = 1'-0"

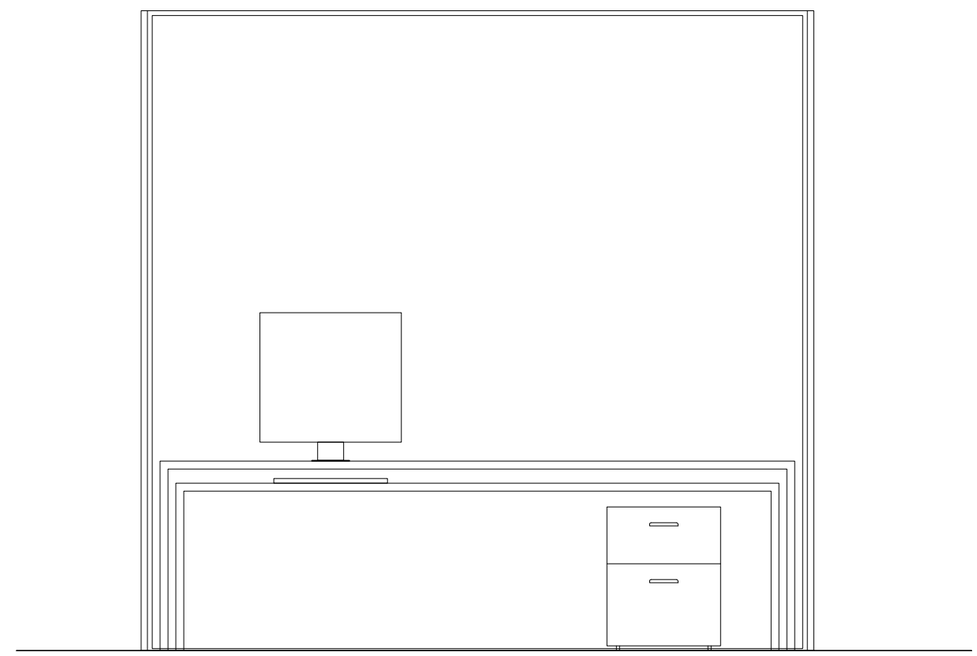

1
I-241

HOME OFFICE ELEVATION

SCALE: 1/2" = 1'-0"

lumenHAUS
a brighter way. everyday.

Virginia Tech **Solar Decathlon 2009**
Virginia Polytechnic Institute and State University
www.lumenhaus.com

Mark	Date	Description
CD	06.02.09	Final Submission
4	04.17.09	Clarification #2
3	03.27.09	Clarification #1
DD	02.20.09	Design Development

Solar Decathlon	2009
Date:	06.02.09
Drawn:	CEM + OO
Approved:	JHW

HOME OFFICE ELEVATION

I-241

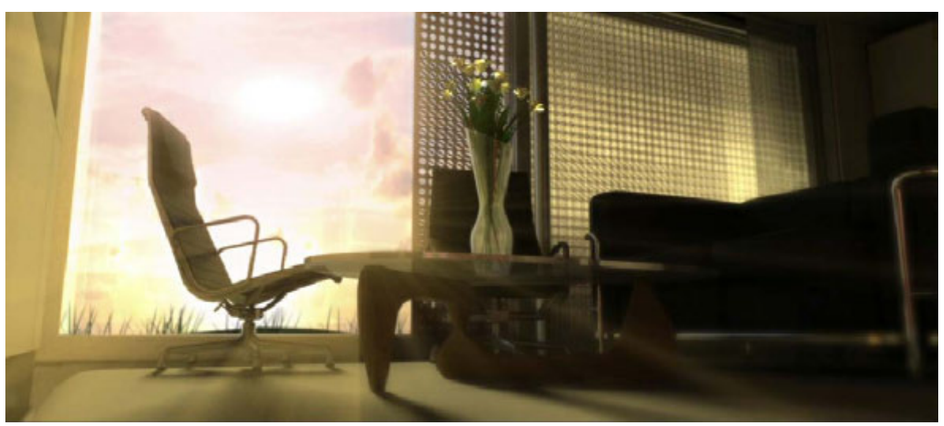

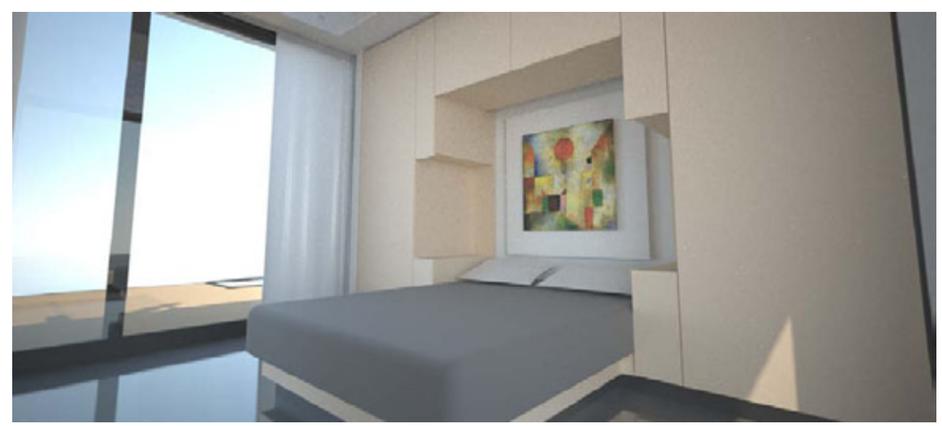

1 I-901

INTERIOR RENDERINGS

lumenHAUS
a brighter way. everyday.

Virginia Tech **Solar Decathlon 2009**
Virginia Polytechnic Institute and State University
www.lumenhaus.com

Mark	Date	Description
CD	06.02.09	Final Submission
4	04.17.09	Clarification #2
3	03.27.09	Clarification #1
DD	02.20.09	Design Development

Solar Decathlon	2009
Date:	06.02.09
Drawn:	CEM + OO
Approved:	JHW

INTERIOR RENDERINGS

I-901

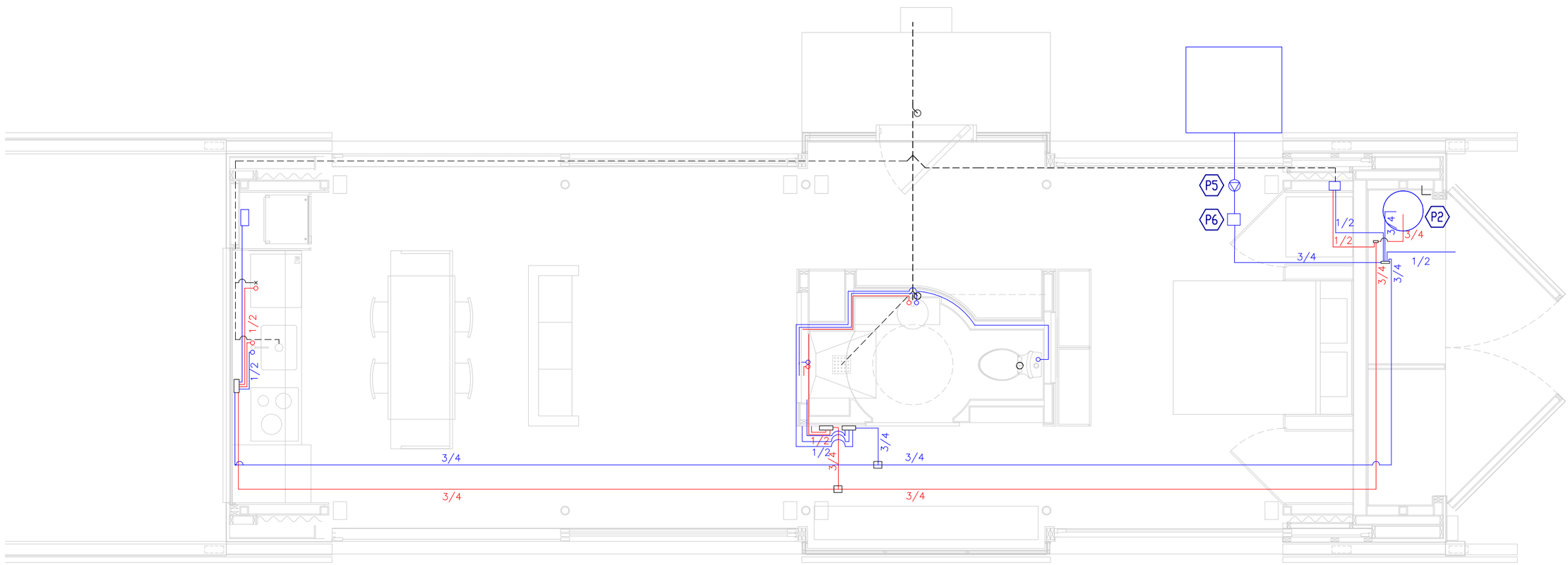

1 P-101

SUPPLY AND REMOVAL PLAN

SCALE: 1/4" = 1'-0"

0 5 10 15

lumenHAUS
a brighter way. everyday.

Virginia Tech Solar Decathlon 2009
www.lumenhaus.com
Virginia Polytechnic Institute and State University

Mark	Date	Description
CD	06.02.09	Final Submission
4	04.17.09	Clarification #2
4	03.27.09	Clarification #1
DD	02.20.09	Design Development

Solar Decathlon	2009
Date:	06.02.09
Drawn:	CEM + OO
Approved:	JHW

SUPPLY & REMOVAL PLAN

P-101

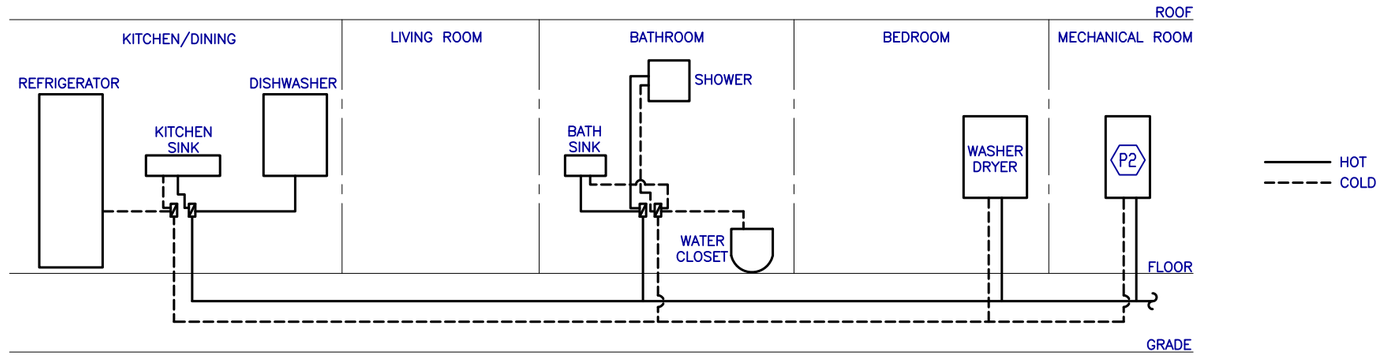

2
P-601

HOT/COLD WATER RISER DIAGRAM

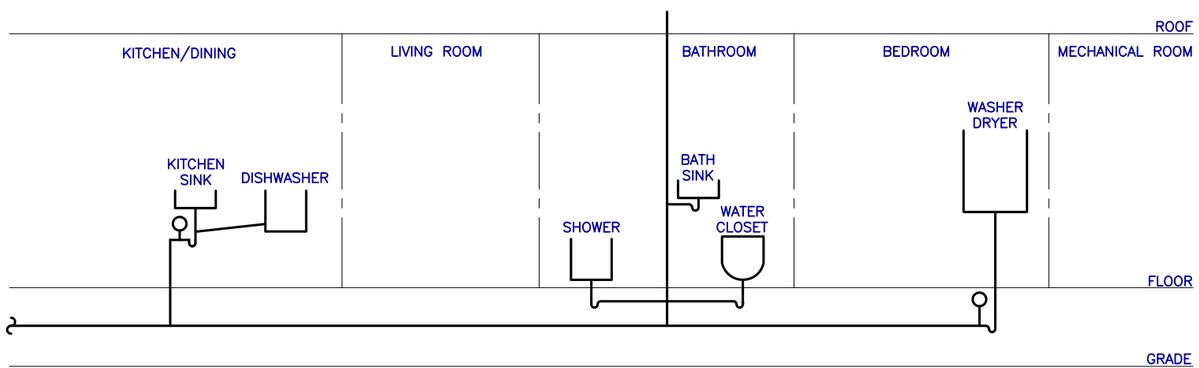

1
P-601

DRAIN/WASTE/VENT RISER DIAGRAM

lumenHAUS
a brighter way. everyday.

Virginia Tech **Solar Decathlon 2009**
Virginia Polytechnic Institute and State University
www.lumenhaus.com

Mark	Date	Description
CD	06.02.09	Final Submission
4	04.17.09	Clarification #2
3	03.27.09	Clarification #1
DD	02.20.09	Design Development

Solar Decathlon	2009
Date:	06.02.09
Drawn:	CEM + OO
Approved:	JHW

SCHEMATIC DIAGRAMS

P-601

WATER TO WATER HEAT PUMP SCHEDULE

MARK	MFR	MODEL	HEATING			COOLING			VOLTS	NOTES
			MBtuH	COP	KW	MBtuH	EER	KW		
P1	FHP Manufacturing	Aquarius WW series	28.8	3.37	2.48	23.6	12.9	1.82	230	

HOT WATER STORAGE TANK SCHEDULE

MARK	MFR	MODEL	Type	NOTES
P2	Buderus	Logalux SM300	Heat Exchanger	

PLUMBING PUMP SCHEDULE

MARK	TYPE (Model no.)	AREA SERVED	Flow (GPM)	TOTAL HEAD (feet)	MIN % EFF	MIN MOTORW (hp)	VOLTS/ PHASE	NOTES
P3	UP15-10SU7P/TLC	Radiant Flooring	1	2.7	2.0	1/25	115/ 1	
P4	ARM 29	Geothermal Heat pumps	6	74	18.2	1/6	230/ 1	
P5	J5S	Potable Water	10.2	92.5	N/A	1/2	115/1	

PRESSURE TANK

MARK	MFR	MODEL	Type	DOWNDRAW (30/50)	MAX PSI	PRECHARGE (psi)	NOTES
P6	Flexicon	H2 PRO WWT 35	Diaphram	11.3	125	38	

lumenHAUS
a brighter way. everyday.

Virginia Tech **Solar Decathlon 2009**
Virginia Polytechnic Institute and State University
www.lumenhaus.com

Mark	Date	Description
CD	06.02.09	Final Submission
4	04.17.09	Clarification #2
3	03.27.09	Clarification #1
DD	02.20.09	Design Development

Solar Decathlon	2009
Date:	06.02.09
Drawn:	CEM + OO
Approved:	JHW

SCHEDULE

P-602

SHEET KEYNOTES

1. 6"x7"
2. 7"x7"
3. 7"x10"
4. 8"x12"
5. DAMPERS
6. SUPPLY 14" DIAMETER
7. RETURN

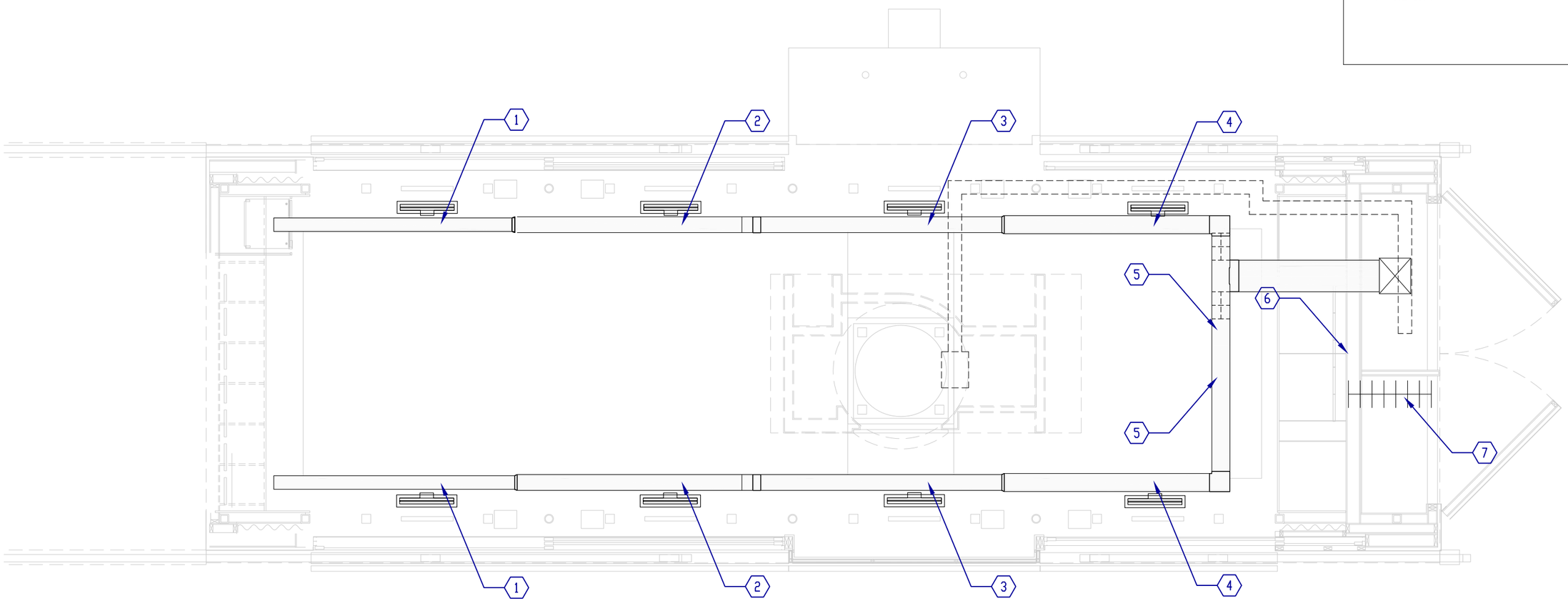

1 HVAC DISTRIBUTION
M-102

SCALE: 1/4" = 1'-0"

0 5 10 15

lumenHAUS
a brighter way. everyday.

Virginia Tech Solar Decathlon 2009
www.lumenhaus.com
Virginia Polytechnic Institute and State University

Mark	Date	Description
CD	06.02.09	Final Submission
4	04.17.09	Clarification #2
3	03.27.09	Clarification #1
DD	02.20.09	Design Development

Solar Decathlon	2009
Date:	06.02.09
Drawn:	CEM + 00
Approved:	JHW

HVAC DISTRIBUTION PLAN

M-102

Z:\SD DC 2009\Design Development\Images\ImagesForSustainable\radiant new.JPG

RADIANT FLOOR HEATING

FLEXIBLE AND DURABLE

ENHANCED TEMPERATURE TRANSFER CAPABILITY

4X LIGHTER THAN COPPER PIPING

EXPANDS WHEN FROZEN TO AVOID CRACKING

RESISTANT TO CORROSION

WATER FLOW IS INAUDIBLE

PREVENTS OVERHEATING AND MINIMIZES HEAT LOSS

GEOTHERMAL HEAT SINK

HELPS REGULATE WATER/AIR TEMPERATURE WITHIN HOUSE

UTILIZES EARTH'S CONSTANT CORE TEMPERATURE

CLOSED LOOP SYSTEM REDUCES HEAT LOSS

HIGH EFFICIENCY

DECREASED ENERGY USE

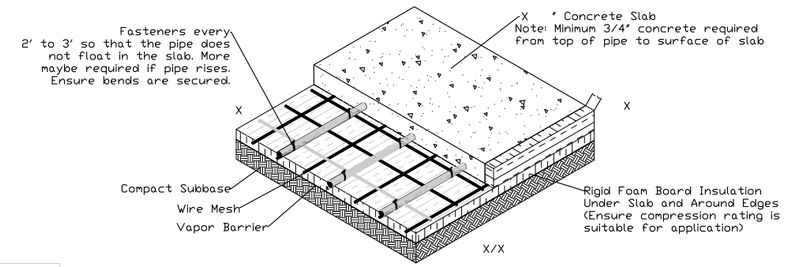

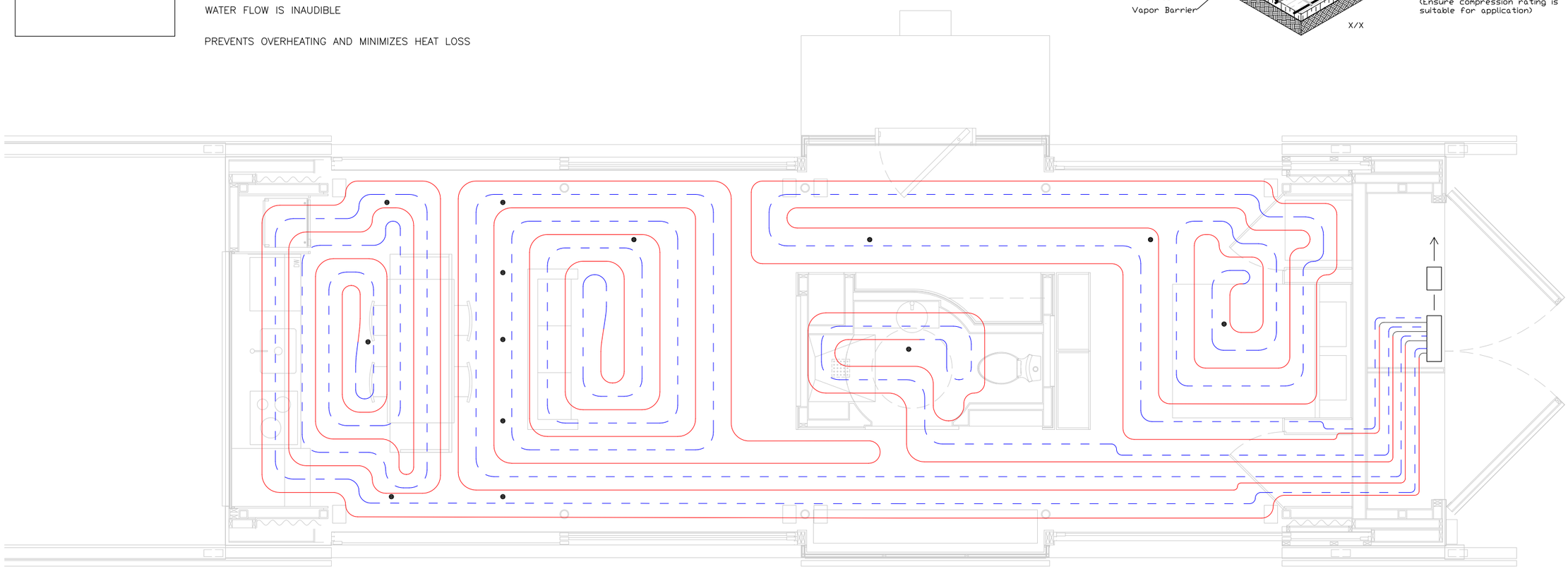

1
M-103

RADIANT FLOOR HEATING PLAN

SCALE: 1/4" = 1'-0"

0 5 10 15

lumenHAUS
a brighter way. everyday.

Virginia Tech **Solar Decathlon 2009**
Virginia Polytechnic Institute and State University
www.lumenhaus.com

Mark	Date	Description
CD	06.02.09	Final Submission
4	04.17.09	Clarification #2
3	03.27.09	Clarification #1
DD	02.20.09	Design Development

Solar Decathlon	2009
Date:	06.02.09
Drawn:	CEM + OO
Approved:	JHW

HEATING PLAN

M-103

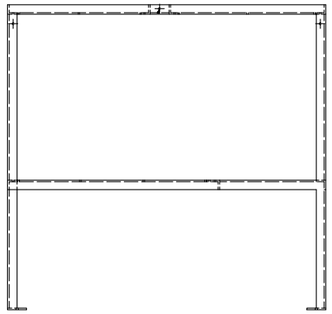

5 M-201 MECH RACK ELEVATION
SCALE: 1/2" = 1'-0"

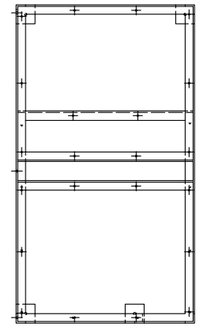

2 M-201 MECH RACK PLAN
SCALE: 1/2" = 1'-0"

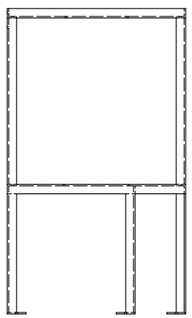

4 M-201 MECH RACK ELEVATION
SCALE: 1/2" = 1'-0"

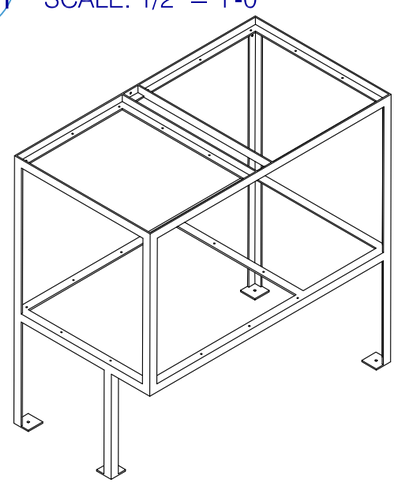

3 M-201 MECH RACK ISOMETRIC
SCALE: 1/2" = 1'-0"

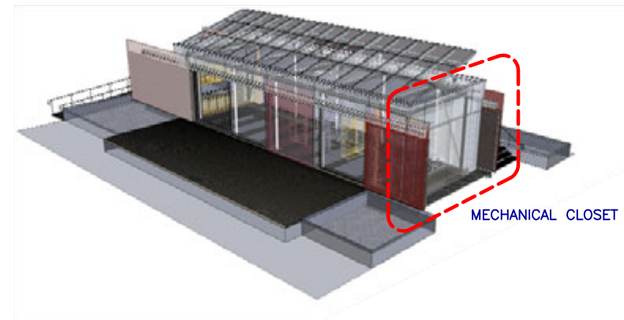

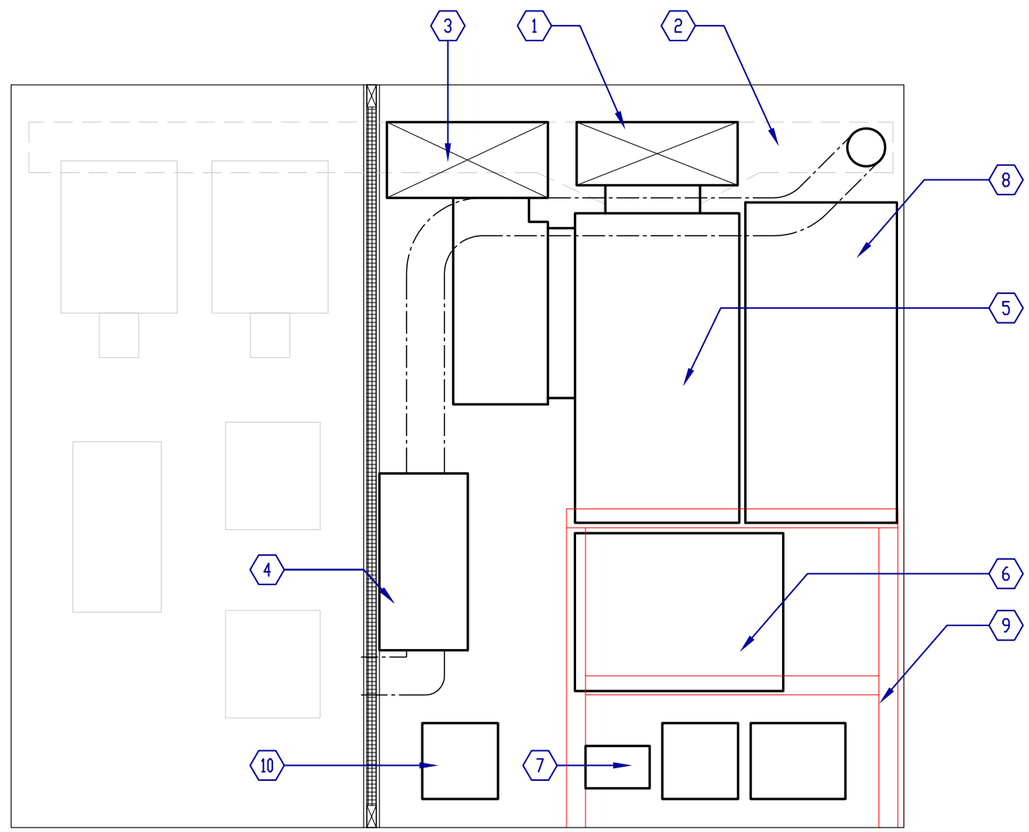

1 M-201 MECHANICAL ROOM ELEVATION
SCALE: 1/2" = 1'-0"

0 3 7

SHEET KEYNOTES

1. SUPPLY
2. RECOIL
3. RETURN AIR
4. HEAT EXCHANGER
5. WATER–TO–AIR HEAT PUMP
6. WATER–TO–WATER HEAT PUMP
7. RADIANT PUMP
8. HOT WATER
9. HVAC DUAL CIRCULAR PUMP
10. RADIANT MANIFOLD

lumenHAUS
a brighter way. everyday.

Virginia Tech **Solar Decathlon 2009**
Virginia Polytechnic Institute and State University
www.lumenhaus.com

Mark	Date	Description
CD	06.02.09	Final Submission
4	04.17.09	Clarification #2
3	03.27.09	Clarification #1
DD	02.20.09	Design Development

Solar Decathlon	2009
Date:	06.02.09
Drawn:	CEM + OO
Approved:	JHW

MECHANICAL ROOM ELEVATION

M-201

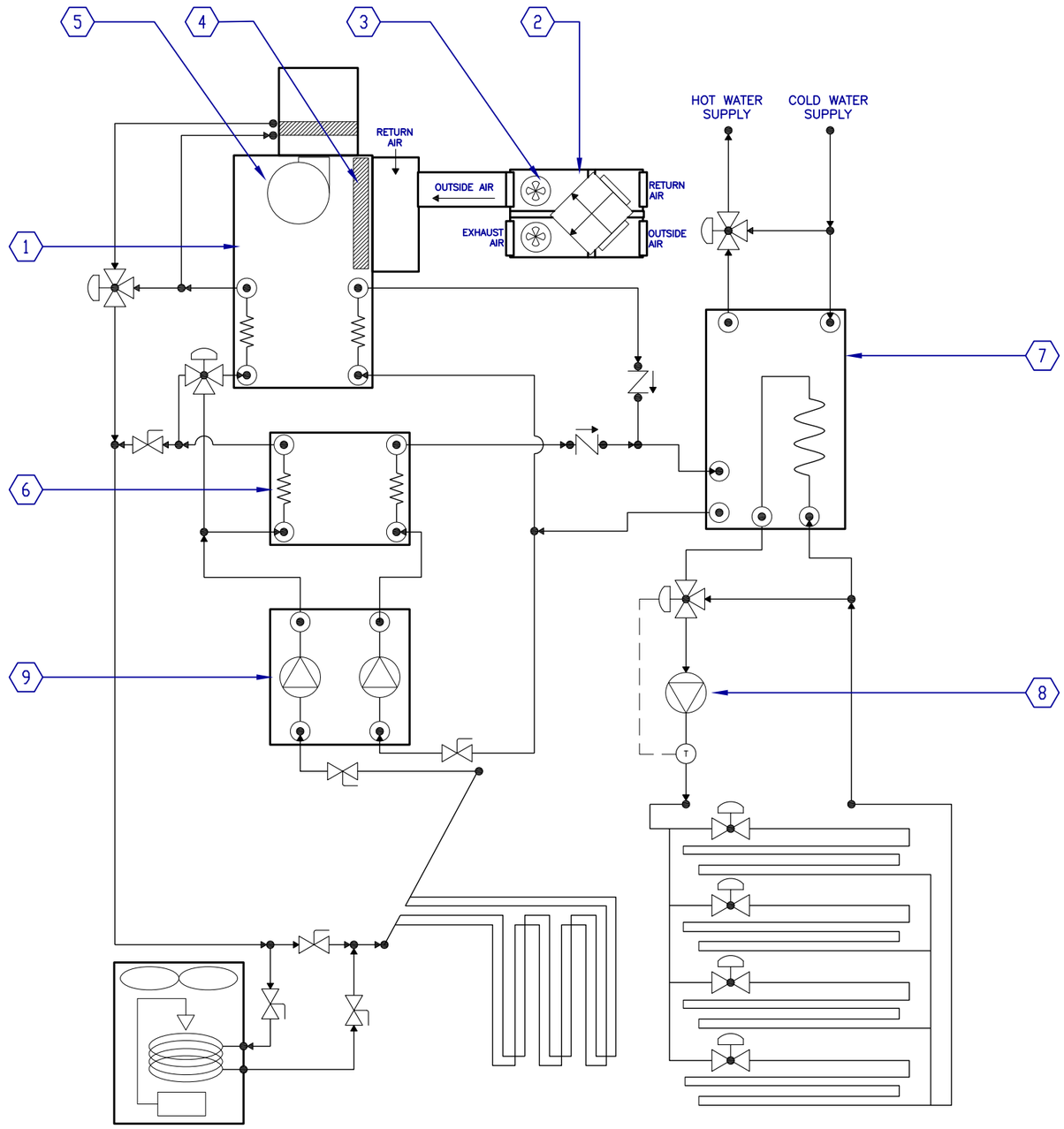

1
M-601

MECHANICAL SYSTEM SCHEMATIC DIAGRAM

SHEET KEYNOTES

1. WATER–TO–AIR WATER SOURCE HEAT PUMP
2. ENERGY RECOVERY UNIT
3. ENERGY RECOVERY VENTILATOR
4. FILTER
5. BLOWER
6. WATER–TO–WATER WATER SOURCE HEAT PUMP
7. HOT WATER TANK
8. CIRCULATING PUMP
9. CIRCULATING PUMP KIT

MIXING VALVE

ISOLATION VALVE

PUMP

CHECK VALVE

TEMPERATURE SENSOR

FAN

GEOTHERMAL HEAT EXCHANGE LOOP

RADIANT FLOOR LOOP

HEAT PUMP

COOLING TOWER

BLOWER

FILTER

lumenHAUS
a brighter way. everyday.

Virginia Tech **Solar Decathlon 2009**
Virginia Polytechnic Institute and State University
www.lumenhaus.com

Mark	Date	Description
CD	06.02.09	Final Submission
4	04.17.09	Clarification #2
3	03.27.09	Clarification #1
DD	02.20.09	Design Development

Solar Decathlon	2009
Date:	06.02.09
Drawn:	CEM + 00
Approved:	JHW

HVAC SYSTEMS DIAGRAM

M-601

WATER TO AIR HEAT PUMP

MARK	MFR	MODEL	VOLT	COOLING (water-60° F, air 85° F) at 750 CFM			HEATING (water-60° F, air 60° F) at 750 CFM		Notes
				T CAPAC (MBtuH)	S CAPAC (MBtuH)	Kw	T CAPAC (MBtuH)	Kw	
1	FHP Manufacturing	Aquarius II AP	208	24.47	17.93	0.78	22.83	1.12	

ENERGY RECOVERY VENTILATOR

MARK	MFR	MODEL	VAC	HEATING (at 65 CFM)		COOLING (at 64 CFM)		NOTES
				Wa	SRE	Wa	TRE	
3	SummerAire	UltraVentor	120	84	68	70	45	

FAN SCHEDULE

MARK	MFR	MODEL	TYPE	m3/s (CFM)	RPM	WHEEL		DRIVE	ZONES	MOTOR		NOTES
						TYPE	MIN DIA			W (HP)	VOLTS	
4	Ecofit	2RREu15 180X35R	reverse mounted	227	2610	reverse mounted turbine	180	AC	1	49	115	

HVAC AIR CLEANING DEVICE SCHEDULE (Air Filter Schedule)

MARK	MFR	FILTERS				NOTES
		TYPE	MODEL	EFF	HOUSING	
5	GlasFlos	Pleated	Z-Line ZL	0.5	Aquarius II AP	

VARIABLE/CONSTANT VOLUME AIR TERMINAL UNIT SCHEDULE

MARK	MFR	MODEL	TYPE	COOLING		HEATING COIL										NOTES
				m3/s (CFM)	SPD (inH2O)	m3/s (CFM)	EAT	LAT	W (MBtuH)	L/s (GPM)	EWT	LWT	WPD	APD	ROWS	
6	FHP Manufacturing	Aquarius II AP025	N/A	750	0.4	750	70	78	19.84	8	50	38	4.7	0.4	3	

lumenHAUS
a brighter way. everyday.

Virginia Tech **Solar Decathlon 2009**
Virginia Polytechnic Institute and State University
www.lumenhaus.com

Mark	Date	Description
CD	06.02.09	Final Submission
4	04.17.09	Clarification #2
3	03.27.09	Clarification #1
DD	02.20.09	Design Development

Solar Decathlon 2009
Date: 06.02.09
Drawn: CEM + OO
Approved: JHW

HVAC EQUIPMENT SCHEDULE

M-611

DIFFUSERS

MARK	MFR	MODEL	TYPE	LENGTH (ft)	m3/s (CFM)	NOTES
2	Titus	Dynafuser	Linear Slot Difusser	2	84	

lumenHAUS
a brighter way. everyday.

Virginia Tech **Solar Decathlon 2009**
Virginia Polytechnic Institute and State University
www.lumenhaus.com

Mark	Date	Description
CD	06.02.09	Final Submission
4	04.17.09	Clarification #2
3	03.27.09	Clarification #1
DD	02.20.09	Design Development

Solar Decathlon	2009
Date:	06.02.09
Drawn:	CEM + OO
Approved:	JHW

HVAC DISTRIBUTION SCHEDULE

M-612

PHOTOVOLTAIC PANELS

42 PANELS COVER ROOF FOR FULL SOLAR GAIN

CONNECTED IN SERIES FOR MINIMAL HEAT LOSS

SUNNY BOY INVERTERS CONVERT POWER AT 95% EFFICIENCY

GRID–TIED FOR ENERGY AND MONETARY PAYBACK

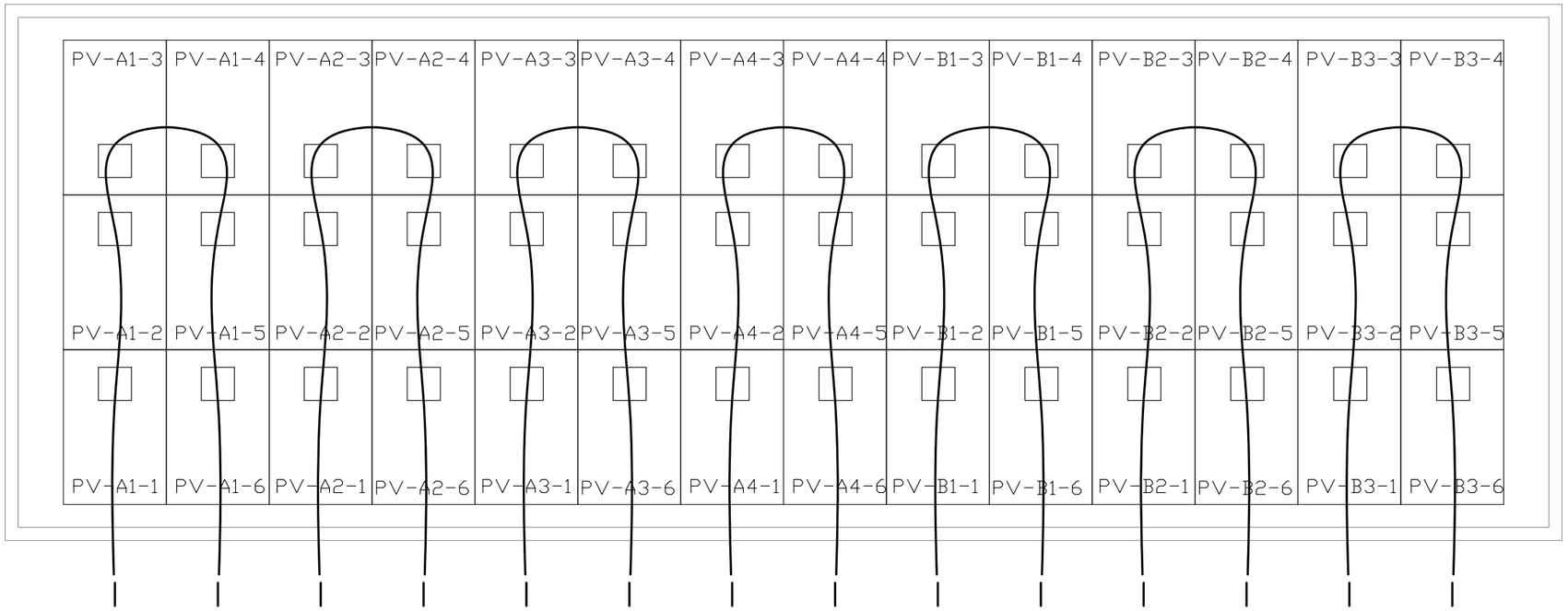

1
E-102

PHOTOVOLTAIC WIRING PLAN

SCALE: 1/4" = 1'-0"

0 5 10 15

lumenHAUS
a brighter way. everyday.

Virginia Tech **Solar Decathlon 2009**
Virginia Polytechnic Institute and State University
www.lumenhaus.com

Mark	Date	Description
CD	06.02.09	Final Submission
4	04.17.09	Clarification #2
3	03.27.09	Clarification #1
DD	02.20.09	Design Development

Solar Decathlon	2009
Date:	06.02.09
Drawn:	CEM + OO
Approved:	JHW

PV WIRING PLAN

E-102

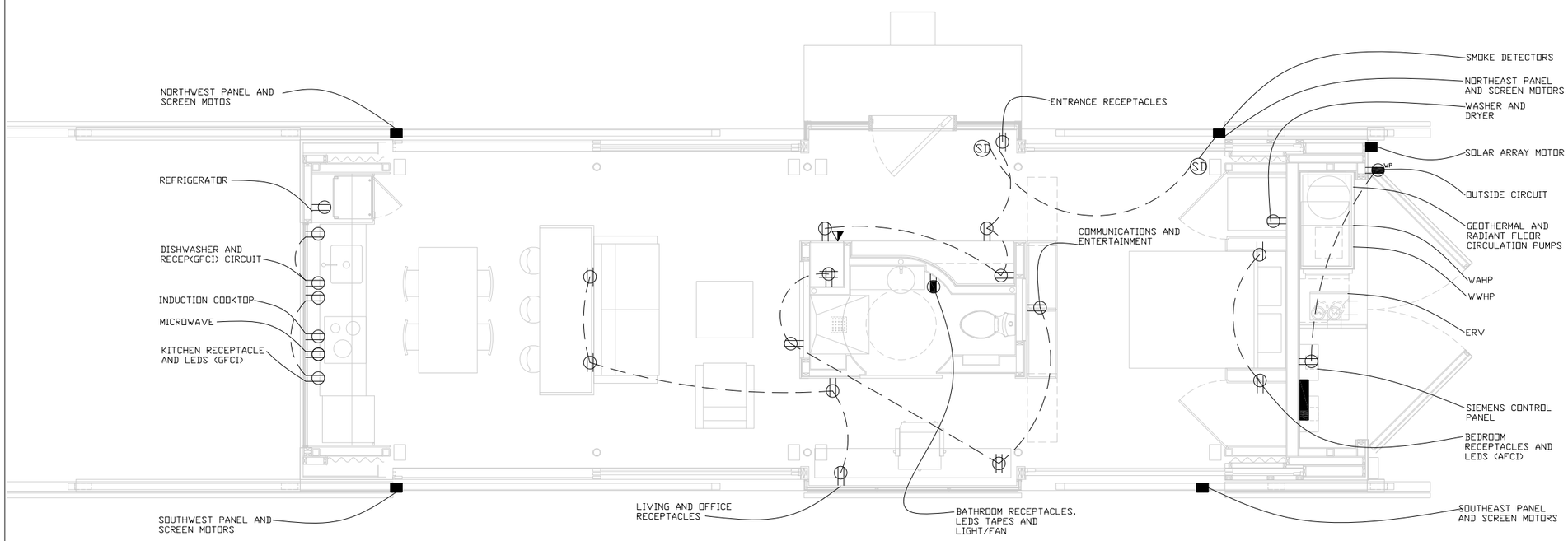

GENERAL SHEET NOTES

1. ALL WORK SHALL COMPLY WITH BUILDING STANDARDS, PERFORM WORK IN ACCORDANCE WITH RULES AND REQUIREMENT OF NEC 2008 & SOLAR DECATHLON
2. REFER TO ARCHITECTURAL DRAWINGS FOR EXACT LOCATION OF DEVICES AND FIXTURES ADDITIONAL ELECTRICAL REQUIREMENTS ON ARCHITECTURAL AND MECHANICAL DRAWINGS SHALL BE INCLUDED
3. PROVIDE COMPLETE ACCURATE TYPED PANELBOARD DIRECTORIEES AT COMPLETION OF CONSTRUCTION. PLACE IN PANEL
4. ALL WORK SHALL CONFORM WITH LATEST EDITION OF THE NATIONAL ELECTRIC CODE, NFPA 70
5. INSPECTOR SHALL FIELD VERIFY ALL LOCATION AND ELECTRICAL REQUIREMENTS OF MECHANICAL EQUIPMENT. INCLUDED ALL REQUIRED CONNECTION, OUTLETS, DISCONNECTS AND FUSES N EQUIPMENT
6. ALL SWITCH AND RECEPTABLE HEIGHTS SHALL MEET THE REQUIREMENTS OF THE AMERICANS WITH DISABILITIES ACT. RECEPTACLES SHALL BE A MINIMUM OF 15" AND SWITCHES A MAXIMUM OF 54" ABOVE FLOOR

1 / E-103 POWER/RECEPTACLE PLAN

SCALE: 3/16" = 1'-0"

0 5 10 15

lumenHAUS a brighter way. everyday.

Virginia Tech **Solar Decathlon 2009** www.lumenhaus.com

Virginia Polytechnic Institute and State University

Mark	Date	Description
CD	06.02.09	Final Submission
Δ	04.17.09	Clarification #2
Δ	03.27.09	Clarification #1
DD	02.20.09	Design Development

Solar Decathlon	2009
Date:	06.02.09
Drawn:	CEM + OO
Approved:	JHW

POWER PLAN

E-103

LED LIGHTING

LOW VOLTAGE WITH DECREASED POWER CONSUMPTION RATE

DIMMABLE TO CONSERVE ENERGY WHEN NATURAL DAYLIGHT IS INCREASED

TECHNOLOGICAL ADVANCEMENTS TO IMPROVE QUALITY OF LIGHT

USES LESS THAN 1/4 ENERGY OF FLOURESCENT BULB

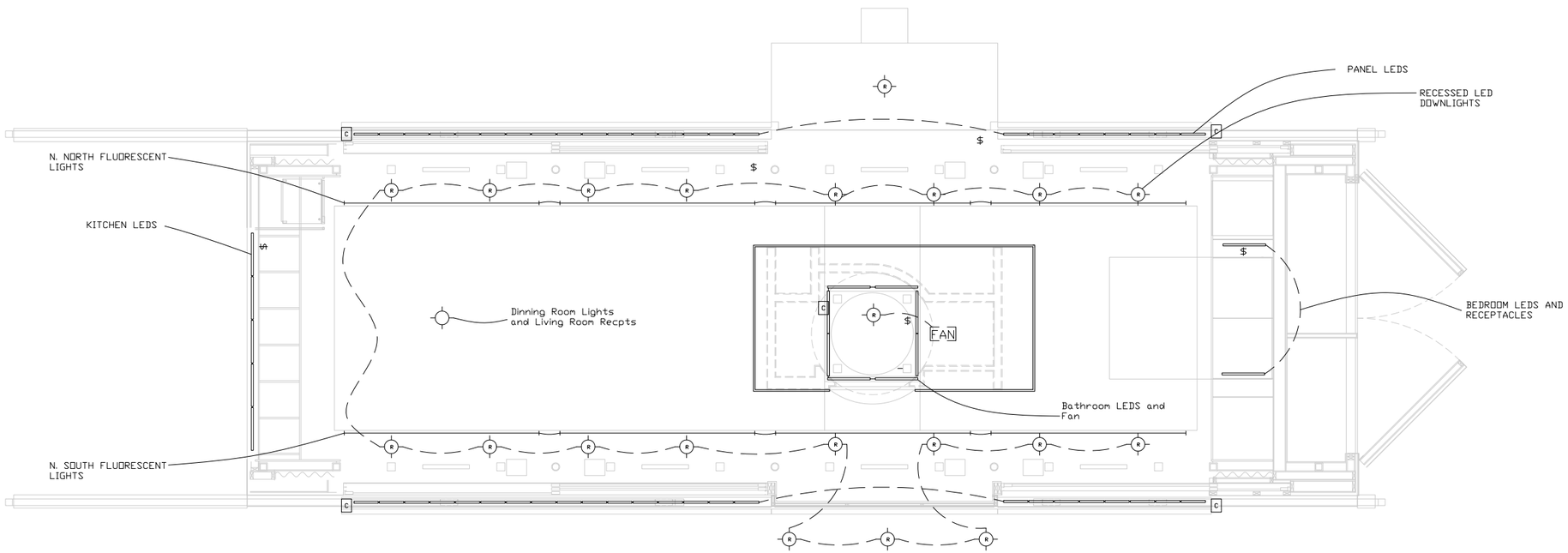

ELECTRICAL SYMBOLS LIBRARY

- CEILING FIXED LT
- LED
- $ WIRELESS SWITCH
- FAN BATHROOM FAN
- CEILING FIXED FLUORESCENT LT
- CEILING FIXED UP LT
- FIXED RECESSED LT
- C CONTROL BOX
- LED TAPE SMART DRIVE
- LED TAPE LT

1 / E-104

FLOOR PLAN - LIGHTING

SCALE: 3/16" = 1'-0"

0 5 10 15

lumenHAUS a brighter way. everyday.

Virginia Tech **Solar Decathlon 2009**

Virginia Polytechnic Institute and State University

www.lumenhaus.com

Mark	Date	Description
CD	06.02.09	Final Submission
Δ	04.17.09	Clarification #2
Δ	03.27.09	Clarification #1
DD	02.20.09	Design Development

Solar Decathlon	2009
Date:	06.02.09
Drawn:	CEM + OO
Approved:	JHW

LIGHTING PLAN

E-104

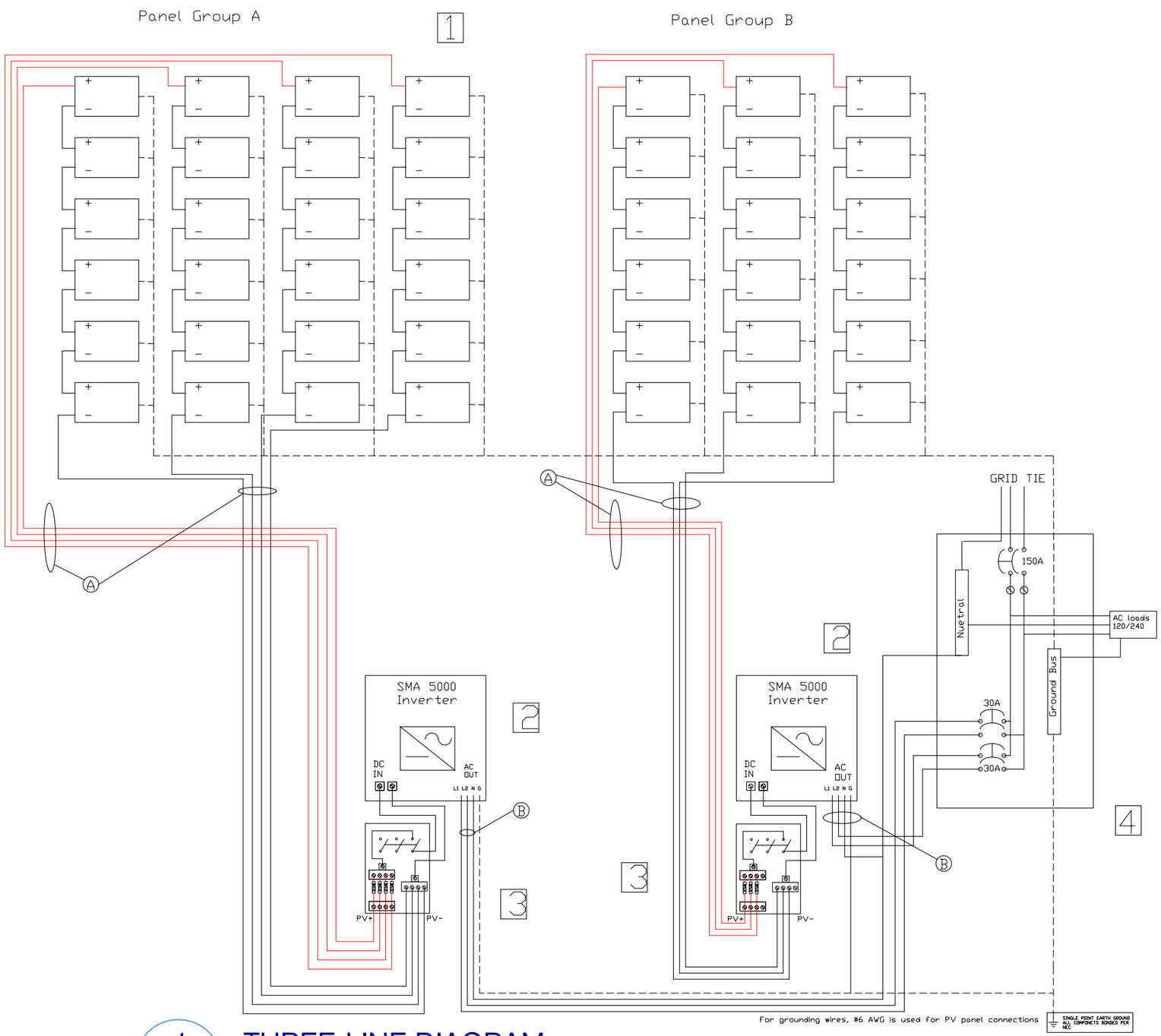

1 E-601 THREE-LINE DIAGRAM

GENERAL SHEET KNOTES

1. A #10 USE-2
2. B #8 THWN-2
3. C #6 THWN-2
4. FOR DETAILED CALCULATIONS FOR WIRE SIZES, SEE E-606
5. DESIGNED ACCORDING TO NEC 2008

SHEET KEYNOTES

1. PV ARRAY - (42) Sanyo 190W

2. Grid Tie Inverters 2x SMA-5000

3. DC Disconnect/Combiner Box intergrated with Sunny Boy Inverter,
   15 Amp fuses

4. Load Center 120/240 Vac Main Breaker Panel.
   Locate 2 30 A 2 pole Brkrs and 200 A Main Brkr
   Bus Bar Rated at 225 Amps

A. #10 USE-2, #6 ground wire (bare copper)
   Note:
1. Isc = 3.71 A DC.
   *Conductor must be sized for 3.71 A x 1.25 x 1.25 = 5.78 A
2. #10 USE-2 In Free Air is rated for 55A at 30° C and no more than 3 conductors in a raceway
3. #10 USE-2 is rated at 25.52 A (55 A x .58 x .8) @ 65° C with 4 conductors in a raceway

B. #6 THWN-2, 3 Conductors, #6 ground wire in ¾ EMT
   Note:
1. #6 THWN-2 in conduit is rated for 75A @ 30° C and no more than 3 current carrying conductors in a raceway

2. #6 THWN-2 is rated at 43.5 A (75A x .58) @ 65° C and 3 conductors in a raceway

lumenHAUS
a brighter way. everyday.

Virginia Tech Solar Decathlon 2009
www.lumenhaus.com
Virginia Polytechnic Institute and State University

Mark	Date	Description
CD	06.02.09	Final Submission
4	04.17.09	Clarification #2
3	03.27.09	Clarification #1
DD	02.20.09	Design Development

Solar Decathlon	2009
Date:	06.02.09
Drawn:	CEM + 00
Approved:	JHW

THREE-LINE DIAGRAM

E-601

ELECTRICAL PANEL-E SCHEDULE [240V / 120 V 1PH; 200A with 150A Main]

CIRCUIT	POLES	AMPS	FRAME	LOAD	NOTES
E1	2P	20A	A	NorthEast Panel and Screen Door Motors	GFCI
E2					
E3	2P	20A	A	NorthWest Panel and Screen Door Motors	GFCI
E4					
E5	2P	20A	A	SouthWest Panel and Screen Door Motors	GFCI
E6					
E7	2P	20A	A	SouthEast Panel and Screen Door Motors	GFCI
E8					
E9	2P	30A	A	Solar Array Motor	GFCI
E10					
E11	2P	40A	A	Induction Cooktop	
E12					
E13	2P	20A	A	WWHP	
E14					
E15	2P	10A	A	WAHP	
E16					
E17	2P	20A	A	Geothermal and Radiant Floor Circulation Pumps	
E18					
E19	1P	15A	A	Recessed LED Downlights	AFCI
E20	1P	15A	A	Kitchen LEDs and RECEPTACLES	GFCI
E21	1P	15A	A	Bedroom LEDs and Receptacles	AFCI
E22	1P	15A	A	Bathroom Lights and Receptacles/Fan	AFCI
E23	1P	15A	A	South Fluorescent Lights	AFCI
E24	1P	15A	A	North Fluorescent Lights	AFCI
E25	1P	20A	A	Dishwasher and Receptacle	GFCI
E26	1P	15A	A	Mech. Closet Receptacles and Outside Circuit	GFCI
E27	1P	20A	A	Refrigerator	
E28	1P	20A	A	Microwave	

lumenHAUS
a brighter way. everyday.

Virginia Tech **Solar Decathlon 2009**
Virginia Polytechnic Institute and State University
www.lumenhaus.com

Mark	Date	Description
CD	06.02.09	Final Submission
4	04.17.09	Clarification #2
3	03.27.09	Clarification #1
DD	02.20.09	Design Development

Solar Decathlon	2009
Date:	06.02.09
Drawn:	CEM + OO
Approved:	JHW

SCHEDULES

E-604

LIGHTING FIXTURE SCHEDULE (Expanded)

MARK	DESCRIPTION	LAMPS			POWER	LENS	FINISH	MOUNTING	QUANT.	NOTES
		MANUF.	TYPE	WATTS						
L1	Ceiling light fixture	Elliptipar	Cove Style F302	4x55w	120 V	Adjustable reflective	Matte white	Double slotted "L" brackets	24	Large concealed, remote ballast
L1a	Bulbs	Elliptipar	T5 Linear Fluorescent	14-35w	N/A	White Glass	White	Plug-in	96	Linear fluorescent light
L1b	Ballasts	Lutron Electronics Company, Inc.	Hi-lume 3D	N/A	120/277 V, 7 amps per ballast at 120 V	N/A	White	Screws	24	Electronic dimming ballast, performance of 100% to less than 1% fluorescent dimming
L2	LED floor lamp	Koncept Technologies Inc.	i-Tower High Power HL5000W-MBK	9.3w	N/A	Circular reflective	Silver or Black	Weighted base	1	High power energy efficient LED lamp with a built-in dimmer
L3	Linear LED fixtures, interior alcoves	Philips Color Kinetics	eW Cove Powercore 4200k	4.5w	100 / 120 / 230 VAC	Clear polycarbonate	Gloss Grey	Radialy adjustable bracket	10	Dimmable, efficient light for interior alcoves and niches
L4	Linear LED fixtures, under cabinet fixture	Philips Color Kinetics	eW Profile Powercore 2800k	5.5w	100 / 120 / 220 – 240 VAC (45 – 66 Hz)	Clear polycarbonate	White, Black or Grey	Flexible mounting	11	Flexible mounting
L5	Linear LED fixtures, downlight	Philips Color Kinetics	eW Downlight Powercore 2700k	15w	100, 120, 220 – 240, or 277 VAC	Clear polycarbonate	White, Black or Brushed Aluminum	Slotted through-holes	9	Low-profile, surface-mounted LED downlight
L6	Ceiling Mount Occupant Sensors	Lutron Electronics Company, Inc.	LOS-CDT-500R-WH	N/A	20-24V, PELV low-voltage, 33 mA nominal	N/A	White	Snap-locks to ceiling-mounted cover plate	3	Ceiling-mount dual-technology sensors, eliminates manual sensitivity and timer adjustments
L7	Daylight Sensor	Lutron Electronics Company, Inc.	C-SR-M1-WH EcoSystem	N/A	Low-voltage Class 2 20V, 33 mA nominal	N/A	N/A	Mount twist-lock cover plate using mounting screws	3	Allowing the system to automatically dim the lights when the available daylight is high
L8	Wireless Dimmer	Lutron Electronics Company, Inc.	Maestro MRF2-600M-XX	600w capacity	N/A	N/A	available in 7 Gloss and 20 Satin Colors	Wall mount	3	allows you to create custom light control solutions for a single room or multiple rooms
L8a	Wireless Controller	Lutron Electronics Company, Inc.	Maestro MRF2-3BRL-L-XX	N/A	N/A	N/A	available in a variety of standard colors	Free standing	3	Mobile light control

lumenHAUS
a brighter way. everyday.

Virginia Tech **Solar Decathlon 2009**
Virginia Polytechnic Institute and State University
www.lumenhaus.com

Mark	Date	Description
CD	06.02.09	Final Submission
4	04.17.09	Clarification #2
3	03.27.09	Clarification #1
DD	02.20.09	Design Development

Solar Decathlon	2009
Date:	06.02.09
Drawn:	CEM + OO
Approved:	JHW

SCHEDULES

E-605

WIRE AND CONDUIT SIZING

Wire Schedule	
A	**#10 USE-2, #6 ground wire (bare copper)**
	Note:
	1. Isc = 3.71 A DC. *Conductor must be sized for 3.71 A x 1.25 x 1.25 = 5.78 A
	2. #10 USE-2 In Free Air is rated for 55A at 30° C and no more than 3 conductors in a raceway
	3. #10 USE-2 is rated at 25.52 A **(55 A x .58 x .8) @ 65° C with 4 conductors in a raceway
B	**#6 THWN-2, 3 Conductors, #6 ground wire In ¾ EMT**
	Note:
	1. Continuous AC Output I = 21 A. Conductors must be sized at least 21 A x 1.25 = 26.25A
	2. #6 THWN-2 in conduit is rated for 75A @ 30° C and no more than 3 current carrying conductors in a raceway
	3. #6 THWN-2 is rated at 43.5 A ***(75A x .58) @ 65° C and 3 conductors in a raceway
*Temperature correct factors found in 690.8 (NEC 2008)	
**Adjustment factor from Table 310.15(B)(2)(a) (NEC 2008)	
***Adjustment factor from Table 310.16 (NEC 2008)	

VOC AND ISC CALCULATIONS

Solar Panel Group A
6 Panels per series string
4 strings in Parallel
Voc calculation based on -28°C (coldest Blacksburg, VA temp.)
*Voc = 1.25((0.170 x 53° + 68.1) x 6) = 578.325 V
Isc based on 65° C
**Isc(per String) = 1.25((.85mA x 40°) + 3.71) = 4.68 A
Isc (group total) = 4.68 x 4 = 18.72 A

Solar Panel Group B
6 Panels per series string
3 strings In Parallel
Voc calculation based on -28°C (coldest Blacksburg, VA temp.)
Voc = 1.25((0.170 x 53° + 68.1) x 6) = 578.325 V
Isc based on 65° C
Isc(per String) = 1.25((.85mA x 40°) + 3.71) = 4.68 A
Isc (group total) = 4.68 x 3 = 14.04 A
*Calculated using Temp. Coefficient and derating factor from 690.7 (NEC 2008)
**Calculated using Temp. Coefficient and derating factor from 690.8 (NEC 2008)

EQUIPMENT SCHEDULE

Sanyo HIT Double 190 Solar Panels	
Ratings @ 25° C	
Pmax	190 W
Vpm	55.3 V
Ipm	3.44 A
Voc	68.1 V
Isc	3.71 A
Series fuse rating	15 A
Temperature Coefficient (Voc)	-0.17 V / °C
Temperature Coefficient (Isv)	0.85 mA / °C

SMA 5000 US Inverter with DC Disconnect/Combiner	
Ratings	
Max PV power	6250 W
Max D.C Voltage Input	600 V
Peak Power Tracking	250-480 V
DC. Max Input Current	21 A
Number of Fused Series Strings	4 circuits fused and 15 A
AC Maximum Output Current	21A
AC Nominal Power	5000 W
Efficiency	96.80%

Inverter Output Breaker Rating
I = 21A * 1.25 = 26.25 A: Use 30 A Breaker

Load Center Rating	
Voltage	240/120 V
Current	200 A
Conductor	225 A
Maximum Infeed with Backfed Breakers	
I =225 x 1.25 = 281.25 A	
Sum of Infeed Current	
I = 200 + 60 = 260 A	

lumenHAUS
a brighter way. everyday.

Virginia Tech **Solar Decathlon 2009**
Virginia Polytechnic Institute and State University
www.lumenhaus.com

Mark	Date	Description
CD	06.02.09	Final Submission
4	04.17.09	Clarification #2
3	03.27.09	Clarification #1
DD	02.20.09	Design Development

Solar Decathlon 2009
Date: 06.02.09
Drawn: CEM + OO
Approved: JHW

SCHEDULES
E-606

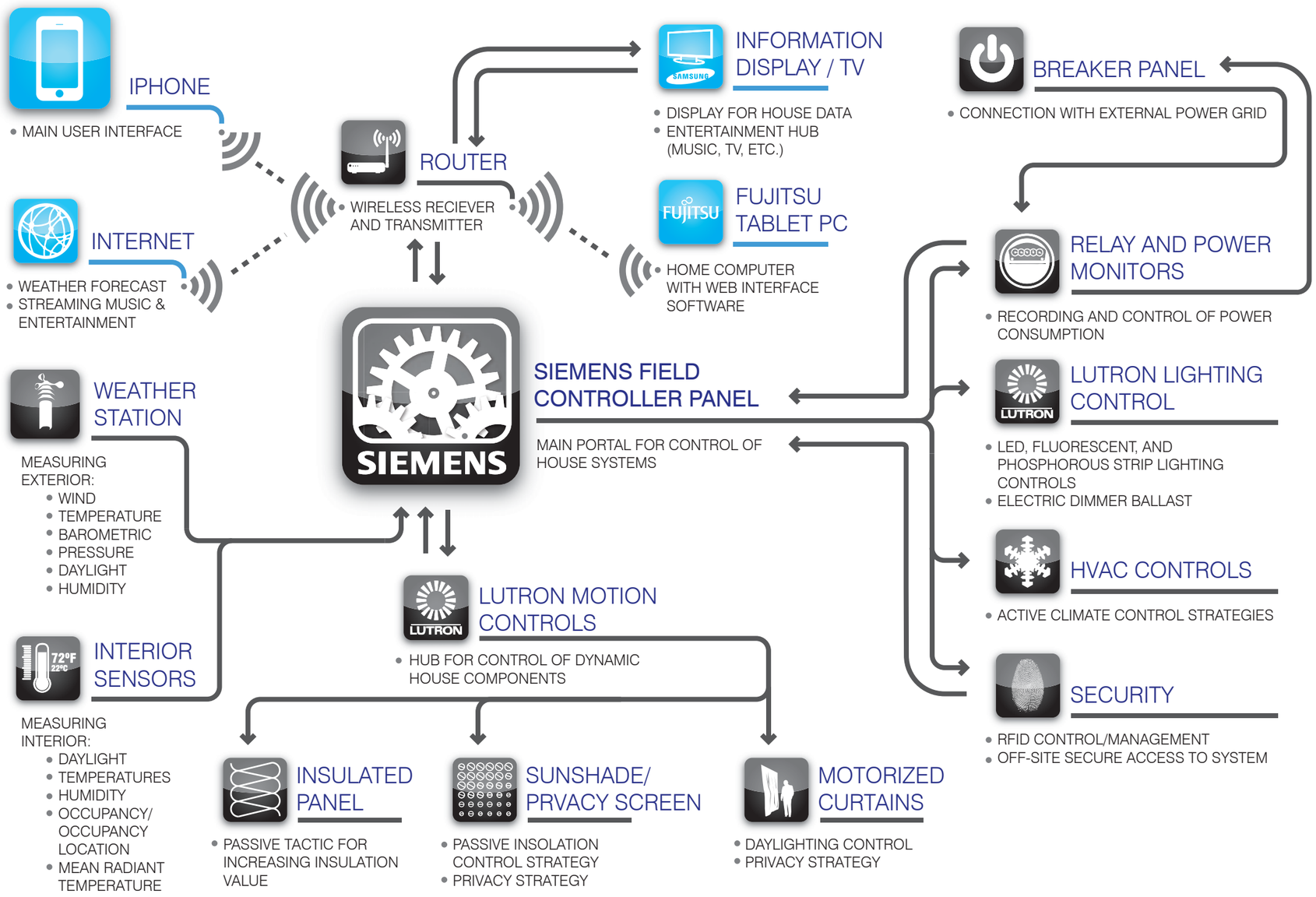

1
T-601

SCHEMATIC DIAGRAM

lumenHAUS
a brighter way. everyday.

Virginia Tech Solar Decathlon 2009
Virginia Polytechnic Institute and State University
www.lumenhaus.com

Mark	Date	Description
CD	06.02.09	Final Submission
△	04.17.09	Clarification #2
△	03.27.09	Clarification #1
DD	02.20.09	Design Development

Solar Decathlon	2009
Date:	06.02.09
Drawn:	CEM + 00
Approved:	JHW

SCHEMATIC DIAGRAM
T-601

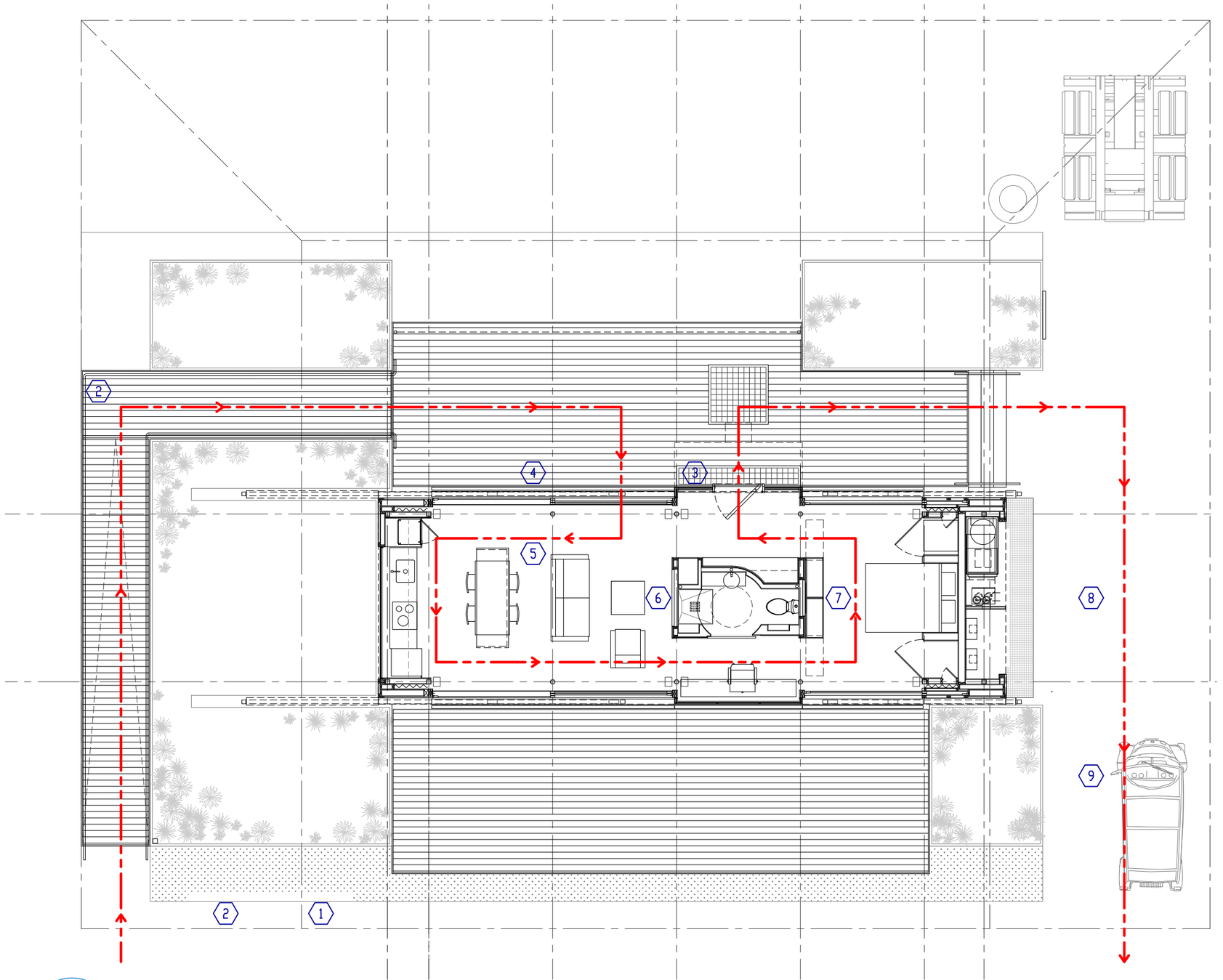

1
X-103

PUBLIC EXHIBIT PLAN

SCALE: 1/8" = 1'-0"

0 10 20 30

GENERAL SHEET NOTES

1. ALL OPENING TO BE 3'–0" MIN
2. RAMP & BRIDGE TO BE 5'–0" MIN CLEARANCE W/ HANDRAIL

SHEET KEYNOTES

1. SIGNAGE ON FRONT OF HOUSE WILL DISPLAY THE CONCEPT & ENGINEERING SYSTEMS OF THE HOUSE, SO THAT THE VISITORS HAVE KNOWLEDGE BEFORE ENTERING
2. CONTROL QUEUE & ANSWER AND QUESTIONS REGARDING THE HOUSE
3. FRONT ENTRANCE – DISCUSS CONCEPT OF THE HOUSE
4. SIGNAGE NEAR FRONT ENTRANCE WILL DISPLAY SPONSORS
5. LIVING ROOM/KITCHEN – DISCUSS SCREENS/CONCEPT OF SOLAR
6. VIDEO LOOPING ABOUT CONCEPT/CONSTRUCTION PROCESS
7. BEDROOM – DISCUSS PLAN, SCREENS/CONCEPT OF HOUSE
8. MECHANICAL CLOSET – DISCUSS GEOTHERMAL SYSTEM
9. AUTONOMOUS VEHICLE – DISCUSS TRANSPORTATION SYSTEM

lumenHAUS
a brighter way. everyday.

Virginia Tech **Solar Decathlon 2009**
Virginia Polytechnic Institute and State University
www.lumenhaus.com

Mark	Date	Description
CD	06.02.09	Final Submission
4	04.17.09	Clarification #2
3	03.27.09	Clarification #1
DD	02.20.09	Design Development

Solar Decathlon	2009
Date:	06.02.09
Drawn:	CEM + 00
Approved:	JHW

PUBLIC EXHIBIT PLAN

X-103

Signage

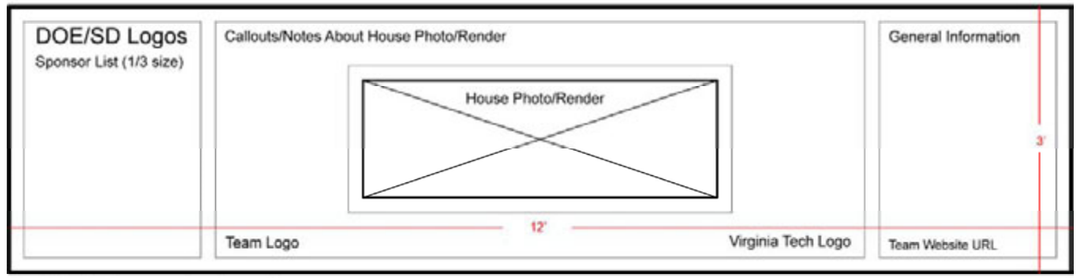

Material: Laminated paper on plywood on steel base

Handout

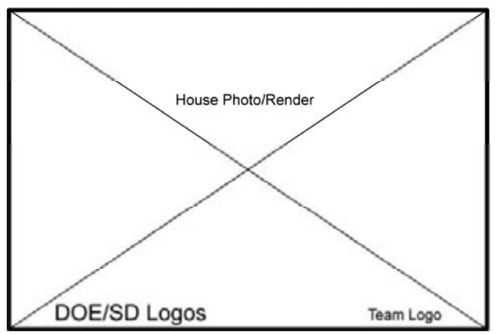

Material: Postcard paper stock — Front

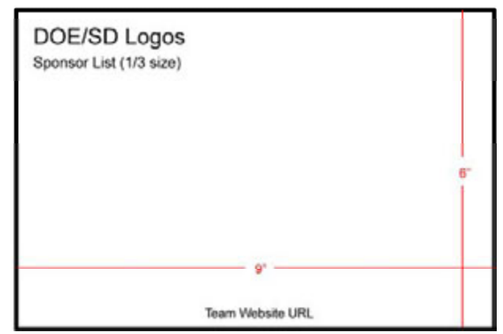

Material: Postcard paper stock — Back

Team Uniform

lumenHAUS
a brighter way. everyday.

Virginia Tech **Solar Decathlon 2009**
Virginia Polytechnic Institute and State University
www.lumenhaus.com

Mark	Date	Description
CD	06.02.09	Final Submission
4	04.17.09	Clarification #2
3	03.27.09	Clarification #1
DD	02.20.09	Design Development

Solar Decathlon	2009
Date:	06.02.09
Drawn:	CEM + OO
Approved:	JHW

PUBLIC COMMUNICATION MATERIALS

X-201

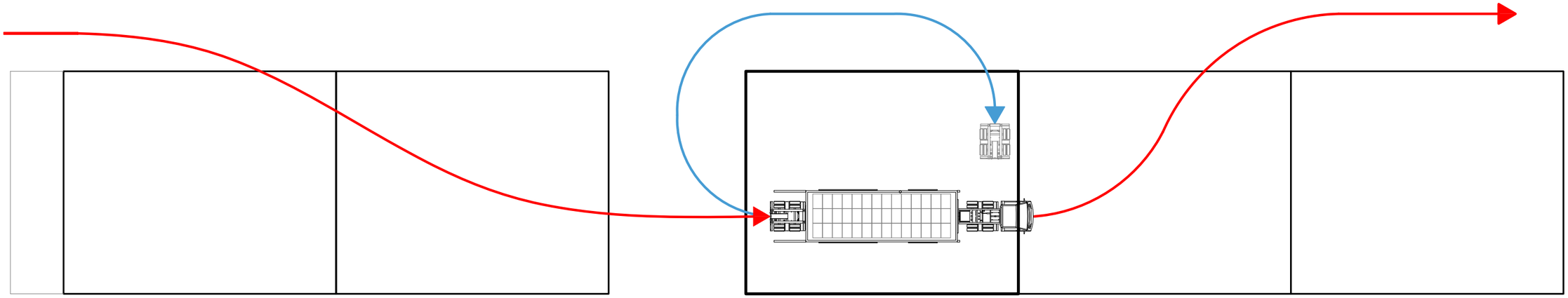

2
O-101
ARRIVAL SEQUENCE
SCALE: 1/32" = 1'-0"

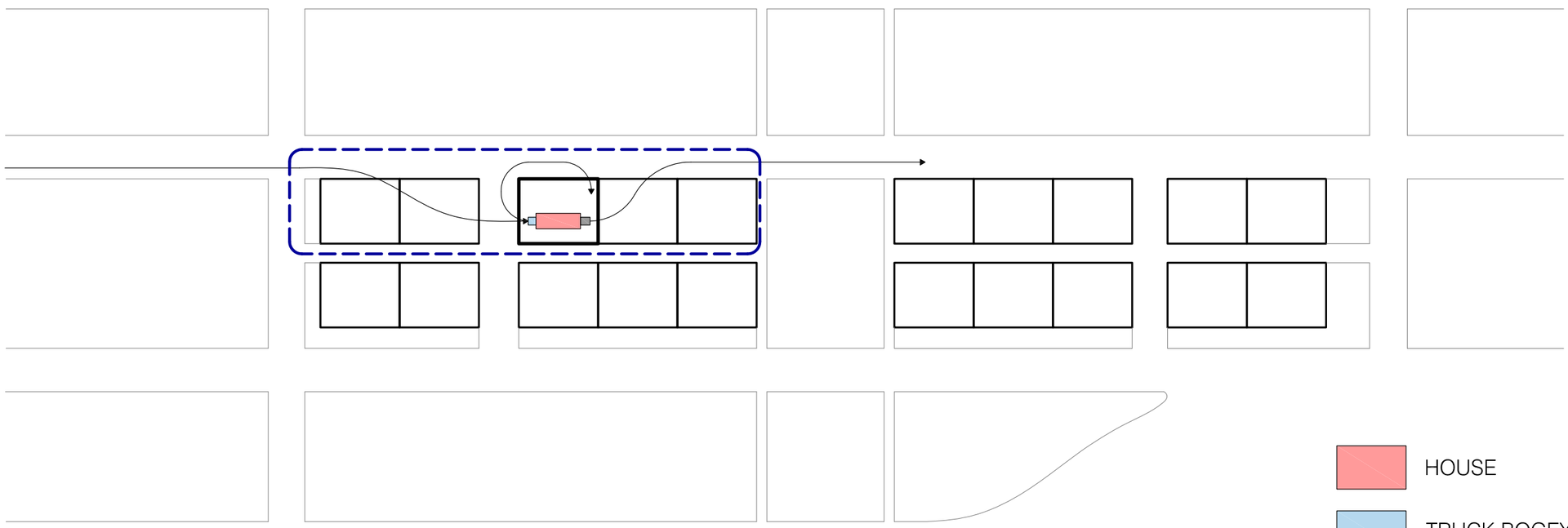

1
O-101
ARRIVAL SEQUENCE
SCALE: 1/128" = 1'-0"

lumenHAUS
a brighter way. everyday.

Virginia Tech **Solar Decathlon 2009**
Virginia Polytechnic Institute and State University
www.lumenhaus.com

Mark	Date	Description
CD	06.02.09	Final Submission
4	04.17.09	Clarification #2
3	03.27.09	Clarification #1
DD	02.20.09	Design Development

Solar Decathlon	2009
Date:	06.02.09
Drawn:	CEM + OO
Approved:	JHW

ARRIVAL SEQUENCE
O-101

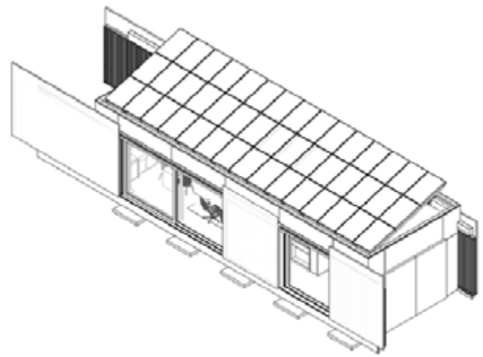

1 O-102 CONSTRUCTION - FOOTINGS

STEEL GRATE FOOTINGS/FOUNDATIONS ARE PLACED BY HAND AND INDIVIDUALLY LEVELED. CAB AND BOGEY ARE REMOVED.

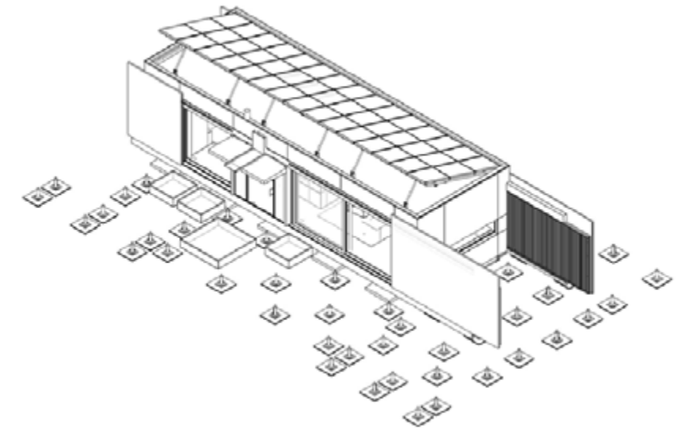

2 O-102 CONSTRUCTION - DECK JACKS

DECK JACKS ARE PLACED IN POSITION. ALL UNDER-DECK WATER TANKS ARE INSTALLED BY HAND OR WITH USE BY FORKLIFT.

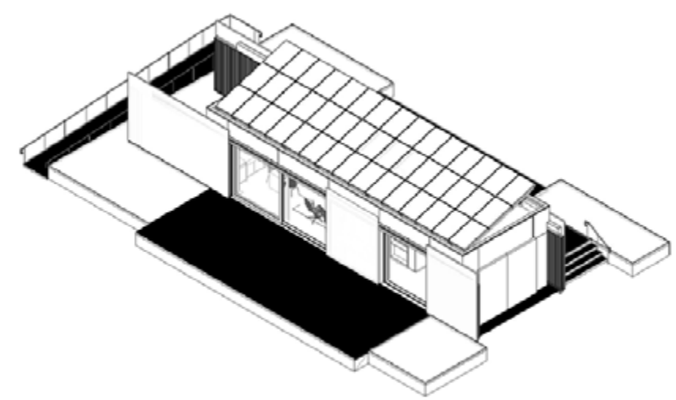

3 O-102 CONSTRUCTION - DECKING

PREFAB DECKING PANELS ARE DROPPED IN PLACE ON JACKS AND RAMPS AND STAIRS ARE INSTALLED.

lumenHAUS
a brighter way. everyday.

Virginia Tech **Solar Decathlon 2009**
Virginia Polytechnic Institute and State University
www.lumenhaus.com

Mark	Date	Description
CD	06.02.09	Final Submission
4	04.17.09	Clarification #2
3	03.27.09	Clarification #1
DD	02.20.09	Design Development

Solar Decathlon	2009
Date:	06.02.09
Drawn:	CEM + OO
Approved:	JHW

ASSEMBLY SEQUENCE

O-102

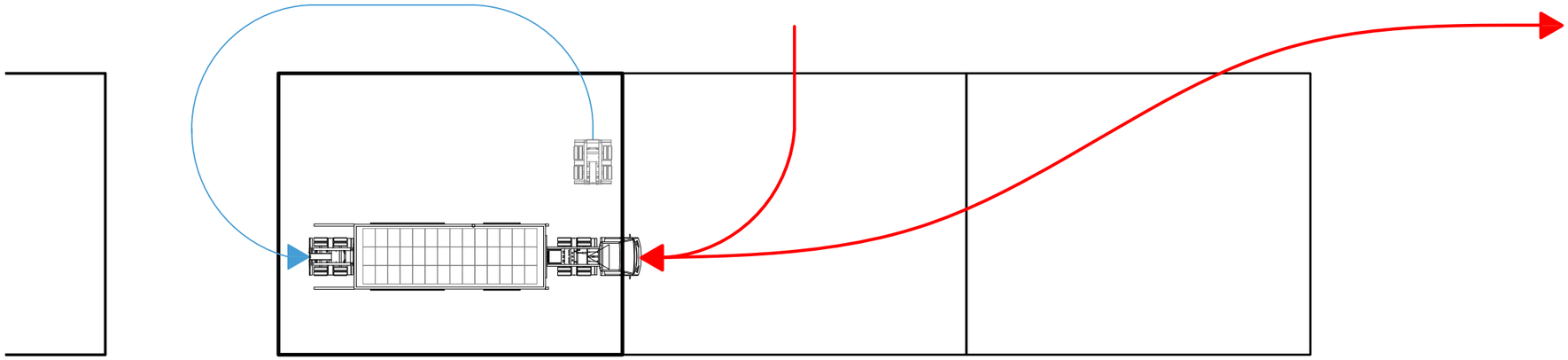

2
O-103
DEPARTURE SEQUENCE
SCALE: 1/32" = 1'-0"

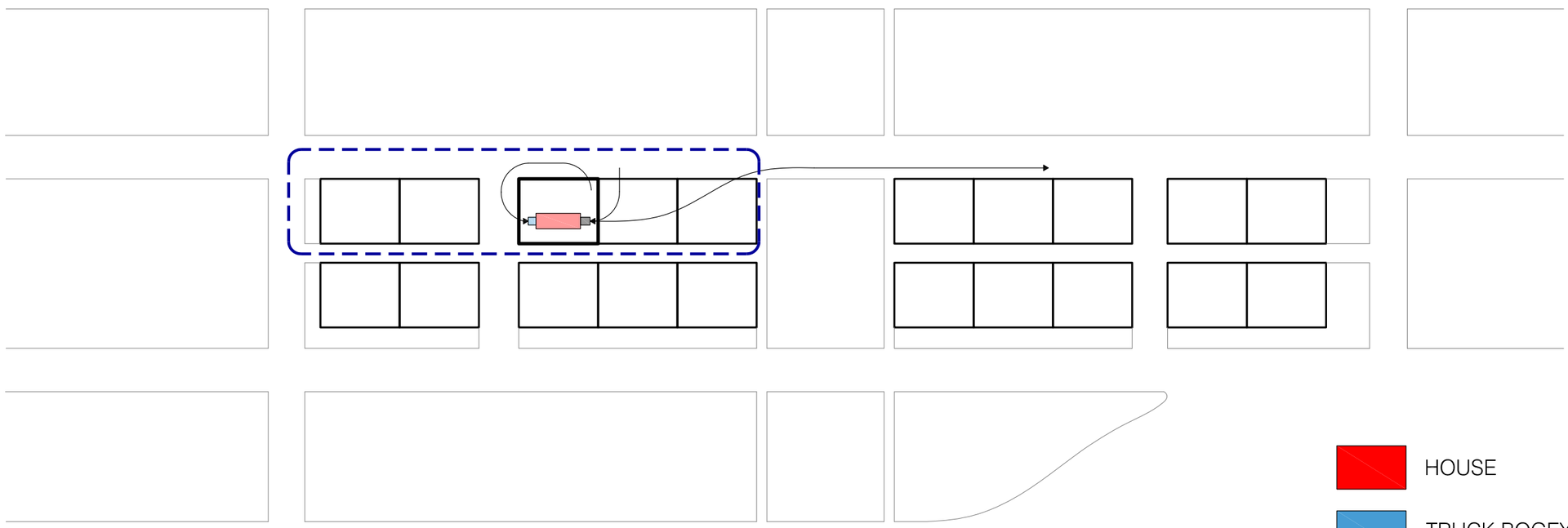

1
O-103
DEPARTURE SEQUENCE
SCALE: 1/128" = 1'-0"

lumenHAUS
a brighter way. everyday.

Virginia Tech Solar Decathlon 2009
Virginia Polytechnic Institute and State University
www.lumenhaus.com

Mark	Date	Description
CD	06.02.09	Final Submission
Δ	04.17.09	Clarification #2
Δ	03.27.09	Clarification #1
DD	02.20.09	Design Development

Solar Decathlon	2009
Date:	06.02.09
Drawn:	CEM + OO
Approved:	JHW

DEPARTURE SEQUENCE
O-103