PROJECT MANUAL

2009 SOLAR DECATHLON

SOLAR DECATHLON
CORNELL UNIVERSITY

COMPLETED BY:
Cornell University Solar Decathlon (CUSD)
909 Mitchell Street
Ithaca, NY 14850
(607) 277 – 7475

FOR:
National Renewable Energy Laboratory
Mail Stop 3214
1617 Cole Boulevard
Golden, Colorado 80401

DATE
JUNE 2, 2009

TABLE OF CONTENTS: PROJECT MANUAL

Page

3 Rule Compliance Checklist

4 Construction Specifications

232 Structural Drawings & Calculations

248 Detailed Water Budget

249 Summary of Unlisted Electrical Components

250 Retail Price Quote for Photovoltaics

251 Reconfigurable Features and Procedures

252 Interconnection Application

253 Energy Analysis Results and Discussion

Subjective Contest Support Documents

265 Architecture Design Narrative

266 Market Viability Narrative

268 Engineering Design Narrative

269 Lighting Narrative

271 Public Exhibit

RULE COMPLIANCE CHECKLIST

Rule Number	Rule Description	Requirement	Corresponding Drawing/ Construction Specification
4-2	Construction Equipment	Drawing(s) showing the assembly and disassembly sequences and the movement of heavy machinery on the competition site	O-101, O-102 / 02 43 13.13, 02 43 16
4-2	Construction Equipment	Data sheet(s) and/or specs for heavy machinery	O-601 / 02 43 13.13, 02 43 16
4-3	Ground Penetration	Drawing(s) showing the locations and depths of all ground penetrations on the competition site	A-204
4-4	Impact on the Turf	Drawing(s) showing the location, contact area, and soil bearing pressure of every component resting directly on the turf	S-102
4-5	Generators	Data sheet(s) and/or specifications for generators	O-601 / 02 43 16
4-6	Spill Containment	Drawing(s) showing the locations of all equipment, tanks, and pipes that will contaion fluids at any point during the event	L-109
4-6	Spill Containment	Data sheet(s) and/or specifications for all equipment, tanks, and pipes that will contain fluids at any point during the event	L-109 / 11 31 13, 11 31 23, Division 22, 23 21 23, 32 82 00
4-7	Lot Conditions	Calculations showing that structural design remains compliant even if 18" of vertical elevation change esits on the lot	S-502
4-7	Lot Conditions	Drawing(s) showing shimming menthods and materials to be used if 18" of vertical elevation change exists on the lot	S-502
5-2	Solar Envelope Dimentions	Drawing(s) showing the location of all house and site components and drawing references	G-02, G-201
5-2	Solar Envelope Dimentions	List of solar envelope exemption requests accompanied by justifications and drawing references	House will be contained in given envelope
6-1	Structural Design Approval	List of or marking on all sheets in the complete electronic Construction Documents that have been or will be stamped by the structural engineer in the hard copy, stamped structural submission; the stamped submission shall consist entirely of sheets or pages that also appear in the complete electronic Construction Document set	S-Series; RSA hard copies
6-2	Maximum Architectural Footprint	Drawing(s) showing all information needed by the Rules Officials to measure the architectural footprint electronically	A-107
6-2	Maximum Architectural Footprint	Drawing(s) showing all movable components that may increase the footprint if operated during contest week	N/A
6-2	Maximum Architectural Footprint	Shading calculations and/or diagrams for components that DO NOT shade the building above its finished floor height between 9am and 5pm EDT on October 1st (shading calculations and/or diagrams aren't necessary for components that are either shorter than finished floor height or obviously do not shade the entire building)	N/A
6-3	Minimum Conditioned Space	Drawing(s) showing space conditioning means in primary living spaces	A-108
6-4	House Entryways	Drawing(s) showing the accessible public tour route and the ground sufrace area that will be covered by organizer-provided walkway material	X-101
7-1	Placement	Drawing(s) showing the location of all vegetation and, if applicable, the movement of vegetation designed as part of an integrated mobile system	L-108
7-2	Watering Restrictions	Drawing(s) showing the layout and operation of greywater irrigation systems	L-105
8-1	PV Technology Limitations	Data sheet(s) and/or specifications for photovoltaic components	26 31 00
8-1	PV Technology Limitations	Retail Price quote for photovoltaic components	Invoice in Project Manual, p.28
8-3	Thermal Energy Storage	Drawing(s) showing the location of thermal energy storage components	N/A
8-3	Thermal Energy Storage	Data sheet(s) and/or specifications for thermal energy storage components	N/A
8-3	Thermal Energy Storage	Shading calculations and/or diagrams for thermal energy storage components (if necessary)	N/A
8-4	Batteries	Drawing(s) showing the location(s) and quantity of stand-alone, PV-powered devices	N/A
8-4	Batteries	Data sheet(s) and/or specifications for all stand-alone, PV-powered devices	N/A
8-5	Desiccant Systems	Drawing(s) describing the operation of the desiccant system	N/A
8-5	Desiccant Systems	Data sheet(s) and/or specifications for desiccant system components	N/A
8-6	Village Grid	Completed Interconnection Application Form	Form in Project Manual, p.27
8-6	Village Grid	Drawing(s) showing the locations of the photovoltaics, inverter(s), terminal box, meter housing, service equipment, and grounding means	E-101, E-102, E-201, A-204
8-6	Village Grid	Data sheet(s) and/or specifications for the photovoltaics, inverter(s), terminal box, meter housing, service equipment, and grounding means	Division 26
8-6	Village Grid	One-line electrical diagram	E-601
8-6	Village Grid	Calculation of service/feeder net computed load per NEC 220	E-603
8-6	Village Grid	Site plan showing the house, decks, ramps, tour paths, and terminal box	X-101, E-101
8-6	Village Grid	Elevation(s) showing the terminal box, meter housing, main utility disconnect, and other service equipment	A-204, E-201
9-4	Rainwater Collection	Drawing(s) showing the layout and operation of rainwater collection systems	L-105
9-6	Thermal Mass	Drawing(s) showing the locations of water-based thermal mass systems	N/A
9-6	Thermal Mass	Data sheet(s) and/or specfications for water-based thermal mass system components	N/A
10-2	Event Sponsor Recognition	Drawing(s) showing the dimensions, materials, artwork, and content of all communications materials including signage	X-102, X-201, X-202/ Communications Plan
10-3	Team Sponsor Recognition	Drawing(s) showing the dimensions, materials, artwork, and content of all communications materials including signage	X-102, X-201, X-202/ Communications Plan
11-4	Public Tours	Interior and exterior plans showing entire accessible tour route	X-101, X-102
11-4	Public Tours	Drawing(s) showing the dimensions, materials, artwork, and content of the handout	Communications Plan
11-4	Public Tours	Drawing(s) showing the dimensions, materials, artwork, and content of the team uniform	Communications Plan
11-7	House Configuration for Jury Tours	List of reconfigurable features and procedures for demonstrating these features to the *juries*	I-101, I-102, I-104 / List in Project Manual p.29

SECTION 00 01 00 – TABLE OF CONTENTS: CONSTRUCTION SPECIFICATIONS

DIVISION 02 - EXISTING CONDITIONS

02 43 13.13 Building Relocation
02 43 16 Structural Raising

DIVISION 05 - METALS

05 12 13 Structural Steel Framing
05 52 13 Pipe and Tube Railings
05 43 00 Slotted Channel Framing
05 60 00 Entrance Ramp
06 60 02 NFT Metal Troughs

DIVISION 06 - WOOD, PLASTICS, AND COMPOSITES

06 11 00 Wood Framing
06 11 02 Wood Framing Scaffolding Prop
06 11 03 Wood Framing NFT
06 12 00 Structurally Insulated Panels
06 15 00 Wood Decking
06 16 00 Sheathing
06 16 23 Subflooring
06 16 53 Exterior Sheathing
06 30 00 Finish Carpentry Landscape Skirting
06 40 23 Interior Architectural Woodwork
06 41 00 Architectural Wood Casework
06 72 00 Composite Structural Assemblies

DIVISION 07 - THERMAL AND MOISTURE PROTECTION

07 21 13.13 Foam Board Insulation
07 21 29 Spray-Foam Insulation
07 22 16 Roof Insulation
07 25 00 Weather Barriers
07 46 19 Steel Siding
07 56 00 Fluid-Applied Roofing
07 62 00 Sheet Metal Flashing
07 65 00.01 Flexible Flashing Tape
07 71 33 Manufactured Scuppers
07 72 00 Roof Vents
07 92 00 Joint Sealants

DIVISION 08 - OPENINGS

08 11 13 Hollow Metal Doors and Frames
08 14 00 Wood Doors
08 14 73 Sliding Wood Doors

08 42 26.10 Swinging Glass Door
08 52 00 Wood Windows
08 63 00 Metal-Framed Skylights
08 81 13.30 Sandblasted Glass
08 95 16 Wall Vents

DIVISION 09 - FINISHES

09 22 16.13 Metal Studs and Tracks
09 28 00 Backing Boards and Underlayments
09 29 00 Gypsum Board
09 31 13 Thin-Set Ceramic Tiling
09 34 00 Waterproofing- Membrane Tiling
09 64 29 Wood Strip and Plank Flooring
09 70 00 Wall Finishes
09 91 00.01 Waterproof Primer & Interior Paint
09 91 23 Interior Painting
09 96 46 Intumescent Painting
09 97 13.13 Interior Steel Coating

DIVISION 10 - SPECIALTIES

10 30 00 Fireplaces and Stoves
10 44 16.13 Portable Fire Extinguishers

DIVISION 11 - EQUIPMENT

11 26 00 Unit Kitchens
11 28 13 Computers
11 31 13 Residential Kitchen Appliances
11 31 23 Residential Laundry Appliances
11 52 00 Audio-Visual Equipment

DIVISION 12 - FURNISHINGS

12 24 13 Roller Window Shades
12 25 00 Window Treatment Operating Hardware
12 40 00 Furnishings and Accessories
12 58 13 Couches and Love Seats
12 58 14 Mattress
12 58 29 Beds

DIVISION 13 - SPECIAL CONSTRUCTION

13 34 00 Fabricated Engineered Structures

DIVISION 22 - PLUMBING

22 05 00 Common Work Results for Plumbing
22 05 16 Expansion Fittings and Loops for Plumbing Piping
22 05 23 General-Duty Valves for Plumbing Piping

22 05 76	Facility Drainage Piping Cleanouts
22 07 19	Plumbing Piping Insulation
22 11 13.23	Domestic Water Piping - Copper Pipe
22 11 13.74	Domestic Water Piping - PVC Pipe
22 11 16	Domestic Water Piping
22 11 16.01	Fittings and Connections
22 11 23	Domestic Water Pumps
22 12 00	Potable Water Storage Tank
22 12 23.13	Facility Steel, Indoor Potable-Water Storage Pressure Tank
22 13 00	Facilities Sanitary Sewerage NFT
22 13 01	Facilities Sanitary Sewerage NFT Start Valve
22 13 53	Facility Septic Tanks
22 13 19.36	Air-Admittance Valves
22 14 00	Facility Storm Drainage
22 35 00	Domestic Water Heat Exchangers
22 41 13.40	Water Closets
22 41 16	Residential Lavatories and Sinks
22 41 23	Residential Shower Receptors and Basins
22 41 39	Residential Faucets, Supplies and Trim
22 52 00	Fountain Plumbing System

DIVISION 23 - HEATING, VENTILATING, AND AIR-CONDITIONING (HVAC)

23 05 23	General-Duty Valves for HVAC Piping
23 09 00	Instrumentation and Control for HVAC
23 09 23	Direct-Digital Control System for HVAC
23 21 23	Hydronic Pumps
23 31 13	Round Ducts
23 31 13.16	Flat-Oval Spiral Ducts
23 31 13.19	Metal Duct Fittings
23 56 00.02	Heat Sink for Solar Thermal Systems
23 56 13.19	Heating Solar Vacuum-Tube Collectors
23 72 19	Fixed-Plate Air-to-Air Energy-Recovery Equipment
23 81 43	Air-Source Unitary Heat Pumps
23 82 19	Fan Coil Units

DIVISION 25 - INTEGRATED AUTOMATION

25 13 16	Integrated Automation Control and Monitoring Network Integration Panels
25 15 00	Integrated Automation Software
25 50 00	Integrated Automation Facility Controls

DIVISION 26 - ELECTRICAL

26 05 00	Common Work Results for Electrical
26 05 26	Grounding and Bonding for Electrical Systems
26 05 33.05	Raceway and Boxes for Electrical Systems
26 09 23	Lighting Control Devices
26 22 13	Low Voltage Distribution Transformers
26 24 16	Panelboards
26 24 26.20	Panelboard and Load Center Circuit Breakers
26 27 13	Electricity Metering
26 27 26	Wiring Devices

26 31 00 Photovoltaic Collectors
26 51 00 Interior Lighting
26 51 13 Interior Lighting Fixtures, Lamps, and Ballasts
26 55 29 Underwater Lighting
26 56 23 Area Lighting
26 56 33 Walkway Lighting
26 56 36 Flood Lighting
26 56 26 Landscape Lighting

DIVISION 28 - ELECTRONIC SAFETY AND SECURITY

28 31 46 Smoke Detention Centers

DIVISION 31 - EARTHWORK

31 32 00 Soil Stabilization

DIVISION 32 - EXTERIOR IMPROVEMENTS

32 82 00 Irrigation Pumps
32 93 00 Plants and Bulbs

SECTION 02 43 13.13 – BUILDING RELOCATION

PART 1 - GENERAL

1.1 SUMMARY

A. Section Includes: Methods, equipment and schedules necessary for the transportation of the Solar Decathlon House from Ithaca, NY to the New York State Fair in Syracuse, NY and from Syracuse, NY back to Ithaca, NY; and from Ithaca, NY to Washington, DC and back.

B. Submittals: Transportation schedule including shipping schedules as set by the company; Weight calculations; Assembly diagrams

C. Related Sections

1. 02 43 16 Structure Raising

1.2 SYSTEM DESCRIPTION

A. The double drop low boys will be used to carry the module down to DC. The Renegade LX40 will carry down the living room module and the LXT40 will be used to carry down the kitchen and bedroom module.

B. The crane will be used to take the three house sections off the lowboy trucks and place them on the National Mall in their proper location.

C. Design Requirements

1. The Solar Decathlon House is designed as a series of connectable parts, each of which shall not exceed the allowable dimensions of a flatbed truck, nor shall it exceed the allowable dimensions for highway transportation under federal highway laws. All components shall not exceed 13 ft 6 in in height from ground when resting on the bed of the truck(s).

D. Performance Requirements

1. The Solar Decathlon House as a whole must perform identically before and after transportation and re-construction.
2. The Solar Decathlon House as a series of parts shall be transported using specified packing and securing methods and no components shall be damaged during transportation.

PART 2 - PRODUCT

2.1 MANUFACTURERS

A. Fountaine trailer Company, 430 Letson Rd Haleyville, AL 34465. Tel: (800) 821-6535; Fax: (205) 485-8985

B. Terex Corporation, 200 Nyala Farm Road, Westport, CT 06880 USA; tel: (203) 222-7170; fax: (203) 222-7976; email;info@terex.com

2.2 PRODUCTS

A. Lowboy trucks
   1. Renegade LX40
   2. Renegade LXT40
   3. http://www.fontainetrailer.com/

B. Terex T340-1 Truck Crane 40 t (36.36 mt) Maximum Boom Length 30 - 94 ft
   1. Model #: T340-1
   2. http://www.terex.com/main.php?obj=prod&action=VIEW&id=d65db72ae72987e738c2ee4044594260&nav=prod&cid=487c16c8ff145d0843f57512eafb8592

PART 3 - EXECUTION

3.1 QUALITY ASSURANCE

A. Provide rental history form and ensure that product is in proper and good working order before accepting the delivery of the product.

B. Truck and crane records can be requested if equipment does not look to be in proper working order.

3.2 DELIVERY, STORAGE & HANDLING

A. The product should be rented well in advance to ensure the rental company will have it in stock and available to rent.

B. The exact time of delivery needs to be coordinated with the team's logistical schedule.

3.3 INSTALLATION

A. The Solar Decathlon House and all of its components shall be disassembled, reassembled, packed, secured, and shipped by designated individuals in accordance with the specified instructions.

B. The Solar Decathlon House, in its disassembled form, shall be transported via large truck and shall be secured to the flatbed such that no damages occur during the transportation of the house to various sites.

END OF SECTION 02 43 13.13

SECTION 02 43 16 – STRUCTURAL RAISING

PART 1 - GENERAL

1.1 SUMMARY

A. Submittals: Product data (for all products, rented and bought); construction documents

B. Related Sections

1. 02 43 13.13 Building Relocation

2. 05 12 13 Architecturally Exposed Structural Steel Framing

1.2 SYSTEM DESCRIPTION

A. The telehandler will be used to help erect the PV array for the house and unload and load the box trucks during set up and take down.

B. The Generator will provide enough power for CUSD to use power tools, lights, and other electrical devices at the same time and will not slow down construction.

C. Design Requirements

1. The Solar Decathlon House is designed in a series of connectable modules which will be transported separately and assembled on-site. Each module will be crane lifted from the truck bed, placed on temporary foundation and attached to Ellis screw jacks.

D. Performance Requirements

1. Alignment: The Solar Decathlon House, after its raising at the site, shall look identical to the original design. The alignment of the house (e.g. which way it faces) shall meet the standards as set by the competition rules.
2. Weight considerations: The Solar Decathlon House shall be raised in such a way that it does not exceed the stated weight limitations of the equipment used. It shall be assembled and attached on-site in such a way that it also does not exceed the weight limitations of the temporary foundation.
3.

PART 2 - PRODUCTS

2.1 MANUFACTUERS

A. JLG Industries, Inc. 1 JLG Dr., McConnellsburg, PA 17233

B. MQ Power, 1800 Waters Ridge Dr. Suite 500, Lewisville, TX 75057, telephone: 800-883-2551; email:mqpower@multiquip.com

2.2 MATERIALS

A. 6,000 lb LULL Telehandlers
   1. Part Number 644E-42
   2. http://www.jlg.com/en-US/Model.html?BaseProductLineNodeId=c662180a-b3fa-45f8-b066-07980981e2ba&ProductLineNodeId=1c1d646a-b121-4b9a-ae94-76d4cae85da4&GroupProductLineNodeId=80b5517a-0af7-479b-a3f3-9618d495523d&ModelId=2036e87a-2258-462a-b9eb-37e7998dea69

B. Whisper Watt Ultra Silent 20kw Diesel Generator
   1. Model Number DCA25USI
   2. http://www.mqpower.com/DCA25USI.html

PART 3 - EXECUTION

3.1 QUALITY ASSURANCE

A. The product should be rented well in advance to ensure the rental company will have it in stock and available to rent. Exact time of delivery needs to be coordinated with team's logistical schedule.

B. Provide rental history form and ensure that product is in proper and good working order before accepting the delivery of the product.

3.2 DELIVERY, STORAGE & HANDLING

3.3 INSTALLATION

A. All raising and lowering of the Solar Decathlon House will be performed in accordance with safety protocols and will not exceed manufacturers stated weight limitations during lifting.

B. The generator should sit in its proper place as to the set-up site plan.

END OF SECTION 02 43 16

SECTION 05 12 13 – ARCHITECTURALLY EXPOSED STRUCTURAL STEEL FRAMING

PART 1 - GENERAL

1.1 SUMMARY

A. Submittals: Shop Drawings, Welding Procedure Specifications (WPSs) and mill test reports

B. Comply with applicable provisions of the following:

1. AISC 360.
2. RCSC's "Specification for Structural Joints Using ASTM A 325 or A 490 Bolts."

1.2 SYSTEM DESCRIPTION

A. Steel members will be assembled by Accufab custom fabrication to make the module, courtyard, and ramp sub-structures.

PART 2 - PRODUCTS

2.1 MANUFACTURER

A. Accufab Inc., 232 Cherry St., Ithaca, NY 14850; telephone: (607) 273.3706; email: office@accufabinc.com; website: http://www.accufabinc.com

B. Ellis Manufacturing Co., Inc., 4803 N. Cooper Ave., Oklahoma City, OK 73118; tel: (405) 528-4671; fax: (405) 528-1796

2.2 MATERIALS

A. Wide flange beams (ASTM A992)
B. C Channels (ASTM A36)
C. HSS Columns (ASTM A992)
D. Cap components (ASTM A36)
E. Plates (ASTM A36)
F. Bolt connections (ASTM A325)
G. Hollow structural sections (ASTM A500, GRADE B)
H. Structural Pipe sections (ASTM 501, GRADE B)
I. Angle (ASTM A36)
J. Ellis Timber Jacks
   1. TJ-4, TJ-6 (15,000 lb capacity)
   2. http://www.ellisok.com/ellisok/timberjackproducts_screwjacks.html

2.3 QUALITY ASSURANCE

A. Structural Steel: Fabricate and assemble in shop to greatest extent possible. Fabricate according to AISC's "Code of Standard Practice for Steel Buildings and Bridges" and AISC 360.

B. Weld Connections: Comply with AWS D1.1/D1.1M for tolerances, appearances, welding procedure specifications, weld quality, and methods used in correcting welding work.

PART 3 - EXECUTION

3.1 INSTALLATION

A. Each module shall be constructed with careful consideration to overall assembly. Align and adjust various members forming part of complete frame or structure before permanently fastening. Before assembly, clean bearing surfaces and other surfaces that will be in permanent contact with members. Perform necessary adjustments to compensate for discrepancies in elevations and alignment.

END OF SECTION 05 12 13

SECTION 05 25 00 ALUMINUM JOIST FRAMING

PART 1 - GENERAL

1.1 SUMMARY

A. Submittals: Shop drawings

B. Related Sections:
   1. 05 12 00 Structural Steel Framing

1.2 SYSTEM DESCRIPTION

A. Footers shall be used under the jacks to distribute bearing pressure on the ground.

PART 2 - PRODUCTS

2.1 MANUFACTURER

A. Accufab Inc., 232 Cherry St., Ithaca, NY 14850; telephone: (607) 273.3706; email: office@accufabinc.com; website: http://www.accufabinc.com

2.2 MATERIALS

A. Custom fabricated 2’x ¾” aluminum footers

B. Custom fabricated 3’x ¾” aluminum footers

PART 3 - EXECUTION

3.1 INSTALLATION

A. Footers shall be installed with structural steel framing system.

END OF SECTION 05 25 00

SECTION 05 43 00 – SLOTTED CHANNEL FRAMING

PART 1 - GENERAL

1.1 SUMMARY

A. Submittals: Manufacturer's product data and installation instructions, drawings

B. Related Sections:
   1. 26 31 00 Photovoltaic Collectors

1.2 SYSTEM DESCRIPTION

A. Design Requirements: Power Strut system shall support PV structure above roof.

B. Performance Requirements
   1. Power Rail mounting systems shall comply with IBC requirements.

PART 2 - PRODUCTS

2.1 MANUFACTURERS

A. Allied Tube & Conduit, 16100 S. Lathrop Ave., Harvey, IL 60426-6021; tel: (800) 882-5543.

2.2 MATERIALS

A. Power Strut Channel with Elongated Holes
   1. PS200EH-10PG
   2. http://www.alliedtube.com/electrical-raceways/strut-channel/powerstrut.asp

2.3 ACCESSORIES

A. Hardware Mounting Clamps as needed to support photovoltaic panels.

PART 3 - EXECUTION

3.1 INSPECTION

A. Installer should examine condition of received parts from manufacturer, conditions of roof onto which installation shall occur. Do not proceed with work until unsatisfactory conditions are corrected.

3.2 INSTALLATION

A. Strictly comply with manufacturer's instructions, recommendations, and approved details. Securely anchor aluminum structure to roof at specified locations. Refer to installation guide.

B. Installation of Power Strut system should strictly follow drawings for placement and waterproofing details at connections to roof.

END OF SECTION 05 43 00

SECTION 05 52 13– PIPE AND TUBE RAILINGS

PART 1 - GENERAL

1.1 SUMMARY

A. Submittals:
   1. Shop Drawings: Show fabrication and installation of handrails and railings. Include plans, elevations, sections, component details, and attachments to other Work.
   2. For installed handrails and railings indicated to comply with design loads, include structural analysis data signed and sealed by the qualified professional engineer responsible for their preparation.
   3. Qualification Data: For firms and persons specified in “Quality Assurance” Article to demonstrate their capabilities and experience. Include lists of completed projects with project names and addresses, names and addresses of architects and owners, and other information specified.
   4. Welder Certificates: Signed by Contractor certifying that welders comply with requirements specified under the “Quality Assurance” article

B. Related Sections

   1. 05 60 00 Entrance Ramp

1.2 SYSTEM DESCRIPTION

A. Definition: Steel pipe and tube handrails and guardrails to run along the ramp and courtyard.

B. Performance Requirements:
   1. General: In engineering handrails and railings to withstand structural loads indicated, determine allowable design working stresses of handrails and railing materials based on the following:
      a. Cold-Formed Structural Steel: AISI SG-673, Part I, “Specification for the Design of Cold-Formed Steel Structural Members.”

      b. Structural Performance of Handrails and Railings: Provide handrails and railings capable of withstanding the following structural loads without exceeding allowable design working stresses of materials for handrails, railings, anchors, and connections:
      c. Top Rail of Guards: Capable of withstanding the following loads applied as indicated: Concentrated load of 200 lbf (890 N) applied at any point and in any direction. Uniform load of 50 lbf/ft. (730 N/m) applied horizontally and concurrently with uniform load of 100 lbf/ft. (1460 N/m) applied vertically downward. Concentrated and uniform loads above need not be assumed to act concurrently.
      d. Handrails Not Serving As Top Rails: Capable of withstanding the following loads applied as indicated: Concentrated load of 200 lbf (890 N) applied at any point and in any direction. Uniform load of 50 lbf/ft. (730 N/m) applied in any direction. Concentrated and uniform loads above need not be assumed to act concurrently.

PART 2 - PRODUCTS

2.1 MANUFACTURER

A. Accufab Inc., 232 Cherry St. Ithaca, NY 14850; telephone (607) 273-3706; Fax (607) 277-8295; email: office@accufabinc.com; website: http://www.accufabinc.com/home.htm

2.2 MATERIALS

A. 1-1/2" OD Round Steel Pipe
   1. ASTM A 53, Galvanized finish, Type S Grade A, standard weight (Schedule 40), unless another grade and weight are required by structural loads.

B. Square Steel tubing to provide toe kick at bottom of railing.
   1. ASTM A 500 Grade B

C. 1" Diameter Metal Rode with two cotter pins on each side to hold in place.
   1. ASTM A36 M

D. 1/8" Thick Angle Iron to be bolted to the C-Channel to support the black locust decking.
   1. ASTM A 36

E. 1-1/4" pipe to pipe union.

F. ¼" diameter hex screw for securing splice.

G. Structural Carriage Bolts 2" in length used to hold the four ramp sections together
   1. A 325-ST Bolts

2.3 WELDING MATERIALS, FASTENERS, AND ANCHORS

A. Welding Electrodes and Filler Metal: Provide type and alloy of filler metal and electrodes as recommended by producer of metal to be welded and as required for color match, strength, and compatibility in fabricated items.

B. Fasteners for Anchoring Handrails and Railings to Other Construction: Select fasteners of type, grade, and class required to produce connections suitable for anchoring handrails and railings to other types of construction indicated and capable of withstanding design loads.
   1. For steel handrails, railings, and fittings, use plated fasteners complying with ASTM B 633, Class Fe/Zn 25 for electrodeposited zinc coating.

C. Cast-in-Place and Post-installed Anchors: Anchors of type indicated below, fabricated from corrosion-resistant materials with capability to sustain, without failure, a load equal to six times the load imposed when installed in unit masonry and equal to four times the load imposed when installed in concrete, as determined by testing per ASTM E 488 conducted by a qualified independent testing agency.

2.4 FABRICATION

A. General: Fabricate handrails and railings to comply with requirements indicated for design, dimensions, member sizes and spacing, details, finish, and anchorage, but not less than that required to support structural loads.

B. Form changes in direction of railing members as follows:
   1. As detailed

C. Form simple and compound curves by bending members in jigs to produce uniform curvature for each repetitive configuration required; maintain cylindrical cross section of member throughout entire bend without buckling, twisting, cracking, or otherwise deforming exposed surfaces of handrail and railing components.

D. Welded Connections: Fabricate handrails and railings for connecting members by welding. Cope components at perpendicular and skew connections to provide close fit, or use fittings designed for this purpose. Weld connections continuously to comply with the following:
   1. Use materials and methods that minimize distortion and develop strength and corrosion resistance of base metals.
   2. Obtain fusion without undercut or overlap.
   3. Remove flux immediately.
   4. At exposed connections, finish exposed surfaces smooth and blended so no roughness shows after finishing and welded surface matches contours of adjoining surfaces.

E. Brackets, Flanges, Fittings, and Anchors: Provide wall brackets, flanges, miscellaneous fittings, and anchors to interconnect handrail and railing members to other work, unless otherwise indicated.

F. Provide inserts and other anchorage devices for connecting handrails and railings to concrete or masonry work. Fabricate anchorage devices capable of withstanding loads imposed by handrails and railings. Coordinate anchorage devices with supporting structure.

G. Shear and punch metals cleanly and accurately. Remove burrs from exposed cut edges.

H. Ease exposed edges to a radius of approximately 1/32 inch (1 mm), unless otherwise indicated. Form bent-metal corners to smallest radius possible without causing grain separation or otherwise impairing the Work.

I. Provide weep holes or another means to drain entrapped water in hollow sections of handrail and railing members that are exposed to exterior or to moisture from condensation or other sources.

J. Cut, reinforce, drill, and tap components, as indicated, to receive finish hardware, screws, and similar items.

2.5 QUALITY ASSURANCE

A. Professional Engineer Qualifications: A professional engineer who is legally qualified to practice in jurisdiction where Project is located and who is experienced in providing engineering services of the kind indicated. Engineering services are defined as those performed for

installations of handrails and railings that are similar to those indicated for this Project in material, design, and extent.

B. Welding Standards: Comply with applicable provisions of AWS D1.7 Structural Welding Code-Steel.

C. Source Limitations: Obtain each type of handrail and railing through one source from a single manufacturer.

PART 3 - EXECUTION

3.1 DELIVERY, STORAGE & HANDLING

A. Ordering: Coordinate installation of anchorages for handrails and railings. Furnish setting drawings, templates, and directions for installing anchorages, including sleeves, concrete inserts, anchor bolts, and items with integral anchors, that are to be embedded in concrete or masonry. Deliver such items to Project site in time for installation.

3.2 INSTALLATION

A. Fit exposed connections together to form tight, hairline joints

B. Perform cutting, drilling, and fitting required to install handrails and railings. Set handrails and railings accurately in location, alignment, and elevation; measured from established lines and levels and free from rack
   1. Do not weld, cut, or abrade surfaces of handrail and railing components that have been coated or finished after fabrication and that are intended for field connection by mechanical or other means without further cutting or fitting
   2. Set posts plumb within a tolerance of 1/16 inch in 3 feet (2 mm in 1 m).
   3. Align rails so variations from level for horizontal members and from parallel with rake of steps and ramps for sloping members do not exceed 1/4 inch in 12 feet (5 mm in 3 m).

C. Adjust handrails and railings before anchoring to ensure matching alignment at abutting joints. Space posts at interval indicated, but not less than that required by structural loads.

D. Instructions and special considerations for installation process.

E. Fastening to In-Place Construction: Use anchorage devices and fasteners where necessary for securing handrails and railings and for properly transferring loads to in-place construction.

END OF SECTION 05 52 13

SECTION 05 60 00 – ENTRANCE RAMP

PART 1 - GENERAL

1.1 SUMMARY

A. Submittals:
   1. Shop Drawings: Show fabrication and installation of handrails and railings. Include plans, elevations, sections, component details, and attachments to other Work.
   2. Qualification Data: For firms and persons specified in “Quality Assurance” Article to demonstrate their capabilities and experience. Include lists of completed projects with project names and addresses, names and addresses of architects and owners, and other information specified.
   3. Welder Certificates: Signed by Contractor certifying that welders comply with requirements specified under the “Quality Assurance” article

B. Related Sections
   1. Section 06 15 00 Wood Decking
   2. Section 13 34 00.D Fabricated Engineered Structures
   3. Manufactured Shop Drawings

1.2 SYSTEM DESCRIPTION

A. Definition: The entrance ramp will provide ADA access to the house. It slopes at 8.33% from the courtyard of the house to the ground. It is primarily made of steel undercarriage with a black locust decking. The system comes in four sections for easy assembly on site and can be erected within two hours.

B. Performance Requirements: Ramp Sections shall be designed for a minimum uniform live load of 100 pounds per square foot and concentrated vertical load of 300 pounds distributed uniformly over and area of 1 square foot.
   1. Professional Engineer Qualifications: A professional engineer who is legally qualified to practice in jurisdiction where Project is located and who is experienced in providing engineering services of the kind indicated. Engineering services are defined as those performed for installations of handrails and railings that are similar to those indicated for this Project in material, design, and extent.
   2. Welding Standards: Comply with applicable provisions of AWS D1.7 Structural Welding Code-Steel.
   3. Source Limitations: Obtain each type of handrail and railing through one source from a single manufacturer.

PART 2 - PRODUCTS

2.1 MANUFACTURER

A. Accufab Inc., 232 Cherry St. Ithaca, NY 14850; telephone (607) 273-3706; Fax (607) 277-8295; email: office@accufabinc.com; website: http://www.accufabinc.com/home.htm

2.2 MATERIALS

A. 1/8” Thick Steel C-Channel that are used to run the distance of the ramp.
   1. ASTM A 36

B. 1/8” Thick Angle Iron to be bolted to the C-Channel to support the black locust decking.
   1. ASTM A 36

C. 2” Square Steel tube to run between the C-channels
   1. ASTM A 500 Grade B

D. Structural Carriage Bolts 2” in length used to hold the four ramp sections together
   1. A 325-ST Bolts

E. ACCESSORIES
   1. #14 x 1/2” In wood screw flat head
   2. Store SKU# 726880
   3. http://www.homedepot.com/webapp/wcs/stores/servlet/ProductDisplay?storeId=10051&langId=-1&catalogId=10053&productId=100128524

2.3 QUALITY ASSURANCE

A. Steel welding shall be in accordance with the ANSI/AWS D1.2-97 gas metal arc welding process and shall be performed by experienced operators.

PART 3 - EXECUTION

3.1 DELIVERY, STORAGE & HANDLING

A. Ramp shall be ordered from steel manufacture who will weld the steel sections and cross braces into place and provide customer with four sections of ramp that adhere to shop drawings. The Black locust shall be ordered from the lumberyard around the same time.

B. The completed ramp sections should be stored inside to help prevent rusting.

3.2 INSTALLATION

A. The four steel sections should assembled on site and connected to the house via the ramp connection mounted on the courtyard. Each section receives two carriage bolts to secure sections together.

B. The black locust will be assembled to the angle iron before it is dropped into the ramp. The angle iron will have pre-drilled holes spaced every two inches on center to allow for the wood screws to attach to the locust.

C. These pallets can then be dropped into the sections of the ramp and bolted through the C-channel with two carriage bolts per pallet.

END OF SECTION 05 60 00

SECTION 05 60 02 - NFT METAL TROUGHS

PART 1 - GENERAL

1.1 SUMMARY

A. Submittals:
   1. Shop Drawings: Show fabrication and installation of handrails and railings. Include plans, elevations, sections, component details, and attachments to other Work.
   2. Qualification Data: For firms and persons specified in “Quality Assurance” Article to demonstrate their capabilities and experience. Include lists of completed projects with project names and addresses, names and addresses of architects and owners, and other information specified.
   3. Welder Certificates: Signed by Contractor certifying that welders comply with requirements specified under the “Quality Assurance” article

B. Related Sections

   1. Manufactures Shop Drawings.

1.2 SYSTEM DESCRIPTION

A. Definition: The fabricated troughs will be water tight and hold the plants for the system. They will be made out of 1/16 inch thick steel which will be able to hold the water rockwool and plants.

B. Performance Requirements: Ramp Sections shall be designed for a minimum uniform live load of 100 pounds per square foot and concentrated vertical load of 300 pounds distributed uniformly over and area of 1 square foot.
   1. Professional Engineer Qualifications: A professional engineer who is legally qualified to practice in jurisdiction where Project is located and who is experienced in providing engineering services of the kind indicated. Engineering services are defined as those performed for installations of handrails and railings that are similar to those indicated for this Project in material, design, and extent.
   2. Welding Standards: Comply with applicable provisions of AWS D1.7 Structural Welding Code-Steel.
   3. Source Limitations: Obtain each type of handrail and railing through one source from a single manufacturer.

PART 2 - PRODUCTS

2.1 MANUFACTURER

A. Accufab Inc., 232 Cherry St. Ithaca, NY 14850; telephone (607) 273-3706; Fax (607) 277-8295; email: office@accufabinc.com; website: http://www.accufabinc.com/home.htm

2.2 MATERIALS

A. 1/16” Thick Steel Sheets.
   1. ASTM A 36

B. 1” Inside diameter threaded metal pipe.
   1. ASTM A 53

2.3 QUALITY ASSURANCE

A. Steel welding shall be in accordance with the ANSI/AWS D1.2-97 gas metal arc welding process and shall be performed by experienced operators.

PART 3 - EXECUTION

3.1 DELIVERY, STORAGE & HANDLING

A. Troughs shall be ordered from steel manufacture who will weld the steel sections and cross braces into place and provide customer with four sections of ramp that adhere to shop drawings. The Black locust shall be ordered from the lumberyard around the same time.

B. The completed ramp sections should be stored inside to help prevent rusting.

END OF SECTION 05 60 02

SECTION 06 11 00 – WOOD FRAMING

PART 1 - GENERAL

1.1 SUMMARY

A. Submittals: ICC-ES evaluation reports for wood-preservative treated wood, drawings

1.2 SYSTEM DESCRIPTION

A. Design requirements: wood framing in wall assembly as specified in drawings

PART 2 - PRODUCTS

2.1 MANUFACTURER

A. Acceptable manufacturer or equivalent: Home Depot, 398 Elmira Rd., Ithaca NY 14850; tel: (607) 272-1093

2.2 WOOD PRODUCTS, TYPICAL

A. 2x_ Stock Lumber: S4S, marked with grade stamp of inspection agency.

B. Sleepers

C. Plywood, ½” + ¾”

D. Parapt and Spacer

PART 3 - EXECUTION

3.1 INSPECTION

A. Lumber should be inspected for uniformity of appearance, quality and moisture content

3.2 INSTALLATION

A. Set rough carpentry to required levels and lines, with members plumb, true to line, cut, and fitted. Locate nailers, blocking, and similar supports to comply with requirements for attaching other construction.

END OF SECTION 06 11 00

SECTION 06 11 02 - WOOD FRAMING SCAFFOLDING PROP

GENERAL

1.1 SUMMARY

A. Submittals: Construction documents, product data

B. Related Sections

1. Section 06 16 53. C

1.2 SYSTEM DESCRIPTION

A. The 2” x 4” wood prop will be used to support the plywood base of the landscape close to the house where the scaffolding will not fit.

B. Performance Requirements:
1. Testing Agency Qualifications: An independent testing agency, acceptable to authorities having jurisdiction, with the experience and capability to conduct the testing indicated, as documented according to ASTM E 548.
2. Source Limitations for Engineered Wood Products: Obtain each type of engineered wood product through one source from a single manufacturer.
3. Forest Certification: For the following wood products, provide materials produced from wood obtained from forests certified by an FSC-accredited certification body to comply with FSC 1.2, "Principles and Criteria":

PART 2 - PRODUCTS

2.1 MANUFACTURER

A. Acceptable source or equivalent: The Home Depot Corporation, 410 Elmira Road Bldg 1 Ithaca, NY 14850; telephone (607) 272-1094; website: www.homedepot.com

2.2 MATERIALS

A. 2”x4” conventional pressure treated lumber shaved to proved slope for the NFT system.
1. Store SKU# 254985
2. http://www.homedepot.com/webapp/wcs/stores/servlet/ProductDisplay?storeId=10051&langId=-1&catalogId=10053&productId=100056883LINK

B. ACCESSORIES
1. #14 x 3 In wood screw flat head
2. Store SKU# 726880
3. http://www.homedepot.com/webapp/wcs/stores/servlet/ProductDisplay?storeId=10051&langId=-1&catalogId=10053&productId=100128524

2.3 QUALITY ASSURANCE

A. Installer Qualifications: Installer should be experienced in performing work of this section and should have specialized in installation of work similar to that required for this project.

2.4 REGULATORY REQUIREMENTS

A. The lumber shall be recognized for compliance with International Building Code in a current ICC ES evaluation report

PART 3 - EXECUTION

3.1 DELIVERY, STORAGE & HANDLING

A. Lumber shall be ordered with enough lead time to be able to assemble props before the instillation of the landscape.

B. Material should be stored out of the elements to prevent warping and other wear and tear from weather.

3.2 INSTALLATION

A. Refer to construction documents for dimensions of wood pieces.

B. The props will be assembled before the instillation of the landscape and be screwed the to plywood on site to provide support.

END OF SECTION 06 11 02

SECTION 06 11 03 - WOOD FRAMING FOR NFT TROUGHS

GENERAL

1.1 SUMMARY

A. Submittals: Construction documents and product data.

B. Related Sections

1. Section 06 16 53 C Exterior Sheathing

1.2 SYSTEM DESCRIPTION

A. The frames for the NFT will hold three troughs together and allow for easy leveling and sloping of the system. They will also assist in transport and assembly to of the system.

B. Performance Requirements:
1. Testing Agency Qualifications: An independent testing agency, acceptable to authorities having jurisdiction, with the experience and capability to conduct the testing indicated, as documented according to ASTM E 548.
2. Source Limitations for Engineered Wood Products: Obtain each type of engineered wood product through one source from a single manufacturer.
3. Forest Certification: For the following wood products, provide materials produced from wood obtained from forests certified by an FSC-accredited certification body to comply with FSC 1.2, "Principles and Criteria":

PART 2 - PRODUCTS

2.1 MANUFACTURER

A. Acceptable source or equivalent: The Home Depot Corporation, 410 Elmira Road Bldg 1 Ithaca, NY 14850; telephone (607) 272-1094; website: www.homedepot.com

2.2 MATERIALS

A. 2”x4” conventional pressure treated lumber shaved to proved slope for the NFT system.
1. Store SKU# 254985
2. http://www.homedepot.com/webapp/wcs/stores/servlet/ProductDisplay?storeId=10051&langId=-1&catalogId=10053&productId=100056883LINK

B. Millstead 2 In. x 2 In. x 8 Ft. Pressure Treated Lumber
1. #020208ASQ
2. http://www.homedepot.com/webapp/wcs/stores/servlet/ProductDisplay?storeId=10051&langId=-1&catalogId=10053&productId=100002486&N=10000003+90093+500153+4294926606

C. ACCESSORIES

1. #14 x 3 In wood screw flat head
2. Store SKU# 726880
3. http://www.homedepot.com/webapp/wcs/stores/servlet/ProductDisplay?storeId=10051&langId=-1&catalogId=10053&productId=100128524

2.3 QUALITY ASSURANCE

A. Installer Qualifications: Installer should be experienced in performing work of this section and should have specialized in installation of work similar to that required for this project.

2.4 REGULATORY REQUIREMENTS

A. The lumber shall be recognized for compliance with International Building Code in a current ICC ES evaluation report

PART 3 - EXECUTION

3.1 DELIVERY, STORAGE & HANDLING

A. Lumber shall be ordered with enough lead time to have on site when testing of the NFT system begins.

B. Material should be stored out of the elements to prevent warping and other wear and tear from weather.

3.2 INSTALLATION

A. Refer to construction documents for dimensions of wood pieces.

B. The plywood will serve as the base piece and should be cut down to the specified size.

C. The 2” x 2” lumber should be fastened to the plywood with wood screws every 1’ OC.

D. The troughs should not be able to move once placed in between the 2” x 2”.

END OF SECTION 06 11 03

06 12 00 STRUCTURALLY INSULATED PANELS

PART 1 - GENERAL

1.1 SUMMARY

A. Submittals: Evidence of compliance with code requirements, construction drawings

B. ICC Evaluation Services Report # 97-36

1.2 SYSTEM DESCRIPTION

A. Definition: Murus Polyurethane Structural Insulating Panels (SIPs) are engineered products consisting of approved oriented strand board (OSB) and third party certified rigid polyurethane foam insulation core and are used in the ceiling and floor assemblies for structural and thermal purposes.

PART 2 - PRODUCTS

2.1 MANUFACTURER

A. The Murus Company, Inc., PO Box 220, 3234 Route 549, Mansfield, PA 16933; tel: (570) 549-2100; fax: (570) 549-2101.

2.2 MATERIALS

A. Description: Ceiling - 5 ½" with R-value 33; Polyurethane closed cell foam – minimum of 2.2 pcf insulation; OSB – an APA performance rating mark shall be identified on the panel, with an Exposure 1 durability rating; minimum physical properties shall be tested and described in APA PRP-108. 7/16" thickness is standard

B. Description: Floor – 4 ½" with R-value 26; same composition as 5 ½" SIP
   1. Model: Murus OSB-2100PUR
   2. http://www.murus.com/homeowners/t.spec.OSB2100.html

C. ACCESSORIES
   1. Foam Sealant - DOW Great Stuff Pro Series
      http://building.dow.com/global/greatstuffpro.htm
   2. Fasteners – Simpson STL2 Straps
   3. Fasteners – A307 Carriage Bolts, Nails + Screws
   4. Dimensional Lumber – 2x_ Stock Splines

2.3 QUALITY ASSURANCE

A. Provide evidence of third party inspection and labeling of all insulation used in the manufacture of panels. Manufacturer's listing programs shall cover both flame and physical properties.

B. Panel manufacturer will provide lamination and R-value warranty documents for building owner acceptance and execution upon request. Manufacturer's standard forms will be submitted.

PART 3 - EXECUTION

3.1 DELIVERY, STORAGE & HANDLING

A. All panels shall be stored in manufacturer's original packaging in a protected area and elevated to prevent ground contact.

B. Prior to installation, panels shall be covered and protected from exposure to sunlight and moisture.

C. After installation, panels shall be covered to prevent contact with water and /or moisture on all exposed panel edges and faces.

3.2 INSTALLATION

A. The contractor shall inspect conditions of substrate, grade and other conditions, which may affect the proper installation of panels. *Any* adverse conditions are to be reported in writing to the construction manager. Do not proceed with the installation until adverse conditions are corrected.

B. Installation shall be in strict accordance with manufacturer's published instructions, details, and the drawings that are part of the contract documents for this project. Any conflicts between these documents shall be resolved in writing. All plans shall be reviewed by a registered professional engineer and shall be signed and sealed. Deviations from standard detail and load design values shall be calculated and signed and sealed by a registered professional engineer.

END OF SECTION 06 12 00

SECTION 06 15 00 – WOOD DECKING

PART 1 - GENERAL

1.1 SUMMARY

A. Submittal: Product Data, Construction Drawings

1.2 SYSTEM DESCRIPTION

A. Black Locust Timber shall be purchased from a local grower and harvested directly from his Black Locust crop. Wood shall be rough milled and bought in various sizes and shapes per application on deck, ramp and mechanical closet cladding

PART 2 - PRODUCTS

2.1 SUPPLIER

A. Tom Brown/Robert Collins Sawmill 1100 Conkrite Rd., Cayuta, NY 14824; tel: (607) 594-3490

B. MATERIALS
   1. Species: Black Locust

C. ACCESSORIES
   1. Standard Deck screws; ¼” and 3/8” galvanized

D. FINISH
   1. Once installed locust shall be sanded and left to take on its natural color.

2.2 QUALITY ASSURANCE

A. Manufacturing Standard: Conform to ANSI/AITC A190.1.

PART 3 - EXECUTION

3.1 DELIVERY, STORAGE & HANDLING

A. Locust should be stored inside until it is installed in the courtyard or ramp. Once installed it should be taken outside to allow for its natural green/reddish color to start to form

3.2 INSTALLATION

A. The Locust should be planed down to 2” thickness.

B. It should then be cut into 5” sections making sure to cut around the knots in the wood.

C. Secure locust to ramp and courtyard using wood screws.

END OF SECTION 06 15 00

SECTION 06 16 00 - SHEATHING

PART 1 - GENERAL

1.1 SUMMARY

A. Submittals: ICC-ES evaluation reports for preservative-treated plywood, shop drawings

B. Related Sections:

1. 05 12 13 Structural Steel Framing
2. 06 12 00 Structurally Insulated Panels
3. 07 56 00 Fluid-Applied Roofing

1.2 SYSTEM DESCRIPTION

A. ½” Plywood sheathing shall be applied on walls of mechanical closet to provide unfinished surface.

PART 2 - PRODUCTS

2.1 MANUFACTURER

A. Little Falls Lumber, 73 Southern Avenue, Little Falls, NY 13365; tel: (315) 823-2470; fax: (315) 823-3521

2.2 MATERIALS

A. ½” plywood

PART 3 - EXECUTION

3.1 INSTALLATION

A. Fastening Methods: screw to wood framing

END OF SECTION 06 16 00

SECTION 06 16 23 - SUBFLOORING

PART 1 - GENERAL

1.1 SUMMARY

A. Submittals: ICC-ES evaluation reports for preservative-treated plywood, shop drawings

B. Related Sections:

1. 05 12 13 Structural Steel Framing
2. 06 12 00 Structurally Insulated Panels
3. 07 56 00 Fluid-Applied Roofing

1.2 SYSTEM DESCRIPTION

A. Plywood subflooring will provide unfinished surface in floor assemblies

PART 2 - PRODUCTS

2.1 MANUFACTURER

A. Little Falls Lumber, 73 Southern Avenue, Little Falls, NY 13365; tel: (315) 823-2470; fax: (315) 823-3521

2.2 MATERIALS

A. Tongue and groove (t/g) ¾” plywood

PART 3 - EXECUTION

3.1 INSTALLATION

A. Fastening Methods: screw to wood framing sleepers

END OF SECTION 06 16 23

SECTION 06 16 53 -- EXTERIOR SHEATHING

PART 1 - GENERAL

1.1 SUMMARY

A. Related Sections

1. Section 06 11 00 Wood Framing

1.2 SYSTEM DESCRIPTION

A. Plywood decking to be used through the landscape to provide footers for the scaffolding jacks, cover the scaffolding planks, and frame the Nutrient Film Technique troughs.

B. Performance Requirements:
1. Testing Agency Qualifications: An independent testing agency, acceptable to authorities having jurisdiction, with the experience and capability to conduct the testing indicated, as documented according to ASTM E 548.
2. Source Limitations for Engineered Wood Products: Obtain each type of engineered wood product through one source from a single manufacturer.
3. Forest Certification: For the following wood products, provide materials produced from wood obtained from forests certified by an FSC-accredited certification body to comply with FSC 1.2, "Principles and Criteria"

PART 2 - PRODUCTS

2.1 MANUFACTURER

A. Acceptable source or equivalent**:** Lowe's Of Ithaca, NY # 1864 130 Fairgrounds Menorial Pkwy, Ithaca , NY 14850; tel: (607) 254-2000

2.2 MATERIALS

A. ½" x 4' x 8' OSB plywood.
1. Item #: 12213
2. http://www.lowes.com/lowes/lkn?action=productDetail&productId=12213-44903-LBR-12213&lpage=none

B. ½" x 2' x 8' OSB plywood.
1. Item #: 12213
2. http://www.lowes.com/lowes/lkn?action=productDetail&productId=12213-44903-LBR-12213&lpage=none

C. ½" x 4' x 4' OSB plywood.
1. Item #: 12213

2. http://www.lowes.com/lowes/lkn?action=productDetail&productId=12213-44903-LBR-12213&lpage=none

D. ½"OSB plywood cut to specified radius and dimensions.
1. Item #: 12213
2. http://www.lowes.com/lowes/lkn?action=productDetail&productId=12213-44903-LBR-12213&lpage=none

E. ½" x 1' x 1' OSB plywood.
1. Item #: 12213
2. WEB SITE: http://www.lowes.com/lowes/lkn?action=productDetail&productId=12213-44903-LBR-12213&lpage=none

F. ACCESSORIES
1. Description: #14 x 3 In wood screw flat head
2. Store SKU# 726880

2.3 QUALITY ASSURANCE

A. Installer Qualifications: Installer should be experienced in performing work of this section and should have specialized in installation of work similar to that required for this project.

2.4 REGULATORY REQUIREMENTS

A. Lumber shall be recognized for compliance with [International Building Code, International Residential Code, or in a current ICC ES evaluation report

PART 3 - EXECUTION

3.1 DELIVERY, STORAGE & HANDLING

A. Comply with lumber manufacturer's ordering instructions and lead time requirements to avoid construction delays.

B. Deliver materials from lumber supplier with identification labels or markings intact.

3.2 INSTALLATION

A. Lumber shall be installed as to drawing specifications.

B. Lumber should be cut to appropriate sizes and installed as specifications and drawings require.

END OF SECTION 06 16 53

SECTION 06 30 00 – FINISH CARPENTRY LANDSCAPE SKIRTING

PART 1 - GENERAL

1.1 SUMMARY

A. Related Sections

1. Section 06 11 00 Wood Framing
2. Section 06 15 00 Wood Decking
3. Section 06 16 53 Sheathing Board

1.2 SYSTEM DESCRIPTION

A. Definition: This wood skirting is used to hide the potted plants around the perimeter of the landscape from the public. The black locust matches the ramp and the courtyard flooring.

B. Performance Requirements:

1. Testing Agency Qualifications: An independent testing agency, acceptable to authorities having jurisdiction, with the experience and capability to conduct the testing indicated, as documented according to ASTM E 548.
2. Source Limitations for Engineered Wood Products: Obtain each type of engineered wood product through one source from a single manufacturer.
3. Forest Certification: For the following wood products, provide materials produced from wood obtained from forests certified by an FSC-accredited certification body to comply with FSC 1.2, "Principles and Criteria":

PART 2 - PRODUCTS

2.1 MANUFACTURER

A. Acceptable source or equivalent**:** The Home Depot Corporation, 410 Elmira Road Bldg 1 Ithaca, NY 14850; telephone (607) 272-1094; website: www.homedepot.com

2.2 MATERIALS

A. 2”x4” conventional pressure treated lumber which will be used to provide support for the black locust planks. Purchased from certified source.

1. PART NUMBER :Store SKU# 254985
2. http://www.homedepot.com/webapp/wcs/stores/servlet/ProductDisplay?storeId=10051&langId=-1&catalogId=10053&productId=100056883LINK

B. ½” x 4’ x 8’ OSB plywood.

1. Item #: 12213
2. http://www.lowes.com/lowes/lkn?action=productDetail&productId=12213-44903-LBR-12213&lpage=none

C. ACCESSORIES
   1. #14 x 3 In wood screw flat head
   2. SKU# 726880
   3. http://www.homedepot.com/webapp/wcs/stores/servlet/ProductDisplay?storeId=10051&langId=-1&catalogId=10053&productId=100128524

2.3 QUALITY ASSURANCE

A. Installer Qualifications: Installer should be experienced in performing work of this section and should have specialized in installation of work similar to that required for this project.

2.4 REGULATORY REQUIREMENTS

A. Lumber shall be recognized for compliance with [International Building Code, International Residential Code, or in a current ICC ES evaluation report

PART 3 - EXECUTION

3.1 DELIVERY, STORAGE & HANDLING

A. Ordering: Comply with lumber manufacturer's ordering instructions and lead time requirements to avoid construction delays.

B. Delivery: Deliver materials from lumber supplier with identification labels or markings intact.

3.2 INSTALLATION

A. As to the construction drawings the lumber should be framed as specified in the drawing set.

B. Once the frame is erected the black locust boards (Section 06 15 00) should be attached to the frame using wood screws. The ends of the locust should be staggered.

C. The frame will then be attached to a 2'x8' piece of plywood to give it stability while on the ground.

END OF SECTION 06 30 00

SECTION 06 40 23 – INTERIOR ARCHITECTURAL WOODWORK

PART 1 - GENERAL

1.1 SUMMARY

A. Submittals: Shop drawings

1.2 SYSTEM DESCRIPTION

A. Custom-fabricated interior wall shelving in Bedroom, Kitchen, and Living modules shall be made with beech wood. Shelving components are mounted to vertical wall studs, and follow the curvature of interior walls.

PART 2 - PRODUCTS

2.1 MANUFACTURER

A. Cornell University, Project Design and Construction, Humphreys Service Building, Ithaca, New York 14853; tel: (607) 254-2996; fax: (607) 255-8071

B. MATERIALS
   1. Beech lumber
   2. 6 types of shelves, as drawn in I-512. Type A is typical, Types B-F accommodate other interior elements.
      a. Type A-27 shelves, Type B-2 shelves, Type C-2 shelves, Type D-1 shelf, Type E-1 shelf, Type F-1 shelf. Sizes vary based on radius and length.
   3. http://www.fitzweller.com/components/cnc_routing, for CNC Mill

C. ACCESSORIES
   1. Description: Accessories for installation are 8” long, 3/8” diameter steel rods; 2x4 dimensional lumber blocking, and 2 bolts, 4 nuts for each shelf.
   2. Typical hardware, http://www.boltdepot.com/lag-bolts.aspx, or similar

PART 3 - EXECUTION

3.1 INSTALLATION

A. Blocking will be inserted into the studs at correct heights throughout each room. Shelves will be CNC milled. Blocking and shelves will be drilled to accommodate steel rods. These will be drilled parallel to each other. Bolts and nuts will be used as a screw in fastener.

END OF SECTION 06 40 23

SECTION 06 41 00 ARCHITECTURAL WOOD CASEWORK

PART 1 - GENERAL

1.1 SUMMARY

A. Submittals: Shop drawings

1.2 SYSTEM DESCRIPTION

A. The bathroom cabinet shall be custom-designed and –fabricated from Black Locust wood and shall contain plumbing equipment and personal storage.

PART 2 - PRODUCTS

2.1 MANUFACTURER

A. Cornell University, Project Design and Construction, Humphreys Service Building, Ithaca, New York 14853; tel: (607) 254-2996; fax: (607) 255-8071

B. C.R. Laurence Co., Inc., 2503 E. Vernon Ave., Los Angeles, California 90058; tel: (800) 421-6144; fax: (800) 262-3299

2.2 MATERIALS

A. Black Locust Wood
   1. Material locally sourced.

B. Hardware
   1. Back-to-back Easy Grip
   2. HWR-177 and all necessary accessories. Typical cleat hardware.
   3. http://www.govart.com/hardware_cleat_C.html, or similar.

PART 3 - EXECUTION

3.1 INSTALLATION

A. Cabinet will be fabricated by PDC. Installation into wall typical. Bolt through 3/4” beech and 2x4 blocking.

END OF SECTION 06 41 00

SECTION 06 72 00 - COMPOSITE STRUCTURAL ASSEMBLIES

PART 1 - GENERAL

1.1 SUMMARY

A. Submittals: Manufacturer's product data, drawings and material samples

B. Related Sections
   1. Section 05 12 13 Structural Steel Framing

1.2 SYSTEM DESCRIPTION

A. Farrat thermal break connection plates are high performance, medium strength thermal insulators used between flanged connections of internal and external steelwork and concrete to prevent thermal / cold bridging.

B. Performance Requirements: Thermal Conductivity - .29 W/m*K

PART 2 - PRODUCTS

2.1 MANUFACTURER

A. Farrat Isolevel Ltd., Balmoral Road, Altrincham, Cheshire, England WA15 8HJ; tel: +44(0) 161-924-1600; fax: +44(0) 161-924-1616

B. MATERIALS
   1. Thermal Break Connection Plates: 1in nylon-based material which will withstand medium loadings (up to 96N/mm2 (MPa)) with compression by approximately 10% at its ultimate compressive loaad.
   2. TBN100 (formerly TBN260)
   3. http://www.farrat.com/thermal_break_connections_tbn100.html

C. ACCESSORIES
   1. ASTM 325 Bolts

PART 3 - EXECUTION

3.1 INSTALLATION

A. Fabricate and assemble in shop with strict compliance to manufacturer's installation instructions and shop drawings.

END OF SECTION 06 72 00

SECTION 07 21 13.13 – FOAM BOARD INSULATION

PART 1 - GENERAL

1.1 SUMMARY

A. Submittals: Product data, construction drawings

B. Related sections: 09 29 00 Gypsum Board

1.2 SYSTEM DESCRIPTION

A. TUFF-R Insulation board shall be installed in ceiling assembly, around W 8x 13 beams, and over bold heads. Board insulation shall be finished with ¼” gypsum.

PART 2 - PRODUCTS

2.1 MANUFACTURER

A. The Dow Chemical Company, Building & Construction, 200 Larkin, Midland, MI 48674; tel: (866) 583-BLUE

2.2 MATERIALS

A. ½” - TUFF-R polyisocyanurate insulation consists of three-ply Tri-Plex laminate facers consisting of polyester, virgin kraft, and reinforced aluminum foil

B. 1-½” - TUFF-R
   1. Fasteners: screws and adhesive
   2. http://www.fabricationspecialties.com/pdf/tuff-r.pdf

2.3 REGULATORY REQUIREMENTS

A. Products shall comply with the following codes and standards: IRC and IBC; ASTM C1289 Type I, Class 1; Calif. Std. Reg. # CA-T383

PART 3 - EXECUTION

3.1 INSTALLATION

A. Installation should adhere to manufacturers guidelines.

END OF SECTION 07 21 13.13

SECTION 07 21 29 – SPRAYED-FOAM INSULATION

PART 1 - GENERAL

1.1 SECTION REQUIREMENTS

A. Submittals: Product data, construction drawings

1.2 SYSTEM DESCRIPTION

A. Closed-cell spray foam insulation for residential shall be used to thermally insulate wall assemblies and add structural rigidity. The Insulation Man will provide installation services using Demilic and Honeywell products.

PART 2 - PRODUCTS

2.1 MANUFACTURER

A. Demilec, 870 Cure Boivin, Boisbriand, Quebec, Canada J7G 2A7; tel: (450) 437-0123; fax: (450) 437-2338; email: demilec@demilec.com

B. MATERIALS
1. Heatlok Soya is a spray polyurethane foam made from recycled plastics and renewable vegetable oils.
2. Heatlok Soya
3. http://www.heatlok-soya.com/properties.php

2.2 ACCESSORIES

A. Honeywell International Inc., 101 Columbia Road, Morristown, NJ 07962; tel: (973) 455-2000; fax: (973) 455-4807

B. MATERIALS
1. Enovate Blowing Agent is a liquid hydrofluorocarbon agent for rigid insulating foams
2. Enovate Blowing Agent
3. http://www51.honeywell.com/sm/chemicals/enovate/products-and-applications-sub/technical-data.html

2.3 INSTALLATION SERVICES

A. The Insulation Man, Dundon Insulation, Inc., 203 Treadwell Road, Windsor, NY 13865; tel: (607) 775-3035; fax: (607) 775-3045; email: warminup@insulationman.com

B. http://www.insulationman.com/services/insulation.htm

PART 3 - EXECUTION

3.1 INSTALLATION

A. Install insulation in areas and in thicknesses indicated by construction drawings.

B. Place loose-fill insulation to comply with ASTM C 1015.

1. Comply with the CIMA's Special Report #3, "Standard Practice for Installing Cellulose Insulation."

END OF SECTION 07 21 29

SECTION 07 22 16 – ROOF INSULATION

PART 1 - GENERAL

1.1 SUMMARY

A. Submittals: Product data, construction drawings

B. Related Sections

1. Section 07 56 00 Fluid-Applied Roofing

1.2 SYSTEM DESCRIPTION

A. Carlisle tapered roof insulation is designed to minimize heating and cooling costs while promoting positive rooftop drainage. By directing water to drains and scuppers, tapered polyiso reduces water infiltration and minimizes the negative effects of ponding water, ultimately lengthening the service life of a roof.

B. Regulatory Requirements: UL 790 Class A; FM Class 1 (FM 4450); ASTM C01289-06, Type II, Class 1, Grade 2; IBC Section 2603

PART 2 - PRODUCTS

2.1 MANUFACTURER

A. Carlisle SynTec Incorporated, P.O. Box 7000, Carlisle, PA 17013; tel: (717) 245-7000; fax: : (717) 245-7143; email: market@syntec.carlisle.com

B. MATERIALS
1. Carlisle HPH is a sloped rigid roof insulation panel composed of a closed cell polyisocyanurate foam core bonded on each side to fiber reinforced facers
2. http://www.carlisle-syntec.com/documents/ResLib/603256-HP-H-TaperedPolyiso.pdf

2.2 QUALITY ASSURANCE

A. All products shall be inspected for damage prior to installation.

PART 3 - EXECUTION

3.1 DELIVERY, STORAGE & HANDLING

A. Insulation must be protected from open flame and kept dry at all times.

3.2 INSTALLATION

A. Installation shall strictly follow manufacturer's instructions.

B. Install only as much insulation as can be covered the same day by completed roof covering material.

END OF SECTION 07 22 16

SECTION 07 25 00 – WEATHER BARRIERS

PART 1 - GENERAL

1.1 SUMMARY

A. Submittals: Product data, manufacturer instructions

1.2 SYSTEM DESCRIPTION

A. DuPont Tyvek Homewrap is a spunbonded polyolefin, non-woven, non-perforated weather barrier.

B. Performance Characteristics
1. Air Penetration: <.004 cfm/ft^2 at 1.57 psf, when tested in accordance with ASTM E2178. Type I per ASTM E1677
2. Water Vapor Transmission: 56 perms, when tested in accordance with ASTM E96-05, Method A
3. Water Penetration Resistance: 250 cm when tested in accordance with AATCC Test Method 127
4. Basis Weight: 1.8 oz/yd^2, when tested in accordance with TAPPI Test Method T-410
5. Air Resistance: 1200 seconds, when tested in accordance with TAPPI Test Method T-460
6. Tensile Strength: 30/30 lbs/in., when tested in accordance with ASTM D882
7. Tear Resistance: 8/6 lbs, when tested in accordance with ASTM D1117
8. Surface Burning Characteristics: Class A, when tested in accordance with ASTM E84. Flame Spread: 15, Smoke Developed: 15

PART 2 - PRODUCTS

2.1 MANUFACTURER

A. DuPont Building Innovations; 4417 Lancaster Pike, Chestnut Run Plaza 721, Wilmington, DE 19805; 1-800-44-TYVEK (8-9835)

B. MATERIALS
1. DuPont™ Tyvek® HomeWrap®
2. http://www2.dupont.com/Tyvek_Weatherization/en_US/products/residential/resi_homewrap.html

C. ACCESSORIES
1. Seam Tape: 2 inch wide, DuPont™ Tyvek® Tape as manufactured by DuPont Building Innovations.
2. DuPont™ Tyvek® Wrap Cap Screws for steel frame construction, as manufactured by DuPont Building Innovations: 1-5/8 inch rust resistant screw with 2-inch diameter plastic cap or manufacturer approved 1-1/4” or 2” metal gasketed washer.

2.2 QUALITY ASSURANCE

A. Installer shall have experience with installation of similar weather barrier assemblies under similar conditions.

B. Installation shall be in accordance with manufacturer's installation guidelines and recommendations.

C. Provide weather barrier and accessory materials produced by single manufacturer.

PART 3 - EXECUTION

3.1 INSTALLATION

A. Install weather barrier over exterior face of exterior wall substrate in accordance with manufacturer recommendations.

B. Start weather barrier installation at a building corner, leaving 6-12 inches of weather barrier extended beyond corner to overlap.

C. Install weather barrier in a horizontal manner starting at the lower portion of the wall surface. Maintain weather barrier plumb and level.

D. Extend bottom roll edge over sill plate interface 2" to 3" minimum. Seal weather barrier with sealant or tape. Shingle weather barrier over back edge of thru-wall flashings and seal weather barrier with sealant or tape. Ensure weeps are not blocked.

E. Subsequent layers shall overlap lower layers a minimum of 6 inches horizontally in a shingling manner.

F. Window and Door Openings: Extend weather barrier completely over openings.

END OF SECTION 07 25 00

SECTION 07 46 19 STEEL SIDING

PART 1 - GENERAL

1.1 SUMMARY

A. Submittals: Product data, Construction drawings

B. Related Sections

1. Section 05 12 13 Structural Steel Framing

1.2 SYSTEM DESCRIPTION

A. Corten corrugated steel siding shall be attached as exterior cladding and shall be let to oxidize to a rusted finish.

B. Performance Requirements: Maximum allowable stress for Grade A (F) = 20,000 PSI for roofs and 26,667 PSI for walls where wind is only load

PART 2 - PRODUCTS

2.1 MANUFACTURER

A. Corrugated Metals, Inc., 3575 Morreim Drive, Belvidere, Illinois 61008; tel: (815) 323-1310; fax: (815) 323-1317; email: info@corrugated-metals.com

2.2 MATERIALS

A. Corten corrugated steel siding, 18 ga ASTM A606 sheets with 93.25” radius

B. 18 ga ASTM A606 flat sheets
1. 2.67” x 7/8”
2. http://www.corrugated-metals.com/267x78_corrugated.html

C. ACCESSORIES
1. Attachment fasteners: 2 ½” stainless steel self-tapping screws and neoprene washers

2.3 QUALITY ASSURANCE

A. Ensure that rolled sections are of correct radius curvature.

PART 3 - EXECUTION

3.1 INSTALLATION

A. Installations of corrugated steel should strictly follow drawings for overlap of rolled sections and extension above roof height.

END OF SECTION 07 46 19

SECTION 07 56 00 – FLUID-APPLIED ROOFING

PART 1 - GENERAL

1.1 SUMMARY

A. Submittals: Product data, material safety data sheets, drawings

1.2 SYSTEM DESCRIPTION

A. Acrylab acrylic base and finish coats shall provide waterproofing protection on the roof assembly.

PART 2 - PRODUCTS

2.1 MANUFACTURER

A. Acrylabs, 730 Commercial Lane, Honeybrooke, PA 19344; telephone: (610)273-1355; fax: (610) 273-1357; website: www.acrylabs.com

B. MATERIALS
1. Elastomeric coatings shall be water-dispersed 100% elastomeric coatings designed for use in reinforced composite membrane system. Adhesive to asphalt, metal, modified bitumen, concrete, wood, EPDM, PUF, and most single ply membrane systems.
2. 2100Bb Acrylic Base Coat
3. http://acrylabs.com/2100B_Acrylic_Elastomeric_Base_Coat.shtml
4. 2100HT Acrylic Finish Coat in white
5. http://acrylabs.com/2100_Acrylic_Elastomeric_Finish_Coat.shtml

C. APPLICATION EQUIPMENT
1. Acrylabs, Inc. coatings shall be applied by brush, roller, or spray. When applied by spray it is recommended that airless spray be used. Application by roller or brush may require additional coats, but material requirements will remain the same. In all cases, the specified minimum membrane thickness must be achieved.

2.2 QUALITY ASSURANCE

A. Examine the substrates, flashing conditions, penetrations, equipment supports, curbs, adjoining construction and the conditions under which the work is to be installed. Do not proceed with the work until unsatisfactory conditions have been corrected and substrate is acceptable.

B. Verify that substrate is dry and free of oil, grease, dust, rust, or other contaminant.

PART 3 - EXECUTION

3.1 SAFETY REQUIREMENTS

A. Users should familiarize themselves with appropriate Material Safety Data Sheets (MSDS). MSDS must be available at all worksites where materials are being used.

B. Materials shall be applied in accordance with all applicable local, state, and federal regulations.

C. A respirator should be used when spraying Acrylabs, Inc. coatings to protect applicators from overspray particles.

D. Handle on pails should only be used to hand carry pail and should not be used to hoist pail from ground to roof.

3.2 INSTALLATION

A. Following inspection and acceptance of substrate condition, install the Acrylabs, Inc. 2001-R45 Roof System using minimum coverage indicated in the manufacturer's guidelines. Adherence to guidelines will yield a minimum membrane thickness of 45 mils over entire surface covered.

B. Initial Installation shall be performed with a manufacturer’s representative who will provide on-site training and application assistance.

C. Where modules intersect, special techniques should be considered.

D. Final inspection by an authorized representative of Acrylabs, Inc. may be required for warranty. Final inspection shall not replace the normal responsibilities of the contracting parties. Request for final inspections must be forwarded, along with a roof plan, to Acrylabs, Inc. upon substantial completion of the project. Any deviations from Acrylabs, Inc. specifications must be noted on the roof plan drawing.

END OF SECTION 07 56 00

SECTION 07 62 00 - SHEET METAL FLASHING

PART 1 - GENERAL

1.1 SUMMARY

A. Submittals: Construction drawings

B. Related Sections

1. Section 07 65 00.01 Flexible Flashing Tape

1.2 SYSTEM DESCRIPTION

A. Flat sheets of 22 ga steel will be custom-fabricated for use as flashing systems around openings, roof penetrations, around entire parapet, and on interior/exterior connections between the house and the courtyard.

PART 2 - PRODUCTS

2.1 FABRICATION

A. Cornell University Project Design and Construction, Metal Shop, Humphreys Service Building, Ithaca, New York 14853; tel: (607) 254-2996; fax: (607) 25-8071

2.2 MATERIALS

A. 22 ga ASTM 606 custom-fabricated flashing components

B. Simpson Strong-Tie A33 and HRS

PART 3 - EXECUTION

3.1 INSTALLATION

A. Installation shall be done by trained professional.

END OF SECTION 07 62 00

SECTION 07 65 00.01 – FLEXIBLE FLASHING TAPE

PART 1 - GENERAL

1.1 SUMMARY

A. Submittals: Construction drawings, product data sheet, manufacturer's installation instructions

B. Related Sections
   1. Section 07 62 00 Sheet Metal Flashing
   2. Section 08 52 00 Wood Windows
   3. Section 08 63 00 Metal-Framed Skylights

1.2 SYSTEM DESCRIPTION

A. Definition: DuPont Flashing Tape is a self-adhering flashing product for application on the jambs and heads of windows and doors. Material is composed pressure sensitive, polypropylene substrate with acrylic based adhesive and shall be used around the house windows and skylights.

B. Performance Requirements: ASTM C920: Standard Specification for Elastometric Joint Sealants; ASTM C1193: Standard Guide for Use of Joint Sealants; ASTM E96: Test Method for Water Vapor Transmission of Materials; ASTM E331: Standard Test Method for Water Penetration of Exterior Windows, Skylights and Curtain Walls by Uniform Static Air Pressure Difference.

PART 2 - PRODUCTS

2.1 MANUFACTURER

A. DuPont Building Innovations; 4417 Lancaster Pike, Chestnut Run Plaza 721, Wilmington, DE 19805; tel: (800) 44-TYVEK (8-9835)

B. MATERIALS
   1. Description: DuPont™ Tyvek® Flashing Tape as manufactured by DuPont Building Innovations
   2. http://www2.dupont.com/Tyvek_Weatherization/en_US/assets/downloads/K-16752_FlashingTapePhysProp.pdf

2.2 QUALITY ASSURANCE

A. Verify substrate and surface conditions are in accordance with flexible flashing manufacturer recommended tolerances prior to installation.

B. Review requirements for sequencing of installation of flexible flashing assembly with installation of windows, doors, louvers and wall penetrations to provide a weather-tight flashing assembly.

PART 3 - EXECUTION

3.1 DELIVERY, STORAGE & HANDLING

A. Deliver flexible flashing materials and components in manufacturer's original, unopened, undamaged containers with identification labels intact.

3.2 Store flexible flashing materials as recommended by manufacturer. Keep away from open flame or sources of ignition.

3.3 INSTALLATION

A. Follow all installation directions provided by manufacturer.

B. Best when installed above 25°F (-4°C).

END OF SECTION 07 65 00.01

SECTION 07 71 33 MANUFACTURED SCUPPERS

PART 1 - GENERAL

1.1 SUMMARY

A. Submittals: Construction drawings

B. Related Sections

1. Section 07 22 00 Roof Insulation

1.2 SYSTEM DESCRIPTION

A. Scuppers shall be placed around the perimeter of each of the three circular modules to facilitate positive drainage to the outer edge of the building, away from the central courtyard. Scuppers shall be attached to parapet and sealed with fluid-applied roofing.

B. Performance Requirements: IPC Chapter 11 – Storm drainage

PART 2 - PRODUCTS

2.1 MANUFACTURER

A. Cornell University Project Design and Construction, Metal Shop, Humphreys Service Building, Ithaca, New York 14853; tel: (607) 254-2996; fax: (607) 25-8071

B. MATERIALS

1. Custom-fabricated scupper components with dimensioned lumber shape and sheet metal coverings.

PART 3 - EXECUTION

3.1 INSTALLATION

A. Scuppers shall be installed by professionals.

END OF SECTION 07 71 33

SECTION 07 72 00 - ROOF VENTS

PART 1 - GENERAL

1.1 SUMMARY

A. Submittals: Product data sheets, construction drawings

1.2 SYSTEM DESCRIPTION

A. Roof vent shall be installed in the roof of the mechanical closet.

PART 2 - PRODUCTS

2.1 MANUFACTURER

A. Broan-NuTone LLC, 926 West State Street, Hardford, WI 52027; tel: (800) 637-1453

2.2 MATERIALS

A. Kit including 8 ft. of 4” flexible, 2-ply metallic laminate ducting, 4” diameter metal duct connector, 2 duct clamps, 4” and 3” reducer and Model 636 Roof Cap (24 ga. CRCQ steel, black electrically-bonded epoxy finish with built-in backdraft damper and bird screen.
   1. Model RVK1A Flexible Roofing Duct Kit
   2. http://www.broan.com/ImageLibrary/broan/pdf/Specifications/99041930.pdf

PART 3 - EXECUTION

3.1 INSTALLATION

A. Installation shall follow manufacturer’s instructions. Placement of vent shall be located as indicated by construction drawings.

END OF SECTION 07 72 00

SECTION 07 92 00 – JOINT SEALANTS

PART 1 - GENERAL

1.1 SUMMARY

A. Submittals: Product data, construction drawings

1.2 SYSTEM DESCRIPTION

A. Join sealants shall be used around windows, doors, and vents on the exterior of the house.

B. Performance Requirements: Meet ASTM Specification C 920, Type S, Grade NS; Meet requirements of FDA Regulation No. 21 CFR 177.2600; 50 year durability guarantee.

PART 2 - PRODUCTS

2.1 MANUFACTURER

A. DAP Inc., 2400 Boston Street, Baltimore, Maryland 21224; tel: (410) 675-2199

2.2 MATERIALS

A. DAP® 100% Silicone Rubber Sealant is an all-purpose, one component, acetoxy cure sealant ideal for indoor/outdoor use. It provides a watertight, flexible seal that won't crack, crumble or shrink. Once cured, it is unaffected by temperature extremes (-40°F to 400°F).
   1. DAP® 100% Silicone Rubber Sealant - clear
   2. http://files.buildsite.com/dbderived-f/dap/derived_files/derived227696.pdf

B. DAP® ALEX® Painter's Acrylic Latex Caulk is an all-purpose caulking product formulated to last 25 years or more. It ensures a durable seal to prevent air and moisture from passing through cracks and joints for interior and exterior applications
   1. DAP® ALEX® Painter's Acrylic Latex Caulk - white
   2. http://files.buildsite.com/dbderived-f/dap/derived_files/derived317582.pdf

PART 3 - EXECUTION

3.1 DELIVERY, STORAGE & HANDLING

A. Store in temperatures below 90°F in a dry place.

3.2 INSTALLATION

A. For best results, application temperature is between -35°F and 140°F.

B. Joint width should not exceed ½". If joint depth exceeds ½", use backer rod material.

C. Not paintable. Paint surfaces before sealing.

D. Remove excess uncured sealant from surfaces and tools with mineral spirits. Wash hands with soap and water. Cured sealant must be cut or scraped away.

END OF SECTION 07 92 00

SECTION 08 11 13 – HOLLOW METAL DOORS AND FRAMES

PART 1 - GENERAL

1.1 SUMMARY

A. Submittals: Product data, door and hardware schedules, construction drawings

1.2 SYSTEM DESCRIPTION

A. Metal swinging doors shall provide interior access to the mechanical closet's electrical panels.

PART 2 - PRODUCTS

2.1 MANUFACTURER

A. CURRIES Company, 1502 12th St. NW, Mason City, IA 50401; tel: (641) 423-1334; fax: (641) 424-8305; email: curries@curries.com

2.2 VENDOR

A. Kelly Bros. Home and Design Center, 3502 Latonia Ave, Covington, KY 41015; tel: (859) 581-0400; fax: (859) 655-8135

2.3 MATERIALS

A. Exterior hollow metal door with insulated polystyrene core
   1. 607 Series
   2. http://www.curries.com/Other/Curries/Documents/607 Tech Data 2008.pdf
   3. 607 Series Rixon Hinge
   4. http://www.assaabloydss.com/library/catalogs/RIXSON/pdf/RC_Pivots%20and%20Pivot%20Sets.pdf

B. C Series Drywall Frame
   1. http://www.curries.com/Other/Curries/Documents/Metal Frames/Drywall Frame Tech Data 2008.pdf

PART 3 - EXECUTION

3.1 INSTALLATION

A. Installation shall follow manufacturer's instructions.

END OF SECTION 08 11 13

SECTION 08 14 00 – WOOD DOORS

PART 1 - GENERAL

1.1 SUMMARY

A. Submittals: Product data, door and hardware schedules, construction drawings

1.2 SYSTEM DESCRIPTION

A. A swinging wood door shall provide interior access to the washer/dryer closet and shall serve as a noise barrier during laundry time.

PART 2 - PRODUCTS

2.1 MANUFACTURER

A. Jeld-Wen Window and Doors Inc., PO Box 1329 Klamath Falls, OR 97601; tel: (800) JELD-WEN

B. MATERIALS
   1. ProCore The Quiet Door
   2. http://www.jeld-wen.com/attributes/universal.cfm/attribute_id/3824

PART 3 - EXECUTION

3.1 INSTALLATION

A. Installation shall follow manufacturer's instructions.

END OF SECTION 08 14 00

SECTION 08 14 73 – WOOD SLIDING DOORS

PART 1 - GENERAL

1.1 SUMMARY

A. Submittals: Product data, construction drawings, door schedule, warranty information

1.2 SYSTEM DESCRIPTION

A. NanaWall system shall provide glazing between the courtyard and the interior of the house. The system is designed and fabricated to eliminate any members in the corners to provide for the largest extension of space between the living room module and the outdoor courtyard. WD65 is the folding wood framed, top hung system for special applications.

B. Performance Requirements: Unit to comply with applicable manufacturer's independently certified testing results. Testing results include air infiltration in accordance with ASTM E 283, water penetration in accordance with ASTM E 547, structural loading in accordance with ASTM E 330, and forced entry in accordance with AAMA 1303.5 and CAWM 300-96.

PART 2 - PRODUCTS

2.1 MANUFACTURER

A. Nana Wall Systems, Inc., 707 Redwood Highway, Mill Valley, CA 94941; tel: (415) 383-3148; fax: (415) 383-0312

2.2 MATERIALS

A. 5 Panel, douglas fir, standard sill, low E insulated tempered argon-filled glass
   1. WD 65
   2. http://www.nanawall.com/Products/InfoWd65.aspx

B. 3 Panel, douglas fir, standard sill, low E insulated tempered argon-filled glass
   1. WD 65
   2. http://www.nanawall.com/Products/InfoWd65.aspx

2.3 HARDWARE

A. Multi point locking with latch, deadbolt and lever handles on both sides on primary swing panel only.

2.4 QUALITY ASSURANCE

A. Manufacturer: Provide complete, precision built, engineered, pre-fitted unit by a single source manufacturer with at least 15 years experience in providing folding/sliding door systems for large openings in the North American market.

PART 3 - EXECUTION

3.1 DELIVERY, STORAGE & HANDLING

A. Deliver materials to job site in sealed, unopened cartons or crates. Protect units from damage. Store material under cover, protected from weather and construction activities.

B. Condition wood components to average prevailing relative humidity before installation.

C. Do not subject wood components to extreme nor rapid changes in heat or humidity.

D. Do not use forced heat to dry out building.

E. Store flat in dry, well ventilated area out of direct sunlight.

3.2 INSTALLATION

A. Install frame in accordance with manufacturer's recommendations and installation instructions. Properly flash and waterproof around the perimeter of the opening.

B. Installer to provide appropriate anchorage devices and to securely and rigidly fit frame in place, absolutely level, straight, plumb and square. Install frame in proper elevation, plane and location, and in proper alignment with other work.

C. Install panels, handles and lock set in accordance with manufacturer's recommendations and installation instructions.

D. If necessary, adjust hardware for proper operation.

END OF SECTION 08 14 73

SECTION 08 42 26.10 – SWINGING GLASS DOOR

PART 1 - GENERAL

1.1 SUMMARY

A. Submittals: Product data, construction drawings

B. Related Sections

1. Section 08 81 13.30 Sandblasted Glass

1.2 SYSTEM DESCRIPTION

A. The custom-designed and –fabricated swinging glass door shall provide semi-opaque access to the wet bathroom.

PART 2 - PRODUCTS

2.1 FABRICATION

A. Inlet Glass & Mirror, 709 Willow Ave, Ithaca NY 14850; tel: (607) 272-3015

2.2 MANUFACTURER

A. C.R. Laurence Co., Inc., 2503 E. Vernon Ave., Los Angeles, California 90058; tel: (800) 421-6144; fax: (800) 262-3299

2.3 MATERIALS

A. Swinging glass door
   1. Custom-fabricated

B. Hardware
   1. Glass Door Square Tubing Pull Handle
   2. 6”x6” SQ Series
   3. http://www.crlaurence.com/ProductPages/S/SQ6X6CH_36777-high.html?Origin=
   4. Glass Door Wall Mount Hinge
   5. 37 Viena Series Chrome
   6. http://www.crlaurence.com/ProductPages/V/V1E037CH_23491-high.html?Origin=

PART 3 - EXECUTION

3.1 DELIVERY, STORAGE & HANDLING

A. Glass door shall be removed before the building is relocated.

3.2 INSTALLATION

A. Installation shall follow guidelines provided by fabricator.

END OF SECTION 08 42 26.10

SECTION 08 52 00 – WOOD WINDOWS

PART 1 - GENERAL

1.1 SUMMARY

A. Submittals: Product data, construction drawings, door schedule, warranty information

1.2 SYSTEM DESCRIPTION

A. NanaWall windows shall be used to provide additional daylighting to the interior of the house. Glazed openings are designed in the circular modules and corridors.

B. Performance Requirements: Unit to comply with applicable manufacturer's independently certified testing results. Testing results include air infiltration in accordance with ASTM E 283, water penetration in accordance with ASTM E 547, structural loading in accordance with ASTM E 330, and forced entry in accordance with AAMA 1303.5 and CAWM 300-96.

PART 2 - PRODUCTS

2.1 MANUFACTURER

A. Nana Wall Systems, Inc., 707 Redwood Highway, Mill Valley, CA 94941; tel: (415) 383-3148; fax: (415) 383-0312

2.2 MATERIALS

A. Fixed Window, PEFC Certified Vertical Grain Douglas Fir, Low E Insulated
   1. WD 68F
   2. http://www.nanawall.com/Products/Infowd68.aspx

B. Tilt-Turn Operable Window, PEFC Certified Douglas Fir, Low E Insulated
   1. WD 68TT
   2. http://www.nanawall.com/Products/Infowd68.aspx

2.3 QUALITY ASSURANCE

A. Manufacturer: Provide complete, precision built, engineered, pre-fitted unit by a single source manufacturer with at least 15 years experience in providing folding/sliding door systems for large openings in the North American market.

PART 3 - EXECUTION

3.1 DELIVERY, STORAGE & HANDLING

A. Deliver materials to job site in sealed, unopened cartons or crates. Protect units from damage. Store material under cover, protected from weather and construction activities.

B. Condition wood components to average prevailing relative humidity before installation.

C. Do not subject wood components to extreme nor rapid changes in heat or humidity.

D. Do not use forced heat to dry out building.

E. Store flat in dry, well ventilated area out of direct sunlight.

3.2 INSTALLATION

A. Install frame in accordance with manufacturer's recommendations and installation instructions. Properly flash and waterproof around the perimeter of the opening.

B. Installer to provide appropriate anchorage devices and to securely and rigidly fit frame in place, absolutely level, straight, plumb and square. Install frame in proper elevation, plane and location, and in proper alignment with other work.

C. Install panels, handles and lock set in accordance with manufacturer's recommendations and installation instructions.

D. If necessary, adjust hardware for proper operation.

END OF SECTION 08 52 00

SECTION 08 63 00 – METAL FRAMED SKYLIGHTS

PART 1 - GENERAL

1.1 SUMMARY

A. Submittals: Product data, construction drawings, warranty information

1.2 SYSTEM DESCRIPTION

A. Designed for curb mounted installations, the VCE electric venting skylight ist he ideal daylighting solution for overhead applications. It brings in abundant natural light and with the touch of a button, opens to let in fresh air. And if you forget to close it, the VCE also closes automatically in case of rain. Skylights shall be installed in each of the house modules and bathroom for natural ventilation.

B. Performance Requirements: ICBO/ICC AC-16, No water penetration noted when measured in accordance with AAMA/WDMA/1600/IS7, PA 202, and ANSI/ASTM E 331; ENERGY START approval

PART 2 - PRODUCTS

2.1 MANUFACTURER

A. VELUX America Inc., which is located at: 450 Old Brickyard Rd. ; Greenwood, SC 29649; tel: 864-941-5360; fax: 864-943-2631

B. MATERIALS
1. Electric Venting Skylight
2. VCE 2222
3. http://www.veluxusa.com/products/residentialSkylights/skylights/electricVenting/vce/

C. ACCESSORIES
1. Pre-installed concealed motor, control system, and rain sensors
2. Remote control

PART 3 - EXECUTION

3.1 INSTALLATION

A. Installation shall comply with manufacturer's instructions.

END OF SECTION 08 63 00

SECTION 08 81 13.30 – SANDBLASTED GLASS

PART 1 - GENERAL

1.1 SUMMARY

A. Submittals: Product data, shop drawings

B. Related Sections

1. Section 08 42 26.10 Swinging Glass Door

1.2 SYSTEM DESCRIPTION

A. Glass wall and glass door constitute the west wall of the wet bathroom. Glass is 3/8” thick, installed in two U-channel tracks. The door is self-centering, able to close within 20 degrees of full closure.

PART 2 - PRODUCTS

2.1 FABRICATOR

A. Inlet Glass and Mirror, 709 Willow Ave, Ithaca NY 14850; tel: (607) 272-3015

2.2 MANUFACTURER

A. C.R. Laurence Co., Inc., 2503 E. Vernon Ave., Los Angeles, California 90058; tel: (800) 421-6144; fax: (800) 262-3299

2.3 MATERIALS

A. Custom-fabricated, sand-blasted, single-piece glass wall

B. Hardware
1. Satin Anodized 3/8” Single “U-Channel” Aluminum track
2. http://products.crlaurence.com/ProductPages/D/D321A_11974.html?Origin=

PART 3 - EXECUTION

3.1 DELIVERY, STORAGE & HANDLING

A. Glass door shall be removed before the building is relocated.

3.2 INSTALLATION

A. Installation shall follow guidelines provided by fabricator.

END OF SECTION 08 81 13.30

SECTION 08 95 16 – WALL VENTS

PART 1 - GENERAL

1.1 SUMMARY

A. Submittals: Construction drawings

1.2 SYSTEM DESCRIPTION

A. A custom vent cover for the bathroom air exchanger shall be fabricated and installed on the exterior of the house

PART 2 - PRODUCTS

2.1 FABRICATOR

A. Cornell University Project Design and Construction, Metal Shop, Humphreys Service Building, Ithaca, New York 14853; tel: (607) 254-2996; fax: (607) 25-8071

B. MATERIALS
   1. Custom-designed sheet metal vent cover

PART 3 - EXECUTION

3.1 INSTALLATION

A. Vent shall be installed on house by PDC.

END OF SECTION 08 95 16

SECTION 09 22 16 - METAL STUDS AND TRACK

GENERAL

1.1 SUMMARY

A. Submittals: Structural calculations, product data, installation manual, construction drawings

B. Related Sections

1. Section 05 12 13 Structural Steel Framing

1.2 SYSTEM DESCRIPTION

A. The wall assembly shall include metal studs for the mounting finish materials and specialty tracks to accommodate wall curvature.

B. Performance Requirements
1. All Exterior and Interior load-bearing applications are to be engineered by a qualified professional Engineer.

PART 2 - PRODUCTS

2.1 MANUFACTURER

A. Flex-Ability Concepts, 5500 SW 36th Street, Oklahoma City, OK 73179; tel: (405) 996-5343; fax: (405) 996-5353

2.2 MATERIALS

A. 2x4 C Channel columns

B. C- shaped flexible steel track with banded flanges and screw attachments at every flange interval for top.
1. Flex-C Trac
2. http://www.flexc.com/files/products/commercial/2.5.pdf

C. C- shaped flexible steel track with banded flanges and screw attachments at every flange interval for bottom.
1. Flex-C Trac
2. http://www.flexc.com/files/products/commercial/2.5.pdf

2.3 FRAMING ACCESSORIES

A. Fabricate steel-framing accessories of the same material and finish used for framing members; with a minimum yield strength of 33.000 psi.

B. Provide accessories of manufacturer's standard thickness and configuration, unless otherwise indicated.Verify availability of lumber with 15 percent maximum moisture content before retaining.

2.4 FASTENERS

A. Mechanical Fasteners: Corrosion-resistant coated, self-drilling, self-threading steel drill screws.

B. Head Type: Low-profile head beneath sheathing, manufacturer's standard elsewhere.

PART 3 - EXECUTION

A. Installation shall follow manufacturer’s instructions.

END OF SECTION 09 22 16

SECTION 09 28 00 – BACKING BOARDS AND UNDERLAYMENTS

PART 1 - GENERAL

1.1 SUMMARY

A. Submittals: Product data, construction drawings

B. Related Sections

1. 09 91 00.01 Waterproof Primer & Interior Paint

1.2 SYSTEM DESCRIPTION

A. Wallboard shall be installed in the bathroom and coated with waterproofing primer.

PART 2 - PRODUCTS

2.1 MANUFACTURER

A. National Gypsum Company Headquarters, 2001 Rexford Road, Charlotte, North Carolina 28211; tel: (704) 365-7300; fax: (800)

B. MATERIALS
1. Gold Bond XP Wallboard
2. http://nationalgypsum.com/submittal/default2.aspx?csi=09 29 00

PART 3 - EXECUTION

3.1 DELIVERY, STORAGE & HANDLING

A. Wallboard should be stored in a flat dry place until installation

3.2 INSTALLATION

A. Installation shall comply with manufacturer's instructions.

END OF SECTION 09 28 00

SECTION 09 29 00 – GYPSUM BOARD

PART 1 - GENERAL

1.1 SUMMARY

A. Submittals: Product data, construction drawings

1.2 SYSTEM DESCRIPTION

A. Gypsum board shall be applied as interior finish material in bedroom and bathroom.

PART 2 - PRODUCTS

2.1 MANUFACTURER

A. National Gypsum Company Headquarters, 2001 Rexford Road, Charlotte, North Carolina 28211; tel: (704) 365-7300; fax: (800)

2.2 MATERIALS

A. ¼" High Flex Wallboard
   1. http://nationalgypsum.com/submittal/09 29 00-38.pdf

B. ½" High Flex Wallboard
   1. http://nationalgypsum.com/submittal/09 29 00-06.pdf

C. End Block

PART 3 - EXECUTION

3.1 DELIVERY, STORAGE & HANDLING

A. Wallboard should be stored in a flat dry place until installation

3.2 INSTALLATION

A. Installation shall comply with manufacturer's instructions.

END OF SECTION 09 29 00

SECTION 09 31 13 – THIN-SET CERAMIC TILING

PART 1 - GENERAL

1.1 SUMMARY

A. Submittals: Product data, construction drawings

B. Related Sections

1. Section 09 34 00 Waterproofing-Membrane Tiling

1.2 SYSTEM DESCRIPTION

A. Thin Set Ceramic tiles shall be installed in wet bathroom as finish surface.

PART 2 - PRODUCTS

2.1 MANUFACTURER

A. DalTile Corporation, 7834 C.F. Hawn Frwy, Dallas, TX 75217; tel: (214) 398-1411

B. MATERIALS
1. Ceramic Tile, Artic
2. D617
3. http://daltileproducts.com/series.cfm?series=240& - 3613

2.2 QUALITY ASSURANCE

A. Tile should be examined for damage, cracking and defects prior to installation.

PART 3 - EXECUTION

3.1 INSTALLATION

A. Tile shall be installed over Kerdi membrane with latex based thin set grout.

END OF SECTION 09 31 13

SECTION 09 34 00 – WATERPROOFING-MEMBRANE TILING

PART 1 - GENERAL

1.1 SUMMARY

A. Submittals: Manufacturer's product data and installation instructions for each type of product indicated, construction drawings

1.2 SYSTEM DESCRIPTION

A. The open shower bathroom shall be waterproofed and finished with Schluter products and Dal-tile.

B. Performance requirements: IGC 195, CSA B79

PART 2 - PRODUCTS

2.1 MANUFACTURERS

A. Schluter Systems, L.P., 194 Pleasant Ridge Road, Plattsburgh, NY 12901-5841; tel: (800) 472-4588; fax (800) 477-9783

2.2 MATERIALS

A. Floor Drain with Integrated Bonding Flange - Schluter®-KERDI-DRAIN
   1. floor drain 11-25/32 inch (300 mm) diameter, trapezoid-perforated, integrated bonding flange with polypropylene fleece thermally laminated to the surface and hubbed connection to 2 inch (50 mm) drain pipe. Grate assembly includes 4 inch x 4 inch (102 mm x 102 mm) square grate, height adjustment collar, and lateral adjustment ring with trapezoid perforations.
   2. KD2/PVC
   3. http://www.schluter.com/print/8_2_kerdi_drain_3963.aspx

B. Sloped Shower Tray Schluter®-KERDI
   1. ST 183
   2. http://www.schluter.com/print/8_3_kerdi_st_sc_sr_3964.aspx

C. Waterproofing Membrane, Schluter®-KERDI
   1. 0.008 inch (0.2 mm) thick, orange polyethylene membrane, with polypropylene fleece laminated on both sides
   2. KERDI 200
   3. http://www.schluter.com/8_1_kerdi.aspx

PART 3 - EXECUTION

3.1 DELIVERY, STORAGE AND HANDLING

A. Deliver and store packaged materials in original containers with seals unbroken and labels intact until time of use.

3.2 INSTALLATION

A. Comply with TCA's "Handbook for Ceramic Tile Installation" for TCA installation methods specified in tile installation schedules. Comply with parts of ANSI A108 Series "Specifications for Installation of Ceramic Tile" that are referenced in TCA installation methods, specified in tile installation schedules, and apply to types of setting and grouting materials used.

1. For installations indicated below, follow procedures in ANSI's "Specifications for the Installation of Ceramic Tile" for providing 95 percent mortar coverage.

a. Exterior tile floors.
b. Tile floors in wet areas.
c. Tile swimming pool decks.
d. Tile floors in laundries.
e. Tile floors composed of tiles 8 by 8 inches (200 by 200 mm) or larger.
f. Tile floors composed of rib-backed tiles.

B. Perform cutting and drilling of tile without marring visible surfaces. Carefully grind cut edges of tile abutting trim, finish, or built-in items for straight aligned joints. Fit tile closely to electrical outlets, piping, fixtures, and other penetrations so plates, collars, or covers overlap tile.

C. Lay tile in grid pattern unless otherwise indicated. Align joints where adjoining tiles on floor, base, walls, and trim are the same size.

D. Install [cementitious backer units] [and] [fiber-cement underlayment] and treat joints according to ANSI A108.11.

E. Where indicated, prepare substrates to receive waterproofing by applying a reinforced mortar bed that complies with ANSI A108.1A and is sloped 1/4 inch per foot (1:50) toward drains.

F. Install waterproofing to comply with ANSI A108.13.

G. Do not install tile over waterproofing until waterproofing has cured and been tested to determine that it is watertight.

H. Install stone thresholds in same type of setting bed as adjacent floor unless otherwise indicated. At locations where mortar bed (thickset) would otherwise be exposed above adjacent floor finishes, set thresholds in latex-portland cement mortar (thin set).

I. Exterior Floor Tile Installation Method(s):

1. Exterior Patios and Walkways over Concrete: [TCA F101 (cement mortar bed)] [TCA F101 (cement mortar bed over waterproof membrane)] [TCA F102 (thin-set mortar)] [TCA F102 (thin-set mortar over waterproof membrane)].

J. Exterior Wall Tile Installation Method(s):

1. Exterior Walls over Concrete or Masonry: [TCA W201 (cement mortar bed, on metal lath over waterproof membrane)] [TCA W202 (thin-set mortar)].

K. Interior Floor Tile Installation Method(s):

1. Over Waterproof Membranes on Wood Subfloors: TCA F121 (cement mortar bed).

END OF SECTION 09 34 00

SECTION 09 64 29 – WOOD STRIP AND PLANK FLOORING

PART 1 - GENERAL

1.1 SUMMARY

A. Submittals: Product data, product samples, construction drawings

1.2 SYSTEM DESCRIPTION

A. Reclaimed Ash shall be used as wood flooring finish material in the house. Flooring may be treated with white wash as indicated by construction drawings.

PART 2 - PRODUCTS

2.1 MANUFACTURER

A. Pioneer Millworks Eastern Office, 1180 Commercial Drive, Farmington, NY 14425; tel: (585) 924-9970; fax: (585) 924-9962

B. MATERIALS
   1. Reclaimed Ash Engineered flooring
   2. American Gothic Prefinished Reclaimed Ash
   3. http://www.pioneermillworks.com/Pages/SpeciesAsh.html

PART 3 - EXECUTION

3.1 DELIVERY, STORAGE & HANDLING

A. Wood pieces should be stored in flat, dry location until installation.

3.2 INSTALLATION

A. Professional experienced in laying wood floors should do installation.

END OF SECTION 09 64 29

SECTION 09 70 00 – WALL FINISHES

PART 1 - GENERAL

1.1 SUMMARY

A. Submittals: Product data, construction drawings

1.2 SYSTEM DESCRIPTION

A. Wall covering in living room, kitchen, and bedroom modules shall be ash panels.

B. Performance Requirements: Panels must conform to the wall curvature as specified in the construction drawings.

PART 2 - PRODUCTS

2.1 MANUFACTURER

A. Danby Hardwoods, 299 Hornbrook Rd., Ithaca, NY 14850; tel: (607) 272-8561

B. MATERIALS
   1. 3/16” Ash Panels
   2. Product information unavailable online

2.2 QUALITY ASSURANCE

A. Panels should be examined for defects prior to installation.

PART 3 - EXECUTION

3.1 DELIVERY, STORAGE & HANDLING

A. Wood pieces should be stored in flat, dry location until installation.

3.2 INSTALLATION

A. Wood should be trained to correct radius curvature prior to installation.

B. Panels shall be installed such that no gaps are revealed.

END OF SECTION 09 70 00

SECTION 09 91 00.01 – WATERPROOF PRIMER AND INTERIOR PAINT

PART 1 - GENERAL

1.1 SUMMARY

A. Submittals: Product data, construction drawings

B. Related Sections

1. Section 09 70 00 Wall Finishes

1.2 SYSTEM DESCRIPTION

A. A protective waterproofing primer shall be used to cover exposed Beech hardwood surfaces in the wet bathroom.

PART 2 - PRODUCTS

2.1 MANUFACTURER

A. The Sherwin-Williams Company 101 Prospect Avenue N. W. Cleveland, Ohio 44115 tel: (216) 566-2000

B. MATERIALS
1. Zero-VOC Interior Latex Paint
2. Harmony Interior Arcylic Latex
3. http://www.sherwin-williams.com/pro/sherwin_williams_paint/products/harmony/index.jsp

PART 3 - EXECUTION

3.1 INSTALLATION

A. Waterproofing should be applied prior to any test or usage of shower.

END OF SECTION 09 91 00.01

SECTION 09 91 23 – INTERIOR PAINTING

PART 1 - GENERAL

1.1 SUMMARY

A. Submittals: Product data, construction drawings

1.2 SYSTEM DESCRIPTION

A. Interior paint shall be applied to all interior wall and ceiling surfaces.

B. Performance Requirements: All interior paint should contain no VOC's.

PART 2 - PRODUCTS

2.1 MANUFACTURERS

A. Allbäck via Viking Sales, Inc., 7710 Victor-Mendon Road, Victor, NY 14564; tel (585) 924-8070; e-mail: info@solventfreepaint.com

B. The Sherwin-Williams Company 101 Prospect Avenue N. W. Cleveland, Ohio 44115 tel: (216) 566-2000

2.2 MATERIALS

A. Purified Linseed Oil
   1. Purified Boiled Linseed Oil
   2. http://www.solventfreepaint.com/cleaned_linseed_oil.htm

B. Linseed Oil Paint
   1. Interior Flat Paint
   2. White Linus Interior Flat Paint #50209
   3. http://www.solventfreepaint.com/linus/white.htm

C. Paint
   1. Zero-VOC Interior Latex Paint
   2. Harmony Interior Arcylic Latex
   3. http://www.sherwin-williams.com/pro/sherwin_williams_paint/products/harmony/index.jsp

PART 3 - EXECUTION

3.1 INSTALLATION

A. All non-steel ceiling surfaces and non-curved walls to be painted with Harmony Interior Acrylic Latex. All exposed Beech wood surfaces to be coated in Organic Linseed Oil. Ash wall paneling to be finished in Linseed Oil and Linus Interior Flat Paint mix to achieve a white-wash.

END OF SECTION 09 91 23

SECTION 09 96 46 – INTUMESCENT PAINT

PART 1 - GENERAL

1.1 SUMMARY

A. Submittals: Product data

1.2 SYSTEM DESCRIPTION

A. Contego Passive Fire Barrier is a heavy-bodied, single-part latex designed for use on construction materials such as Oriented Strand Board (OSB), Structural Insulated Panels (SIPS), framing lumber, plywood, trusses, drywall, doors, and more. May also be used on aluminum and steel sheets, round and box steel columns.

PART 2 - PRODUCTS

2.1 MANUFACTURER

A. Contego International, Inc., PO Box 49, Rochester, IN 46975; tel: (800) 434-6444

B. Passive Fire Barrier Latex; Thin Film Intumescent
   1. http://www.contegointernational.com/products_3.cfm

PART 3 - EXECUTION

3.1 DELIVERY, STORAGE & HANDLING

A. DO NOT allow this product to freeze. If frozen the intumescent properties of this product may be adversely affected.

B. Do not allow storage temperature to exceed 100 degrees F (38 C).

C. If possible, store this product above 65 degrees F (18 C) for 48 hours prior to application – this will aid you during the application process.

D. Do not reuse opened paint after 48 hours; the curing process has begun and may affect the product's performance.

E. If you wish to set some paint aside for future touch-up work fill a small clean container completely with fresh paint from a 5 gallon bucket after it has been mixed as described in the 'Application' section below and then seal tightly.

3.2 INSTALLATION

A. VERY IMPORTANT: This product must be mixed thoroughly before application. We recommend using a mixing paddle with power drill for a minimum of three (3) minutes at highest speed. Concentrate on the bottom of the bucket periodically moving to the middle and top areas. Product is properly mixed when: (1) there are no solids attached to the paddle after mixing at the bottom and (2) the paint shows a uniform consistency when mixed at the surface.

B. DO NOT dilute or thin this product with any other liquid.

C. This product may be applied as any other high quality latex based paint: brush, roller, airless spray - either gravity feed or suction, or compressed air sprayers.

D. Surfaces must be clean, dry, and free of any grease, oils or other contaminants. Previous layers of paint must be solidly adhered to the surface with no flaking, chipping, or cracks. Bare steel should be primed with red oxide primer or its equivalent.

E. Spraying is the recommended method of application. The minimum recommended spray setup is 2500 psi (172 bar) with a .015 inch tip (.38 mm). All Contego test applications are performed using a Graco XR5 with a .017 inch tip (.43 mm).

F. Optimal application temperature is 85 degrees F (29 C); do not attempt application below 55 degrees F (13 C).

G. Coverage: All coverage rates (except steel, below) are expressed on a ‘per coat’ basis. A single coat is applied at a rate of 130 sq feet (12 sqm) per gallon. This is equivalent to a wet coat of 12 mil (.30 mm) that will cure to a dry coat 7 mil thick (.18 mm). While under ideal conditions it is possible to apply a single coat of up to 20-22 mil (.50-.55 mm) wet, two thin coats are recommended to prevent the possibility of cracking while curing.

H. Sheetrock (gypsum), OSB (orientated strand board), plywood, structural lumber, and SIPs (structural insulated panels): Requires two coats; the second can be applied when the first is dry to the touch. Full curing of both coats takes 72 hours.

I. Structural steel: A final dry film coating of 70 mil (1.8 mm) is recommended for adequate protection. Under proper conditions it is possible to achieve this with 6 coats of 20 mil (.50 mm) wet. Under less than ideal conditions, it may be necessary to apply more than 6 coats at a lesser thickness until a total of 120 mil wet (3mm) is achieved. In all cases the next coat may be applied when the prior is dry to the touch.

J. Top coating is optional. To add color or sheen to surfaces Contego PFB may be top coated using virtually any alkyd, or enamel paint as soon as the intumescent coating is dry to the touch. To top coat with acrylic or latex spray or roll initial color coat DO NOT RE ROLL OR TOUCH UP until initial color coat is dry. Failure to wait for first color coat application of acrylic/latex to dry may result in the color coat smearing or rolling off on the roller. Once first color coat of latex/acrylic is dry apply second coat. Top coating does not reduce intumescent capability.

END OF SECTION 09 96 46

SECTION 09 97 13.13 – INTERIOR STEEL COATING

PART 1 - GENERAL

1.1 SUMMARY

A. Submittals: Shop drawings

1.2 SYSTEM DESCRIPTION

A. Steel shall be used as a finish material on various interior elements. Material shall resemble the structural members of the house and will contribute to the agro-industrial aesthetics.

PART 2 - PRODUCTS

2.1 FABRICATION

A. Cornell University Project Design and Construction, Metal Shop, Humphreys Service Building, Ithaca, New York 14853; tel: (607) 254-2996; fax: (607) 25-8071

B. MATERIALS
   1. 22 ga ASTM A606 custom-fabricated interior elements including bedroom blanket chest and kitchen surfaces.

PART 3 - EXECUTION

3.1 INSTALLATION

A. Installation shall be done by trained professional.

END OF SECTION 09 97 13.13

SECTION 10 31 00 – FIREPLACES AND STOVES

PART 1 - GENERAL

1.1 SUMMARY

A. Submittals: Product data, construction drawings

1.2 SYSTEM DESCRIPTION

A. The courtyard shall feature an indoor/outdoor, environmentally friendly open fireplace. The EcoSmart™ Fire is flue less and does not require any installation or utility connection for fuel supply.

B. Performance requirements: UL/ULC Listed; compliancy with ISO 9001:2000

PART 2 - PRODUCTS

2.1 MANUFACTURER

A. EcoSmart Inc., 1928 Cotner Avenue, Los Angeles 90025 CA; tel: (310) 914-3335; fax: (310) 914-3339

B. MATERIALS
1. Modular, denatured ethanol-burning, fireplace
2. Firebox 350SS
3. http://www.ecosmartfire.com/products/country_233/794795912EcoSmart_RR_350SS.pdf

2.2 QUALITY ASSURANCE

A. Product shall be inspected upon delivery to ensure no damage has occurred in transport.

PART 3 - EXECUTION

3.1 INSTALLATION

A. The Firebox unit shall be installed in the exterior wall of the mechanical closet.

B. Installation shall follow manufacturer's instructions.

END OF SECTION 10 31 00

SECTION 10 44 16.13 – PORTABLE FIRE EXTINGUISHERS

PART 1 - GENERAL

1.1 SUMMARY

A. Submittals: Product information, Material Safety Data Sheets

1.2 SYSTEM DESCRIPTION

A. The Full Home extinguisher shall be installed on the kitchen island unit.

B. Performance Requirements: Meet NFPA requirements for living areas, garages, and workshops

PART 2 - PRODUCTS

2.1 MANUFACTURER

A. Kidde Residential and Commercial Division, 1016 Corporate Park Drive, Mebane, NC 27302; tel: (919) 563-2711

B. MATERIALS
1. Full Home extinguisher
2. Part number 21006704
3. http://www.kidde.com/utcfs/ws-384/Assets/FullHome_Sheet.pdf

PART 3 - EXECUTION

3.1 INSTALLATION

A. Fire extinguisher shall be wall-mounted, clearly visible, and shall not be obstructed by objects, surfaces, or other items.

END OF SECTION 10 44 16.13

SECTION 11 26 00 – KITCHEN UNITS

PART 1 - GENERAL

1.1 SUMMARY

A. Submittals: Product data and shop drawings

B. Related Sections
1. 11 31 13 Residential Kitchen Appliances
2. 12 40 00 Furnishing and Accessories
3. 22 41 39 Residential Faucets, Supplies and Trim
4. 22 41 16 Residential Lavatories and Sinks
5. 25 13 16 Integrated Automation

1.2 SYSTEM DESCRIPTION

A. Custom- designed and -fabricated kitchen unit shall include refrigerator/freezer, stove/oven, dishwasher and sink appliances. The unit will be composed of a steel structure and enclosure with hardwood beech countertop surfaces. The table shall extend to accommodate for large groups.

PART 2 - PRODUCTS

2.1 FABRICATION + DESIGN

A. Spencer Lapp, 50 Canada Rd., Painted Post NY 14870; tel: (607) 368-4750

2.2 MATERIALS

2.3 FINISH AND STRUCTURAL COMPONENTS

A. Exterior: 16 ga cold-rolled steel; powder-coated

B. Countertop: 2” Beech laminated

C. Structure: 1¼” x 1¼” steel angle stock

2.4 ACCESSORIES

A. Invisible hinges
1. #208
2. http://www.hinge.com/product/specifications/

B. Cabinet Drawer and Door Rollers
1. 1714A3
2. http://www.mcmaster.com/ - 1714a3/=233cq0

C. Full-Extension Side-Mount Drawer Slides with Lift-Out Release
   1. 17165A33
   2. http://www.mcmaster.com/ - 17165a33/=233dc5

D. APPLIANCES
   1. Leibherr refrigerator
   2. Whirlpool undercounter dishwasher
   3. Whirlpool electric built-in oven
   4. Diva stovetop
   5. Kohler undercounter stainless steel sink
   6. Kohler kitchen sink strainer
   7. Kohler wall-mount kitchen sink faucet

PART 3 - EXECUTION

3.1 DELIVERY, STORAGE & HANDLING

A. Delivery: Kitchen unit will be delivered to site in parts. Sheet metal panels, frame pieces, countertop, table, and all appliances should be assembled in sequence according to shop drawings.

3.2 INSTALLATION

A. Installation should be done by trained professionals after finish floor of house is complete.

END OF SECTION 11 26 00

SECTION 11 28 13 – CUSTOM BUILD COMPUTER

PART 1 - GENERAL

1.1 SUMMARY

A. Submittals: Product data, fabrication diagrams

B. Related Sections

1. DIVISION 25 Integrated Automation
2. 26 09 00 Instrumentation and Control for Electrical systems

1.2 SYSTEM DESCRIPTION

A. A custom-built personal computer shall serve as the house controls and communications center. Software shall be installed to operate automated integration and audio-visual systems.

PART 2 - PRODUCTS

2.1 DISTRIBUTOR

A. Newegg.com, 9997 E. Rose Hills Road, Whittier, CA 90601; tel: (800) 390-1119; fax: (909) 395-8907

2.2 MATERIALS

A. Asus P5N7A-VM Motherboard
1. http://www.newegg.com/Product/Prodyct.aspx?Item=N82E16813131348

B. Antec HTPC Case
1. http://www.newegg.com/Product/Prodyct.aspx?Item= N82E16811129054

C. Windows Vista Home Premium
1. SP1 32 Bit OEM
2. http://www.newegg.com/Product/Prodyct.aspx?Item= N82E16832116485

D. Intel Core 2 Duo E8400
1. http://www.newegg.com/Product/Prodyct.aspx?Item= N82E16819115037

E. Seythe 120mm silent fan (X2)
1. http://www.newegg.com/Product/Prodyct.aspx?Item= N82E16835185004

F. BlueRay Drive
1. http://www.newegg.com/Product/Prodyct.aspx?Item= N82E16827136133

G. Logitech diNovo Mini Keyboard/Mouse
1. http://www.newegg.com/Product/Prodyct.aspx?Item= N82E16823126039

H. 430W Power Supply
   1. http://www.newegg.com/Product/Prodyct.aspx?Item= N82E16817151057

I. 4GB DDR2 RAM
   1. http://www.newegg.com/Product/Prodyct.aspx?Item= N82E16820231122

J. Solid State Hard Drive
   1. http://www.newegg.com/Product/Prodyct.aspx?Item= N82E16820231221

K. Hard Drive Adapter
   1. http://www.newegg.com/Product/Prodyct.aspx?Item= N82E16817994064

L. AnyDVD Software
   1. http://www.slysoft.com/en/anydvdhd.html

M. MyMovies Software
   1. http://www.mymovies.dk/

N. AreSoft Blu-Ray Player Software
   1. TMT3P
   2. http://www.arcsoft.com/estore/software_title.asp?ProductCode=TMT3P

O. HP Mediasmart Home Server
   1. http://www.newegg.com/Product/Product.aspx?Item=N82E16859105421

P. Trendnet Wireless Router
   1. http://www.newegg.com/Product/Product.aspx?Item=N82E16833122152

Q. Power over Ethernet switch
   1. http://www.newegg.com/Product/Product.aspx?Item=N82E16833122152

R. Serial device

S. Serial cablea

2.3 QUALITY ASSURANCE

PART 3 - EXECUTION

3.1 DELIVERY, STORAGE & HANDLING

A. Store product in manufacturer's unopened packaging until ready for installation.

END OF SECTION 11 28 13

SECTION 11 31 13 – RESIDENTIAL KITCHEN APPLIANCES

PART 1 - GENERAL

1.1 SUMMARY

A. Submittals: Product data, warranty information, construction drawings

B. Related Sections

1. Section 11 26 00 Kitchen Unit

1.2 SYSTEM DESCRIPTION

A. These appliances will be used for the both the appliance and entertainment portion of the contest. The dishwasher will need to perform one cycle uninterrupted and reach a peak temperature of 120°F or 48.9°C. The stovetop and oven will need to complete the dining and cooking contests which include preparing two meals and evaporating five pounds of water.

PART 2 - PRODUCTS

2.1 MANUFACTURERS

A. Whirlpool Corporation, 2000 N. M-63 Benton Harbor, MI 49022-2692; tel: (269) 923-5000

B. Diva de Provence, 207-885 Don Mills Rd. Toronto, ON, Canada M3C 1V9 ; tel: (416) 256-2646; fax: (416) 256-7121

2.2 PRODUCTS

A. DISHWASHER
1. A mid-sized dishwasher: Whirlpool's most efficient dishwasher ever features the eco-friendly ResourceSaver™ wash system and recognition from the Department of Energy Consortium for energy efficiency.
2. GU3600XTVY
3. http://www.whirlpool.com/catalog/product.jsp?src=DISHWASHERS&cat=108&prod=1329

B. OVEN
1. Whirlpool built-in wall oven: It cooks 30% faster than traditional Whirlpool brand thermal-bake ovens with a new convection cooking system with faster circulation and a new temperature management system.
2. GBS279PVS
3. http://www.whirlpool.com/catalog/product.jsp?src=BUILTIN+OVENS&cat=83&prod=1284

C. STOVETOP

1. Diva induction cooktop: Its 2 burner design makes it the perfect component stovetop. Using induction technology, it output with an efficiency of over 90%, compared to 50% for gas or even 60% for other electric technologies; Proven to heats faster also,
2. DDP-2 12
3. http://www.divainduction.com/products.php?product=1

D. REFRIGERATOR
1. The unique design of Liebherr's freestanding models feature fully stainless steel doors, and even stainless steel side walls. Practical lever handles with integrated opening mechanisms. 9.2 cu ft refrigerator capacity; 3.1 cu ft freezer capacity.
2. CS 1301
3. http://www.liebherr-appliances.com/resource_center/manuals/freestanding.html

2.3 QUALITY ASSURANCE

A. Installer should be experienced in performing work of this section and some specialization in installation of work similar to that required for this project. Use two or more people to move and install dishwasher and oven.

B. Compatibility: Any components or parts used for replacement of repair should be from appliance manufacture to ensure compatibility.

PART 3 - EXECUTION

3.1 DELIVERY, STORAGE & HANDLING

A. Order: The Diva stovetop should be ordered from local retailer to ensure electric compatibility.

B. Delivery: Shipping time is the number of business days (Monday-Friday) it takes a product to reach you from the date it is shipped from the warehouse. The shipping time should be added to the number of days estimated for product availability. Ground shipping times vary from one to five business days depending on the proximity of your shipping address to the given warehouse stocking your ordered product. Deliveries are not made on weekends or holidays. Business days are Monday through Friday.

3.2 INSTALLATION

A. Instructions and special considerations for installation process.
1. DISHWASHER
   a. Always use a new drain hose even when installing a new replacement dishwasher.
   b. With another person holding the dishwasher to prevent it from tipping, open and close the door a few times. If the door closes or falls open under its own weight, the door tension will need to be adjusted.
   c. Slowly move dishwasher completely into cabinet opening. Align front of dishwasher door panel with cabinet doors,
   d. Slowly move dishwasher completely into cabinet opening. Align front of dishwasher door panel with cabinet doors.
   e. Connect to drain. Place the smaller drain hose clamp onto the small end of the drain hose and push the drain hose into the connector up to the stop on the drain hose.

f. Connect power or plug in dishwasher.

2. OVEN
   a. Cabinet opening dimensions that are shown must be used. Given dimensions provide minimum clearance with oven.
   b. Oven must be connected to the proper electrical voltage and frequency as specified on the model/serial number rating plate; a circuit breaker is recommended.
   c. Remove the shipping materials, tape, hardware package, racks, and other parts from the oven. Move oven and cardboard close to the oven's final location.
   d. Install a UL listed or CSA approved conduit connector to the junction box. Route the flexible conduit from the oven to the junction box through a UL listed or CSA approved conduit connector.
   e. Using 2 or more people, lift oven partially into cabinet cutout and use the oven opening as an area to grip. Push against seal area of front frame to push oven into cabinet until shipping feet almost contact cabinet. Securely fasten oven to cabinet using the # 8–14 x 1" screws (2 for single oven, 4 for double oven) provided.

3. STOVETOP
   a. The cooktop is to be connected to the electrical power supply and properly grounded.
   b. The unit must be properly placed under a ventilation hood or a downdraft ventilation system in a completely horizontal orientation.

END OF SECTION 11 31 13

SECTION 11 31 23 – RESIDENTIAL LAUNDRY APPLIANCES

PART 1 - GENERAL

1.1 SUMMARY

A. Submittals: Product data

1.2 SYSTEM DESCRIPTION

A. As stipulated in Decathlon rules, all houses are mandated to perform monitored laundry cycles. These appliances will be used in the completion of this task.

B. Performance Requirements: During a laundry cycle, the peak temperature of the water within the washer must reach 110°F (43.3°C), while the dryer must dry its load completely. Dryness is measure by assessing the weight of load immediately after a cycle in comparison to its unwashed weight. The laundry cycle must be uninterrupted.

PART 2 - PRODUCTS

2.1 WHIRLPOOL

A. Whirlpool , 2000 N. M-63 Benton Harbor, MI 49022-2692; telephone: (269) 923-5000; website: www.whirlpool.com

B. AUTOMATIC WASHER
1. Whirlpool's compact washing machine: This front loaded washer can be placed beneath the compact dryer to conserve every inch of floor space Its 2.3 cu. ft. I.E.C. capacity provides plenty of room for your laundry and ENERGY STAR® qualification saves water and energy.
2. WFC7500VW
3. http://www.whirlpool.com/catalog/product.jsp?src=WASHERS&cat=115&prod=1420

C. AUTOMATIC DRYER
1. Whirlpool's compact clothes dryer: This compact dryer can be stacked on top of the compact washer to conserve floor space. Its 3.8 cu. ft. capacity offers plenty of room and Moisture Sensor Control sensors to prevent overdrying by automatically turning off the cycle when clothes are dry.
2. WED7500VW
3. http://www.whirlpool.com/catalog/product.jsp?categoryId=119&productId=1413&successful_search=WED7500VW

2.2 QUALITY ASSURANCE

A. Installer Qualifications: Use two or more people to move and install washer and dryer.

B. Compatibility :All washer and dryer accessories are recommended to be manufactured by Whirlpool to ensure compatibility.

PART 3 - EXECUTION

3.1 DELIVERY, STORAGE & HANDLING

A. Shipping time is the number of business days (Monday-Friday) it takes a product to reach you from the date it is shipped from the warehouse. The shipping time should be added to the number of days estimated for product availability. Ground shipping times vary from one to five business days depending on the proximity of your shipping address to the given warehouse stocking your ordered product. Deliveries are not made on weekends or holidays. Business days are Monday through Friday.

B. Cleaning: Open the washer door and remove any clothing or items from the washer. Inspect the gray colored seal/bellow between the door opening and the basket for stained areas. Pull back the seal/ bellow to inspect all areas under the seal/bellow and to check for foreign objects. If stained areas are found, wipe down these areas of the seal/bellow with a cloth that is damp with a dilute solution of water and chlorine bleach (a solution of 1 gal of water per ¾ cup of bleach).

3.2 INSTALLATION

A. The location must be large enough to allow the washer and dryer door to be fully opened.

B. Additional spacing should be considered for ease of installation and servicing. The door opens more than 90°, and it is not reversible.

C. Additional clearances might be required for wall, door, floor, and ceiling moldings.

D. Additional spacing of 1" (2.5 cm) on all sides of the washer and dryer is recommended to reduce noise transfer.

E. Companion appliance spacing should also be considered.

F. For cabinet installation, with a door, the minimum ventilation openings in the Determine vent length and elbows needed for best drying performance top are required.

END OF SECTION 11 31 23

SECTION 11 52 00 – AUDIO-VISUAL EQUIPMENT

PART 1 - GENERAL

1.1 SUMMARY

A. Submittals: Product data

B. Related Sections

1. Section 11 28 13 Computers

1.2 SYSTEM DESCRIPTION

A. The custom-built computer shall manage the home entertainment system including speakers and television. As per competition requirements, a movie shall be played for guests on the entertainment system.

PART 2 - PRODUCTS

2.1 MANUFACTURER

A. Polk Audio, 5601 Metro Drive, Baltimore MD 21215; tel: (410) 358-3600

B. Samsung Electronics America, Inc., 105 Challenger Road, Ridgefield Park, NJ 07660-0511; tel: (201) 229-4000

2.2 MATERIALS

A. In-room speakers
1. RC 55i
2. http://www.polkaudio.com/downloads/manuals/home/RCiManual.pdf

B. Speaker Bar
1. HT-WSIG
2. http://www.samsung.com/us/system/consumer/product/2009/04/25/ht_ws1gxaa/HT-WS1G-final-031809.pdf

C. 46” LED High Definition Television with 1080p resolution
1. UN46B6000
2. http://www.samsung.com/us/system/consumer/product/2009/04/17/un46b6000vfxza/UN46B6000-FINAL-041609-R6.pdf

D. Mounting Bracket for television

2.3 QUALITY ASSURANCE

A. Examine electronics immediately after removal from manufacturer's packaging. Report damaged or missing components directly to the manufacturer.

PART 3 - EXECUTION

3.1 DELIVERY, STORAGE & HANDLING

A. Store products in manufacturer's unopened packaging until ready for installation.

3.2 INSTALLATION

A. Installation shall follow manufacturer's instructions.

END OF SECTION 11 52 00

SECTION 12 24 13 – ROLLER WINDOW SHADES

PART 1 - GENERAL

1.1 SUMMARY

A. Submittals: Product data, construction drawings

B. Related Sections

1. Section 12 25 00 Window Treatment Operating Hardware

1.2 SYSTEM DESCRIPTION

A. Mechanically controlled roller shades shall serve as window treatments. Automated controls will be able to remotely adjust shading to manage interior climate and daylighting.

PART 2 - PRODUCTS

2.1 MANUFACTURER

A. Total Window, Inc., 1855 Griffin Rd., Ste B486, Dania Beach, FL 22004; tel: (954) 921-0109; fax: (954) 921-0302

2.2 MATERIALS

A. Roller 4x4 Fascia
1. http://totalwindow.com/techpages/4x4 Fascia.pdf

2.3 QUALITY ASSURANCE

A. Products shall be examined after removal from manufacturer's packaging. Any damaged or missing components should be reported directly to the manufacturer.

PART 3 - EXECUTION

3.1 DELIVERY, STORAGE & HANDLING

A. Window shades may be removed from the house prior to transport.

END OF SECTION 12 24 13

SECTION 12 25 00 – WINDOW TREATMENT OPERATING HARDWARE

PART 1 - GENERAL

1.1 SUMMARY

A. Submittals: Product data, electrical construction drawings and diagrams

B. Related Sections

1. Section 12 24 12 Roller Window Shades

1.2 SYSTEM DESCRIPTION

A. Mechanical controls equipment shall operate window treatment.

PART 2 - PRODUCTS

2.1 MANUFACTURER

A. Total Window, Inc., 1855 Griffin Rd., Ste B486, Dania Beach, FL 22004; tel: (954) 921-0109; fax: (954) 921-0302

B. MATERIALS
1. Somfy URTSII controller
2. http://www.av-outlet.com/images/shade/1810872-ins.pdf
3. Somfy Power Distribution Panel
4. http://www.vasawindowcoverings.com/pdfs/architects corner/Power_Panel_Instructions.pdf
5. Mean-Well DRP-240 Power Supply
6. http://www.meanwell.com/search/drp-240/drp-240-spec.pdf
7. USB-Serial Adapter, Smart Home Item #: 9738
8. http://www.smarthome.com/9738/USB-to-Serial-Adapter/p.aspx
9. Serial Cable, Smart Home Item #: 12836D
10. http://www.smarthome.com/12836D/M1-Cable-to-DB9-Serial-Ribbon-Cable-W040A/p.aspx

2.2 QUALITY ASSURANCE

A. Products shall be examined after removal from manufacturer's packaging. Any damaged or missing components should be reported directly to the manufacturer.

PART 3 - EXECUTION

3.1 INSTALLATION

A. Controls shall be installed in accordance with manufacturer's instructions.

END OF SECTION 12 25 00

SECTION 12 40 00 – FURNISHINGS AND ACCESORIES

PART 1 - GENERAL

1.1 SUMMARY

A. Submittals: Product data

1.2 SYSTEM DESCRIPTION

A. Furnishings and accessories shall be purchased for use in the house during competition. Some items may be loaned for short-term use. Other products may be reclaimed/antiques to support aesthetic intentions.

PART 2 - PRODUCTS

2.1 MANUFACTURERS

A. Cisco Brothers, Corp., 1933 W. 60th St., Los Angeles, CA 90047; tel: (323) 778-8612; fax: (323) 778-9073

B. Uhuru Design, 160 Van Brunt St., 3rd Fl, Brooklyn, NY 11231; tel: (718) 855-6519; fax: (718) 855-8082; email: info@uhurudesign.com

C. White Lotus, 431 Raritan Avenue, Highland Park, NJ 08904; tel: (732) 828-2111; fax (732) 828-4159

D. LOOP; website: http://shop.looporganic.com/main.sc

E. The Green Glass Company, 5801 Stella Ave., Weston, WI 54476; tel: (715) 355-1897; fax: (715) 355-1697

F. CB2, 1860 West Jefferson Ave., Naperville, IL 60540; tel: (800) 606-6252

2.2 MATERIALS

A. Bar Stools may be custom fabricated by designer and fabricator of Kitchen Unit, or may be procured from approved manufacturer. Ideal stool product are specified here.
   1. Cisco Brothers TIlo Stools - Item TIL-STL-000
   2. http://www.ciscohome.net/product/Tilo-Stool,4949.aspx
   3. Uhuru Design Puzzle Stool
   4. http://www.uhurudesign.com/work_pag.php?p=4&s=46&t=35&w=65

B. ACCESSORIES
   1. 24x24 Kapok Pillows
   2. http://www.whitelotus.net/ProductDetail-99.html
   3. LOOP Full size sheets, flat and fitted

4. http://shop.looporganic.com/product.sc;jsessionid=1F8B0C07D2D7BA0D1D923375E63F61F9.qscstrfrnt01?categoryId=10&productId=95
5. Assorted Clear Pop Glasses
6. http://www.greenglass.com/store/product.php?productid=110&cat=10&page=1
7. CB2 Blanca Dinnerware
8. http://www.cb2.com/family.aspx?c=222&f=4808
9. LOOP Towels
10. http://shop.looporganic.com/product.sc;jsessionid=1F8B0C07D2D7BA0D1D923375E63F61F9.qscstrfrnt01?categoryId=42&productId=106

2.3 QUALITY ASSURANCE

A. Products shall be examined after removal from manufacturer's packaging. Any damaged or missing components should be reported directly to the manufacturer.

PART 3 - EXECUTION

3.1 DELIVERY, STORAGE & HANDLING

A. Furnishing and Accessories shall be removed from the house prior to transport.

END OF SECTION 12 40 00

SECTION 12 58 13 – COUCHES AND LOVE SEATS

PART 1 - GENERAL

1.1 SUMMARY

A. Submittals: Product data

1.2 SYSTEM DESCRIPTION

A. Living room chairs shall be purchased for use in the house during competition. Items may be loaned for short-term use.

PART 2 - PRODUCTS

2.1 MANUFACTURERS

A. Uhuru Design, 160 Van Brunt St., 3rd Fl, Brooklyn, NY 11231; tel: (718) 855-6519; fax: (718) 855-8082; email: info@uhurudesign.com

B. Cisco Brothers, Corp., 1933 W. 60th St., Los Angeles, CA 90047; tel: (323) 778-8612; fax: (323) 778-9073

2.2 PRODUCTS

A. Living Room chairs may be one of the following or similar products:
1. Uhuru Bilge Chairs
2. http://www.uhurudesign.com/work_pag.php?w=70
3. Uhuru DK Lounge Chairs
4. http://www.uhurudesign.com/work_pag.php?p=4&s=46&t=35&w=25
5. Cisco Brothers Gretta Chairs, Item GRT-CHR-00
6. http://www.ciscohome.net/product/Gretta-Sofa,4941.aspx

2.3 QUALITY ASSURANCE

A. Products shall be examined after removal from manufacturer's packaging. Any damaged or missing components should be reported directly to the manufacturer.

PART 3 - EXECUTION

3.1 DELIVERY, STORAGE & HANDLING

A. Living room seats shall be removed from the house prior to transport.

END OF SECTION 12 58 13

SECTION 12 58 14 – MATTRESS

PART 1 - GENERAL

1.1 SUMMARY

A. Submittals: Product data

B. Related Sections

1. Section 12 58 29 Beds

1.2 SYSTEM DESCRIPTION

A. The Mattress shall sit within the bed frame. When bed is elevated, mattress will not be seen.

PART 2 - PRODUCTS

2.1 MANUFACTURER

A. WJ Southard, 6361 Thompson Road, Syracuse NY 13206

B. MATERIALS
1. Full-size Van Patten Mattress
2. http://www.wjsouthard.com/products/product_vanpatten.html

2.2 QUALITY ASSURANCE

A. Product shall be examined after removal from manufacturer's packaging. Any damaged should be reported directly to the manufacturer.

PART 3 - EXECUTION

3.1 DELIVERY, STORAGE & HANDLING

A. Mattress shall be removed from the house prior to transport.

END OF SECTION 12 58 14

SECTION 12 58 29 - BEDS

PART 1 - GENERAL

1.1 SUMMARY

A. Submittals: Hardware product data, shop drawings

B. Related Sections

1. 12 58 14 Mattress

1.2 SYSTEM DESCRIPTION

A. The custom-designed and fabricated bed shall be liftable to provide more floor and storage space in the bedroom. The bed shall be counterweighted and will rise into a concealing soffit built in the ceiling with minor effort by user. Built-in features will ensure safety.

PART 2 - PRODUCTS

2.1 MANUFACTURERS

A. Benn Colker, 505 Wyckoff Rd., Ithaca NY 14850

B. SKF Motion Technologies, 1530 Valley Center Parkway, Suite 180, Bethlehem, PA 18017; tel: (610) 861-3700; fax: (610) 861-3716; email: motiontech.usa@skf.com

C. Samson Rope Technologies, Inc., 2090 Thornton Street, Ferndale, WA 98248; tel: (360) 384-4669

D. Harken Yacht Equipment, E-Commerce Department, 1251 East Wisconsin Avenue, Pewaukee, WI 53072; tel: (262)691-3320; email: technicalservice@harken.com

2.2 MATERIALS

A. Bed Frame + platform
   1. 1” square steel tubing + Beech wood

B. Counterweight
   1. 8” Hot-rolled steel billet

C. Accessories + hardware
   1. Harken 132 Big Bullet Cheek Block
      Harken 222 Big Bullet Upright Lead
   2. Profile rail guidelines, LLRHS 45 LU
      http://www.harkenstore.com/uniface.urd/scpdinw1.ShowProd?B4RPMEB9Y8V524
      http://www.harkenstore.com/uniface.urd/scpdinw1.ShowProd?B4RPMEB9Y98HFK

D. 3/8” Tenex Rope
   1. http://www.samsonrope.com/index.cfm?ind=9&app=10&rope=174&inst=1

PART 3 - EXECUTION

3.1 INSTALLATION

A. Bed shall be installed with house construction on site in Ithaca with detachable counterweight to be removed for transportation.

END OF SECTION 12 58 29

SECTION 13 34 00 - FABRICATED ENGINEERING STUCTURES

PART 1 - GENERAL

1.1 SUMMARY

A. Related Sections

1. 06 15 01.E Wood Decking

1.2 SYSTEM DESCRIPTION

A. Universal System Scaffold to be used in the landscape to give height to the potted plants.

B. Performance Requirements:
1. Testing Agency Qualifications: An independent testing agency, acceptable to authorities having jurisdiction, with the experience and capability to conduct the testing indicated.

PART 2 - PRODUCTS

2.1 MANUFACTURER

A. Universal Manufacturing Corp. P.O. Box 220 550 West New Castle Street Zelienople, PA 16063; telephone: (724) 452-8300; email: info@universalscaffold.com

2.2 MATERIALS

A. Rosette and female adaptor welded together for overall length of 1’-1”.
1. PART NUMBER: UBC
2. http://www.universalscaffold.com/scaffold_products.htm

B. Metal base plate and male fitting.
1. PART NUMBER: UBP

C. Rosette and 1’-5 1/8” scaffolding tube.
1. PART NUMBER: US 17 T

D. Metal base plate welded to threaded male scaffolding tube. Height of 2’ with swivel thread to adjust height and level scaffolding system.
1. PART NUMBER: USJ20

E. Horizontal scaffolding support brace 1’-10 3/32” long.
1. PART NUMBER: UH20

F. Horizontal scaffolding support brace 3’-10 3/32” long.
1. PART NUMBER: UH40

G. Horizontal scaffolding support brace 5’-10 3/32” long.
1. PART NUMBER: UH60

H. Horizontal scaffolding support brace 7'-10 3/32" long.
   1. PART NUMBER: UH80

I. Offset steel plank to be used to span distances between scaffolding tubing. The dimensions of the planks are 2' by 9".
   1. PART NUMBER: USP 20

J. Offset steel plank to be used to span distances between scaffolding tubing. The dimensions of the planks are 4' by 9".
   1. PART NUMBER: USP 40

K. Rosette to be welded on to the custom USJ20 and US17T to acquire desired heights of scaffolding off the ground.
   1. PART NUMBER: Rosette

L. ACCESSORIES
   1. #14 x 1/2" In wood screw flat head
   2. Store SKU# 726880
   3. http://www.homedepot.com/webapp/wcs/stores/servlet/ProductDisplay?storeId=10051&langId=-1&catalogId=10053&productId=100128524

2.3 QUALITY ASSURANCE

A. Installer Qualifications: Installer should be experienced in performing work of this section and should have specialized in installation of work similar to that required for this project.

2.4 REGULATORY REQUIREMENTS

A. Scaffolding should be rented or bought from distributor certified by Universal Manufacturing and should have minimal signs of rust or other wear and tear.

PART 3 - EXECUTION

3.1 DELIVERY, STORAGE & HANDLING

A. Comply with manufacturer's ordering instructions and lead time requirements to avoid construction delays.)

B. Deliver materials from rental company and stored in a location to avoid damage from construction activities.

3.2 INSTALLATION

A. Scaffolding shall be installed as to manufactures specifications.

B. Each scaffolding base plate should be mounted to a 6"x 6" plywood base as specified in 06 15 01.E and mounted with ½" wood screw.

END OF SECTION 13 34 00

SECTION 22 05 00 – COMMON WORK RESULTS FOR PLUMBING

PART 1 - GENERAL

1.1 SUMMARY

A. Submittals: Product Data, construction drawings

1.2 SYSTEM DESCRIPTION

A. Hangars, hangar accessories, fasteners, anchors, pressure gages, and other accessories for the installation of plumbing piping and equipment shall be obtained from local hardware supplier and installed throughout house.

PART 2 - PRODUCTS

2.1 SUPPLIER

A. Acceptable supplier: Home Depot, 298 Elmira Rd, Ithaca 14850; tel: (607) 272-1093

2.2 PRODUCTS

A. HANGERS AND SUPPORTS
   1. Hanger Sizes: Same as piping unless otherwise indicated.
   2. 301CT - Copper Tubing Split Ring Extension Hanger
      a. Size Range — 1/2" thru 2" copper tubing
      b. Material — Malleable Iron
      c. Function — A rigid support to suspend tubing horizontally or vertically
      d. Approvals — Conforms to Federal Specification
      e. WW-H-171E, Type 25 and Manufacturers Standardization
      f. Society SP-69, Type 12.
      g. Finish — Epoxy Copper Tec™ Plated
   3. 203 - Adjustable PVC Coated Ring Hanger
      a. Size Range — 1/2" thru 8" pipe
      b. Material — Pre-Galvanized Steel
      c. Function — PVC coated for protection of glass, plastic or stainless steel pipe.
      d. Approvals — Conforms to Federal Specification
      e. WW-H-171E, Type 10, 1/2" thru 8", and Manufacturers
      f. Standardization Society SP-69, Type 10
      g. Maximum Temperature — 275°F
         Finish — Pre-Galvanized then PVC coated
   4. Standard Hex Nut
      a. Size Range — ¼” thru 11/2”
      b. Material – Carbon Steel
   5. Standard Hex Nut
   6. Hanger and Pipe Attachments: Factory fabricated with galvanized coatings; nonmetallic coated for hangers in direct contact with copper tubing.

7. Powder-Actuated Fasteners: Threaded-steel stud, with pull-out and shear capacities appropriate for supported loads and building materials where used.
8. Mechanical-Expansion Anchors: Insert-wedge-type, [zinc-coated] [stainless] steel, with pull-out and shear capacities appropriate for supported loads and building materials where used.

B. PRESSURE GAUGES
1. Pressure Gauges: Direct-mounting, indicating-dial type complying with ASME B40.100. Dry metal case, minimum 2-1/2-inch diameter with red pointer on white face, and plastic window. Minimum accuracy 3 percent of middle half of range. Range two times operating pressure.

PART 3 - EXECUTION

3.1 GENERAL PIPING INSTALLATIONS

A. Install piping free of sags and bends.

B. Install fittings for changes in direction and branch connections.

C. Comply with requirements in Division 07 Section "Penetration Firestopping" for sealing pipe penetrations in fire-rated construction.

D. Install unions at final connection to each piece of equipment.

3.2 GENERAL EQUIPMENT INSTALLATIONS

A. Install equipment to allow maximum possible headroom unless specific mounting heights are not indicated.

B. Install equipment level and plumb, parallel and perpendicular to other building systems and components, unless otherwise indicated.

C. Install mechanical equipment to facilitate service, maintenance, and repair or replacement of components. Connect equipment for ease of disconnecting, with minimum interference to other installations. Extend grease fittings to accessible locations.

D. Install equipment to allow right of way for piping installed at required slope.

END OF SECTION 22 05 00

SECTION 22 05 16 - EXPANSION FITTINGS AND LOOPS FOR PLUMBING PIPING

PART 1 - GENERAL

1.1 SUMMARY

A. Submittals: Product data

B. Related Sections

1. Section 22 01 10 – Operation and Maintenance of Plumbing Piping and Pumps

2. Section 23 56 13.19 – Heating Solar Vacuum-Tube Collectors

1.2 SYSTEM DESCRIPTION

A. The expansion tank serves as a means to store any excess fluid in the system. The reason for this excess fluid is thermal expansion, and without a expansion tank to increase storage space the fluid presents a danger to the system.

B. Performance Requirements: The HFT-30 Bell and Gossett Expansion tank is sized at 4.4 gallons and expected to have an acceptance volume of 2.5 gallons. Its maximum design pressure is at 100 psi and its maximum temperature at 240° F.

PART 2 - PRODUCTS

2.1 MANUFACTURER

A. Bell & Gossett: 8200 North Austin Avenue, Morton Grove, IL 60053; tel: (847) 966-3700

B. Local Rep: Frank P. Langley Co. Inc.: 219 Creekside Drive PO Box 744 Amherst, NY 14228; tel: 716-691-7575

C. MATERIALS
1. Series HFT diaphragm-type expansion tanks are pre-charged to 12 psi. They are designed to absorb the force of thermal expansion when heating fluid and to maintain proper pressurization in a closed hydronic system. The heavy-duty butyl diaphragm separates system water from the air thereby preventing water-logging problems.
2. Product #: HFT-30
3. http://www.bellgossett.com/literature/files/159.pdf

D. ACCESSORIES
1. The expansion tank shall come with a .302”-32 charging valve connection to facilitate on site charging of the tank to meet system requirements.

2.2 REGULATORY REQUIREMENTS

A. The goal of the expansion tank is to ensure that thermally expanded fluid has a place to go and will accept this additionally fluid until its maximum acceptance volume.

PART 3 - EXECUTION

3.1 INSTALLATION

A. The expansion tank should be placed directly at the end of the loop next to the pump with the fluid being pumped away from the expansion tank. This is called the “point of no pressure change.” This is done because the expansion tank has a fixed pressure and needs to be at a point entirely unaffected by the pressure buildup of the pump. This ensures that a partial vacuum does not form at the inlet of the pump, allowing air to leak into the system.

END OF SECTION 22 05 16

SECTION 22 05 33 – GENERAL-DUTY VALVES FOR PLUMBING PIPING

PART 1 - GENERAL

1.1 SUMMARY

A. Submittals: Product data, construction drawings

B. Related Sections

1. Section 22 11 16 Domestic Water Piping

1.2 SYSTEM DESCRIPTION

A. The CB- ¾ S balance valve will be used to ensure that pressure is maintained across the pump loop. It will help lower the energy required by the pump and keep the loop operating at its optimal level.

B. Performance Requirements: The balance valve can withstand pressures up to 200 psi and can operate at temperatures under 250ºF (121ºC)

PART 2 - PRODUCTS

2.1 MANUFACTURER

A. Bell & Gossett / Domestic Pump, 8200 N. Austin Ave. Morton Grove, IL 60052; tel: (847) 966-3700; fax: (847) 966-9052

B. MATERIALS
1. The body of the balance valve will be bronze with a brass ball. It will be 3-1/2” x 2-1/4” x 2-3/4” and will weight 1-1/4 lbs
2. Model #: 117413
3. http://www.bellgossett.com/literature/files/189.pdf

2.2 QUALITY ASSURANCE

A. Permanent valve accuracy is assured by Bell & Gossett

PART 3 - EXECUTION

3.1 DELIVERY, STORAGE & HANDLING

A. Lead Time: 2-3 days from Frank P. Langely Co.

3.2 INSTALLATION

A. Installation should follow manufacturer's installation manual.

B. Not recommended for use with meter connections pointing downward.

END OF SECTION 22 05 23

SECTION 22 05 76 - FACILITY DRAINAGE PIPING CLEANOUTS

PART 1 - GENERAL

1.1 SUMMARY

A. Submittals: Product data, construction drawings

B. Related Sections

1. Section 22 01 00 – Operation and Maintenance of Plumbing Piping and Pumps

1.2 SYSTEM DESCRIPTION

A. A cleanout is a fitting with a removable plug found in waste system lines that are used to clean out debris.

B. Cleanouts are required to be accessible in order to easily clean out clogs and debris from the waste system.

PART 2 - PRODUCTS

2.1 MANUFACTURER

A. Nibco Inc., 1516 Middlebury Street, Elkhart, In 46516-4740; tel: (888) 446-4226; fax: (888) 336-4226.

B. MATERIALS
1. Cleanout fitting
2. PVC DWV 4803-2 Cleanouts Adapter
3. http://www.nibco.com/assets/PDWV0608.pdf

C. ACCESSORIES
1. Copper Boiler Drain
2. 74-CL
3. http://www.nibco.com/assets/727374PV.pdf

PART 3 - EXECUTION

3.1 DELIVERY, STORAGE & HANDLING

A. Comply with plumbing fittings distributor's ordering instructions and lead time requirements to avoid construction delays.

B. Deliver materials from plumbing fittings distributor with identification labels or markings intact.

3.2 INSTALLATION

A. The cleanout will be accessible at all times.

B. There shall be 12” of clearance in front of the cleanout.

C. Cleanouts will be installed for the greywater drainage lines as well as the blackwater drainage lines.

D. Cleanouts will be installed at a wye intersection.

E. Installation of drain cleanouts will be inspected by a certified building inspector.

END OF SECTION 22 05 76

SECTION 22 07 19 – PLUMBING PIPING INSULATION

PART 1 - GENERAL

1.1 SUMMARY

A. Submittals: Product data, shop drawings, product samples

B. Related Sections

1. Section 22 11 16 Domestic Water Piping

1.2 SYSTEM DESCRIPTION

A. All copper plumbing piping shall be insulated with a preformed fiber glass pipe insulation.

B. Performance Requirements: Thermal conductivity per ASTM C 518; Rated 25/50 per ASTM E84 and NFPA 255

PART 2 - PRODUCTS

2.1 MANUFACTURER

A. JonsManville, 717 17th St., Denver CO 80202; tel: (800) 654-3103; fax: (800) 978-2318

B. MATERIALS
1. Micro-Lok HP High performance fiber glass insulation made from rotary glass fibers with a thermosetting resin and produced in 36” lengths
2. http://www.specjm.com/files/pdf/CI-228_IoFINAL.pdf

C. ACCESSORIES
1. Connections shall be made with color-matching vinyl adhesive tape.

PART 3 - EXECUTION

3.1 DELIVERY, STORAGE & HANDLING

A. Material must be stored between 15°F and 130°F for 24 hours before use.

3.2 INSTALLATION

A. General
1. All insulation to be installed by a licensed applicator and applied in accordance with the manufacturer’s recommendations.
2. All pipe insulation shall be continuous through wall and ceiling openings and sleeves, except where fire stop materials are required.

3. Insulation on all cold surfaces must be applied with a continuous, unbroken vapor seal. Hangers, supports, anchors, etc., that are secured directly to cold surfaces must be adequately insulated and vapor sealed to prevent condensation.
4. All surface finishes are to be extended to protect all surfaces, ends, and raw edges of insulation.

B. Indoor Piping: This portion of the installation procedure is applicable for piping in all indoor areas, including concealed spaces, mechanical rooms and inhabited areas.
   1. Performed fiber glass pipe insulation with all-service jacket shall be applied to piping with all joints tightly fitted to eliminate voids.
   2. When adhered, the lap and butt strips shall be smoothly secured according to manufacturer's recommendations.

END OF SECTION 22 07 19

SECTION 22 11 13.23 – DOMESTIC WATER PIPING – COPPER PIPE

PART 1 - GENERAL

1.1 SUMMARY

A. Submittals: Product data, construction drawings

B. Related Sections
1. 22 05 00 Common Work Results for Plumbing
2. 22 07 19 Plumbing Piping Insulation
3. 22 11 16 Domestic Water Piping
4. 22 11 16.01 Fittings and Connections

1.2 SYSTEM DESCRIPTION

A. Tubing in the house plumbing system shall be made of copper and PVC as specified in the drawing system.

B. Performance Requirements: Compliance with NSF 14 for plastic, potable domestic water piping and components; Compliane with NSF 61 for potable domestic water piping and components

PART 2 - PRODUCTS

2.1 MANUFACTURER

A. Nibco Inc., 1516 Middlebury Street, Elkhart, In 46516-4740; tel: (888) 446-4226; fax: (888) 336-4226.

B. Product data link for all components: http://www.nibco.com/assets/DURAPEXsubmittal.pdf

2.2 COPPER PIPES

A. Hard Copper Tubing: ASTM B 88, Types L water tube, drawn temper with wrought-copper, solder-joint fittings. Furnish wrought-copper fittings if indicated.

1. Copper Unions: Cast-copper-alloy, hexagonal-stock body, with ball-and-socket, metal-to-metal seating surfaces and solder-joint or threaded ends.
2. Joining Materials: Use ASTM B 813, water-flushable, lead-free flux; ASTM B 32, lead-free-alloy solder.

B. Soft Copper Tubing: ASTM B 88, Types L, water tube, annealed temper with copper pressure fittings, cast-copper-alloy or wrought-copper, solder-joint fittings. Furnish wrought-copper fittings if indicated.

1. Joining Materials: Use ASTM B 813, water-flushable, lead-free flux; ASTM B 32, lead-free-alloy solder.

PART 3 - EXECUTION

3.1 INSPECTION AND CLEANING

A. Inspect and test piping systems as follows:

1. Fill domestic water piping. Check components to determine that they are not air bound and that piping is full of water.
2. Test for leaks and defects in new piping and parts of existing piping that have been altered, extended, or repaired.

B. Clean and disinfect potable domestic water piping by filling system with water/chlorine solution with at least 50 ppm of chlorine. Isolate with valves and allow to stand for 24 hours. Flush system with clean, potable water until no chlorine is in water coming from system after the standing time.

3.2 INSTALLATION

A. Comply with requirements in Division 22 Section "Common Work Results for Plumbing" for basic piping installation requirements.

B. Install wall penetration system at each service pipe penetration through foundation wall. Make installation watertight. Comply with requirements in Division 22 Section "Common Work Results for Plumbing" for wall penetration systems.

C. Install shutoff valve, hose-end drain valve, strainer, pressure gage, and test tee with valve, inside the building at each domestic water service entrance. Comply with requirements in Division 22 Section "Common Work Results for Plumbing" for pressure gages and Division 22 Section "Domestic Water Piping Specialties" for drain valves and strainers.

D. Install domestic water piping with 0.25 percent slope downward toward drain for horizontal piping and plumb for vertical piping.

E. Comply with requirements in Division 22 Section "Common Work Results for Plumbing" for basic piping joint construction.

1. Soldered Joints: Comply with procedures in ASTM B 828 unless otherwise indicated.

F. Comply with requirements in Division 22 Section "Common Work Results for Plumbing" for pipe hanger and support devices.

G. Support vertical piping at each floor.

H. Install flexible connectors in suction and discharge piping connections to each domestic water pump.

3.3 PIPING SCHEDULE

A. Aboveground Distribution Piping: Type L, hard copper tubing, PEX piping.

3.4 VALVE SCHEDULE

A. Drawings indicate valve types to be used. Where specific valve types are not indicated, the following requirements apply:

1. Shutoff Duty: Use bronze ball or gate valves for piping NPS 2 and smaller. Use cast-iron butterfly or gate valves with flanged ends for piping NPS 2-1/2 and larger.
2. Throttling Duty: Use bronze ball or globe valves for piping NPS 2 and smaller. Use cast-iron butterfly valves with flanged ends for piping NPS 2-1/2 and larger.
3. Hot-Water-Piping, Balancing Duty: Memory-stop balancing valves.
4. Drain Duty: Hose-end drain valves.

B. Install gate or ball valves on inlet to each plumbing equipment item, on each supply to each plumbing fixture not having stops on supplies, and elsewhere as indicated.

C. Install drain valve at base of each riser, at low points of horizontal runs, and where required to drain water distribution piping system.

D. Install swing check valve on discharge side of each pump and elsewhere as indicated.

E. Install ball valves in each hot-water circulating loop and discharge side of each pump.

END OF SECTION 22 11 13.23

PART 1 - SECTION 22 11 13.74 – DOMESTIC WATER PIPING – PVC PIPE

1.1 SUMMARY

A. Submittals: Product data, construction drawings

B. Related Sections
1. 22 05 00 Common Work Results for Plumbing
2. 22 07 19 Plumbing Piping Insulation
3. 22 11 13.23 Facility Water Distribution Piping Copper
4. 22 11 16 Domestic Water Piping
5. 22 11 16.01 Fittings and Connections

1.2 SYSTEM DESCRIPTION

A. Tubing in the house plumbing system shall be made of copper and PVC as specified in the drawing system.

B. Performance Requirements: Compliance with NSF 14 for plastic, potable domestic water piping and components; Compliane with NSF 61 for potable domestic water piping and components

PART 2 - PRODUCTS

2.1 MANUFACTURER

A. Nibco Inc., 1516 Middlebury Street, Elkhart, In 46516-4740; tel: (888) 446-4226; fax: (888) 336-4226.

2.2 PIPE AND FITTINGS

A. PVC Pipe: ASTM D 1785, Schedule 40.

1. PVC Fittings: ASTM D 2466, Schedule 40, socket type.

2. http://www.nibco.com/assets/DURAPEXsubmittal.pdf

PART 3 - EXECUTION

3.1 INSPECTION AND CLEANING

A. Inspect and test piping systems as follows:

1. Fill domestic water piping. Check components to determine that they are not air bound and that piping is full of water.
2. Test for leaks and defects in new piping and parts of existing piping that have been altered, extended, or repaired.

B. Clean and disinfect potable domestic water piping by filling system with water/chlorine solution with at least 50 ppm of chlorine. Isolate with valves and allow to stand for 24 hours. Flush system with clean, potable water until no chlorine is in water coming from system after the standing time.

3.2 INSTALLATION

A. Comply with requirements in Division 22 Section "Common Work Results for Plumbing" for basic piping installation requirements.

B. Install wall penetration system at each service pipe penetration through foundation wall. Make installation watertight. Comply with requirements in Division 22 Section "Common Work Results for Plumbing" for wall penetration systems.

C. Install shutoff valve, hose-end drain valve, strainer, pressure gage, and test tee with valve, inside the building at each domestic water service entrance. Comply with requirements in Division 22 Section "Common Work Results for Plumbing" for pressure gages and Division 22 Section "Domestic Water Piping Specialties" for drain valves and strainers.

D. Install domestic water piping with 0.25 percent slope downward toward drain for horizontal piping and plumb for vertical piping.

E. Comply with requirements in Division 22 Section "Common Work Results for Plumbing" for basic piping joint construction.

1. Soldered Joints: Comply with procedures in ASTM B 828 unless otherwise indicated.

F. Comply with requirements in Division 22 Section "Common Work Results for Plumbing" for pipe hanger and support devices.

G. Support vertical piping at each floor.

H. Install flexible connectors in suction and discharge piping connections to each domestic water pump.

3.3 PIPING SCHEDULE

A. Aboveground Distribution Piping: Type L, hard copper tubing, PEX piping.

3.4 VALVE SCHEDULE

A. Drawings indicate valve types to be used. Where specific valve types are not indicated, the following requirements apply:

1. Shutoff Duty: Use bronze ball or gate valves for piping NPS 2 and smaller. Use cast-iron butterfly or gate valves with flanged ends for piping NPS 2-1/2 and larger.
2. Throttling Duty: Use bronze ball or globe valves for piping NPS 2 and smaller. Use cast-iron butterfly valves with flanged ends for piping NPS 2-1/2 and larger.
3. Hot-Water-Piping, Balancing Duty: Memory-stop balancing valves.
4. Drain Duty: Hose-end drain valves.

B. Install gate or ball valves on inlet to each plumbing equipment item, on each supply to each plumbing fixture not having stops on supplies, and elsewhere as indicated.

C. Install drain valve at base of each riser, at low points of horizontal runs, and where required to drain water distribution piping system.

D. Install swing check valve on discharge side of each pump and elsewhere as indicated.

E. Install ball valves in each hot-water circulating loop and discharge side of each pump.

END OF SECTION 22 11 13.74

SECTION 22 11 16 – DOMESTIC WATER PIPING

PART 1 - GENERAL

1.1 SUMMARY

A. Submittals: Product data, construction drawings

B. Related Sections
   1. 22 05 00 Common Work Results for Plumbing
   2. 22 07 19 Plumbing Piping Insulation
   3. 22 11 13.23 Facility Water Distribution Piping Copper
   4. 22 11 13.23 Facility Water Distribution Piping PVC
   5. 22 11 16.01 Fittings and Connections

1.2 SYSTEM DESCRIPTION

A. Tubing in the house plumbing system shall be made of copper and PVC as specified in the drawing system.

B. Performance Requirements: Compliance with NSF 14 for plastic, potable domestic water piping and components; Compliane with NSF 61 for potable domestic water piping and components

PART 2 - PRODUCTS

2.1 MANUFACTURER

A. Nibco Inc., 1516 Middlebury Street, Elkhart, In 46516-4740; tel: (888) 446-4226; fax: (888) 336-4226.

2.2 PIPE AND FITTINGS

A. PEX Tube and Fittings: ASTM F 877, SDR 9 PEX tubing and ASTM F 1807, metal insert-type fittings with copper or stainless-steel crimp rings.
   1. http://www.nibco.com/assets/DURAPEXsubmittal.pdf

PART 3 - EXECUTION

3.1 INSPECTION AND CLEANING

A. Inspect and test piping systems as follows:

   1. Fill domestic water piping. Check components to determine that they are not air bound and that piping is full of water.
   2. Test for leaks and defects in new piping and parts of existing piping that have been altered, extended, or repaired.

B. Clean and disinfect potable domestic water piping by filling system with water/chlorine solution with at least 50 ppm of chlorine. Isolate with valves and allow to stand for 24 hours. Flush system with clean, potable water until no chlorine is in water coming from system after the standing time.

3.2 INSTALLATION

A. Comply with requirements in Division 22 Section "Common Work Results for Plumbing" for basic piping installation requirements.

B. Install wall penetration system at each service pipe penetration through foundation wall. Make installation watertight. Comply with requirements in Division 22 Section "Common Work Results for Plumbing" for wall penetration systems.

C. Install shutoff valve, hose-end drain valve, strainer, pressure gage, and test tee with valve, inside the building at each domestic water service entrance. Comply with requirements in Division 22 Section "Common Work Results for Plumbing" for pressure gages and Division 22 Section "Domestic Water Piping Specialties" for drain valves and strainers.

D. Install domestic water piping with 0.25 percent slope downward toward drain for horizontal piping and plumb for vertical piping.

E. Comply with requirements in Division 22 Section "Common Work Results for Plumbing" for basic piping joint construction.

1. Soldered Joints: Comply with procedures in ASTM B 828 unless otherwise indicated.

F. Comply with requirements in Division 22 Section "Common Work Results for Plumbing" for pipe hanger and support devices.

G. Support vertical piping at each floor.

H. Install flexible connectors in suction and discharge piping connections to each domestic water pump.

3.3 PIPING SCHEDULE

A. Aboveground Distribution Piping: Type L, hard copper tubing, PEX piping.

3.4 VALVE SCHEDULE

A. Drawings indicate valve types to be used. Where specific valve types are not indicated, the following requirements apply:

1. Shutoff Duty: Use bronze ball or gate valves for piping NPS 2 and smaller. Use cast-iron butterfly or gate valves with flanged ends for piping NPS 2-1/2 and larger.
2. Throttling Duty: Use bronze ball or globe valves for piping NPS 2 and smaller. Use cast-iron butterfly valves with flanged ends for piping NPS 2-1/2 and larger.
3. Hot-Water-Piping, Balancing Duty: Memory-stop balancing valves.
4. Drain Duty: Hose-end drain valves.

B. Install gate or ball valves on inlet to each plumbing equipment item, on each supply to each plumbing fixture not having stops on supplies, and elsewhere as indicated.

C. Install drain valve at base of each riser, at low points of horizontal runs, and where required to drain water distribution piping system.

D. Install swing check valve on discharge side of each pump and elsewhere as indicated.

E. Install ball valves in each hot-water circulating loop and discharge side of each pump.

END OF SECTION 22 11 16

SECTION 22 11 16.01 – FITTINGS AND CONNECTIONS

PART 1 - GENERAL

1.1 SUMMARY

A. Submittals: Product data, construction drawings

B. Related Sections
   1. 22 05 00 Common Work Results for Plumbing
   2. 22 11 16 Domestic Water Piping

1.2 SYSTEM DESCRIPTION

A. Fittings and connections for plumbing system shall be installed with water piping components.

PART 2 - PRODUCTS

2.1 MANUFACTURER

A. Nibco Inc., 1516 Middlebury Street, Elkhart, In 46516-4740; tel: (888) 446-4226; fax: (888) 336-4226.

2.2 GENERAL-DUTY FITTINGS

A. 603 Adapter CxF; 604 Adapter CxM
   1. http://www.nibco.com/assets/WROT0509.pdf

B. 607 90° Close Rough Ell C x C; 4807 90° Ell - Hub x Hub; Brass PEX Insert Tees
   1. http://www.nibco.com/assets/PDWV0309.pdf

C. 600 Coupling CxC – Wrot (with stop); PVC DWV 4801 Coupling – Hub x Hub
   1. http://www.nibco.com/assets/coppercat.pdf

D. Cast copper Flange
   1. 741 Companion Flange 125# C
   2. http://www.nibco.com/assets/FLNG0509.pdf

END OF SECTION 22 11 16.01

SECTION 22 11 23 – DOMESTIC WATER PUMPS

PART 1 - GENERAL

1.1 SUMMARY

A. Submittals: Product data, construction drawings

B. Related Sections

1. Section 22 05 00 Common Work Results for Plumbing

1.2 SYSTEM DESCRIPTION

A. A wet rotor circulation pump will be used to transport water throughout the Solar Thermal system. It will be a residential, maintenance free, axial flanged, in-line, cast iron, wet rotor pump for hydronic heating systems.

B. Performance Requirements: the pump will be able to withstand working pressure of 150 psi and a maximum temperature of 225ºF (107ºC). Bell & Gossett offers a warranty for three years from the date of manufacture or 18 months from the date of installation (whichever comes first) against failure as a result of defects in materials or workmanship.

PART 2 - PRODUCTS

2.1 MANUFACTURERS

A. SHURflo, LLC, 5900 Katella Ave, Cyrpress, CA 90630; tel: (562) 795-5200; fax: (562) 795-7564; email: customer_service@shurflo.com

B. Bell & Gossett/Domestic Pump; 8200 N. Austin Ave. Morton Grove, IL 60052; tel: (847) 966-3700; fax: (847) 966-9052

C. Weiss Instruments, Inc., 905 Waverly Ave., Holtsville, NY 11742; tel: (631) 297-1200; fax: (613) 207-0900

2.2 MATERIALS

A. Pump
1. The pump body will be made out of cast iron and be able to withstand pressures up to 150 psi and temperatures up to 225ºF. It will be 6-3/8” x 6-7/8” x 5-3/4” and will weigh 13.1 pounds
2. Part #: 5900-0201
3. http://www.shurflo.com/pages/RV/rv_product_sum/rv_sum_docs/potable/5900-0201.html

B. Isolation Flange

1. The isolation flange is a combination of a full port isolation ball valve and a companion flange for circulators. The isolation flange allows easy service or replacement of the circulator without the need to drain the system.
2. Part #: 101221
3. http://www.bellgossett.com/productPages/Parts-Isolation-Flanges.asp

C. Pressure Gauge
1. Weiss 4 1/2" CTS/CTA Pressure Gauges are designed to meet the standard specifications for Heating, Cooling and Air Conditioning applications. The CTS has a stain-less steel case for stem mount and the CTA is an aluminum back flange case for either stem or surface mounting. Both versions conform with 1% ANSI-ASME B40.1 Grade 1A mid scale.
2. Product #: 4CTS-1
3. http://www.weissinstruments.com/presshvac.htm

2.3 QUALITY ASSURANCE

A. Underwriters Laboratories listed and cUL listed.

PART 3 - EXECUTION

3.1 INSTALLATION

A. All installation work shall follow manufacturer's installation manual.

B. The pressure gauge shall be installed before/after the pump within a short distance to accurately measure pressure within the system and ensure correct operating pressure is maintained.

END OF SECTION 22 11 23

SECTION 22 12 00 – POTABLE WATER STORAGE TANKS

PART 1 - GENERAL

1.1 SUMMARY

A. Submittals: Construction documents and product data

B. Related Sections

1. Section 22 11 13. 23 Domestic Water Piping

1.2 SYSTEM DESCRIPTION

A. Definition: The potable water tank will be used to store the water for the house during the competition.

B. Performance Requirements:
1. Testing Agency Qualifications: An independent testing agency, acceptable to authorities having jurisdiction, with the experience and capability to conduct the testing indicated, as documented according to potable water standards.

PART 2 - PRODUCTS

2.1 MANUFACTURER

A. Interstate Products, Inc; 3921 Sawyer Road Sarasota, FL 34233; Phone (800)- 474-7294; Fax (800) 448-6329.

B. MATERIALS
1. 500 Gallon Pillow loaf tank to be used to store the potable water during the competition.
2. RC-IPI-PWPT/500
3. http://www.interstateproducts.com/all_tanks.htm

2.2 QUALITY ASSURANCE

A. Installer Qualifications: Installer should be experienced in performing work of this section and should have specialized in installation of work similar to that required for this project.

2.3 REGULATORY REQUIREMENTS

A. Tank should be certified by necessary testing agents and should be tested for leaks before delivery.

PART 3 - EXECUTION

3.1 DELIVERY, STORAGE & HANDLING

A. Product should be ordered with enough lead time for proper testing with the plumbing system for the house.

B. Deliver materials from manufacture and store in clean dry place until installed with the house

3.2 INSTALLATION

A. Install tank in proper location drawn in construction documents and hook up to house according to plumbing plans.

END OF SECTION 22 12 00

SECTION 22 12 23 13 - FACILITY STEEL, INDOOR POTABLE-WATER STORAGE PRESSURE TANK

PART 1 - GENERAL

1.1 SUMMARY

A. Submittals: Product data, warranty information, construction drawings

B. Related Sections

1. Section 23 56 00.01 – Building Integrated Solar Thermal System

2. Section 23 56 13.19 – Heating Solar Vacuum-Tube Collectors

1.2 SYSTEM DESCRIPTION

A. The solar hot water tank will work together in conjunction with a cold water feed and heated water feed from the solar evacuated tube. Cold water will be supplied into the tank through a pipe that disperses the cold water at the bottom. This cold water will be heated as it rises by hot water from the evacuated tubes that flows through the tank via copper pipe coiled around the inside of the tank. The newly heated water leaves via the top of the tank.

B. Performance Requirements: The heat sink will be able to operate at a maximum pressure of 150 psi and maximum operating temperature of 185 degrees F.

PART 2 - PRODUCTS

2.1 MANUFACTURER

A. Silicon Solar Inc., 15 Catherwood Rd, Ithaca NY 14850; tel: (800) 653-8540

B. MATERIALS
1. Custom-fabricated 120 gallon solar hot water tank heated via hot water from evacuated tubes.
1. http://www.siliconsolar.com

C. ACCESSORIES
1. Solar hot water tank will be delivered with temperature and pressure relief valves

2.2 QUALITY ASSURANCE

A. A ½” NPT opening is provided allowing for the installation of a thermostat to control inner temperature.

2.3 REGULATORY REQUIREMENTS

A. The tank has an automatic temperature control if thermostat is not installed.

PART 3 - EXECUTION

3.1 INSTALLATION

A. Installation shall follow manufacturer's instructions.

END OF SECTION 22 12 23.13

SECTION 22 13 00 – FACILITY SANITARY SEWERAGE NUTRIENT FILM TECHNIQUE

PART 1 - GENERAL

1.1 SUMMARY

A. Submittals: Construction documents and product data for each product.

B. Related Sections

1. 22 13 53 Sanitary Sewerage Tank Storage

1.2 SYSTEM DESCRIPTION

A. Definition: The Nutrient Film Technique will be used to filter the gray water produced by the house. The NFT is a hydroponics system with a thin film of water constantly flowing over the plants. Because there is no dirt medium the plants are exposed to more oxygen and can therefore filter out contaminates in the water over a shorter distance.

B. Performance Requirements:
1. A certified manufacturer should manufacture materials.

PART 2 - PRODUCTS

2.1 MANUFACTURER

A. Acceptable source or equivalent: The Home Depot Corporation, 410 Elmira Road Bldg 1 Ithaca, NY 14850; telephone (607) 272-1094; website: www.homedepot.com

2.2 MATERIALS

A. Rounded River Rocks with a dark blue tint to them to be between 2” and 4” in diameter for use in the NFT end tank to cover the water below.
1. http://www.cayugalandscape.com/

B. 4 In. x 8 In. x 16 In. Heavy Weight Cinder Block to be used to support the metal screening that will hold up the river rock.
1. PART NUMBER 202001999
2. http://www.homedepot.com/webapp/wcs/stores/servlet/ProductDisplay?storeId=10051&langId=-1&catalogId=10053&productId=100350188&N=10000003+90093+500516

C. Bilge pump and float valve to be used to control the water in the NFT end tank. When the water rises to high the bilge will pump the water back to the irrigation holding tank.
1. Ultima Combo L450UC
2. http://www.johnson-pump.com/JPMarine/products/bilge/cart_uc.html

D. 1/2” diameter Poly Pipe to be used to run the water from the bilge pump to the water holding tank.

1. 29470- *½" x 100' WFV Poly Pipe*
2. http://www.aquascapeinc.com/consumer

E. Goodyear 3/4 In. x 75 Ft. Industrial Garden Hose
1. Model CWW7534075
2. http://www.homedepot.com/webapp/wcs/stores/servlet/ProductDisplay?storeId=10051&langId=-1&catalogId=10053&productId=100

F. 3/4 In. Full Port Threaded Forged Brass Ball Valve
1. Model 107-404HC
2. http://www.homedepot.com/webapp/wcs/stores/servlet/ProductDisplay?storeId=10051&langId=-1&catalogId=10053&productId=100584442&N=10000003+90093+501112

G. 2.5 Cubic Feet Polyethylene Mortar Mixing Tub to be used to capture the clean gray water coming out of the NFT.
1. PART NUMBER: #0244
2. http://www.capcityequipment.com/mbmothers0244.html

H. Water Fill Valve to be mounted in the gray water tank. This will ensure that the NFT system will always have water in the tank to run through the system even if it is not gray water from the house.
1. PART NUMBER: # 29469 Hudson Fill Valve with Slide Plate
2. http://www.aquascapeinc.com/consumer

I. Plastic Flex Pipe 1-1/2" in diameter to be run between the troughs of the NFT system.
1. PART NUMBER: Flexible PVC Pipe #29022
2. http://www.aquascapeinc.com/consumer

J. Little Giant B-300 submersible pump which will pump the water out of the gray water tank and into the NFT System.
1. Item Number: 556202 Model Number: B-300
2. http://www.lgpc.com/Product/ItemDetail.aspx?ProductID=1246

K. Gardner Bender 48 In. Natural Nylon Heavy-Duty Cable Ties to be used to tie the PVC lines to the scaffolding.
1. PART NUMBER: 46-448
2. http://www.homedepot.com/webapp/wcs/stores/servlet/ProductDisplay?storeId=10051&langId=-1&catalogId=10053&productId=100094240

L. REDBRAND 36" x 50' Welded Wire Mesh to hold rocks above the pump.
1. PART NUMBER: 70946
2. http://www.lowes.com/lowes/lkn?action=productDetail&productId=153520-307-70946&lpage=none

M. Murray Gold Seal # 24 Clamp, 1-1/16"-2"
1. PART NUMBER: BCH24SS09P
2. http://www.lowes.com/lowes/lkn?action=productDetail&productId=64927-408-BCH24SS09P&lpage=none

N. Grodan Rockwool Slabs 6 in wide x 3 ft long x 4 in tall to be used to propagate the plants for the NFT.
1. PART NUMBER: RW 131
2. http://www.horticulturesource.com/product_info.php?products_id=4149

2.3 QUALITY ASSURANCE

A. Installer Qualifications: Installer should be experienced in performing work of this section and should have specialized in installation of work similar to that required for this project.

2.4 REGULATORY REQUIREMENTS

A. All materials shall be recognized for compliance with International Building Code in a current ICC ES evaluation report

PART 3 - EXECUTION

3.1 DELIVERY, STORAGE & HANDLING

A. Materials should be ordered accordingly so they all show up on site at the same time. There should be a one to two month lead-time for ordering materials. The system needs to be growing for three months before gray water is put through it. It should be tested with water and fertilizer for this period.

3.2 INSTALLATION

A. The system should be laid out as to the construction documents with proper curves and placement.

B. The flexible PVC will connect the troughs together in parallel and will be secured to the metal pipe in the through with hose clamps.

C. The gray water will pumped out of the gray water tank and into the start of the system. The regulators will be used to adjust the flow rate of water through the troughs.

D. The end tank will capture the left over clean water and pump it into the irrigation tank.

E. The bilge pump will automatically empty this tank when it fills up.

END OF SECTION 22 13 00

SECTION 22 13 01 FACILITY SANITARY SEWERAGE NFT START VALVE

PART 1 - GENERAL

1.1 SUMMARY

A. Submittals: Construction documents and product data for each product

B. Related Sections

1. 22 13 53 Sanitary Sewerage Tank Storage

2. 22 13 00 FACILITY SANITARY SEWERAGE NUTRIENT FILM TECHNIQUE

1.2 SYSTEM DESCRIPTION

A. The NFT start system allows for adjustment of the water flow through the troughs. It also breaks up the feed hose into three parts so each line can have equal flow.

PART 2 - PRODUCTS

2.1 MANUFACTURER

A. Acceptable source or equivalent**:** The Home Depot Corporation, 410 Elmira Road Bldg 1 Ithaca, NY 14850; telephone (607) 272-1094; website: www.homedepot.com

2.2 MATERIALS

A. Plastic Flex Pipe 1-1/2” in diameter to be run between the troughs of the NFT system.
1. PART NUMBER: Flexible PVC Pipe #29022
2. http://www.aquascapeinc.com/consumer

B. Mister® Landscaper 3/4" Hose Threads 50 Mesh Faucet Filter
1. Model: MLFF-41
2. http://www.lowes.com/lowes/lkn?action=productDetail&productId=3572-1029-MLFF-41&lpage=none

C. 22 13 01. C: 3/4 In. Full Port Threaded Forged Brass Ball Valve
1. Model 107-404HC
2. http://www.homedepot.com/webapp/wcs/stores/servlet/ProductDisplay?storeId=10051&langId=-1&catalogId=10053&productId=100584442&N=10000003+90093+501112

D. 22 13 01. E: Murray Gold Seal # 24 Clamp, 1-1/16"-2"
1. PART NUMBER: BCH24SS09P
2. http://www.lowes.com/lowes/lkn?action=productDetail&productId=64927-408-BCH24SS09P&lpage=none

2.3 QUALITY ASSURANCE

A. Installer Qualifications: Installer should be experienced in performing work of this section and should have specialized in installation of work similar to that required for this project.

PART 3 - EXECUTION

3.1 DELIVERY, STORAGE & HANDLING

A. Materials should be ordered accordingly so they all show up on site at the same time. There should be a one to two month lead-time for ordering materials. The system needs to be growing for three months before gray water is put through it. It should be tested with water and fertilizer for this period.

3.2 INSTALLATION

A. The system should de laid out as to construction documents.

B. Each feed should have a restrictor valve connected to the PVC pipe with hose clamps.

END OF SECTION 22 13 01

SECTION 22 13 19.36 – AIR-ADMITTANCE VALVES

PART 1 - GENERAL

1.1 SUMMARY

A. Submittals: Product data, warranty information, construction drawings

B. Related Sections

1. Section 22 01 10 – Operation and Maintenance of Plumbing Piping and Pumps

2. Section 22 11 13.74 – Domestic Water Piping – PVC Pipe

1.2 SYSTEM DESCRIPTION

A. An air admittance valve shall be acceptable as a vent terminator for any individual vent, common vent, circuit vent, loop vent and island fixture vent that is provided to prevent siphonage of a fixture trap. An air admittance valve can be used as an alternative to extending a vent through the roof (or sidewall) to the open atmosphere. One valve shall be installed in the washer/dryer closet and another inside the kitchen unit for the sink and dishwasher.

B. Performance requirements: Approval by the following industry agencies: IPC, SBCCI, BOCA, IRC, UPC

PART 2 - PRODUCTS

2.1 MANUFACTURER

A. Studor Inc., 200 Pond Rd. (PO Box 783), Randolph MA 02368; tel: (781) 986-2000; fax: (718) 986-2028

B. MATERIALS
1. Redi-Vent is an acrylonitrile butadiene styrene valve with a polypropylene ball valve and sealing assembly
2. Item #: 20346
3. http://www.studor.com/redi-vent.htm

PART 3 - EXECUTION

3.1 INSTALLATION

A. The valve should be connected to the piping in accordance with the manufacturer's installation instructions.

B. The valve should be installed in the vertical, upright position after rough-in and pressure testing of the DWV system.

C. A minimum of one vent shall extend to the open atmosphere for every building drainage system.

D. The valve should not be installed as a vent terminal for any special (chemical) waste system or in supply and return air plenums.

E. For installation in areas with temperature range between -40°F and 150°F.

END OF SECTION 22 13 19.36

SECTION 22 13 53—FACILITY SEPTIC TANKS

PART 1 - GENERAL

1.1 SUMMARY

A. Submittals: Construction documents and product data for each product.

B. Related Sections

1. 22 13 00 – Facility Sanitary Sewerage NFT

1.2 SYSTEM DESCRIPTION

A. The gray and black water tanks will be used to store the waist water produced by the hose.

B. Performance Requirements: The tanks should be sealed to prevent leaks and should be manufactured to the highest standard.

PART 2 - PRODUCTS

2.1 MANUFACTURER

A. Ronco Plastics; 15022 Parkway Loop, Tustin California 92780; tel: 714.259.1385 fax: 714.259.0759; website: http://www.ronco-plastics.net/index.html

2.2 MATERIALS

A. The black water tank is model number b-284 is to be ordered with one cut hole on the top and one 2” fitting placed in the side. The black water tank will not hold true sewage but will need to be pumped out at the end of the competition.
1. PART NUMBER B- 284
2. http://www.ronco-plastics.net/autotanks.html

B. The gray water tank is model number b-230 is to be ordered with one cut hole on the top and one 2” fitting placed in the side and one 4” fitting on the opposite side. The gray water tank will have to have a pump sitting in it to pull out the gray water system to be pulled into the NFT system.
1. PART NUMBER B- 230
2. http://www.ronco-plastics.net/autotanks.html

2.3 QUALITY ASSURANCE

A. Installer Qualifications: Installer should be experienced in performing work of this section and should have specialized in installation of work similar to that required for this project.

B. All tanks should be secured from one source

PART 3 - EXECUTION

3.1 DELIVERY, STORAGE & HANDLING

A. Tanks should be ordered with enough lead time to ensure that they are on site when testing of the plumbing and NFT for the house.

B. Deliver materials from tank manufacturer with identification labels or markings intact.

3.2 INSTALLATION

A. The tanks should be located in location specified in the construction documents.

B. They should be plumed into the house with the proper PVC pipe specified in the plumbing plan.

END OF SECTION 22 13 53

SECTION 22 14 00 - FACILITY STORM DRAINAGE

PART 1 - GENERAL

1.1 SUMMARY

A. Submittals: Construction drawings, product data.

1.2 SYSTEM DESCRIPTION

A. Definition: This system is designed to harvest all the rainwater that that is captured by our house. The system is designed by Aquascape and uses their Rain Exchange system to capture and store the rain water.

B. Performance Requirements: The system must be free of leaks to prevent water from escaping the system and leaking in the ground. The pumps for the system must be certified by outside source.

PART 2 - PRODUCTS

2.1 MANUFACTURER

A. Aquascape, 901 Aqualand Way St Charles, IL 60174; telephone: (866)- 877-6637; fax: (877) 329- 2340; website: www.aquascapeinc.com

2.2 MATERIALS

A. The downspout filter is installed underneath the scuppers of the house and is used capture the rain coming off the roof when it it's the ground.
   1. PART NUMBER: 3016
   2. http://www.aquascapeinc.com/consumer

B. The Aquablox are used to store the water captured by the downspout filter. These blocks are load bearing so they can be placed below grade and out of sight. This helps to prevent evaporation but also serves as a water storage basin.
   1. PART NUMBER: 29492
   2. http://www.aquascapeinc.com/consumer

C. 45 mil EPDM Liner which will surround the Aqaublox and proved the water tight seal around them. The liner is 11' x 16'.
   1. PART NUMBER: 29604
   2. http://www.aquascapeinc.com/consumer

D. Underlayment is made of polyethylene fabric which is non-woven, needle-punched Geotextile. This serves to protect the pond liner from sharp rocks and other materials that could puncture it.
   1. PART NUMBER 29227
   2. http://www.aquascapeinc.com/consumer

E. 2”x4” conventional pressure treated lumber which will be used to build the containment pond for the aquablox. Purchased from certified source.
   1. PART NUMBER :Store SKU# 254985
   2. http://www.homedepot.com/webapp/wcs/stores/servlet/ProductDisplay?storeId=10051&langId=-1&catalogId=10053&productId=100056883LINK

F. 3” Cortext Drain Pipe Solid made of hard constructive plastic and is very durable.
   1. PART NUMBER: 04510100
   2. http://www.homedepot.com/webapp/wcs/stores/servlet/ProductDisplay?storeId=10051&langId=-1&catalogId=10053&productId=100537518

G. The 350 GPH Ulta* Pump will transfer water from the rain water holding tank in the back to the rain lager water holding tank in the front of the house.
   1. PART NUMBER: 98457
   2. http://www.aquascapeinc.com/consumer

H. Polyethylene Snap Tee Corrugated Drainage Fitting for use with corrugated PVC piping.
   1. PART NUMBER: 0421AA
   2. http://www.homedepot.com/webapp/wcs/stores/servlet/ProductDisplay?storeId=10051&langId=-1&catalogId=10053&productId=100141769&N=10000003+90093+528106

I. Rounded River Rocks to be between 2” and 4” in diameter for use in the rainwater catchment basin.
   1. http://www.cayugalandscape.com/

2.3 QUALITY ASSURANCE

A. Installer Qualifications: Installer should be experienced in performing work of this section and should have specialized in installation of work similar to that required for this project. The installer must be approved by Aquascape before performing work.

PART 3 - EXECUTION

3.1 DELIVERY, STORAGE & HANDLING

A. All products must be ordered with enough lead-time to be on site to be installed before final grading occurs.

B. The products should be stored in a safe and dry environment and extra care should be taken to make sure the liner does not get punctured.

3.2 INSTALLATION

A. Downspout filters to be alighted on the center line of the scuppers and sit at top of grade. Corrugated drainage pipe will carry the rainwater filter to the storage tank.

B. The small storage tank will be placed in the back of the house. It will be built with a 2”x4” frame with typical framing. The under liner will be laid down first followed by the pond liner. Load bearing Aquablox will then be placed inside to allow for plants to be put on top and conceal the tanks existence.

C. The transfer pump will be set up to transfer rain water from the small holding tank to the large holding tank.

D. Refer to the landscape mechanical plan for the layout and slope of the pipes.

E. Construct the large holding tank in the front of the yard to the dimensions shown on the plan. Construct in the same fashion as the small holding tank.

END OF SECTION 22 14 00

SECTION 22 35 00 – DOMESTIC WATER HEAT EXCHANGERS

PART 1 - GENERAL

1.1 SUMMARY

A. System Description

A. The H-1 heat sink s a bare fin element of ¾” normal copper tubing with 3” x 3 ¼” x0.024” aluminum fins, spaced 48 per linear foot. The purpose of the heat sink is to absorb and dissipate unnecessary heat from the system.

B. Performance Requirements: The heat sink expends all energy not needed by the solar hot water tank.

PART 2 - PRODUCTS

2.1 MANUFACTURER

A. Slant Fin; 100 Forest Drive Greenvale, NY 11548; tel: (516) 484-2600, fax: (516) 484-5921

B. MATERIALS
1. Product #: H-1
2. http://www.slantfin.com/documents/138.pdf

2.2 QUALITY ASSURANCE

A. Since the hot water tank has either automatic temperature control or thermostat control, the heat sink will expend all energy not needed by the solar hot water tank to continue operating under the desired temperatue.

PART 3 - EXECUTION

3.1 DELIVERY, STORAGE & HANDLING

A. The heat sink will be factory packaged in individual cartons and the “H” element will be delivered along with plastic expansion cradles.

3.2 INSTALLATION

A. Installer should use the M-1 expansion hanger that comes with the heat sink. It is a specific hanger meant especially for bare element heat sinks. Also keep in mind the installed height for elements is defined as the distance from the finished floor to the top of the fin. The minimum mounting heights on all elements without enclosures is 5 ¾” from finished floor to bottom of fins of lowest element. Each fin of the bare element has a tongue and groove allowing adjacent fins

to interlock. This ensures uniform spacing. Also, expanded copper tubing ends eliminate couplings and reduce soldering.

END OF SECTION 22 35 00

SECTION 22 41 13.40 – WATER CLOSETS

PART 1 - GENERAL

1.1 SUMMARY

A. Submittals: Product data, warranty information, construction drawings

B. Related Sections
   1. Section 22 41 39 Residential Faucets, Supplies and Trim
   2. Section 11 26 00 Unit Kitchens

1.2 SYSTEM DESCRIPTION

A. The toilet is chosen to accommodate the team's interior design intentions. The toilet shall remain unhooked from water or sewer lines during competition.

PART 2 - PRODUCTS

2.1 MANUFACTURER

A. KOHLER Plumbing, 444 Highland Drive, Kohler, WI 53044; tel: (800) 456-4537

B. MATERIALS
   1. Purist Hatbox Toilet
   2. Color/finish: White (-0)
   3. K-3492
   4. http://www.us.kohler.com/onlinecatalog/detail.jsp?item=9676302&section=2&category=13

PART 3 - EXECUTION

3.1 DELIVERY, STORAGE & HANDLING

A. All products must be inspected upon delivery to ensure no damage occurred during shipping.

3.2 INSTALLATION

A. The Poise kitchen sink shall be installed in the custom-fabricated kitchen unit.

B. All products shall be installed according to manufacturer's instructions.

END OF SECTION 22 41 13.40

SECTION 22 41 16 – RESIDENTIAL LAVATORIES AND SINKS

PART 1 - GENERAL

1.1 SUMMARY

A. Submittals: Product data, warranty information, construction drawings

B. Related Sections
   1. Section 22 41 39 Residential Faucets, Supplies and Trim
   2. Section 11 26 00 Unit Kitchens

1.2 SYSTEM DESCRIPTION

A. The sinks of the house are chosen to accommodate the team's interior design intentions. All products shall be installed and working throughout the competition.

PART 2 - PRODUCTS

2.1 MANUFACTURER

A. KOHLER Plumbing, 444 Highland Drive, Kohler, WI 53044; tel: (800) 456-4537

2.2 PRODUCTS

A. Cornical Bell Vessels, above-counter
   1. Color/finish: Biscuit (-96)
   2. K-2200-96
   3. http://www.us.kohler.com/onlinecatalog/detail.jsp?item=166802&section=2&category=16

B. Pop-up Clicker Drain
   1. Color/finish: Polished Chrome (-CP)
   2. K-7124-CP
   3. http://www.us.kohler.com/onlinecatalog/detail.jsp?item=11987402&prod_num=7124
   4.

C. Poise Entertainment Stainless Steel Sink, under-counter
   1. K-3161-NA
   2. http://www.us.kohler.com/onlinecatalog/detail.jsp?item=8090802&section=1&category=5&subcategory=37

PART 3 - EXECUTION

3.1 DELIVERY, STORAGE & HANDLING

A. All products must be inspected upon delivery to ensure no damage occurred during shipping.

3.2 INSTALLATION

A. The Poise kitchen sink shall be installed in the custom-fabricated kitchen unit.

B. All products shall be installed according to manufacturer's instructions.

END OF SECTION 22 41 16

SECTION 22 41 23 – RESIDENTIAL SHOWER RECEPTORS AND BASIN

PART 1 - GENERAL

1.1 SUMMARY

A. Submittals: Shop drawings, material samples

B. Related Sections

1. Section 09 34 00 Waterproofing-Membrane Tiling

1.2 SYSTEM DESCRIPTION

A. The shower grate shall be custom made from Black Locust lumber and shall be incorporated with the floor assembly of the bathroom.

PART 2 - PRODUCTS

2.1 MANUFACTURER

A. Tom Brown/Robert Collins Sawmill 1100 Conkrite Rd., Cayuta, NY 14824; tel: (607) 594-3490

B. MATERIALS
1. Species: Black Locust

PART 3 - EXECUTION

A. Fabrication and installation shall strictly follow construction drawings.

END OF SECTION 22 41 23

SECTION 22 41 39 – RESIDENTIAL FAUCETS, SUPPLIES AND TRIM

PART 1 - GENERAL

1.1 SUMMARY

A. Submittals: Product data, warranty information, construction drawings

B. Related Sections
   1. Section 22 41 16 Residential Lavatories and Sinks
   2. Section 11 26 00 Unit Kitchens

1.2 SYSTEM DESCRIPTION

A. Faucets, shower fixtures, and other residential plumbing accessories are off-the-shelf parts which will be installed throughout the house. Right-Angle Shower and Rain showerhead shall be installed from within the bathroom skylight ceiling soffit. Wall-mount kitchen faucet shall be installed in the kitchen unit.

PART 2 - PRODUCTS

2.1 MANUFACTURER

A. KOHLER Plumbing, 444 Highland Drive, Kohler, WI 53044; tel: (800) 456-4537

2.2 PRODUCTS

A. Right-Angle Shower Arm and Flange
   1. Color/finish: Polished Chrome (-CP)
   2. K-10124-CP
   3. http://www.us.kohler.com/onlinecatalog/detail.jsp?item=9910602&section=2&category=8&subcategory=50

B. Contemporary Rain Showerhead
   1. Color/finish: Polished Chrome (-CP)
   2. K-10121-CP
   3. http://www.us.kohler.com/onlinecatalog/detail.jsp?item=9910302&section=2&category=8&subcategory=50

C. Stillness® Stacked thermostatic valve trim and accessories
   1. Color/finish: Polished Chrome (-CP)
   2. K-T10941-4-CP
   3. http://www.us.kohler.com/onlinecatalog/detail.jsp?item=10083802&section=2&category=8&subcategory=50

D. Stillness® Widespread Lavatory Faucet
   1. K-942-4-CP
   2. Color/finish: Polished Chrome

3. http://www.us.kohler.com/onlinecatalog/detail.jsp?from=thumb&frm=&module=Lavatory+Faucets&item=6124102&prod_num=942-4&section=2&category=8&resultPage=0--1639049684

E. Mastershower Vavles, Thermostatic Mixer with Volume Controle
1. K-680-KS
2. http://www.us.kohler.com/onlinecatalog/detail.jsp?item=10190302&section=2&category=12&subcategory=126

F. Karbon Wall-mount Kitchen Sink Faucet
1. Color/finish: Polished Chrome (-PC)
2. K-6228-CP
3. http://www.us.kohler.com/onlinecatalog/detail.jsp?item=13869802&section=1&category=4&subcategory=32

G. Duostrainer ® Sink Strainer
1. Color/finish: Polished Chrome (-PC)
2. K-8801-CP
3. http://www.us.kohler.com/onlinecatalog/detail.jsp?item=468302&section=1&category=7&subcategory=41

H. Stillness Tissue Holder
1. Color/finish: Polished Chrome (-PC)
2. K-14459-CP
3. http://www.us.kohler.com/onlinecatalog/detail.jsp?from=thumb&frm=&module=Accessory+Collection++Bath&item=7675002&prod_num=14459&section=2&category=19&resultPage=0-1794489055

PART 3 - EXECUTION

3.1 DELIVERY, STORAGE & HANDLING

A. All products must be inspected upon delivery to ensure no damage occurred during shipping.

3.2 INSTALLATION

A. All products shall be installed according to manufacturer's instructions.

END OF SECTION 22 41 39

SECTION 22 52 00- FOUNTAIN PLUMBING SYSTEM

PART 1 - GENERAL

1.1 SUMMARY

A. Submittals: Product data, construction documents.

B. Related Sections

1. Section 22 14 00 Facility Storm Drainage

2. Section 32 82 00 Irrigation Pumps

1.2 SYSTEM DESCRIPTION

A. The fountain will provide a decretive feature for the landscape that will showcase the rainwater harvesting system.

B. Performance Requirements: The fountain pump will be required to provide enough water so there is a slow trickle of water flowing off the top of the feature at all times.

PART 2 - PRODUCTS

2.1 MANUFACTURER

A. Aquascape, 901 Aqualand Way St Charles, IL 60174; telephone: (866)- 877-6637; fax: (877) 329- 2340; website: www.aquascapeinc.com

2.2 MATERIALS

A. Tall ceramic Urn fountain with Tan/Red Finish.
1. PART NUMBER 98474
2. http://www.aquascapeinc.com/consumer

B. AquaSurge 3000 GPH Pump which will be used to run the water feature.
1. PART NUMBER: 99846
2. http://www.aquascapeinc.com/consumer

C. 1.5” Kink-Free Flex Pipe.
1. PART NUMBER: 94006
2. http://www.aquascapeinc.com/consumer

D. ACCESSORIES
1. Universal pump installation kit to be used to attached kink free flex pipe from pump to fountain**.**
2. PART NUMBER: 99766

3. http://www.aquascapeinc.com/consumer

2.3 QUALITY ASSURANCE

A. Installer Qualifications: Installer should be experienced in performing work of this section and should have specialized in installation of work similar to that required for this project.

PART 3 - EXECUTION

3.1 DELIVERY, STORAGE & HANDLING

A. Fountain, pump, and accessories should be order with enough lead-time to arrive on site to be installed before the plant material.

B. Store in safe and secure place out of the way of construction activity.

3.2 INSTALLATION

A. The pump and fittings should be dry assembled and then glued together with PVC glue.

B. Refer to construction documents for location of fountain and pump.

C. The pump should be lowered into the water tank and turned on to test and fill fountain.

D. Level fountain on site to allow for an equal amount of water to be flowing over the rim of the urn at all times.

END OF SECTION 22 52 00

SECTION 23 05 23 - GENERAL-DUTY VALVES FOR HVAC PIPING

PART 1 - GENERAL

1.1 SUMMARY

A. Submittals:

1. MH-103 HVAC P&ID Diagram
2. PP-105 Solar Thermal Controls P&ID Diagram
3. Instruction Manual: http://www.bellgossett.com/literature/files/583.pdf
4. Product Submittal: http://www.bellgossett.com/literature/files/189.pdf

B. Related Sections:

1. 23 21 13 Hydronic Piping
2. 23 21 23 Hydronic Pumps

1.2 SYSTEM DESCRIPTION

A. The Bell & Gossett CIRCUIT SETTER PLUS calibrated balance valve is a precision machined ball type triple purpose balancing instrument. It is precisely calibrated for use as a presettable balance valve, variable orifice flow meter and positive shut-off service valve. Valves are furnished with a calibrated nameplate and memory stop indicator which permits the valve to be preset to a fixed open position and then closed for service without disturbing valve setting. Valves are equipped with capped readout valves fitted with internal check valves and 1/4" NPT tapped and plugged drain port.

B. Performance Requirements: The valves will operate under a maximum pressure of 200 psig (1379 kPa) and a maximum temperature of 250°F (121°C).

PART 2 - PRODUCTS

2.1 MANUFACTURER

A. ITT Residential & Commercial Water – Bell & Gossett 8200 N. Austin Ave, Morton Grove, IL 60053; tel: (847) 966-3700; fax: (847) 965-8379

B. MATERIALS
1. Body: Bronze
2. Ball: Brass
3. Seat Rings: Glass and Carbon filled TFE
4. Readout Valves: Brass with EPT check valves
5. Stern "O" Ring: EPDM

6. Model: Bell and Gossett CB−3/4S Part Number: 117413
7. http://www.bellgossett.com/literature/files/189.pdf

2.2 QUALITY ASSURANCE

A. Installer will furnish and install as shown on plans with manufacturer recommendations Model CB calibrated balance valves.

B. Valves to be designed to allow installing contractor to pre-set balance points for proportional system balance prior to system startup in accordance with pre-set balance schedule.

C. Installer will take all necessary precautions as stated in the Installation Manual

PART 3 - EXECUTION

3.1 DELIVERY STORAGE AND HANDLING

A. Order unit to meet the performance requirements included on the product submittal.

B. Ship unit to site and tag with the unit name. Protect the unit from damage during shipment and onsite storage.

3.2 INSTALLATION

A. To retain calibrated accuracy, a minimum length of unrestricted straight pipe equivalent to 3-pipe diameters upstream and 1-pipe diameter downstream must be maintained immediately adjacent to Circuit Setter Balance Valves.

B. Circuit Setter Balance Valves are bi-directional valves and can be installed in most altitudes, however, they should be installed in a position to facilitate the ease of balancing the system.

C. Use a torch with a sharp pointed flame.

D. Clean tube ends and Circuit Setter connections thoroughly.

E. Use 95-5 (Tin-Antimony) solder and a good grade of flux.

F. When sweating the joints, first wrap the valve body with a cool wet rag, then direct the flame with care to avoid subjecting the Circuit Setter to excessive heat. Allow the valve body to cool below 200°F before installing the (2) Model RV-125A Readout Valves packaged with the Circuit Setter Balance Valve.

G. Check soldered connections for leaks. If resoldering is required, remove the readout valves before applying the torch to the connection(s).

H. Follow operations instructions as detailed by the installation manual.

END OF SECTION 23 05 23

SECTION 23 09 00 – INSTRUMENTATION AND CONTROL FOR HVAC

PART 1 - GENERAL

1.1 SUMMARY

A. Submittals:
   1. MH-103 HVAC Controls Flow Diagram
   2. MH-104 HVAC Controls P&ID Diagram
   3. MH-105 HVAC Controls Schedule

B. Related Sections
   1. 23 31 13.16 Round and Flat-Oval Spiral Ducts

1.2 System Description

A. Implement control system with logic and scheduling using sensors to monitor both the interior of the house and the HVAC system.

B. Performance Requirements: Controllers must be configured by manufacturer with appropriate inputs and outputs assigned. Control logic is to be programmed by professionals to ensure maintainability and stability. Sensors and controllers are to be installed under the supervision of professionals.

PART 2 - PRODUCTS

2.1 MANUFACTURERS

A. Automated Logic Corporation, 1150 Roberts Blvd., Kennesaw, Georgia, 30; tel: (770) 429-3000; fax: (770) 429-3001;http://www.automatedlogic.com

B. Building Automation Products, Inc., 750 North Royal Avenue Gays Mills, Wisconsin 54631; tel: (608) 735-4800; fax: (608) 735-4804; http://www.bapihvac.com/index.htm

2.2 MATERIALS

A. Multi-Equipment Controller and Router: connects to and operates all the sensors and probes; connects to the Internet so that it is accessible and modifiable remotely. To be donated by Automated Logic Corp.
   1. ME-LGR
   2. http://www.automatedlogic.com/alcinternet.nsf/webview/products_ME-LGR?OpenDocument

B. I/O Expander: the MEx series of I/O expanders are designed for the for the ME-LGR. To be donated by Automated Logic Corp.
   1. MEX816U
   2. http://www.automatedlogic.com/alcinternet.nsf/webview/products_MEX?OpenDocument

C. Washdown Wall Plate Units: measure the temperature and humidity in the rooms. BAPI has been contacted regarding procurement.
   1. PBA/SPV-102-DBG
   2. http://www.bapihvac.com/Washdown_Wall_Plate.htm

D. Duct Units: Monitor and measure the temperature and humidity in the air ducts. BAPI has been contacted regarding procurement.
   1. BA/100-H200-D-x
   2. http://www.bapihvac.com/Duct_Humid.htm

E. Immersion Sensors: measure the temperature of the water flowing through the pipes. BAPI has been contacted regarding procurement.
   1. BA/100-I-4”-x
   2. http://www.bapihvac.com/Immersion.htm

F. Remote Sensors and Probes: immersed in a tank to measure the temperature of the water in the tank. BAPI has been contacted regarding procurement.
   1. BA/1.8K-RPP-18” - x
   2. http://www.bapihvac.com/Remote1.htm

2.3 QUALITY ASSURANCE

A. Installer should be experienced in installation of HVAC control systems in the manner typical of Cornell University campus projects with Automated Logic Corp. control systems.

2.4 REGULATORY REQUIREMENTS

A. Products should be recognized as UL Listed.

PART 3 - EXECUTION

3.1 DELIVERY, STORAGE & HANDLING

A. Ordering: Communicate with Cornell Project Design and Construction to ensure the Automated Logic Corp. products are received.

B. Delivery: Deliver Automated Logic Corp. products to Cornell Project Design and Construction to ensure the safety of sensitive product.

3.2 INSTALLATION

A. Installation process should be overseen by professionals to ensure adherence to safety and quality standards.

B. Install control wiring concealed, except in mechanical closet, according to typical practices.

END OF SECTION 23 09 00

SECTION 23 09 23 – DIRECT-DIGITAL CONTROL SYSTEM FOR HVAC

PART 1 - GENERAL

1.1 SUMMARY

A. Submittals: Product data, electrical diagrams, construction drawings

1.2 SYSTEM DESCRIPTION

A. The house HVAC system shall be controlled by computerized systems to facility efficient heating and cooling and maximum comfort within the house. Each room shall be equipped with a touch-screen interface which will allow occupant to change the interior climate. Automated controls will also be integrated so that the house can find equilibrium without manual input.

PART 2 - PRODUCTS

2.1 MANUFACTURER

A. CES Computerized Electricity Systems, 5 Arye Regev St., P.O. Box 8011, Netanya Israel 42505; tel: +972 (9) 835-1194; fax: +972 (9) 835-1197

2.2 PRODUCTS

A. CES Distribution Panel
   1. http://c-e-systems.com/index.php/ces-system/specifications/us-specifications.html

B. CES CMCS Monitoring Software
   1. http://c-e-systems.com/index.php/ces-system/ces-monitoring-a-control-software.html

2.3 QUALITY ASSURANCE

A. Examine components immediately after removal from manufacturer's packaging. Report damaged or missing components directly to manufacturer.

PART 3 - EXECUTION

3.1 INSTALLATION

A. Touch-screen placement should adhere to locations specified in the construction drawings.

B. Installation shall follow manufacturer's instructions.

END OF SECTION 23 09 23

SECTION 23 21 23 - HYDRONIC PUMPS

PART 1 - GENERAL

1.1 SUMMARY

A. Submittals:

1. MH-103 HVAC P&ID Diagram
2. PP-100 Plumbing Schematic
3. PP-101 Solar Thermal Schematic
4. PP-105 Solar Thermal Controls P&ID Diagram
5. Product and performance data

B. Related Sections:

1. 23 81 43 Air-Source Unitary Heat Pumps

1.2 System Description

A. Definition:

1. Bell and Gossett PL-36: Pumps circulate liquid running in the heating and cooling loops. close coupled booster pumps are specifically designed for quiet operation in hydronic, radiant and geothermal heating and cooling systems. These inline permanently lubricated pumps are available in cast iron construction.
2. Bell and Gossett NRF-22: A flanged in-line system lubricated circulating pump designed specifically for quiet operation in a closed hydronic heating system.

B. Performance Requirements:

1. Bell and Gossett PL-36: Operate under a maximum working pressure of 150 psi (10 Bar) and maximum operating temperature of 225°F (107°C). The pumps shall be ITT Bell & Gossett Model No. PL-36 with a capacity of 8 GPM at 30-35 feet of head.
2. Bell and Gossett NRF-22: Pumps to be suitable for 240°F (115°C) operation at 150 psig (10.3 Bar) working pressure. Pumps to have a capacity of 3 GPM at 14-15feet of head when powered by 115 volt, 60 cycle, single phase electrical supply.

PART 2 - PRODUCTS

2.1 MANUFACTURER

A. Manufacturer Information: Bell & Gossett/Domestic Pump 8200 N. Austin Ave. Morton Grove, IL 60053 Tel. (847) 966-3700 Fax. (847) 966-9052

2.2 MATERIALS

A. RCC Loop Pump

1. Bell and Gossett PL-36:
   a. Booster Body: Cast Iron
   b. Face Plate: Stainless Steel
   c. Impeller: 30% Glass Filled Noryl®
   d. Shaft: Carbon Steel
   e. Shaft Sleeve: Stainless Steel
   f. Seal: Mechanical, Carbon on Silicon Carbide
   g. Motor Type: ODP
   h. Elastomers: EPDM
   i. Motor Bearings: Sealed Precision Steel Ball Bearing, Permanently Lubricated
2. Part Number 1BL001
3. http://www.bellgossett.com/literature/files/155.pdf

B. Heating Loop Pump
1. Bell and Gossett NRF-22:
   a. Pump Body: Cast Iron
   b. Impeller: Noryl
   c. Shaft: Ceramic
   d. Bearings: Carbon
2. Part Number 103251
3. http://www.bellgossett.com/literature/files/152.pdf

C. Solar Thermal Loop Pump
1. Bell and Gosset NRF-36
2. http://www.bellgossett.com/WhatsNew/LIT19Nov08-Bulletin-A-112D.pdf

D. Alt. Solar Thermal Loop Pump
1. Taco Model 007
2. http://www.taco-hvac.com/en/products/Model+007+Cartridge+Circulator/products.html?view=ProdDetail&current_category=52&Product=10

2.3 QUALITY ASSURANCE

A. Bell and Gossett PL-36: The contractor shall furnish and install inline pumps as illustrated on the plans and in accordance with the following specifications.

B. Bell and Gossett NRF-22: The contractor shall furnish and install in-line circulating pumps as illustrated on the plans and in accordance with the following specifications The pump manufacturer shall be ISO-9001 certified.

PART 3 - EXECUTION

3.1 DELIVERY, STORAGE & HANDLING

A. Order pumps to meet the performance requirements included on the drawing schedules. Include all accessories noted.

B. Ship unit to site and tag with the pump name. Protect the pump from damage during shipment and on site storage.

3.2 INSTALLATION

A. Bell and Gossett PL-36:
   1. The pumps shall be of the horizontal, permanently lubricated type, specifically designed and guaranteed for quiet operation. The pumps shall have a steel shaft supported by permanently lubricated, sealed precision ball bearings.
   2. The pumps are to be equipped with a water-tight seal to prevent leakage. Mechanical seal faces to be carbon on silicon carbide. The motor shall be non-overloading at any point on the pump performance curve.
   3. The motor shall be of the drip-proof, sealed precision ball-bearing, quiet-operating construction. The permanent split-capacitor motor shall be equipped with thermal overload protection.

B. Bell and Gosset NRF-22:
   1. The pumps shall be of the horizontal, system lubricated type specifically designed and guaranteed for quiet operation.
   2. The pumps shall have a ceramic shaft supported by carbon bearings. Bearings are to be lubricated by the circulating fluid.
   3. Motor stator to be isolated from circulating fluid through use of stainless steel can. Rotor to be sheathed in stainless steel.
   4. Motors shall be non-overloading at any point on the pump curve. NRF-22 motors to have built-in impedance protection.

END OF SECTION 23 21 23

SECTION 23 31 13– ROUND DUCTS

PART 1 - GENERAL

1.1 SUMMARY

A. Submittals:
   1. MH-100: Mechanical Plan
   2. Product data

B. Related Sections
   1. Section 23 31 13.16 Flat-Oval Spiral Ducts
   2. Section 23 31 13.19 Metal Duct Fittings

1.2 SYSTEM DESCRIPTION

A. Galvanized sheet metal formed into round or flat-oval ducts

B. Performance requirements: Must adhere to SMACNA's requirement of Leakage Class 3 as indicated not to exceed (-20 in. W.G) or (+12 in. W.G). Must also adhere to SMACNA's Duct Construction Standards (+10" W.G.)

PART 2 - PRODUCTS

2.1 MANUFACTURER

A. Standard round ductwork is to be obtained from: Stamped Fittings, 217 Lenox Ave., Elmira Heights, NY 14903; Phone: 607.733.9988; Fax: 888.DIE.FORM (888.343.3676); website: www.stampedfittings.com

2.2 MATERIALS

A. Spiral round ducts
   a. Standard spiral round ducts found in ductwork
   b. The EDGE spiral duct
   c. http://www.stampedfittings.com/pp/uploads/pdf/edge-submittal.pdf

2.3 QUALITY ASSURANCE

A. Installer Qualifications: Installer should be experienced in performing work of this section and should have specialized in installation of work similar to that required for this project.

B. All accessories to be as furnished or recommended by the manufacturer

PART 3 - EXECUTION

3.1 DELIVERY, STORAGE & HANDLING

A. Delivery: Delivered to the PDC shop and then transferred to building site for installation.

3.2 INSTALLATION

A. Custom and spiral ducts to be installed with the oversight of professionals to ensure proper duct installation.

END OF SECTION 23 31 13

SECTION 23 31 13.16 –FLAT-OVAL SPIRAL DUCTS

PART 1 - GENERAL

1.1 SUMMARY

A. Submittals:
   1. MH-100: Mechanical Plan

B. Related Sections
   1. Section 23 31 13 Round Ducts
   2. Section 23 31 13.19 Metal Duct Fittings

1.2 System Description

A. Galvanized sheet metal formed into round or flat-oval ducts

B. Performance requirements: Must adhere to SMACNA's requirement of Leakage Class 3 as indicated not to exceed (-20 in. W.G) or (+12 in. W.G). Must also adhere to SMACNA's Duct Construction Standards (+10" W.G.)

PART 2 - PRODUCTS

2.1 MANUFACTURER

A. Custom spiral metal ducts to be constructed in Cornell University Planning, Design, & Construction sheet metal shop with guidance from professionals. Will create according to needs of supply and return air plenum and to fit the circular ducts used for the rest of the house. Will design ducts in according with accepted practice.

B. Cornell University Project Design and Construction, Metal Shop, Humphreys Service Building, Ithaca, New York 14853; tel: (607) 254-2996; fax: (607) 25-8071

C. MATERIALS
   1. Galvanized-Steel Sheet
      a. Process of coating iron or steel with a thin layer of zinc which oxidizes and stops further corrosion from the elements.
      b. ASTM A 653/A 653M, with G60 hot-dip galvanized coating.

2.2 QUALITY ASSURANCE

A. Installer Qualifications: Installer should be experienced in performing work of this section and should have specialized in installation of work similar to that required for this project.

B. All accessories to be as furnished or recommended by the manufacturer

PART 3 - EXECUTION

3.1 DELIVERY, STORAGE & HANDLING

A. Delivery: Delivered to the PDC shop and then transferred to building site for installation.

3.2 INSTALLATION

A. Custom and spiral ducts to be installed with the oversight of professionals to ensure proper duct installation.

END OF SECTION 23 31 13.16

SECTION 23 31 13.19 – METAL DUCT FITTINGS

PART 1 - GENERAL

1.1 SUMMARY

A. Submittals:
   1. Product data sheets

B. Related Sections
   1. SECTION 23 31 13.16 Round and Flat-Oval Spiral Ducts

1.2 System Description

A. *EDGE*® Fittings connects ductwork together, allowing for a seamless flow of air

B. Performance Requirements:
   1. All *EDGE*® fittings, 4" – 36", will have a factory installed gasket that is attached to the fitting with a 180o hemmed edge for strength, rigidity and maintaining proper tolerances.
   2. All fittings will have a factory installed EPDM gasket, which has an operating temperature rating of -20oF to 212oF. The base EPDM (black material) is classified according to ASTM D2000-86 M3BA 810 B13 C12 F17. The sealing EPDM (grey material) is classified according to ASTM D2000-86 M8BA 507 B13 C12. The smoke and flame spread is in accordance to ASTM E-84-91A.
   3. Must adhere to SMACNA's requirement of Leakage Class 3 as indicated not to exceed (-20 in. W.G) or (+12 in. W.G). Must also adhere to SMACNA's Duct Construction Standards (+10" W.G.)
   4. All fittings are manufactured to slip fit into spiral duct. All fitting to fitting connections will use a fitting coupling.

PART 2 - PRODUCTS

2.1 MANUFACTURER

A. Stamped Fittings, 217 Lenox Ave., Elmira Heights, NY 14903; Phone: 607.733.9988; Fax: 888.DIE.FORM (888.343.3676); website: www.stampedfittings.com

B. Flangeless Elbow
   1. Stamped Fittings Inc. 90 deg Die Stamped saddle top. Elbow allows the ducts to move in 90 deg turns.
   2. Gasket 90 deg Die Stamped 1.0 CRE Elbow (GDSE90), sizes 8" and 10", galvanized
   3. http://www.stampedfittings.com/pp/uploads/pdf/edge-submittal.pdf

C. Endcap Plugs
   1. Stamped Fittings Inc. endcap plugs. Covers the end of the duct so no air flows out.
   2. Gasket End Plug (GEP) – 12"
   3. http://www.stampedfittings.com/pp/uploads/pdf/edge-submittal.pdf

D. Male couplings

1. Stamped Fittings Inc. coupling. Allows sections of ducts to be connected together to form the complete length of ducts required.
2. Gasket Pipe Coupling (GPC) – 8” and 10”
3. http://www.stampedfittings.com/pp/uploads/pdf/edge-submittal.pdf

2.2 QUALITY ASSURANCE

A. Installer Qualifications: Installer should be experienced in performing work of this section and should have specialized in installation of work similar to that required for this project.

B. Calibration of spiral is required by The *EDGE*® System manufacturer, Stamped Fittings Inc.

C. All accessories to be as furnished or recommended by the manufacturer.

PART 3 - EXECUTION

3.1 DELIVERY, STORAGE & HANDLING

A. Delivery: Delivered to the PDC shop and then transferred to building site for installation.

3.2 INSTALLATION

A. The *EDGE*® System fittings are made to fit tight, assuring a proper seal. Care should be taken when handling these fittings as damage could result in an improper fit and a difficult installation process.

B. Place the hemmed EDGE of the fitting in the spiral pipe then apply pressure and the fitting will slip into place, stopping at the bead/pipe stop.

C. Using self-tapping sheet metal screws, place the screws 3/4” from the bead/pipe stop. The gasket and fittings are designed to allow adequate room to secure the screws per SMACNA standards.

D. Installation of ducts/duct fittings/duct system will be inspected by professional.

END OF SECTION 23 31 13.19

SECTION 23 56 00.02 – HEAT SINK FOR SOLAR THERMAL SYSTEMS

PART 1 - GENERAL

1.1 SUMMARY

A. Related Sections

1. Section 23 56 00.01 – Building Integrated Solar Thermal System

2. Section 23 56 13.19 – Heating Solar Vacuum-Tube Collectors

1.2 SYSTEM DESCRIPTION

A. Definition: A heat sink is used for the solar thermal systems to dissipate heat into the surrounding air should there be no need for the heat generated from the systems.

B. Performance Requirements: The heat sink is sized to dissipate all the heat necessary to ensure safety of the solar thermal systems.

PART 2 - PRODUCTS

2.1 MANUFACTURER

A. Cornell Planning, Design, Construction, 125 Humphreys Service Building, Cornell University, Ithaca, New York 14853

B. MATERIALS
1. Aluminum square fins bonded to copper pipe
2. Custom fabricated from Cornell Planning, Design, Construction

2.2 QUALITY ASSURANCE

A. Fabricator Qualifications: Fabricator should be experienced in performing work of this section and should have specialized in fabrication of work similar to that required for this project.

B. Installer Qualifications: Installer should be experienced in performing work of this section and should have specialized in installation of work similar to that required for this project.

2.3 REGULATORY REQUIREMENTS

A. The heat sinks for the solar thermal systems shall be recognized for compliance with all plumbing codes and standards in the International Residential Code.

PART 3 - EXECUTION

3.1 INSTALLATION

A. The heat sinks shall be installed in adherence to all necessary requirements of plumbing code and regulations.

B. The solar thermal heat sink shall be installed on the roof of the kitchen module, to be mounted 1’ above the roof to allow for good air convection for heat transfer. During transportation, the heat sink shall be removed.

C. The building integrated solar thermal system heat sink shall be installed under the deck with enough clearance space to allow for proper free convective heat transfer.

D. Ball valves will be installed to isolate the heat sink.

E. Control valves will be installed and control logic determined to allow for proper use of the heat sink when its use is necessary.

END OF SECTION 23 56 00.02

SECTION 23 56 13.19 – HEATING SOLAR VACUUM-TUBE COLLECTORS

PART 1 - GENERAL

1.1 SUMMARY

A. Submit product detail details from website description; submit evacuated tube installation guide; submit warranty information.

1.2 System Description

A. In this innovative system, evacuated tube solar collectors will be used to collect energy from the sun in order to heat the water flowing through the tubes. It can handle flow rates up to 4 GPM and water will travel from the evacuated tubes and through a solar hot water tank.

B. Performance Requirements: The evacuated tubes will be required to handle flow rates around 3 GPM and

PART 2 - PRODUCTS

2.1 MANUFACTURER

A. Silicon Solar Inc.; Ithaca Office: 1143 Dryden Road Ithaca, NY 14850 Phone: (607) 563-SUN5 Fax: (866) 659-4829

B. MATERIALS
1. The evacuated tube solar collector will collect energy from the sun and use that energy to heat internal water.
2. SKU: SunMaxx-30U
3. http://www.siliconsolar.com/30-upipe-evacuated-tube-solar-collector-p-18115.html

C. ACCESSORIES
1. The evacuated tubes, when ordered, will come packaged together with 1.) complete flush and tilt mounting face frame to provide most efficient angle for collecting sunlight 2.) manifold to better absorb sunlight 3.) heat pipes 4.) necessary hardware for installation.

2.2 QUALITY ASSURANCE

A. While the evacuated tubes are capable of do-it-yourself assembly, it is highly recommended that the customer contact a local professional installer or certified SunMaxx Dealer. A certified installer will provide system design, system troubleshooting, system service, on site communication, and an extended 10-year warranty.

2.3 REGULATORY REQUIREMENTS

A. SunMaxx evacuated tube solar collectors with u-pipes are currently in the process of SRCC certification, and are in line with current building codes.

PART 3 - EXECUTION

3.1 INSTALLATION

A. Installation shall follow all instructions provided by manufacturer.

END OF SECTION 23 56 13.19

SECTION 23 72 19 – FIXED-PLATE AIR TO AIR ENERGY-RECOVERY EQUIPMENT

PART 1 - GENERAL

1.1 SUMMARY

A. Submittals:
   1. Technical Drawings:
      http://www.renewaire.com/_assets/files/TechDrawings/EV70DIMS.pdf
   2. MH-100 Mechanical Plan
   3. MH-103 Mechanical P&ID Diagram

B. Related Sections:
   1. 23 31 13 Round Ducts
   2. 23 31 13.16 Flat-Oval Spiral Ducts

1.2 SYSTEM DESCRIPTION

A. Energy Recovery Ventilator (ERV) is the process of exchanging the energy contained in a normally exhausted building or space air and using it to treat the incoming outdoor ventilation air in residential and commercial HVAC systems

B. Performance Requirements:
   1. Energy Transfer: The energy recovery core shall be capable of transferring both sensible and latent energy between air streams. Latent energy transfer shall be accomplished by direct water vapor transfer using molecular transport by hydroscopic resin.
   2. Passive Frost Control: The energy recovery core shall perform without the occurrence of condensation or frosting under normal operating conditions (defined as outside temperatures above -10°F and inside relative humidity below 40%). Occasional extreme conditions shall not affect the usual function or performance of the energy recovery core.
   3. Continuous Ventilation: The unit shall accomplish energy recovery in both heating and cooling seasons and shall have the capacity to operate continuously without the need for bypass, recirculation, pre-heaters or other defrost cycles under normal operating conditions.
   4. Positive Air Stream Separation: Exhaust and fresh airstreams shall at all times travel in separate passages, and airstreams shall not mix.
   5. Laminar Flow: Airflow through the energy recovery core shall be laminar, avoiding deposition of particulates on the interior of the exchange plate material.

PART 2 - PRODUCTS

2.1 MANUFACTURER

A. Manufacturer Information: 4510 Helgesen Drive, Madison, WI, 53718 Phone: 608.221.4499, 800.627.4499, Fax: 608.221.2824

2.2 MATERIALS

   1. Static plate energy recovery ventilator
   2. EV70

3. http://www.renewaire.com/technical/pdf.php?myPath=SubmittalForms&filename=EV70Submittal.pdf

2.3 QUALITY ASSURANCE

A. The energy recovery ventilator shall be certified by the Home Ventilating Institute (HVI) under CSA 439. Both a heating and an air conditioning test must be run to demonstrate year round energy recovery.

B. Unit shall be Listed under UL 1812, Standard for Ducted Air to Air Heat Exchangers.

C. The energy recovery core shall meet NFPA 90A and 90B requirements for flame spread, not to exceed 25, and smoke generation, not to exceed 50, through an on going testing and verification program using UL Standard 723.

D. The RenewAire core shall be warranted to be free of manufacturing defects and to retain its functional characteristics, under circumstances of normal use, for a period of ten years from the date of purchase. Balance of Unit shall be warranted to be free of manufacturing defects and to retain its functional characteristics, under circumstances of normal use, for a period of two years from the date of purchase.

PART 3 - EXECUTION

3.1 DELIVERY, STORAGE & HANDLING

A. Order unit to meet the performance requirements included on the drawing schedules. Include all accessories noted.

B. Ship unit to site and tag with the unit name. Protect the unit from damage during shipment and onsite storage.

3.2 INSTALLATION

A. The energy recovery core shall be of static plate, cross-flow construction, with no moving parts.

B. No condensate pan or drain shall be required.

C. The unit shall be supplied with an internal 24 VAC transformer and relay.

D. The unit shall have line cord for easy plug-in operation.

E. A latched and hinged door shall provide access to blowers, energy recovery core, and filters.

F. Cabinet walls and doors shall be insulated with 1” FSK high-density board insulation, with additional ¼” foam insulation on access door for thermal and sound insulation.

G. The energy exchange element and blowers shall be protected by a polyester filter in both exhaust air and fresh air streams.

END OF SECTION 23 72 19

SECTION 23 81 43 – AIR-SOURCE UNITARY HEAT PUMPS

PART 1 - GENERAL

1.1 SUMMARY

A. Submittals:
   1. Design Manual: http://www.unicosystem.com/Portals/0/Pdf_Files/Bulletin_40-60_(2004-10).pdf
   2. Installation Manual: http://www.unicosystem.com/Portals/0/Pdf_Files/Bulletin_30-032_(2007-05).pdf
   3. Performance Data: http://www.unicosystem.com/Portals/0/Pdf_Files/Bulletin_20-030_(2007-10).pdf

B. Related Sections:
   1. Section 23 21 23 Hydronic Pumps

1.2 SYSTEM DESCRIPTION

A. The UniChiller is a self-contained and pre-charged air-to-water heat pump.

B. Performance Requirements: While cooling the UniChiller will operate under an outside temperature range of 20 to 115°F (-7 to 46 °C) and water temperature range of 38 to 60 °F (3 to 16 °C). While heating the UniChiller will operate under an outside temperature range of 10 to 70 °F (-10 to 21 °C) and water temperature of up to 125°F (52 °C).

PART 2 - PRODUCTS

2.1 MANUFACTURER

A. Manufacturer Information: Unico, Inc.7401 Alabama Ave. St. Louis, MO 63111-9906; tel: (800) 527-0896, (314) 481-9000; Fax (314) 457-9000

2.2 MATERIALS

A. Unico Unichiller Air-to-Water Heat Pump (Reverse Cycle Chiller)
   1. UCHR-036-1-1-P
   2. http://www.unicosystem.com/Portals/0/Pdf_Files/Bulletin_30-032_(2007-05).pdf

B. Silicon Solar Custom Surge Tank
   1. Custom Model: 50 gallon capacity
   2. http://www.siliconsolar.com/solar-water-storage-tanks.html
   3. Flow Switch: There is a flow switch that is activated if there is an interruption in the liquid solution flow. It shuts the unit down, if activated.
   4. Low Pressure Switch: Low pressure switch opens at 40 psig and resets at 80 psig. It is used only in the cooling mode.
   5. High Pressure Switch: High pressure switch opens at 400 psig and resets at 300 psig. It is used both in heating and cooling modes.

6. Five-Minute Delay on Break Timer: It activates every time the compressor shuts down.

2.3 QUALITY ASSURANCE

A. UniChillers are safety certified to ANSI/U.L.1995, CAN/CSA C22.2 No. 236-05 and MEA (Materials and Equipment Acceptance Division, City of New York). The MEA number is 361-04-E.

PART 3 - EXECUTION

3.1 DELIVERY, STORAGE & HANDLING

A. Order unit to meet the performance requirements included on the drawing schedules. Include all accessories noted.

B. Ship unit to site and tag with the unit name. Protect the unit from damage during shipment and onsite storage.

3.2 START-UP PROCEDURES

A. OFF MODE: There is no power going to the unit when the unit is in this mode.

B. COOLING MODE: When power is applied from the circuit breaker, the control transformer is energized. The pump bypass timer (10 second timer) temporarily bypasses the flow switch. The pump starts to move the liquid solution if the system is properly filled and air purged. The digital temperature controller is also activated when the pump is energized. If after 10 seconds the flow switch shuts off for any reason, the system will stop and must be manually re-energized. If the temperature controller calls for cooling, then the compressor and the fans are energized.

C. HEATING MODE: When the power is applied from the circuit breaker, the control transformer is energized. The reversing valve is also energized, reversing the flow of the refrigerant to make hot water. The pump bypass timer (10 second timer) temporarily bypasses the flow switch. The pump starts to move the liquid solution, if the system is properly filled and air purged. The digital temperature controller is also activated when the pump is energized. If after 10 seconds the flow switch shuts off for any reason, the system will stop and must be manually re-energized. If the temperature controller calls for heating, then the compressor and the fans are energized.

D. In the heating mode, there is a defrost mode, which is based on the coil temperature, ambient temperature and the compressor run time. In the defrost mode, the direction of the refrigerant flow is reversed to direct hot refrigerant through the condensing coil to prevent the excessive frosting of the coil. The defrost mode is terminated when the temperature of the condensing coil exceeds the field-selectable termination temperature (50, 60, 70 or 80ºF). The maximum defrost time is 14 minutes. The default termination temperature is 70ºF, therefore, the defrost mode will terminate when the coil temperature reaches 70ºF. In a colder or more humid climate, the setting can be raised to ensure the defrosting of the coil. Similarly, in a warmer climate, the setting can be lowered so that the unit is not in the defrost mode longer than it needs to.

E. There is a five-minute time delay after each time the compressor is shut down. The pump will run continuously in the cooling and heating modes unless the flow switch opens or the power supply is disconnected.

3.3 INSTALLATION

A. The Unico Unichiller RC will be placed in the landscape, in accordance with the required clearances specified in the installation manual.

B. 1 ¼” insulated copper piping to be installed onto fittings in Unichiller RC.

C. Flexible outdoor electrical conduit will be run to provide electrical power to the unit, in accordance to the specifications designed in the installation manual

D. Separate B&G PL-36 pump to be installed outside of product to pump refrigerant chiller loop.

E. 40% propylene glycol, 60% water solution will be filled into the system in accordance to instructions specified in the installation manual.

END OF SECTION 23 81 43

SECTION 23 82 19 – FAN COIL UNIT

PART 1 - GENERAL

1.1 SUMMARY

A. Submittals:
   1. MH-200 Mechanical Closet Elevation
   2. MH-500 Fan Coil Unit Detail
   3. Product and performance data:

1.2 SYSTEM DESCRIPTION

A. Vertical, 2-pipe belt-driven fan coil unit. External parts are to be made with polyurethane based powder coated galvanealed, while internal parts are to be built from heavy gauge galvanized steel casing model fan coil unit for ducted installation above the ceiling, with full access to internal components.

B. Reference drawing schedules for performance and capacity information.

PART 2 - PRODUCTS

2.1 MANUFACTURER

A. Manufacturer Information: Magic Aire, 501 Galveston St., Wichita Falls, TX 76301; tel: (940) 397-2100; fax: (860) 998-1520; customer.service@magicaire.com

B. MATERIALS
   1. General: Factory-assembled, vertical, draw-thru type fan coil unit is suitable for ducted installation. Unit shall be complete with water, DX or steam coils; fans; motor; belt drive; drain pan; and filters.
   2. Casing: Construction shall be heavy gauge galvanealed steel, painted with baked on polyurethane based powder coating, colored beige, lined with one-in. thick fiberglass Exact-O-Kote thermal/acoustical insulation. Supply and return duct connections shall be approx. one inch long. Removable front panel shall be provided for access to the fan/motor assembly. A molded plastic double-sloped IAQ drain pan shall extend under the full length and width of the coils with a 3/4-in FPT connection.
   3. Fans: Belt-driven, double-width fan wheels shall have forward-curved blades and be statically and dynamically balanced. Fan drive shall consist of variable-pitch motor pulley, fixed-pitch fan pulley and V-belt. Fans and scrolls shall be of galvanized steel.
   4. Coils: Unit shall be equipped with a standard capacity 4-row CW. Water coils shall have 3/8-in. (sizes 08-30) and 1/2-in. (sizes 40) copper tubes with aluminum fins bonded to the tubes by mechanical expansion. Water coils shall have manual air vents. Coils shall have a minimum working pressure of 400 psig at 200 F. Each coil shall have sweat connections for copper tubes. Unit shall be equipped with a 4 row cooling/2-row hot water heating coils located in preheat position.
   5. Motor: Fan motor shall be open, drip-proof, single-speed, 60 Hz,1750 rpm 3-phase, suitable for continuous duty at 104-deg F (40 C) in 115
   6. Filters: 2” throwaway filters shall be installed in the unit.

7. Insulation: Units shall be equipped with 1-in. thick, 1.5-lbs/ft3, Exact-O-Kote™ insulation.
8. Model: Magic Aire BVE 08
9. Website: http://www.magicaire.com/upload/Submittals/BVE_Submittal_09262008.pdf

2.2 QUALITY ASSURANCE

A. Each coil shall be factory tested for leakage at minimum of 400 psig air pressure with coil submerged in water. Insulation and adhesive shall meet NFPA-90A requirements for flame spread and smoke generation

PART 3 - EXECUTION

3.1 INSTALLATION

A. Install equipment in accordance with manufacturer's instructions

B. Provide ceiling or wall brackets as required to meet the field mounting condition.

C. Level the unit and ensure proper condensate flow. Pipe condensate to nearest floor drain.

D. Provide clear access to the control panel and filter access door.

E. Pipe unit maintaining access to the serviceable parts.

3.2 START-UP PROCEDURES

A. After construction is completed, including painting if applicable, clean unit exposed surfaces.

B. Vacuum-clean terminal coils and inside of cabinets.

C. Clean factory-finished surfaces. Repair any marred or scratched surfaces with manufacturer's touch-up paint.

D. Verify adequate access for maintenance and clearance for filter pull.

E. Check power and control voltages.

F. Check rotation of fan.

G. Check calibration and operation of the controlling elements.

H. Check control valves for required close-off and fail position.

I. Install new filter units for terminals requiring same.

END OF SECTION 23 82 19

SECTION 25 13 16 - INTEGRATED AUTOMATION CONTROL AND MONITORING NETWORK INTEGRATION PANELS

PART 1 - GENERAL

1.1 SUMMARY

A. Submittals: Product data, construction document

B. Related Sections

1. Section 25 15 00 Integrated Automation Software

2. Section 25 50 00 Integrated Automation Facility Controls

1.2 SYSTEM DESCRIPTION

A. mPanels shall serve as touch-screen interfaces in all modules of the house. Entertainment, climate, and other automated features of the house shall be controlled from these panels.

PART 2 - PRODUCTS

2.1 MANUFACTURER

A. Embedded Automation, Inc. Suite 104, 7485, 130th Street, Surrey, BC V3W 1H8; tel: (604) 596-4999; fax: (604) 596-4933

B. MATERIALS
1. mPanel
2. http://www.embeddedautomation.com/mPanel%20Data%20Sheet.pdf

2.2 QUALITY ASSURANCE

A. Products shall be inspected immediately after opening manufacturer's packaging. Any defects or missing components shall be reported directly to manufacturer.

PART 3 - EXECUTION

3.1 INSTALLATION

A. Location of panels shall follow construction drawings.

B. Follow all manufacturer's instructions.

END OF SECTION 25 13 16

SECTION 25 15 00 – INTEGRATED AUTOMATION SOFTWARE

PART 1 - GENERAL

1.1 SUMMARY

A. Submittals: Product data, construction document

B. Related Sections

1. Section 25 13 16 Integrated Automation Control and Monitoring Network Integration Panels

2. Section 25 50 00 Integrated Automation Facility Controls

1.2 SYSTEM DESCRIPTION

A. Special software shall manage the house control systems for integration with home entertainment, HVAC, lighting, and other automated elements.

PART 2 - PRODUCTS

2.1 MANUFACTURER

A. Embedded Automation, Inc. Suite 104, 7485, 130th Street, Surrey, BC V3W 1H8; tel: (604) 596-4999; fax: (604) 596-4933

B. MATERIALS
1. mControl Digital Home Software
2. http://www.embeddedautomation.com/mControl v2 (Home Edition) Summary.pdf

2.2 QUALITY ASSURANCE

A. Products shall be inspected immediately after opening manufacturer's packaging. Any defects or missing components shall be reported directly to manufacturer.

PART 3 - EXECUTION

3.1 INSTALLATION

A. Location of panels shall follow construction drawings.

B. Follow all manufacturer's instructions.

END OF SECTION 25 15 00

SECTION 25 50 00 - INTEGRATED AUTOMATION FACILITY CONTROLS

PART 1 - GENERAL

1.1 SUMMARY

A. Submittals: Product data, construction document

B. Related Sections

1. Section 25 13 16 Integrated Automation Control and Monitoring Network Integration Panels

2. Section 25 15 00 Integrated Automation Software

1.2 SYSTEM DESCRIPTION

A. Facility controls shall provide necessary automation

PART 2 - PRODUCTS

2.1 MANUFACTURER

A. SmartLabs, 16542 Millikan Ave., Irvine, CA 92606; tel: (800) 762-7846

B. MATERIALS
1. SmartLabs
2. 2476S
3. http://www.smarthome.com/manuals/2476sqs.pdf

2.2 QUALITY ASSURANCE

A. Products shall be inspected immediately after opening manufacturer's packaging. Any defects or missing components shall be reported directly to manufacturer.

PART 3 - EXECUTION

3.1 INSTALLATION

A. Location of panels shall follow construction drawings.

B. Follow all manufacturer's instructions.

END OF SECTION 25 50 00

SECTION 26 05 00 – COMMON WORK RESULTS FOR ELECTRICAL

PART 1 - GENERAL

1.1 SUMMARY

A. Submittals: Product data, construction drawings

B. Related Electrical Components, Devices, and Accessories: Listed and labeled as defined in NFPA 70, by a qualified testing agency, and marked for intended location and application.

C. Regulatory requirements: compliance with UL 83

1.2 SYSTEM DESCRIPTION

A. Related Electrical Components, Devices, and Accessories: Listed and labeled as defined in NFPA 70, by a qualified testing agency, and marked for intended location and application.

PART 2 - PRODUCTS

2.1 MANUFACTURERS

A. General Electric, Fairfield, CT, 06825; tel: (203) 373-2211

B. PV Powered, INC. 150 SW Scalehouse Loop, Bend, OR 97702; tel: (541) 312-3832; fax: (541) 383-2348

C. Carlon, 8155 T&B Blvd, Memphis, TN 38125; tel: (901) 252-8000

D. ENCO, tel: 800-USE-ENCO

E. Pass & Seymour P.O. Box 4822, Syracuse, NY, 13221; tel: 1-800-776-4035

F. ERICO, tel: 1-800-853-0878

2.2 MATERIALS

A. General Electric & PV Powered inverters
   1. Model#PVP4800
   2. http://www.pvpowered.com/downloads/DataSheet-Residential-inverters.pdf

B. Grounding Materials
   1. Conductors: No. 6 AWG Solid Copper between photovoltaics, and No. 1 AWG service ground.
   2. Ground Rods: Galvanized; 5/8” in diameter.

C. ENCO Junction Box
   1. Model#SC1284

2. 12”x8”x4” Junction boxes used at module connections.

D. Tamper-Resistant Receptacle
1. Pass & Seymour
2. model#TR15LA
3. All receptacles in the house are tamper-resistant.
4. http://www.passandseymour.com/literature/pdf/SS1213_WireUP.pdf

E. Support and Anchorage Components
1. Cable Supports: ERICO cable grommets.

PART 3 - EXECUTION

3.1 GENERAL ELECTRICAL EQUIPMENT INSTALLATION REQUIREMENTS

A. Install electrical equipment in accordance with NEC 110, NEC 690, and all other relevant sections. Install electrical equipment in accordance with required clearances.

B. Install electrical equipment to allow maximum possible headroom unless specific mounting heights that reduce headroom are indicated.

C. Install electrical equipment to provide for ease of disconnecting the equipment with minimum interference to other installations.

D. Install electrical equipment to allow right of way for piping and conduit installed at required slope.

E. Comply with NECA 1.

3.2 RACEWAY AND CABLE INSTALLATION

A. Outdoor Raceways Applications:

1. Exposed or Concealed: LFMC, RMC.
2. Boxes and Enclosures: Metallic, 4” square when possible, NEMA 250, Type 3R or Type 4.

B. Conceal raceways and cables, unless otherwise indicated (instrumentation sensor wiring), within finished walls, ceilings, and floors.

C. Install raceways and cables at least 6 inches away from parallel runs of flues and steam or hot-water pipes. Locate horizontal raceway runs above water and steam piping.

D. Connect motors and equipment subject to vibration, noise transmission, or movement with a 72-inch maximum length of flexible conduit.

E. Install raceways and cables conceal within finished walls, ceilings, and floors unless otherwise indicated.

3.3 GROUNDING

A. Underground Grounding Conductors: Install bare copper conductor,[No. 2/0] AWG minimum. Bury at least 24 inches below grade.

B. Pipe and Equipment Grounding Conductor Terminations: Bolted.

C. Connections to Structural Steel: Ground lugs.

D. Install grounding conductors routed along shortest and straightest paths possible unless otherwise indicated or required by Code. Avoid obstructing access or placing conductors where they may be subjected to strain, impact, or damage.

E. Install ground rod driven into ground until tops are 2 inches below finished floor or final grade unless otherwise indicated. Install ground rod according to organizers' determination of location, Rule 4-3.

F. Make connections without exposing steel or damaging coating if any.

G. Install bonding straps and jumpers in locations accessible for inspection and maintenance, except where routed through short lengths of conduit.

3.4 IDENTIFICATION

A. Comply with NEC 690.64 for the labeling of load-side inverter breakers in load panel.

B. Warning Labels for Enclosures for Power and Lighting: Comply with 29 CFR 1910.145; identify system voltage with black letters on an orange background. Apply to exterior of door, cover, or other access.

C. Equipment Identification Labels:

1. Equipment to Be Labeled:

a. Panelboards, electrical cabinets, and enclosures.
b. Transformers.
c. Motor-control centers.
d. Enclosed circuit breakers.
e. Motor starters.
f. Power transfer equipment.
g. Terminals, racks, and patch panels for voice and data communication and for signal and control functions.

D. Install identification materials and devices at locations for most convenient viewing without interference with operation and maintenance of equipment.

E. Label location of boxes in walls based on circumferential distance from nearest structural steel member in the wall. Label boxes in dropped ceiling based on a Cartesian coordinate system from the center of a module.

3.5 INSTALLATION OF HANGERS AND SUPPORTS

A. Fasten hangers and supports securely in place, with provisions for thermal and structural movement. Install with concealed fasteners unless otherwise indicated.

B. Multiple Raceways or Cables: Install on trapeze-type supports fabricated with steel slotted channel.

C. Mounting and Anchorage of Surface-Mounted Equipment and Components: Anchor and fasten electrical items and their supports to building structural elements by the following methods, unless otherwise indicated or required by Code:
   1. To Wood: Cable staples.
   2. To Steel: Beam clamps.
   3. To Light Steel: Sheet metal screws.

END OF SECTION 26 05 00

SECTION 26 05 26 - GROUNDING AND BONDING FOR ELECTRICAL SYSTEMS

PART 1 - GENERAL

1.1 SUMMARY

A. Submittals: Product data, construction drawings

1.2 SYSTEM DESCRIPTION

A. A grounding kit is used as a safety device and acts as an electrical reference. It provides a low impedance path for excess current to flow back to the source and the current is safely shunted to ground before voltage can rise to lethal levels on any electrical component.

PART 2 - PRODUCTS

2.1 MANUFACTURER

A. PG&E; tel: 1-800-743-5000

B. MATERIALS
   1. Grounding Rod
   2. model#GR6258
   3. http://www.pge.com/includes/docs/pdfs/mybusiness/customerservice/startstop/newconstruction/greenbook/servicerequirements/013109.pdf.

PART 3 - EXECUTION

3.1 INSTALLATION

A. Grounding rod shall be mounted in the ground at 45-degree angle

END OF SECTION 26 05 26

SECTION 26 05 33.05 – RACEWAY AND BOXES FOR ELECTRICAL SYSTEMS

PART 1 - GENERAL

1.1 SUMMARY

A. Product data, construction drawings

B. Related Sections

1. Section 26 05 00 Common Work Results for Electrical

1.2 SYSTEM DESCRIPTION

A. Designs protect wire and make the electrical system less prone to electrocution.

B. Rigid metal conduit is used outside. EMT used for indoor purposes.

PART 2 - PRODUCTS

2.1 MANUFACTURER

A. Allied Electrical Group, 16100 South Lathrop Avenue, Harvey, IL, 60426; tel: (800) 882-5543

B. MATERIALS
1. EMT (Electrical Metallic Tubing) 1”, 1 ¼”
2. Model# E-Z Pull® EMT
3. Link to website: http://www.alliedtube.com/electrical-raceways/conduit/emt.asp
4. Rigid metal conduit 1 ½”
5. Model# Rigid Steel Conduit
6. Link to website: http://www.alliedtube.com/electrical-raceways/conduit/emt.asp

2.2 QUALITY ASSURANCE

A. Installer Qualifications: Installer should be experienced in performing work of this section and should have specialized in installation of work similar to that required for this project.

2.3 REGULATORY REQUIREMENTS

A. Conduit must be bent appropriately and used in respectively correct environments.

PART 3 - EXECUTION

3.1 INSTALLATION

A. Installed in accordance with NEC article 314

END OF SECTION 26 05 33.05

SECTION 26 09 23 – LIGHTING CONTROL DEVICES

PART 1 - GENERAL

1.1 SUMMARY

A. Submittals: Product Data

B. Related Sections

1. Section 26 51 00 Interior Lighting

1.2 SYSTEM DESCRIPTION

A. Control switches shall be used to control dimming effects of LED lighting.

PART 2 - PRODUCTS

2.1 MANUFACTURER

A. Kitchler Lighting 7711 East Pleasant Valley Road, P.O. Box 318010, Cleveland, Ohio 44131; tel: (866) 558-5706

B. MATERIALS
1. Modular LED Power Switch
2. 12350BK
3. http://www.kichler.com/consumer/products/detail/12350BK

2.2 QUALITY ASSURANCE

A. Products shall be examined after removal from manufacturer's packaging. Any damaged or missing components should be reported directly to the manufacturer.

PART 3 - EXECUTION

3.1 INSTALLATION

A. Installation shall follow manufacturer's instructions.

END OF SECTION 26 09 23

SECTION 26 22 13 – LOW VOLTAGE DISTRIBUTION TRANSFORMERS

PART 1 - GENERAL

1.1 SUMMARY

A. Submittals: Product data

B. Related Sections

1. Section 26 51 00 Interior Lighting
2. Section 26 51 13 Interior Lighting Fixtures, Lamps and Ballasts

1.2 SYSTEM DESCRIPTION

A. Low voltage transformers shall be integrated in the interior lighting system.

PART 2 - PRODUCTS

2.1 MANUFACTURER

A. WAC Lighting, 615 South Street, Garden City, NY 11530; tel: (516) 515-5000; fax: (516) 515-5050; email: sales@waclighting.com

2.2 PRODUCTS

A. 12V Ceiling Mounted Magnetic Transformer
1. LM-EN12-150M-CH
2. http://www.waclighting.com/USA/products/?categoryid=76&productid=345

B. Pro Series Transformer
1. 5PR7522
2. http://www.landscapelighting.com/portal/products/detail/15PR75SS

PART 3 - EXECUTION

3.1 INSTALLATION

A. Installation shall comply with all manufacturer's instructions.

END OF SECTION 26 22 13

SECTION 26 24 16 – PANELBOARDS

PART 1 - GENERAL

1.1 SUMMARY

A. Product data, construction drawings

B. Related Sections

1. Section 26 05 00 Common Work Results for Electrical

2. Section 26 24 16.20 Panelboards and Load Center Circuit Breakers

1.2 SYSTEM DESCRIPTION

A. Design distributes power to the house circuits and contains circuit breakers within the same enclosure, in order to provide protection for each circuit.

B. Design includes two separate panels; one for the inverters and a second panel for the additional house circuits.

PART 2 - PRODUCTS

2.1 MANUFACTURER

A. Schneider Electric, 1415 S. Roselle Road, Palatine, IL, 60067; Tel: 847-397-2600; Fax: 847-925-7500

B. Computerized Electricity Systems, 5, Arye Regev St., Netanya, Israel, 42505; Tel: 972(9)835-1194; Fax: 972(9)835-1197

2.2 C.MATERIALS

A. Square D Homeline Load Center
   1. Model # HOM1632L200TC
   2. http://ecatalog.squared.com/pubs/Electrical%20Distribution/Load%20Centers/Accessories,%20Homeline%20(HOM,%20LK,%20PK,%20QOM)/1170BR9601R1003.pdf
   3. 32 Maximum branch circuits
   4. 200A Mains Rating
   5. Ground Bar Included

B. CES Smart Distribution Panel
   1. Model # CSDP
   2. http://www.c-e-systems.com/index.php/ces-system/ces-smart-distribution-panel.html
   3. Design can connect and disconnect automatically upon current overload, short current surge detection or software command.

C. ACCESSORIES
   1. 30A breaker for the inverters.
   2. Model #HOM230
   3. Link to website: http://ecatalog.squared.com/pubs/Electrical%20Distribution/Load%20Centers/Accessories,%20Homeline%20(HOM,%20LK,%20PK,%20QOM)/1170BR9601R1003.pdf
   4. 2-pole common tip, 30A breaker

2.3 QUALITY ASSURANCE

A. Installer Qualifications: Installer should be experienced in performing work of this section and should have specialized in installation of work similar to that required for this project.

2.4 REGULATORY REQUIREMENTS

A. Both panels in the system must be grounded to a grounding electrode.

B. Panels must be installed with circuit breakers to provide a means of protection for each of the circuits.

PART 3 - EXECUTION

3.1 INSTALLATION

A. Installed with breakers in accordance with NEC article 240.

B. CES panel allows the installer to set up and define priorities for each output circuit and to determine load management and other settings based on the user's preferences.

END OF SECTION 26 24 16

SECTION 26 24 16.20 – PANELBOARD AND LOAD CENTER CIRCUIT BREAKERS

PART 1 - GENERAL

1.1 SUMMARY

A. Product data, construction drawings

B. Related Sections

1. Section 26 05 00 Common Work Results for Electrical
2. Section 26 24 16 Panelboards

1.2 SYSTEM DESCRIPTION

A. Design provides protection for the circuit from the load panel.

B. Performance requirements: Short circuit current rating of 22kA

PART 2 - PRODUCTS

2.1 MANUFACTURER

A. Schneider Electric, 1415 S. Roselle Rd., Paletine, IL, 60067; tel: (847) 397-2600; fax: (847) 925-7500

B. MATERIALS
1. Square D main breaker for the inverters.
2. Model # HOM230
3. Link to website: http://www.schneider-electric.us/products-services/product-detail/?event=productDetail&partNumber=QOM2150VH&countryCode=us
4. UL listed- CSA certified
5. 150A ampere rating
6. 240 VAC voltage rating
7. 2-pole, 1-phase breaker

2.2 QUALITY ASSURANCE

A. Installer Qualifications: Installer should be experienced in performing work of this section and should have specialized in installation of work similar to that required for this project.

2.3 REGULATORY REQUIREMENTS

A. Circuit breaker should be of correct rating for the circuit system.

PART 3 - EXECUTION

3.1 INSTALLATION

A. When wiring, use #4-300AWG/kcmil(Al/Cu) wire.

B. Install in accordance with NEC article 240.

END OF SECTION 26 24 16.20

SECTION 26 27 13 - ELECTRICITY METERING

PART 1 - GENERAL

1.1 SUMMARY

A. Submittals: Product Data and Shop Drawings included

1.2 SYSTEM DESCRIPTION

A. The electricity meter measures the amount of power that is being generated.

PART 2 - PRODUCTS

2.1 MANUFACTURER

A. The organizer will supply the meter and terminal box; the team will supply the meter housing and terminal box mounting panel; the meter housing is by Milbank Manufacturing Co. Milbank Manufacturing Co. PO Box 419028 Kansas City, MO 64141; tel 877-483-5314

B. MATERIALS

1. The meter provided by the organizer will be a utility grade meter that will either be a high-profile or low-profile meter, and its manufacturer will be of the organizer's choosing
2. The meter housing and terminal box mounting panel will be provided by the team. The meter housing should accept a standard 4-jaw, ringless, round, utility-grade socket meter for use with 240/120 V service. The mounting panel should be 42 in by 18 in and is constructed by the team
3. The meter housing is by Milbank Manufacturing Co. part number U9801-R http://www.milbankmfg.com/products/Catalogs/CatalogFiles/PDF/UNY.pdf#U9801-R

C. Modular Meter Center: Factory-coordinated assembly of a main service [terminal box with lugs only] [disconnect device], wireways, tenant meter socket modules, and tenant feeder circuit breakers arranged in adjacent vertical sections. Assembly shall be complete with interconnecting buses and other features as specified below:

1. Comply with requirements of utility company for meter center.
   Housing: wooden, 4 jaw, ringless meter housing to accept standard utility socket meter; team supplied and schematics included
2. Minimum Short-Circuit Rating: [22,000] A symmetrical at rated voltage.
3. Tenant Feeder Circuit Breakers: Series-combination-rated molded-case units, rated to protect circuit breakers in downstream tenant and to house loadcenters and panelboards that have 10,000-A interrupting capacity.
4. Meter Socket: Rating coordinated with indicated tenant feeder circuit rating.

2.2 QUALITY ASSURANCE

A. Installer Qualifications: Installer should be experienced in performing work of this section and should have specialized in installation of work similar to that required for this project

PART 3 - EXECUTION

3.1 DELIVERY, STORAGE & HANDLING

A. Ordering: through Friedman Electric.

3.2 INSTALLATION

A. Install equipment for utility company metering. Install raceways and equipment according to utility company's written requirements. Provide empty conduits for metering leads and extend grounding connections as required by utility company.

B. Install modular meter center according to NECA 400 switchboard installation requirements.

END OF SECTION 26 27 13

SECTION 26 27 26 – WIRING DEVICES

PART 1 - GENERAL

1.1 SUMMARY

A. Submittals: Product data

B. Related Sections

1. Section 26 05 00 Common Work Results for Electrical

1.2 SYSTEM DESCRIPTION

A. Wiring shall be used to connect various equipment to electrical loads. Wire has been chosen according to achieve simplicity of installation, and has been done in such a way so as to abide by the National Electric Code.

PART 2 - PRODUCTS

2.1 MANUFACTURERS

A. Leviton Manufacturing Co., 59-25 Little Neck Parkway, Little Neck, NY 11362-2591; tel: (800) 323-8920; fax: (800) 832-9538

B. Omni Cable, 2 Hagerty Blvd., West Chester, PA 19382; tel: (610) 701-0100

C. Lowes, North Wikesboror, NC 2865; tel: (800) 445-6937

D. Essex Electrical Supplied Ltd, 682 Green Lane Goodmayes, Ilford, Essex; telephone: (020) 8590-4443; fax: (020) 8599-7102

2.2 MATERIALS

A. Leviton THHN/THWN wire
   1. model# 8-12 AWG

B. Omni USE Service Entrance Wire
   1. model#M610ST-01
   2. http://www.omnicable.com/Product%20Catalog%20-%20Electronic%20Version-NEW-Secure.pdf

C. WIA SE Service Entrance Cable
   1. model#SEU2/0/500R

D. Lowes UF wire
   1. model# 1305592, I#70020

E. Lowes Low-Voltage wire
   1. model# RB509-500, I#144405

F. Essex Romex wire
   1. model# 8-2,10-2,12-2,14-2 UF-B W/G

2.3 PRODUCT DATA

A. http://electroniccomponents.globalspec.com/SpecSearch/PartSpecs?PartId={40036E0C-745B-459E-8297-338931913129}&VID=2930&Comp=4233

B. http://www.eisinc.com/Files/pdf/supplier_showcase_page_downloads/superioressex/Ultrashield_Plus_200_Magnet_Wire.pdf

PART 3 - EXECUTION

A. Leviton 12-14 AWG and Essex Romex shall be installed in the house; USE-2 12 AWG shall be installed on the Photovoltaic Arrays and the UF wire and Low-Voltage wire shall be installed in the landscape.

END OF SECTION 26 27 26

SECTION 26 31 00 - PHOTOVOLTAIC COLLECTORS

PART 1 - GENERAL

1.1 SUMMARY

A. Submittals: Product data, construction drawings

B. Related Sections

1. Section 05 43 00 Slotted Channel Framing

1.2 SYSTEM DESCRIPTION

A. The Photovoltaic Collectors, or Solar Panels, are to be installed on the roof of the house to collect solar power and convert that energy into energy that is to be used by the house

B. Performance Requirements: Peak power of 200 Watt at 26.3 Volts; designed for optimal use with grid-tied applications; compliance with NEC 690

PART 2 - PRODUCTS

2.1 MANUFACTURER

A. General Electric, Fairfield,Ct,06825; tel:(203) 373-2211

B. MATERIALS

1. General Electric Poly-crystalline, 200 Watt Photovoltaic Collectors; UL-1703, IEC – 616215
2. GEPVp-200-MS
3. http://www.gepower.com/prod_serv/products/solar/en/downloads/gea14807a_gepvp_200ms_600v.pdf

2.2 QUALITY ASSURANCE

A. Installer Qualifications: Installer should be experienced in performing work of this section and should have specialized in installation of work similar to that required for this project.

PART 3 - EXECUTION

3.1 INSTALLATION

A. Install devices onto Slotted Channel Framing.

B. Install shared grounding wires leading to grounding rod.

END OF SECTION 26 31 00

SECTION 26 51 00 – INTERIOR LIGHTING

PART 1 - GENERAL

1.1 SUMMARY

A. Submittals: Product data, warranty information, construction drawings

B. Related Sections
   1. Section 26 05 00 Common Work Results for Electrical
   2. Section 26 51 13 Interior Lighting Fixtures, Lamps, and Ballasts

1.2 SYSTEM DESCRIPTION

A. Overall, simple and elegant electric lighting throughout the house compliments the architectural intent and provides appropriate lighting levels for domestic life. Flexibility of lighting conditions, provided by multiple fixtures and switches, adds to the overall flexible character of the distinctively programmed modular spaces.

PART 2 - PRODUCTS

2.1 MANUFACTURER

A. WAC Lighting, 615 South Street, Garden City, NY 11530; tel: (516) 515-5000; fax: (516) 515-5050; email: sales@waclighting.com

2.2 SUPPLIER

A. Friedman Electric, 245 Cecil A. Malone Drive, Ithaca, NY 14850; tel: (607) 256-7700; fax: (607) 256-7708

2.3 SOLARAIL TRACK LIGHTING PRODUCTS

A. Standoff Supports
   1. LM-X5 Standoff
   2. http://www.waclighting.com/USA/products/search/?searchtype=1&keyword=LM-X5&go=Go!&restrict=waclighting_com

B. Quick Connect, Threaded Male Adapter
   1. LM- QADP
   2. http://www.waclighting.com/USA/products/?categoryid=139&productid=312

C. Monorail Sections
   1. LM-T8; LM-T4
   2. http://www.waclighting.com/USA/products/?categoryid=36&productid=314

D. Connector with Electric Continuity

1. LM-I
2. http://www.waclighting.com/USA/products/?categoryid=36&productid=305

E. Connector without Electric Continuity
1. LM-IDEC
2. http://www.waclighting.com/USA/products/?categoryid=36&productid=306

2.4 KITCHEN PENDANT LIGHTING

A. Quick Connect Surface Mount Canopy (Metal)
1. QMP-M1RN-TR-CH
2. http://www.waclighting.com/USA/products/?categoryid=72&productid=530

PART 3 - EXECUTION

3.1 DELIVERY, STORAGE & HANDLING

A. All products must be inspected upon delivery to ensure no damage occurred during shipping.

3.2 INSTALLATION

A. All products shall be installed according to manufacturer's instructions.

END OF SECTION 26 51 00

SECTION 26 51 13 – INTERIOR LIGHTING FIXTURES, LAMPS, AND BALLASTS

PART 1 - GENERAL

1.1 SUMMARY

A. Submittals: Product data, warranty information, construction drawings

B. Related Sections
   1. Section 26 05 00 Common Work Results for Electrical
   2. Section 26 51 00 Interior Lighting

1.2 SYSTEM DESCRIPTION

A. Overall, simple and elegant electric lighting throughout the house compliments the architectural intent and provides appropriate lighting levels for domestic life. Flexibility of lighting conditions, provided by multiple fixtures and switches, adds to the overall flexible character of the distinctively programmed modular spaces.

PART 2 - PRODUCTS

2.1 MANUFACTURERS

A. WAC Lighting, 615 South Street, Garden City, NY 11530; tel: (516) 515-5000; fax: (516) 515-5050; email: sales@waclighting.com

B. C. Crane Company, Inc., 1001 Main Street, Fortuna, CA 95540-2008; tel: (800) 522-8863; fax: (707) 725-9060

C. Forecast Lighting, 1600 Fleetwood Drive, Elgin, IL 60123; tel: (847) 622-0416; fax: (847) 622-2542

D. Y Lighting LLC; tel: (866) 428-9289; website: http://www.ylighting.com

2.2 SUPPLIERS

A. Friedman Electric, 245 Cecil A. Malone Drive, Ithaca, NY 14850; tel: (607) 256-7700; fax: (607) 256-7708

B. Design Within Reach, 225 Bush Street, 20th Floor, San Francisco, CA 94104; tel: (415) 248-5397; fax: (800) 846-0411

2.3 SOLARAIL TRACK LIGHTING PRODUCTS

A. Track Hung Spot Light Fixture
   1. TELAS QF-182X6- CH
   2. http://www.waclighting.com/USA/products/?categoryid=33&productid=721

B. MR-16 LED Bulb
   1. #MRWW
   2. http://www.ccrane.com

C. Threaded Male Adapter
   1. #LM2-QADP
   2. http://www.waclighting.com/USA/products/?categoryid=359

2.4 KITCHEN PENDANT LIGHTING

A. Glass Pendant Fixture, MR-16 bi pin Lamp Included
   1. MINNI QP-912
   2. http://www.waclighting.com/USA/products/?categoryid=214&productid=201

B. 300W Magnetic Remote Magnetic Transformer
   1. SRT-300M-12V
   2. http://www.waclighting.com/USA/products/?categoryid=214&productid=377

2.5 BATHROOM LIGHTS

A. Satin Nickel Bathroom Light Fixture
   1. Edge Slim F3506-36U
   2. http://forecastltg.com/index.jsp?&A=6&B=9&ITEM=1618

B. 24W Type T5 High Output Flourescent Tube, Mini bi pin base
   1. http://www.lowes.com/lowes/lkn?action=productDetail&productId=114806-37

2.6 LIVING ROOM TASK LIGHT

A. Tolomeo Wall Light Fixture (With Arms)
   1. http://www.ylighting.com/art-tolwall.html

B. GeoBulb LED Light Bulb (Cool White)
   1. #2CW
   2. http://www.ccrane.com/lights/led-light-bulbs/geobulb-led-light-bulb.aspx

2.7 BEDROOM RECESSED DOWNLIGHTS

Office 2004 Test Drive ..., 6/2/09 3:43 AM
Comment: specify

PART 3 - EXECUTION

3.1 DELIVERY, STORAGE & HANDLING

A. All products must be inspected upon delivery to ensure no damage occurred during shipping.

3.2 INSTALLATION

A. All products shall be installed according to manufacturer's instructions.

END OF SECTION 26 51 13

SECTION 26 55 29-- UNDERWATER LIGHTING

PART 1 - GENERAL

1.1 SUMMARY

A. Submittals: Product data, Photometric guide, and Construction documents

B. Related Sections

1. Section 26 56 26 LANDSCAPE LIGHTING

1.2 SYSTEM DESCRIPTION

A. The underwater lights will illuminate the NFT plants from the troughs and also be placed in the water feature to light up the urn at night. The hope is that the lights will give off a subtle glow during the evening hours.

PART 2 - PRODUCTS

2.1 MANUFACTURER

A. Kichler® Lighting, 7711 East Pleasant Valley Road P.O. Box 318010 Cleveland, Ohio 44131-8010; email: Landscape@Kichler.com; website: http://www.landscapelighting.com/

2.2 MATERIALS

A. LED Light Emitting Diode - Underwater LED 12V
1. PART NUMBER 15700BK
2. http://www.landscapelighting.com/portal/products/detail/15700BK

B. LED Underwater Base
1. PART NUMBER 15775BK5
2. http://www.landscapelighting.com/portal/products/detail/15775BK5

2.3 QUALITY ASSURANCE

A. Installer Qualifications: Installer should be experienced in performing work of this section and should be a certified electrician and experienced in installation of work similar to that required for this project.

B. All accessories to be as furnished or recommended by the fixture manufacturer.

2.4 REGULATORY REQUIREMENTS

A. Fixture shall be recognized for compliance with International Building Code in a current ICC ES evaluation report

PART 3 - EXECUTION

3.1 DELIVERY, STORAGE & HANDLING

A. Products should be ordered to arrive on site for installation before the plant material is installed.

B. Light fixtures should be stored in a clean and dry environment until they are installed.

3.2 INSTALLATION

A. Wire and install lights as to manufactures specifications.

B. Mount the bracket inside the troughs making sure to cut the rockwool out of the way before installation.

C. Mount the fixtures to the bracket inside the troughs making sure to run the wire so it can not be seen by people on the ramp of the house.

END OF SECTION 26 55 29

SECTION 26 56 23—AREA LIGHTING

PART 1 - GENERAL

1.1 SUMMARY

A. Submittals: Product data, Photometric guide, and Construction documents

B. Related Sections

1. Section 26 56 26 Landscape Lighting

1.2 SYSTEM DESCRIPTION

A. The column lights will be mounted in the courtyard and serve to provide subtle lighting to the area. They are mounted to the four inch steel columns 10 feet off the finish floor height of the courtyard.

PART 2 - PRODUCTS

2.1 MANUFACTURER

A. VISTA PROFESSIONAL OUTDOOR LIGHTING,1625 Surveyor Ave. • Simi Valley, CA 93063 Phone: (805) 527-0987 • (800) 766-8478 Fax: (888) 670-8478 Email: email@vistapro.com ; website: http://www.vistapro.com/

2.2 MATERIALS

A. 12-Volt Series: Specialty Lights column mounted light.
1. PART NUMBER 2222
2. http://www.vistapro.com/Product.aspx?ProdID=130&CatID=1&typeID=4

B. Incandescent T5 Wedge
1. PART NUMBER LN-921
2. http://www.vistapro.com/lampGuide.aspx

2.3 QUALITY ASSURANCE

A. Installer Qualifications: Installer should be experienced in performing work of this section and should be a certified electrician and experienced in installation of work similar to that required for this project.

B. All accessories to be as furnished or recommended by the fixture manufacturer.

2.4 REGULATORY REQUIREMENTS

A. Fixture shall be recognized for compliance with International Building Code in a current ICC ES evaluation report

PART 3 - EXECUTION

3.1 DELIVERY, STORAGE & HANDLING

A. Products should be ordered to arrive on site for installation before the plant material is installed.

B. Light fixtures should be stored in a clean and dry environment until they are installed.

3.2 INSTALLATION

A. Wire and install lights as to manufactures specifications.

B. The lights should be mounted 10 feet of the finish deck height in the courtyard. See plan for locations.

C. Extra care should be taken to run the wire so it is out of sight when ever possible.

D. Follow mounting instructions provided with product for assemble on the columns.

END OF SECTION 26 56 23

SECTION 26 56 26-- LANDSCAPE LIGHTING

PART 1 - GENERAL

1.1 SUMMARY

A. Submittals: Product data, Photometric guide, and Construction documents.

1.2 SYSTEM DESCRIPTION

A. The transformer and driver serve to power the underwater, accent, and ramp lights in the landscape. The transformer will be wired into all the lights and the drivers will each house 10 LED lights and then be wired into the transformer.

PART 2 - PRODUCTS

2.1 MANUFACTURER

A. Kichler® Lighting, 7711 East Pleasant Valley Road P.O. Box 318010 Cleveland, Ohio 44131-8010; email: Landscape@Kichler.com; website: http://www.landscapelighting.com/

2.2 MATERIALS

A. Transformer - Pro Series - Transformer 75W Pro Series
   1. PART NUMBER 15PR75SS
   2. http://www.landscapelighting.com/portal/products/detail/15PR75SS

B. Accessory Driver 40W DC
   1. PART NUMBER 15760BK
   2. http://www.landscapelighting.com/portal/products/detail/15760BK

C. Accessory Cable 12ga 100 ft
   1. PART NUMBER 15501BK
   2. http://www.landscapelighting.com/portal/products/detail/15501BK

2.3 QUALITY ASSURANCE

A. Installer Qualifications: Installer should be experienced in performing work of this section and should be a certified electrician and experienced in installation of work similar to that required for this project.

B. All accessories to be as furnished or recommended by the fixture manufacturer.

2.4 REGULATORY REQUIREMENTS

A. Fixture shall be recognized for compliance with International Building Code in a current ICC ES evaluation report

PART 3 - EXECUTION

3.1 DELIVERY, STORAGE & HANDLING

A. Products should be ordered to arrive on site for installation before the plant material is installed.

B. Light fixtures should be stored in a clean and dry environment until they are installed.

3.2 INSTALLATION

A. The transformer will power all the lights in the landscape and should be wired according to manufactures installation instructions.

B. The drivers will be wired to the LED sting lights which will heavily reduce the amount of wattage needed to power them. It should also be installed per manufactures instructions.

END OF SECTION 26 56 26

SECTION 26 56 33--WALKWAY LIGHTING

PART 1 - GENERAL

1.1 SUMMARY

A. Submittals: Product data, Photometric guide, and Construction documents.

B. Related Sections

1. Section 26 56 26 LANDSCAPE LIGHTING

1.2 SYSTEM DESCRIPTION

A. The ramp lighting will serve to illuminate the ramp during the evening hours. Ten LED lights will be mounted to the column posts out on the ramp, which will provide ample lighting. The LEDs should be arranged so they spread an even light over the entire ramp.

PART 2 - PRODUCTS

2.1 MANUFACTURER

A. Kichler® Lighting, 7711 East Pleasant Valley Road P.O. Box 318010 Cleveland, Ohio 44131-8010; email: Landscape@Kichler.com; website: http://www.landscapelighting.com/

2.2 MATERIALS

A. LED Light Emitting Diode - Accent LED 12V 5-String
1. PART NUMBER 15715BK
2. http://www.landscapelighting.com/portal/products/detail/15715BK

B. Accessory Flange Mt
1. PART NUMBER 15771BK5
2. http://www.landscapelighting.com/portal/products/detail/15771BK5

2.3 QUALITY ASSURANCE

A. Installer Qualifications: Installer should be experienced in performing work of this section and should be a certified electrician and experienced in installation of work similar to that required for this project.

2.4 All accessories to be as furnished or recommended by the fixture manufacturer

2.5 REGULATORY REQUIREMENTS

A. Fixture shall be recognized for compliance with International Building Code in a current ICC ES evaluation report

PART 3 - EXECUTION

3.1 DELIVERY, STORAGE & HANDLING

A. Products should be ordered to arrive on site for installation before the plant material is installed.

B. Light fixtures should be stored in a clean and dry environment until they are installed.

3.2 INSTALLATION

A. Wire and install lights as to manufactures specifications.

B. The mounted brackets should be installed to the vertical angle iron beams that act as the posts for railings. These should be installed via manufactures specifications.

C. The light fixtures should be installed onto these and the wire should run on the back side of the railings posts so it is out of sight.

END OF SECTION 26 56 33

SECTION 26 56 36—FLOOD LIGHTING

PART 1 - GENERAL

1.1 SUMMARY

A. Submittals: Product data, Photometric guide, and Construction documents.

B. Related Sections

1. Section 26 56 26 Landscape Lighting

1.2 SYSTEM DESCRIPTION

A. The floodlights will up-light the cylinders from the landscape. The light spread of the fixtures will be 60 degrees wide, which will enable two lights to illuminate a cylinder. The LEDs give a warm off white color that is not to sharp or bright for this use.

PART 2 - PRODUCTS

2.1 MANUFACTURER

A. Kichler® Lighting, 7711 East Pleasant Valley Road P.O. Box 318010 Cleveland, Ohio 44131-8010; email: Landscape@Kichler.com; website: http://www.landscapelighting.com/

2.2 MATERIALS

A. Accent LED 8.5W 60 degree wide
1. PART NUMBER 15753AZT
2. http://www.landscapelighting.com/portal/products/detail/15751AZT

B. Accessory Mounting Flange
1. PART NUMBER 15601AZT
2. http://www.landscapelighting.com/portal/products/detail/15601AZT

2.3 QUALITY ASSURANCE

A. Installer Qualifications: Installer should be experienced in performing work of this section and should be a certified electrician and experienced in installation of work similar to that required for this project.

2.4 REGULATORY REQUIREMENTS

A. Fixture shall be recognized for compliance with International Building Code in a current ICC ES evaluation report

PART 3 - EXECUTION

3.1 DELIVERY, STORAGE & HANDLING

A. Products should be ordered to arrive on site for installation before the plant material is installed.

B. Light fixtures should be stored in a clean and dry environment until they are installed.

3.2 INSTALLATION

A. Wire and install lights as to manufactures specifications.

B. The mounted brackets should be installed on the plywood in the landscape where specified in the exterior lighting plan.

C. The lights should be arranged to give a light wash to the exterior of the house.

END OF SECTION 26 56 36

SECTION 28 31 46 SMOKE DETECTION CENTERS

PART 1 - GENERAL

1.1 SUMMARY

A. Submittals: Product data, diagrams

1.2 System Description

A. A smoke detection center is needed as a warning measure against fire. Another name for this device is a fire or smoke alarm, and it emits a warning signal when it detects smoke that arises from a fire. It is to be placed inside the house so that it can warn its inhabitants if a fire should arise.

B. Performance Requirements: 120V AC, 60 Hz wire in with 9V battery backup. Must be operated in the temperature ranges of 40°F – 100°F (4°C – 48°C). It should meet the requirements of UL217, CSFM, NFPA 72, NFPA 101, ICC.

PART 2 - PRODUCTS

2.1 MANUFACTURER

A. BRK Brands, Inc., 3901 Liberty Street Road, Aurora, Illinois 60504; tel: (630) 851-7330

B. MATERIALS
   1. Part Number: 9120 B
   2. Link to Website: http://www.brkelectronics.com/pdfs/2009/04/08/1b7a1ebd.pdf

PART 3 - EXECUTION

3.1 INSTALLATION

A. Installation of this smoke alarm must conform to all local electrical codes an Article 760 of the National Electrical Code (NFPA 70) and NFPA 72

B. Interconnected units must meet the following requirements: total length of wire interconnecting units should be less than 1000 feet, be #18 gauge or larger and be rated at least 300V. It is recommended that all units be on the same fuse of circuit breaker. If local codes do not permit, be sure that the neutral wire is common to both phases

END OF SECTION 28 31 46

SECTION 31 32 00 – SOIL STABILIZATION

PART 1 - GENERAL Stabilization

1.1 SUMMARY

A. Submittals: Construction documents and product data.

B. Related Sections

1. Section 22 12 00 Potable Water Tanks

2. Section 22 13 53 Sanitary Sewage

1.2 SYSTEM DESCRIPTION

A. The plastic sheeting and straw wattle sit underneath any aspect of the house that contains water or has the possibility of spilling. This system of plastic draped over the straw wattle will serve to prevent any spills or leaks onto the mall.

PART 2 - PRODUCTS

2.1 MANUFACTURER

A. North American Green 5401 St. Wendel-Cynthiana Road Poseyville, IN 47633. Phone: (800) 772-2040; Email: customerservice@nagreen.com; Website: www.nagreen.com

2.2 MATERIALS

A. Husky 4 Mil, 10 Ft. x 100 Ft. Clear Polyethylene Sheeting Roll
1. CFHK0410C
2. http://www.homedepot.com/webapp/wcs/stores/servlet/ProductDisplay?storeId=10051&langId=-1&catalogId=10053&productId=100651787

B. 9” in Diameter 100% straw fiber Wattle
1. WS- 9
2. http://www.nagreen.com/technical-resources/product-specifications.php

2.3 QUALITY ASSURANCE

A. Installer Qualifications: Installer should be experienced in performing work of this section and should have specialized in installation of work similar to that required for this project..

PART 3 - EXECUTION

3.1 DELIVERY, STORAGE & HANDLING

A. The straw wattles and plastic should be on site before assemble of the house on the mall.

B. Keep straw wattles indoors to prevent moister adsorption.

3.2 INSTALLATION

A. Lay out wattles according to the containment plan in the construction document set.

B. Once wattles are laid down line the area with the plastic sheeting making sure that there is significant overlap of the sheeting with the wattle to prevent breaches.

END OF SECTION 31 32 00

SECTION 32 82 00 - IRRIGATION PUMPS

PART 1 - GENERAL

1.1 SUMMARY

A. Submittals: Product data, construction documents

B. Related Sections

1. Section 22 14 00 Facility Storm Drainage
2. Section 22 52 00 Fountain Plumbing System
3. Section 22 13 53 Facility Sewage Tanks

1.2 SYSTEM DESCRIPTION

A. The irrigation pump will provide the necessary pressure to run a hose to water the plants in the landscape.

B. Performance Requirements: The irrigation pump will be required to provide enough water to water plants with a steady stream of water through 100 feet of hose.

PART 2 - PRODUCTS

2.1 MANUFACTURER

A. Aquascape, 901 Aqualand Way St Charles, IL 60174; telephone: (866)- 877-6637; fax: (877) 329- 2340; website: www.aquascapeinc.com

2.2 MATERIALS

A. ¼ hp Booster Pump.
1. PART NUMBER 30084
2. http://www.aquascapeinc.com/consumer

B. Booster Pump Plumbing Kit.
1. PART NUMBER: 30170
2. http://www.aquascapeinc.com/consumer

C. Gardner Bender 48 In. Natural Nylon Heavy-Duty Cable Ties to be used to tie the PVC lines to the scaffolding.
1. PART NUMBER: 46-448
2. http://www.homedepot.com/webapp/wcs/stores/servlet/ProductDisplay?storeId=10051&langId=-1&catalogId=10053&productId=100094240

D. ½" WFV Poly Pipe
1. PART NUMBER: 29470

2. http://www.aquascapeinc.com/consumer

E. PVC Tee Fitting
1. PART NUMBER: 99190
2. http://www.aquascapeinc.com/consumer

2.3 QUALITY ASSURANCE

A. Installer Qualifications: Installer should be experienced in performing work of this section and should have specialized in installation of work similar to that required for this project.

PART 3 - EXECUTION

3.1 DELIVERY, STORAGE & HANDLING

A. Pump and accessories should be ordered with enough lead-time to arrive on site to be installed before the plant material.

B. Store in safe and secure place out of the way of construction activity.

3.2 INSTALLATION

A. The booster pump should be installed via manufactures guide lines.

B. Refer to Section 22 14 00 Facility Storm Drainage, Section 22 52 00 Fountain Plumbing System, and Section 22 13 53 Facility Sewage Tanks for instructions on how to install the system.

C. The booster pump will feed out of the AquaShure 3000 located in the water holding tank. The line will T off and when needed the booster pump will kick on to provide water capabilities to the site.

END OF SECTION 32 82 00

SECTION 32 90 23 – PLANTS AND BULBS

PART 1 - GENERAL

1.1 SUMMARY

A. Submittals: General: Submit each item in this Article according to the Conditions of the Contract and Division 1 Specifications Sections.

1. Product certificated signed by manufactures certifying that their products comply with specified requirements.

   a. Manufacture's certified analysis for standard products.

   b. Analysis for other materials by recognized laboratory made according to the methods established by the Association of Official Analytical Chemists, wherever applicable.

   c. Label Data substantiating that plants and planting material comply with specified requirements.

2. Samples of each of the following:

   a. 1 lb of texture of stone required for Project, in labeled plastic bags.

   b. Edging materials and accessories to verify color selected.

3. Qualifications data for firms and persons specified in the "Quality Assurance" Article to demonstrate their capabilities and experience. Include list of complete projects with project names and address, names and address of architects and owners, and other information specified.

4. Material test reports from qualified independent testing agency indicated and interpreting test results relative to compliance of the following materials with requirements indicated.

   a. Analysis of imported topsoil.

5. Planting schedule indicated anticipated dates and locations for each type of planting.

6. Maintenance instructions recommending procedure to established by Owner for maintenance of planting during the entire year. Submit before expiration of required maintenance periods.

1.2 SYSTEM DESCRIPTION

A. The plants will help to convey the post agrarian look of the hose. The plants will serve to hide the foundation of the house and hide the tanks for the house as well provide a pleasing esthetic to look over while in the courtyard. There will be over 1000 potted plants in the landscape for the house.

PART 2 - PRODUCTS

2.1 MANUFACTURER

A. Perennial Market; 1122 E. Welsh Road Ambler, PA 19002; tel: (877) 766-8748; fax: (215) 628-0216; Website: PerennialMarket.com

B. MATERIALS
1. PLANT MATERIALS
2. Perennials: Provide healthy, field-grown plants from a commercial nursery, of species and variety shown or listed.
a. Purple Osier (*Salix purpurea* 'Nana'): 3 gallon pot size.
b. Reed Grass (*Calamagrotsis x acutifolia* 'Karl Forester'): 3 gallon pot size.
c. Blue Spirea (*Caryopteris x clandonensis*): 3 gallon pot size.
d. Fountain Grass (*Pennisetum alopecuroides* 'Cassian'): 3 gallon pot size.
e. Purple Thee-Awn (*Aristida purpurea*): 3 gallon pot size.
f. Purpletop (*Tridens flavus*): 3 gallon pot size.

3. TOPSOIL
a. Topsoil: ASTM D 5268, fertile, friable, naturally loamy, pH range of 5.5 to 7, 4 percent organic material minimum, free of stones 1 inch or larger in any dimension, and other extraneous materials harmful to plant growth.
4. FERTILIZER
a. Slow-Release Fertilizer: Granular fertilizer consisting of 50 percent water-insoluble nitrogen, phosphorus, and potassium in the following composition:
1) Composition: 20 percent nitrogen, 10 percent phosphorous, and 10 percent potassium, by weight.

2.2 QUALITY ASSURANCE

A. Installer Qualifications: Engage an experienced Installer who has completed plantings similar in material, design, and extend to that indicated for this Project and with a record of successful establishments.

1. Installer's Field Supervisor: Require Installer to maintain an experienced full-time supervisor on the Project site during times that planting is in progress.

B. Testing Agency Qualifications: To qualify for acceptance, an independent testing agency must demonstrate to Architect's satisfaction, based on evaluation of agency-submitted criteria conforming to ASTM E 699, that it has the experience and capability to satisfactorily conduct the testing indicated without delaying the Work.

C. Provide quantity, size, genus, species, and variety of plants indicated, complying with applicable requirements of ANSI Z60.1 "American Standard for Nursery Stock."

D. Topsoil Analysis: Furnish a soil analysis made by qualified independent soil-testing agency stating percentages of organic matter, inorganic matter (silt, clay, and sand), deleterious material, PH, and mineral and plant-nutrient content of topsoil.

1. Report suitability of topsoil for growth of applicable planting material. State recommended quantities of nitrogen, phosphorus, and potash nutrients and any

limestone, aluminum sulfate, or other soil amendments to be added to produce a satisfactory topsoil.

E. Preinstallation Conference: Conduct conference at Project Site to comply with requirements of Division 1 Section "Project Meetings."

PART 3 - EXECUTION

3.1 DELIVERY, STORAGE & HANDLING

A. Coordinate installation of planting materials during normal planting seasons for each type of plant material required.

B. Packaged Materials: Deliver packaged materials in containers showing weight, analysis, and name of manufacturer. Protect materials from deterioration during delivery and while stored at site.

C. Deliver plants after preparations for planting have been completed and install immediately. If plating is delayed, heel-in bare-rooted or freshly dug plants in bed containing adequate peat moss, or other suitable moisture holding material, to keep roots moist. Separate bundles and trim roots, if long or damaged, using sharp pruning shears. Place plants in flats, pots, or other containers in sheltered location protected from sun, wind, and mechanical damage, and keep roots moist using fine-mist spray.

3.2 INSTALLATION

A. Protect structures, utilities, sidewalks, pavements, and other facilities, trees, shrubs, and plantings from damage caused by planting operations.

B. Provide erosion-control measures to prevent erosion or displacement of soils and discharge of soil-bearing water runoff or airborn dust to adjacent properties and walkways.

3.3 PLANTING SOIL PREPARTION

A. Before mixing, clean topsoil of roots, plants, sod, stones, clay lumps, and other extraneous materials harmful to plant growth.

B. Mix soil amendments and fertilizers with topsoil at rates specified. Delay mixing fertilizer if planting does not follow placing of plating soil within a few days.

1. A "Planting Soil Amendments Schedule" is included at the end of this section.

C. Mix planting soil either prior to planting or apply on surface of topsoil and mix thoroughly before planting.

3.4 PLANTING BED PREPARATION

A. Prepare planting beds in frost-free and relatively dry ground.

B. Loosen sub grade of planting bed areas to minimum depth of 6 inches. Remove stones larger then 1-1/2 inches in any dimension, and sticks, roots, rubbish, and other extraneous materials.

1. Mix soil amendments and fertilizers with topsoil at rates specified. Delay mixing fertilizer if panting does not follow placing of planting soil within a few days.

C. Spread plaint soil mixture to depth required to meet thickness, grade, and elevations shown, after light rolling and natural settlement. Do not place frozen material or soil if subgrade is frozen. Place approximately ½ the thickness of planting soil mixture required. Work into top of loosened subgrade to create a transition layer and then place remainder of planting soil mixture.

D. Till soil in beds to a minim depth of 8 inchs and mix with specified soil amendments and fertilizers.

E. Remove soil to a minimum of 8 inches and replace with prepared planting soil.

3.5 PLANT MATERIAL INSTALLATION

A. Lay out individual ground cover and plant locations and areas of multiple planting. Stake locations, outline areas, and secure Architect's acceptance before starting planting work. Make minor adjustments to layout as may be requested by Architect.

B. Dig holes large enough to allow spreading of roots, and backfill with planting soil.

C. Work soil around roots to eliminate air pickets and leave a slight saucer indentation around plants to hold water.

D. Water thoroughly after planting, taking care not to cover plant crowns with wet soil.

E. Protect plants from hot sun and wind; remove protection when plants show evidence of recovery from transplanting shock.

END OF SECTION 32 93 00

Structural Drawings & Calculations

All structural drawings and calculations have been completed and mailed to the Department of Energy, postmarked Friday, December 12, 2008 from:

ROBERT SILMAN ASSOCIATES
Structural Engineers
88 University Place
New York, NY 10003
Phone: (212) 620-7970

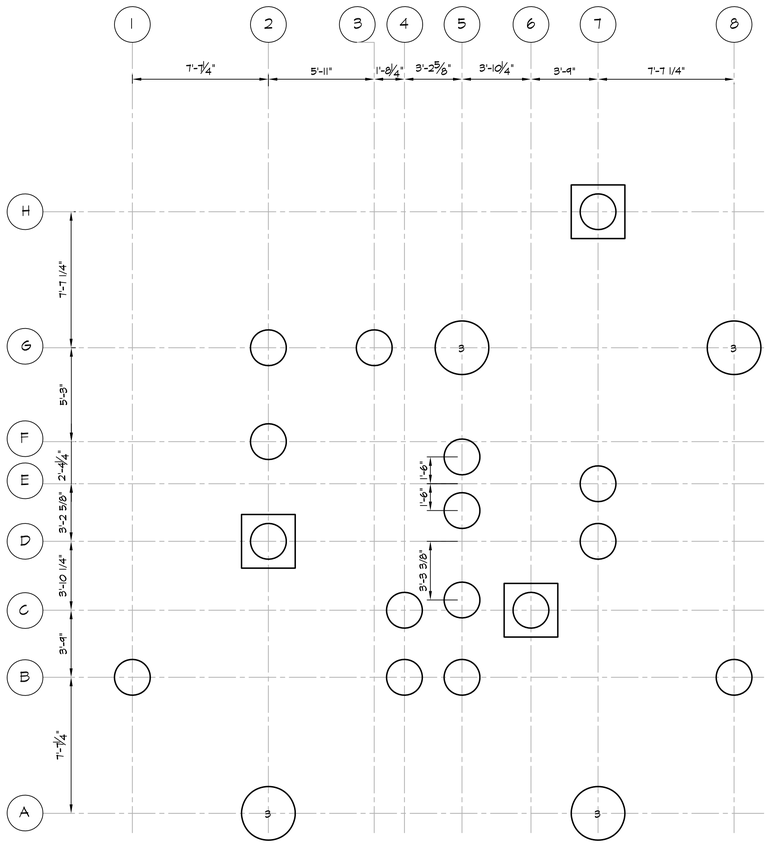

FOOTING PLAN

SCALE: 1/4"=1'-0"

1 / S1.0

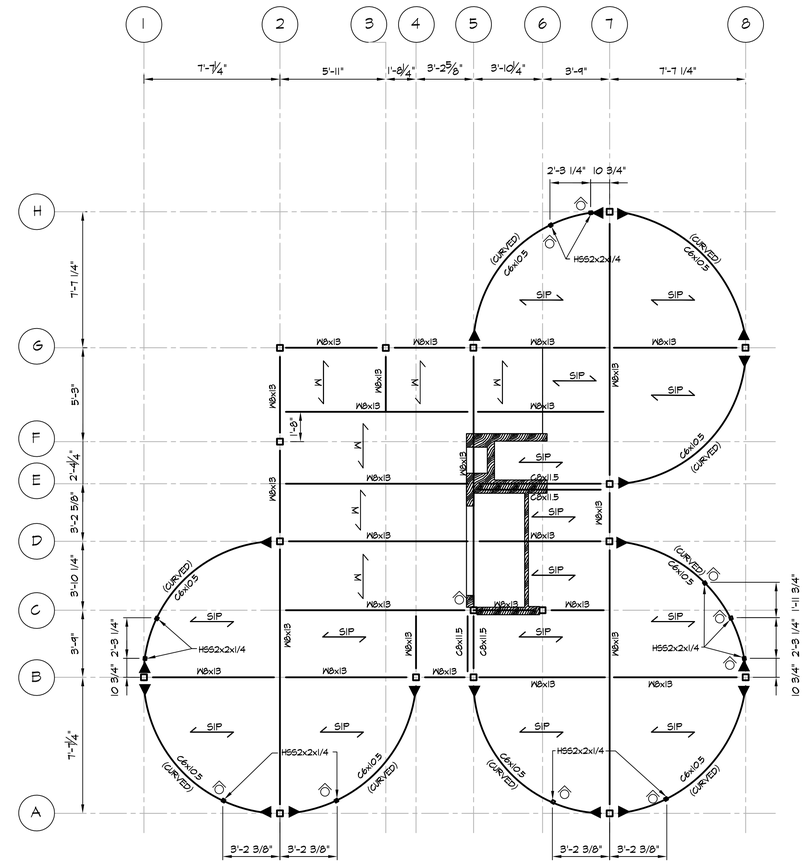

GROUND FLOOR FRAMING PLAN

SCALE: 1/4"=1'-0"

2 / S1.0

NOTES:

1. ALL 2'-0" DIAMETER FOOTERS WILL USE ELLIS TIMBERJACK TJ4 SCREW JACKS.
2. ALL 3'-0" DIAMETER FOOTERS WILL USE ELLIS TIMBERJACK TJ6 SCREW JACKS.

LEGEND

- ○ INDICATES 2'-0" DIAMETER x ¾" THCK. ALUMINUM FOOTER
- ③ INDICATES 3'-0" DIAMETER x ¾" THCK. ALUMINUM FOOTER
- □ INDICATES 3'-0"x3'-0" ¾" PLYWOOD BELOW ALUMINUM FOOTER

NOTES:

1. THIS STRUCTURE HAS BEEN DESIGNED FOR THE USE IN A TEMPORARY EXHIBITION USING THE DESIGN CRITERIA LISTED IN THE GENERAL NOTES ON S2.0. IF THIS STRUCTURE IS RELOCATED FOR PERMANENT INSTALLATION, A LICENSED STRUCTURAL ENGINEER MUST VERIFY THAT THE STRUCTURE IS ADEQUATE FOR THE INTENDED USE.
2. CORTEN STEEL PLATE CLADDING SHALL NOT BEAR ON CURVED CHANNELS AT THE FLOOR LEVELS. SHOP DRAWINGS SHALL BE SUBMITTED TO THE OWNER AND ENGINEER FOR REVIEW. NO CLADDING FABRICATION SHALL SHALL TAKE PLACE WITHOUT APPROVED SHOP DRAWINGS.

NOTES:

1. TOP OF SIPS PANEL ELEVATION = <+2'-6 ½">
2. TOP OF WOOD DECK ELEVATION = <+2'-6 ½">
3. TOP OF STEEL ELEVATION = <+2'-2">

LEGEND

- INDICATES STEEL BEAM
- W INDICATES PLYWOOD ON WOOD FRAMING
- SIP INDICATES SIP PANELS
- INDICATES TUBE COLUMN HSS 4x4x3/8 TYP., U.O.N.
- INDICATES COLUMN ABOVE OR BELOW ONLY
- INDICATES MOMENT CONNECTION PER TYPICAL DETAIL
- INDICATES 2x4 @ 16" o.c. STUD WALL ABOVE. SEE S2.0 FOR NAILING PATTERNS.

ROBERT SILMAN ASSOCIATES
STRUCTURAL ENGINEERS
88 Madison Avenue
New York, NY 10003
P 212.620.7970 F 212.620.8157

CORNELL UNIVERSITY SOLAR DECATHLON 2009

SEAL

REVISIONS

REV. NUMBER	REVISION NAME
2	100% CD's
1	DOE SUBMISSION

TITLE

FOOTING + GROUND FLOOR FRAMING PLANS

SHEET NO.

S1.0

SCALE: 1/4"=1'-0"
DATE: 3/17/09
RSA NO.: 12905

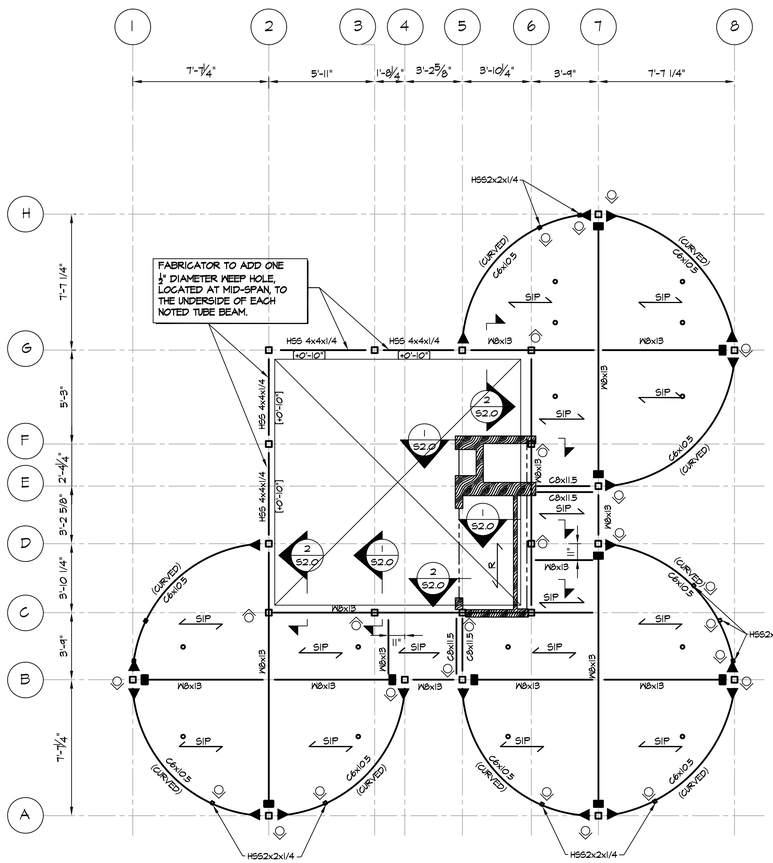

LOW ROOF FRAMING PLAN

SCALE: 1/4"=1'-0"

1 / S1.1

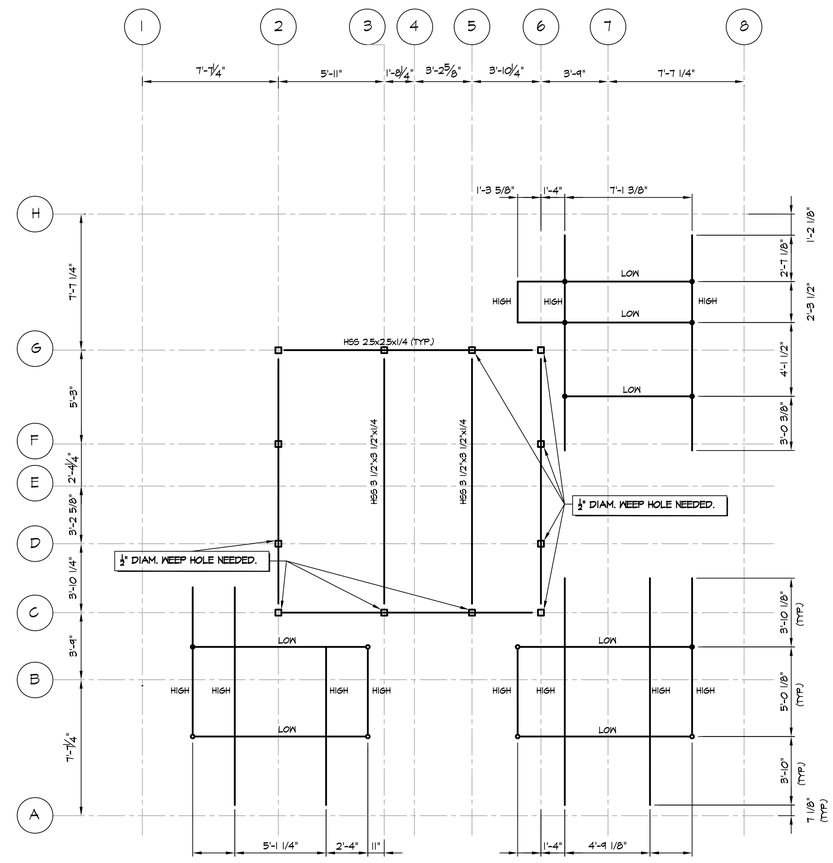

HIGH ROOF FRAMING PLAN

SCALE: 1/4"=1'-0"

2 / S1.1

FABRICATOR TO ADD ONE ½" DIAMETER WEEP HOLE, LOCATED AT MID-SPAN, TO THE UNDERSIDE OF ALL PV ARRAY TUBE BEAMS AND ONE ½" WEEP HOLE LOCATED NO MORE THAN 6" ABOVE THE BASE OF ALL 2" DIAM. PV ARRAY POSTS AND NOTED COURTYARD COLUMNS.

NOTES:

1. TOP OF SIPS PANEL ELEVATION = <+12'-3">
2. TOP OF STEEL ELEVATION = <+11-9 ½> U.O.N., THUS [+/- X'-XX"]

LEGEND

- INDICATES STEEL BEAM
- SIP — INDICATES SIP PANELS
- R — INDICATES 2x6 RAFTERS @ 16" o.c.
- INDICATES TUBE COLUMN HSS 4x4x3/8 TYP., U.O.N.
- INDICATES 2" STD. PIPE COLUMN ABOVE U.O.N.
- INDICATES COLUMN ABOVE OR BELOW ONLY
- INDICATES MOMENT CONNECTION PER TYP. DETAIL ON S2.0
- INDICATES THERMAL BREAK PER TYP. DETAIL ON S2.0
- INDICATES 2x4 @ 16" o.c. STUD WALL ABOVE. SEE S2.0 FOR NAILING PATTERNS.
- INDICATES (2) 2x10 HEADERS.

NOTES:

1. TOP OF STEEL ELEVATION = <+16'-5">
2. ALL COLUMNS AND POSTS SHOWN ARE DOWN ONLY

NOTES:

1. THIS STRUCTURE HAS BEEN DESIGNED FOR THE USE IN A TEMPORARY EXHIBITION USING THE DESIGN CRITERIA LISTED IN THE GENERAL NOTES ON S2.0. IF THIS STRUCTURE IS RELOCATED FOR PERMANENT INSTALLATION, A LICENSED STRUCTURAL ENGINEER MUST VERIFY THAT THE STRUCTURE IS SOUND UNDER THE NEW DESIGN CRITERIA.
2. THE CORTEN CLADDING MUST BE ABLE TO WITHSTAND ITS SELF WEIGHT AS IT IS NOT TO BEAR ON THE CURVED CHANNELS. SHOP DRAWINGS MUST BE SUBMITTED BY THE CORTEN MANUFACTURER PRIOR TO CONSTRUCTION.

ROBERT SILMAN ASSOCIATES
STRUCTURAL ENGINEERS
88 Wall Street, 7th Floor
New York, NY 10003
P 212.620.7970 F 212.620.8157

CORNELL UNIVERSITY SOLAR DECATHLON 2009

SEAL

REVISIONS

REV. NUMBER	REVISION NAME
2	100% CD's
1	DOE SUBMISSION

TITLE

LOW + HIGH ROOF FRAMING PLANS

SHEET NO.

S1.1

SCALE: 1/4"=1'-0"
DATE: 3/17/09
RSA NO.: 12905

GENERAL NOTES

1. ALL STRUCTURAL WORK SHALL BE COORDINATED WITH ARCHITECTURAL AND MECHANICAL DRAWINGS AND SHALL CONFORM TO THE PROJECT SPECIFICATIONS, INCLUDING THE INTERNATIONAL RESIDENTIAL CODE, 2006 EDITION.
2. CONTRACTOR SHALL PROVIDE TEMPORARY SHORING, BRACING, SHEETING AND MAKE SAFE ALL FLOORS, ROOFS, WALLS AND ADJACENT PROPERTY AS PROJECT CONDITIONS REQUIRE. SHORING AND SHEETING SHALL BE DESIGNED BY A STATE LICENSED PROFESSIONAL ENGINEER HIRED BY THE CONTRACTOR, WHO SHALL SUBMIT SHOP DRAWINGS AND CALCULATIONS FOR THE OWNER'S REVIEW.
3. DIMENSIONS AND ELEVATIONS OF EXISTING CONSTRUCTION GIVEN IN STRUCTURAL DRAWINGS ARE BASED ON INFORMATION CONTAINED IN VARIOUS ORIGINAL DESIGN AND CONSTRUCTION DOCUMENTS PROVIDED BY THE OWNER, AND LIMITED FIELD OBSERVATIONS AND MEASUREMENTS. THE CONTRACTOR SHALL VERIFY ALL INFORMATION PERTAINING TO EXISTING CONDITIONS BY ACTUAL MEASUREMENT AND OBSERVATION AT THE SITE. ALL DISCREPANCIES BETWEEN ACTUAL CONDITIONS AND THOSE SHOWN IN THE CONTRACT DOCUMENTS SHALL BE REPORTED TO THE ENGINEER OF RECORD FOR HIS EVALUATION BEFORE THE AFFECTED CONSTRUCTION IS PUT IN PLACE.

FOUNDATIONS

1. BUILDING FOUNDATIONS SHALL BEAR ON GROUND HAVING MINIMUM BEARING CAPACITY OF 1500 PSF.

STRUCTURAL STEEL

1. ALL STRUCTURAL STEEL WORK SHALL CONFORM TO THE FOLLOWING GOVERNING STANDARDS:
   A. AISC "SPECIFICATION FOR THE DESIGN, FABRICATION AND ERECTION OF STRUCTURAL STEEL FOR BUILDINGS, "LATEST EDITION.
   B. THE AMERICAN WELDING SOCIETY (AWS D1.1) "CODE FOR WELDING IN BUILDING CONSTRUCTION," LATEST EDITION.
2. ALL STRUCTURAL STEEL SHALL CONFORM TO THE FOLLOWING ASTM SPECIFICATIONS:
   A. WIDE FLANGE BEAMS, COLUMNS AND STRUCTURAL TEES: ASTM A992
   B. HOLLOW STRUCTURAL SECTIONS: ASTM A500, GRADE B
   C. STRUCTURAL PIPE SECTIONS: ASTM A501 OR ASTM A53, GRADE B.
   D. CHANNELS, ANGLES AND PLATES: ASTM A36 UNLESS OTHERWISE NOTED
   E. BOLTED CONNECTIONS OF BEAMS OR GIRDERS ARE TO BE MADE WITH ASTM A325-SC BOLTS (3/4" DIA.)
3. STEEL CONNECTIONS SHALL BE STANDARD AISC FRAMED BEAM CONNECTIONS.
   A. PROVIDE CONNECTIONS BASED ON REACTION AS DETERMINED FROM AISC UNIFORM LOAD TABLE. (UNLESS OTHERWISE NOTED ON PLANS.)
   B. REINFORCING IS TO BE PROVIDED AT CONNECTIONS WHERE CUTS REDUCE THE SHEAR OR MOMENT CAPACITY BELOW THAT REQUIRED TO SUSTAIN THE REACTION. FLANGES AND WEB ARE TO BE REINFORCED WHERE THE LOCAL CAPACITY TO SUSTAIN CONNECTION LOAD IS INADEQUATE.
   C. CONNECTIONS SHALL BE DESIGNED FOR SHEAR AND ECCENTRICITY, CONSIDERING THAT THE CONNECTION IS AN EXTENSION OF THE BEAM AND GIRDERS.
4. ALL BEAMS EXCEPT CANTILEVER BEAMS SHALL BE FABRICATED WITH NATURAL CAMBER UP. CANTILEVER BEAMS SHALL BE FABRICATED SO THAT NATURAL CAMBER RAISES CANTILEVER END.
5. WELDING SHALL BE PERFORMED BY CERTIFIED LICENSED WELDERS AND ARE AWS QUALIFIED. WELDING ELECTRODES SHALL BE AWS 5.1, CLASS E70XX (USE LOW HYDROGEN ELECTRODES FOR A572, GRADE 50 STEEL).
6. SHOP PAINT EXPOSED STEEL MEMBERS, STEEL MEMBERS NOT ENGAGED IN CONCRETE OR SPRAY FIREPROOFED, AND ALL STEEL MEMBERS AT THE EXTERIOR WALL WITH TNEMEC #10-99. FIELD PAINT AS PER ARCHITECTURAL DRAWINGS AND SPECIFICATIONS.
7. SHOP AND ERECTION DRAWINGS SHALL BE SUBMITTED TO THE STRUCTURAL ENGINEER FOR REVIEW AND APPROVAL. NO FABRICATION OF STEEL SHALL COMMENCE WITHOUT APPROVED SHOP DRAWINGS.

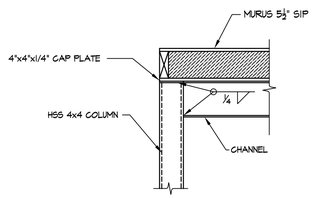

TYPICAL DETAIL
CHANNEL TO TUBE COLUMN
MOMENT CONNECTION

LOADING SCHEDULE			
DESCRIPTION / FLOOR	GROUND FLOOR	LOW ROOF	HIGH ROOF
CONTRUCTION DEAD LOAD			
SIP PANELS	10 PSF	10 PSF	-
STEEL	10 PSF	10 PSF	5 PSF
SUPERIMPOSED DEAD LOAD			
FLOORING	5 PSF	-	-
PARTITIONS	10 PSF	-	-
MISC.	2 PSF	2 PSF	-
ROOFING	-	5 PSF	-
PV PANELS	-	-	5 PSF
TOTAL DEAD LOAD	37 PSF	27 PSF	10 PSF
LIVE LOAD			
RESIDENTIAL	50 PSF	-	-
ROOF - SNOW	-	30 PSF	30 PSF
TOTAL LIVE LOAD	50 PSF	30 PSF	30 PSF
TOTAL LOAD	87 PSF	57 PSF	40 PSF

DESIGN LOAD PARAMETERS

GOVERNING CODE:
INTERNATIONAL RESIDENTIAL CODE 2006
BUILDING CATEGORY:
II

ROOF SNOW LOAD:

30	PSF	P_g	GROUND SNOW LOAD
19	PSF	P_f	FLAT ROOF SNOW LOAD
.9	PSF	C_e	SNOW EXPOSURE FACTOR
1.00		I_s	SNOW LOAD IMPORTANCE FACTOR
1.0		C_t	THERMAL FACTOR

WIND LOAD (ASCE 7-98 METHOD 2).

90	MPH	V	BASIC WIND SPEED (3-SEC. GUST)
1.00		I_w	WIND IMPORTANCE FACTOR
B			WIND EXPOSURE(S)

COMPONENTS AND CLADDING PRESSURE PER EQ. 6-18.

-		GC_{pf}	VARIES PER ASCE 7-98 FIGURES 6-5 THROUGH 6-7
12.3	PSF	q_h	C&C VELOCITY PRESSURE AT MEAN ROOF HEIGHT
±0.55		GC_{pi}	INTERNAL PRESSURE COEFF.

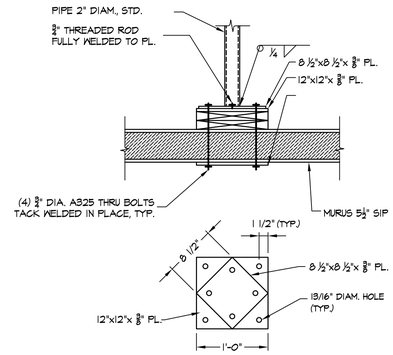

TYPICAL DETAIL
HIGH ROOF POST TO SIP
CONNECTION

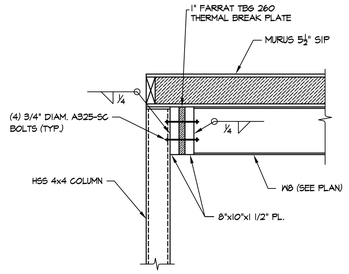

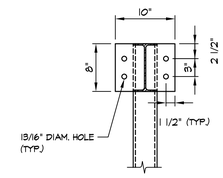

TYPICAL DETAIL
THERMAL BREAK CONNECTION
AT LOW ROOF EXTERIOR COLUMNS

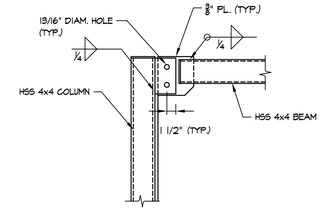

TYPICAL DETAIL
TUBE TO COLUMN @
COURTYARD LOW ROOF

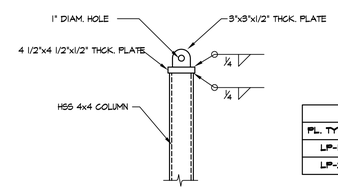

TYPICAL DETAIL
LIFTING RING 1

LIFTING PL. SCHEDULE	
PL. TYPE	COLUMNS
LP-1	A2, A7, B1, B4, B5, B8, D7, E7, G8, H7
LP-2	D2, G5

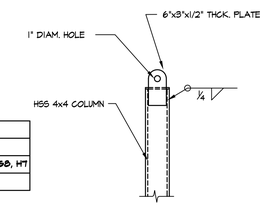

TYPICAL DETAIL
LIFTING RING 2

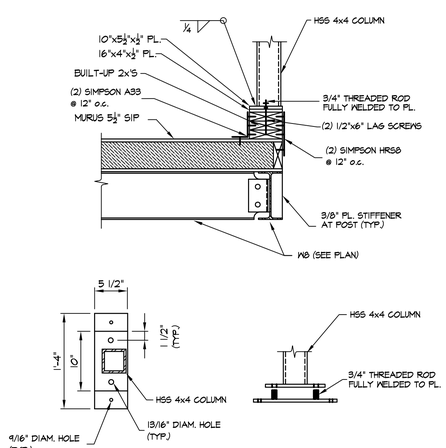

SECTION 1/S2.0
SCALE: 3/4"=1'-0"

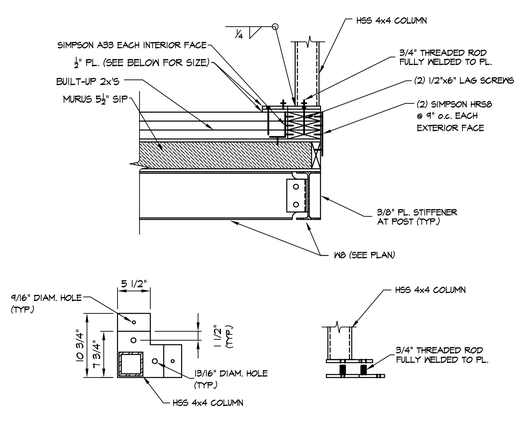

SECTION 2/S2.0
SCALE: 3/4"=1'-0"

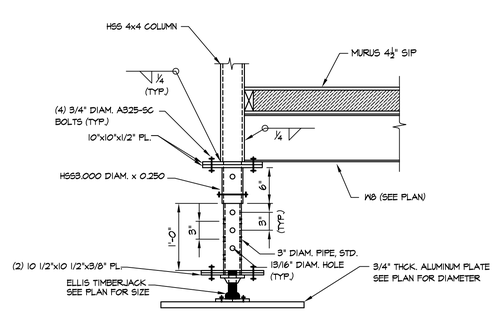

TYPICAL DETAIL
ADJUSTABLE FOOTING

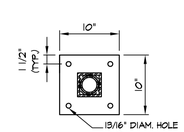

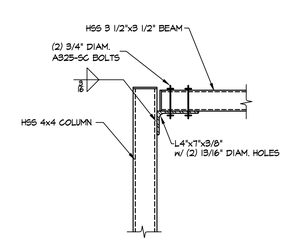

TYPICAL DETAIL
TUBE TO COLUMN @
COURTYARD HIGH ROOF

ROBERT SILMAN ASSOCIATES
STRUCTURAL ENGINEERS
136 West 21st Street
New York, NY 10003
P 212.620.7970 F 212.620.8157

CORNELL UNIVERSITY SOLAR DECATHLON 2009

SEAL

REVISIONS

REV. NUMBER	REVISION NAME
2	100% CD's
1	DOE SUBMISSION

TITLE
GENERAL NOTES + TYPICAL DETAILS

SHEET NO.
S-2.0

SCALE: N.T.S.
DATE: 3/17/09
RSA NO.: 12905

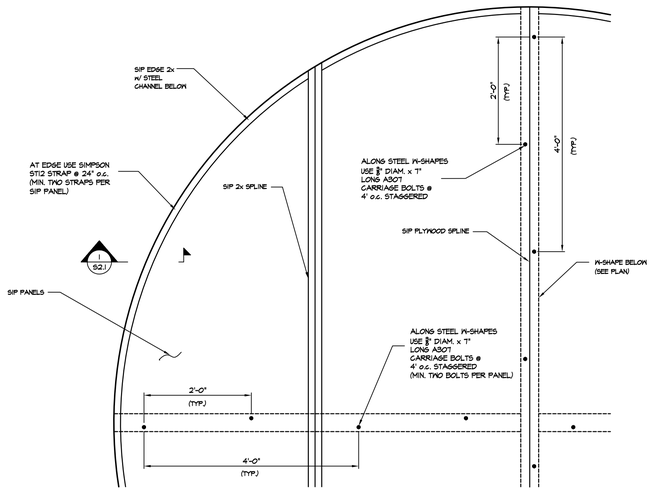

TYPICAL DETAIL
BOLT PATTERN
FOR SIPS TO STEEL

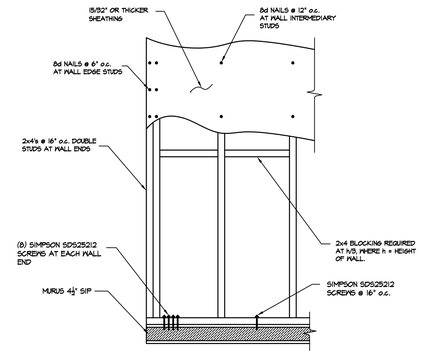

TYPICAL DETAIL
MECHANICAL CLOSET
STUD WALL

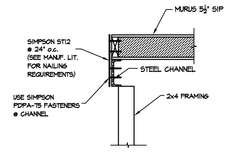

SECTION 1/S2.1
SCALE: 3/4"=1'-0"

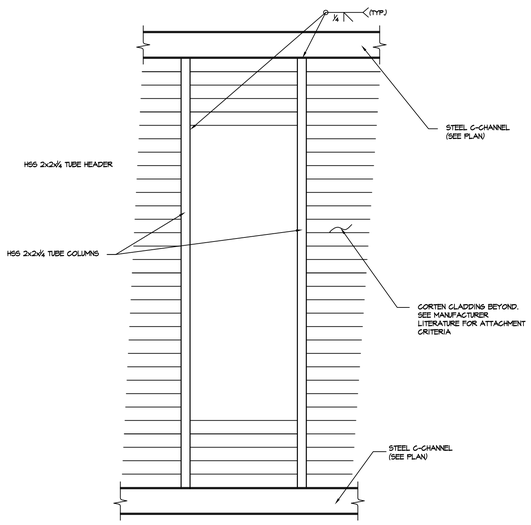

TYPICAL DETAIL
WINDOW OPENING
FRAMING

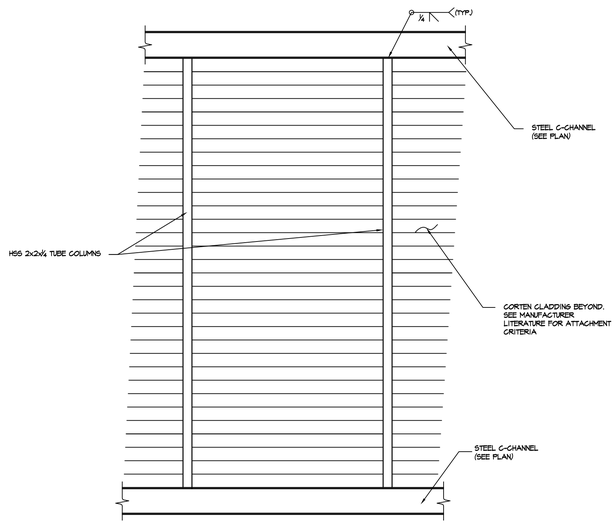

TYPICAL DETAIL
SOLAR THERMAL PANEL
FRAMING

ROBERT SILMAN ASSOCIATES
STRUCTURAL ENGINEERS
88 Madison Avenue
New York, NY 10003
P 212.620.7970 F 212.620.8157

CORNELL UNIVERSITY
SOLAR DECATHLON 2009

SEAL

REVISIONS

REV. NUMBER	REVISION NAME
2	100% CD's
1	DOE SUBMISSION

TITLE
TYPICAL DETAILS

SHEET NO.
S-2.1

SCALE: N.T.S.
DATE: 3/17/09
RSA NO.: 12905

Cornell University

Solar Decathlon 2009

Ithaca, NY & Washington, DC

Structural Calculations

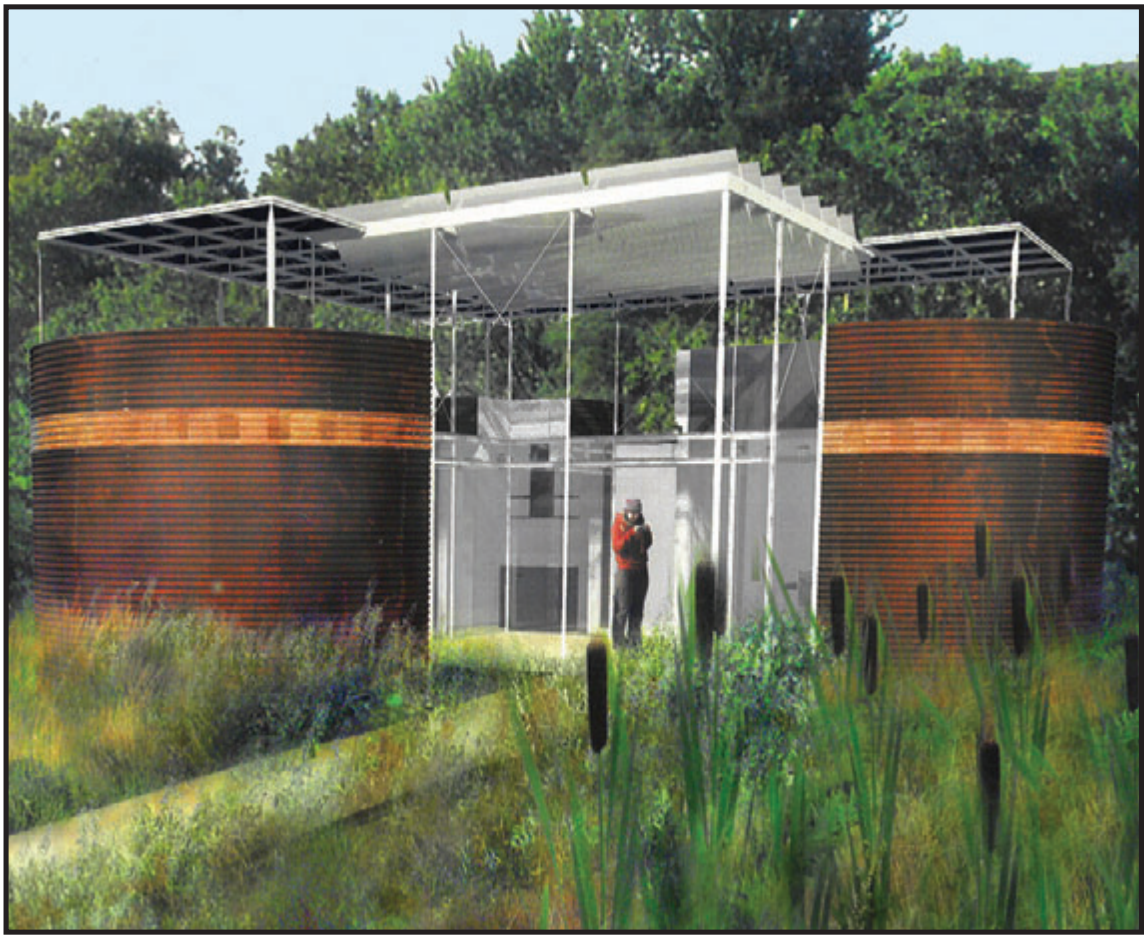

May 21,2009

ROBERT SILMAN ASSOCIATES
STRUCTURAL ENGINEERS

Cornell University

Solar Decathlon 2009

Ithaca, NY & Washington, DC

Structural Calculations

Prepared For:

Mike Wassmer
National Renewable Energy Lab
1617 Cole Blvd
Golden, CO 80401

Prepared By:

Robert Silman Associates
88 University Place
New York, NY 10003
212.620.7970

RSA Job #12905

Code & Loading Information

Cornell University Solar Decathlon Wind Pressure Calculations

Codes Used:

- International Residential Code 2006
- Solar Decathlon Building Code
- ASCE 7-02

Assumptions:

- From IRC 2006, basic wind speed
  - V = 90 MPH for both Ithaca and Washington DC
- From ASCE 7-02:
  - Assumed a rigid, partially enclosed structure
  - Assumed surface roughness B (from 6.5.6.2)
  - Assumed exposure category B (from 6.5.6.3)
  - Assumed K_{zt} = 1.0 for no major topographic features
  - K_d = .85 (from Table 6-4)
  - K_z = .70 (from Table 6-3)
- Building height, h = 20' (max.)
- Building width, B = 16' (max. for one cylinder; conservative)

Calculations:

Gust Effect Factor

G = 0.85

Velocity Pressure

$$q_z = .00256 K_z K_{zt} K_d V^2 I = (.00256)(.70)(1.0)(.85)(90)^2(1.00) = \underline{12.3\ psf}$$

Internal Pressure Coefficient

GC_{pi} = +/- 0.55 (from Fig. 6-5 in ASCE 7-02 for partially enclosed buildings)

External Pressure Coefficient

$C_{p\text{-windward}}$ = 0.8 (from Fig. 6-6 in ASCE 7-02)
$C_{p\text{-leeward}}$ = -0.5 (from Fig. 6-6 in ASE 7-02)

Adjusted Wind Pressure

$p_{windward} = q_z GC_p - q_z GC_{pi}$ = (12.3 psf)(.85)(.8) – (12.3 psf)(.55) = 1.60 psf

or

$p_{windward} = q_z GC_p - q_z GC_{pi}$ = (12.3 psf)(.85)(.8) – (12.3 psf)(-.55) = 15.13 psf ← controls

$p_{leeward} = q_z GC_p - q_z GC_{pi}$ = (12.3 psf)(.85)(-.5) – (12.3 psf)(.55) = -11.99 psf ← controls

or

$p_{leeward} = q_z G C_p - q_z G C_{pi}$ = (12.3 psf)(.85)(-.5) – (12.3 psf)(-.55) = 1.54 psf

Roof Wind Pressure

Using Figure 6-2* from ASCE 7-02 to get q_w:

$P_{roof\text{-}windward} = q_w I$ = (-10.7 psf)(1.0) = -10.7 psf ← controls

$P_{roof\text{-}leeward} = q_w I$ = (-6.8psf)(1.0) = -6.8 psf

*Assumed locations G & H for pressure values

Cornell University Solar Decathlon Load Schedule

Ground Floor:

DL:

SIP Panels	10 psf
Steel	10 psf
Floor covering	5 psf
Partitions	10 psf
Misc.	2 psf
	37 psf

LL:

Residential	50 psf (from Solar Decathlon Building Code)

Low Roof:

DL:

SIP Panels	5 psf
Steel	5 psf
Roofing	5 psf
Misc.	5 psf
	20 psf

LL:

Snow Load for Ithaca	30 psf (controlling load from IRC 2006)

High Roof:

DL:

PV Structure	5 psf

LL:

None

Global Analysis

ROBERT SILMAN ASSOCIATES
STRUCTURAL ENGINEERS

Project:	CUSD Solar Decathlon	Job number:	12905
Subject:	Global Stability	Date:	12.12.2008
By:	MEB		

GLOBAL SAFETY FACTORS

Sliding	1.5
Overturning	2.0

DEAD LOADS	Unit load	Units	Quantity	Total load [lbs]	
FLOOR					
SIP panels	10	lb/ft^2	710	7,100	
Structural Steel	10	lb/ft^2	710	7,100	
Finish	5	lb/ft^2	710	3,550	
Partitions	10	lb/ft^2	710	7,100	
Misc	2	lb/ft^2	710	1,420	
LOW ROOF					
SIP panels	10	lb/ft^2	550	5,500	
Structural steel	10	lb/ft^2	550	5,500	
Roofing	5	lb/ft^2	550	2,750	
Misc.	5	lb/ft^2	550	2,750	
HIGH ROOF					
Structural steel	5	lb/ft^2	700	3,500	
PV Array	5	lb/ft^2	700	3,500	
WALLS					
Corrugated Panels	45	lb/ft	110	4,950	
Stud walls	30	lb/ft	110	3,300	
Windows	15	lb/ft	28	420	
TOTAL DEAD LOAD, ***P***				**58,440**	lb

WIND LOADS

HORIZONTAL

Windward pressure =	15.13	psf		
Leeward pressure =	-11.99	psf (suction)		
Total Pressure =	27.12	psf		
Projected area =	[34' x 13'] + [34' x 1.0'] =		476	ft^2
Total wind force, ***W*** =	[476 ft^2] x [27.12 psf] =		**12,909**	lb

UPLIFT

Uplift pressure =	-10.7	psf (suction)		
Projected area =	700	ft^2		
Total uplift force, W_{uplift} =	[10.7] x [700] =		**7,490**	lb

SLIDING

Total resting force, $F = (P - W_{uplift}) \times \mu$

Where:

Total dead load P =	58,440	lb
Total uplift force, W_{uplift} =	7,490	lb
Coefficient of friction, steel to concrete, μ =	0.45	
F =	22,928	lb
Total wind force, W =	12,909	lb

Factor of safety (sliding), $FS_s = (F / W)$

= **1.78** > 1.5 **OK**

OVERTURNING

Total resisting moment @ A, $M_r = (P \times d_1) - (W_{uplift} \times d_2)$

Where:

Total dead load P =	58,440	lb
Total uplift force, W_{uplift} =	7,490	lb
d_1 =	13	ft
d_2 =	17	ft
M_r =	632,390	lb-ft

Total overturning moment @ A, $M_o = (W \times d_3)$

Where:

Total wind force, W =	12,909	lb
d_3 =	7	ft
M_o =	90,364	lb-ft

Factor of safety (overturning), $FS_o = (M_r / M_o)$

= **7.00** > 2.0 **OK**

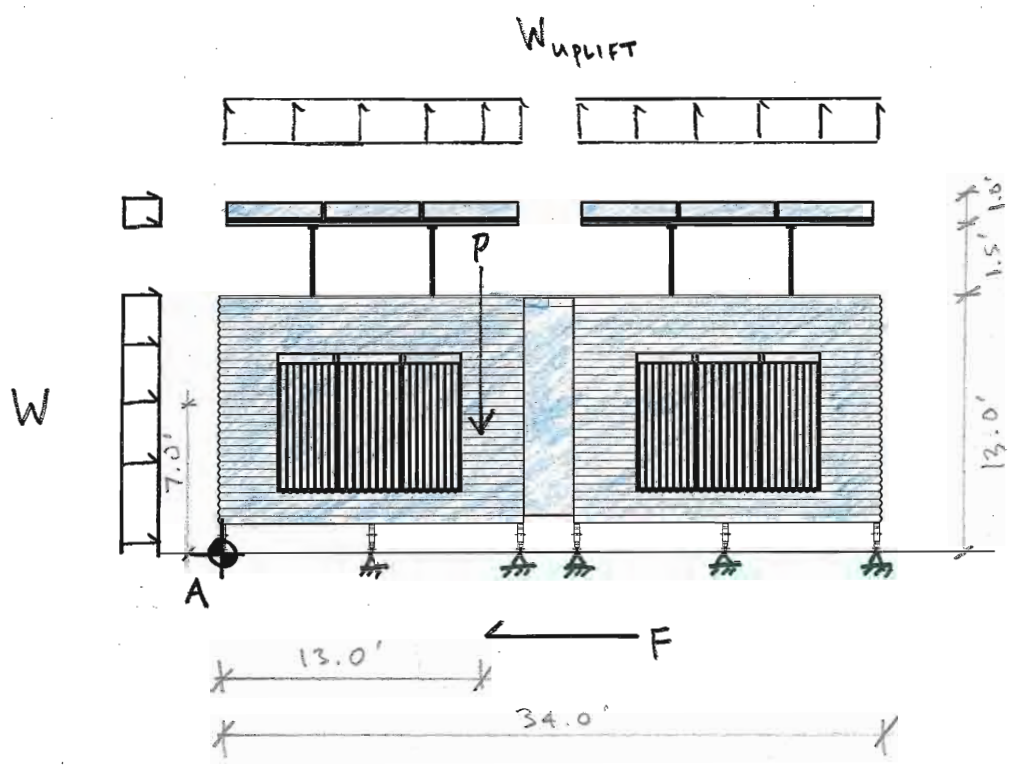

Local Analysis

Local Analysis:

The following calculations present the design of the beam and column determined to be the "worst case" [assuming the most loading] in the structure:

Beam:

The radial beams at the cylindrical sections of the house were found to be the governing case for the beam design.

Diameter of cylinder=Length of member, L=15.67'

DL=25psf
LL=50psf

Flexural Line Load acting on the member, w (#/ft) = 322.5 #/ft

Point Load acting at midspan from framing members, P (#) = 2 [193#/ft x 7.835'/2] = 1512.2 #

Maximum Shear = wL/2 + P/2 = (323#/ft x 15.67')/2 + 1512#/2 = **3286.7#**
Maximum Moment = $wL^2/8+PL/4$= (323#/ft x $(15.67'^2)/8$ + (1512# x 15.67')/4= **15837.3#-ft**

Assume ASTM Grade 992 Steel (Fy=50ksi)

$S_{req'd}$= (M_{max}/1000#/kip x 12")/($0.6F_y$) = 190k-in/30ksi = 6.33in^3

Δ_{LL} = 5/384[wL^4/EI]+1/48[PL^3/EI] = 5/384[215#/ft x $(15.67ft)^4$ x 1728/ 29x10^6psi x 39.6in^4] + 1/48[1013# x $(15.67ft)^3$ x 144/29x10^6psi x 39.6in^4] = **0.264in** = L/712<L/360 -- OK

Δ_{TOTAL} = 5/384[wL^4/EI]+1/48[PL^3/EI] = 5/384[323#/ft x $(15.67ft)^4$ x 1728/ 29x10^6psi x 39.6in^4] + 1/48[1512# x $(15.67ft)^3$ x 144/29x10^6psi x 39.6in^4] = **0.397in** = L/474<L/240 – OK

Column:

The 4"x4"x3/8" tube columns at the perimeter of the cylinders were the governing members for column design. These columns are subjected to an axial load due to the roof members framing into it as well as a flexural load due to wind loading.

Pinned-Pinned Column, k = 1.0
Unbraced Length, L_b = 11'-0"
r = 1.47in
S = 5.13 in^3

kL_b/r = **89.8** < $800/F_y^{½}$ = 117.9 – Slenderness check → OK

Axial loading, P_a = 3286.7#
fa = Pa/Ag = 3286.7#/4.78 = **687.6 psi**

Cc = (2π2E/Fy)1/2=111.6

Since kLb/r<Cc… It is a short column

F_a=[1-$(kL_b/r)^2/(2C_c^2)$]F_y/[5/3+3KL_b/r/8C_c+$(kL_b/r)^3/(8C_c^3)$] = **16,344.4psi**

Tributary width due to wind loading equal = ¼(circumference) = ¼(πd) = 12.3'

Design wind pressure = 15.13psf

Flexural line load acting on the column, w_b = 16.1psfx12.3' = 198.0#/ft
$M_b = w_b L_b^2/8$ = 198.0 #/ft x 11'^{2}/8 = 2,994.8 #-ft
fb = Mb/S = 2,994.8#-ft x 12/5.97in3 = **6,019.7psi << 0.6(46,000psi)=27,600psi → OK**

Unity Check = fa/Fa+fb/Fb < 1.0
687.6/16,344.4 + 6,019.7/27,600 <1.0
0.26 << 1.0 → OK

DETAILED WATER BUDGET

Gray Water	**Total Water Usage (Gals)**	**Notes**
Washer	137	13.7 gals per load. 10 tests
Bathroom sink	20	
Shower	60	15 gallons at day. 4 tests
Boiling water comp	18.9	5 lbs per test. 4 tests
Black Water		
Dishwasher	28.5	5.7 gals per test. 5 tests.
Kitchen Sink cooking	50	25 gallons a meal. 2 meals.
Irrigation		
1st Fill	800	This tank will be filled once the first time the water truck arrives and then topped off right before the judging begins.
2nd Fill	200	
Total water required for the house:		
Potable Water	314.4	A 500 gallon loaf tank will be used to hold our potable water that will be completely filled up.
Irrigation water	1000	
Total Water Needed for competition and contests.	1314.4	
Total amount of water needed to fill tanks.	**1489.4**	

Summary of Unlisted Electrical Components

Currently, no unlisted electrical components will be used in the Cornell University house. This is subject to change in later deliverable submissions.

GE Energy
GE Energy (USA) LLC
231 Lake Drive
Newark, DE 19702
T 302 451 7500
F 302 451 7501

Proforma Invoice

Invoice No. 20081217 **Date** **17-Dec-08**

Bill To:

Cornell University
Solar Decathlon Team

Ship To:

Cornell University
Solar Decathlon Team

Estimated Ship Date: TBD - 2009
Payment Terms: Donation

Ship Via: Motor Freight
Freight Terms: FOB - Newark, DE

Item No.	Quantity	Description	USD Unit Price	USD Amount
1	40	GEPVp-200-MSA 200 Watt Modules	$762.00	$30,480.00
			Total:	**$30,480.00 USD**

GE Energy - Solar is pleased to support the Cornell University Solar Decathlon Team in 2009

Customer Signature: _____

Date: _____

* NOTE- For quotation only. All orders are subject to GE's Terms & Conditions

RECONFIGURABLE FEATURES AND PROCEDURES

I-101 NANA WALL – FOLDS OPEN

I-104 KITCHEN ISLAND – FOLDS OPEN

1-102 BED – LIFTS UP

CORNELL 116

team name and lot number

PV SYSTEMS

Module Manufacturer	Short Description of Array	DC Rating of Array (sum of the DC ratings)
GE	4 STRINGS OF 10 PANELS EACH	329V 16.2A

Total DC power of all arrays is 8.0 kW (in tenths).

xxxxxxxxxxxxxxxxxxxxxxxxxxxxxxx

INVERTERS

Inverter Manufacturer	Model Number	Voltage	Rating (kVA or kW)	Quantity
PVPOWERED	PVP4800	240	4.8	2

Total AC power of all inverters is 10 kVA or kW (in whole numbers).

xxxxxxxxxxxxxxxxxxxxxxxxxxxxxxx

Reference Drawing Set for the following information:

1. E-601 : One-line electrical schematic

2. E-603: Calculations of service/feeder net computed load and neutral load

3. X-101, E-101: Plan view of the lot showing the house, decks, ramps, tour paths, and the service point

4. A-204: Elevation view showing the terminal boc (with service point)
   A-204: Elevation view showing the meter
   E-201: Elevation showing other service equipment

ENERGY ANALYSIS RESULTS AND DISCUSSION

Abstract

The goal of the energy analysis was to determine what the energy loads of the system will be, and to use that information to size the electrical, heating and cooling systems effectively. Thus, analyses were done for peak heating and cooling loads, HVAC components, electrical usage, and the alternative solar thermal system. Energy production needed to meet these requirements, and thus the total wattage of the PV array was sized accordingly. House electrical performance was predicted through physical tests of appliances, and the house HVAC system was simulated with CFD to predict how well the house would maintain a 'comfort zone.' Additionally, the location of the system was varied for the site of the competition, Washington D.C., and for the likely final location of the house, Ithaca, NY.

HVAC Loads

The heating and cooling loads were determined using the American Society for Heating, Refrigerating, and Air-Conditioning Engineers (ASHRAE) method as it is explained in the ASHRAE Handbook, chapter 29.[1] This method incorporates the characteristics of the house as well as the temperature of the region to determine what the maximum heating and cooling loads will be. Using these equations, separate loads and losses were calculated in an easily accessible spreadsheet. Inputs (including weather data, thermal characteristics, and ventilation specifications) were used to find the ventilation losses, envelope loads, internal gains, and distributive losses. Using the finished spreadsheet, loads were calculated for both Washington D.C. and for Ithaca, NY. The absolute maximum temperatures and the average temperatures of each location were both simulated. All of these calculations assumed a steady state, normalized situation. Calculations for an average day in September for Washington D.C. were also included to determine what the typical loads will be during the competition.

The results we obtained are consistent with the weather data for the three cities. On average, D.C. would require a larger cooling load than Ithaca since D.C. has higher temperatures. Phoenix would require the greatest cooling load, with higher average temperatures yearly than D.C. or Ithaca. The weather data used can be seen in Figure 1, and the results can be seen in Figure 2.

The energy loads calculated from this spreadsheet were used in sizing crucial heating and cooling equipment for the Heating, Ventilation, and Air Conditioning Team (HVAC). The energy analysis was especially useful in sizing components of the Reverse Cycle Chiller.

□F	D.C. MAX	ITHACA MAX	D.C. AVRG	ITHACA AVRG	D.C. SEPT.
High	106	103	88	82	79
Low	-15	-25	27	16	62

Figure 1: Weather Data for ASHRAE model

After the system was sized, and the drawings were adjusted, a new model was created in Ecotect to predict the heating and cooling loads. This model included the finalized drawings and thermal characteristics of the construction. The results can be seen in Figure 3.

[1] ASHRAE Fundamentals 2005, chapter 29

The max heating loads in the Ecotect model and the ASHRAE calculations were very close (about 3500W in the Ecotect model translates to 11940 BTU/hr while ASHRAE predicted 11335 BTU/hr, a difference of only 5%). The Ecotect model was also useful in predicting how the cooling load will fluctuate throughout the year, and how the house will thermally interact with insolation.

The chiller was sized to meet the heating loads, and thus has the ability to keep the house at a comfortable temperature at any point during the year in D.C.. Data from both the Ecotect model and the ASHRAE model can be found below.

	(Loads in BTU/hr)	**Heating Load**	**Cooling Load**
D.C. MAX	Envelope	11145	2211
	Infiltration	4851	1057
	Internal Gain	-	1051
	Subtotal	15997	4320
	Distribution Loss	56779	484
	Total Sensible Load	**21675**	**4805**
ITHACA MAX	Envelope	12426	2030
	Infiltration	5409	951
	Internal Gain	-	1051
	Subtotal	17836	4033
	Distribution Loss	6332	452
	Total Sensible Load	**24167**	**4484**
D.C. AVERAGE	Envelope	5782	916
	Infiltration	2584	443
	Internal Gain	-	1051
	Subtotal	8366	2410
	Distribution Loss	2970	277
	Total Sensible Load	**11335**	**2687**
ITHACA AVRG	Envelope	7195	532
	Infiltration	3216	221
	Internal Gain	-	1051
	Subtotal	10410	1805
	Distribution Loss	3696	208
	Total Sensible Load	**14106**	**2012**
D.C. SEPT.	Envelope	1281	691
	Infiltration	558	106
	Internal Gain	-	1051
	Subtotal	1839	1848
	Distribution Loss	653	201
	Total Sensible Load	**2491**	**2049**

Figure 2: Heating and cooling loads from ASHRAE calculations

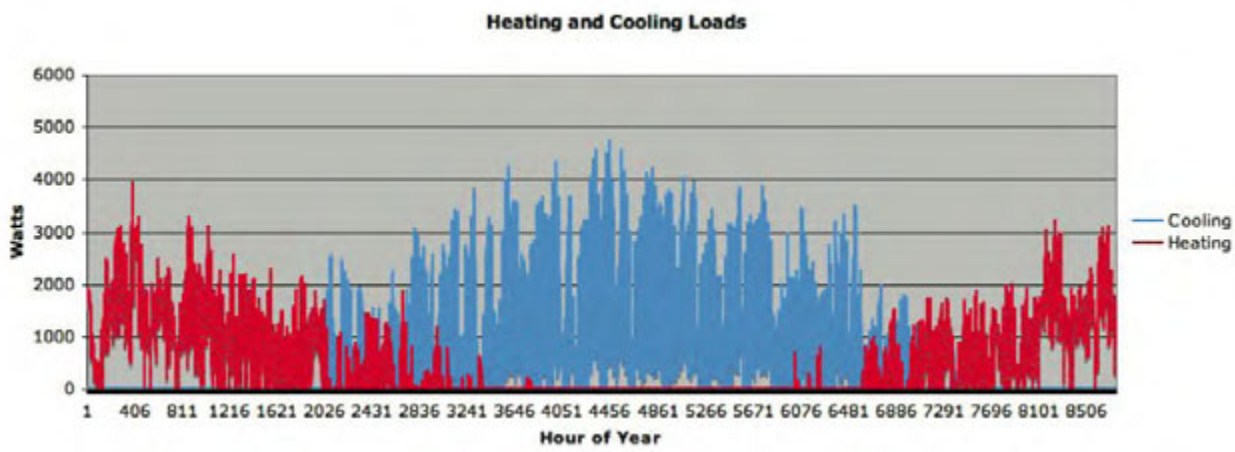

Figure 3: Heating and Cooling Load over the course of the year from Ecotect (D.C.).

HVAC Sizing calculations

A significant portion of the house's electrical loads consisted of energy consumed by the reverse-cycle chiller (RCC). The electricity consumed by the RCC depended on the length and frequency of the RCC's on-cycles, which in turn depended on the size of the chilled tank and its rate of energy transfer with the surrounding air. When cooling, the RCC turns on whenever a user-defined maximum temperature is reached in the tank, and continues operating at maximum capacity until the fluid has cooled to the fixed minimum temperature of 38□F. Heat from the surrounding air is transferred to the fluid through the tank's walls (this was considered negligible for the initial calculations) and via the hydronic coil in the air handler. Heating the house follows a similar pattern.

A heat transfer model allowed for the lengths and frequencies of the RCC's on-cycles to be calculated during cooling. This model gives cycle times—and subsequent electrical consumption—as a function of system specifications.

The variable specifications included the size of the chiller tank, the tank temperature range, outside temperature, and the cooling load (the cooling load was determined from the outside temperature using the ASHRAE method above). The capacity of the chiller was known (the Unico Unichiller had a capacity of 36,000 Btu/hr), as was the refrigerant (40% glycol, 60% water).

The heat capacity of the tank was then determined by using $m(c_p)\Delta T$, where m is the mass of the refrigerant mixture in the tank, c_p is the specific heat of the mixture, and ΔT is the temperature range of the tank (this range was directly varied for optimization). The carrying capacity of the tank was also varied, which meant that the mass of the refrigerant mixture in the tank was also varied.

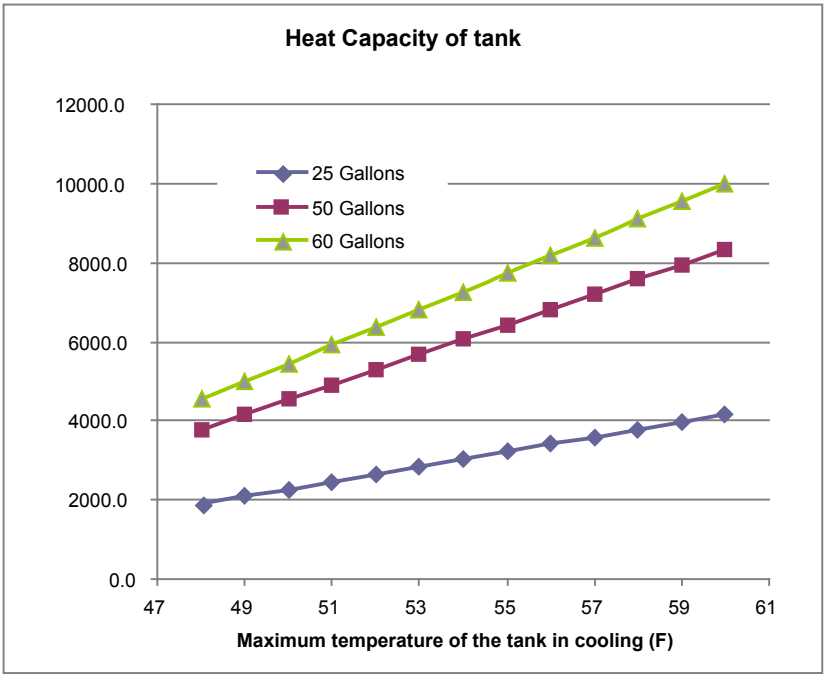

Figure 4: Heat capacity of chiller tank vs. temperature range and size

As the max tank temperature goes up, the rate of heat transfer goes down. From heat transfer equations, a maximum tank temperature of 55□F still allowed for adequate cooling performance, while maximizing cycle time. As the cycle time gets larger, the system becomes more efficient because efficiency losses during the cycle start-up are minimized. Unfortunately, the size of the tank was restrained because the space in the mechanical closet was limited, and because an oversized tank would lose a larger percentage of heat to the mechanical closet. Thus, a 50-gallon tank was chosen, capable of holding 6345.9Btu. This translates to an on-cycle time of about 10.6 minutes (6,345.9Btu divided by 36,000Btu/hr). The total cycle time was then calculated by dividing the tank capacity by the cooling load. This came out to a cycle time of about 3.3 hours during the competition in D.C..

The calculation for the on-cycle time is based on an ideal situation, i.e. there is no heat transfer between the air handler and the tank. A more comprehensive analysis would need to be done to determine how the system losses would affect the cycle time.

Ventilation Strategy

In order to model the effectiveness of the ventilation strategy, the Integrated Environmental Solutions Virtual Environment (IES<VE>) computational fluid dynamic simulator, MicroFlo, was used. The 2009 CUSD house, was drawn using Google Sketch-Up and then imported into IES. The house dimensions were carefully plotted and a final result is shown below.

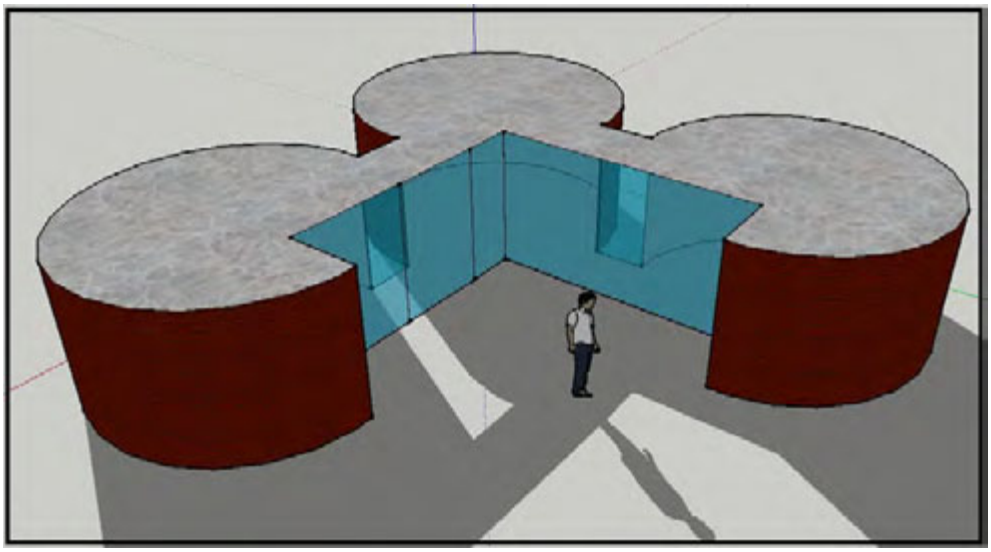

Figure 5: Model Geometry

Vents were then drawn into the house geometry, and the MicroFlo simulator was run. The results are presented below.

As can be seen in Figure 6, the temperature distribution should be well within the range of 72-76 when cooling. Hallways and corners tend to pose the biggest problems. The circular rooms aid in the temperature distribution.

In the 3D mesh temperature distribution, a different temperature scale is used. Dark blue areas were the temperature of air coming out of the vents (approximately 66□F) and green areas were approximately 70□F in cooling. While these temperatures would suggest that the house would be cooler than desired, it actually means that the ventilation system has the capacity to cool the house to these temperatures if the occupants so desire.

Additionally, analysis on the air quality was measured. As Figure 7 shows, air will be stagnant for no more than three minutes and only in corners or near walls. Again, the rounded surfaces encourage air flow, and allow for high quality air to circulate.

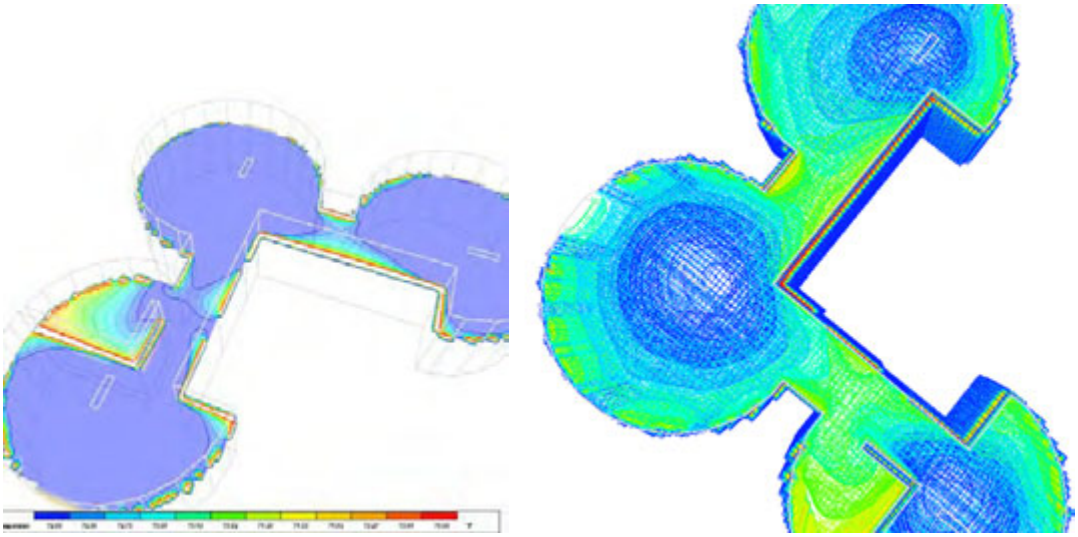

Figure 6: Temperature distribution

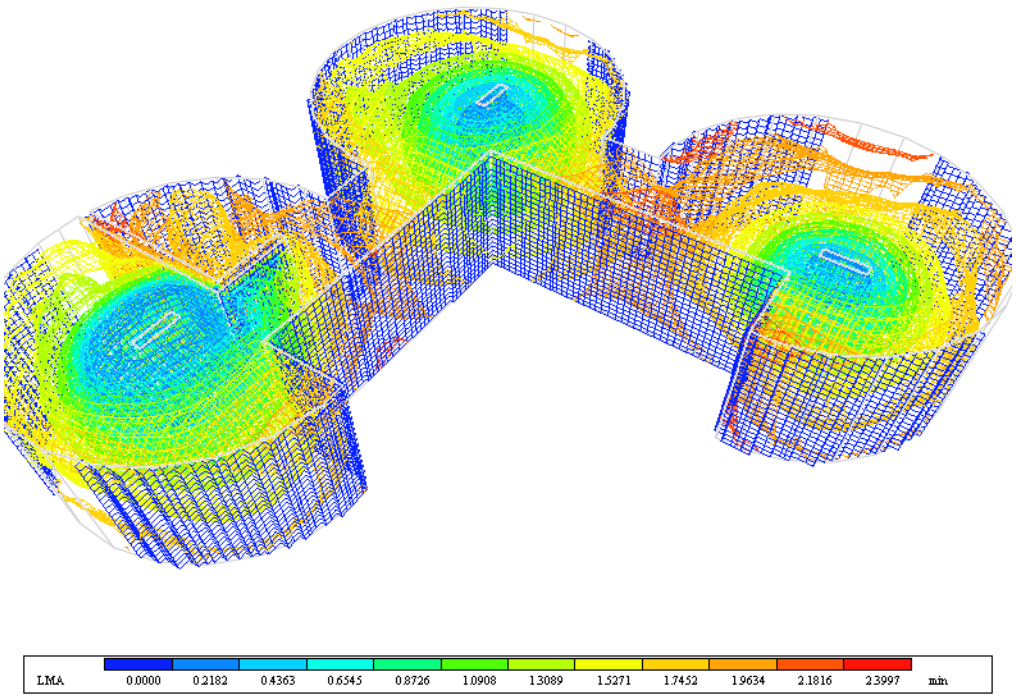

Figure 7: Log Mean Air time is less than 3 minutes throughout the house (i.e. air is no more than 3 minutes old throughout the space)

Electrical Energy Usage

There were a few main components of electrical energy usage. The usage from the HVAC system was the most complicated to predict, and this was done using eQuest. Then electrical usage from lighting and appliances was calculated by determining the power usage and the frequency of use for each component.

eQuest Quick Energy Simulation Tool was used to model the 2009 house to compare it with a standard baseline house (a rectangular portable home). The geometries of these two models can be seen in Figure 5.

The baseline model was given the standard default values provided by eQuest, and given standard sized windows. The important differences between these models were the thermal properties of the construction, the footprint of the house, and the efficiencies of the HVAC equipment used. While the 2009 house is more efficient than a standard house, and has very good insulation (R-values are over 40 for the cylindrical walls), it also has a significant amount of glass fenestration. It should be noted that while the drawings for the house have a horizontal band of windows, in eQuest this was entered as a percentage of the façade for each off the cardinal directions. Thus, the program placed the windows arbitrarily on each façade, causing the image to look different (actual solar gains would remain unchanged though).

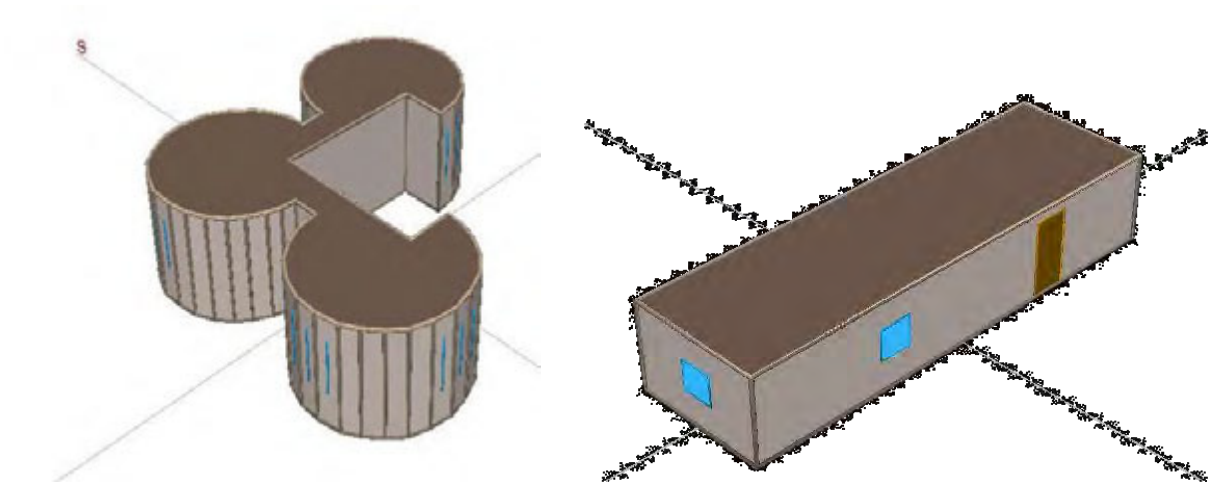

Figure 8: Geometries of the 2009 house (left) and a typical portable home (right)

The results of the simulations can be seen in the chart below:

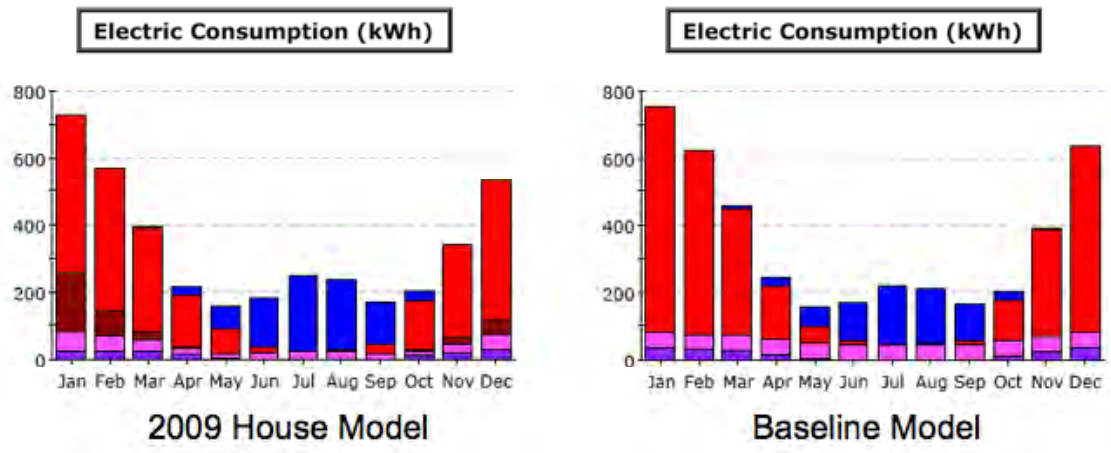

Electric Consumption (kWh)

	September	Total
Baseline	163.8	4,226.40
2009 Model	168.2	3,970.80

Figure 9: eQuest results

As can be seen in the tables and graphs, for the yearly total electric consumption, our 2009 house is expected to outperform a standard house in Washington, D.C.. The 2009 house is expected to use about 6% less energy per year. However, for the month of September, the standard house has a slightly better performance (about 3%). We believe this difference is due to minimal heating and cooling during this month in Washington, D.C., coupled with the fact that our 2009 house has a larger outside surface area. It is also important to note that the unconditioned courtyard of the 2009 house will provide a buffer zone and lower the load on the house, but this effect cannot be quantified using eQUEST because the program does not take into account unconditioned space. Thus, the difference in energy usage for the conditioning of a space between the 2009 house and a typical house of equal square footage will be minimal.

The electric loads for the appliances and lighting fixtures was tested to ensure that results were accurate. Using an electrical data logger, power consumption of appliances could be determined while in use, or while idle. In some circumstances, power fluctuated as the appliance went through a complete cycle, and thus the total power consumed per use was determined. Nonetheless, these results proved to be helpful in determining how much electricity would be consumed during the competition, and how the power consumption curve would look. The microwave oven results can be seen below in Figure 10 as an example.

Interestingly, the idle electric usage of many of the appliances (including the microwave) was fairly high (idle power consumption was 35 watts for both the TV and microwave). From examining these consumption curves, unnecessary electrical usage will be minimized in the house.

Spreadsheet calculations of loads were performed (see Appendix A) to determine what the typical power consumption would be. The breakdown by category can be seen in Figure 11. Given the electrical consumption schedule, the net electrical usage was graphed in Figure 12 (note that a positive result means total production is greater than total usage).

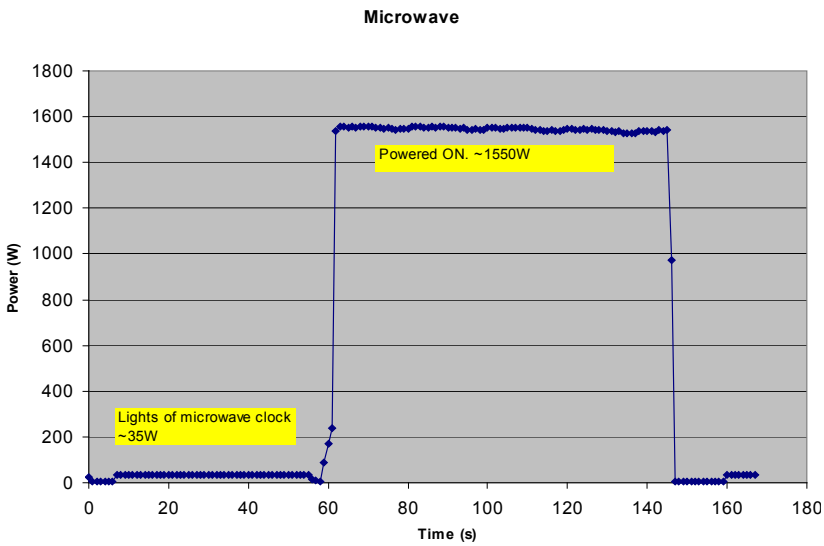

Figure 10: Example of data logger testing for the microwave

Contest	Appliances Used	Power (kW)
Comfort Zone	Temperature (HVAC)	0.565
	Humidity (HVAC)	0.05
Hot Water	Hot Water	0
Appliances	Dishwasher	0.0345
	Clothes Washer	0.0174
	Clothes Dryer	1.5
	Refrigerator (Combo)	0.0217
	Freezer (Combo)	0.0217
Home Entertainment	Cooking	0.9
	Dining	0.01
	Public Exhibit/Theater	0.05
	Workstation Lighting	0.02
	House Lighting	0.149
	Total Power	3.34

Figure 11: Spreadsheet results by contest

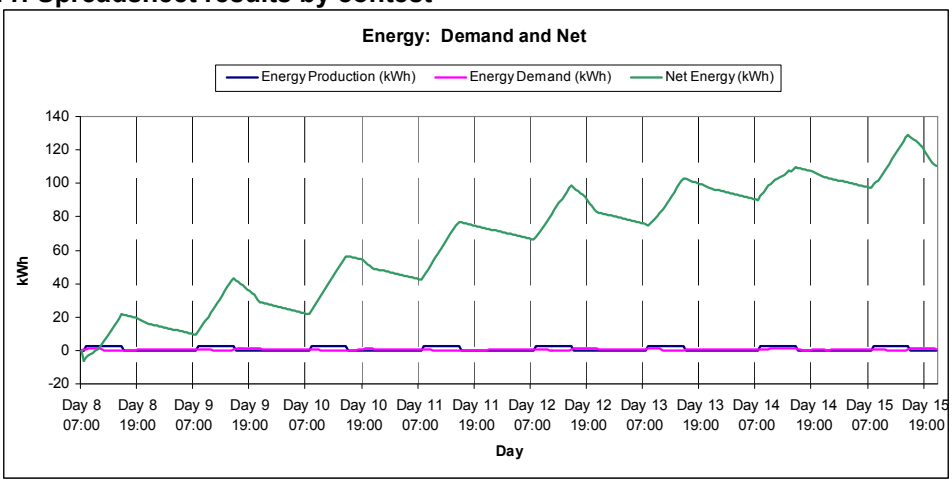

Figure 12: Net electrical production

Solar Thermal

Additional modeling was done to see where the thermal gains were highest on the house, and how the metal exterior could be used to conduct this heat into hot water storage. Using Ecotect, incident solar radiation was modeled (see Figure 13).

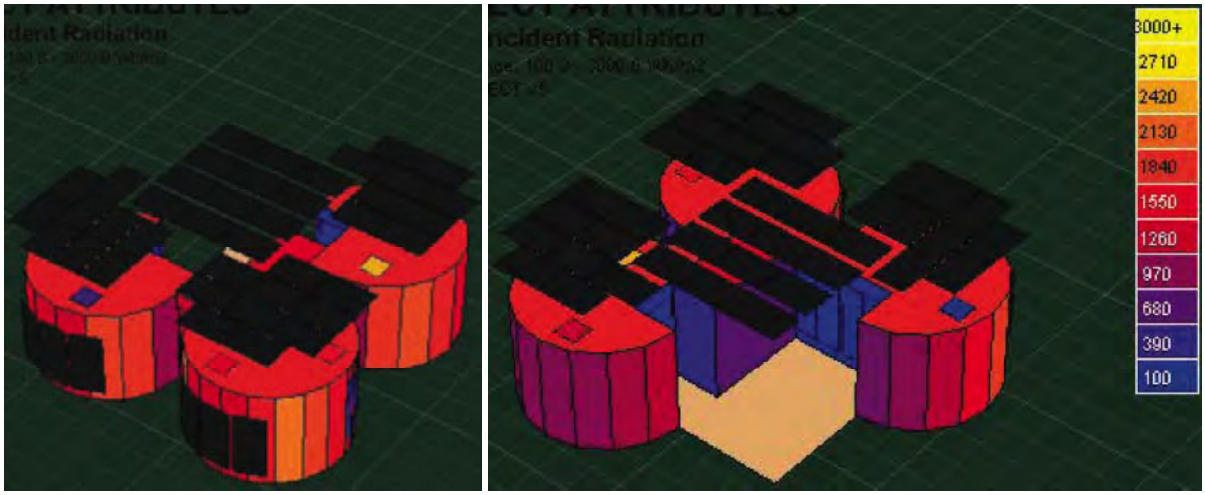

Figure 13: Incident solar radiation

It is interesting to note the effect of the photovoltaic panels on the skylights in this model. The blue skylights are heavily shaded, letting in 100-200 Wh/m^2, while the other skylights colored red or yellow are letting in between 1000-3000Wh/m^2. This model provided the basic information needed to place the solar thermal panels appropriately and effectively.

Alternative Solar Thermal System

The alternative system consists of copper pipes that will sit closely against the hot corrugated steel as it is heats up during the day. These pipes will carry the domestic water, and pre-heat it before it goes into the actual solar thermal tubes.

This innovative system needed to be modeled to ensure that the pre-heat would have a significant amount of power. Mathematica was used to simulate the heat transfer from the surroundings to the corrugated steel, and from the steel to the water. Because there were a variety of design decisions that needed to be made, the model output was based on four flow rates, 1, 2, 3 and 6 GPM.

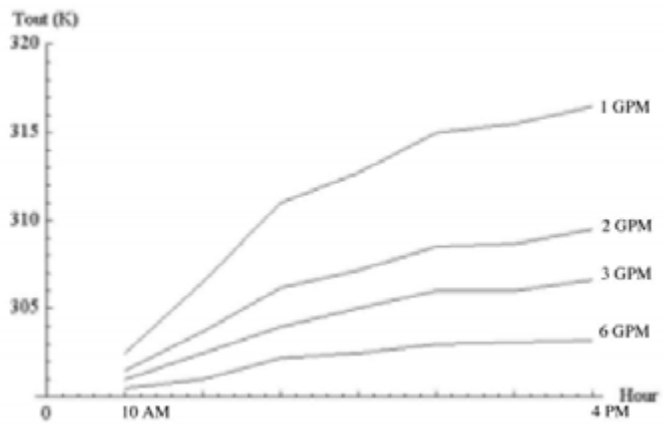

Figure 14: Outlet Temperature from Alternative Solar Thermal System from 10am to 4pm

After all factors were considered, a peak daytime temperature increase of approximately 6-9□F was calculated for water flowing through the pipes. The alternative system should deliver up to 4000W of power if it is used during peak insolation and if the thermal contact resistance between the wall and the pipe is successfully minimized.

Lighting

In order to make sure the house would be sufficiently lit, a daylighting model was built in Radiance. The model was conservative, and assumed that the daylighting was provided from an overcast sky.

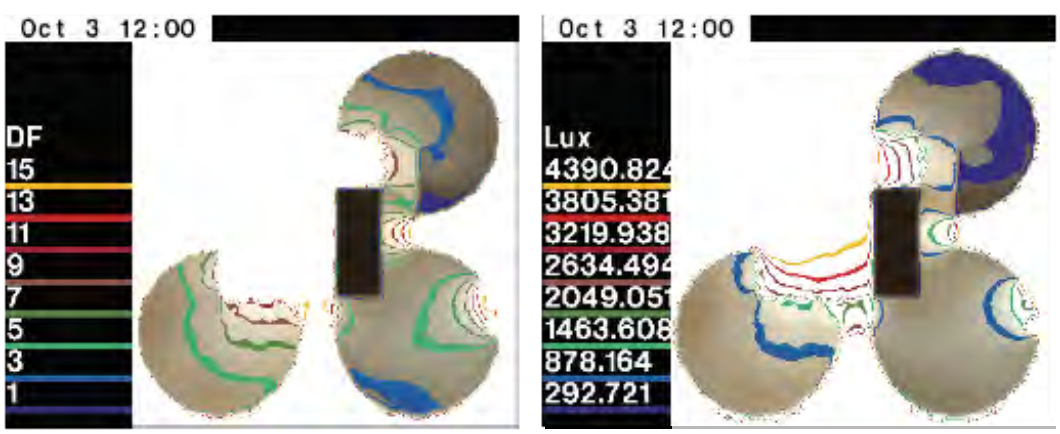

Figure 15: Daylighting Factor (left) and Lighting analysis (right) for the house as designed.

As can be seen from the model, the daylighting significantly contributes to the lighting of the kitchen (bottom right zone), the bathroom (the bottom of the top right zone), and the bedroom (bottom left). From this model, it is clear that more light will need to be added to the living room to account for the lack of daylighting in this zone. Because the design's daylighting was modeled, lights will be placed effectively, and there will be less electrical consumption for lighting the house during the day.

Appendix A: Electrical usage calculations

Appliance	Make	Model	kW
Refrigerator / Freezer	Summit	FFBF245SS	0.043
Dishwasher	Whirlpool	GU3600XTVY	0.034
Washer	Whirlpool	WFC7500VW	0.017
Dryer	Whirlpool	WED7500VW	1.5
Oven	Whirlpool	GBS279PVS	8
Cooktop/Stove	Diva	DDP-2	0.9
Interior Lights			0.15
Exterior Lights			0.43
Television (Picture only)			0.03
Speakers			0.02
Microwave			1.55
Microwave Clock			0.035
HVAC Cooling	Unico	UniChiller RC	0.565

System	Power (kW)	Energy Consumed Per cycle (kWh)
Refrigerator (Combo)	0.0217	0.0108
Freezer (Combo)	0.0217	0.0108
Temperature (HVAC)	0.5650	0.2825
Humidity (HVAC)	0.0500	0.0250
Dishwasher	0.0344	0.1033
Workstation Lighting	0.0200	0.0100
Clothes Washer	0.0173	0.0522
Clothes Dryer	1.5000	4.5000
Cooking	0.9000	1.8000
Hot Water	0.0000	0.0000
House Lighting	0.5810	0.2505
Dining	0.0100	0.0200
Home Theatre	0.0500	0.0250

ARCHITECTURE DESIGN NARRATIVE

The 2009 Cornell University Solar Decathlon House marries sustainable modular design with a unique assembly of circular and orthogonal elements, the former an emulation of the vernacular architecture found in upstate New York. The house is composed of a central square courtyard, surrounded by three conditioned “living” cylinders, beneath a floating rectilinear array of photovoltaics, which cover the entire structure.

The open courtyard serves as the focal point of the house, defined by perimeter columns and a photovoltaic canopy as an independent cube. The adjoining cylinders – bedroom, kitchen, and living room – direct views centrally, to the courtyard. Though there are few windows along the circumference of each cylinder, large operable NanaWalls™, proprietary wood-framed glass walls, completely open the space between the cylinders and the courtyard. This exchange is encouraged with dynamic furniture that can be moved between interior and exterior and an outdoor fireplace built into the courtyard.

The solar house combines bold aesthetic features with creative sustainable applications. The cylinders are inspired by industrial agricultural materials, employing a CORTEN® corrugated steel cladding and exposed steel beams on the interior. The house takes advantage of solar gain from the steel envelope through an innovative skin-integrated solar thermal system that pre-heats hot water. To allow additional diffuse light and promote stack ventilation, each cylinder has two operable skylights. The house’s landscape pioneers cutting-edge grey water filtration research, using a Nutrient Film Technique (NFT) System. By flowing a thin layer of wastewater over the roots of hydroponically grown plants, the system makes great strides in efficient water reclamation.

The interior program and aesthetic grew out of a motivation to build a healthy and productive human environment conscious of needs, locale, impact and form. Given the likely siting of our house in the wine region of the Finger Lakes near Ithaca, NY, the interior seeks to approach the agricultural and industrial aesthetic through a contemporary lens. Much care is taken in material selection to support locally situated businesses with strong environmental conscience and utilize sustainable, regenerative and environmentally benign materials. Locally sourced, and sustainably forested black locust, ash and beech hardwoods form the primary material palette that are complemented by the use of zero off-gassing finishes throughout the entirety of the house interior.

Staying faithful to the interdisciplinary student-run, design-build nature of the project, the interior was approached as an opportunity for students to develop creative solutions for the inherent formal and spatial restraints. The interiors scheme sought ideas for responsive systems that could provide the flexibility necessary to make a 500 square foot space comfortable while maintaining a loyalty to the purity of the circular form. Transformative elements satisfy these needs in all three rooms where the space becomes multifunctional and reconfigurable, while complementing a healthy and active lifestyle in the home.

At first glance, a compact, monolithic kitchen island appears only as a countertop, yet a graceful transformation reveals a complete, energy-efficient cooking system that affords all cooking and entertaining activities. A secondary transformative element exists in the bedroom where the conventional static nature of the bed is challenged, producing a dynamic counterweighted bed system that effortlessly rises into a concealed ceiling box to create a open and usable space in its footprint. Use of a NanaWall™ system as the boundary between the courtyard, bedroom, and living room respectively, blurs the distinction between interior and exterior space. Its reconfiguration unifies the two to support a wide range of unique activities.

Through its novel approach to modular design, interplay between conditioned and unconditioned space, and creative applications of university research, the 2009 CUSD team hopes to redefine preconceived notions of the limitations of a solar-powered home.

MARKET VIABILITY JUSTIFICATION

While the 2009 CUSD solar house could be marketed broadly, the team has focused on a niche market, keeping in mind that the last two Cornell University Solar Decathlon houses have been permanently sited on the wine trail outside of Ithaca, in Lansing, NY on the shores of Cayuga Lake. Cornell's third solar house defies convention; it is compact, self-sufficient, and not meant to be altered for an addition. Because of its size and independent personality, the house would be ideal for a couple on any short or long-term vacation retreat. The house showcases bold aesthetics and innovative technologies that surpass traditional residential home design.

Our team conducted a survey of 277 participants primarily located in the Finger Lakes region of upstate New York. The survey identified our target market as empty-nesters, 31-60 years of age, in the middle to high-middle income brackets, who currently own one property (sixty percent of survey respondents fit this description). Ninety percent of respondents were favorable to solar energy and agreed that investing in alternative energy is important.

Target Market

Our house is designed to suit the outdoor, dynamic lifestyle of a modern couple residing in or visiting Ithaca, N.Y. The potential buyers are intended to be a 50-year old, active couple with an average household income of $100,000. The 800 SF house might be small for full-time habitation, but would be ideal for a getaway in the rural wine country of upstate New York.

Target Market Description

Market I.D. Parameter	Target Market
Location of Permanent Site	Cayuga Lake, Ithaca, N.Y.
Housing Type	Vacation retreat
No. of Occupants	2
Occupant Demographic	Empty nesters, age 50
Homeowner Annual Income	$100,000
No. of Bedrooms	1

Homeowner Profile

A hypothetical profile of the homeowners would be an educated, informed, socially liberal couple, interested in technology, concerned about the environment, energy issues, carbon footprint, and climate change. They would engage a playful sense of style and be early adopters of new technology.

Design Aesthetic & Comfort

The design incorporates three cylinders, resembling local Ithaca grain silos, which frame an open rectilinear courtyard. Each circular module is autonomous with zoned heating and cooling and clearly delineated spaces punctuated by short hallways and the central courtyard which tie all rooms together. With the surrounding field grasses and Nutrient Film Technique (NFT) grey water reclamation system, the house assumes a contemporary, rural identity.

The interior décor is minimalist, combining industrial aesthetic with natural materials, including exposed steel beams, ash hardwood floors, and white-washed slats of ash as an interior wall finish. Thick butcher-block shelving reflects the openness of the space: each shelf is free-floating with no cabinetry to enclose it. Independent rectilinear furniture pieces, such as the folding island in the kitchen and the lifting bed in the bedroom, serve to open the space and contrast with the curved walls and shelves. The use of NanaWall's, proprietary sliding glass window-walls, operable tilt-turn windows, and Velux skylights in each cylinder promote natural ventilation and allow the interior space to open to the exterior.

The house is technologically advanced with a load panel that monitors energy consumption at outlets and a smart controls system that allows the user to optimize energy usage in their house and monitor systems from remote locations with a computer, blackberry, or iPhone.

ENGINEERING DESIGN NARRATIVE

The 2009 Cornell University Solar Decathlon (CUSD) house has been designed with a systems approach integrating its architectural and engineering elements. Each of its major systems (solar energy, solar thermal, plumbing, HVAC, and control technologies) has evolved and benefited from the experience of the last two Solar Decathlon competition houses while assimilating current and emerging technologies.

The house is built around a centralized core with all engineering systems located in the mechanical/electrical closet at the center of the house. The core allows a plug and play design in which each module can be pre-wired and pre-plumbed such that only a few simple connections are necessary before each module is fully functional.

Solar energy generation and conservation are the raison d'être of the 2009 CUSD house. Using only sunlight, two types of energy are produced: electrical energy and thermal energy. The photovoltaic (PV) system, which generates all the electricity for the house, consists of an array of 40 General Electrical 200W panels yielding 8kW nominally. This provides all the power necessary to run the various functions of the house including heating and cooling, lighting, appliances, pumps, computers, etc. Two inverters (PV Powered, Inc.) Convert the PV-produced direct current to alternating current. Unlike conventional inverters, these inverters have an integrated AC and DC disconnect, a simpler design which saves space in the already small house. The alternating current connects through a smart load panel (Computerized Electricity Systems), which not only monitors incoming energy from the photovoltaics, but measures real-time usage data from each individual circuit breaker controlling each circuit to optimize energy usage.

The 2009 CUSD house uses a sophisticated means of regulating ambient and water temperature. Thermal energy is collected by a system of 30 Silicon Solar SunMaxx U-30 evacuated tube collectors, mounted on the south-facing side of two cylinders. These evacuated tube collectors are highly efficient and are the primary means of generating heat.

CorTen corrugated steel, a material chosen for its aesthetics and favorable thermal properties, constitutes the exterior wall of the house. Building-integrated, fluid filled copper piping running behind the corrugations in the CorTen is heated by conduction through the steel skin, which then passes heat to water from the cold water supply as it passes in proximity to fill the domestic hot water tank. By preheating the water before it reaches the domestic hot water tank, the load on the evacuated tube solar collectors is reduced. This solar thermal system provides both hot water for faucets, showers, etc. and also provides heat energy by which the house is heated. This system is more efficient than using an electric heat pump and provides cooling by utilizing a reverse cycle chiller, a unit similar to an air-to-water heat pump. Instantaneous switchover between heating and cooling is an additional advantage of this design. Further efficiency is introduced by the use of storage tanks on the heating and cooling sides, reducing pump time and providing longer cycling times.

The plug-and-play modular design of the CUSD house is furthered by the implementation of zoned heating and cooling which allows the temperature of each module to be controlled independently. Automated variable air volume (VAV) dampers in the ductwork regulate each module's temperature by restricting the airflow through the ducts. Our house's ability to have zoned heating and cooling is also an energy-saving technique, as it avoids conditioning rooms when they are not in use. The advanced controls system monitors and analyzes all of the information coming from each system and relays signals back and forth for control and automation. Commercially available, industry-grade sensors and equipment provide feedback, which is logged on a centralized server. Information can be displayed on various devices in the house (such as the home entertainment computer, television, or touch screen panels), as well as remotely via a secure encrypted Internet connection. Allowing a user to control the functionality of the house anywhere in the world by any Internet connected device.

Complete systems integration between the architectural vision and engineering components of the house was a fundamental concern in the CUSD design. The house strives to be simple, efficient, and effective utilizing feedback among the central core, its component systems, and the occupant. We believe that our design will give Cornell an advantage with a technologically advanced house that is not only optimized for the highest potential energy efficiency, but is also easy to use and comfortable.

LIGHTING NARRATIVE

Interior and exterior lighting in the 2009 CUSD solar house is provided almost entirely through natural and LED lighting to reduce energy costs. A seamless relationship is established between simple architectural forms and the varying lighting conditions. Appropriate ambient and task lighting is provided for each space in the house through a careful balance of daylight and artificial light.

Column mounted combination up/downlights provide general lighting for the courtyard at night, and highlight the vertical structural elements defining the spatial “cube” of the courtyard. Uplighting also illuminates the drop cloth ceiling hung beneath the photovoltaic array. Direct illumination is specifically not provided surrounding the ethanol fireplace, which fits next to the mechanical closet and provides an added light feature to the outdoor space. Lighting in the landscape provides dramatic uplighting to the exterior shell of the building, drawing attention to the unique materiality of the building shell.

Inside, the benefits of natural daylight are emphasized through the outdoor courtyard space that connects to the interior through operable glass walls. These north-facing glass NanaWalls™ allow diffuse daylight to enter the house interior, without any glare issues. Furthermore, the high insulative properties of the glass protect the interior from heat or cooling loss. Windows punched into the CORTEN® cylinder shells of the house are placed strategically at the end of hallways to project views to the outside while moving through the house. Operable shading invites the inhabitant to control the levels of direct light these apertures emit. Skylights in each cylinder further provide diffuse daylight to rooms and promote natural stack ventilation in the house. Daylighting analysis was done using Radiance lighting analysis software. A daylight factor analysis was performed using a CIE overcast sky that produced 10,000 Lux on an exposed horizontal surface. As can be seen on E-901 of the drawing set, more than 80% of usable area of the building was above a 2% daylight factor, which implies that the North facing windows are working well to bring in diffuse light into the rooms. The “hot spots” that could produce glare are positioned in the hallways, allowing the light to bounce into the usable spaces while minimizing chances for direct glare in high use areas. Poorly daylit areas are primarily in the back corner of the bedroom and in the bathroom – spaces that do not usually require good task lighting or are used primarily when the sun is down.

Electric lighting illuminates the consistently curving walls and highlights the raw materiality of selected flat and curved surfaces of the space. Curvilinear tracks provide ceiling hung ambient lighting that follows the rooms' perimeters without interrupting the geometry of the exposed steel in the ceilings. Small fixtures along the tracks also provide a multitude of lighting conditions for different lighting needs, times of day and changing seasons. The continuity of the system and repetition of fixture type reflects the identical architectural nature of each space.

Strips of LED light provide discrete and even light to horizontal surfaces in the house. In the living room, under-shelf LED lighting illuminates the work surface for any number of uses. Under-shelf LED lighting appears again in the kitchen to provide work surface lighting for food preparation on the built in kitchen shelving. Ceiling hung pendants in the middle of the cylinder highlight the kitchen island centerpiece and provide extra downlighting for kitchen tasks.

Lighting simulations using Radiance display plenty of task lighting on the high task areas, in particular the kitchen counter (over 500 Lux), see E-902 in the drawings set. Hallway illumination is adequate at between 50 and 100 Lux. The desktop in the living room receives over 100 Lux.

Reminiscent of the under-shelf lighting elsewhere in the house, a light bar provides general lighting for the bathroom and illuminates the glass wall and mirror. The frosted glass wall between bathroom and bedroom allows for illumination to filter from one side to the other, creating a unique architectural lighting effect in the most private cylinder and offering obscured views between bedroom and bathroom.

Taking advantage of the dynamic features of the bedroom ceiling, recessed downlights directly above the bed illuminate the bedroom. LED discs provide spot downlighting from beneath built-in bedroom shelving for illumination of a wall-mounted mirror.

Overall, simple and elegant lighting throughout the house compliment the architectural intent and provide appropriate and flexible lighting levels for domestic life.

Public Exhibit

BROCHURE

The public exhibit handout is an informational and interactive postcard. A 14” x 5” postcard will be printed on cardstock or paper of similar weight by NanaWall™. To move beyond the traditional, self-advertising informational brochures, the public exhibit handout seeks engage the public via feedback postcards. The handout is a 4-way folded postcard that is perforated at the center. The front of the postcard reads as a whole, displaying a statistic highlighting the potential of solar energy. The back of the handout is split into two, one half recognizes our team sponsors and highlights innovative aspects of our home, while the second half provides space for the Decathlon visitors to provide us with their thoughts on our house, the presentation, what they could take away from it, and any personal efforts and/or contributions towards the use of solar energy and sustainable living. They will be asked to either write a short paragraph and return it to us during the competition, or mail it to our campus. The returned postcards will be compiled and used in a post-competition exhibit.

TEAM UNIFORM

Team uniforms will consist of short-sleeve, white cotton shirt with the CUSD team logo and tagline on the front, left chest (see Image 1 & 2). Members will wear khaki shorts to be comfortable, yet presentable.

Image 1: Image of Team Uniform Shirt

SLIDESHOW

The television in the living room will display presentation material during the tours of the 2009 Cornel house. The presentation will incorporate video + graphic visual materials to highlight innovative features of the house, design concepts, interesting facts, and to recognize and thank our sponsors.

Image 2: CUSD logo to be embroidered on the uniform shirts

ADDITIONAL MATERIALS

A large-format interactive poster will be displayed along Decathlete Way within the house envelope. The poster includes several statistics and informational graphics regarding solar energy, information on the team, our mission and concept, and will highlight the systems that the visitors will see installed in the house. Given that these boards will be placed in a highly populated zone, each poster will be interactive, allowing the users to learn about solar energy and our house as they stand on line.

Additionally, a textual information system will utilized throughout the house to highlight specific products, completed tests, and interesting facts about the house. Letter decals will be used and non-permanently attached directly to the interior walls of the house. These short placards will allow tour groups to individually read the information, and become more involved in the tour of the home. (see Images 3-6)

TEAM SPONSOR RECOGNITION

- Team sponsors will be listed on our brochure, with order, size, and font color dependent on the magnitude of the sponsor's recognition.
- Logos of team sponsors will be displayed on a slide of the slideshow described above.
- The most notable team sponsors (i.e., those who donated the most to the house) may be men tioned as part of the public house tour.
- A sponsor list as well as logos will be posted on the CUSD website and included in all press releases and media documents

EVENT SPONSOR RECOGNITION

- Logos of event sponsors will be on our postcard and public exhibit large-format poster.
- Logos of event sponsors will be displayed on a slide of the slideshow described above
- The event sponsors will be listed and logos posted on the CUSD website and included in all press releases and media documents

Image 3, 4: Public Exhibit postcard flyer
Dimensions: full, 5"x14"; folded, 5"x 3.5"

Image 5, 6: Public Exhibit Poster
Dimensions: 18" x 60"
additional graphics to be added