UNIVERSITY OF COLORADO

CONSTRUCTION DOCUMENTS

AUGUST 7TH 2007

"Preserving the beauty of the American West by uniting new technologies and time tested natural systems to transform the production home market."

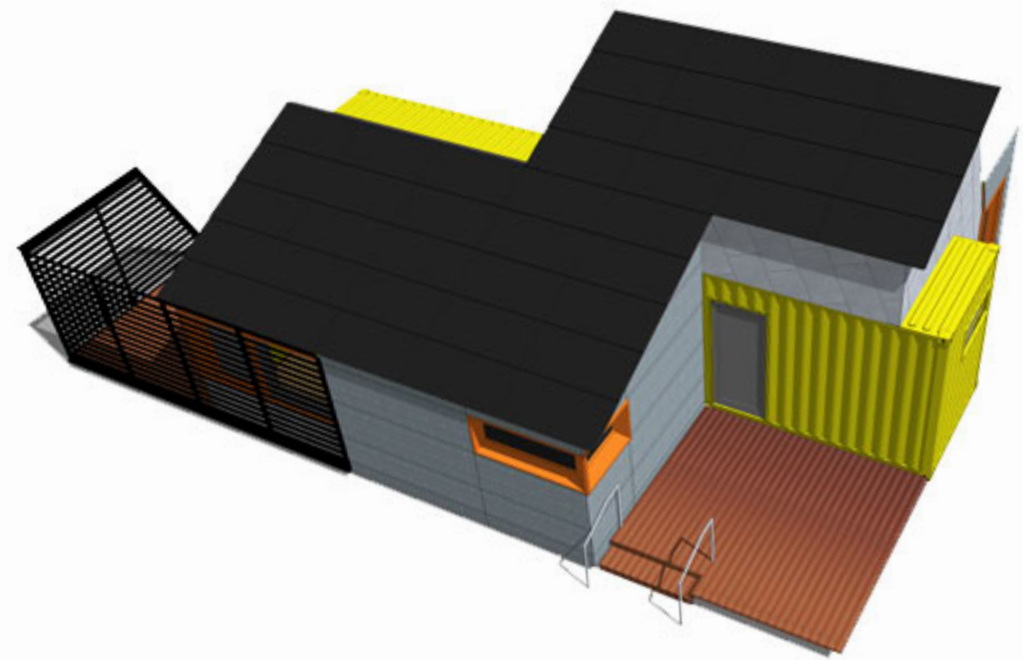

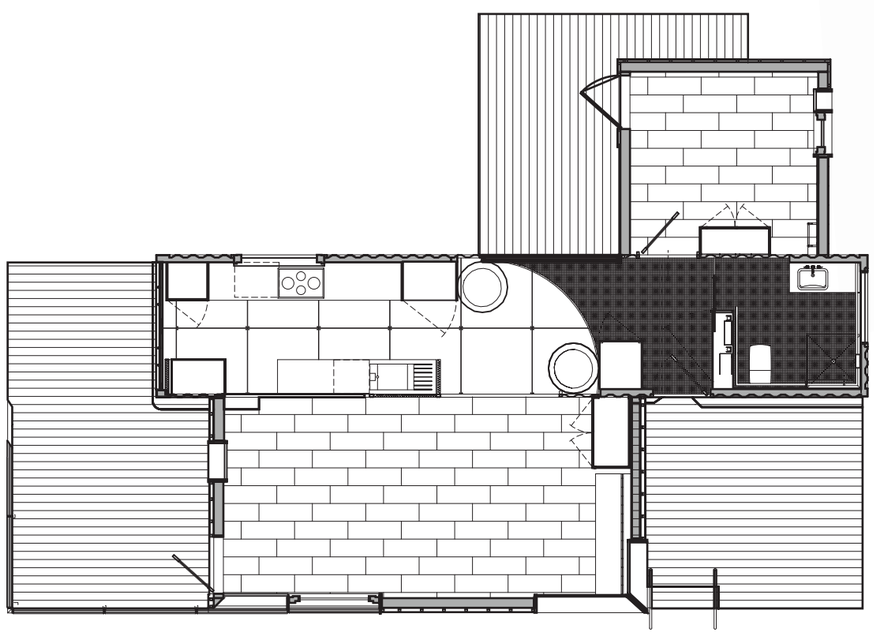

the national mall

119 117 115 113 109 107 105 103 101

120 118 116 114 112 110 108 106 104 102

G0.01	INDEX
G1.01	SITE PLAN
G2.01	NORTH/EAST ELEVATIONS
G2.02	SOUTH/WEST ELEVATIONS
A1.01	GROUND LEVEL FLOORPLAN
A1.02	ATTIC LEVEL FLOORPLAN
A1.03	ROOF PLAN
A1.11	GROUND LEVEL REFLECTED CEILING PLAN
A1.21	KITCHEN ENLARGED PLAN
A1.22	MECHANICAL SPACE ENLARGED PLAN
A1.23	BATH ENLARGED PLAN
A2.01	LONGITUDINAL BUILDING SECTION
A2.02	TRANSVERSE BUILDING SECTION
A2.03	TRANSVERSE BUILDING SECTION
A2.04	TRANSVERSE BUILDING SECTION
A3.01	NORTH EXTERIOR ELEVATION
A3.02	EAST EXTERIOR ELEVATION
A3.03	SOUTH EXTERIOR ELEVATION
A3.04	WEST EXTERIOR ELEVATION
A4.01	KITCHEN NORTH/SOUTH INTERIOR ELEVATION
A4.02	MECH/BATH NORTH/SOUTH INTERIOR ELEVATIONS
A4.03	MECH/BATH EAST/WEST INTERIOR ELEVATIONS
A4.04	BEDROOM/LOFT NORTH/SOUTH INTERIOR ELEVATIONS
A4.05	BEDROOM/LOFT EAST INTERIOR ELEVATIONS
A4.06	BEDROOM/LOFT WEST INTERIOR ELEVATIONS
A4.07	OFFICE/LIVING NORTH INTERIOR ELEVATIONS
A4.08	OFFICE/LIVING SOUTH INTERIOR ELEVATIONS
A4.09	OFFICE/LIVING EAST/WEST INTERIOR ELEVATIONS
A5.01	ROOF DETAILS
A5.02	ROOF DETAILS
A5.03	ROOF DETAILS
A5.04	ROOF DETAILS
A5.05	ROOF DETAILS
A5.06	WALL DETAILS
A5.07	WALL DETAILS
A5.08	WALL DETAILS
A5.09	SIP/SITE GLAZING DETAILS
A5.10	SIP/SITE GLAZING DETAILS
A5.11	SIP/SITE OPERABLE WINDOW DETAILS
A5.12	SIP/SITE OPERABLE WINDOW DETAILS
A5.13	LOUVER DETAILS @ MECH. ATTIC
A5.14	OPERABLE CLERESTORY DETAILS
A5.15	S.C. WINDOW DETAILS
A5.16	LOFT CLERESTORY WINDOW DETAILS

A6.01	KITCHEN CABINET SECTION A–A
A6.02	KITCHEN CABINET SECTION B–B
A6.03	KITCHEN CABINET SECTION C–C
A6.04	KITCHEN CABINET SECTION D–D
A6.05	KITCHEN CABINET SECTION E–E
A6.06	KITCHEN CABINET SECTION F–F
A6.07	KITCHEN CABINET SECTION G–G
A6.08	BATH CABINET SECTION H–H
A6.09	FAT WALL SECTION
A6.10	FAT WALL SECTION
A6.11	FATWALL PLAN DETAIL
A6.12	BEDROOM CLOSET SECTION
A6.13	OFFICE CLOSET SECTION
A6.14	OFFICE CLOSET SECTION
A6.15	OFFICE SECTION AT DESK
A6.16	SINK SECTIONS
A6.17	SINK ELEVATION DETAIL
A7.01	COMPLETE HOUSE FLOORPLAN
A7.02	COMPLETE HOUSE ROOF PLAN
A7.11	COMPLETE HOUSE REFLECTED CEILING PLAN
A7.21	COMPLETE HOUSE TRANSVERSE BUILDING SECTIONS
A7.31	NORTH/SOUTH ELEVATIONS
A7.32	EAST/WEST ELEVATIONS
A7.33	SOUTH EXTERIOR ELEVATION
A8.01	WINDOW/DOOR SCHEDULE
A8.02	PLUMBING FIXTURE SCHEDULE
A8.03	APPLIANCE SCHEDULE
A8.03	HARDWARE SCHEDULE
CC1.01	TOTAL FOOTPRINT PLAN
CC1.02	TOTAL CONDITIONED SPACE PLAN
CC1.03	TOUR ROUTE
CC1.04	TOUR ROUTE
CC1.05	ACCESSIBLE TOUR ROUTE
CC1.06	ACCESSIBLE TOUR ROUTE
CC1.07	GARAGE SCHEMATIC
CC1.08	FURNITURE PLAN
CC1.09	ARRIVAL
CC1.10	STEP 1: FOUNDATION PADS
CC1.11	STEP 2: CONTAINER PLACEMENT
CC1.12	STEP 3: SIP PLACEMENT
CC1.13	STEP 4: BIPV ROOF PLACEMENT
CC1.14	DISSASSEBMLY STEP 1
CC1.15	DISSASSEBMLY STEP 2
CC1.16	DISSASSEBMLY STEP 3
CC1.17	DISSASSEBMLY STEP 4
F1.01	EGRESS PLAN
F1.11	FIRE PROTECTION PLAN

M1.01	HVAC ZONING PLAN
M1.11	GROUND LEVEL HVAC DUCTWORK PLAN
M1.12	ATTIC LEVEL HVAC DUCTWORK PLAN
M1.21	GROUND LEVEL HVAC PIPING PLAN
M1.22	ATTIC LEVEL HVAC PIPING PLAN
M1.31	PV ROOF PLAN
M1.32	PV FRAME SUPPORT PLAN
M1.33	PV FRAME BLOCKING PLAN
M1.34	PVT ABSORBER PLAN
M2.01	MECHANICAL PIPING ONE–LINE DIAGRAM
M2.02	MECHANICAL DUCTWORK ONE–LINE DIAGRAM
M3.01	HEAT PUMP CABINET
M3.02	HEAT PUMP CABINET
M3.03	HEAT PUMP CABINET
M3.04	HEAT PUMP CABINET
M3.31	PVT ASSEMBLY SECTION
M4.01	CONTROL SCHEMATICS
M4.02	CONTROL DEVICES
M6.01	GENERAL MECHANICAL DETAILS
M6.02	RADIANT ELEMENT DETAILS
M6.03	RADIANT ELEMENT DETAILS
M6.04	RADIANT ELEMENT DETAILS
M6.05	FAN COIL DETAILS
M6.31	PVT ABSORBER DETAILS
M6.41	THERMAL STORAGE TANK
M6.42	THERMAL STORAGE TANK
M7.01	COMPLETE HOUSE HVAC ZONING PLAN
M7.11	COMPLETE HOUSE HVAC DUCTWORK PLAN
M7.21	COMPLETE HOUSE HVAC PIPING PLAN
M8.01	MECHANICAL LEGENDS AND NOTES
M8.02	MECHANICAL SCHEDULES
M8.03	MECHANICAL SCHEDULES
M8.04	MECHANICAL SCHEDULES
P1.01	GROUND LEVEL PLUMBING SUPPLY PLAN
P1.11	GROUND LEVEL PLUMBING DWV PLAN
P7.01	COMPLETE HOUSE PLUMBING SUPPLY PLAN
P7.02	COMPLETE HOUSE PLUMBING SUPPLY PLAN
P7.11	COMPLETE HOUSE PLUMBING DWV PLAN
P7.12	COMPLETE HOUSE PLUMBING DWV PLAN
P8.01	PLUMBING SCHEDULES
P8.02	PLUMBING COMPETITION REQUIREMENTS

1 INDEX

Drawn by	Date
C. Corbin	August 7, 2007
Revised	Date

2007 Solar Decathlon

University of Colorado at Boulder
Civil, Environmental, and Architectural Engineering
428 UCB, Room ECCE 441
Boulder, CO 80309-0428

Index

G0.01

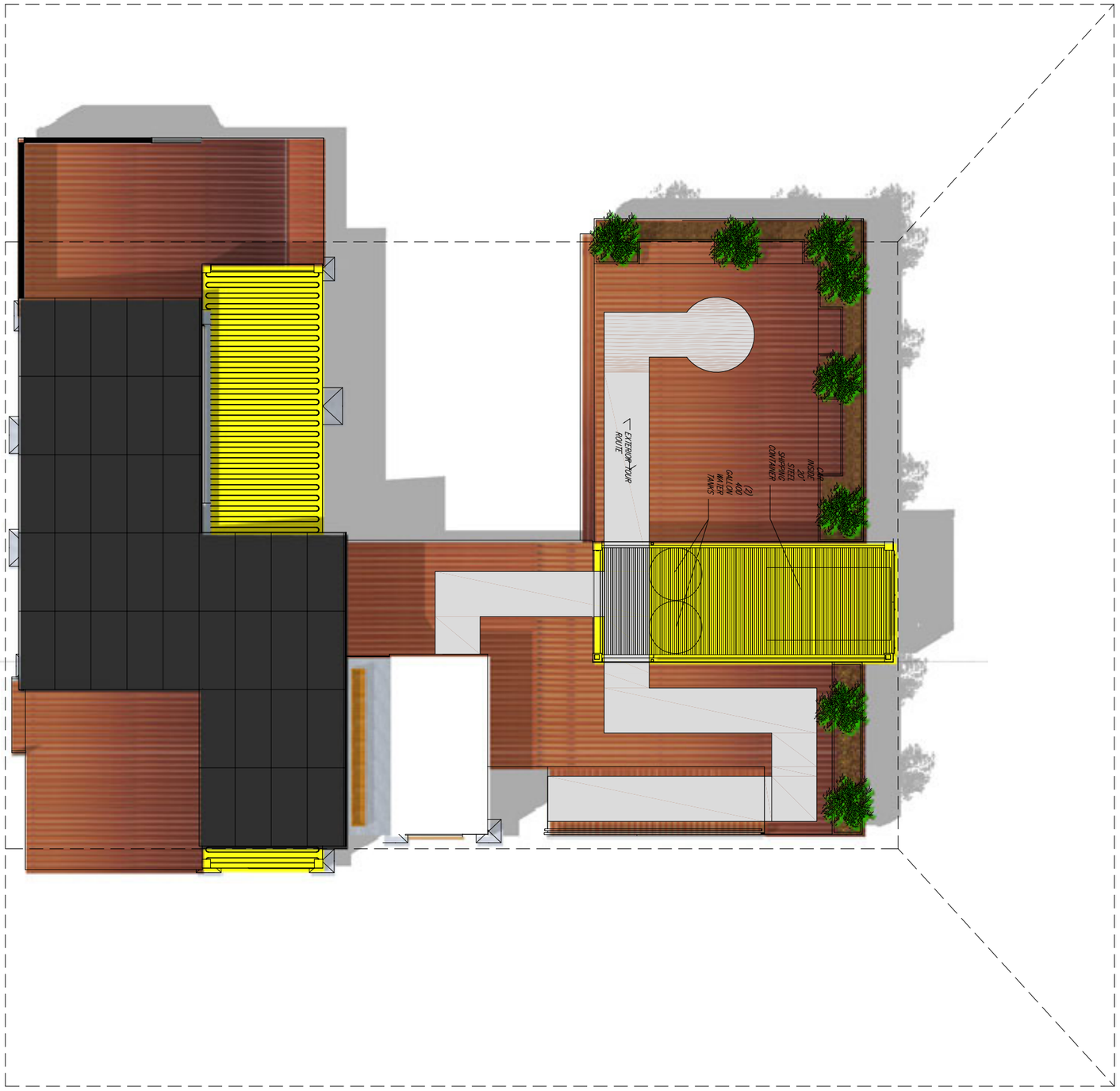

1 SITE PLAN

1/8" = 1'-0"

Drawn by	Date
S. Hauze	August 7, 2007
Revised	Date

2007 Solar Decathlon

University of Colorado at Boulder
Civil, Environmental, and Architectural Engineering
428 UCB, Room ECCE 441
Boulder, CO 80309-0428

Site Plan

0 2' 4' 8' 16'

G1.01

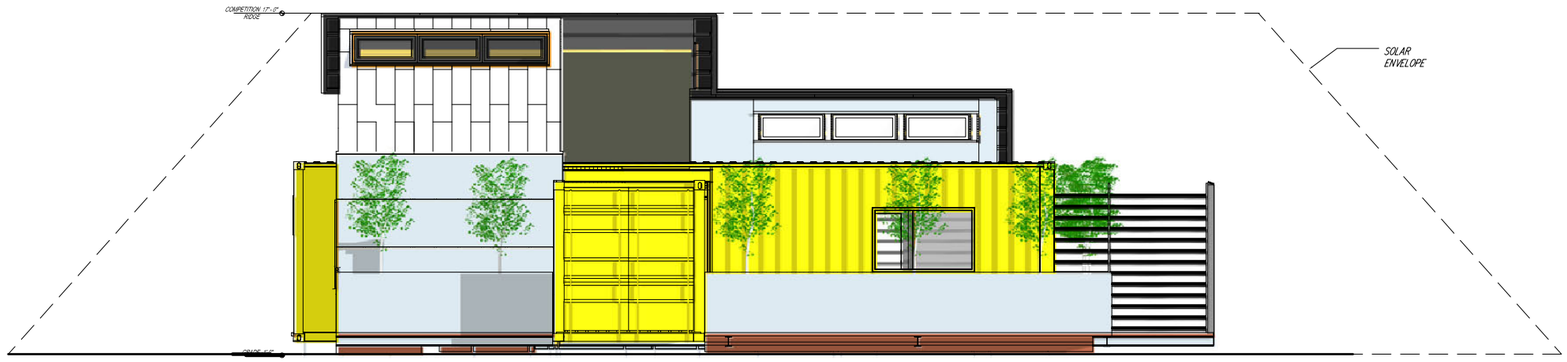

1 NORTH SITE ELEVATION

1/8" = 1'-0"

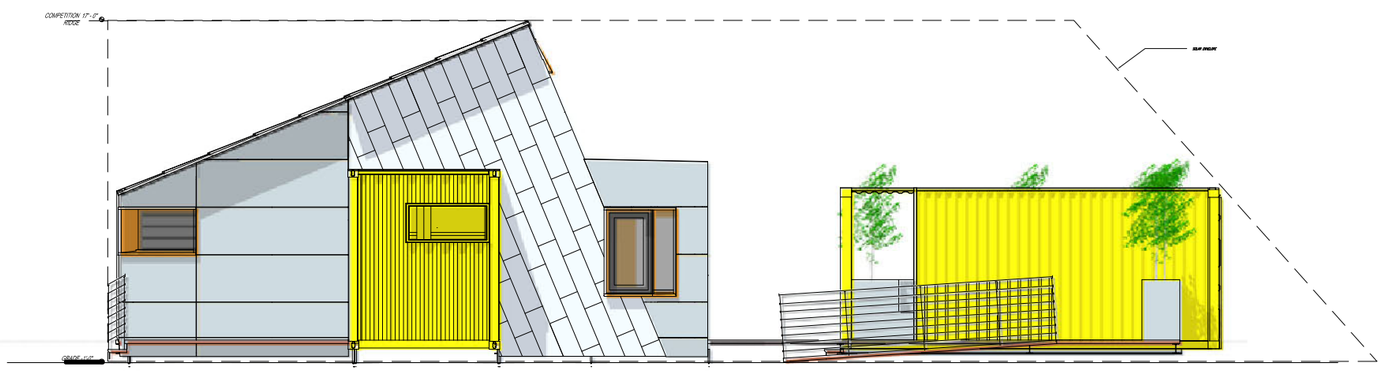

2 EAST SITE ELEVATION

1/8" = 1'-0"

Drawn by	Date
S. Hauze	August 7, 2007
Revised	Date

2007 Solar Decathlon

University of Colorado at Boulder
Civil, Environmental, and Architectural Engineering
428 UCB, Room ECCE 441
Boulder, CO 80309-0428

Site Elevations

0 2' 4' 8' 16'

G2.01

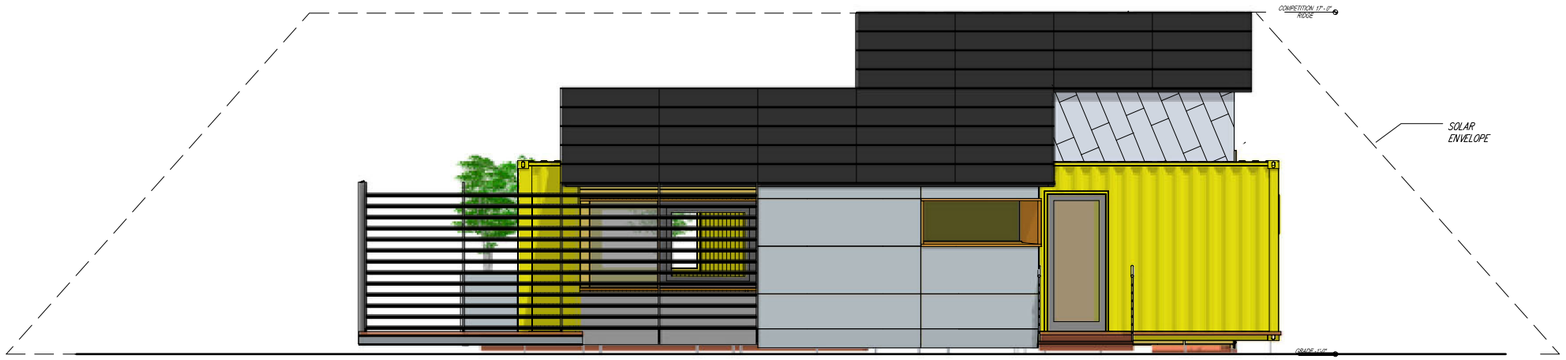

1 SOUTH SITE ELEVATION

1/8" = 1'-0"

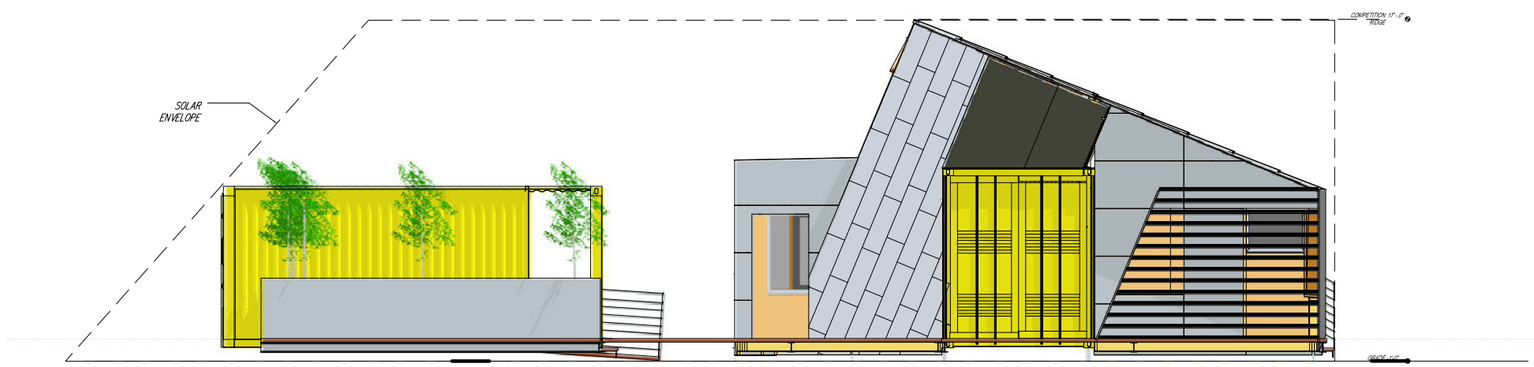

2 WEST SITE ELEVATION

1/8" = 1'-0"

Drawn by	Date
S. Hauze	August 7, 2007
Revised	Date

2007 Solar Decathlon

University of Colorado at Boulder
Civil, Environmental, and Architectural Engineering
428 UCB, Room ECCE 441
Boulder, CO 80309-0428

Site Elevations

0 2' 4' 8' 16'

G2.02

NOTE: ALL DIMENSIONS ARE TO F.O. S.I.P. OR
SHIPPING CONTAINER CORNER CASTING

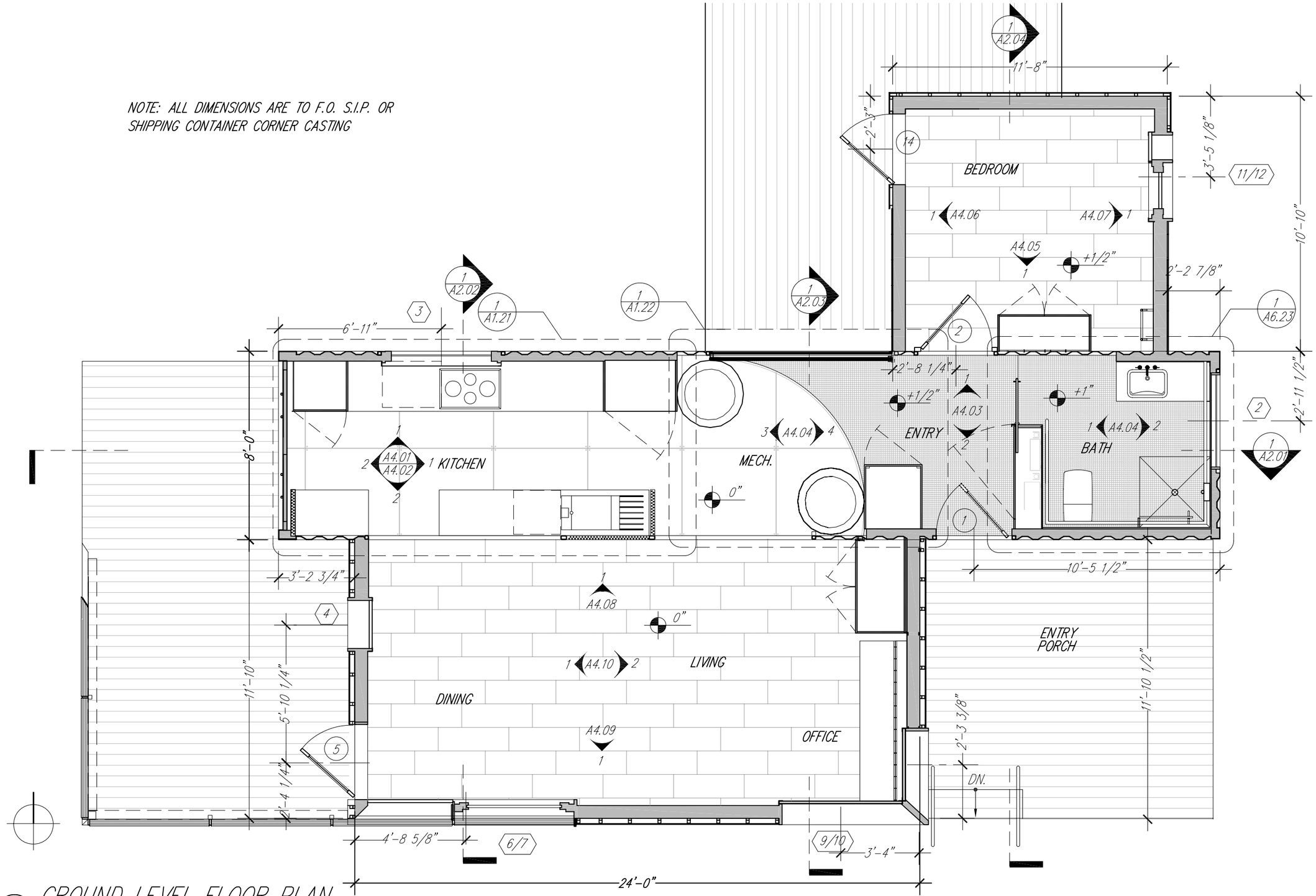

1 GROUND LEVEL FLOOR PLAN

1/4" = 1'-0"

Drawn by	Date
A.Rude	August 7, 2007
Revised	Date

2007 Solar Decathlon

University of Colorado at Boulder
Civil, Environmental, and Architectural Engineering
428 UCB, Room ECCE 441
Boulder, CO 80309-0428

Ground Level Plan

0 1' 2' 4' 8'

A1.01

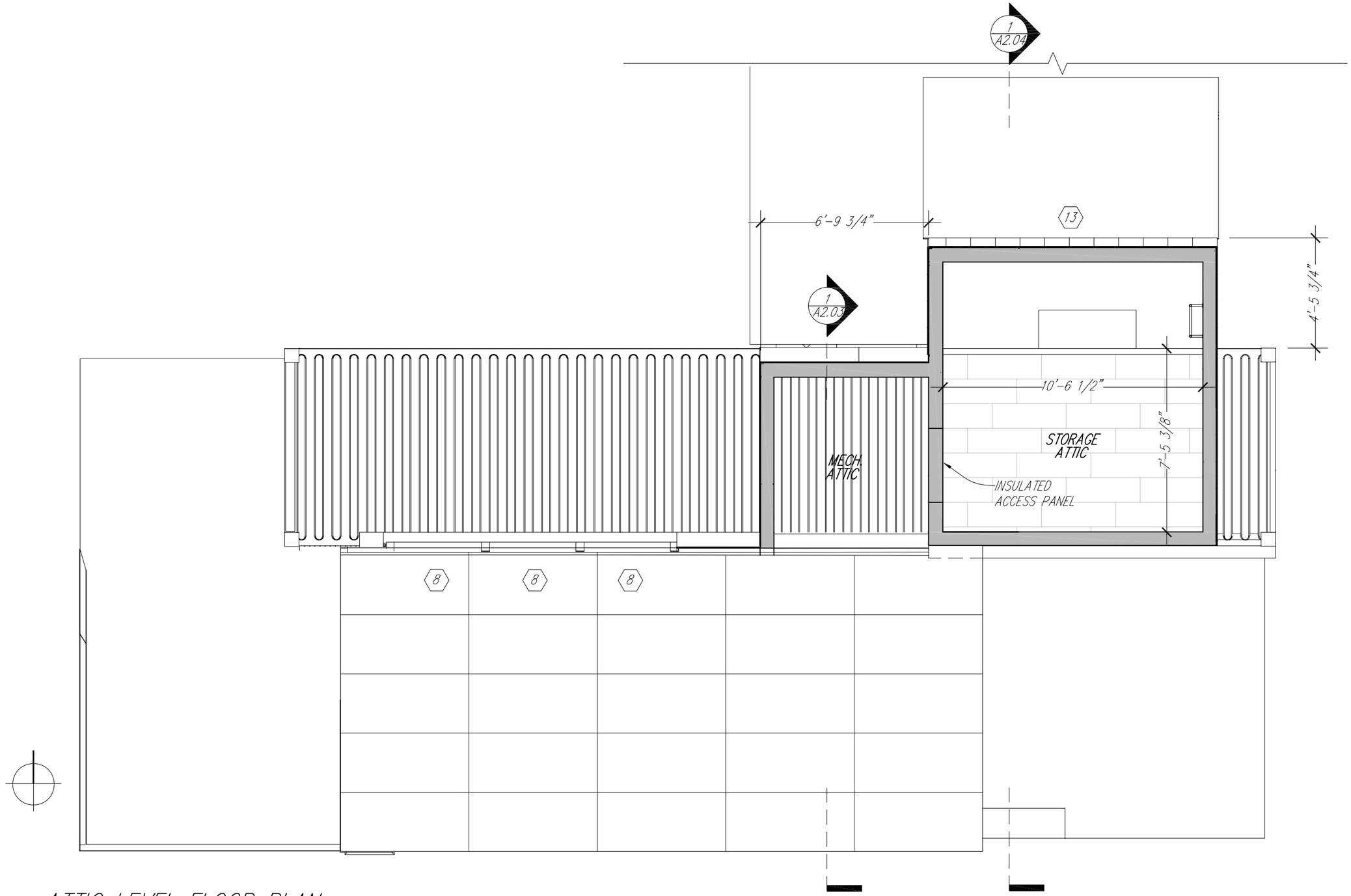

1 ATTIC LEVEL FLOOR PLAN

1/4" = 1'-0"

Drawn by	Date
A.Rude	August 7, 2007
Revised	Date

2007 Solar Decathlon

University of Colorado at Boulder

Civil, Environmental, and Architectural Engineering
428 UCB, Room ECCE 441
Boulder, CO 80309-0428

Attic Level Plan

0 1' 2' 4' 8'

A1.02

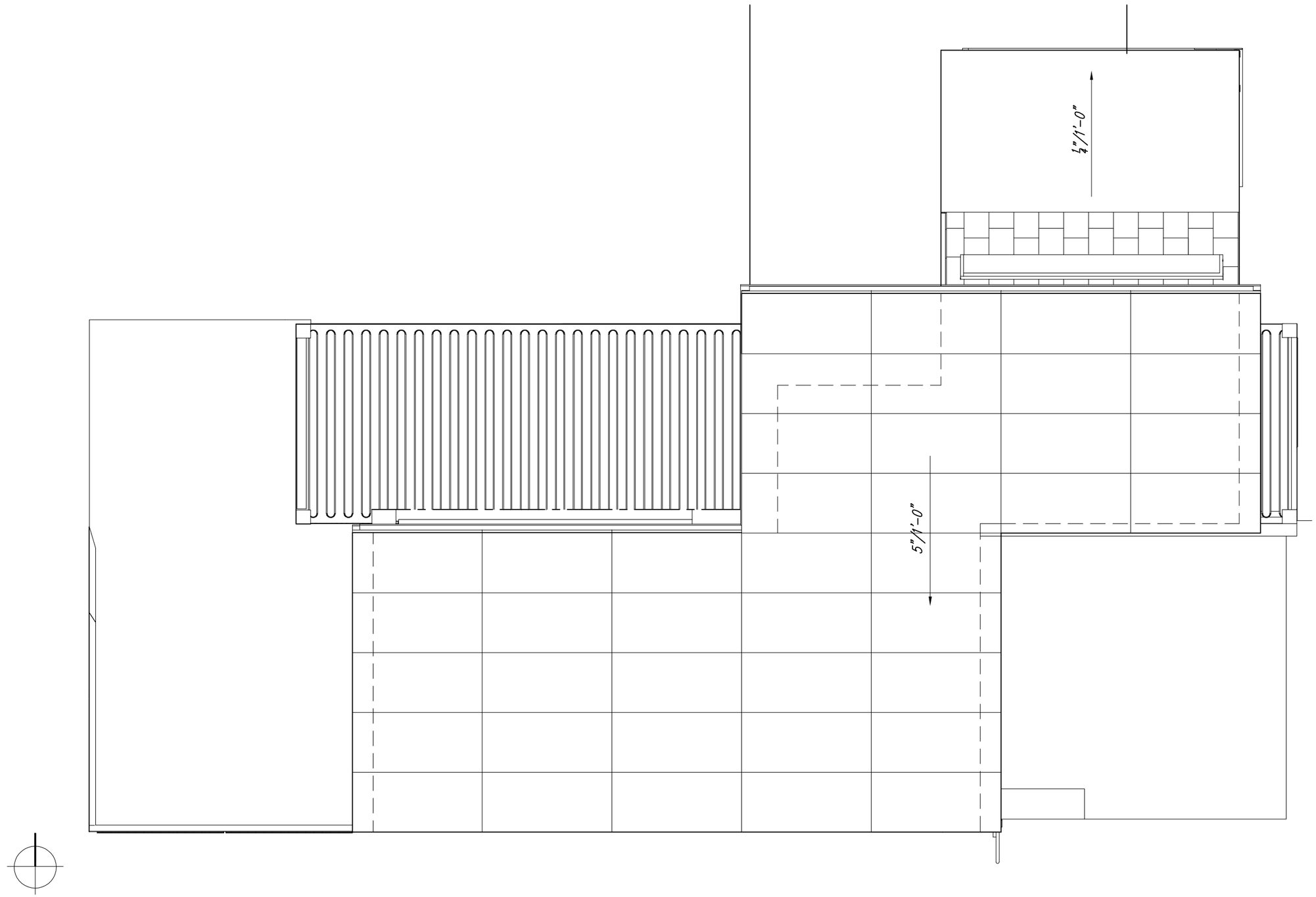

1 ROOF PLAN

1/4" = 1'-0"

Drawn by	Date
A.Rude	August 7, 2007
Revised	Date

2007 Solar Decathlon

Roof Plan

0 1' 2' 4' 8'

University of Colorado at Boulder
Civil, Environmental, and Architectural Engineering
428 UCB, Room ECCE 441
Boulder, CO 80309-0428

A1.03

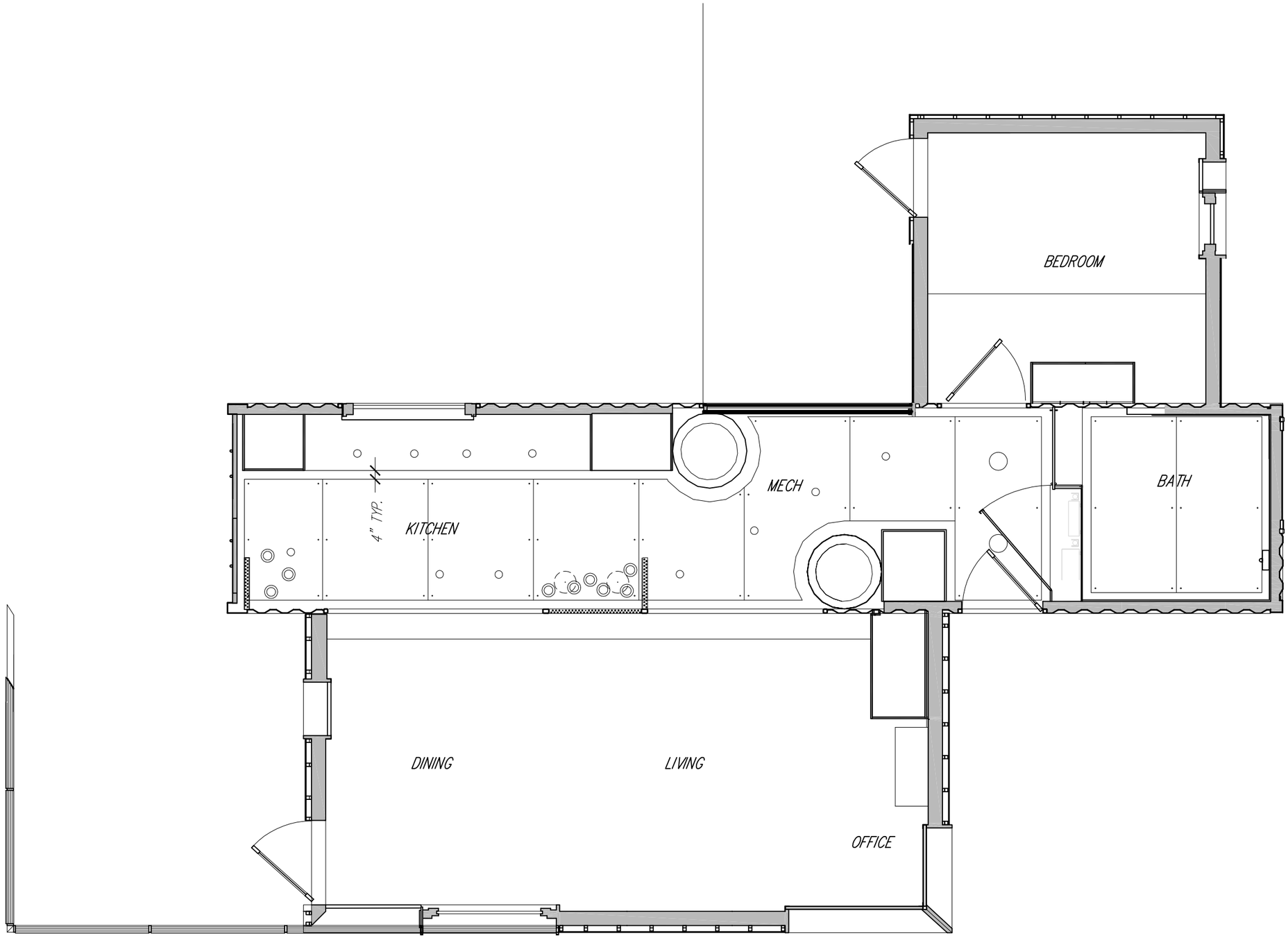

1 GROUND LEVEL REFLECTED CEILING PLAN
1/4" = 1'-0"

Drawn by	Date
A.Rude	August 7, 2007
Revised	Date

2007 Solar Decathlon

University of Colorado at Boulder
Civil, Environmental, and Architectural Engineering
428 UCB, Room ECCE 441
Boulder, CO 80309-0428

Reflected Ceiling Plan

0 1' 2' 4' 8'

A1.11

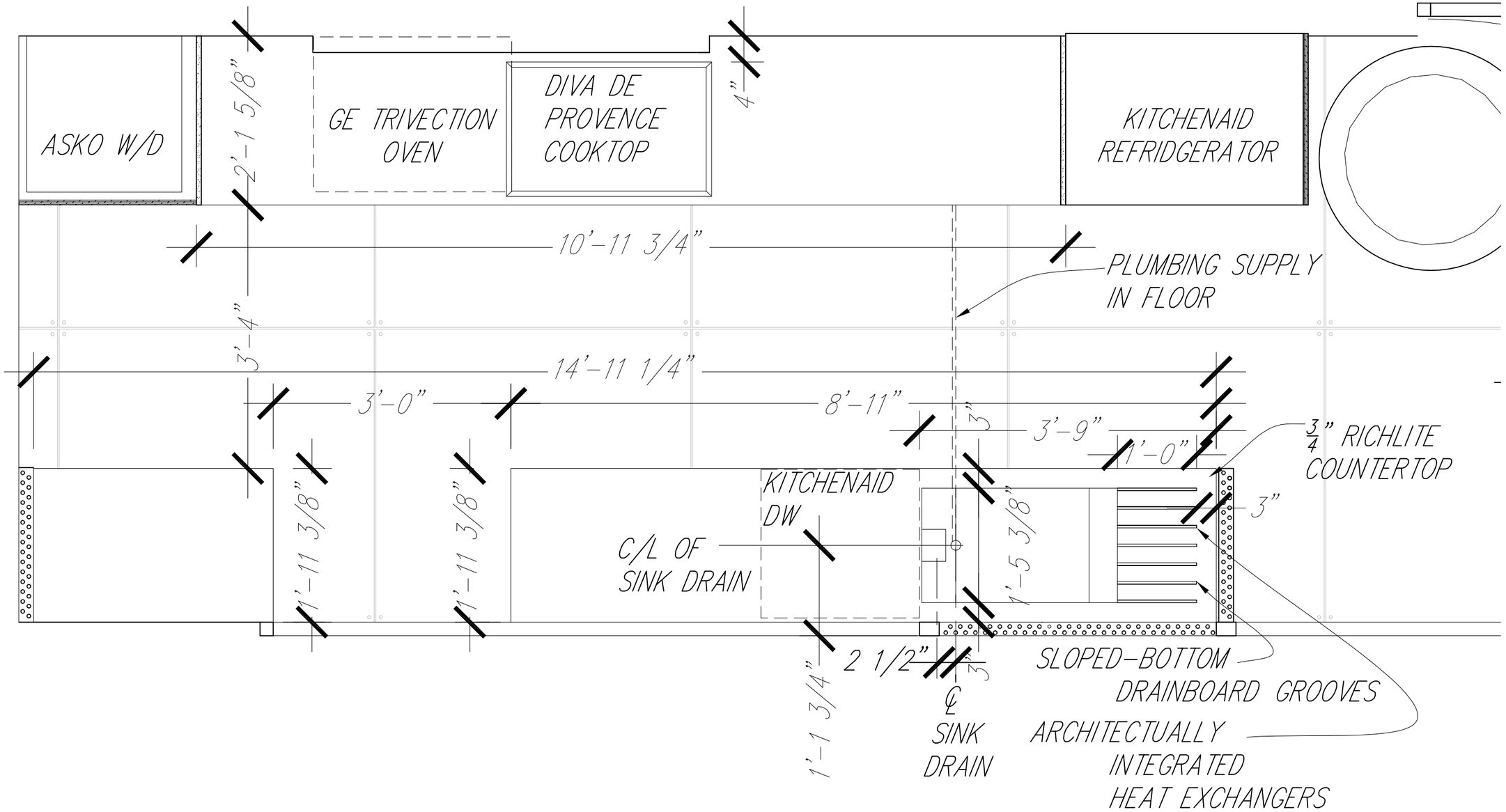

1 ENLARGED KITCHEN PLAN
3/4" = 1'-0"

Drawn by	Date
A.Rude	August 7, 2007
Revised	Date

2007 Solar Decathlon

University of Colorado at Boulder
Civil, Environmental, and Architectural Engineering
428 UCB, Room ECCE 441
Boulder, CO 80309-0428

Enlarged Kitchen Plan

0 6" 1" 2' 4'

A1.21

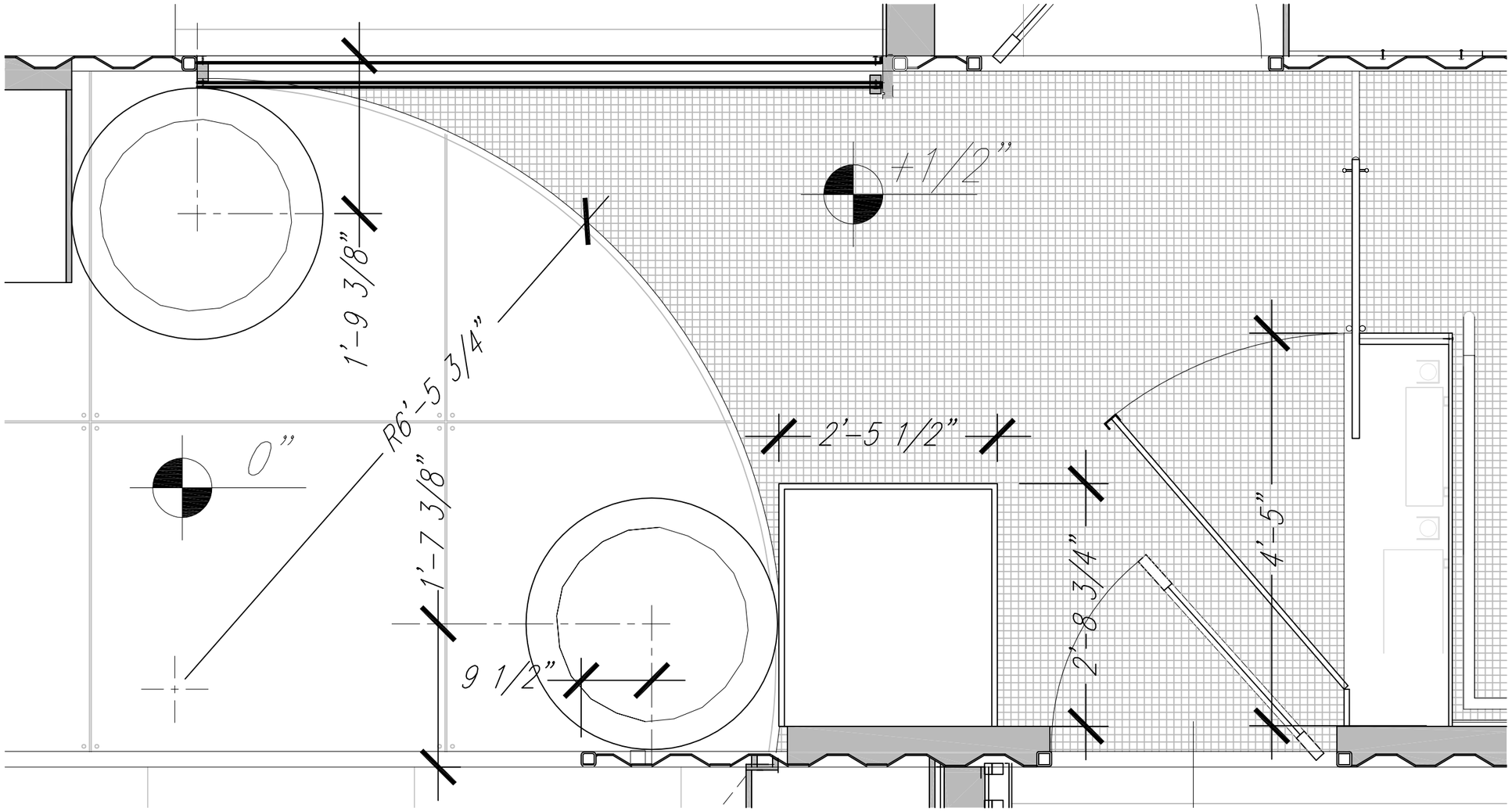

1 MECHANICAL SPACE ENLARGED PLAN
3/4" = 1'-0"

Drawn by	Date
A.Rude	August 7, 2007
Revised	Date

2007 Solar Decathlon

University of Colorado at Boulder
Civil, Environmental, and Architectural Engineering
428 UCB, Room ECCE 441
Boulder, CO 80309-0428

Mechanical Space Enlarged Plan

0 6" 1' 2' 4'

A1.22

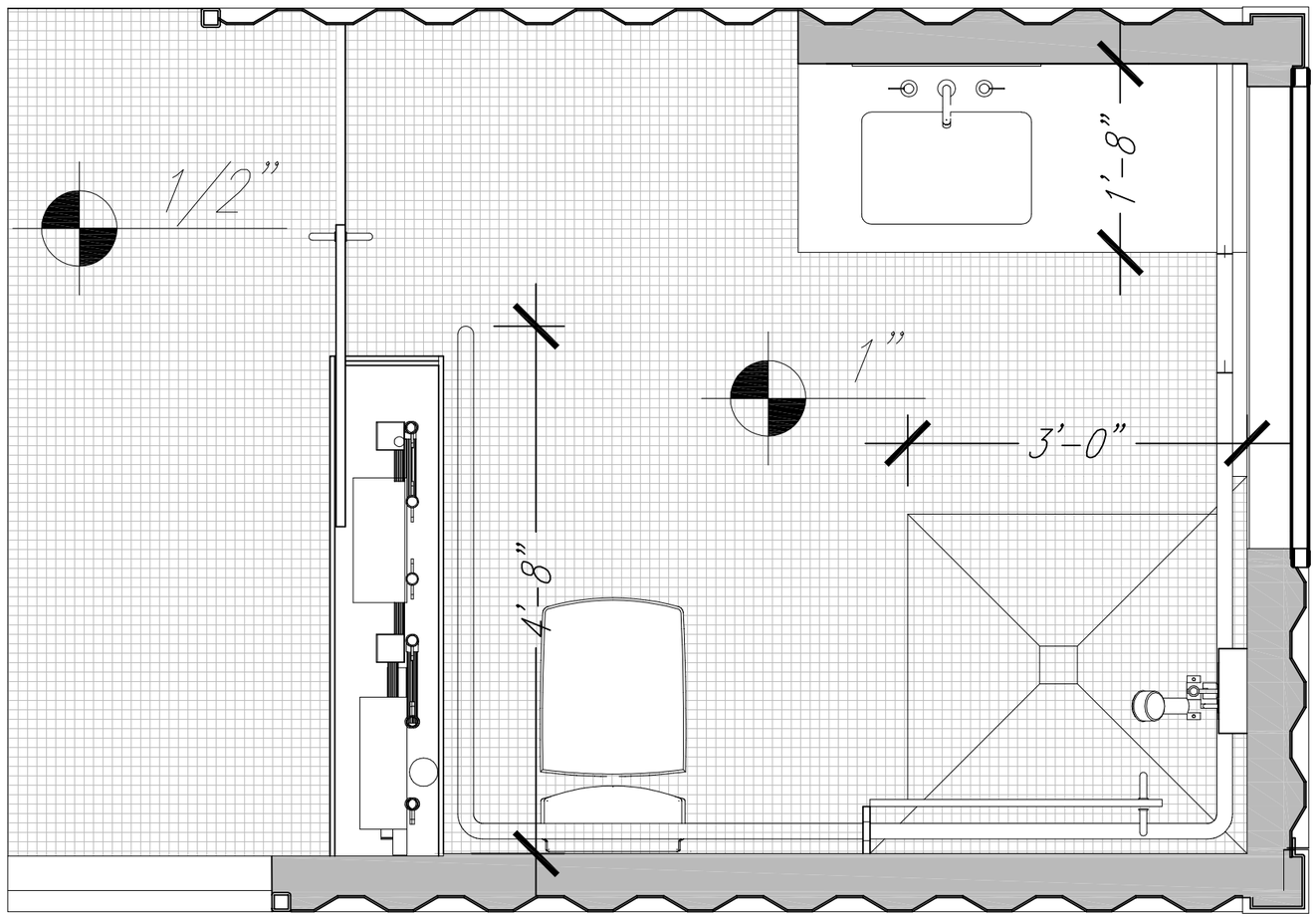

1 BATH ENLARGED PLAN
3/4" = 1'-0"

Drawn by	Date
A.Rude	August 7, 2007
Revised	Date

2007 Solar Decathlon

University of Colorado at Boulder
Civil, Environmental, and Architectural Engineering
428 UCB, Room ECCE 441
Boulder, CO 80309-0428

Enlarged Bath Plan

0 6" 1' 2' 4'

A1.23

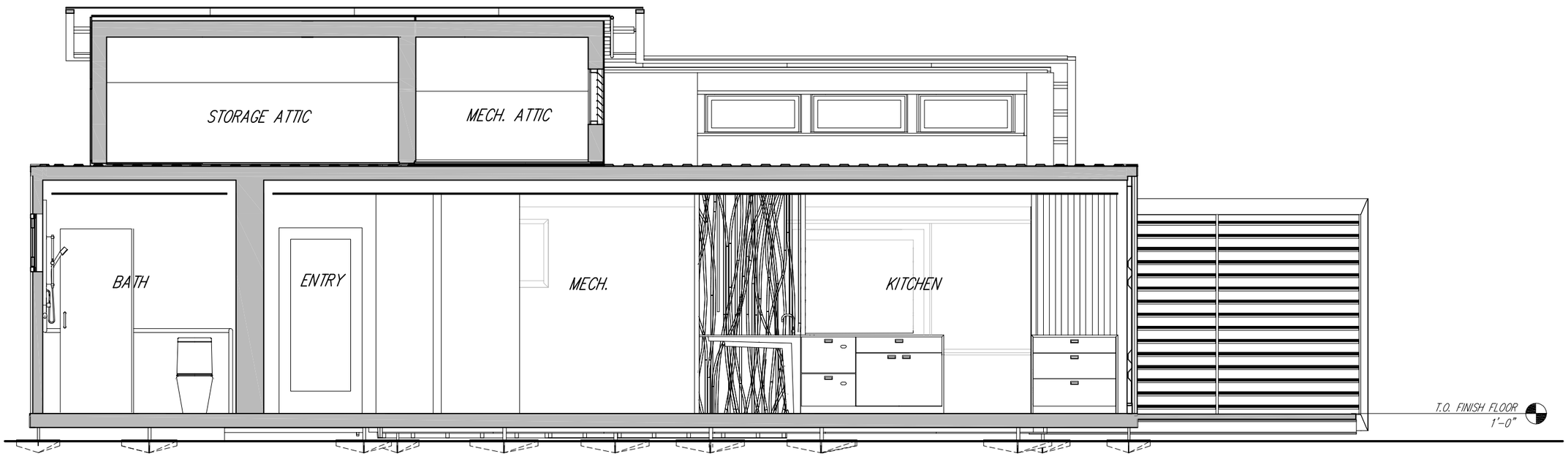

1 LONGITUDINAL BUILDING SECTION

1/4" = 1'-0"

Drawn by	Date
A.Rude	August 7, 2007
Revised	Date

2007 Solar Decathlon

University of Colorado at Boulder
Civil, Environmental, and Architectural Engineering
428 UCB, Room ECCE 441
Boulder, CO 80309-0428

Longitudinal Building Section

0 1' 2' 4' 8'

A2.01

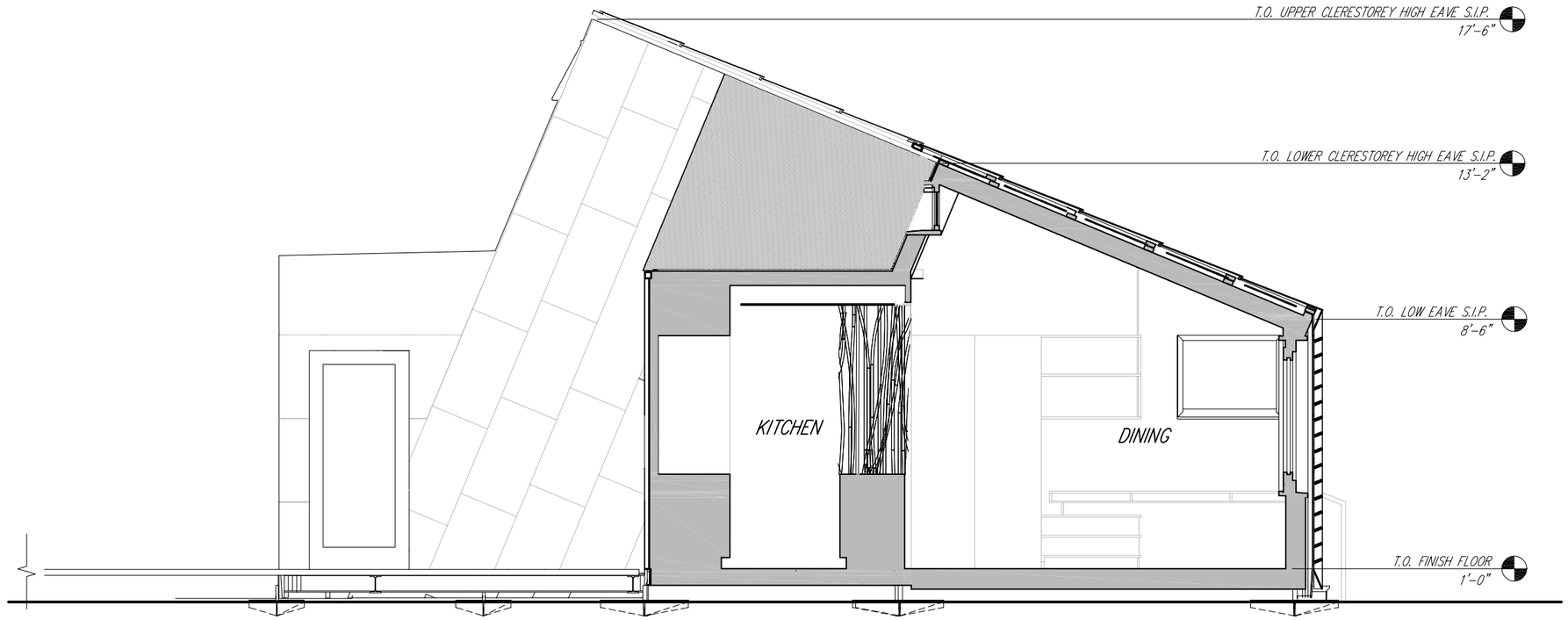

1 TRANSVERSE BUILDING SECTION AT LOWER CLERESTOREY

1/4" = 1'-0"

Drawn by	Date
A.Rude	August 7, 2007
Revised	Date

2007 Solar Decathlon

University of Colorado at Boulder

Civil, Environmental, and Architectural Engineering
428 UCB, Room ECCE 441
Boulder, CO 80309-0428

Transverse Building Section

0 1' 2' 4' 8'

A2.02

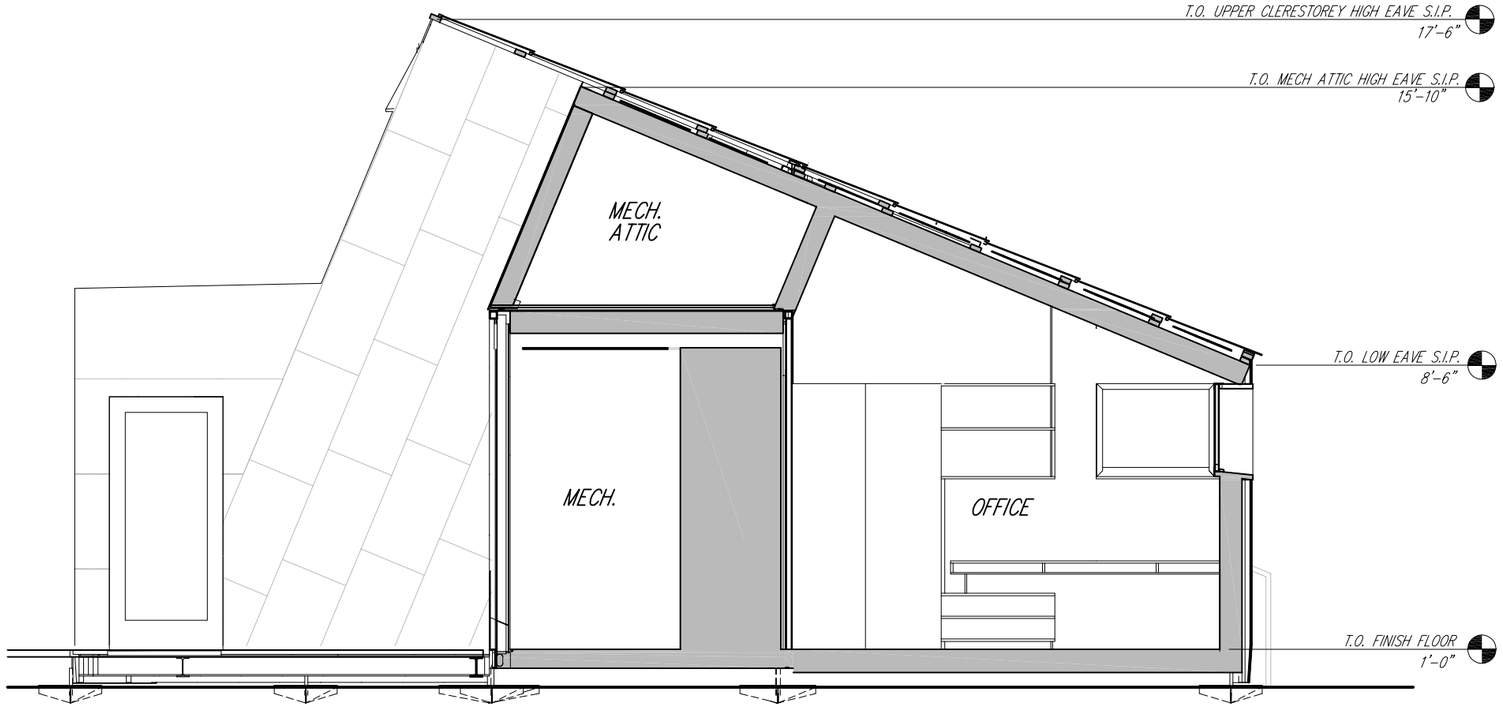

1 TRANSVERSE BUILDING SECTION AT MECHANICAL ATTIC

1/4" = 1'-0"

Drawn by	Date
A.Rude	August 7, 2007
Revised	Date

2007 Solar Decathlon

University of Colorado at Boulder

Civil, Environmental, and Architectural Engineering
428 UCB, Room ECCE 441
Boulder, CO 80309-0428

Transverse Building Section

0 1' 2' 4' 8'

A2.03

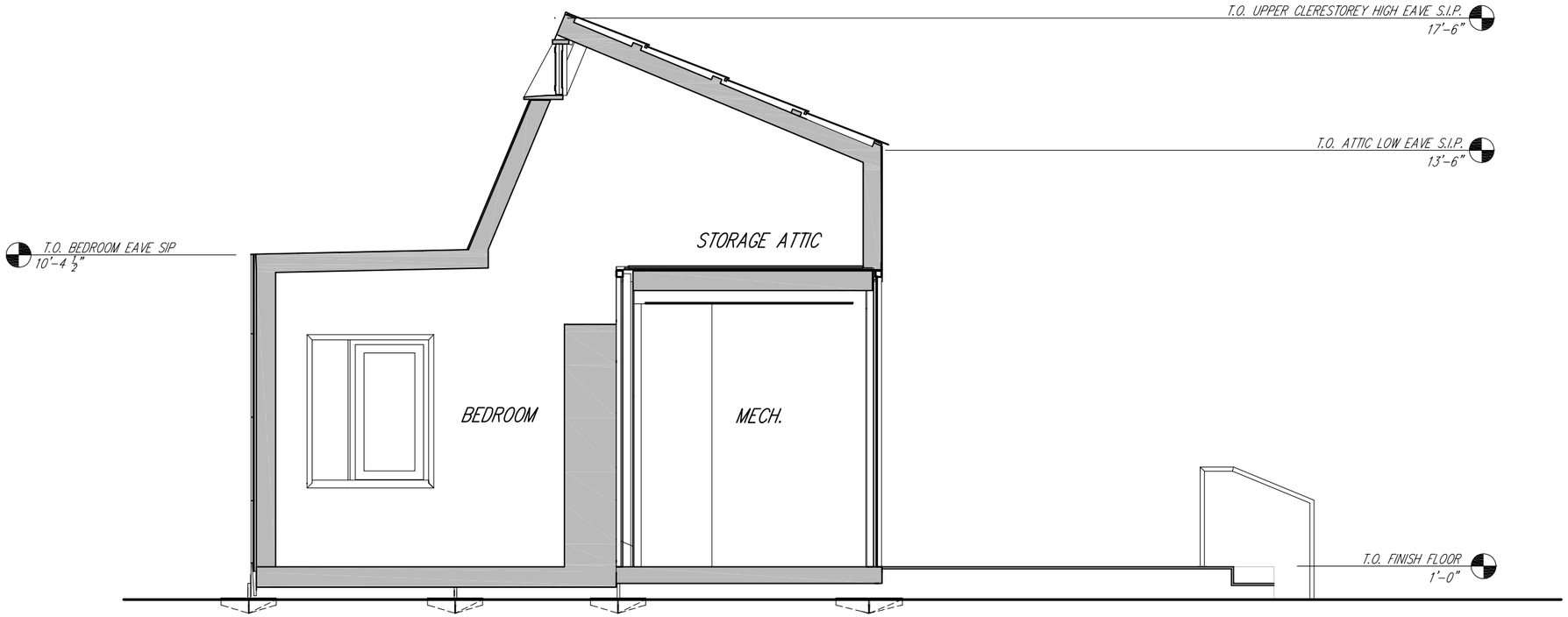

1 TRANSVERSE BUILDING SECTION AT UPPER CLERESTOREY

1/4" = 1'-0"

Drawn by	Date
A.Rude	August 7, 2007
Revised	Date

2007 Solar Decathlon

University of Colorado at Boulder

Civil, Environmental, and Architectural Engineering
428 UCB, Room ECCE 441
Boulder, CO 80309-0428

Transverse Building Section

0 1' 2' 4' 8'

A2.04

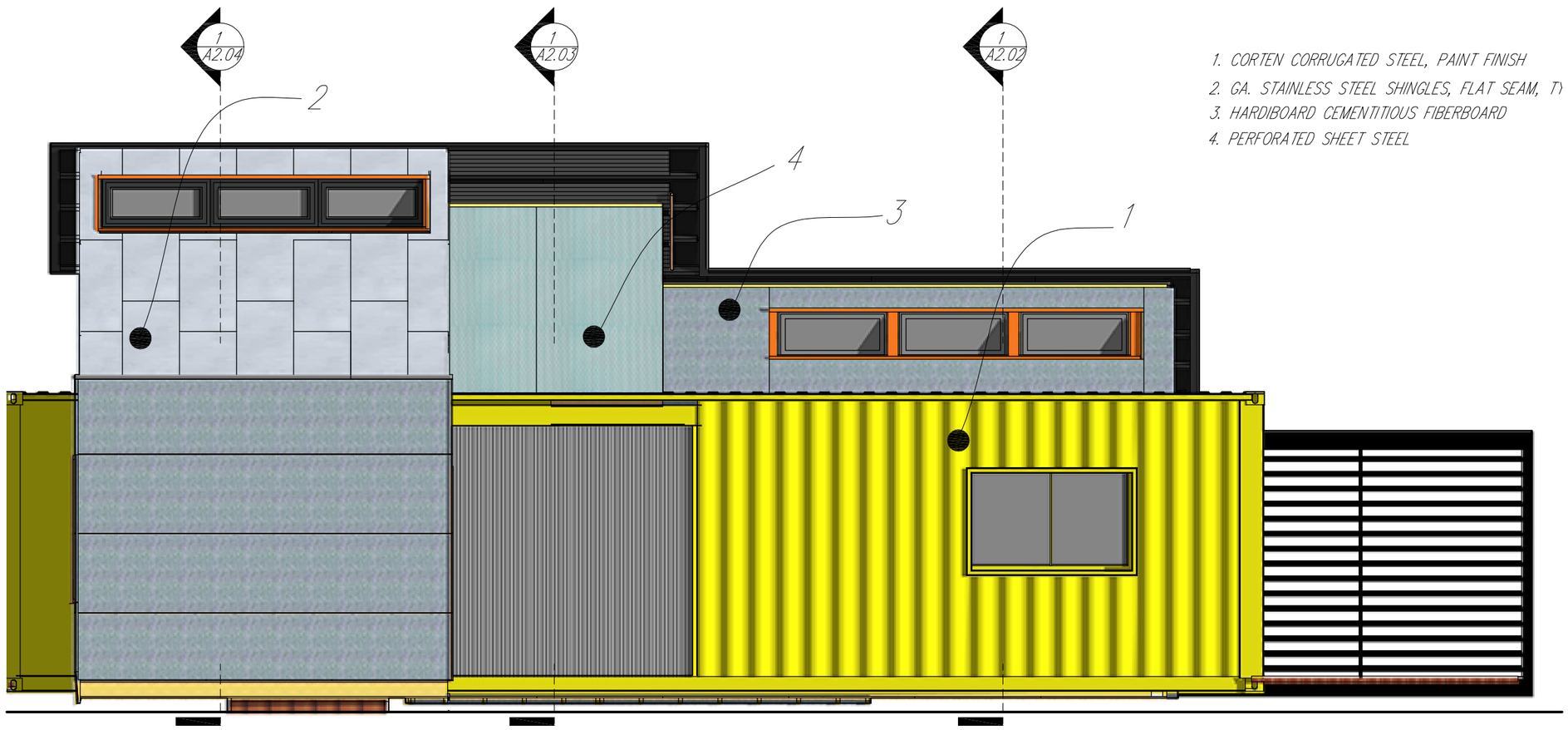

1. CORTEN CORRUGATED STEEL, PAINT FINISH
2. GA. STAINLESS STEEL SHINGLES, FLAT SEAM, T)
3. HARDIBOARD CEMENTITIOUS FIBERBOARD
4. PERFORATED SHEET STEEL

1 NORTH EXTERIOR ELEVATION

1/4" = 1'-0"

Drawn by	Date
S. Hauze	August 7, 2007
Revised	Date

2007 Solar Decathlon

University of Colorado at Boulder
Civil, Environmental, and Architectural Engineering
428 UCB, Room ECCE 441
Boulder, CO 80309-0428

North Exterior Elevation

0 1' 2' 4' 8'

A3.01

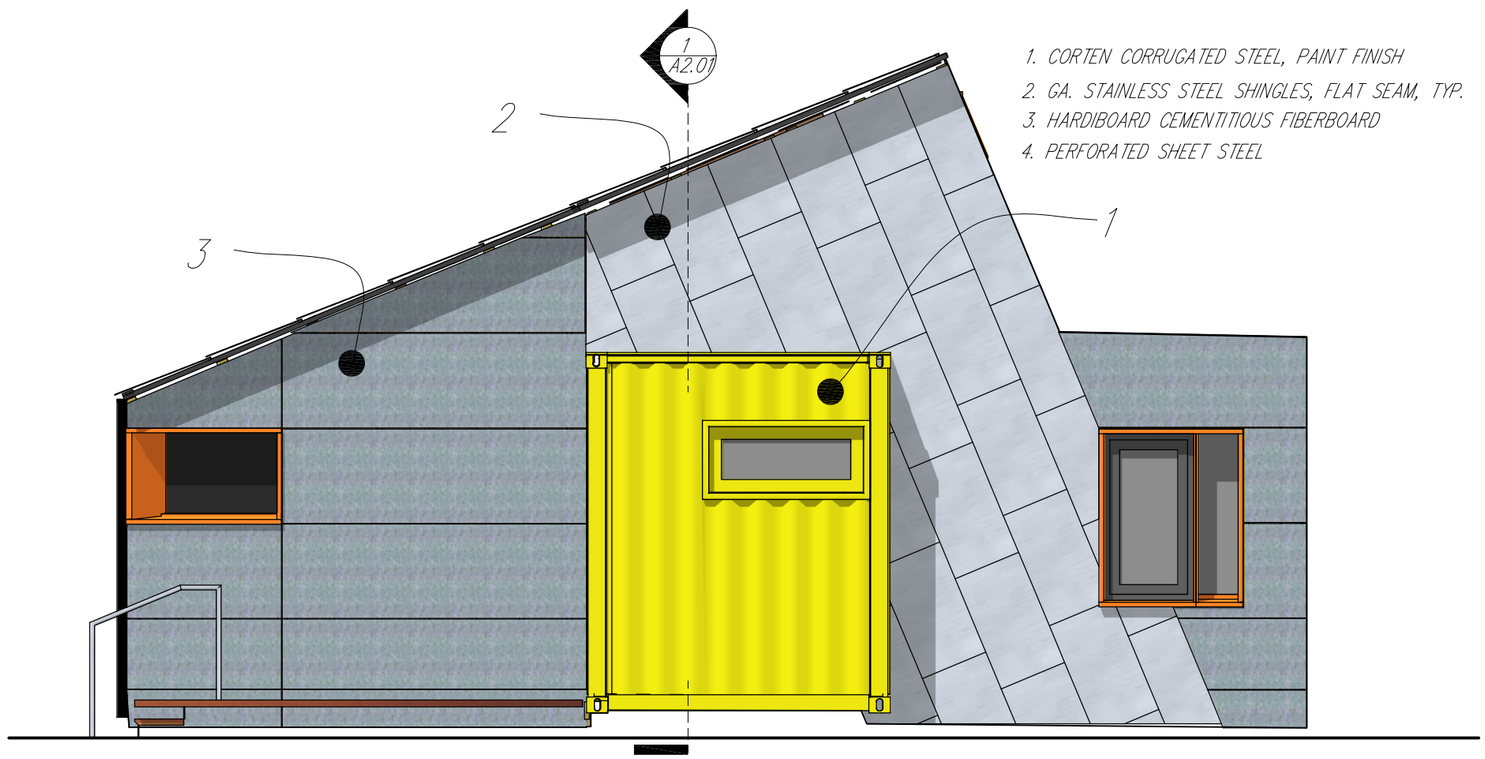

1. CORTEN CORRUGATED STEEL, PAINT FINISH
2. GA. STAINLESS STEEL SHINGLES, FLAT SEAM, TYP.
3. HARDIBOARD CEMENTITIOUS FIBERBOARD
4. PERFORATED SHEET STEEL

1 EAST EXTERIOR ELEVATION

1/4" = 1'-0"

Drawn by	Date
S. Hauze	August 7, 2007
Revised	Date

2007 Solar Decathlon

East Exterior Elevation

0 1' 2' 4' 8'

University of Colorado at Boulder
Civil, Environmental, and Architectural Engineering
428 UCB, Room ECCE 441
Boulder, CO 80309-0428

A3.02

1. CORTEN CORRUGATED STEEL, PAINT FINISH
2. GA. STAINLESS STEEL SHINGLES, FLAT SEAM, TYP.
3. HARDIBOARD CEMENTITIOUS FIBERBOARD
4. PERFORATED SHEET STEEL

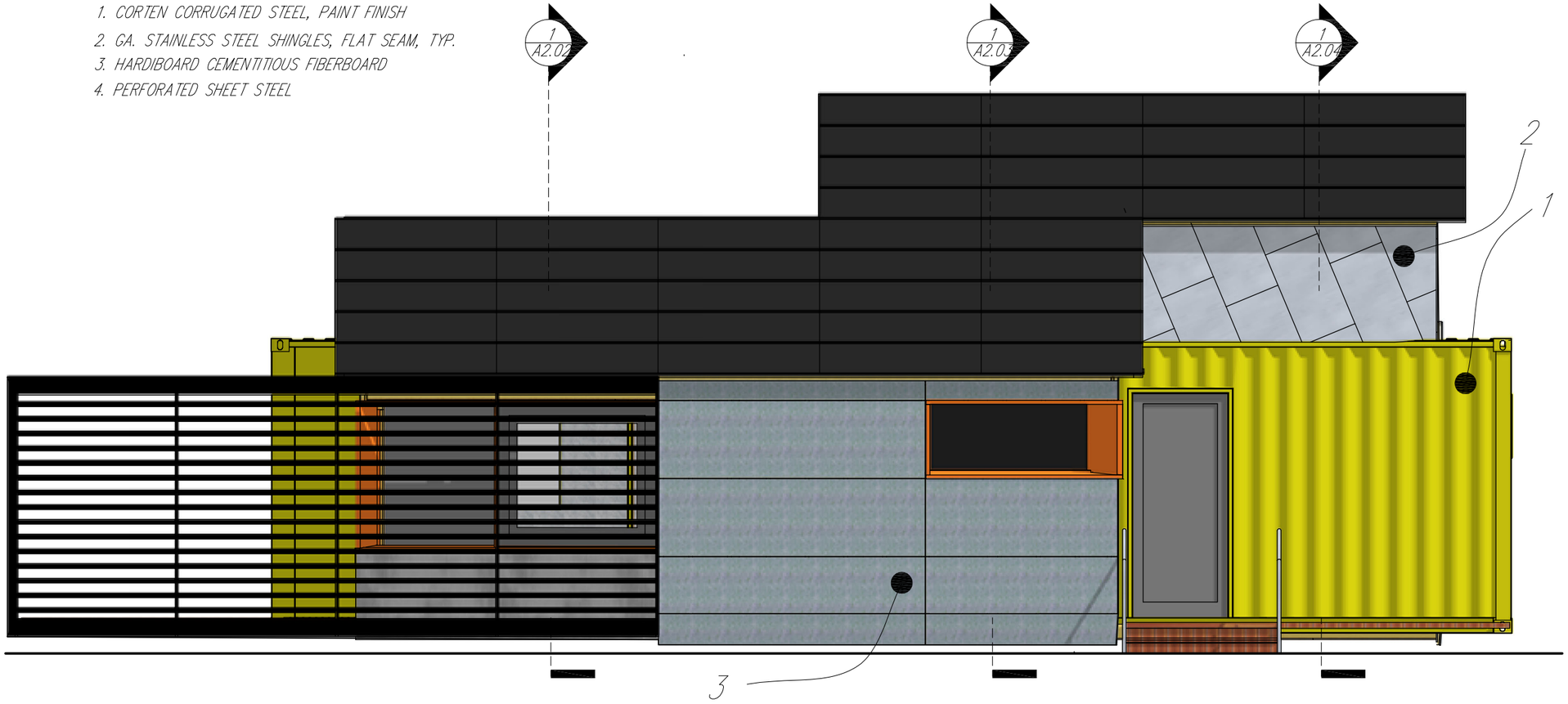

1 SOUTH EXTERIOR ELEVATION

1/4" = 1'-0"

Drawn by	Date
S. Hauze	August 7, 2007
Revised	Date

2007 Solar Decathlon

University of Colorado at Boulder
Civil, Environmental, and Architectural Engineering
428 UCB, Room ECCE 441
Boulder, CO 80309-0428

South Exterior Elevation

0 1' 2' 4' 8'

A3.03

1. CORTEN CORRUGATED STEEL, PAINT FINISH
2. GA. STAINLESS STEEL SHINGLES, FLAT SEAM, TYP.
3. HARDIBOARD CEMENTITIOUS FIBERBOARD
4. PERFORATED SHEET STEEL

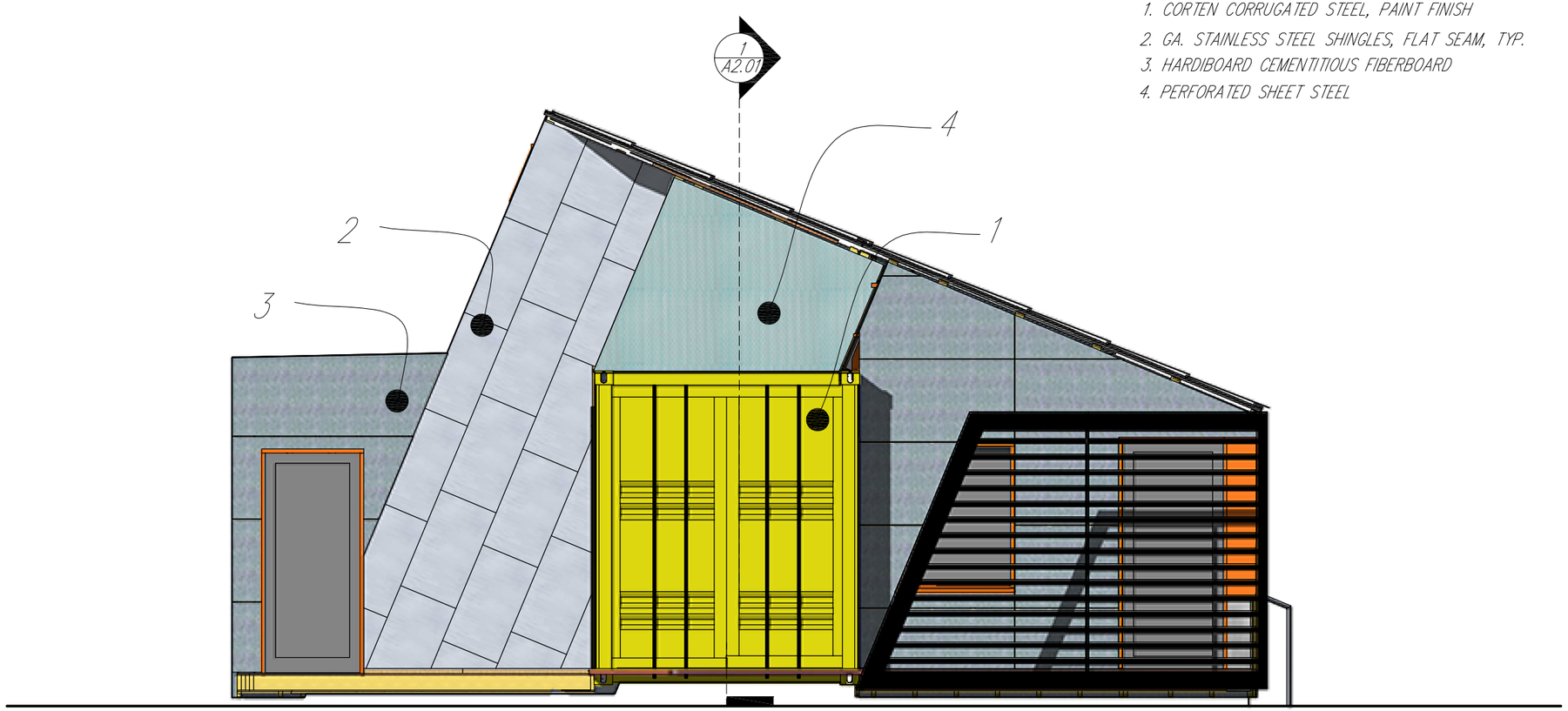

1 WEST EXTERIOR ELEVATION

1/4" = 1'-0"

Drawn by	Date
S. Hauze	August 7, 2007
Revised	Date

2007 Solar Decathlon

University of Colorado at Boulder
Civil, Environmental, and Architectural Engineering
428 UCB, Room ECCE 441
Boulder, CO 80309-0428

West Exterior Elevation

0 1' 2' 4' 8'

A3.04

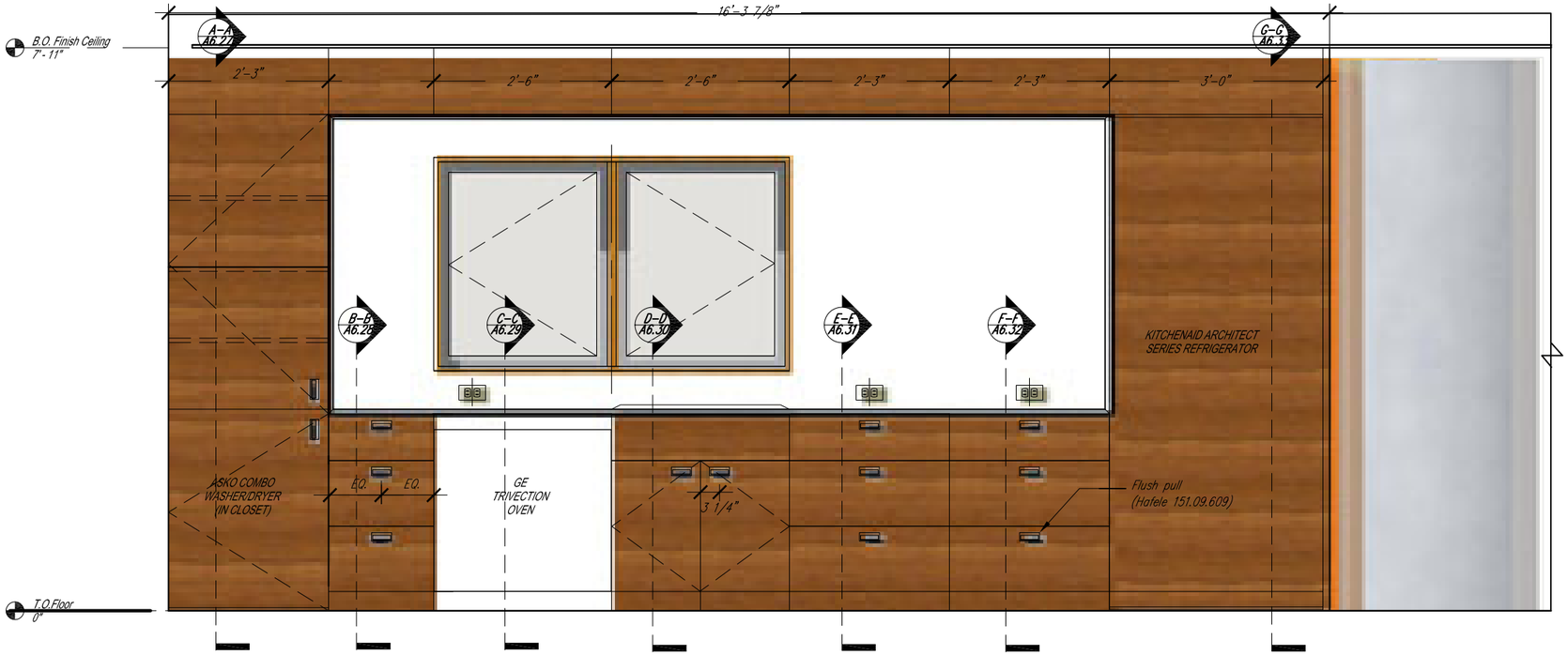

1 KITCHEN NORTH INTERIOR ELEVATION

1/2" = 1'-0"

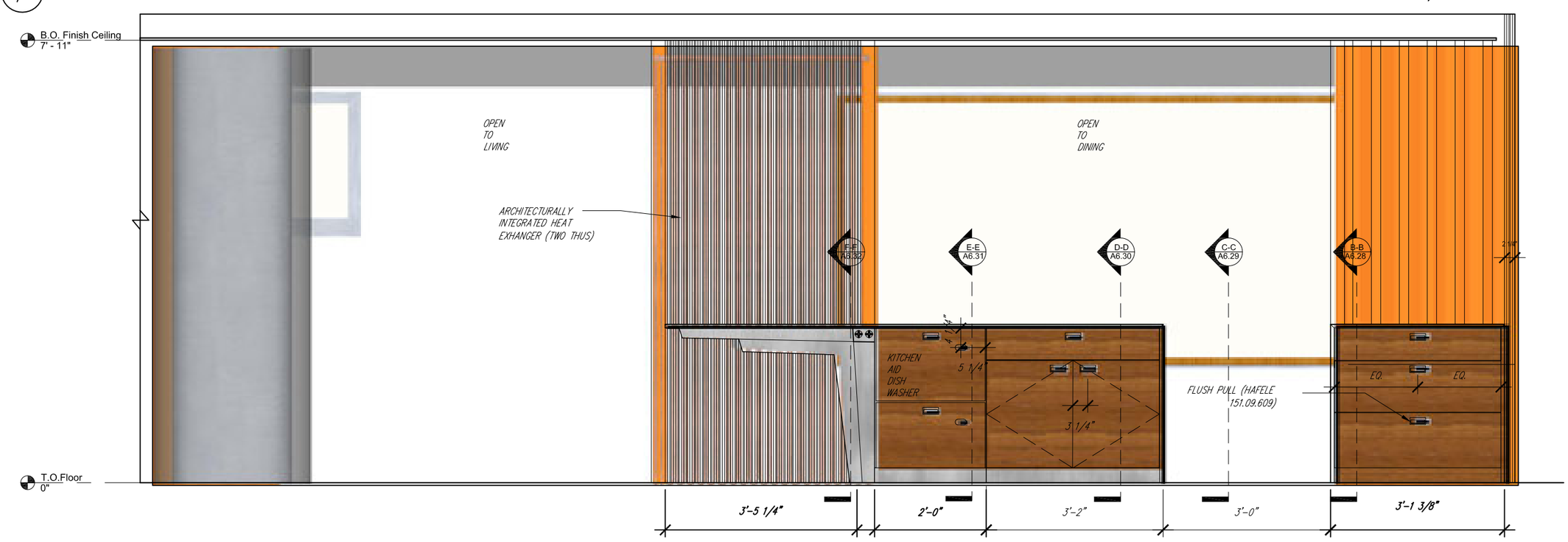

2 KITCHEN SOUTH INTERIOR ELEVATION

1/2" = 1'-0"

Drawn by	S. Hauze
Date	August 7, 2007
Revised	Date

2007 Solar Decathlon

University of Colorado at Boulder

Civil, Environmental, and Architectural Engineering
428 UCB, Room ECCE 441
Boulder, CO 80309-0428

Kitchen Norh/South Int. Elevations

0 6" 1' 2' 4'

A4.01

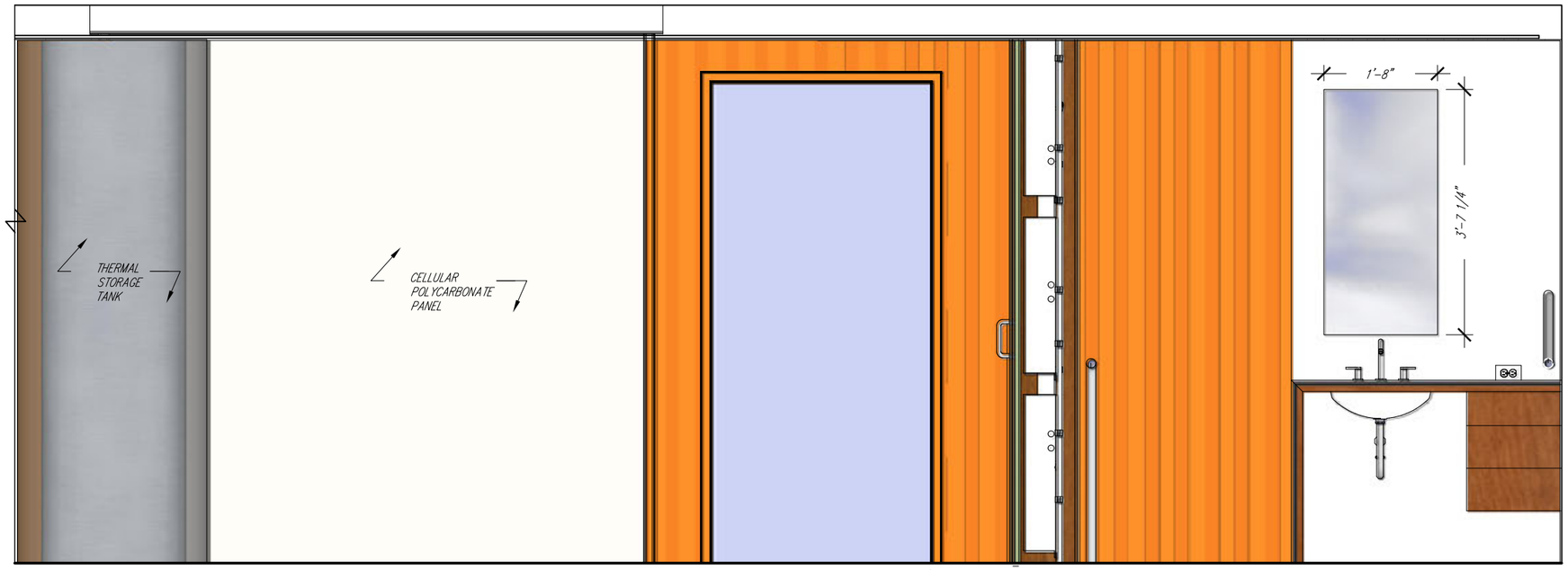

1 MECHANICAL/BATH NORTH INTERIOR ELEVATION

1/2" = 1'-0"

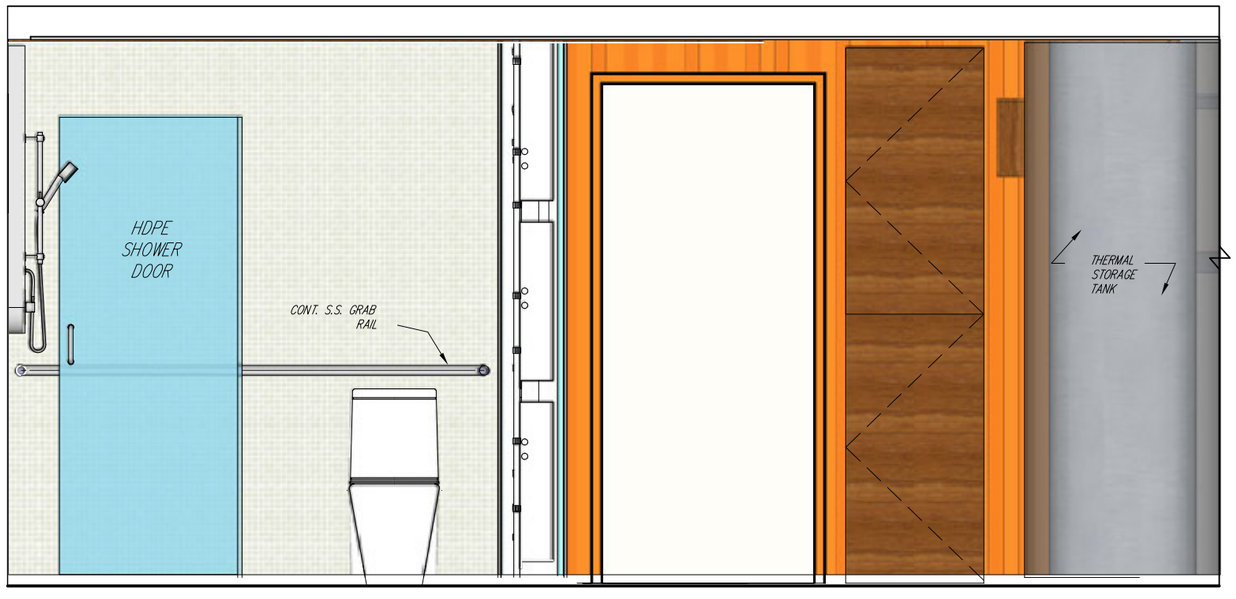

2 MECHANICAL/BATH SOUTH INTERIOR ELEVATION

1/2" = 1'-0"

Drawn by	Date
S.Hauze	August 7, 2007
Revised	Date

Mech./Bath North/South Int. Elevations 2007 Solar Decathlon

University of Colorado at Boulder

Civil, Environmental, and Architectural Engineering
428 UCB, Room ECCE 441
Boulder, CO 80309-0428

0 1' 2' 4' 8'

A4.02

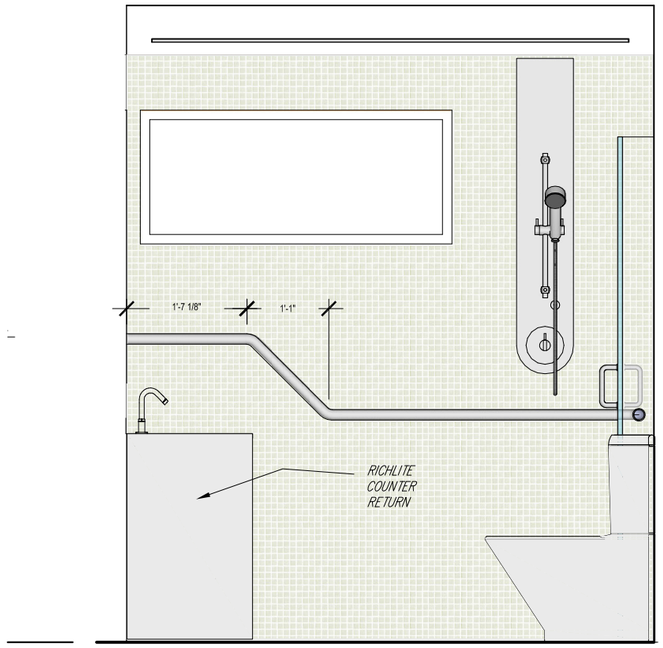

2 BATH EAST INTERIOR ELEVATION 1/2" = 1'-0"

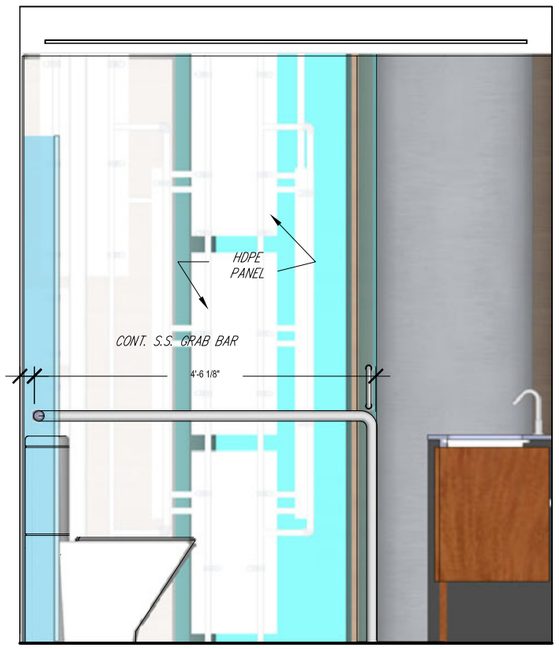

1 BATH WEST INTERIOR ELEVATION 1/2" = 1'-0"

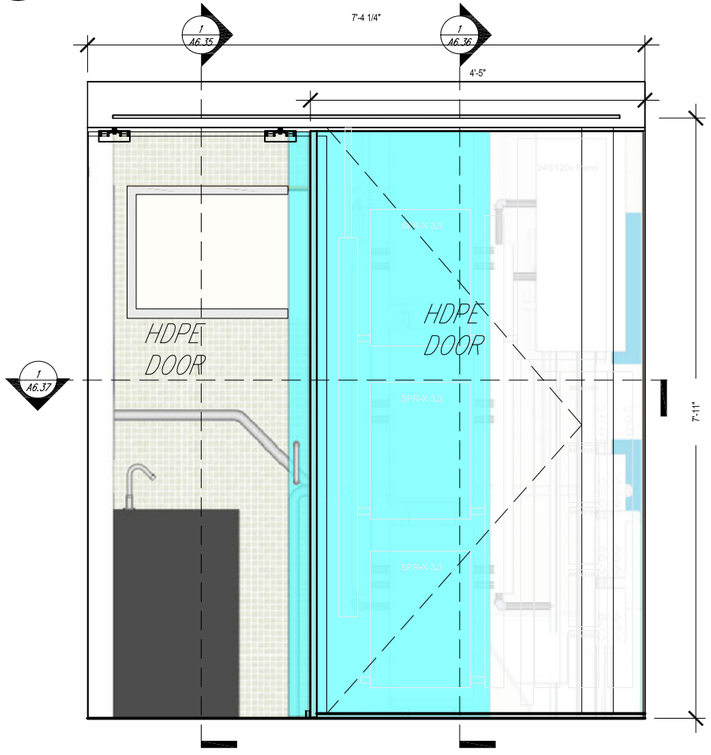

3 MECH. SPACE EAST INTERIOR ELEVATION 1/2" = 1'-0"

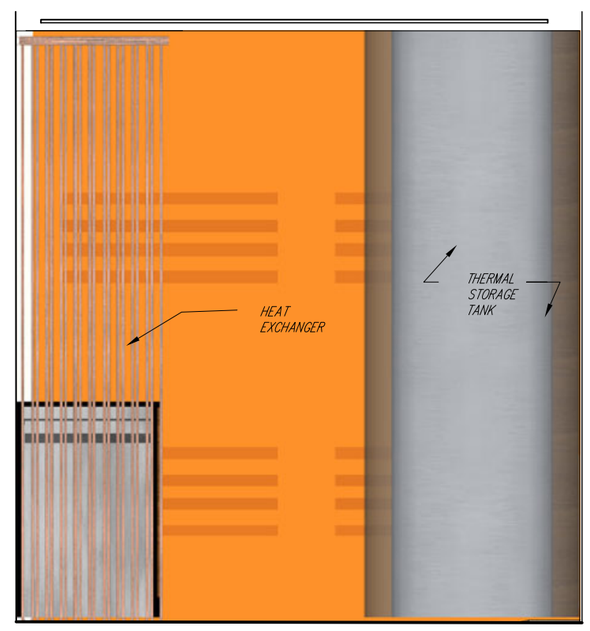

4 MECH. SPACE WEST INTERIOR ELEVATION 1/2" = 1'-0"

Drawn by	Date
S.Hauze	August 7, 2007
Revised	Date

Mech./Bath East/West Int. Elevations 2007 Solar Decathlon

University of Colorado at Boulder
Civil, Environmental, and Architectural Engineering
428 UCB, Room ECOE 441
Boulder, CO 80309-0428

0 1' 2' 4' 8'

A4.03

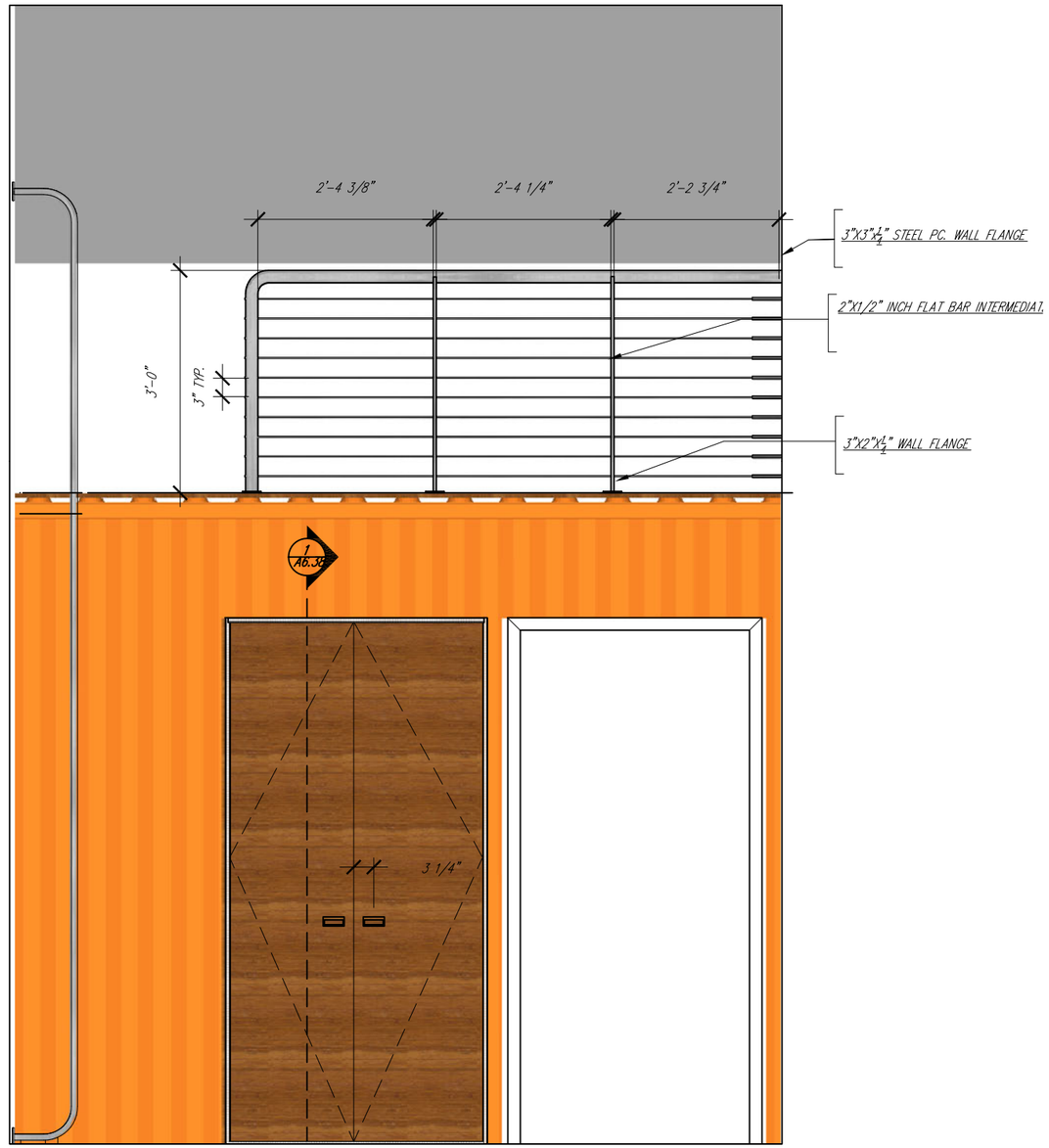

2 BEDROOM SOUTH INTERIOR ELEVATION

1/2" = 1'-0"

Drawn by	Date
S.Hauze	August 7, 2007
Revised	Date

Bedroom North/South Int. Elevations

2007 Solar Decathlon

University of Colorado at Boulder

Civil, Environmental, and Architectural Engineering
428 UCB, Room ECCE 441
Boulder, CO 80309-0428

0 1' 2' 4' 8'

A4.04

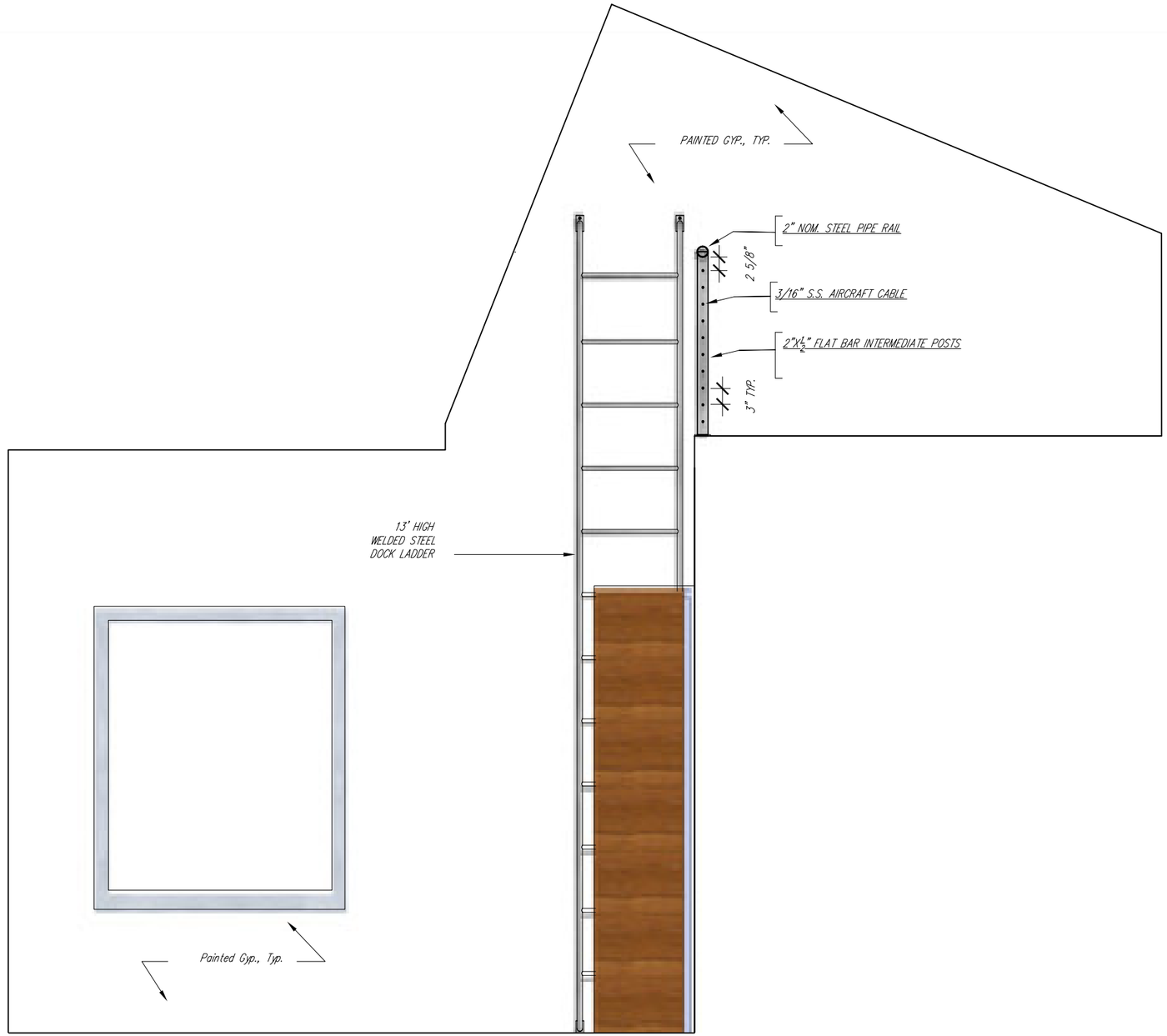

1 BEDROOM/LOFT EAST INTERIOR ELEVATION
1/2" = 1'-0"

Drawn by	Date
S.Hauze	August 7, 2007
Revised	Date

2007 Solar Decathlon

University of Colorado at Boulder
Civil, Environmental, and Architectural Engineering
428 UCB, Room ECCE 441
Boulder, CO 80309-0428

Bedroom East Int. Elevation

0 1' 2' 4' 8'

A4.05

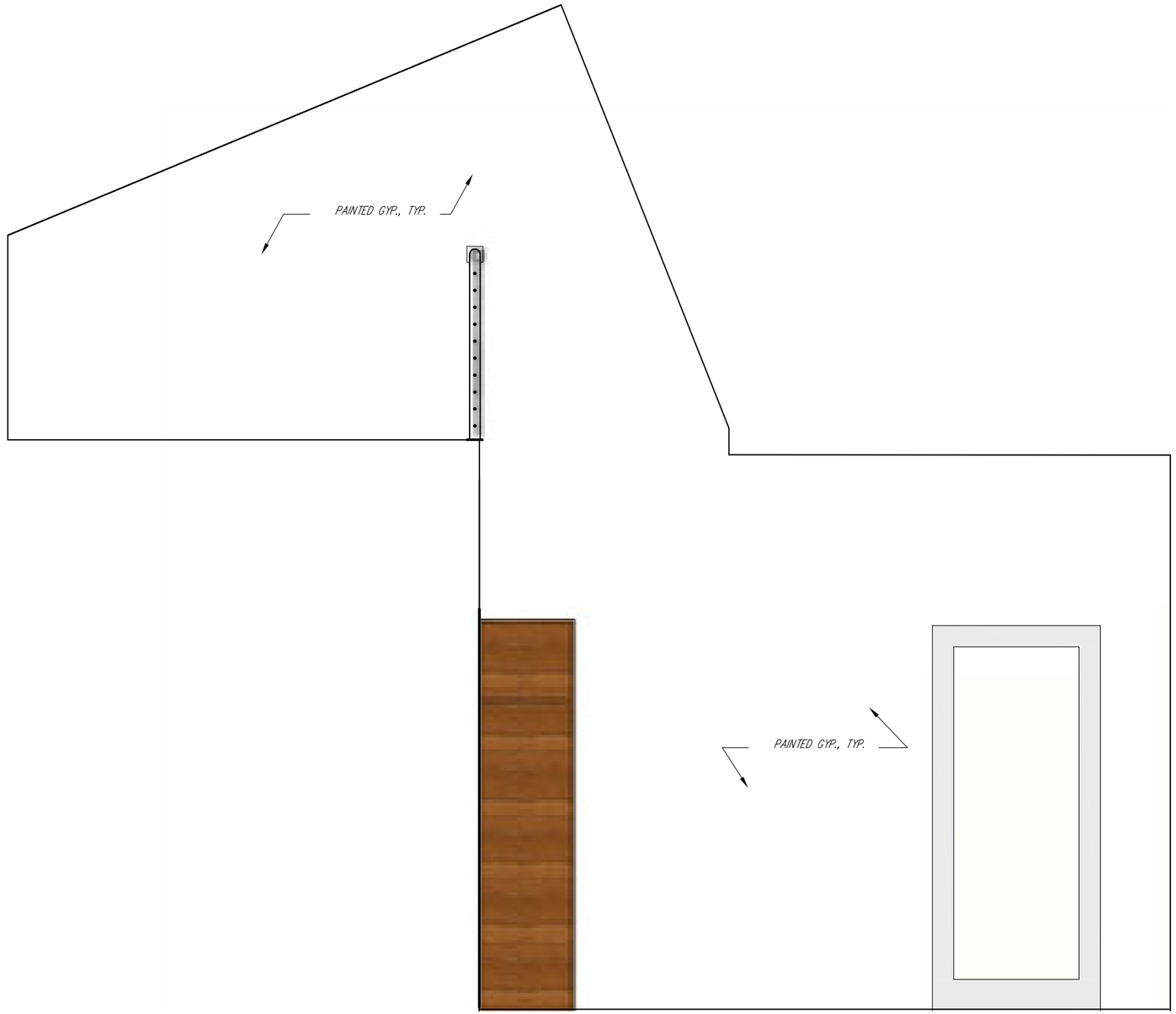

1 BEDROOM/LOFT WEST INTERIOR ELEVATION
1/2" = 1'-0"

Drawn by	Date
S.Hauze	August 7, 2007
Revised	Date

2007 Solar Decathlon

University of Colorado at Boulder
Civil, Environmental, and Architectural Engineering
428 UCB, Room ECCE 441
Boulder, CO 80309-0428

Bedroom West Int. Elevation

0 1' 2' 4' 8'

A4.06

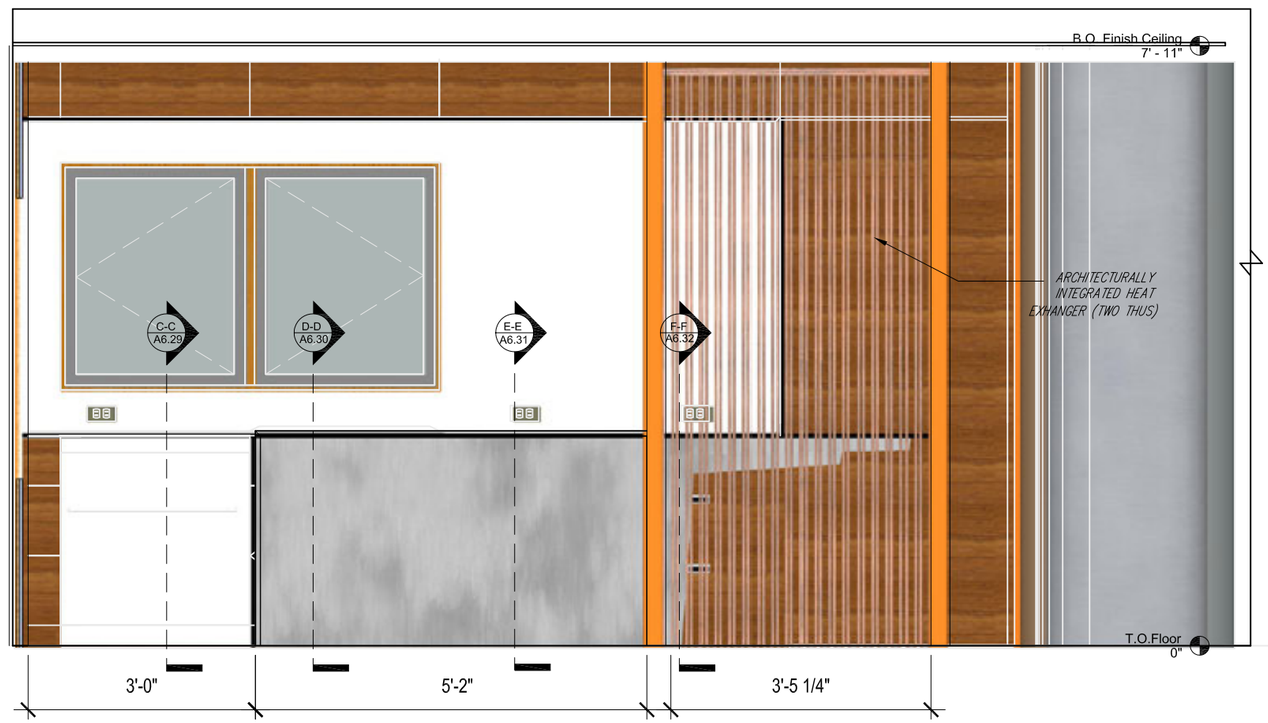

1 LIVING NORTH INTERIOR ELEVATION
1/2" = 1'-0"

Drawn by	Date
S.Hauze	August 7, 2007
Revised	Date

2007 Solar Decathlon

University of Colorado at Boulder
Civil, Environmental, and Architectural Engineering
428 UCB, Room ECCE 441
Boulder, CO 80309-0428

Living North Int. Elevation

0 1' 2' 4' 8'

A4.07

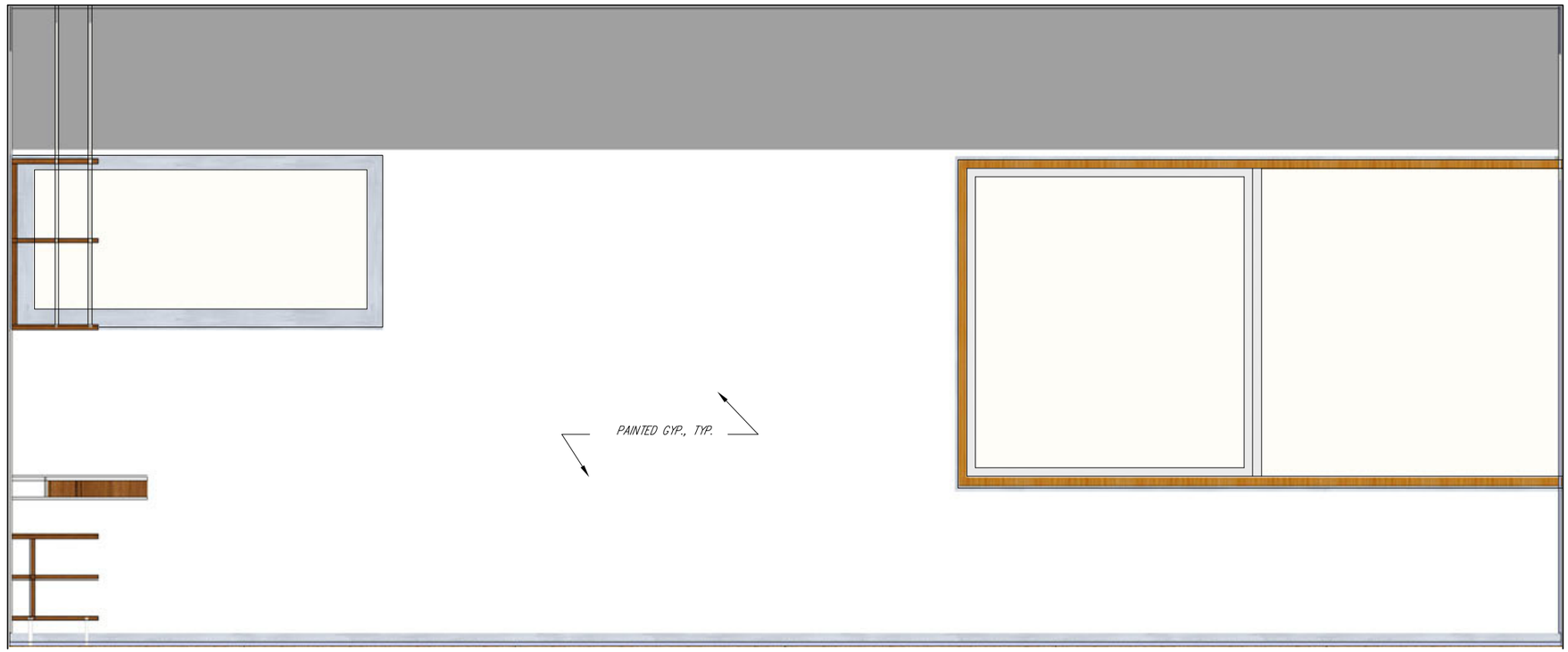

1 LIVING SOUTH INTERIOR ELEVATION
1/2" = 1'-0"

Drawn by	Date
S.Hauze	August 7, 2007
Revised	Date

2007 Solar Decathlon

University of Colorado at Boulder
Civil, Environmental, and Architectural Engineering
428 UCB, Room ECCE 441
Boulder, CO 80309-0428

Living South Int. Elevation

0 1' 2' 4' 8'

A4.08

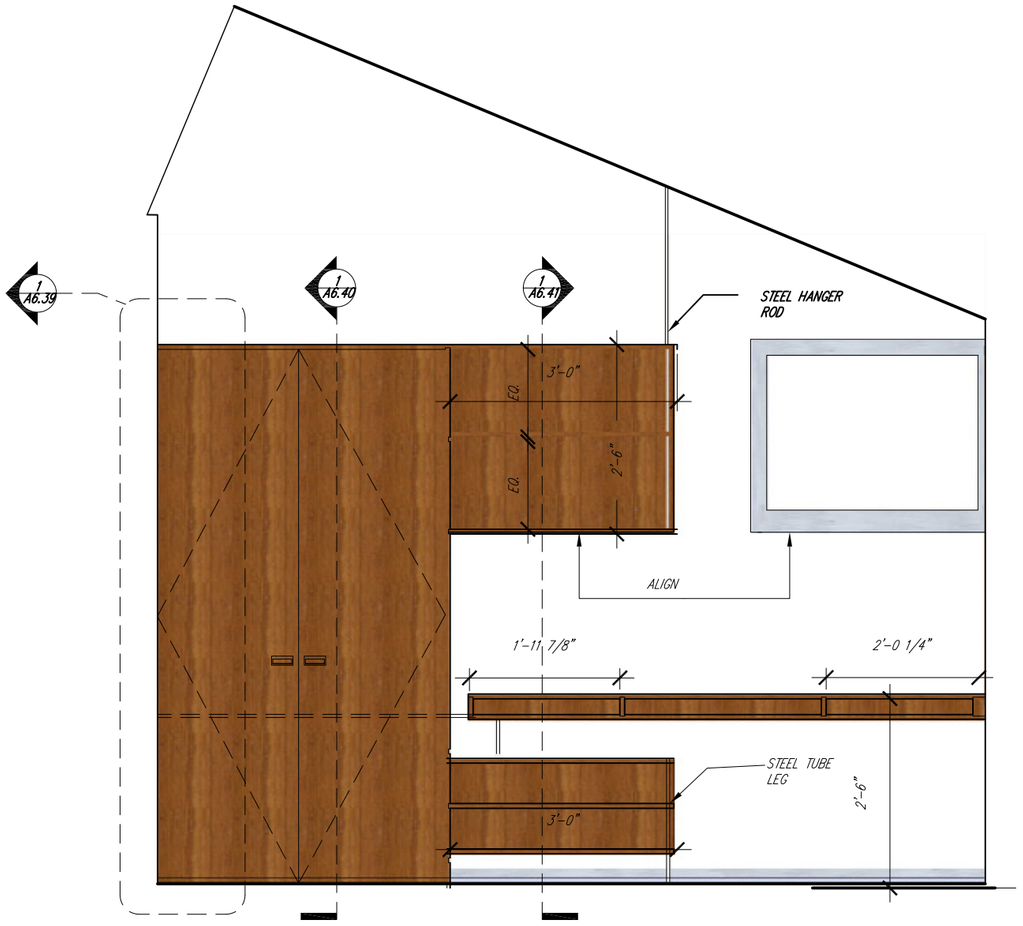

1 LIVING EAST INTERIOR ELEVATION
1/2" = 1'-0"

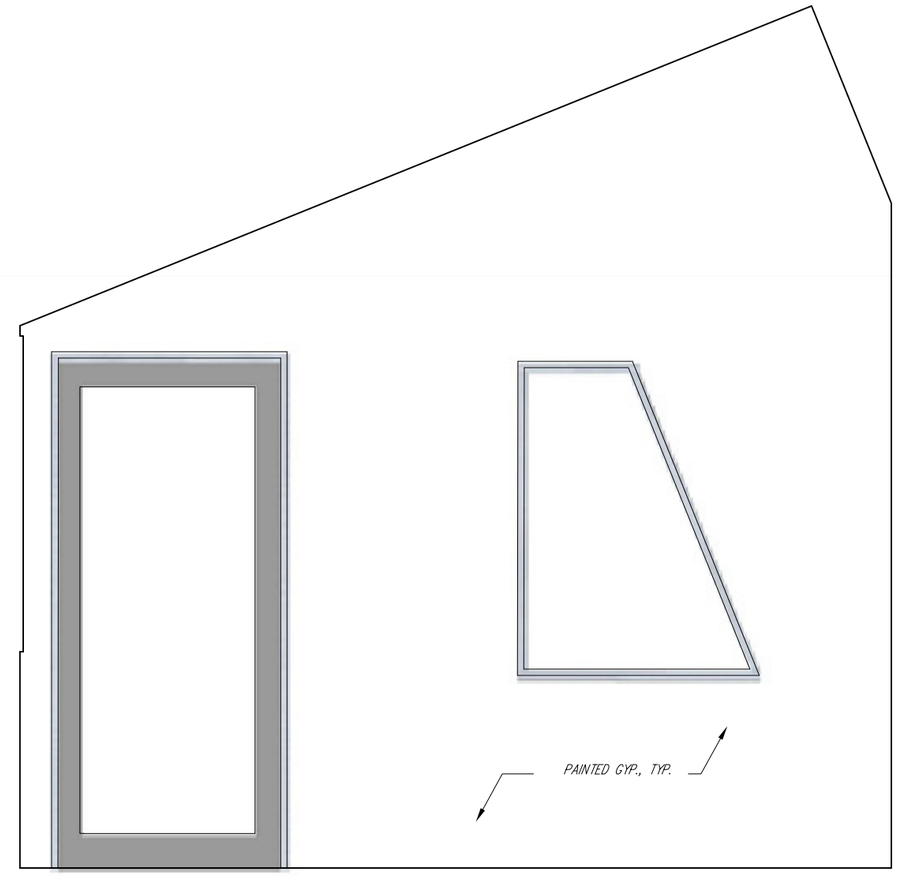

2 LIVING WEST INTERIOR ELEVATION
1/2" = 1'-0"

Drawn by	Date
S.Hauze	August 7, 2007
Revised	Date

2007 Solar Decathlon

University of Colorado at Boulder
Civil, Environmental, and Architectural Engineering
428 UCB, Room ECCE 441
Boulder, CO 80309-0428

Living East/West Int. Elevation

0 1' 2' 4' 8'

A4.09

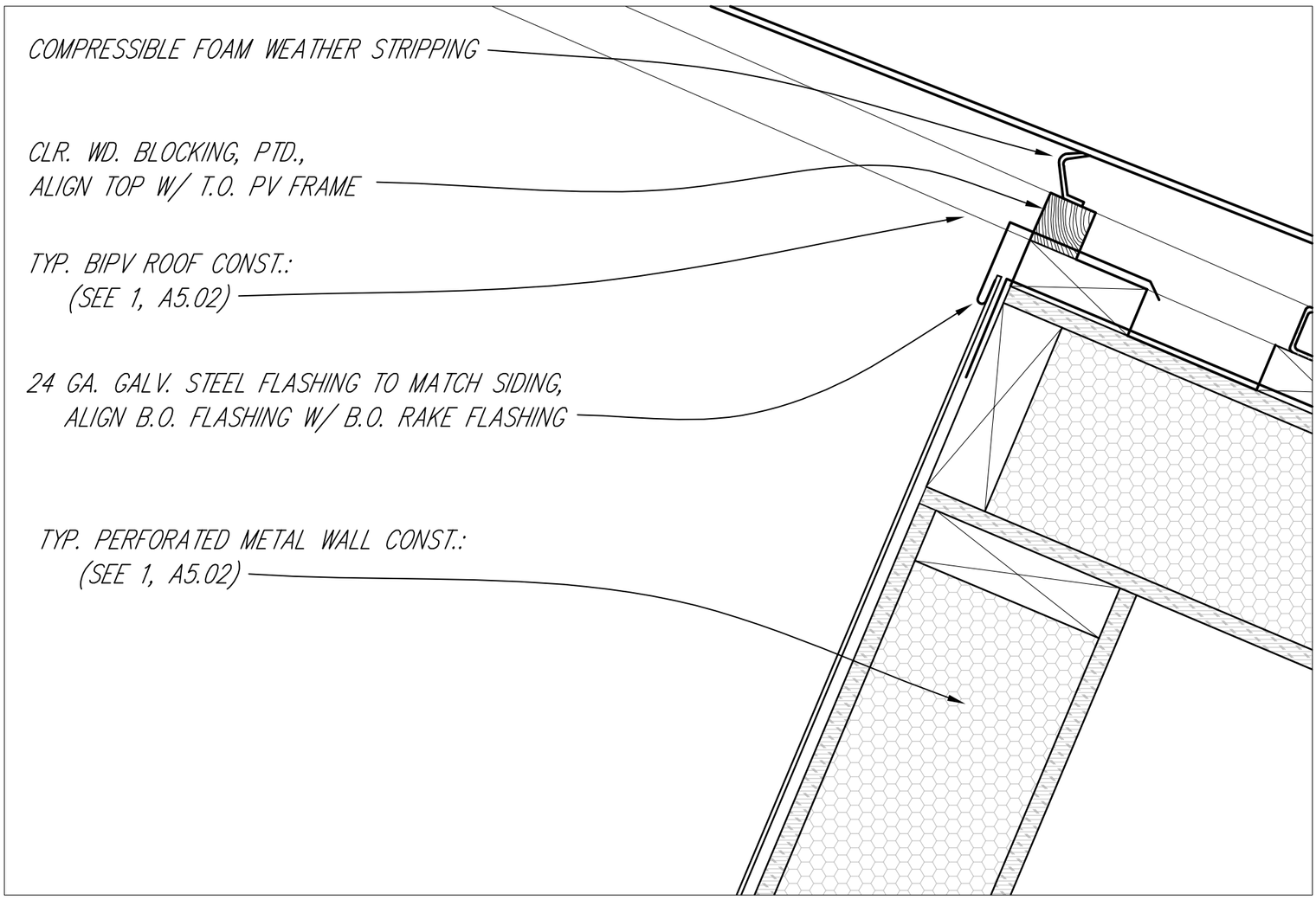

1 HIGH EAVE SECTION: PERF. METAL/METAL SHINGLE SIP WALL TO BIPV ROOF

3" – 1'-0"

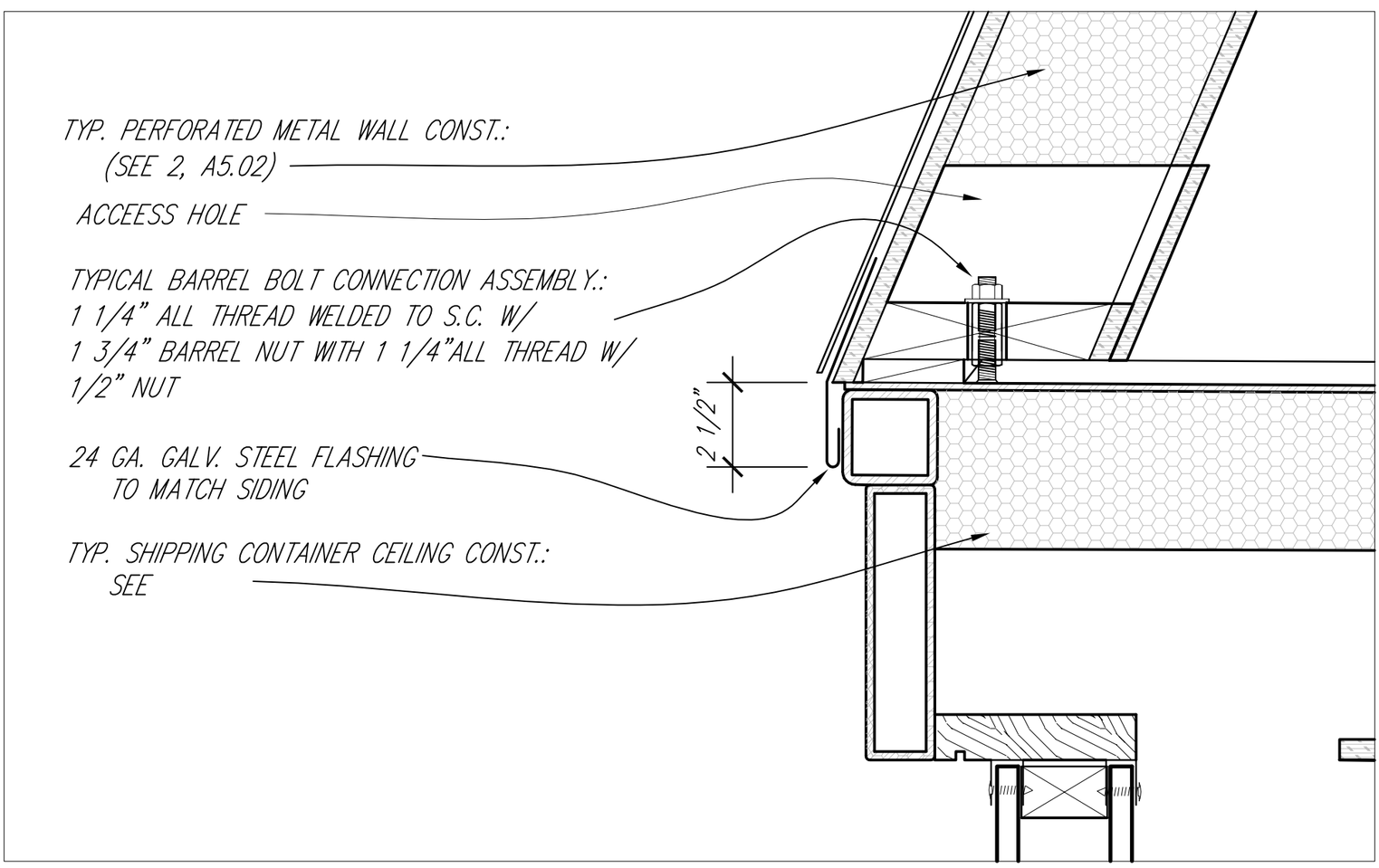

2 CONNECTION: PERFORATED METAL SIP WALL TO SHIPPING CONTAINER ROOF

3" – 1'-0"

A5.01

Roof Details

0 1.5" 3" 6" 1'

2007 Solar Decathlon

University of Colorado at Boulder

Civil, Environmental, and Architectural Engineering
428 UCB, Room ECCE 441
Boulder, CO 80309-0428

Drawn by	Date
NJS	August 7, 2007
Revised	Date

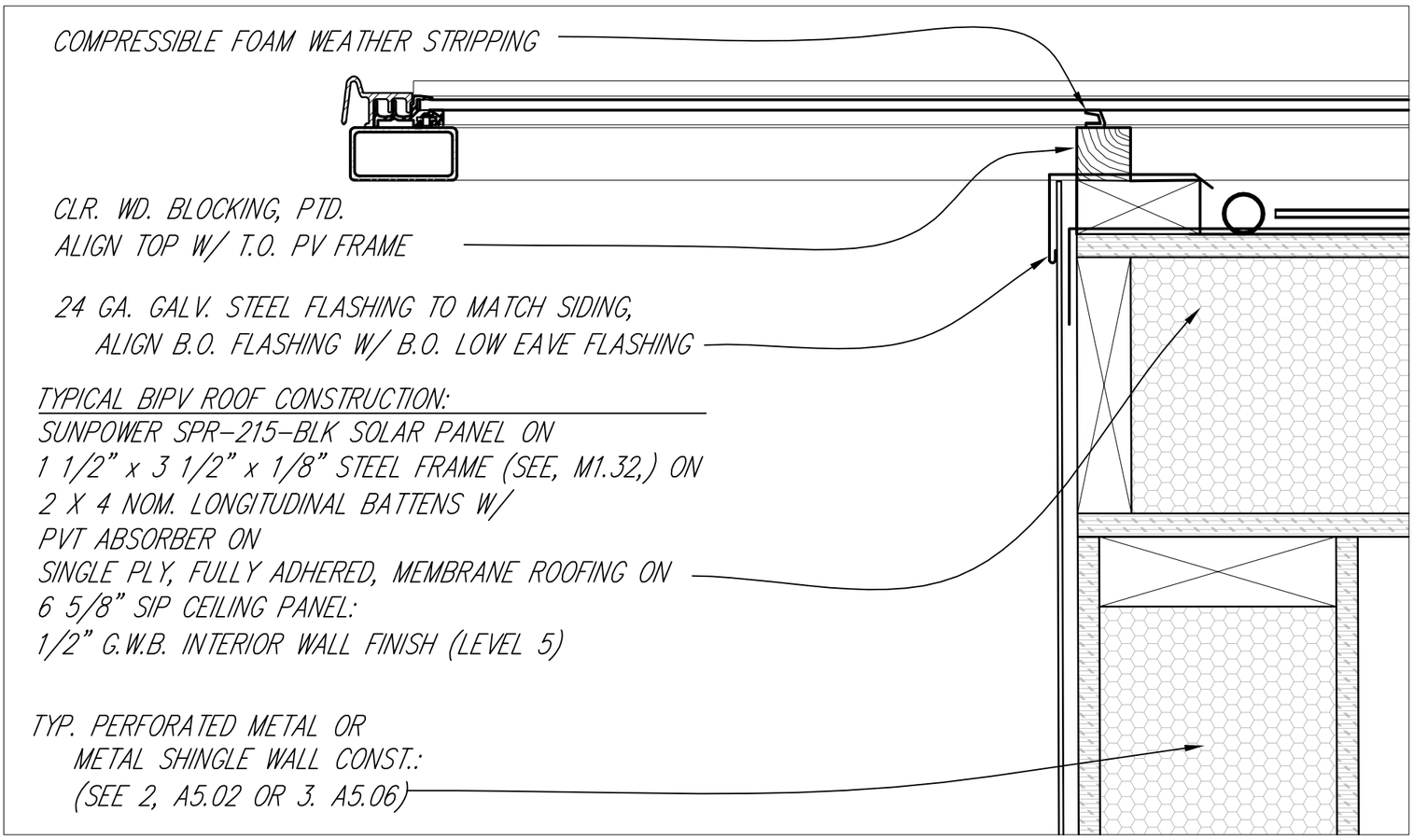

1 RAKE CONNECTION: PERFORATED METAL OR METAL SHINGLE SIP WALL TO BIPV ROOF

3" – 1'-0"

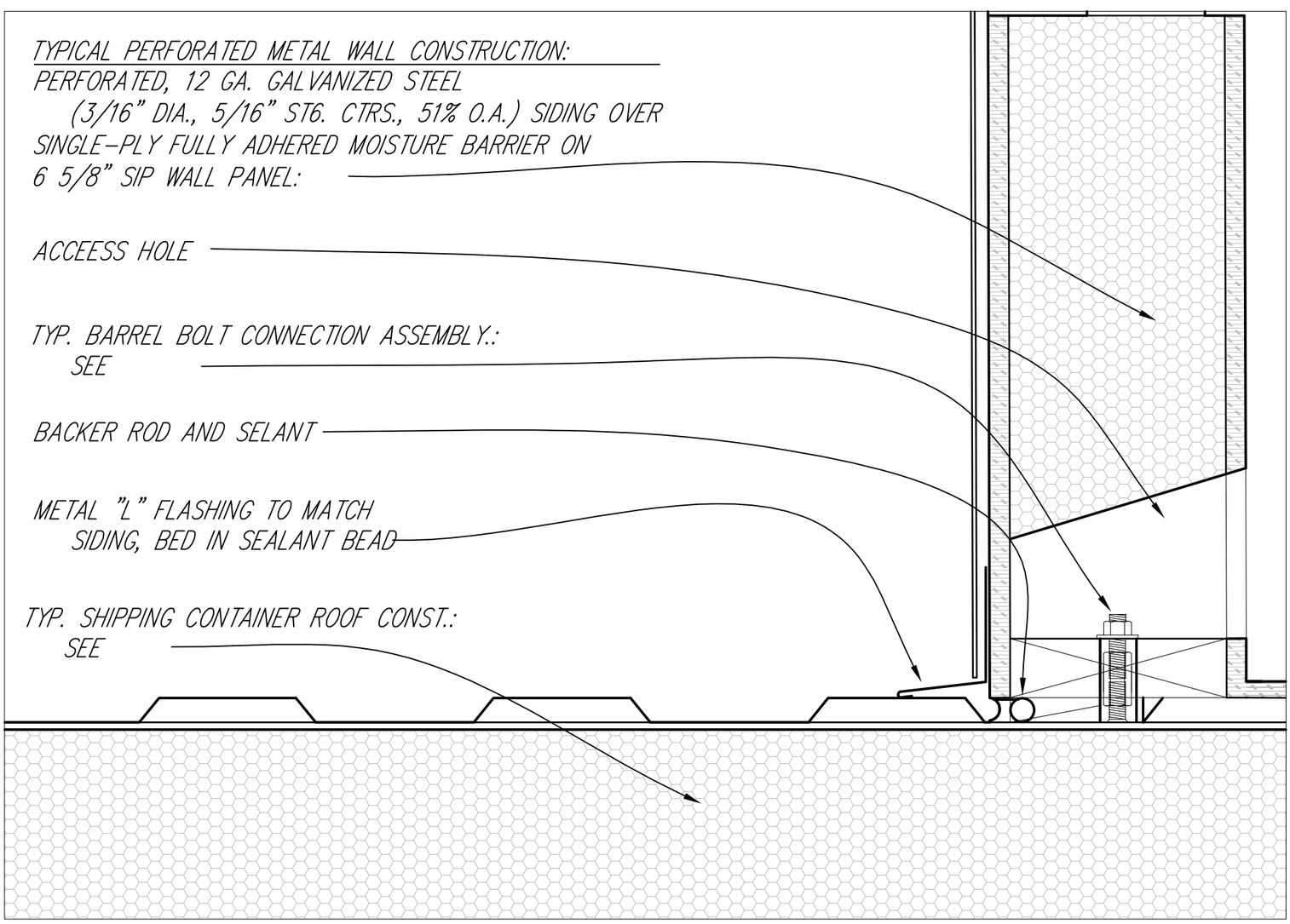

2 SIDEWALL CONNECTION: PERF. METAL/METAL SHINGLE SIP WALL TO S.C. ROOF

3" – 1'-0"

A5.02

ROOF DETAILS

0 1.5" 3" 6" 1'

2007 Solar Decathlon

University of Colorado at Boulder

Civil, Environmental, and Architectural Engineering
428 UCB, Room ECCE 441
Boulder, CO 80309-0428

Drawn by	Date
NJS	August 7, 2007
Revised	Date

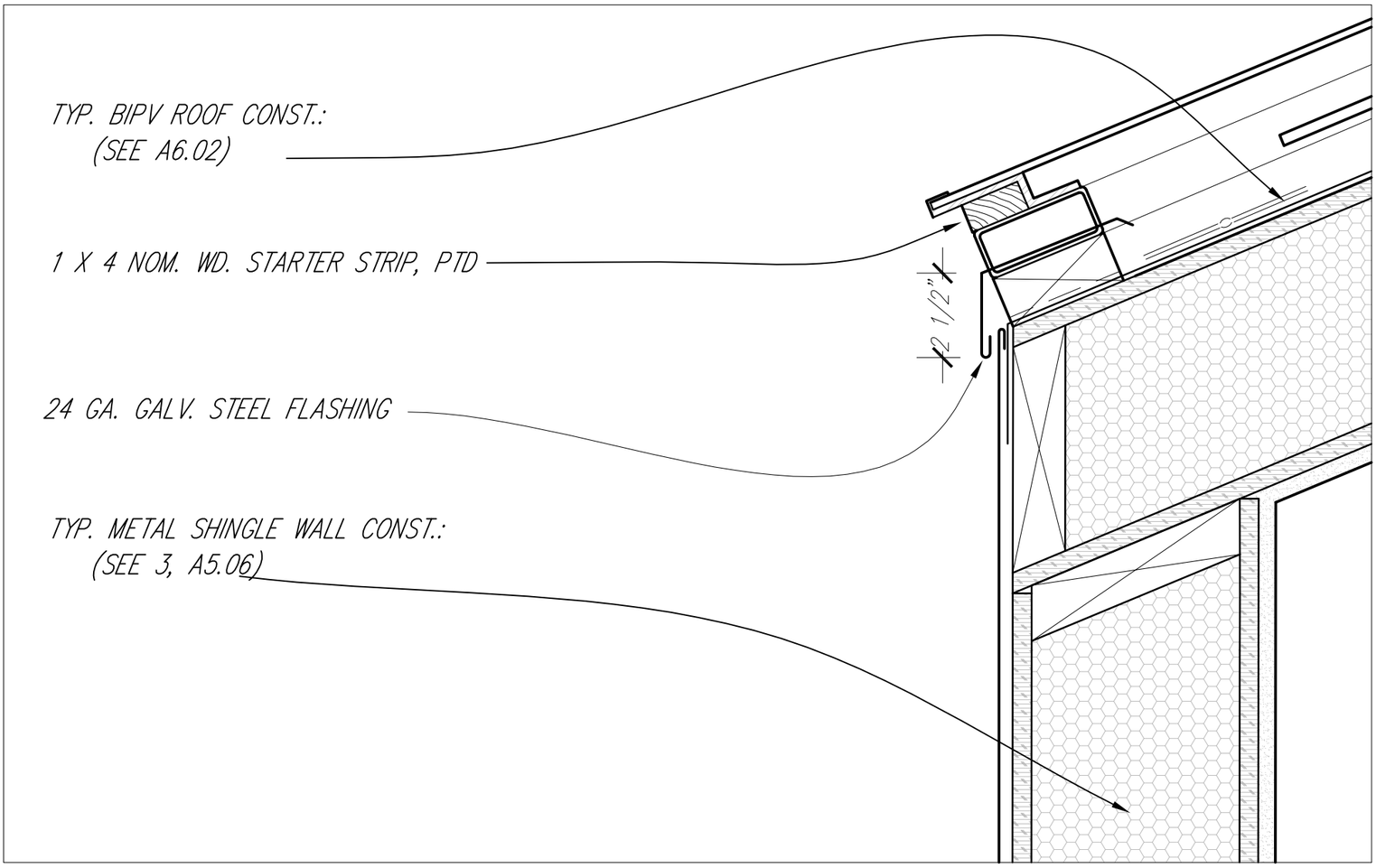

1 LOW EAVE SECTION: METAL SHINGLE SIP WALL TO BIPV ROOF

3" – 1'-0"

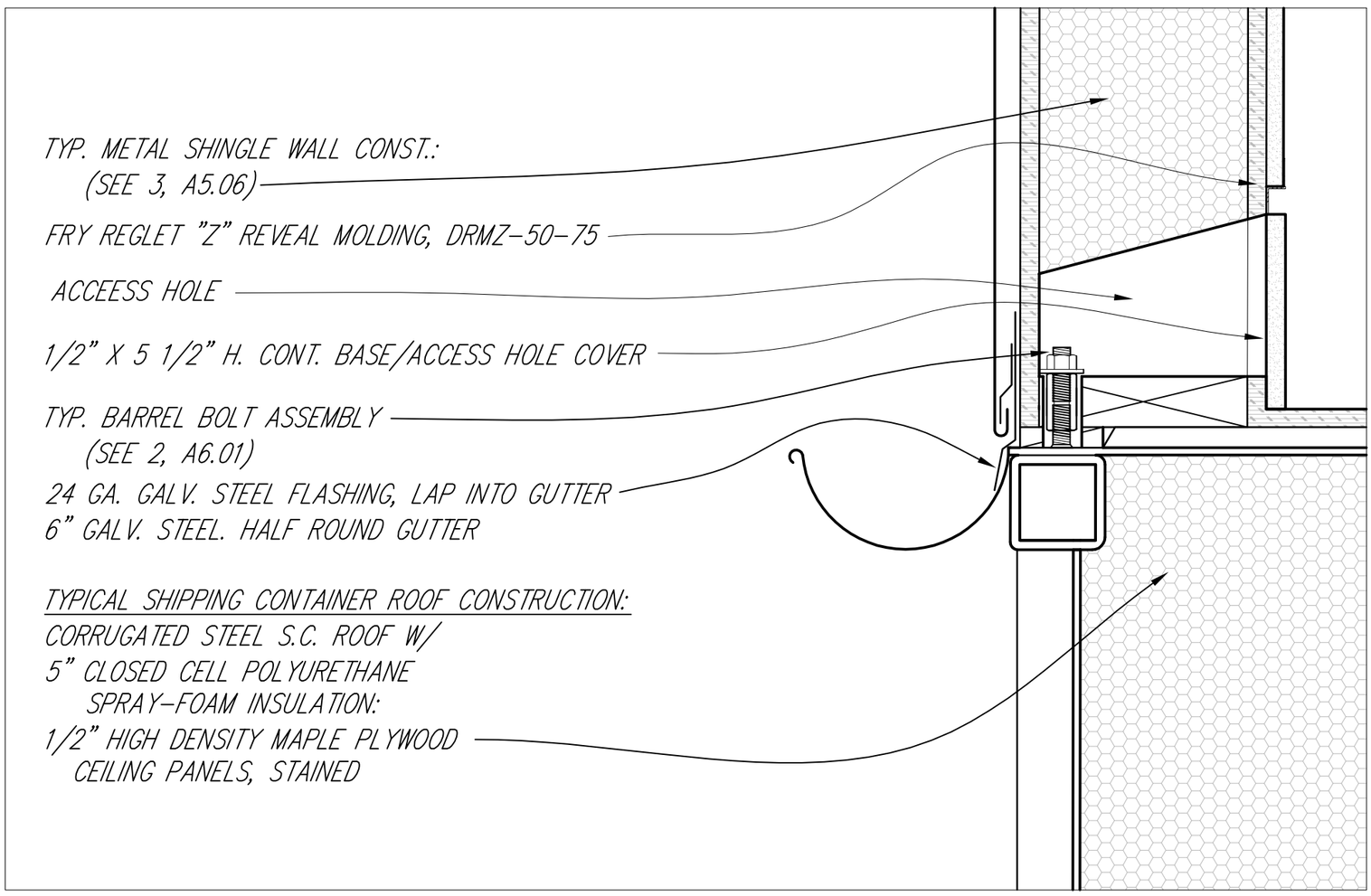

2 SIDEWALL CONNECTION: METAL SHINGLE SIP WALL TO SHIPPING CONTAINER ROOF

3" – 1'-0"

A5.03

ROOF DETAILS

0 1.5" 3" 6" 1'

2007 Solar Decathlon

University of Colorado at Boulder

Civil, Environmental, and Architectural Engineering
428 UCB, Room ECCE 441
Boulder, CO 80309-0428

Drawn by	Date
NJS	August 7, 2007
Revised	Date

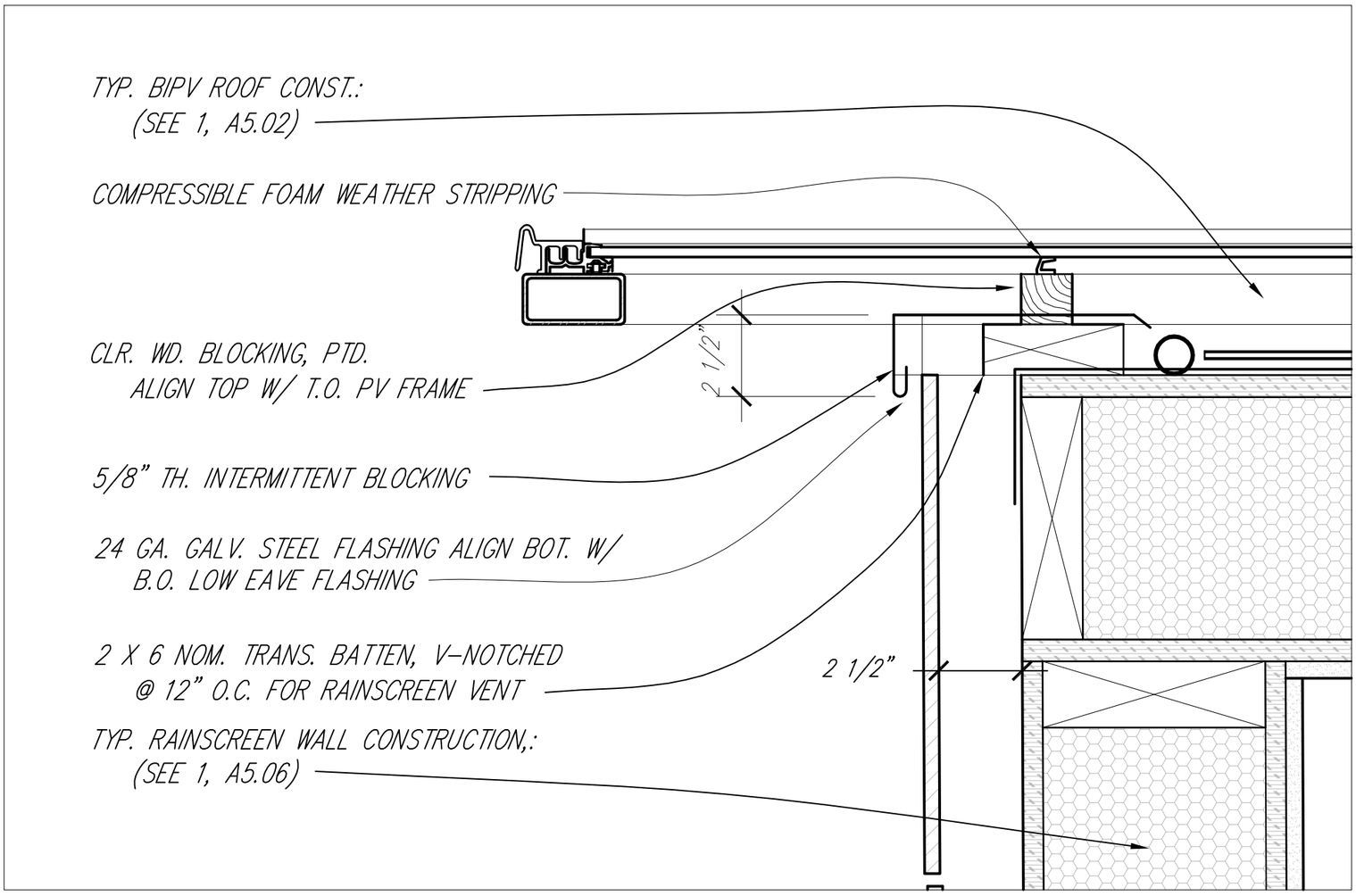

1 RAKE CONNECTION: RAINSCREEN SIP WALL TO BIPV ROOF

3" – 1'-0"

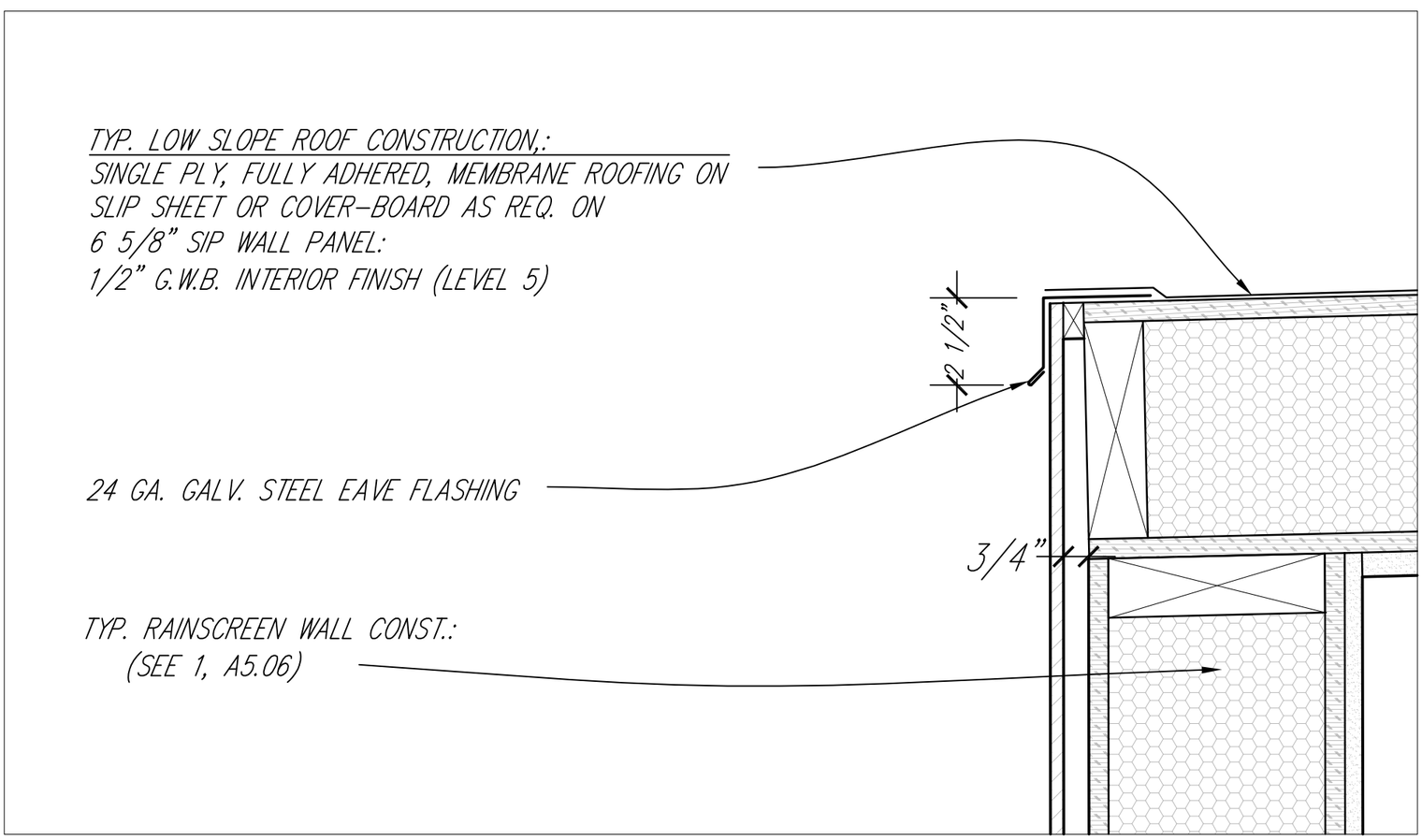

2 EAVE/RAKE: RAINSCREEN SIP WALL TO LOW SLOPE SIP ROOF

3" – 1'-0"

A5.04

Roof Details

0 1.5" 3" 6" 1'

2007 Solar Decathlon

University of Colorado at Boulder

Civil, Environmental, and Architectural Engineering
428 UCB, Room ECCE 441
Boulder, CO 80309-0428

Drawn by	Date
NJS	August 7, 2007
Revised	Date

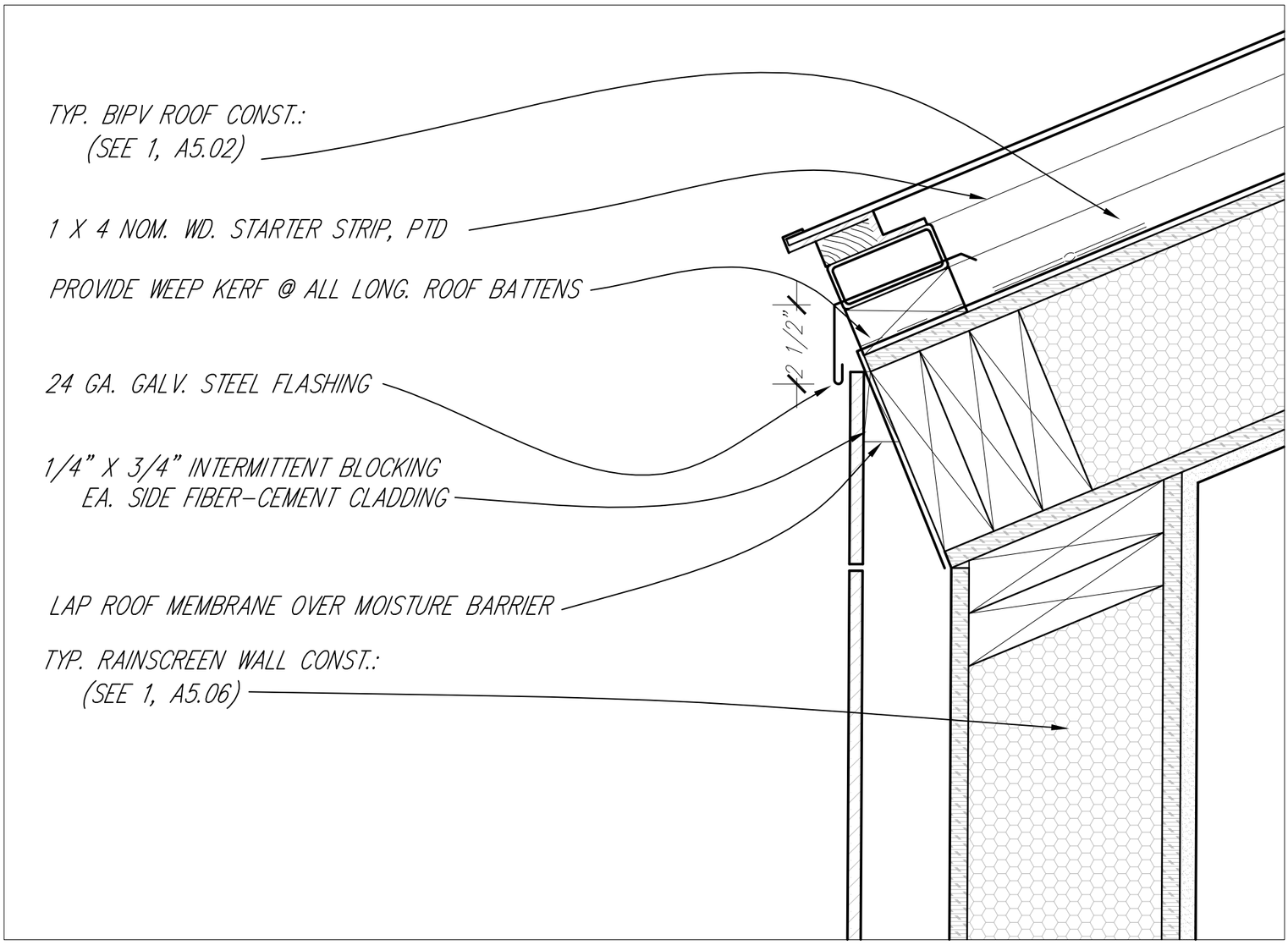

1 LOW EAVE: RAINSCREEN SIP WALL TO BIPV ROOF

3" – 1'-0"

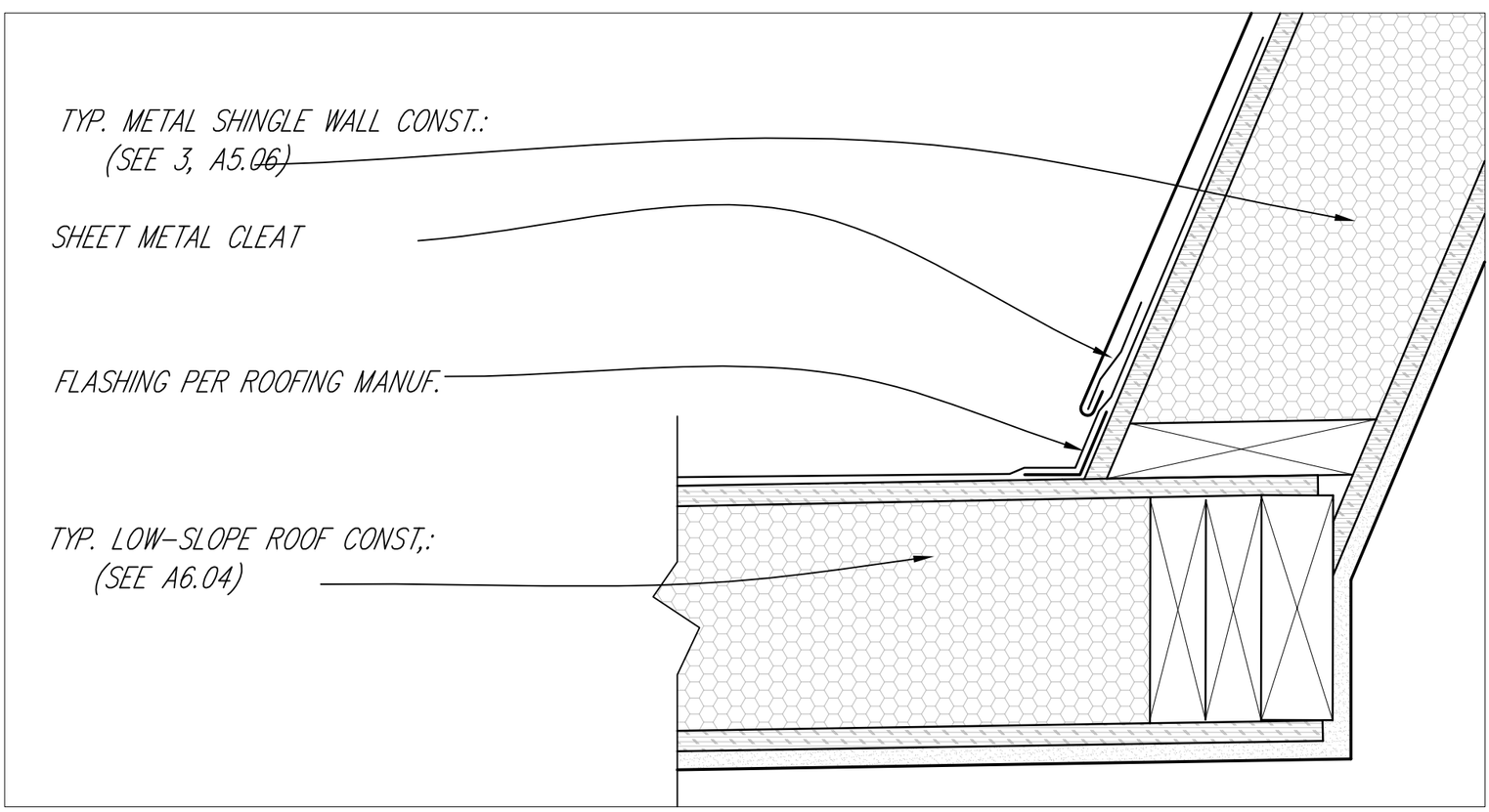

2 SIDEWALL CONNNECTION: METAL SHINGLE SIP WALL TO LOW-SLOPE SIP ROOF

3" – 1'-0"

A5.05

ROOF DETIALS

0 1.5" 3" 6" 1'

2007 Solar Decathlon

University of Colorado at Boulder

Civil, Environmental, and Architectural Engineering
428 UCB, Room ECCE 441
Boulder, CO 80309-0428

Drawn by	Date
NJS	August 7, 2007
Revised	Date

TYP. RAINSCREEN WALL CONSTRUCTION:
3/8" FIBER-CEMENT RAINSCREEN CLADDING ON
BATTEN FLASHING AS REQ., ON 2X2 NOM. BATTENS ON
1" THICK SUB-BATTEN ON "TYVEK THERMALWRAP"
MOISTURE BARRIER ON
6 5/8" SIP WALL PANEL:
1/2" G.W.B. INTERIOR WALL FINISH (LEVEL 5)

DOUBLE LAYER TYVEK MOISTURE BARRIER ON CORNER,
OVERLAP 6"

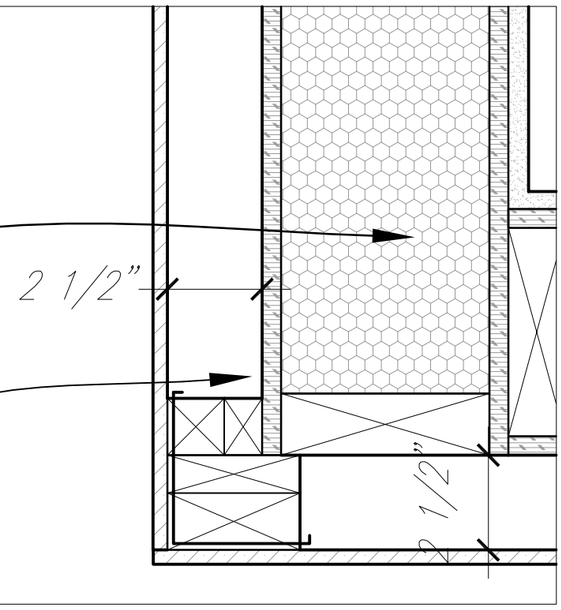

1 HORIZONTAL SECTION: RAINSCREEN SIP WALL CORNER

3" - 1'-0"

TYP. RAINSCREEN WALL CONST.:
(SEE 1, A5.06)

CELLULAR EPDM "P" GASKETS, TYP.

SOUTHCO DRAW LATCH
#A1-11-502-50 TO
WELD-ON RING AS REQ.

TYPICAL SHIPPING CONTAINER WALL CONSTRUCTION:
CORRUGATED STEEL S.C. WALL OVER
2 1/2" LIGHT GAUGE STEEL STUDS @ 16" O.C. W/
CLOSED-CELL POLYURETHANE SPRAY-FOAM INSUL.:
1/2"G.W.B. INTERIOR WALL FINISH (LEVEL 5)

FRY REGLET "Z" REVEAL MOLDING
#DRMZ-50-75

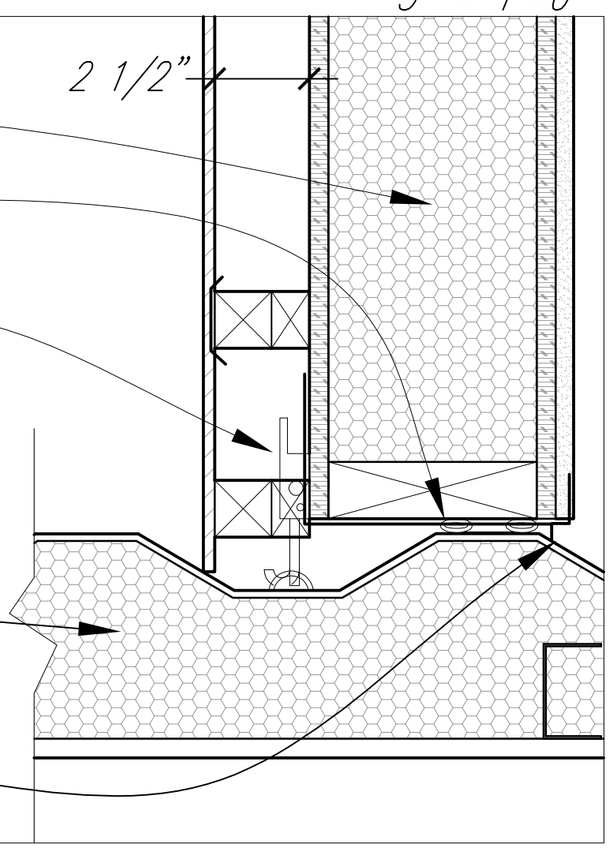

2 HORIZONTAL CONNECTION: RAINSCREEN SIP WALL TO CONTAINER

3" - 1'-0"

TYPICAL METAL SHINGLE WALL CONSTRUCTION:
24 GA. GALVANIZED STEEL SHINGLE OVER
"TYVEK THERMAWRAP" MOISTURE BARRIER ON
6 5/8" SIP WALL PANEL W/
1/2" G.W.B. INTERIOR WALL FINISH (LEVEL 5)

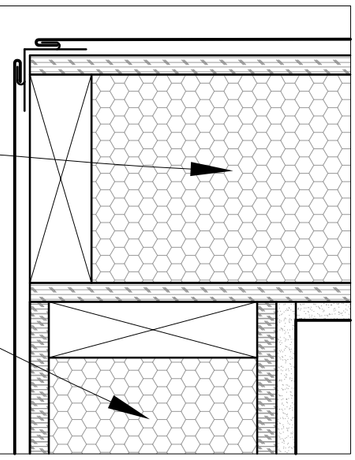

3 HORIZONTAL SECTION: METAL SHINGLE SIDING CORNER

3" - 1'-0"

A5.06

Wall Details

0 1.5" 3" 6" 1'

2007 Solar Decathlon

University of Colorado at Boulder
Civil, Environmental, and Architectural Engineering
428 UCB, Room ECCE 441
Boulder, CO 80309-0428

Drawn by	Date
NJS	August 7, 2007
Revised	Date

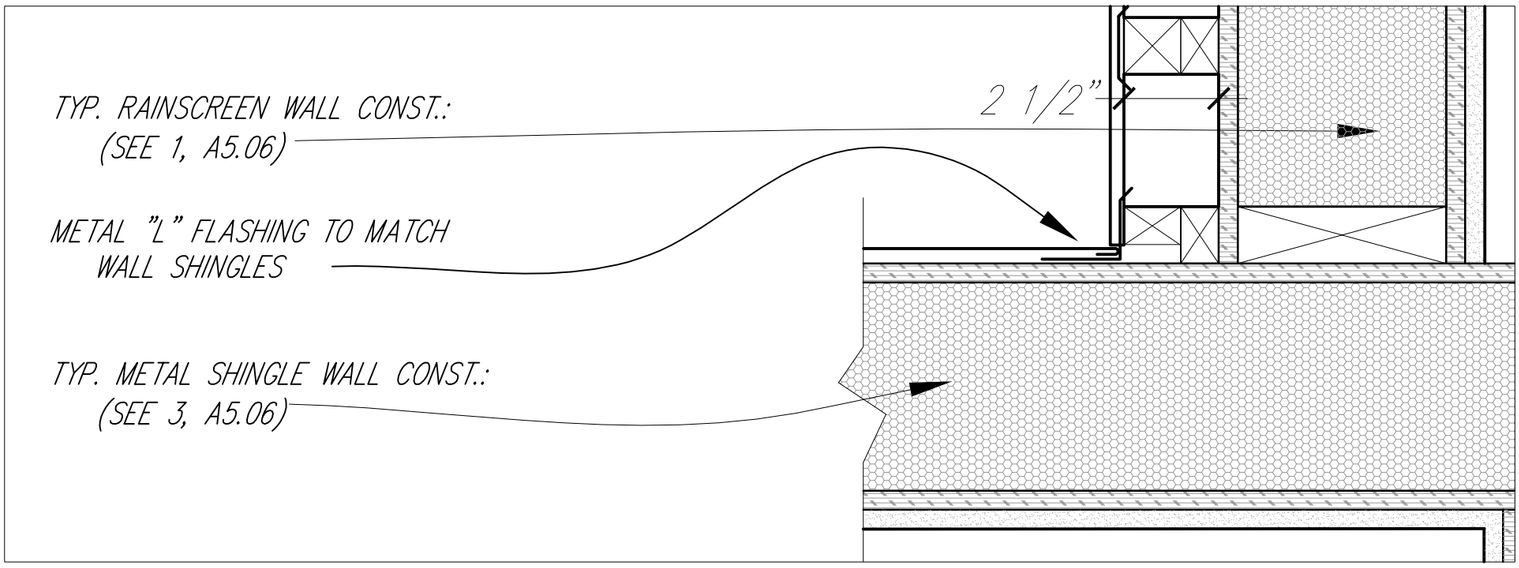

1 HORIZONTAL CONNECTION: STEEL SHINGLE SIP WALL TO RAINSCREEN SIP WALL

3" – 1'-0"

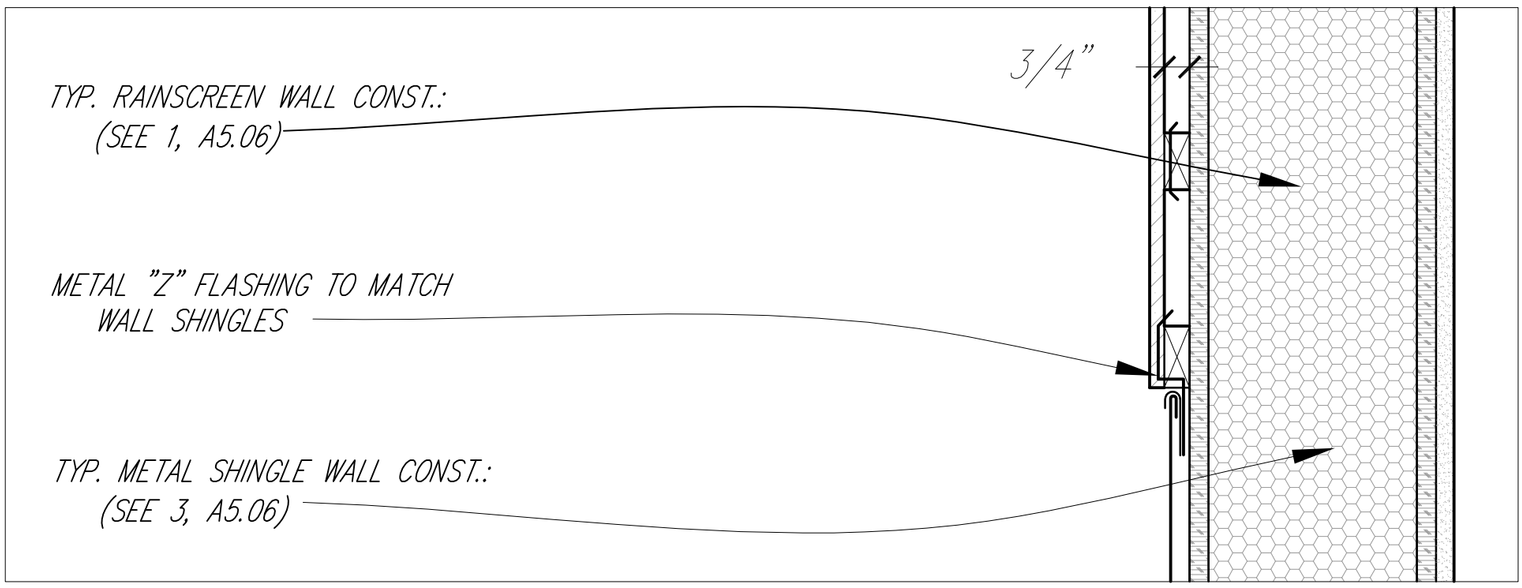

2 HORIZONTAL CONNECTION: METAL SHINGLE SIDING TO RAINSCREEN SIDING

3" – 1'-0"

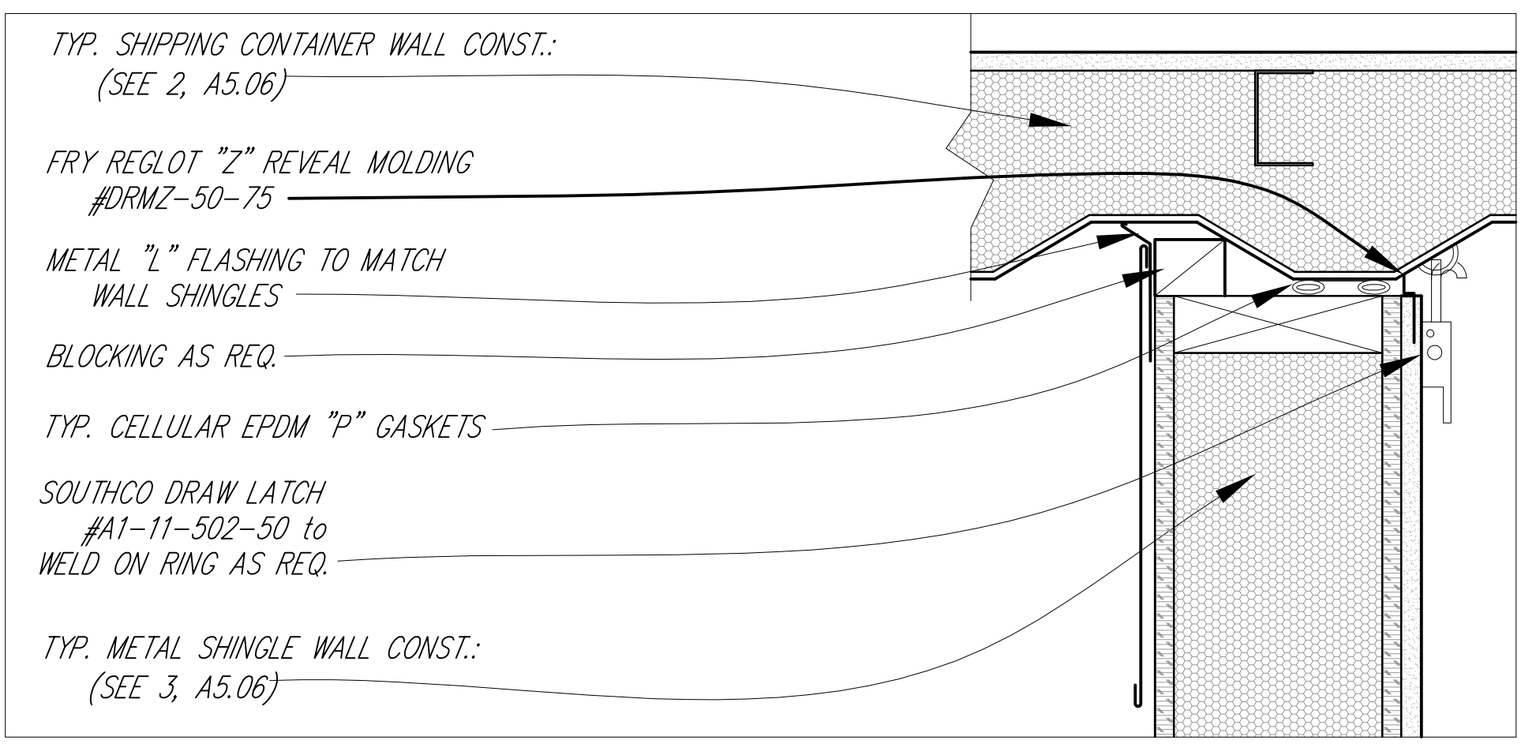

3 HORIZONTAL CONNECTION: METAL SHINGLE SIP WALL TO SHIPPING CONTAINER

3" – 1'-0"

A5.07

Wall Details

0 1.5" 3" 6" 1'

2007 Solar Decathlon

University of Colorado at Boulder

Civil, Environmental, and Architectural Engineering
428 UCB, Room ECCE 441
Boulder, CO 80309-0428

Drawn by	Date
NJS	August 7, 2007
Revised	Date

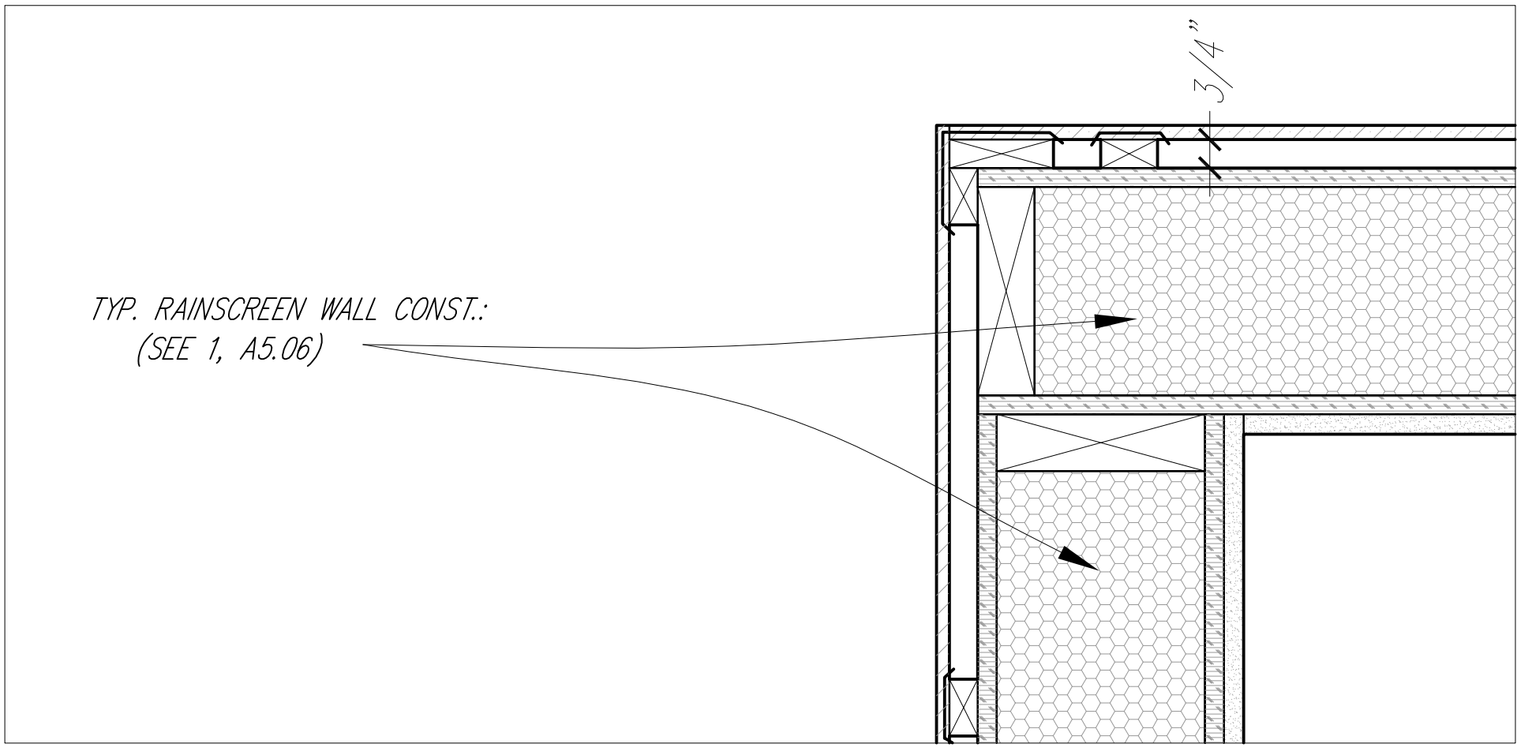

1 HORIZONTAL SECTION: PAPERSTONE SIP WALL(NORTH BEDROOM)

3" – 1'-0"

A5.08

Wall Details

0 1.5" 3" 6" 1'

2007 Solar Decathlon

University of Colorado at Boulder

Civil, Environmental, and Architectural Engineering
428 UCB, Room ECCE 441
Boulder, CO 80309-0428

Drawn by	Date
NJS	August 7, 2007
Revised	Date

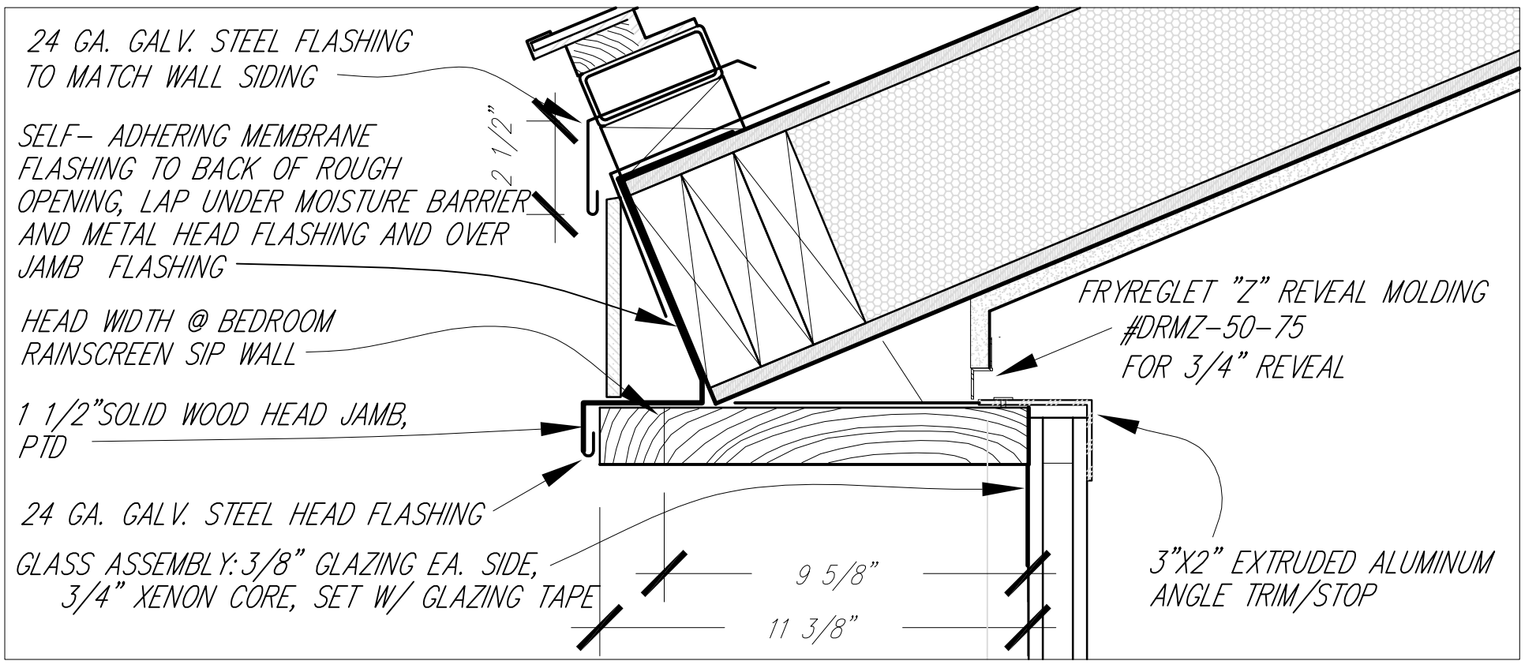

1 Office Window Head Detail

3" – 1'-0"

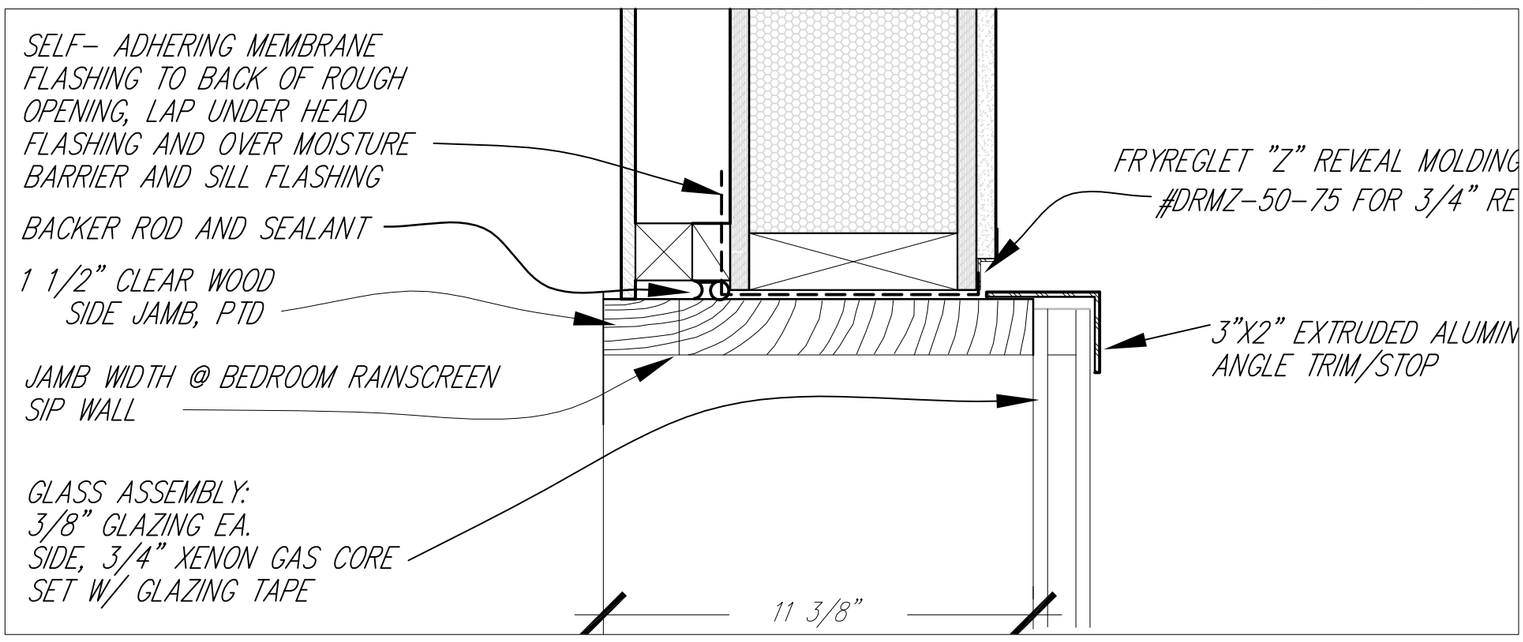

2 Office Window Jamb Detail

3" – 1'-0"

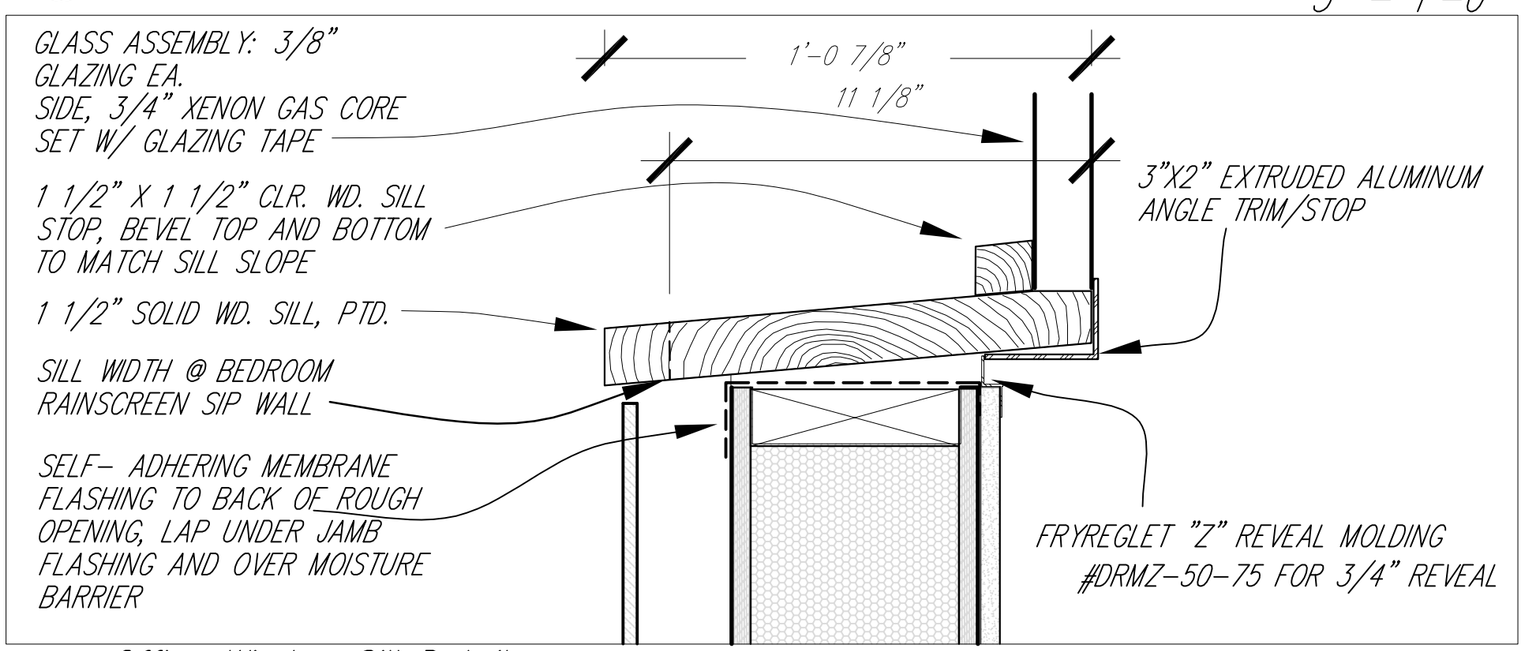

3 Office Window Sill Detail

3" – 1'-0"

A5.09

SIP/Site Glazing Details

0 1.5" 3" 6" 1'

2007 Solar Decathlon

University of Colorado at Boulder
Civil, Environmental, and Architectural Engineering
428 UCB, Room ECCE 441
Boulder, CO 80309-0428

Drawn by	Date
NJS	August 7, 2007
Revised	Date

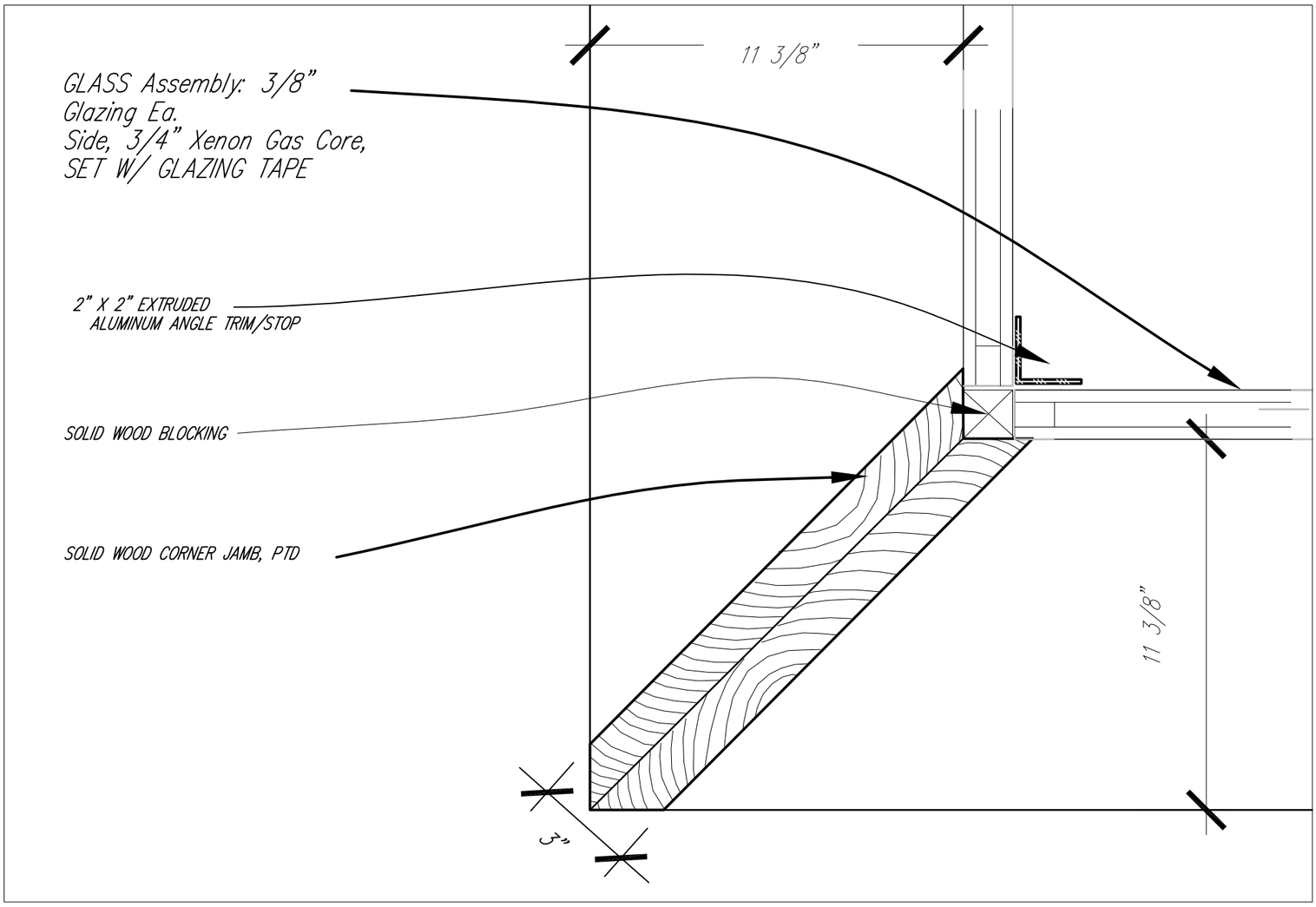

1 SE CORNER JAMB DETAIL

3" – 1'-0"

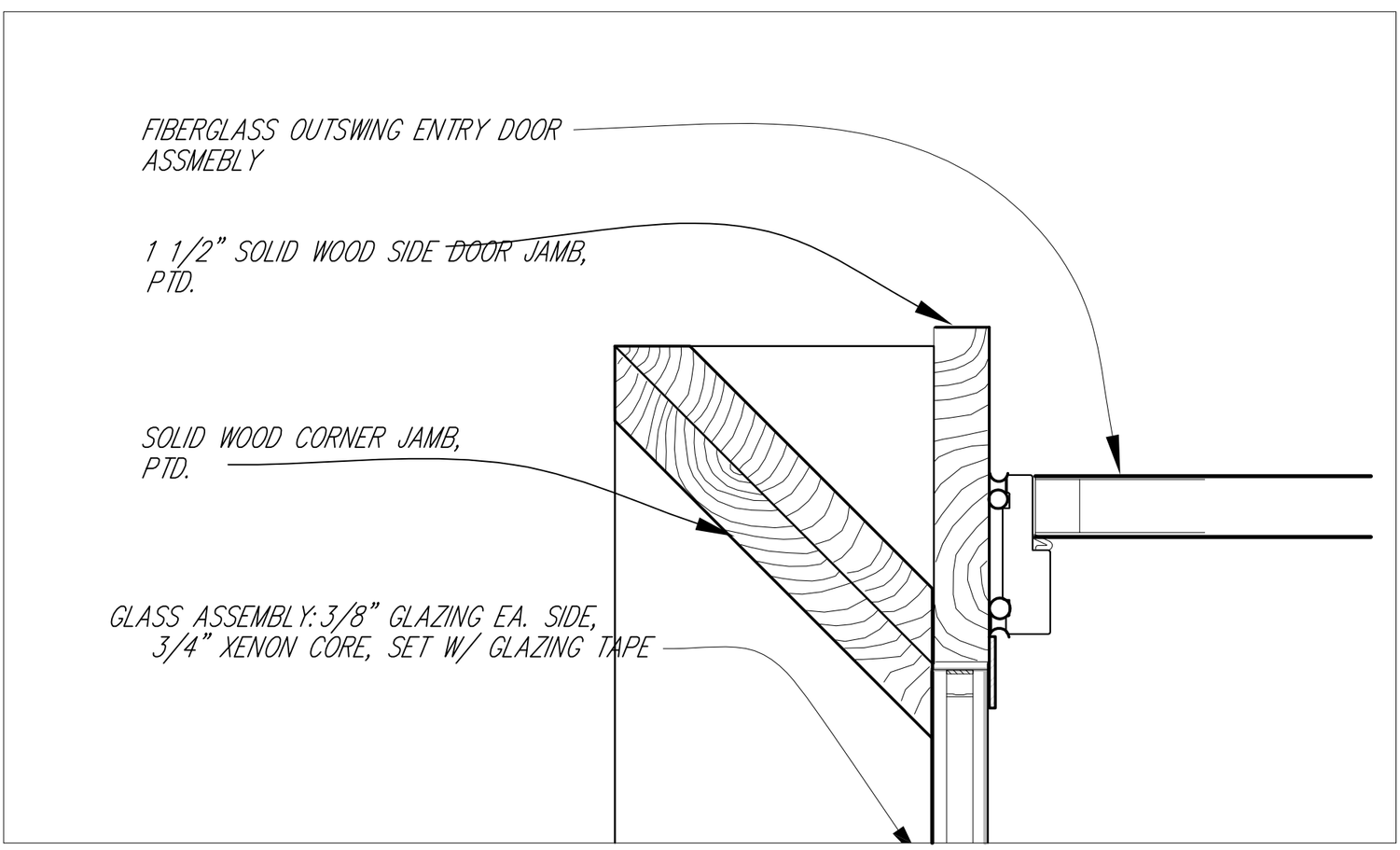

2 SW CORNER JAMB DETAIL

3" – 1'-0"

A5.10

SIP/Site Glazing Details

0 1.5" 3" 6' 1'

2007 Solar Decathlon

University of Colorado at Boulder

Civil, Environmental, and Architectural Engineering
428 UCB, Room ECCE 441
Boulder, CO 80309-0428

Drawn by	Date
NJS	August 7, 2007
Revised	Date

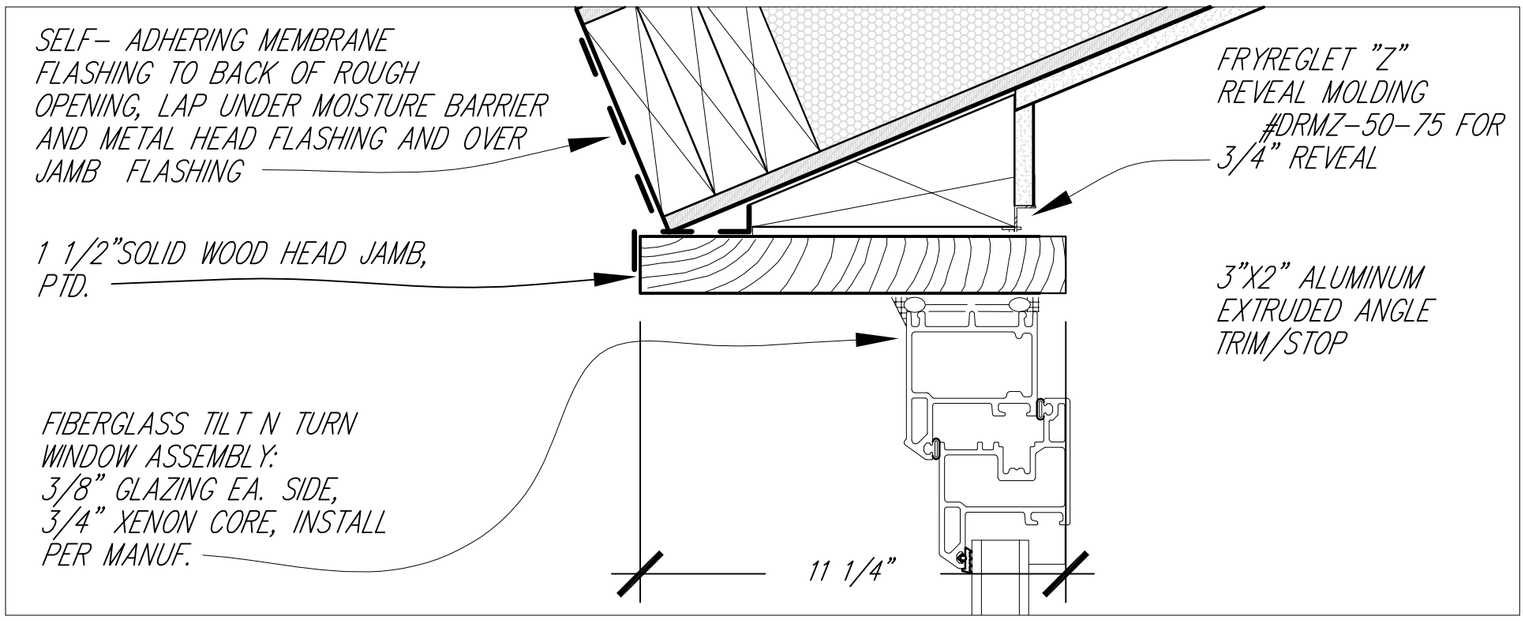

1 SW WINDOW HEAD DETAIL

3" - 1'-0"

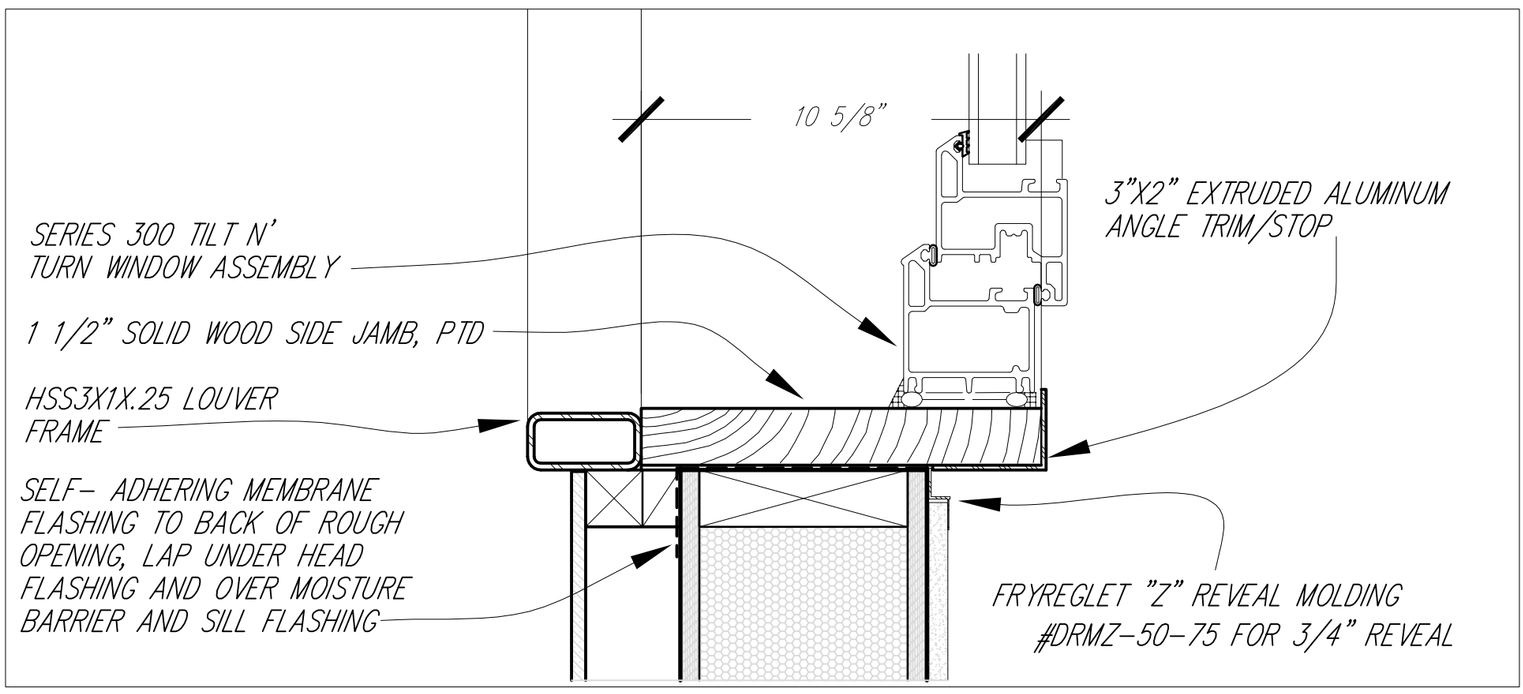

2 SW WINDOW JAMB DETAIL

3" - 1'-0"

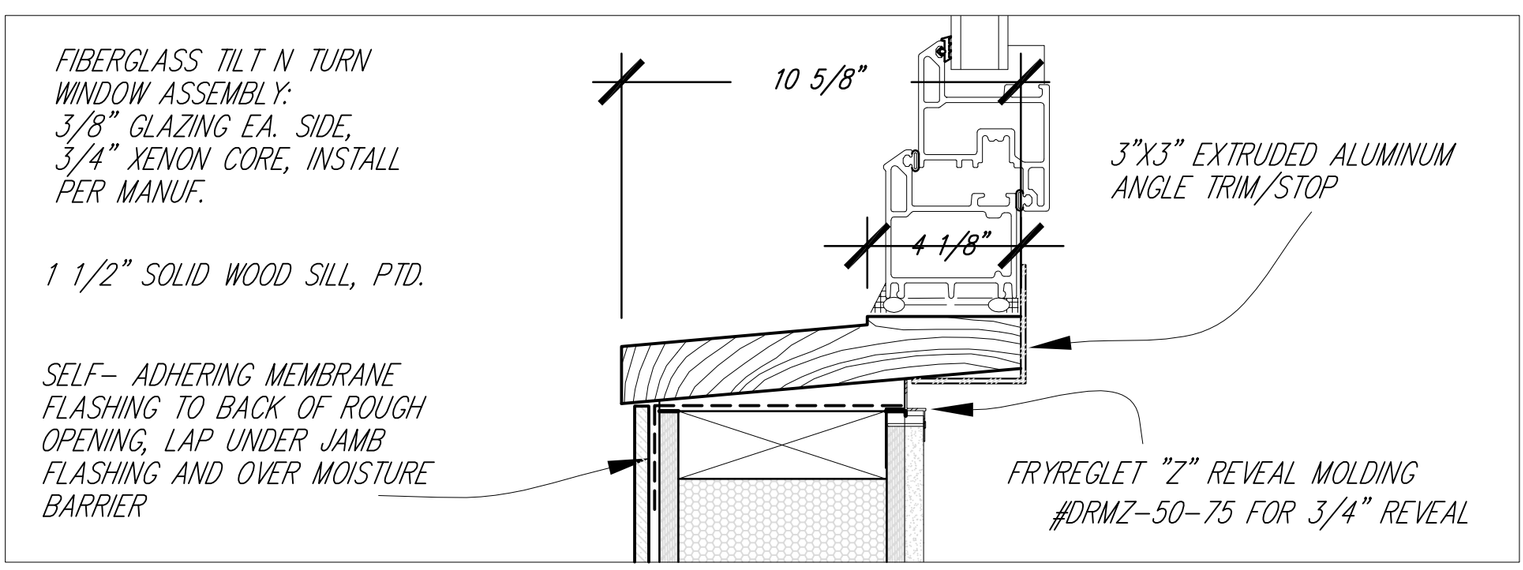

3 SW WINDOW SILL DETAIL

3" - 1'-0"

A5.11

SIP/Operable Window Details

0 1.5" 3" 6" 1'

2007 Solar Decathlon

University of Colorado at Boulder
Civil, Environmental, and Architectural Engineering
428 UCB, Room ECCE 441
Boulder, CO 80309-0428

Drawn by	Date
NJS	August 7, 2007
Revised	Date

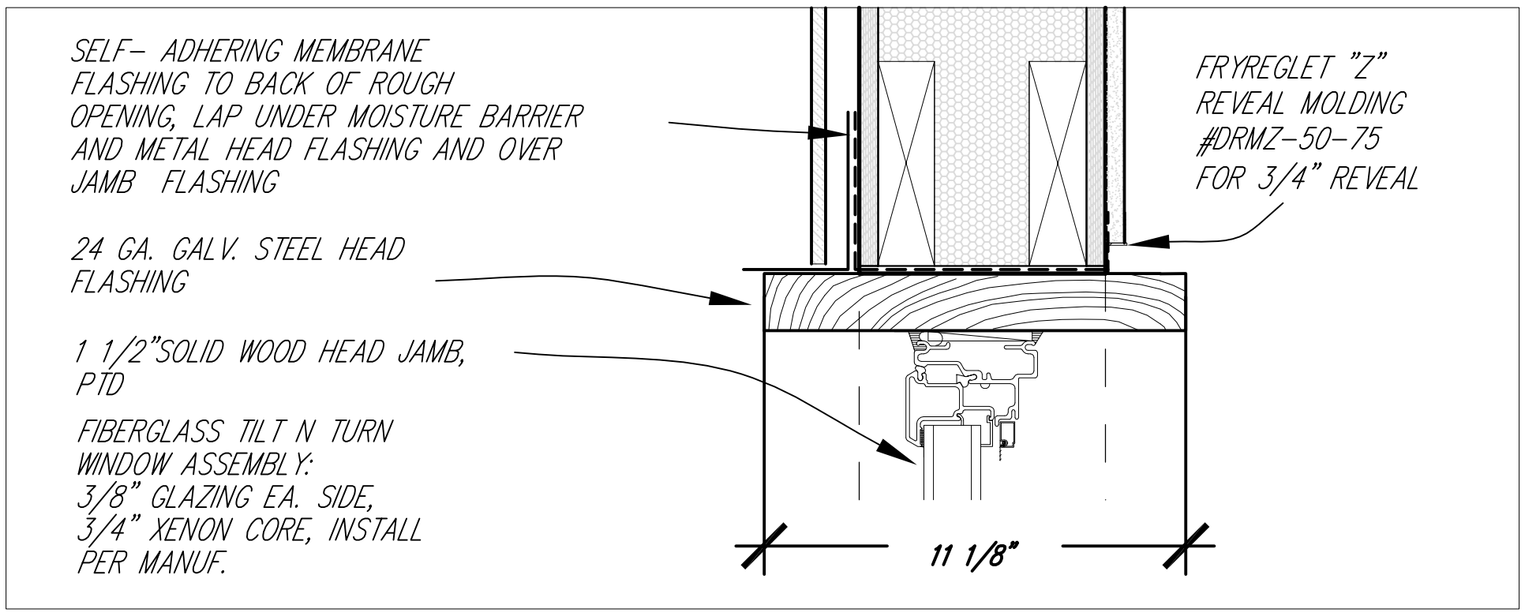

1 Bedroom Window Head Detail

3" - 1'-0"

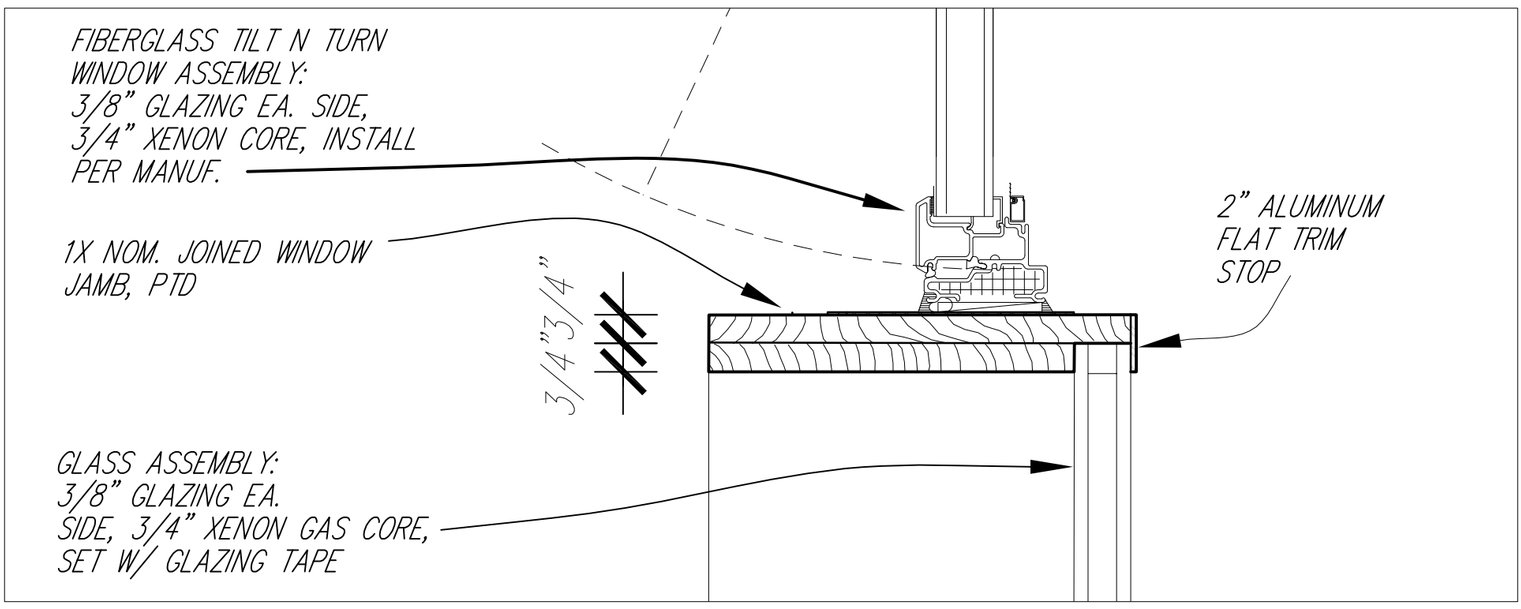

2 Bedroom Center Window Jamb Detail

3" - 1'-0"

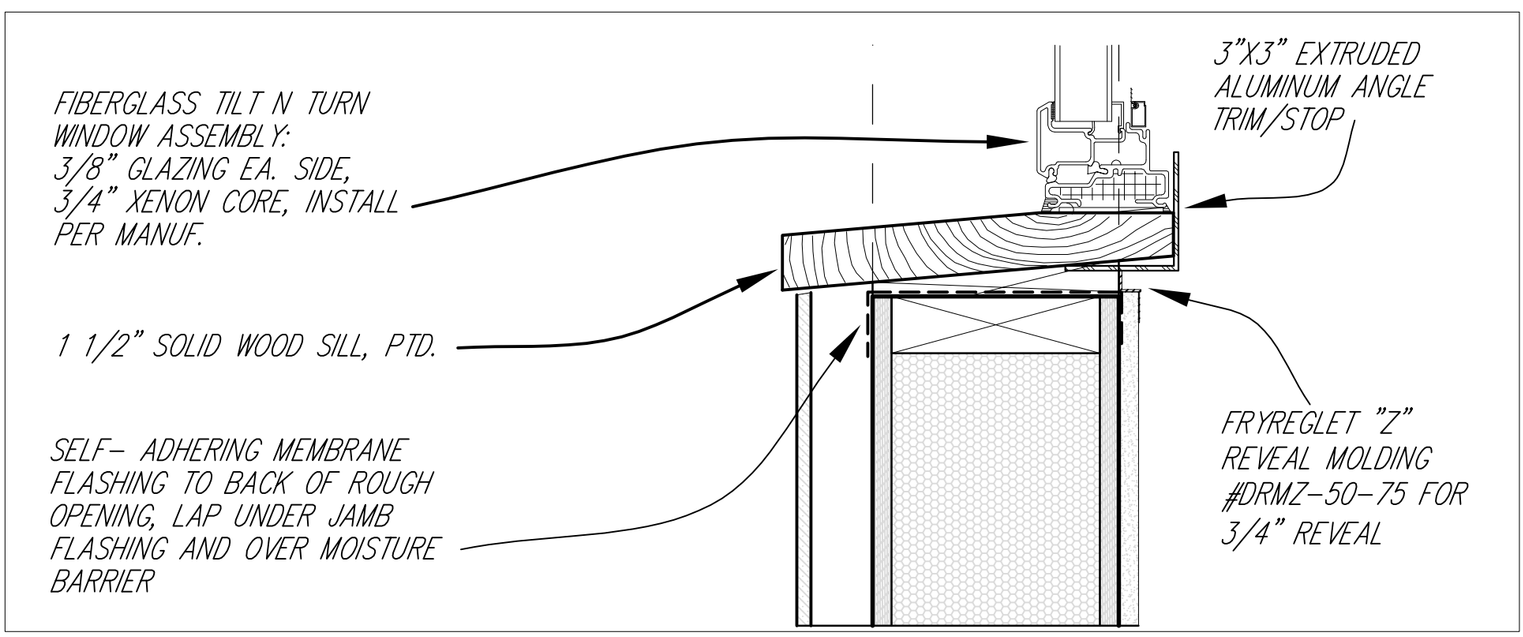

3 Bedroom Window Sill Detail

3" - 1'-0"

A5.12

SIP/Operable Window Details

0 1.5" 3" 6" 1'

2007 Solar Decathlon

University of Colorado at Boulder
Civil, Environmental, and Architectural Engineering
428 UCB, Room ECCE 441
Boulder, CO 80309-0428

Drawn by	Date
NJS	August 7, 2007
Revised	Date

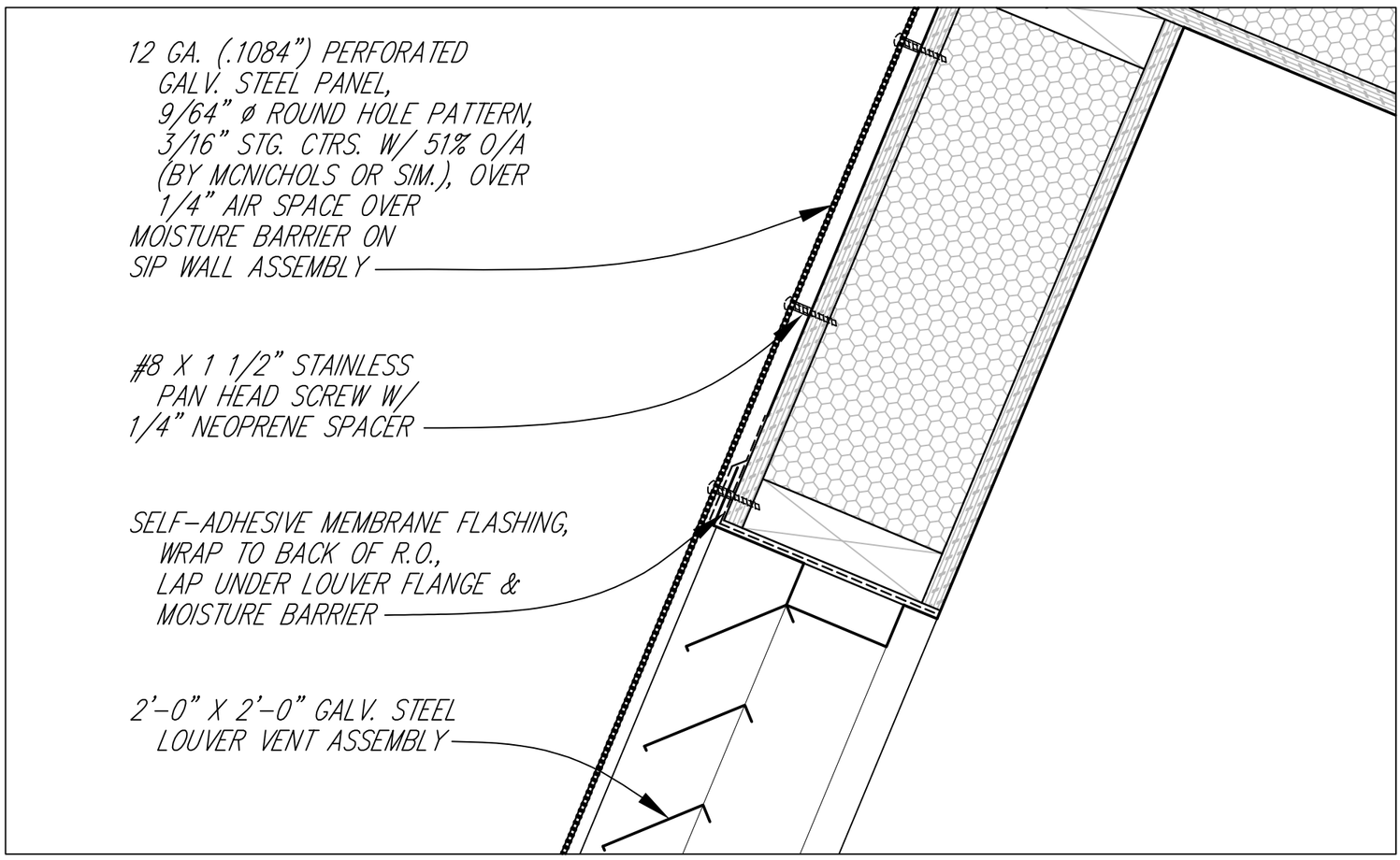

1 LOUVER HEAD @ MECH. ATTIC

3" = 1'-0"

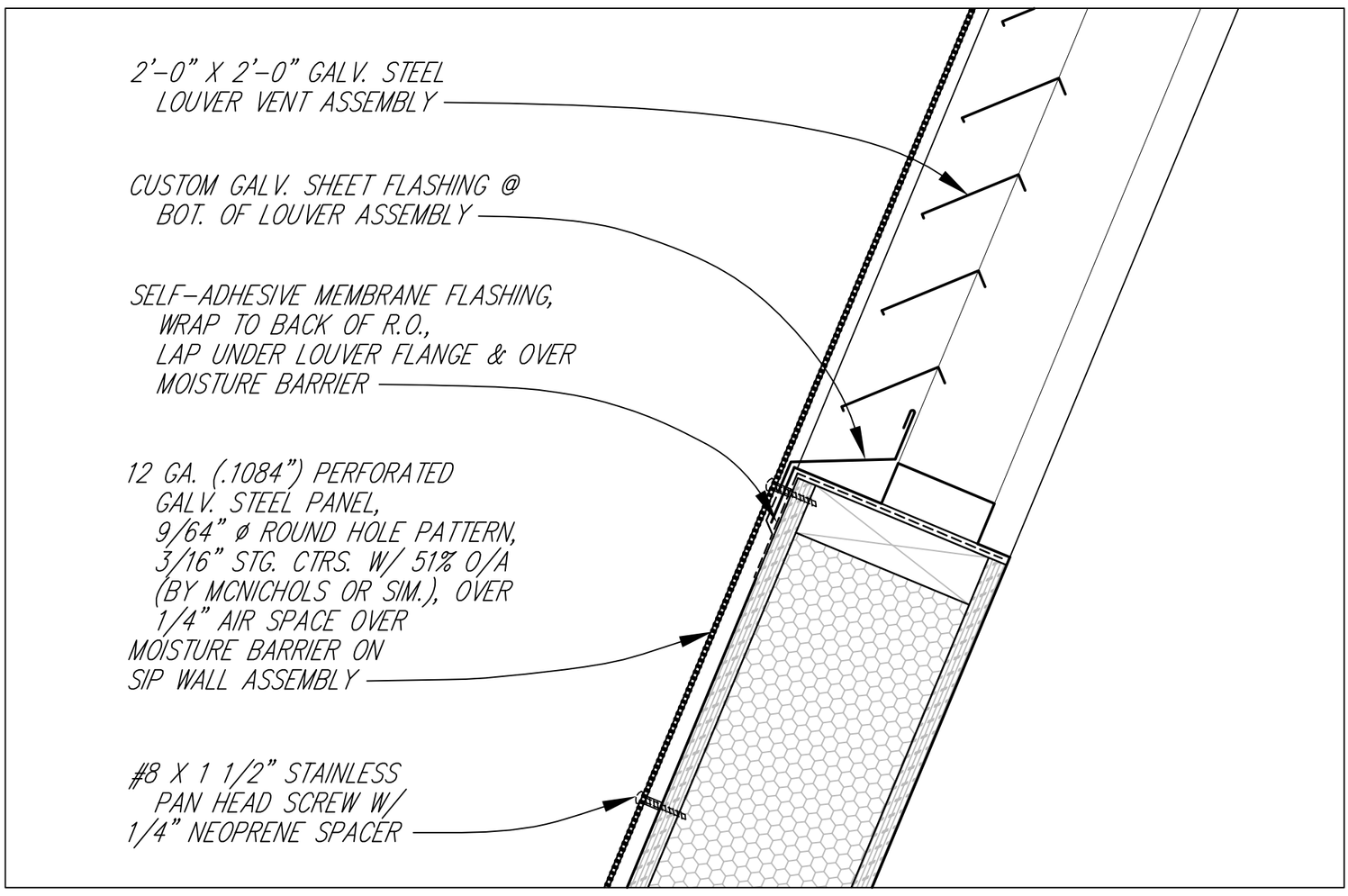

2 LOUVER SILL @ MECH. ATTIC

3" = 1'-0"

A5.13

Louver Details @ Mech. Attic

0 1.5" 3" 6" 1'

2007 Solar Decathlon

University of Colorado at Boulder

Civil, Environmental, and Architectural Engineering
428 UCB, Room ECCE 441
Boulder, CO 80309-0428

Drawn by	Date
J.Reilly	August 7, 2007
Revised	Date

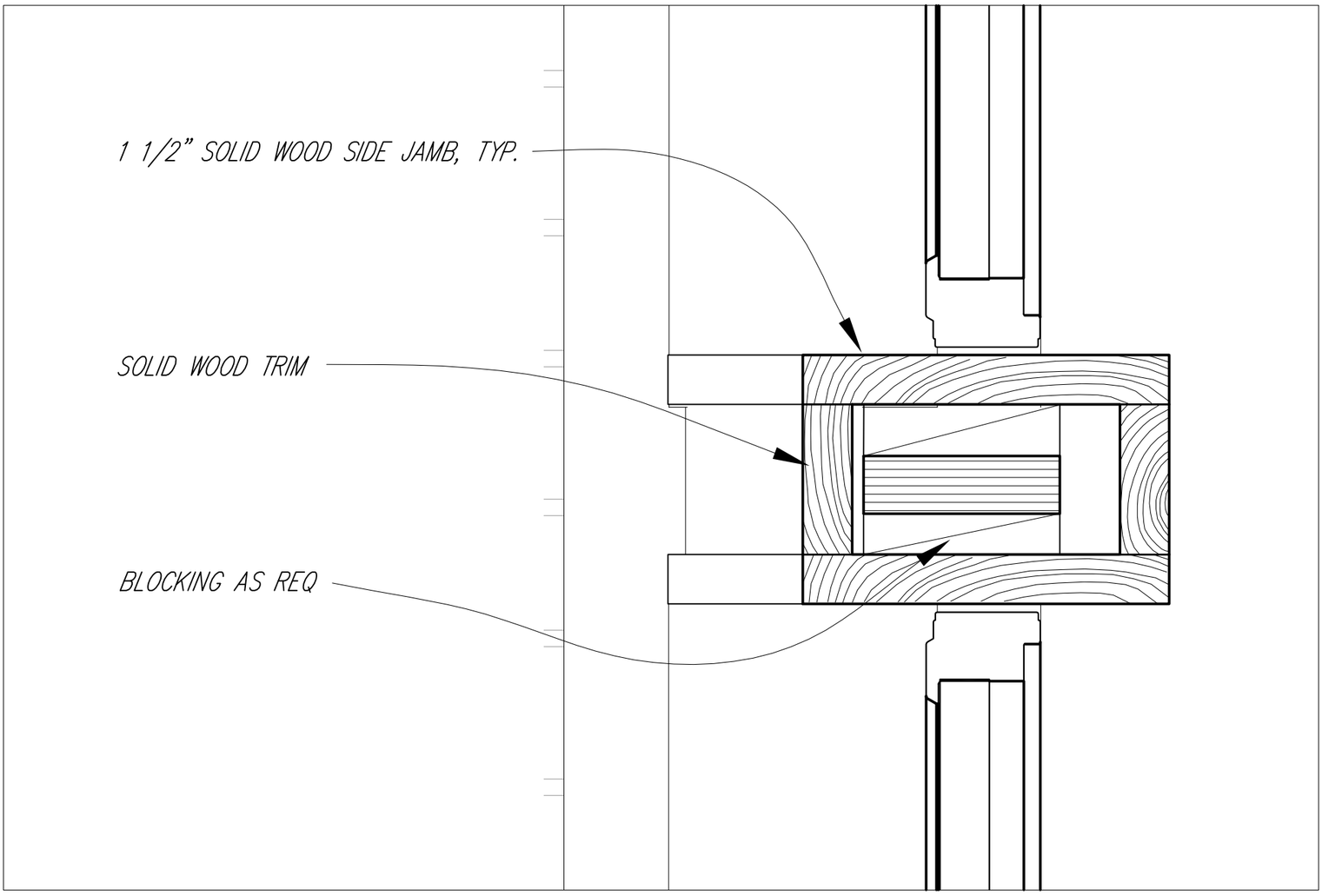

1 Lower Clerestory Window Jamb Detail

3" – 1'-0"

A5.14

Operable Clerestory Details

0 1.5" 3" 6" 1'

2007 Solar Decathlon

University of Colorado at Boulder

Civil, Environmental, and Architectural Engineering
428 UCB, Room ECCE 441
Boulder, CO 80309-0428

Drawn by	Date
NJS	August 7, 2007
Revised	Date

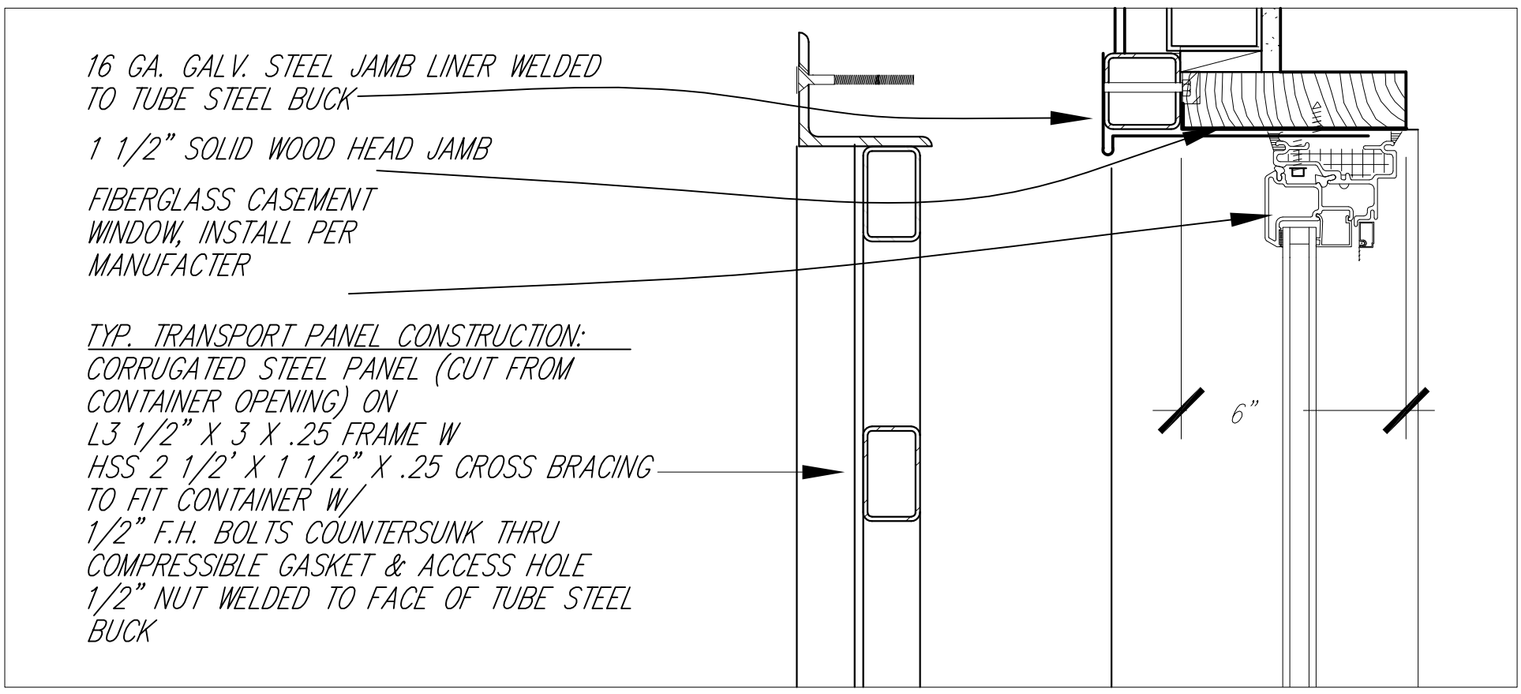

1 S.C. Window Head Detail

3" – 1'-0"

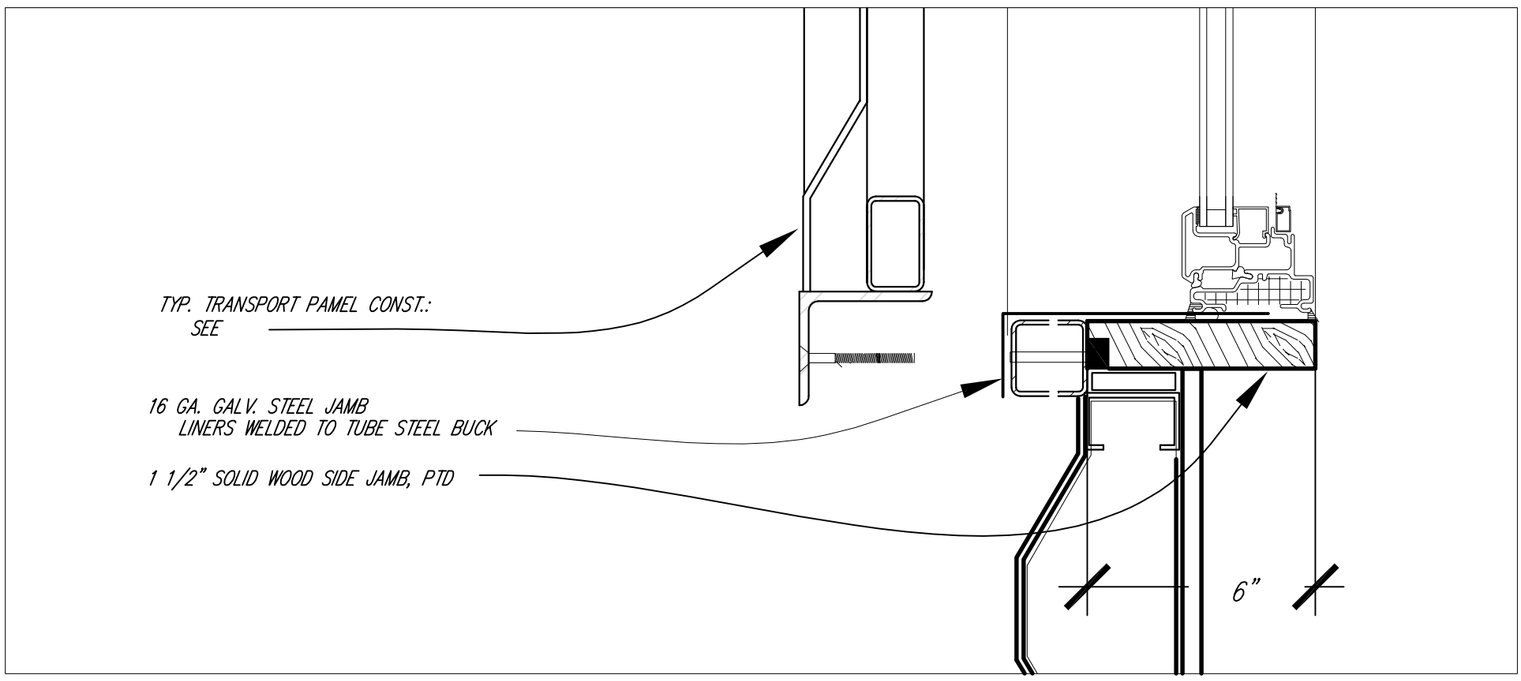

2 S.C. Window Jamb Detail

3" – 1'-0"

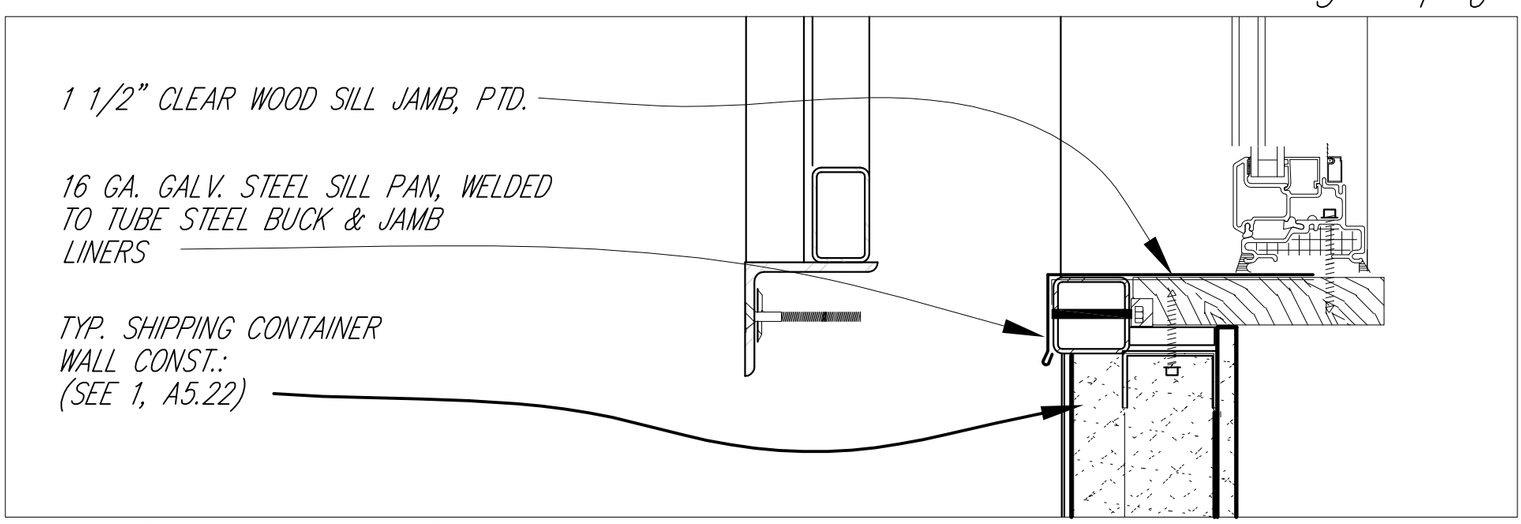

3 S.C. Window Jamb Detail

3" – 1'-0"

A5.15

S.C. Window Details

0 1.5" 3" 6" 1'

2007 Solar Decathlon

University of Colorado at Boulder

Civil, Environmental, and Architectural Engineering
428 UCB, Room ECCE 441
Boulder, CO 80309-0428

Drawn by	Date
NJS	August 7, 2007
Revised	Date

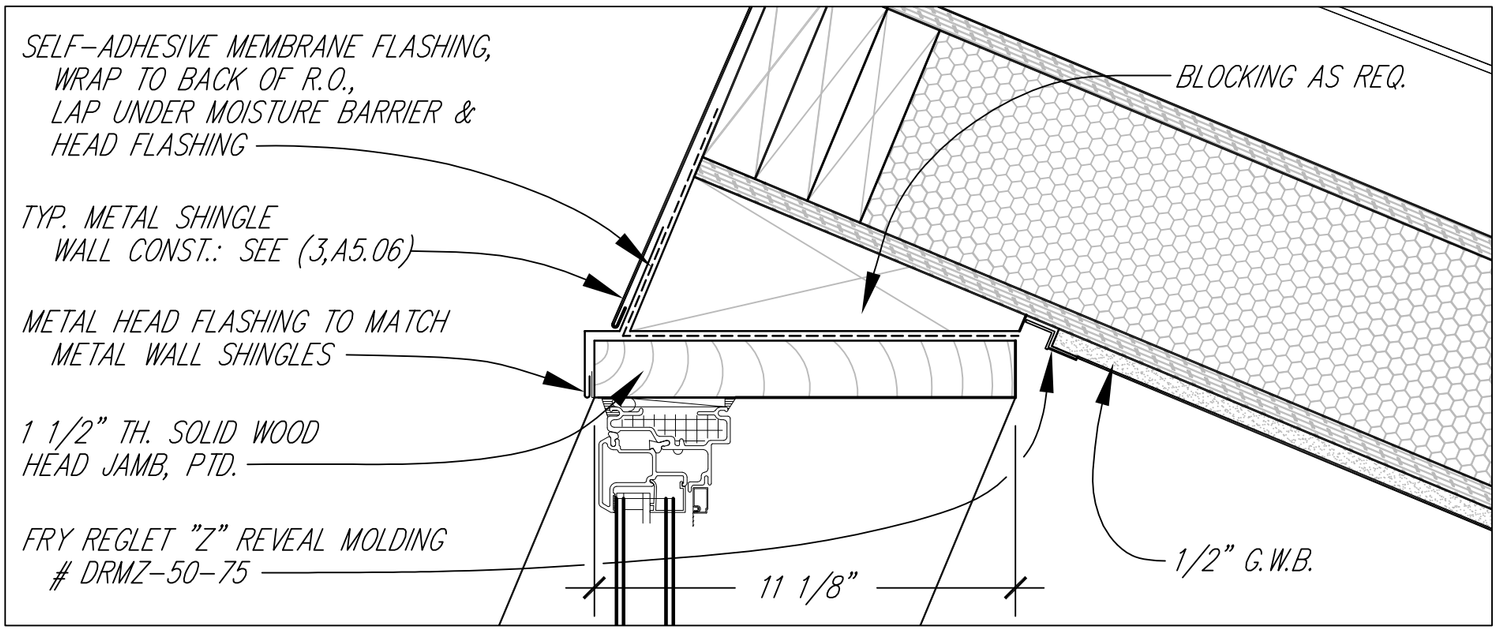

1 WINDOW HEAD @ LOFT CLERESTORY

3" = 1'-0"

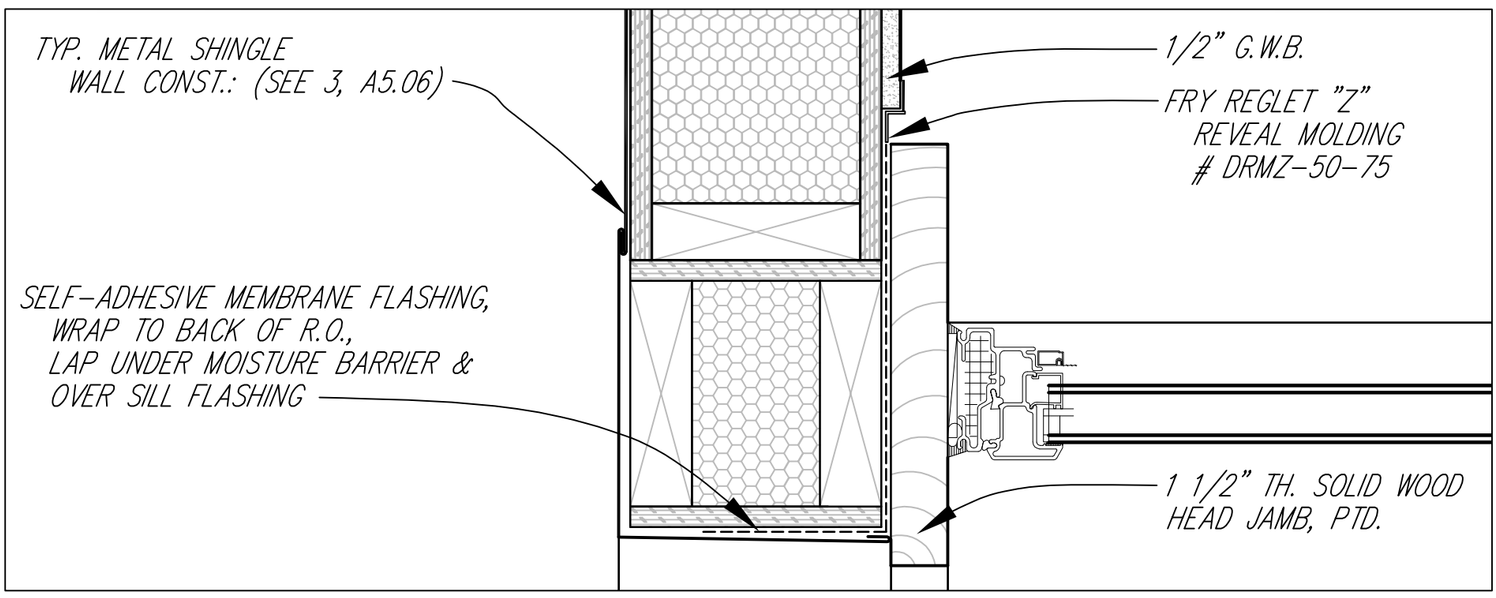

2 JAMB DETAIL @ LOFT CLERESTORY

3" = 1'-0"

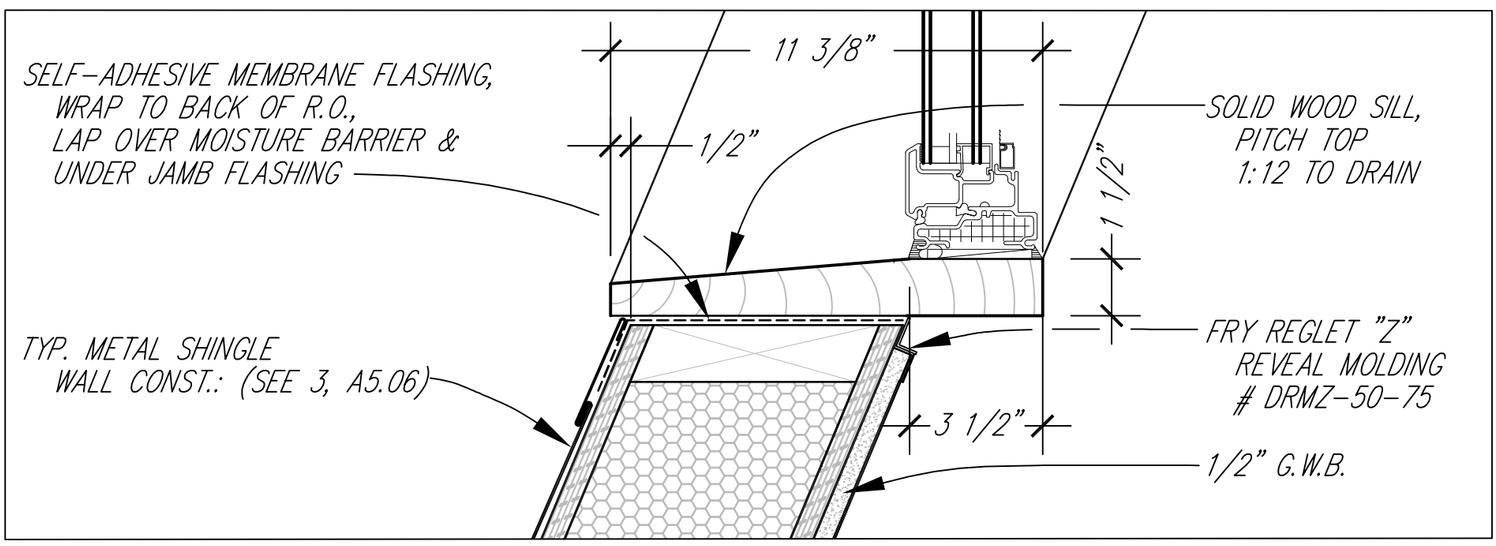

3 WINDOW SILL @ LOFT CLERESTORY

3" = 1'-0"

A5.16

Loft Clerestory Window Details

0 1.5" 3" 6" 1'

2007 Solar Decathlon

University of Colorado at Boulder

Civil, Environmental, and Architectural Engineering
428 UCB, Room ECCE 441
Boulder, CO 80309-0428

Drawn by	Date
J.Reilly	August 7, 2007
Revised	Date

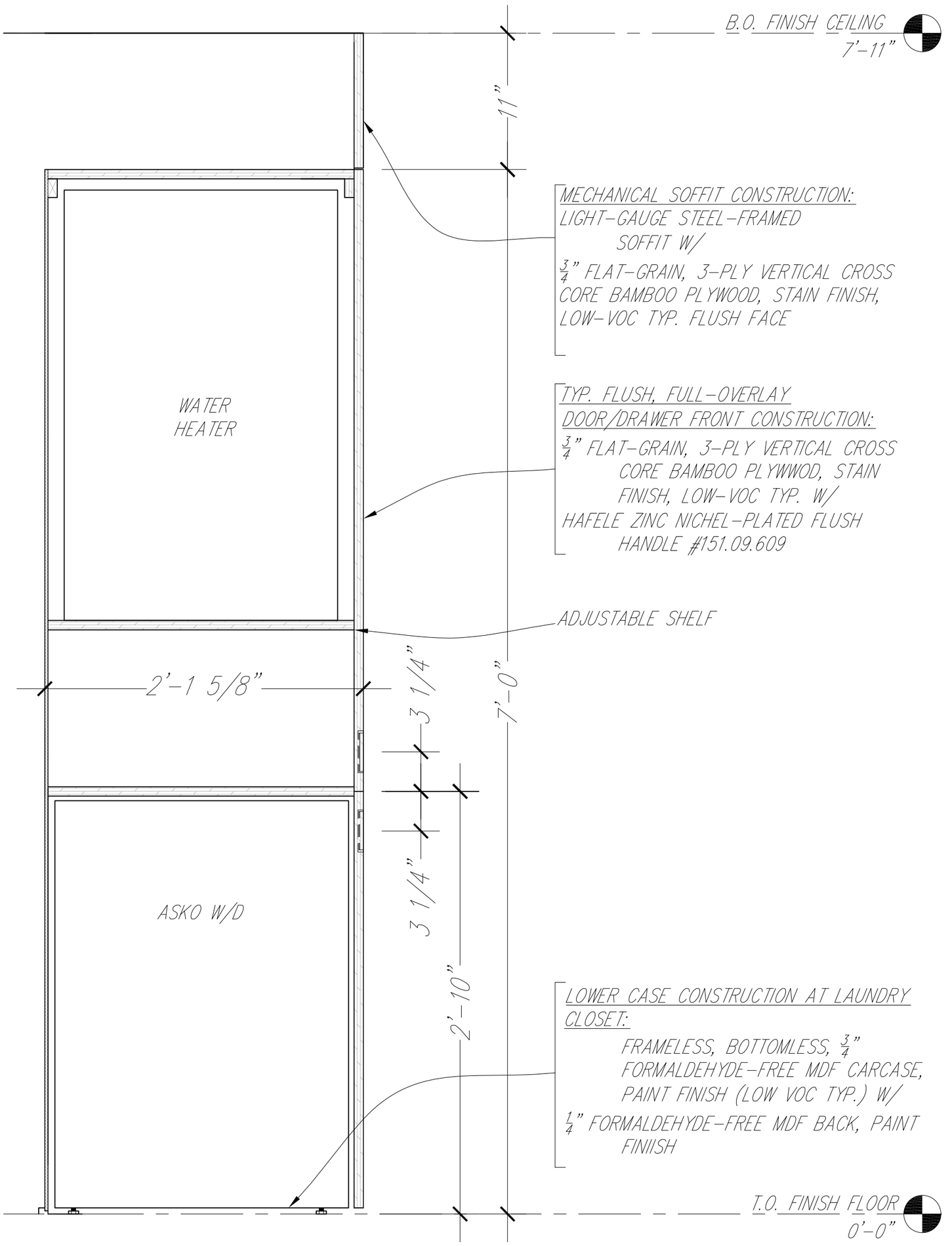

1 KITCHEN SECTION A-A
1 1/2" = 1'-0"

A6.01

Kitchen Cabinet Section A-A

0 3" 6" 1' 2'

2007 Solar Decathlon

University of Colorado at Boulder

Civil, Environmental, and Architectural Engineering
428 UCB, Room ECCE 441
Boulder, CO 80309-0428

Drawn by	Date
A.Rude	August 7, 2007
Revised	Date

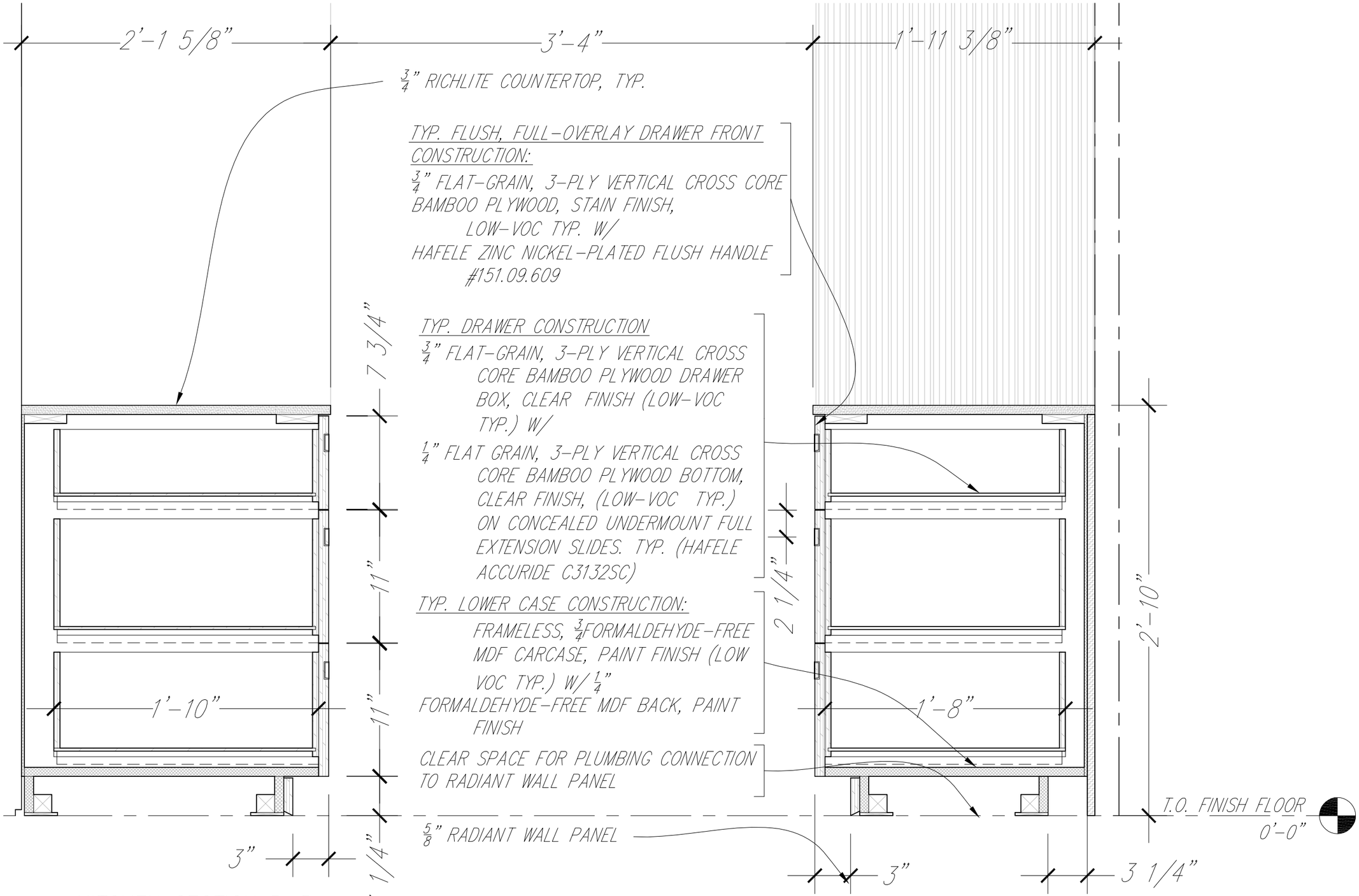

1 KITCHEN SECTION B-B
1 1/2"" = 1'-0"

Drawn by	Date
A.Rude	August 7, 2007
Revised	Date

2007 Solar Decathlon

University of Colorado at Boulder
Civil, Environmental, and Architectural Engineering
428 UCB, Room ECCE 441
Boulder, CO 80309-0428

Kitchen Cabinet Section B-B

0 3" 6" 1' 2'

A6.02

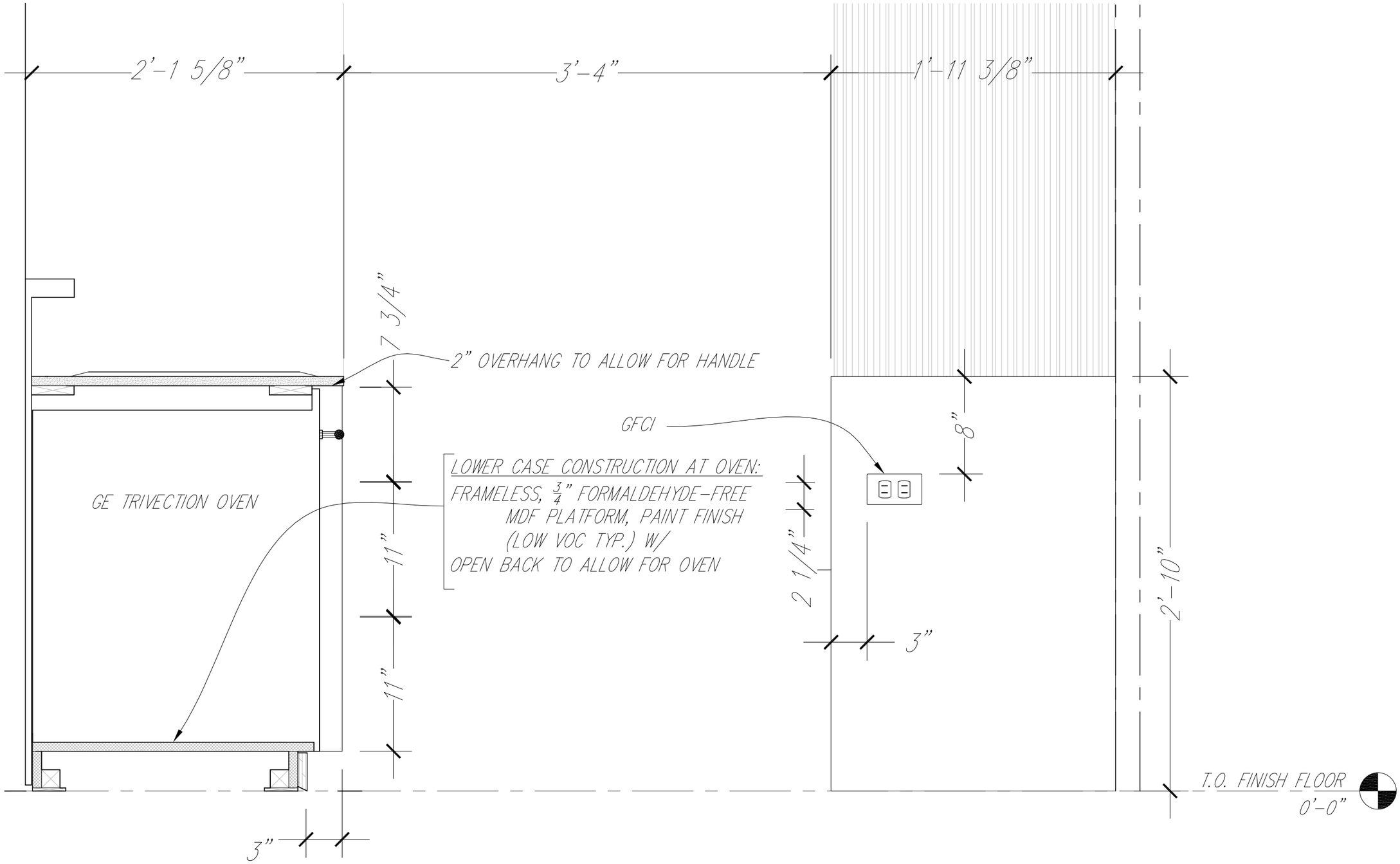

1 KITCHEN SECTIION C-C
1 1/2" = 1'-0"

Drawn by	Date
A.Rude	August 7, 2007
Revised	Date

2007 Solar Decathlon

University of Colorado at Boulder
Civil, Environmental, and Architectural Engineering
428 UCB, Room ECCE 441
Boulder, CO 80309-0428

Kitchen Cabinet Section C-C

0 3" 6" 1' 2'

A6.03

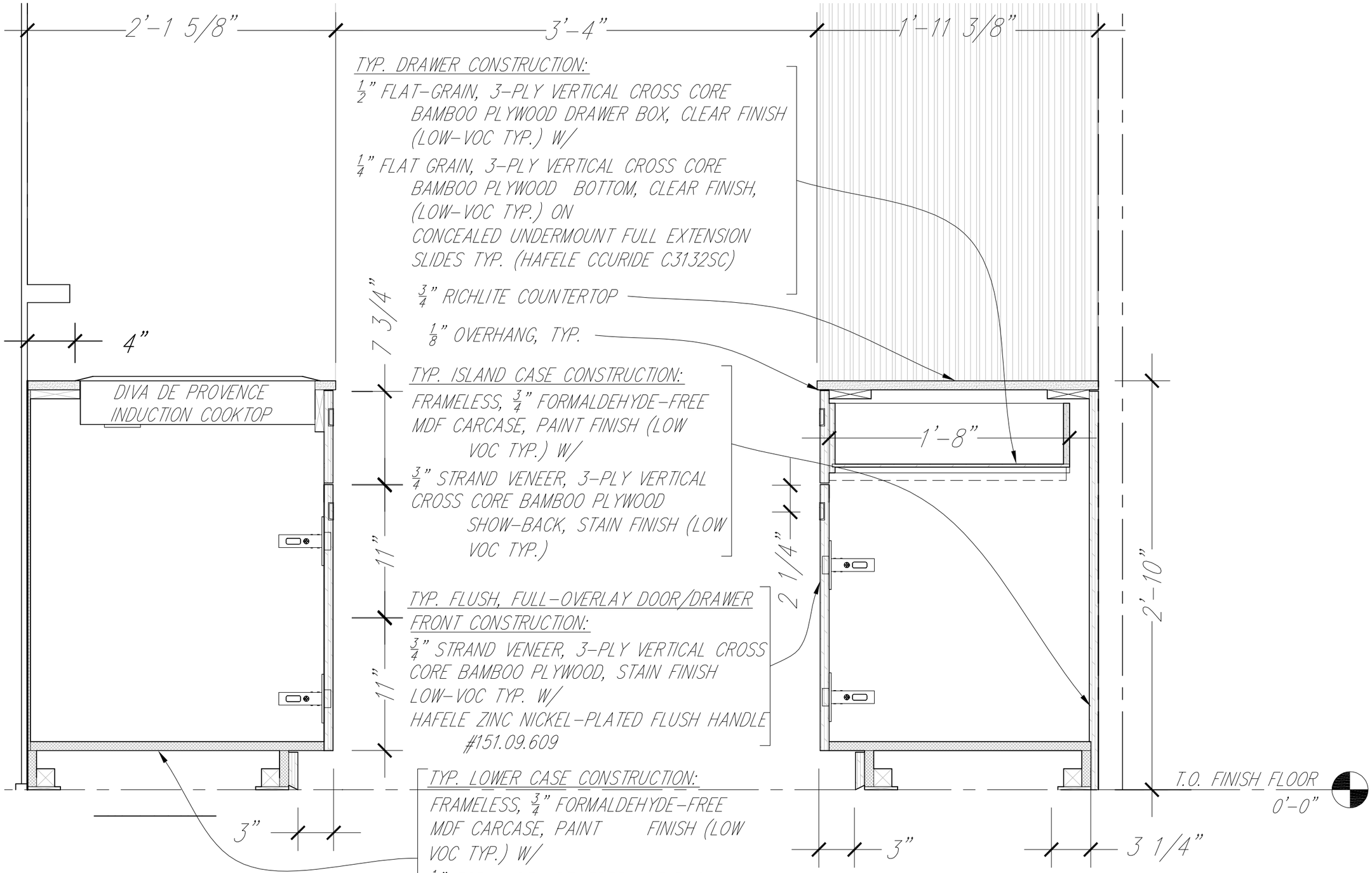

1 KITCHEN SECTION D-D
1 1/2" = 1'-0"

Drawn by	Date
A.Rude	August 7, 2007
Revised	Date

2007 Solar Decathlon

University of Colorado at Boulder
Civil, Environmental, and Architectural Engineering
428 UCB, Room ECCE 441
Boulder, CO 80309-0428

Kitchen Cabinet Section D-D

0 3" 6" 1' 2'

A6.04

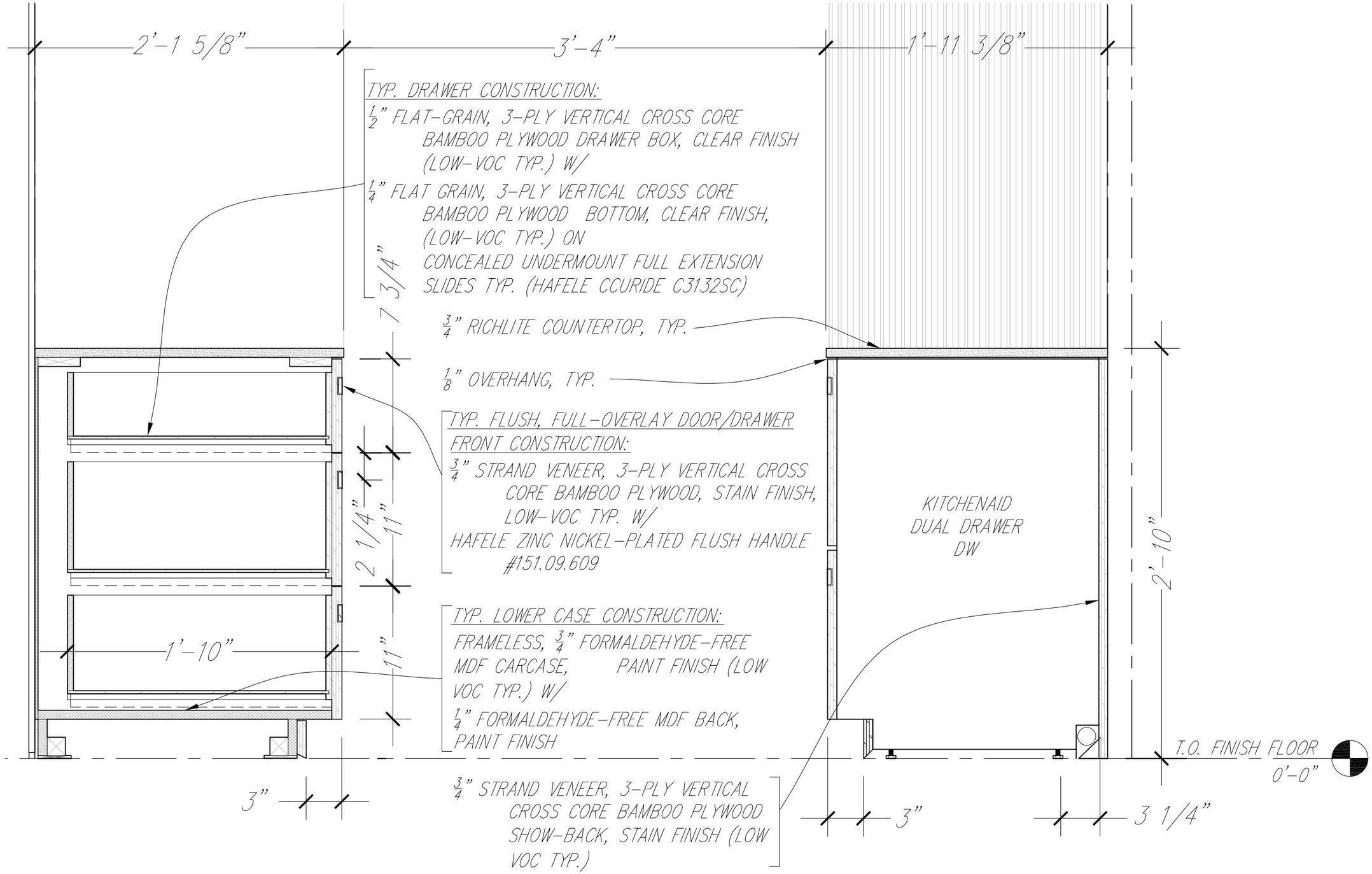

1 KITCHEN SECTION E-E
1 1/2" = 1'-0"

Drawn by	Date
A.Rude	August 7, 2007
Revised	Date

2007 Solar Decathlon

University of Colorado at Boulder
Civil, Environmental, and Architectural Engineering
428 UCB, Room ECCE 441
Boulder, CO 80309-0428

Kitchen Cabinet Section E-E

0 3" 6" 1' 2'

A6.05

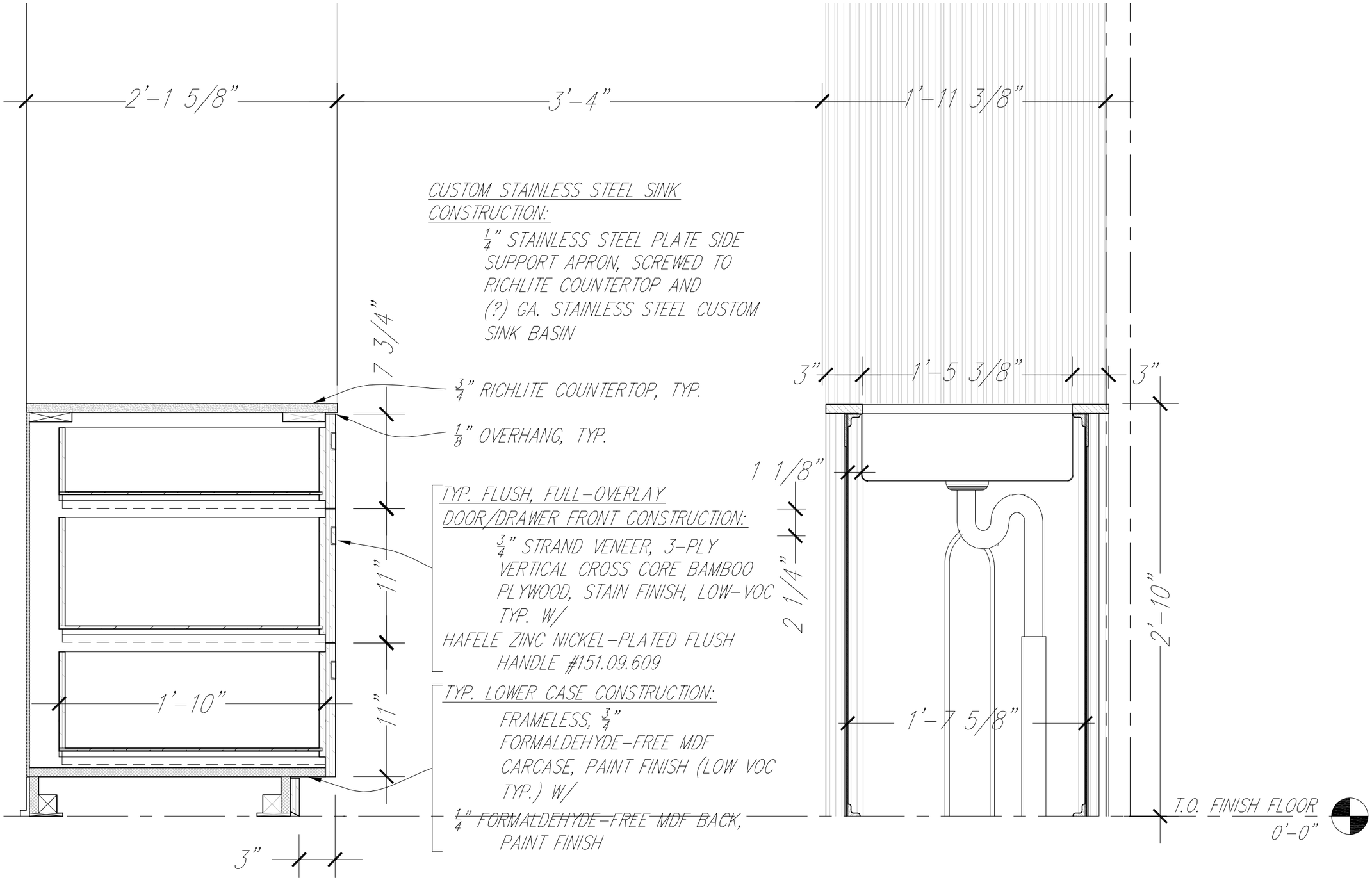

1 KITCHEN SECTION DETAILS F-F
1 1/2"" = 1'-0"

Drawn by	Date
A.Rude	August 7, 2007
Revised	Date

2007 Solar Decathlon

University of Colorado at Boulder
Civil, Environmental, and Architectural Engineering
428 UCB, Room ECCE 441
Boulder, CO 80309-0428

Kitchen Cabinet Section F-F

0 3" 6" 1' 2'

A6.06

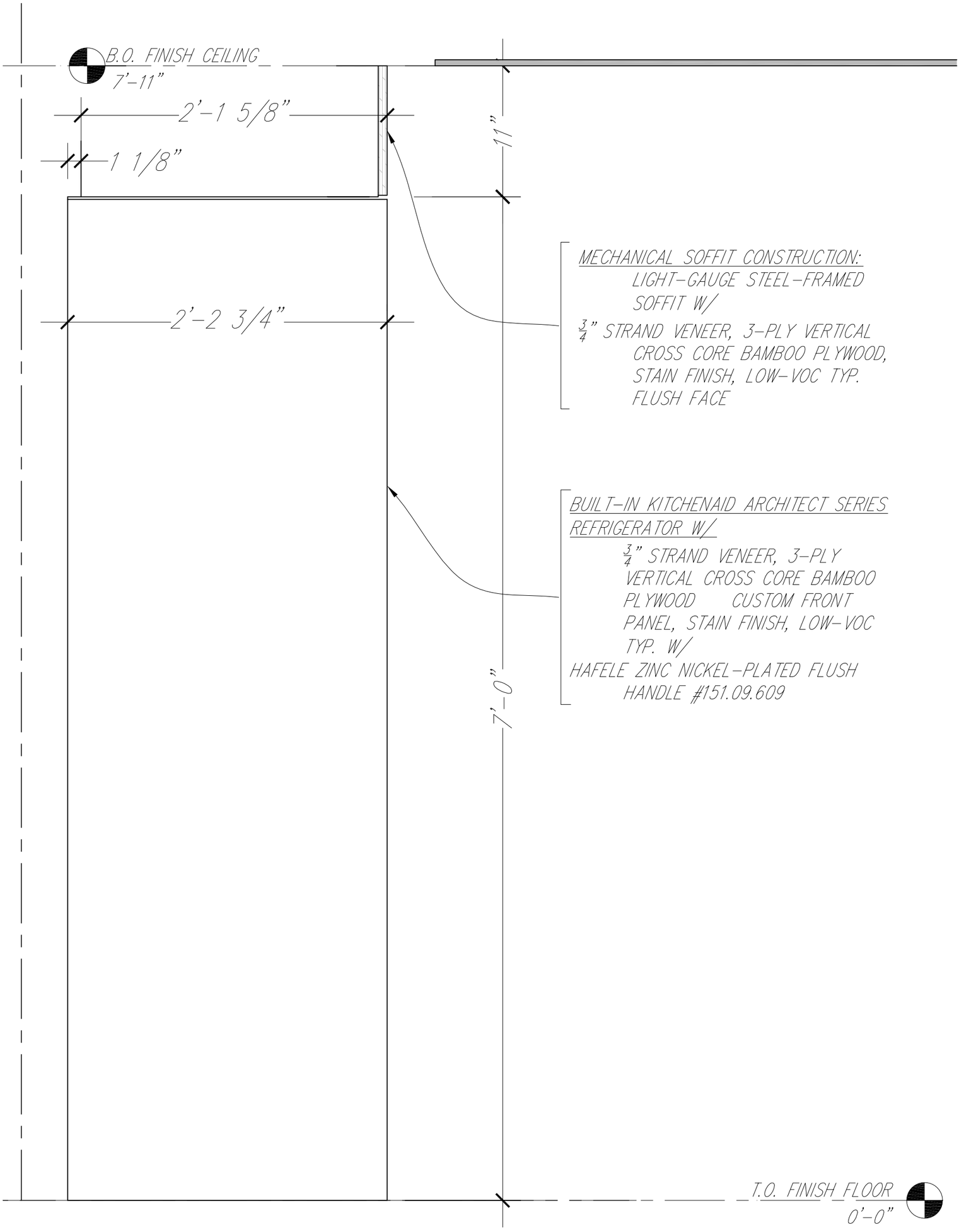

1 KITCHEN SECTION G-G
1 1/2" = 1'-0"

A6.07

Kitchen Cabinet Section G-G

0 3" 6" 1' 2'

2007 Solar Decathlon

University of Colorado at Boulder
Civil, Environmental, and Architectural Engineering
428 UCB, Room ECCE 441
Boulder, CO 80309-0428

Drawn by	Date
A.Rude	August 7, 2007
Revised	Date

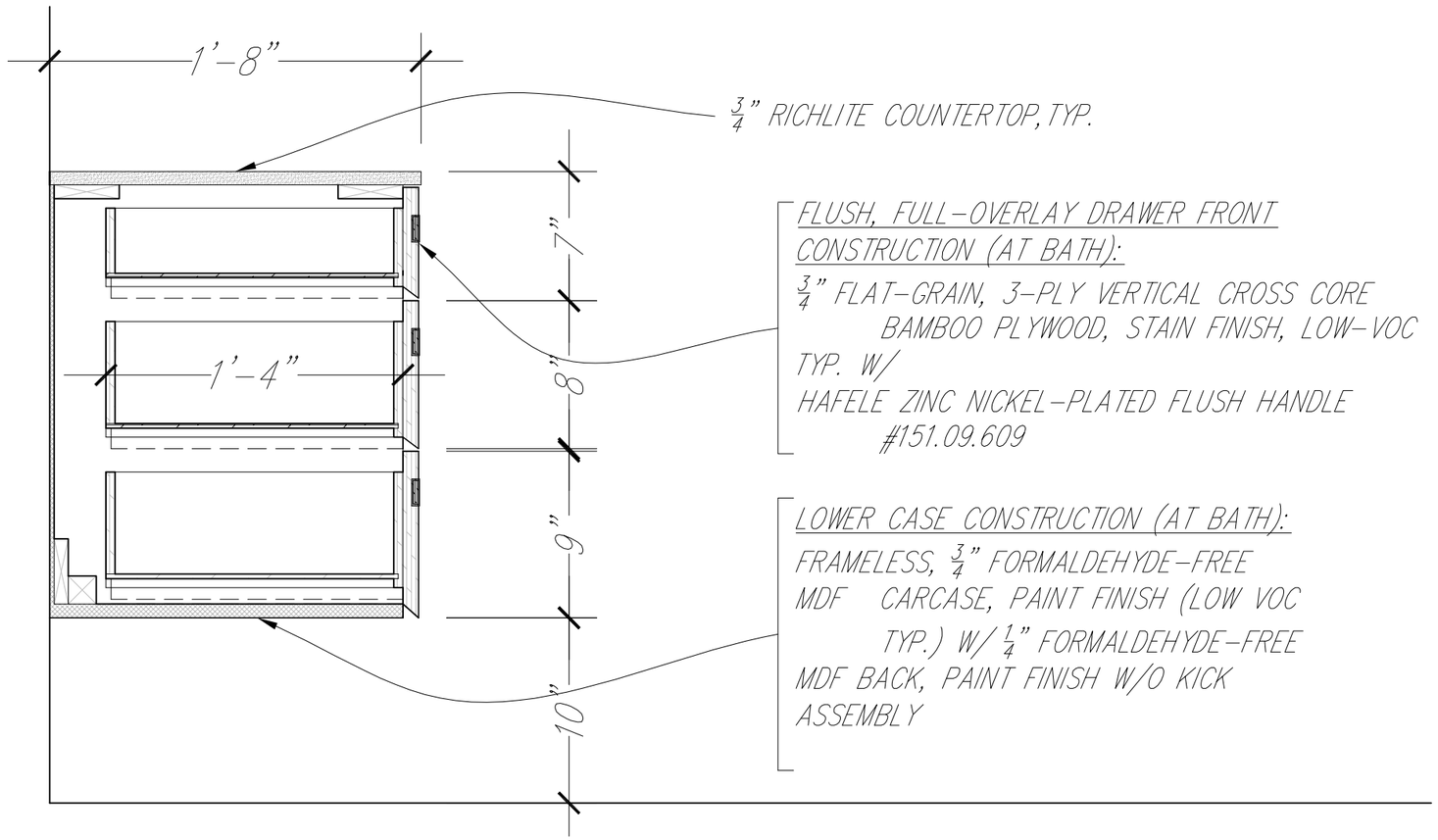

1 BATH SECTION H-H
1 1/2" = 1'-0"

Drawn by	Date
A.Rude	August 7, 2007
Revised	Date

2007 Solar Decathlon

University of Colorado at Boulder
Civil, Environmental, and Architectural Engineering
428 UCB, Room ECCE 441
Boulder, CO 80309-0428

Kitchen Cabinet Section H-H

0 3" 6" 1' 2'

A6.08

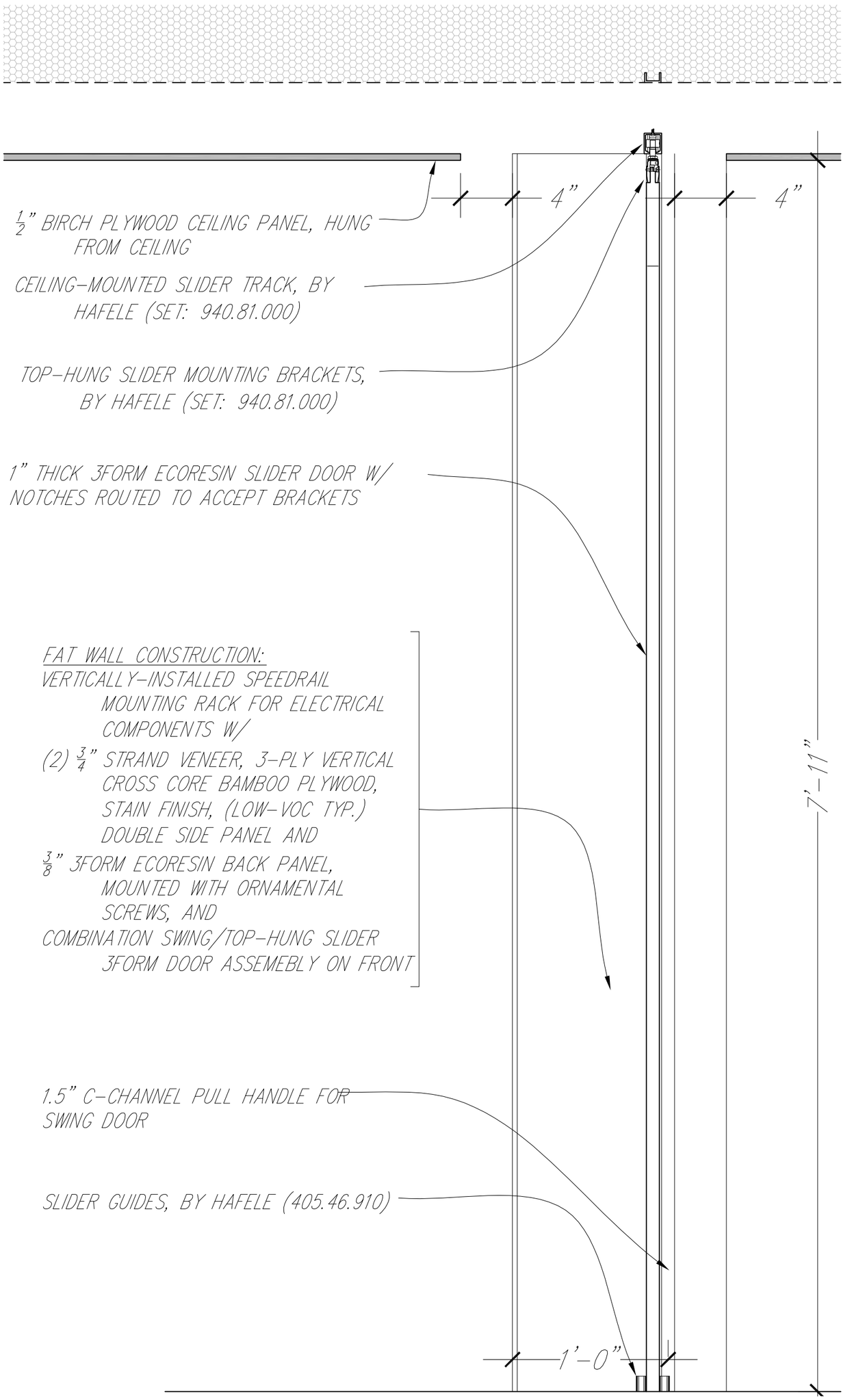

1 FAT WALL SECTION AT DOOR
1 1/2" = 1'-0"

A6.09

Fat Wall Section

0 3" 6" 1' 2'

2007 Solar Decathlon

University of Colorado at Boulder

Civil, Environmental, and Architectural Engineering
428 UCB, Room ECCE 441
Boulder, CO 80309-0428

Drawn by	Date
A.Rude	August 7, 2007
Revised	Date

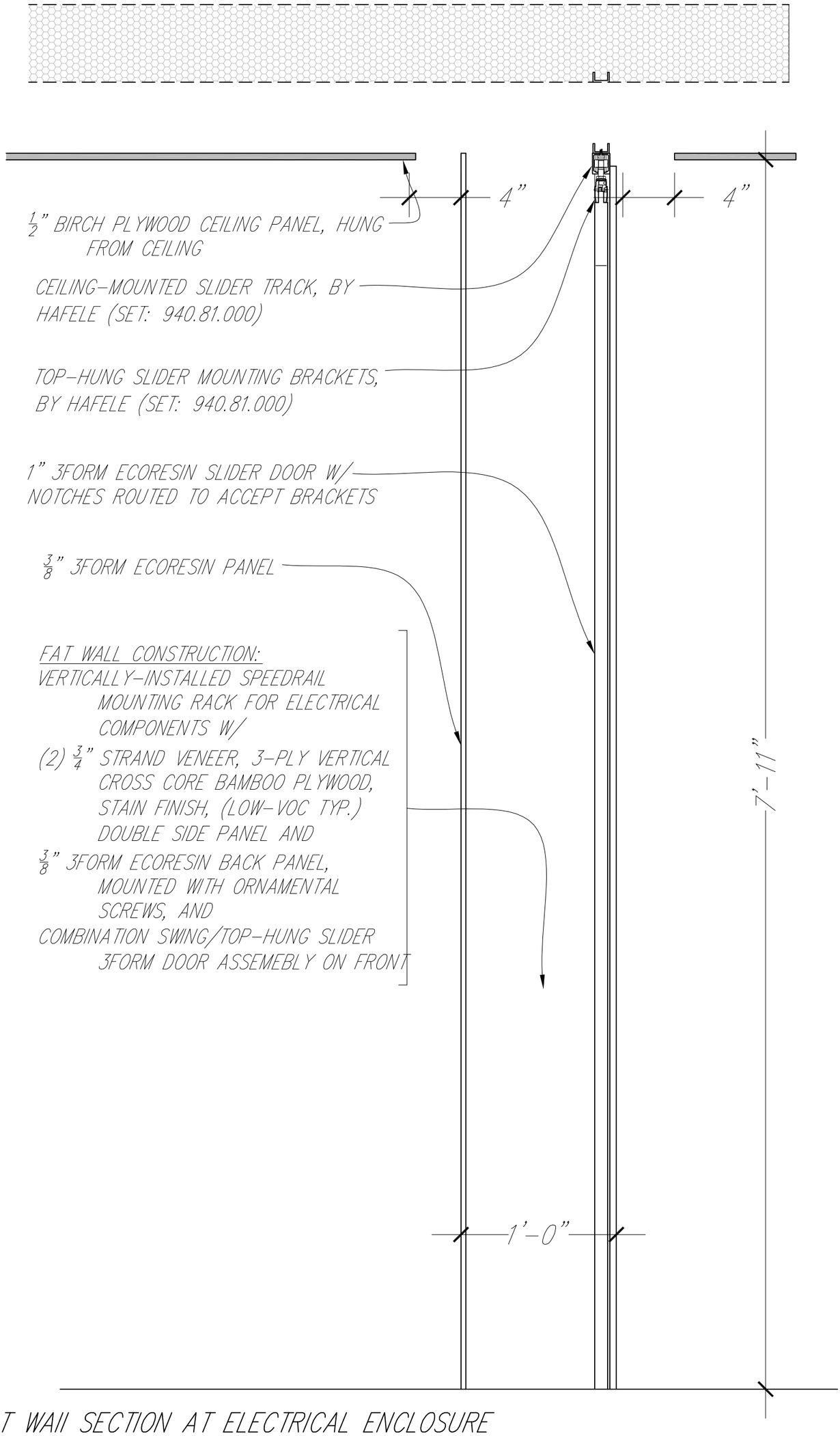

1 FAT WALL SECTION AT ELECTRICAL ENCLOSURE
1 1/2" = 1'-0"

A6.10

Fat Wall Section

0 3" 6" 1' 2'

2007 Solar Decathlon

University of Colorado at Boulder

Civil, Environmental, and Architectural Engineering
428 UCB, Room ECCE 441
Boulder, CO 80309-0428

Drawn by	Date
A.Rude	August 7, 2007
Revised	Date

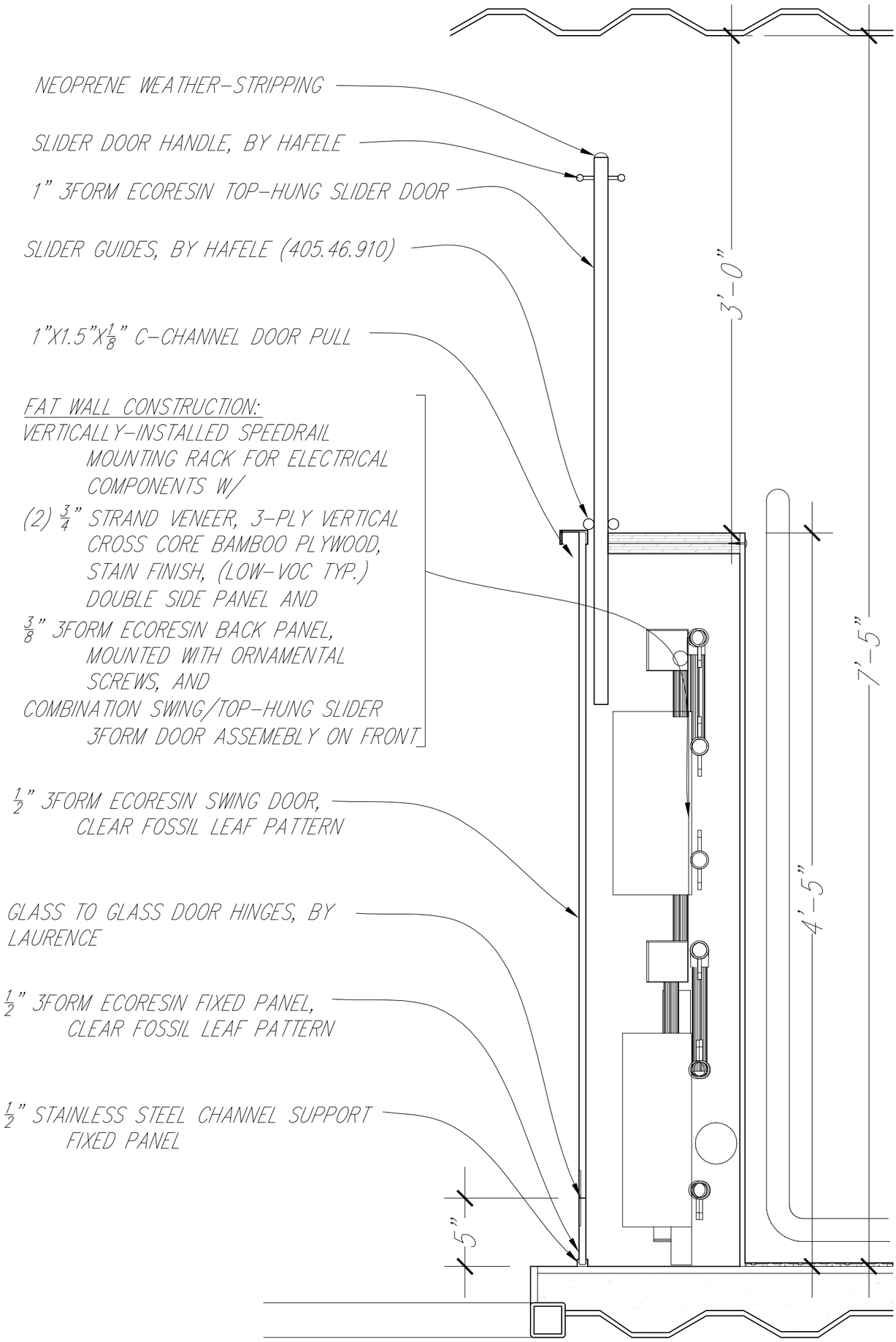

1 FAT WALL PLAN DETAIL
1 1/2" = 1'-0"

A6.11

Fat Wall Plan Detail

0 3" 6" 1' 2'

2007 Solar Decathlon

University of Colorado at Boulder

Civil, Environmental, and Architectural Engineering
428 UCB, Room ECCE 441
Boulder, CO 80309-0428

Drawn by	Date
A.Rude	August 7, 2007
Revised	Date

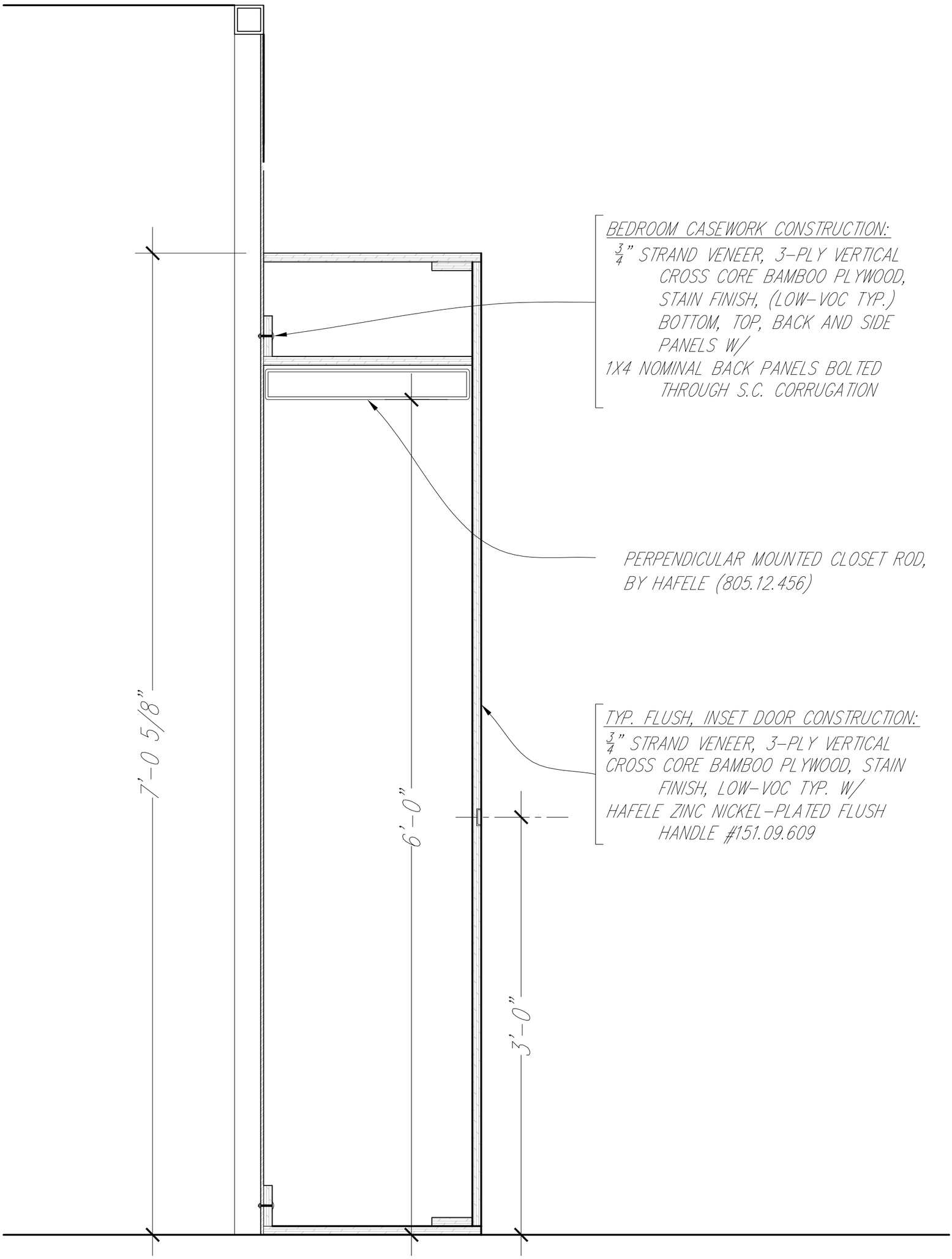

1 BEDROOM SECTION THROUGH CLOSET
1 1/2" = 1'-0"

A6.12

Bedroom Closet Section

0 3" 6" 1' 2'

2007 Solar Decathlon

University of Colorado at Boulder
Civil, Environmental, and Architectural Engineering
428 UCB, Room ECCE 441
Boulder, CO 80309-0428

Drawn by	Date
A.Rude	August 7, 2007
Revised	Date

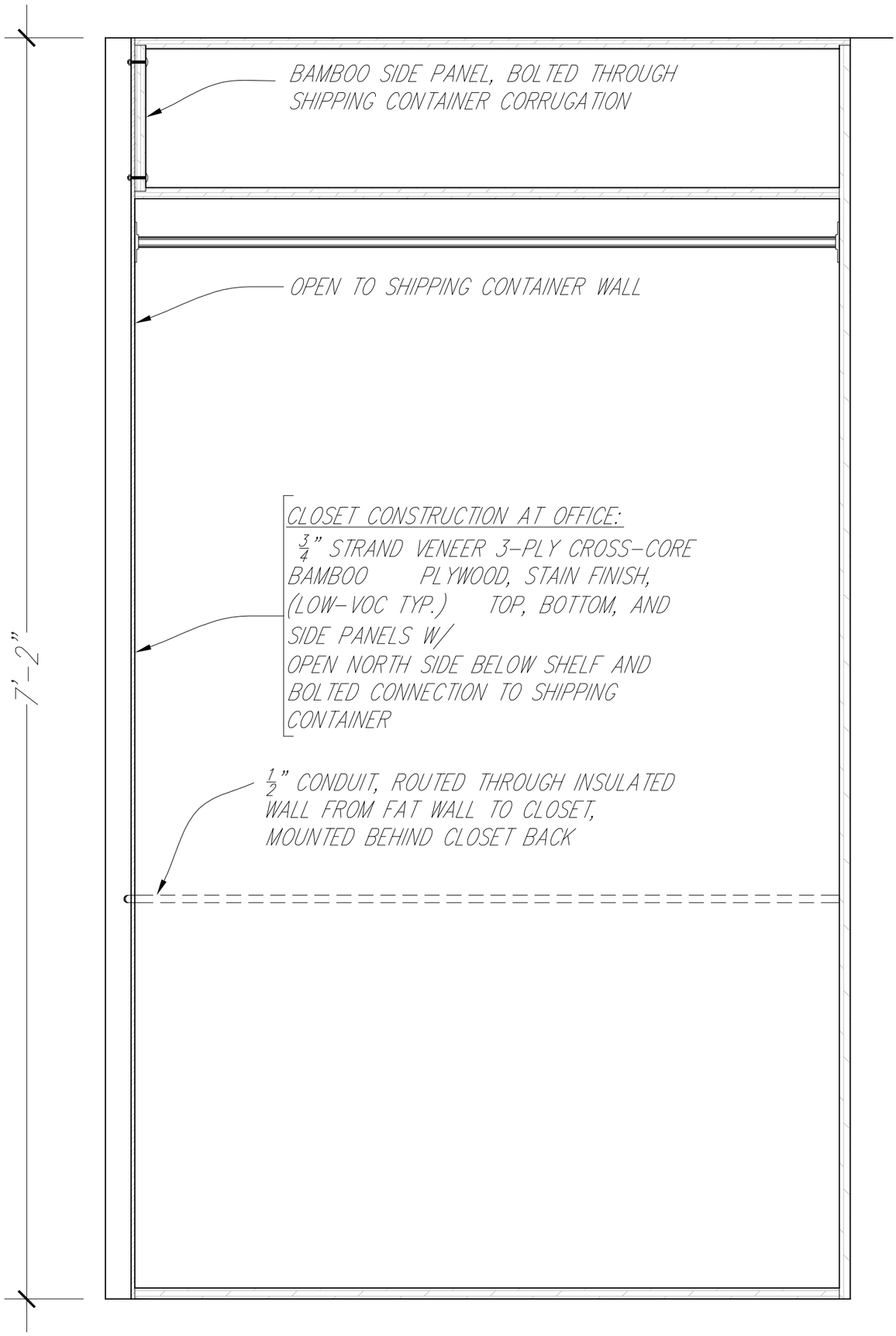

1 SECTION THROUGH S.C. WALL

1 1/2" = 1'-0"

A6.13

Office Closet Section

0 3" 6" 1' 2'

2007 Solar Decathlon

University of Colorado at Boulder

Civil, Environmental, and Architectural Engineering
428 UCB, Room ECCE 441
Boulder, CO 80309-0428

Drawn by	Date
A.Rude	August 7, 2007
Revised	Date

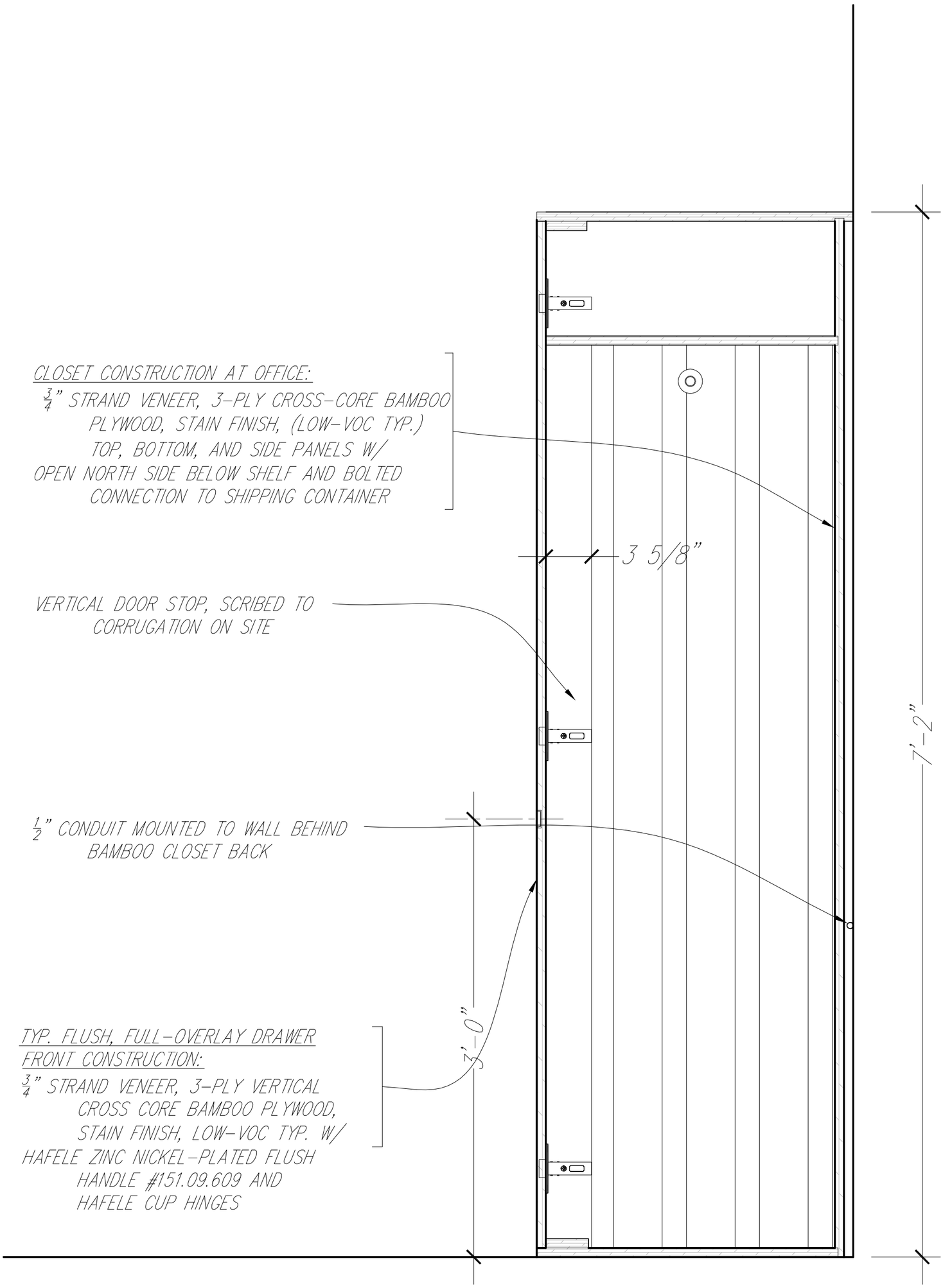

1 SECTION AT CLOSET

1 1/2" = 1'-0"

A6.14

Office Closet Section

0 3" 6" 1' 2'

2007 Solar Decathlon

University of Colorado at Boulder

Civil, Environmental, and Architectural Engineering
428 UCB, Room ECCE 441
Boulder, CO 80309-0428

Drawn by	Date
A.Rude	August 7, 2007
Revised	Date

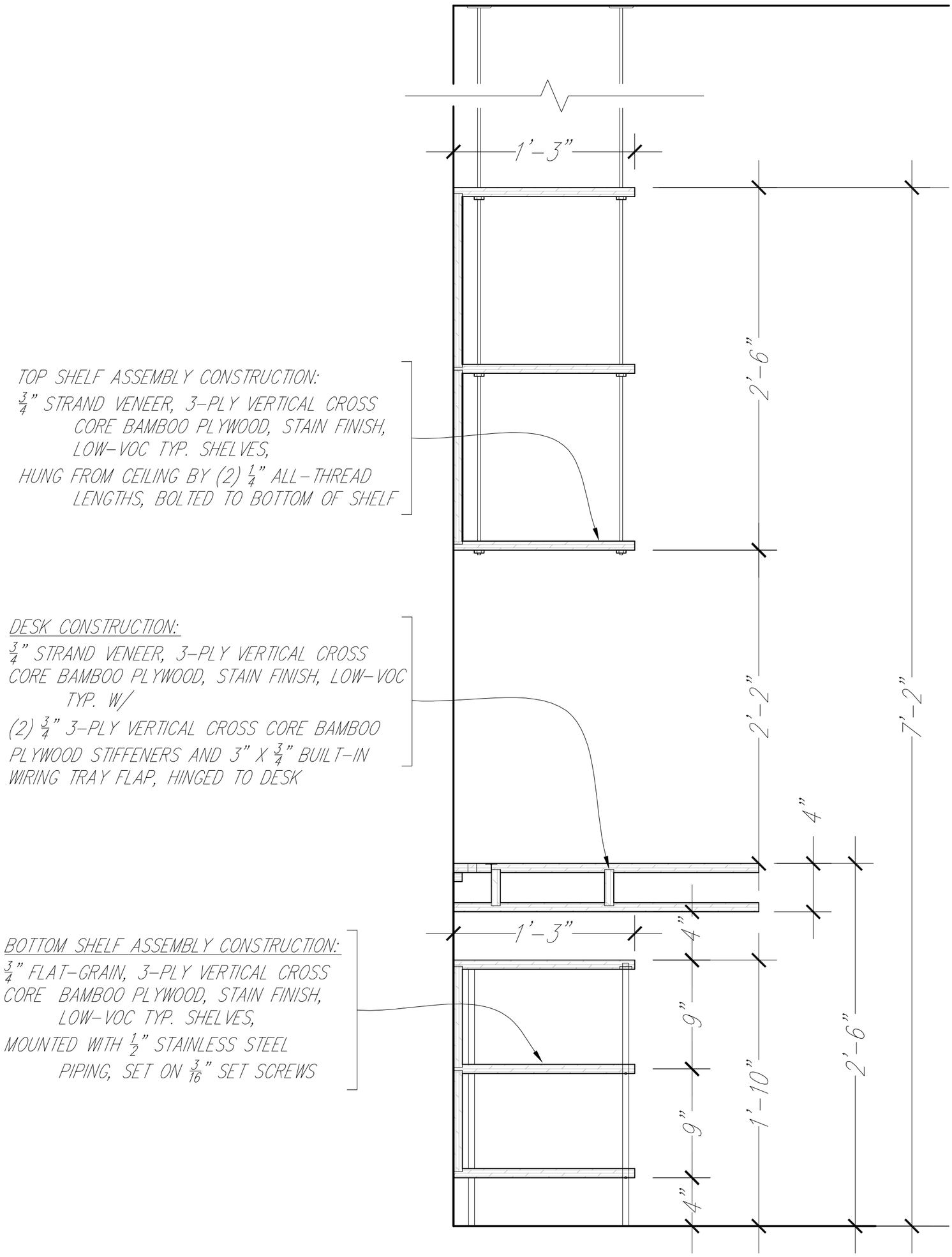

1 SECTION AT OFFICE DESK

1 1/2" = 1'-0"

A6.15

Office Section at Desk

0 3" 6" 1' 2'

2007 Solar Decathlon

University of Colorado at Boulder

Civil, Environmental, and Architectural Engineering
428 UCB, Room ECCE 441
Boulder, CO 80309-0428

Drawn by	Date
A.Rude	August 7, 2007
Revised	Date

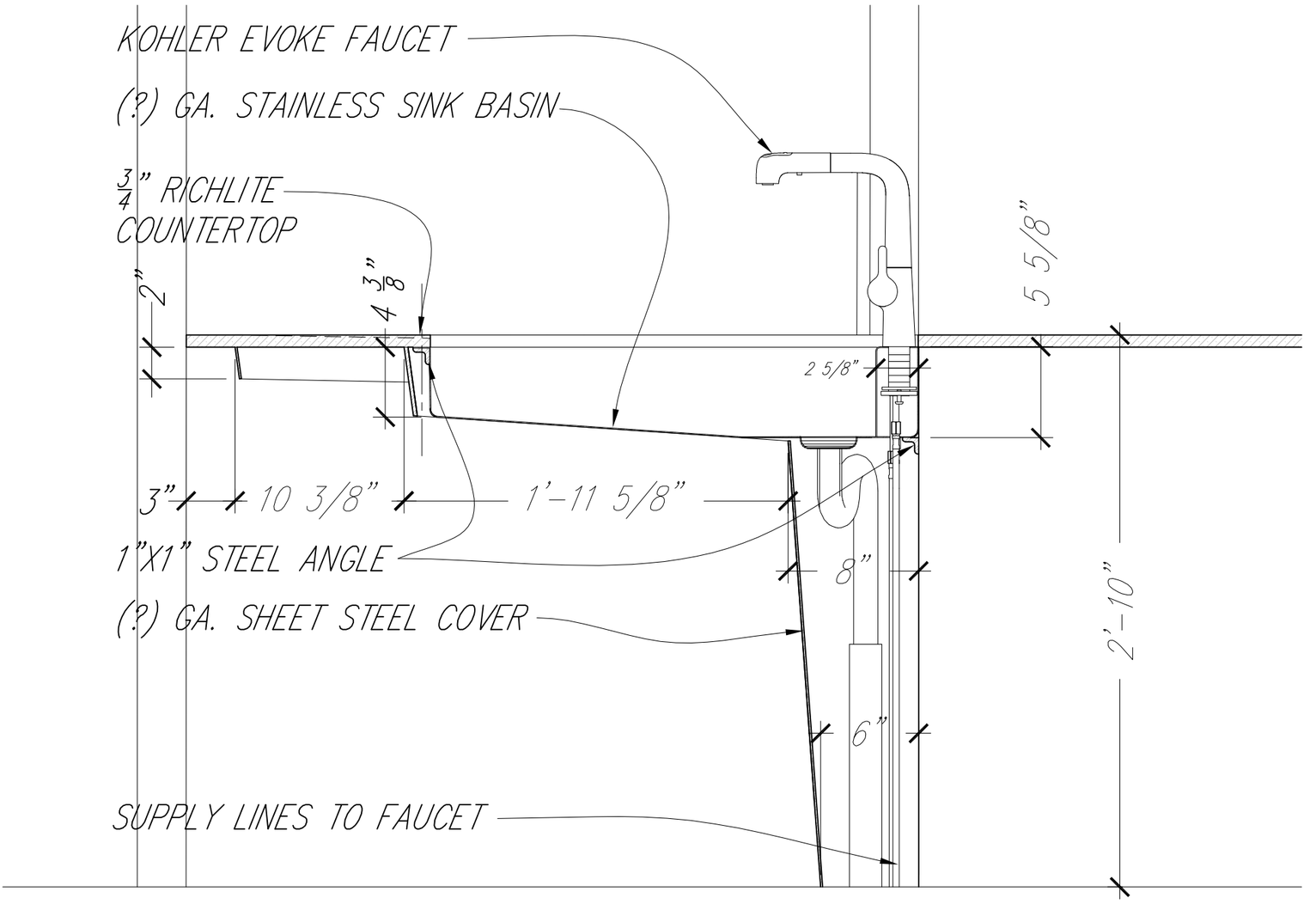

1 LONGITUDINAL SINK SECTION

1 1/2" = 1'-0"

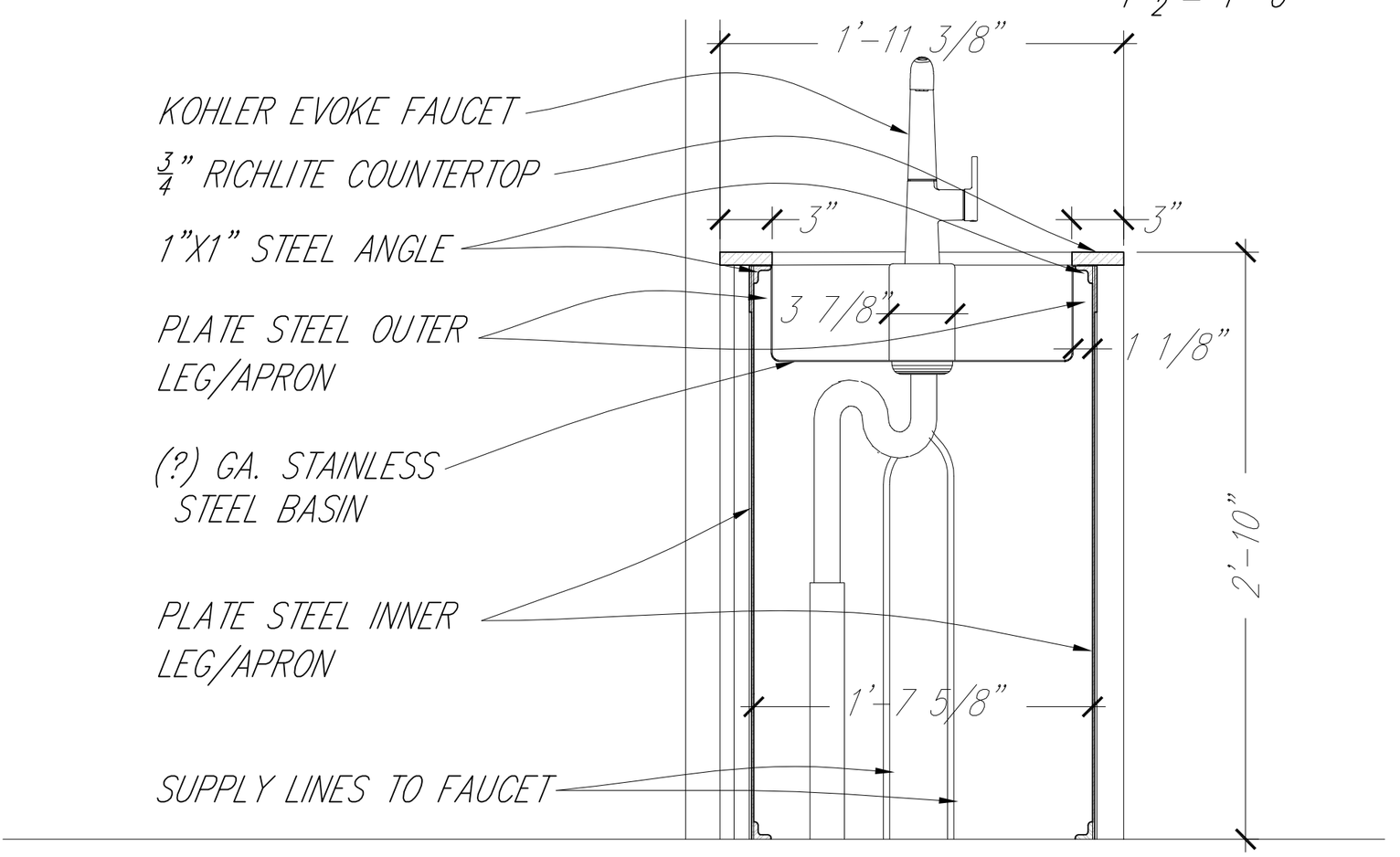

1 TRANSVERSE SINK SECTION

1 1/2" = 1'-0"

A6.16

Sink Sections

0 3" 6" 1' 2'

2007 Solar Decathlon

University of Colorado at Boulder

Civil, Environmental, and Architectural Engineering
428 UCB, Room ECCE 441
Boulder, CO 80309-0428

Drawn by	Date
A.Rude	August 7, 2007
Revised	Date

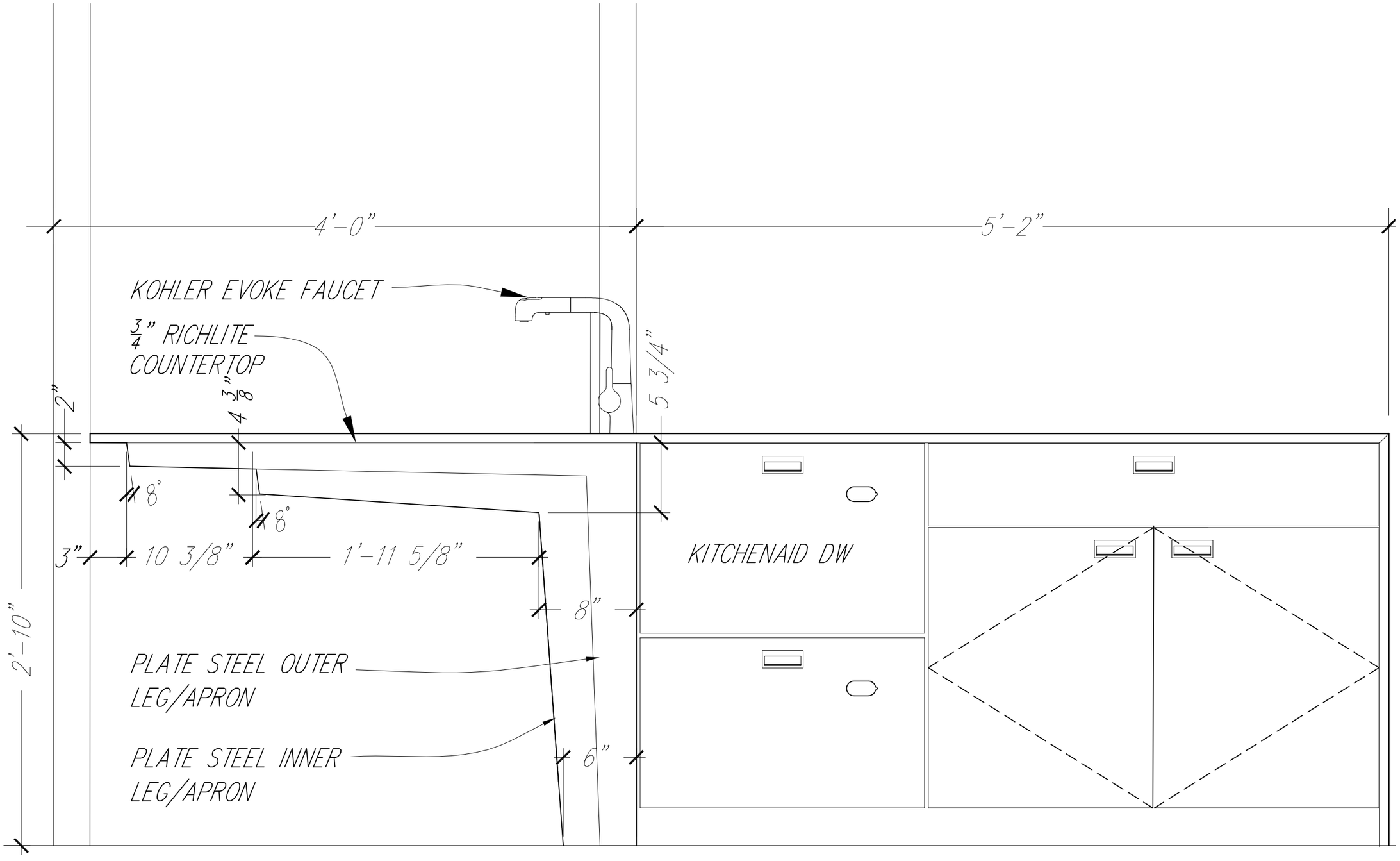

1 SINK ELEVATION DETAIL

1 1/2" = 1'-0"

Drawn by	Date
A.Rude	August 7, 2007
Revised	Date

2007 Solar Decathlon

University of Colorado at Boulder
Civil, Environmental, and Architectural Engineering
428 UCB, Room ECCE 441
Boulder, CO 80309-0428

Sink Elevation Detail

0 3" 6" 1' 2'

A6.17

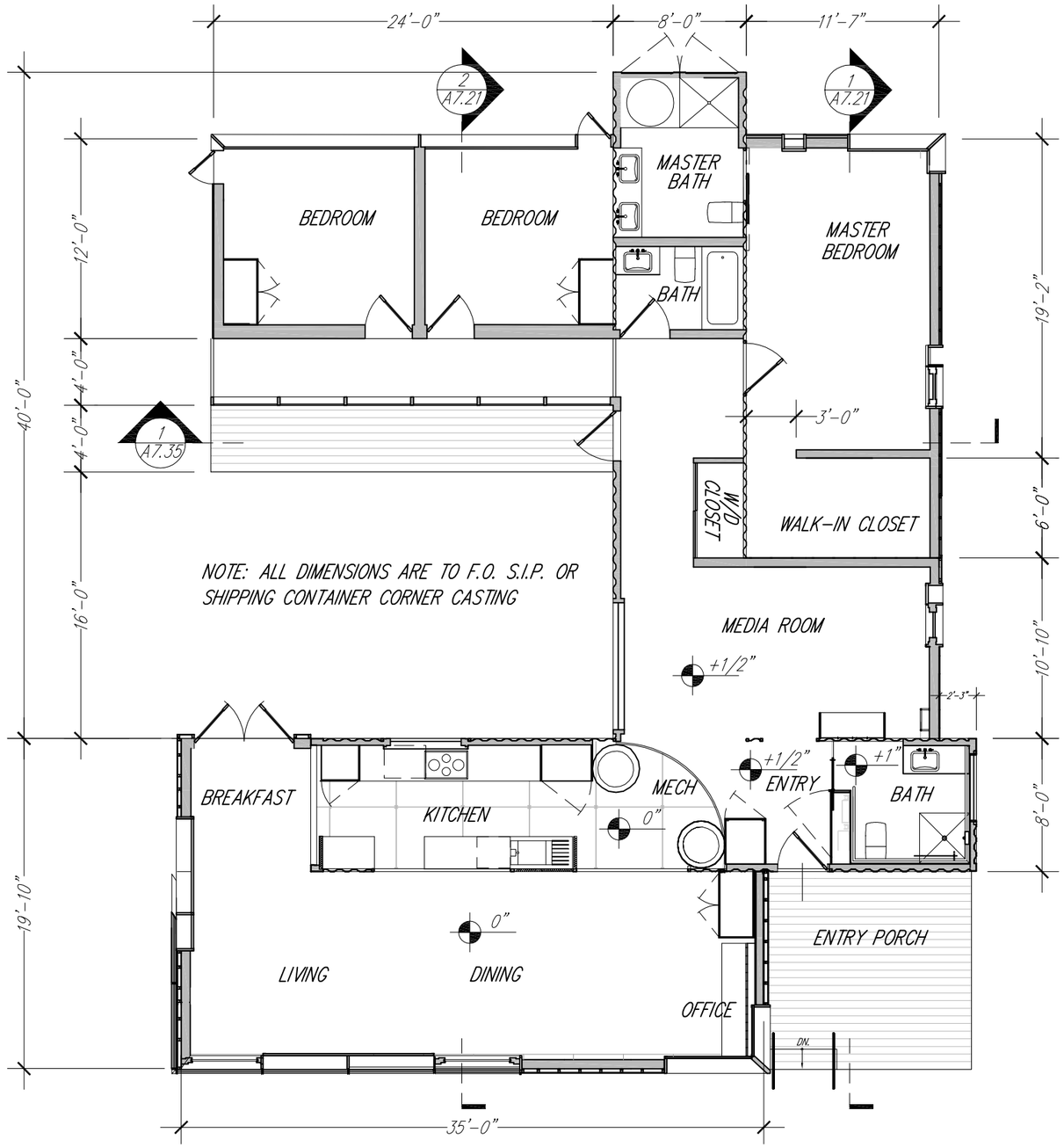

1 COMPLETE HOUSE GROUND LEVEL FLOOR PLAN

1/8" = 1'-0"

Drawn by	Date
A.Rude	August 7, 2007
Revised	Date

2007 Solar Decathlon

University of Colorado at Boulder
Civil, Environmental, and Architectural Engineering
428 UCB, Room ECCE 441
Boulder, CO 80309-0428

Complete House Floor Plan

0 2' 4' 8' 16'

A7.01

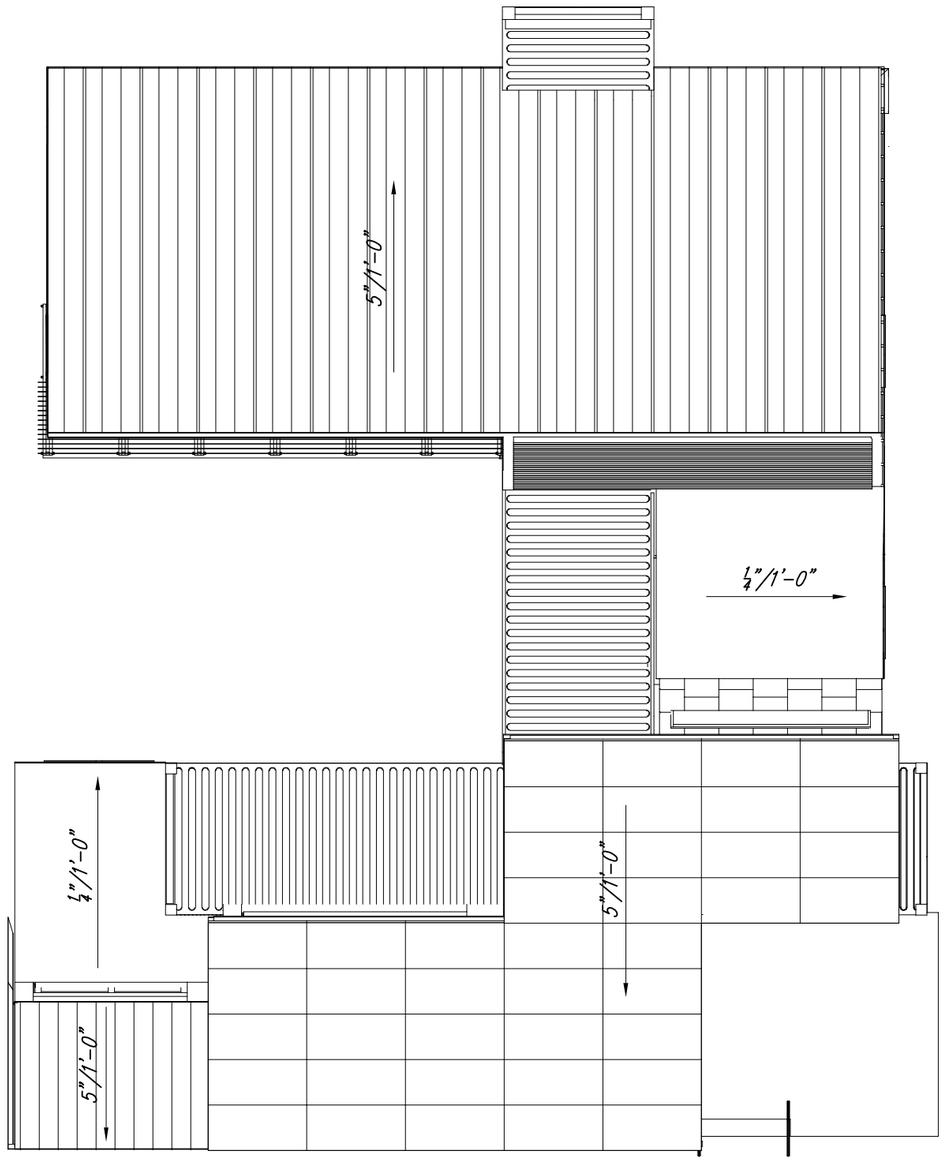

1 COMPLETE HOUSE ROOF PLAN

1/8" = 1'-0"

Drawn by	Date
A.Rude	August 7, 2007
Revised	Date

2007 Solar Decathlon

University of Colorado at Boulder
Civil, Environmental, and Architectural Engineering
428 UCB, Room ECCE 441
Boulder, CO 80309-0428

Complete House Roof Plan

0 1' 2' 4' 8'

A7.02

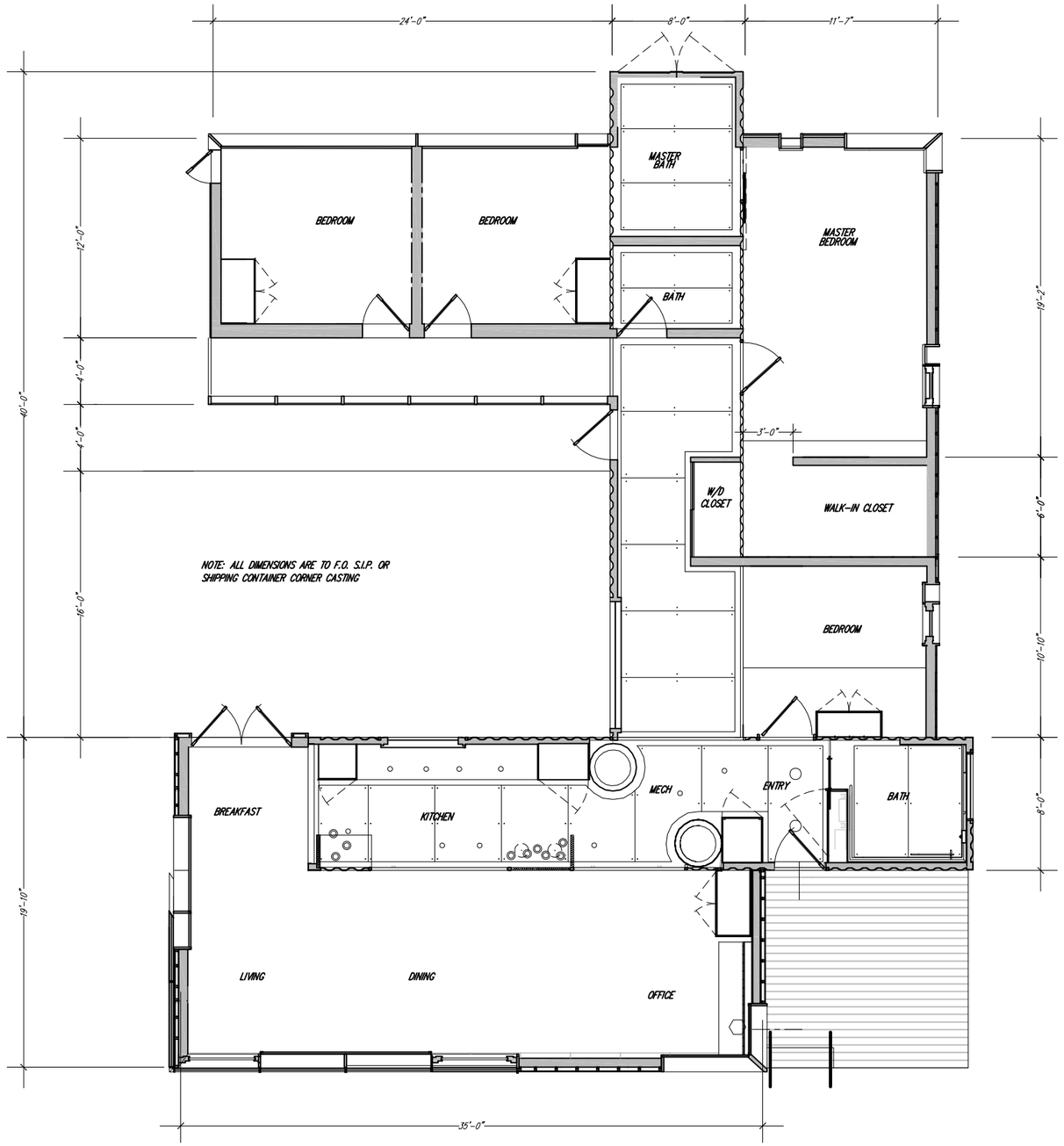

1 REFLECTED CEILING PLAN
1/8" = 1'-0"

Drawn by	Date
A.Rude	August 7, 2007
Revised	Date

2007 Solar Decathlon

University of Colorado at Boulder
Civil, Environmental, and Architectural Engineering
428 UCB, Room ECCE 441
Boulder, CO 80309-0428

Reflected Ceiling Plan

0 2' 4' 8' 16'

A7.11

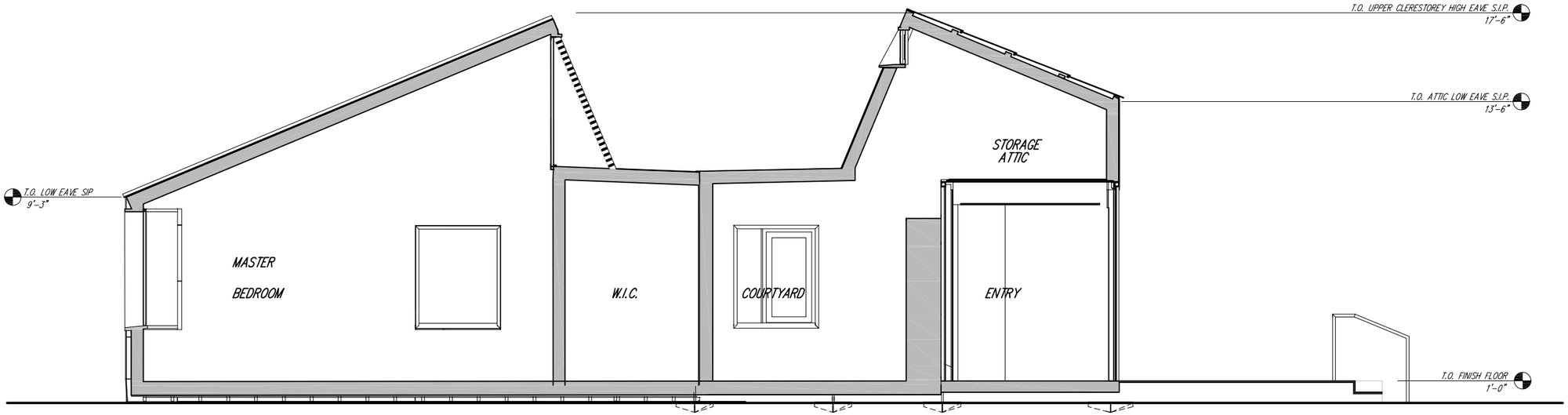

1 TRANSVERSE BUILDING SECTION AT MASTER BEDROOM

1/8" = 1'-0"

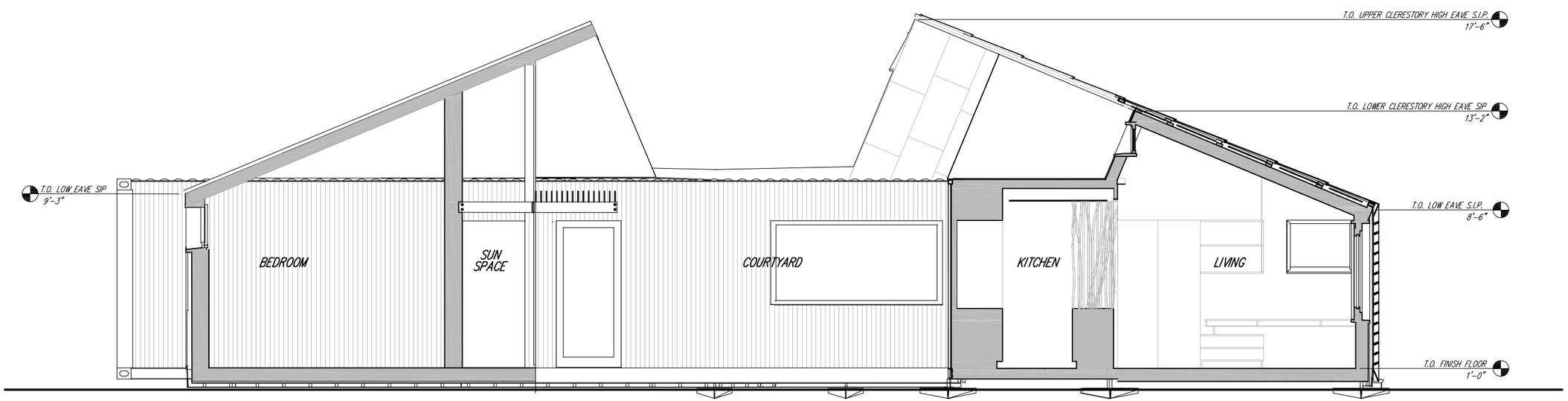

2 TRANSVERSE BUILDING SECTION AT COURTYARD

1/8" = 1'-0"

Drawn by	Date
A.Rude	August 7, 2007
Revised	Date

2007 Solar Decathlon

University of Colorado at Boulder

Civil, Environmental, and Architectural Engineering
428 UCB, Room ECCE 441
Boulder, CO 80309-0428

Transverse Building Sections

0 1' 2' 4' 8'

A7.21

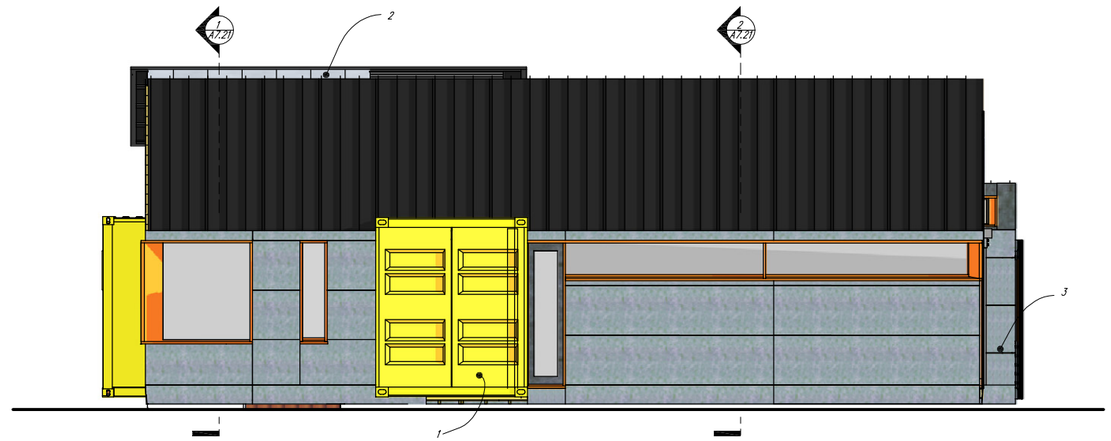

1. CORTEN CORRUGATED STEEL, PAINT FINISH
2. GA. STAINLESS STEEL SHINGLES, FLAT SEAM, TYP.
3. HARDIBOARD CEMENTITIOUS FIBERBOARD
4. PERFORATED SHEET STEEL

1 NORTH EXTERIOR ELEVATION

1/8" = 1'-0"

1. CORTEN CORRUGATED STEEL, PAINT FINISH
2. GA. STAINLESS STEEL SHINGLES, FLAT SEAM, TYP.
3. HARDIBOARD CEMENTITIOUS FIBERBOARD
4. PERFORATED SHEET STEEL

1 SOUTH EXTERIOR ELEVATION

1/8" = 1'-0"

Drawn by	Date
S. Hauze	August 7, 2007
Revised	Date

2007 Solar Decathlon

University of Colorado at Boulder
Civil, Environmental, and Architectural Engineering
428 UCB, Room ECCE 441
Boulder, CO 80309-0428

Exterior Elevations

0 2' 4' 8' 16'

A7.31

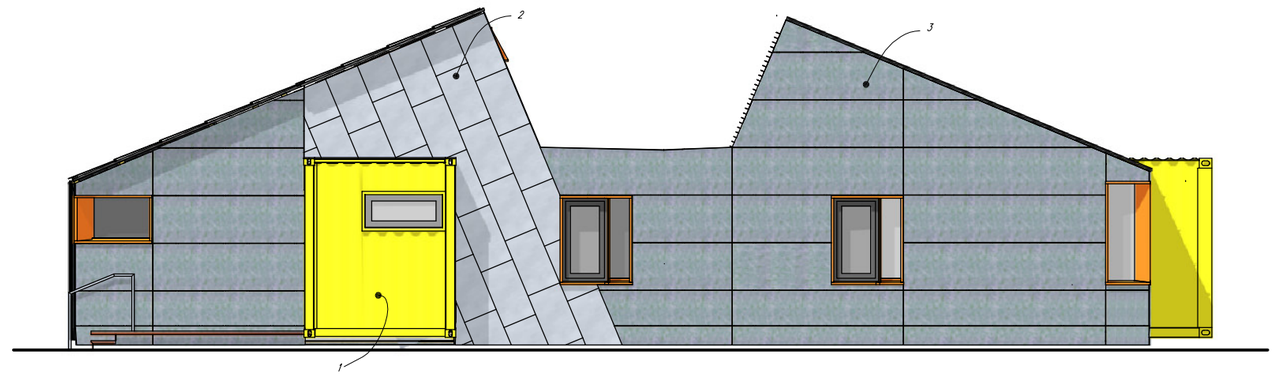

1. CORTEN CORRUGATED STEEL, PAINT FINISH
2. GA. STAINLESS STEEL SHINGLES, FLAT SEAM, TYP.
3. HARDIBOARD CEMENTITIOUS FIBERBOARD
4. PERFORATED SHEET STEEL

1 EAST EXTERIOR ELEVATION

1/8" = 1'-0"

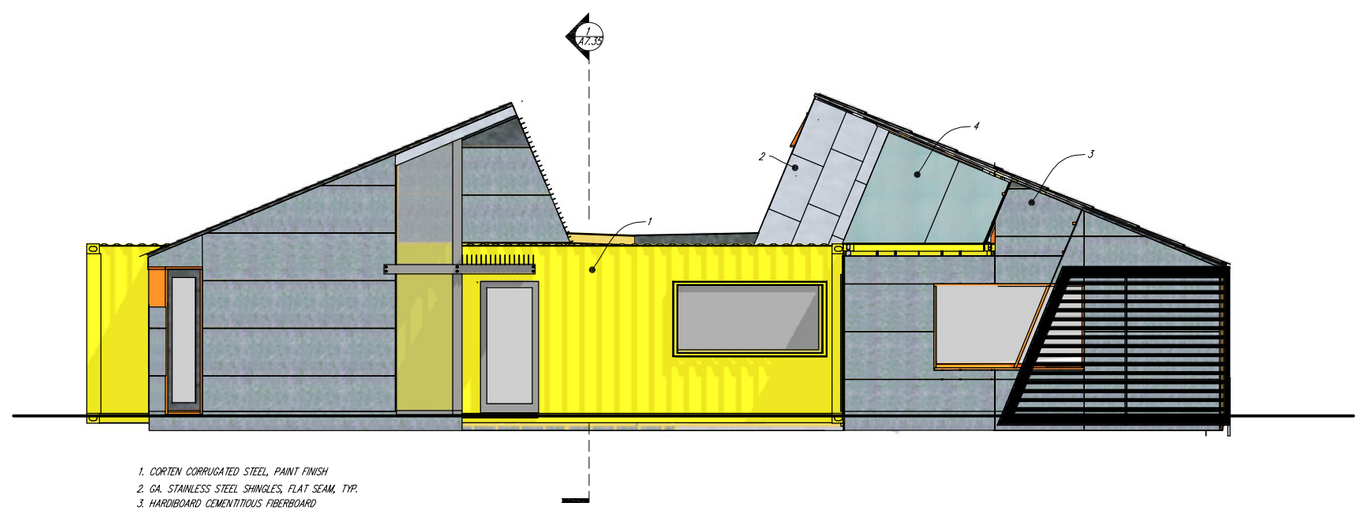

1. CORTEN CORRUGATED STEEL, PAINT FINISH
2. GA. STAINLESS STEEL SHINGLES, FLAT SEAM, TYP.
3. HARDIBOARD CEMENTITIOUS FIBERBOARD
4. PERFORATED SHEET STEEL

1 WEST EXTERIOR ELEVATION

1/8" = 1'-0"

Drawn by	Date
S. Hauze	August 7, 2007
Revised	Date

2007 Solar Decathlon

University of Colorado at Boulder
Civil, Environmental, and Architectural Engineering
428 UCB, Room ECCE 441
Boulder, CO 80309-0428

Exterior Elevations

0 1' 2' 4' 8'

A7.32

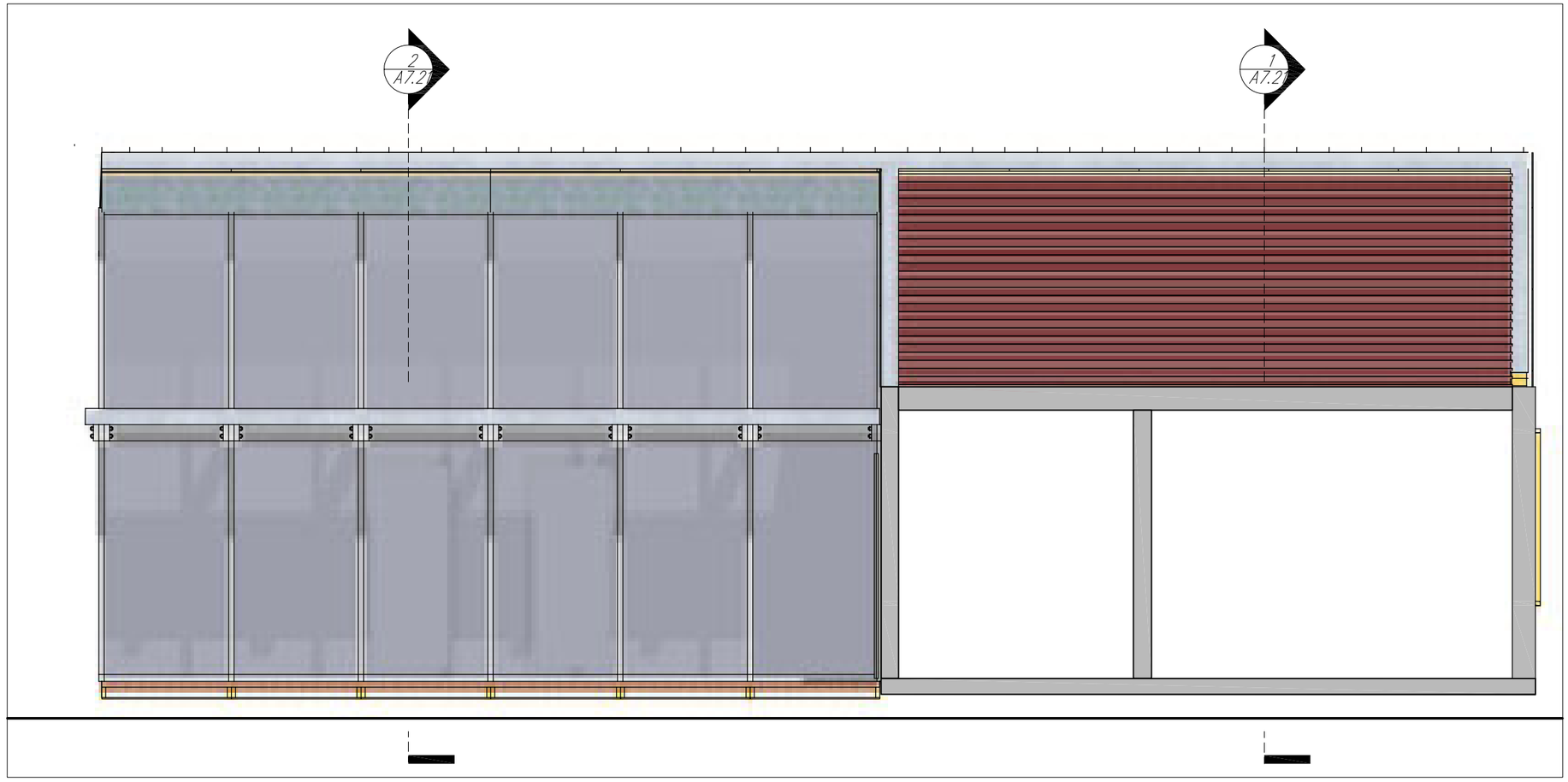

1 SOUTH EXTERIOR ELEVATION

1/8" = 1'-0"

Drawn by	Date
S. Hauze	August 7, 2007
Revised	Date

2007 Solar Decathlon

University of Colorado at Boulder

Civil, Environmental, and Architectural Engineering
428 UCB, Room ECCE 441
Boulder, CO 80309-0428

Exterior Elevations

0 1' 2' 4' 8'

A7.33

Window	Type	Notes	Grids	Quantity	Frame Width"	Frame Height"	Unit SF	Total SF
1	Single Inswing Door	South, hinged right	No	1	36	80	20.0	20.0
2	Single Awning Window	East	No	1	48	20	6.7	6.7
3	Double Casement Window	North	No	1	60	36	15.0	15.0
4	Insulated Glass Unit/No Frame 1 1/2" oa	Trapezoid	No	1	B: 51 1/2 LL: 42 1/2 RL: 21		14.9	14.9
5	Single Inswing Door/no lite/full slab, SSD1	West, hinged right	No	1	36	80	20.0	20.0
6	Insulated Glass Unit/No Frame 1 1/2" oa	South	No	1	44 3/8	55 5/8	17.1	17.1
7	Tilt and Turn	hinged left	No	1	59 3/8	53 1/2	22.1	22.1
8	Single Awning Window	South	No	3	41	17	4.8	14.5
9	Insulated Glass Unit/No Frame 1 1/2" oa	South	No	1	63 5/8	26 1/8	11.5	11.5
10	Insulated Glass Unit/No Frame 1 1/2" oa	South	No	1	36 5/8	26 1/8	6.6	6.6
11	Single Casement	hinge left	No	1	28	48	9.3	9.3
12	Insulated Glass Unit/No Frame 1 1/2" oa	East	No	1	15 1/2	50	5.4	5.4
13	Awning/PW/Awning		No	1	123	17	14.5	14.5
14	Single Inswing Door	North, hinged left	No	1	36	80	20.0	20.0
Note: All door and window handing is from outside view.				16				177.7

1 WINDOW/DOOR SCHEDULE
N.T.S.

Drawn by C.Corbin
Date August 7, 2007
Revised
Date

2007 Solar Decathlon

University of Colorado at Boulder
Civil, Environmental, and Architectural Engineering
428 UCB, Room ECCE 441
Boulder, CO 80309-0428

Window/Door Schedule

A8.01

FIXTURE TYPE	MANUFACTURER	FIXTURE NAME	ITEM #	QUANTITY	LOCATION	COLOR	FINISH	NOTES
Toilet	Kohler	Escale Dual Flush Toilet	K-19796	1	All Bathrooms	White		Installed On 1" Corrian Pedestal
Toilet Supply Elbow	Kohler	Angle Supply Elbow	K-7637	1	All Bathrooms		Polished Chrome	
Lavatory Faucet	Kohler	Stillness Widespread Lavatory Faucet	K-14410-4	1	All Bathrooms			W/ Aerator
Lavatory Sink	Kohler	Ladena Undermount Lavatory Sink 18x12	K-2214-G	1	All Bathrooms	White		
Shower Valve Trim	Kohler	Stillness Thermostatic Valve Trim W/ Lever Handle	K-T10940-4	1	All Bathrooms		Polished Chrome	Install On Valve Housing Front Panel
Thermostatic Shower Valve	Kohler	Rite-Temp Shower Valve	K-304-NA	1	All Bathrooms		N/A	Installed Inside Valve Housing
Shower Slidebar	Kohler	Mastershower Slidebar Kit	K-8516	1	All Bathrooms		Polished Chrome	Install On Valve Housing Front Panel
Shower Spray	Kohler	Ecoshower Handheld Spray	K-8543	1	All Bathrooms		Polished Chrome	
Shower Wall Supply	Kohler	Mastershower Wall Supply Elbow	K-9513	1	All Bathrooms		Polished Chrome	Install On Valve Housing Front Panel
Kitchen Faucet	Kohler	Evoke Kitchen Faucet	K-7637	1	Kitchen South Side		Vibrant Stainless	

1 PLUMBING FIXTURE SCHEDULE

Drawn by S.R.H.
Date August 7, 2007
Revised
Date

2007 Solar Decathlon

University of Colorado at Boulder
Civil, Environmental, and Architectural Engineering
428 UCB, Room ECOE 441
Boulder, CO 80309-0428

Plumbing Fixture Schedule

A8.02

APPLIANCE TYPE	MANUFACTURER	APPLIANCE NAME	ITEM #	QUANTITY	LOCATION	FINISH	COLOR	NOTES
Refrigerator	KitchenAid	Refrigerator ,Architect II Series, 36"	KBRC36FTS	1	Kitchen North Side	Bamboo Strand		Custom Finish Panel– Plyboo 3/4" Dark Strand. Unit Recessed into Insulation 1–1/8"
Dishwasher	KitchenAid	Double Drawer Dishwasher	KUDD01D	1	Kitchen South Side	Bamboo Strand		Custom Finish Panel– Plyboo 3/4" Dark Strand. Control Medalions Req'd
Dishwasher Control	KitchenAid	Drawer Dishwasher Control Medalions	KUDKBZSPA	2	Kitchen South Side	Stainless Steel		
Microwave/ Oven	GE Monogram	Convection Microwave/ Oven	ZET3038SH	1	Kitchen North Side	Stainless Steel		
Cooktop	Diva De Provence	4 Burner 30"	DDP–4	1	Kitchen North Side		Black	
Washer/ Dryer	Asko	Combination Washer/ Dryer	WCAM1812	1	Kitchen North Side		White	

1 APPLIANCE SCHEDULE

Drawn by S.R.H.
Date August 7, 2007
Revised
Date

2007 Solar Decathlon

University of Colorado at Boulder
Civil, Environmental, and Architectural Engineering
428 UCB, Room ECCE 441
Boulder, CO 80309-0428

Appliance Schedule

A8.03

ITEM NAME	ITEM #	QUANTITY	LOCATION	NOTES
Zinc nickel-plated Matt Flush Pulls	151.09.609	28	All Drawer/Door/DW Fronts	
Accuride C3132SC, 22"	420.02.956	9	Kitchen North Side Drawers	Full Extension, Self-Close
Accuride C3132SC, 20"	420.02.951	4	Kitchen South Side Drawers	Full Extension, Self-Close
Accuride C3132SC, 16"	420.02.941	3	Bath Cabinet Drawers	Full Extension, Self-Close
Concealed Hinges A-Series	311.93.570	14	Overlay Doors	Opening angle 165°, Press Fit
Concealed Hinges Baseplates	311.98.510	14	Overlay Doors	
Concealed Hinges A-Series	311.93.573	20	Inset Doors	Opening angle 165°, Press Fit
Concealed Hinges Baseplates	311.98.512	20	Inset Doors	
Matt Stainless Steel Pull Handle	903.00.853	2	Bath Slider Door (Fat Wall)	
Top-Hung Slider Mounting Set	940.00.007	1	Bath Slider Door (Fat Wall)	INC:Double Roller Running Gear, Suspension Bolt-M8X35, Set Nut-M8, Track Stopper
Top-Hung Slider Track	941.00.253	1	Bath Slider Door (Fat Wall)	2.5 m
Slider Guides	405.46.910	2	Bath Slider Door (Fat Wall)	
Easy Cargo 50 Trash Management	502.70.522	1	Kitchen Island	
Wardrobe Rail, Bedroom	805.12.456	2	Bedroom Closet	Top-mounted, 17.5" Length
Wardrobe Rail, Living Room	801.42.200	1	Living Room Closet	Side-mounted
Wardrobe Rail Supports	803.56.200	2	Living Room Closet	
Piano Hinges	351.09.613	2	Heat Pump Closet	
Magnetic Catches	246.26.300	2	Heat Pump Closet	

1 HARDWARE SCHEDULE

Drawn by A.Rude
Date August 7, 2007
Revised
Date

2007 Solar Decathlon

University of Colorado at Boulder
Civil, Environmental, and Architectural Engineering
428 UCB, Room ECCE 441
Boulder, CO 80309-0428

Hardware Schedule

A8.04

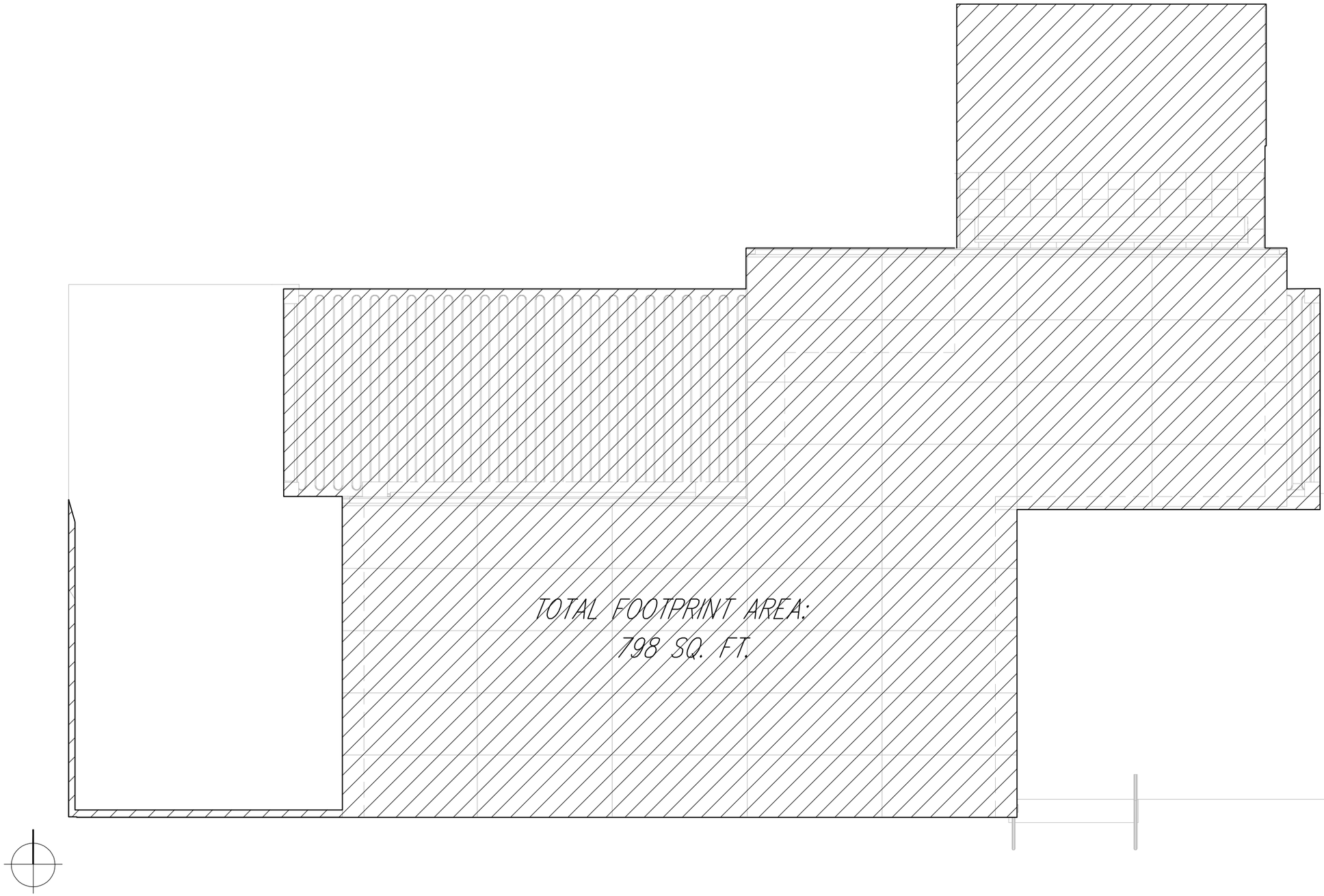

1 TOTAL FOOTPRINT

1/4" = 1'-0"

Drawn by	Date
A.Rude	August 7, 2007
Revised	Date

2007 Solar Decathlon

University of Colorado at Boulder

Civil, Environmental, and Architectural Engineering
428 UCB, Room ECCE 441
Boulder, CO 80309-0428

Total Footprint Plan

0 1' 2' 4' 8'

CC
1.01

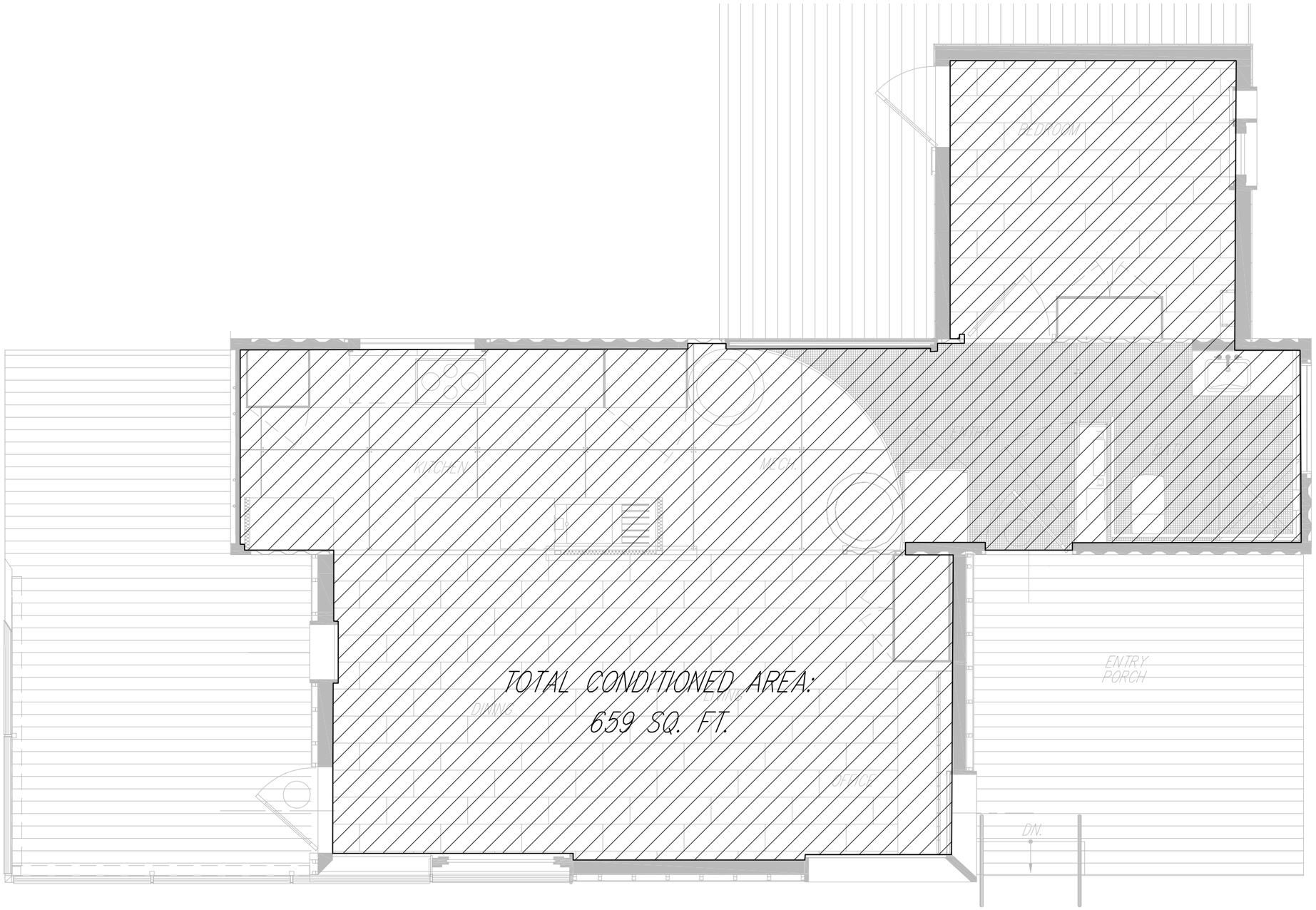

1 CONDITIONED AREA

1/4" = 1'-0"

Drawn by	Date
A.Rude	August 7, 2007
Revised	Date

Total Conditioned Space Plan

0 1' 2' 4' 8'

2007 Solar Decathlon

University of Colorado at Boulder

Civil, Environmental, and Architectural Engineering
428 UCB, Room ECCE 441
Boulder, CO 80309-0428

CC
1.02

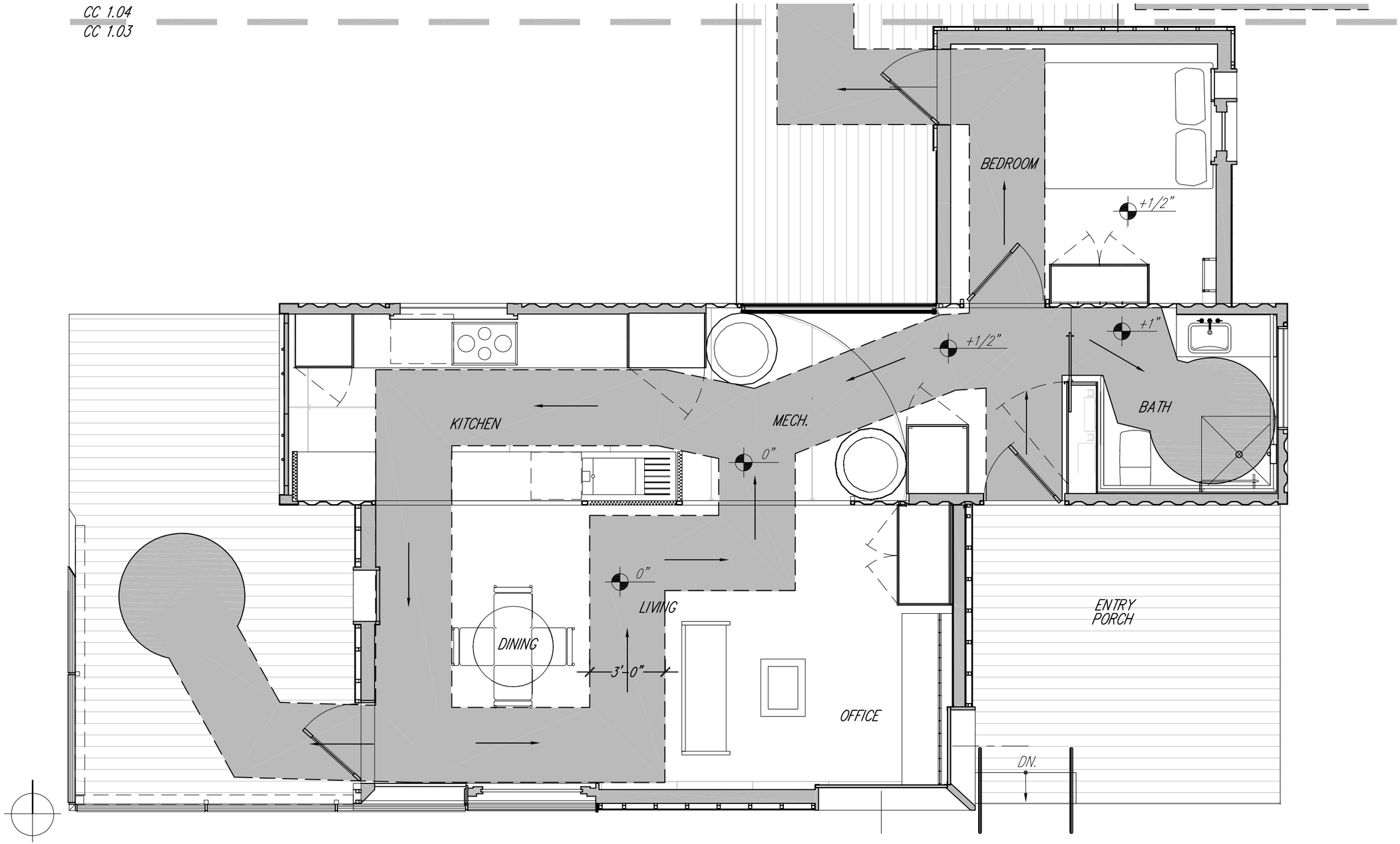

1 TOUR ROUTE

1/4" = 1'-0"

Drawn by	Date
A.Rude	August 7, 2007
Revised	Date

2007 Solar Decathlon

University of Colorado at Boulder
Civil, Environmental, and Architectural Engineering
428 UCB, Room ECCE 441
Boulder, CO 80309-0428

Tour Route

0 1' 2' 4' 8'

CC 1.03

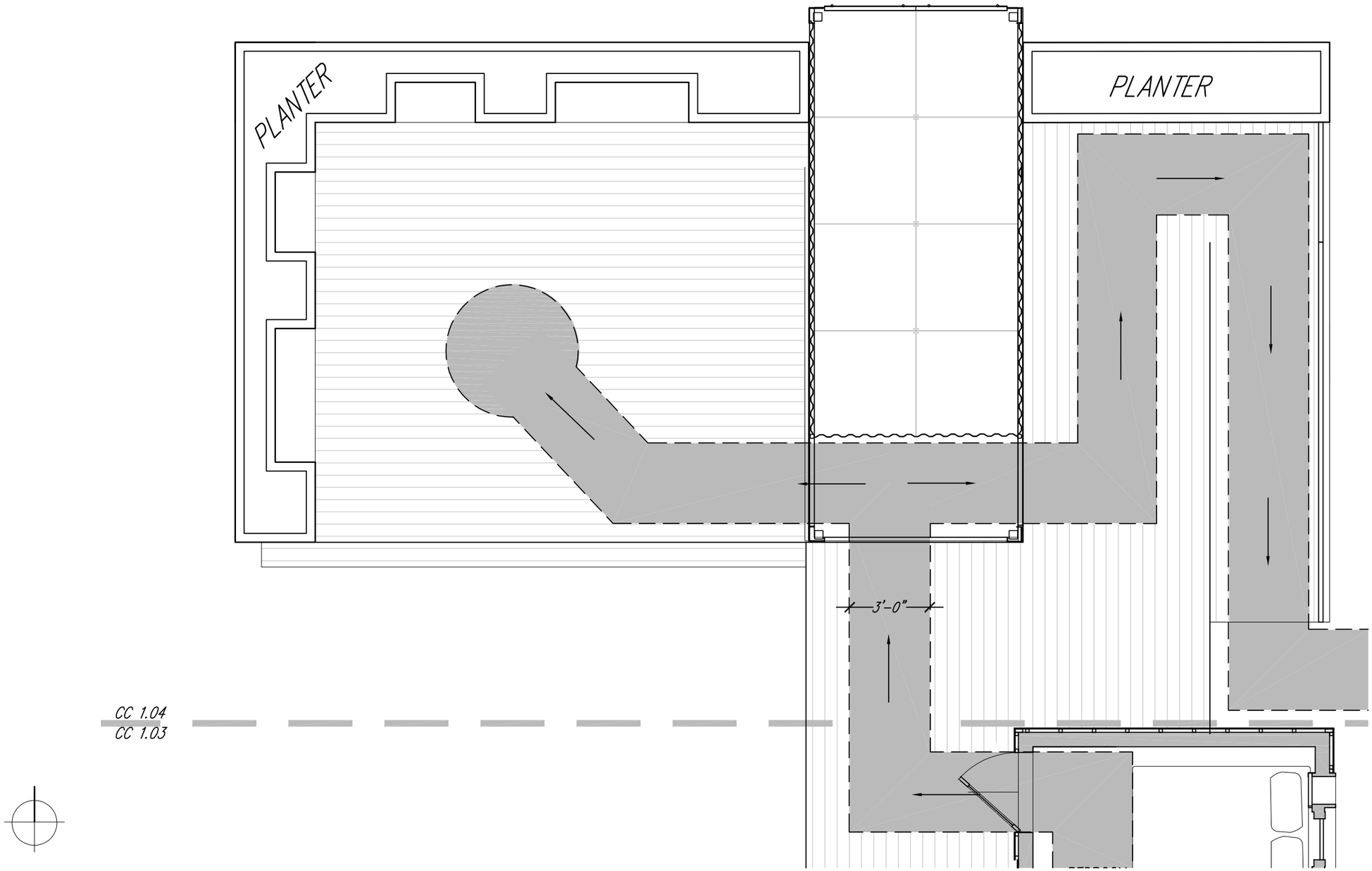

1 TOUR ROUTE

1/4" = 1'-0"

Drawn by	Date
A.Rude	August 7, 2007
Revised	Date

2007 Solar Decathlon

University of Colorado at Boulder
Civil, Environmental, and Architectural Engineering
428 UCB, Room ECCE 441
Boulder, CO 80309-0428

Tour Route

0 1' 2' 4' 8'

CC
1.04

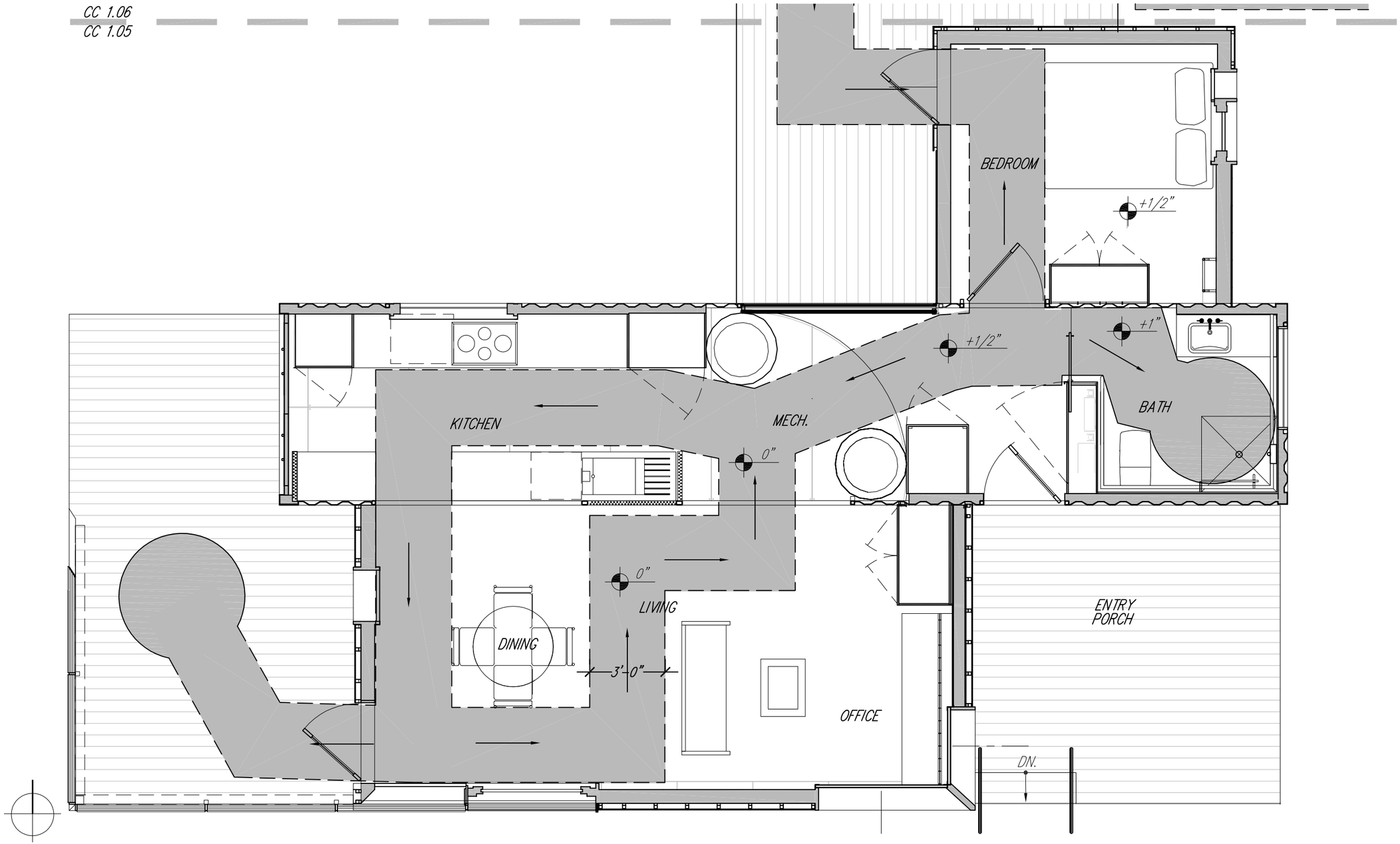

1 ACCESSIBLE TOUR ROUTE

1/4" = 1'-0"

Drawn by	Date
A.Rude	August 7, 2007
Revised	Date

2007 Solar Decathlon

University of Colorado at Boulder
Civil, Environmental, and Architectural Engineering
428 UCB, Room ECCE 441
Boulder, CO 80309-0428

Accessible Tour Route

0 1' 2' 4' 8'

CC
1.05

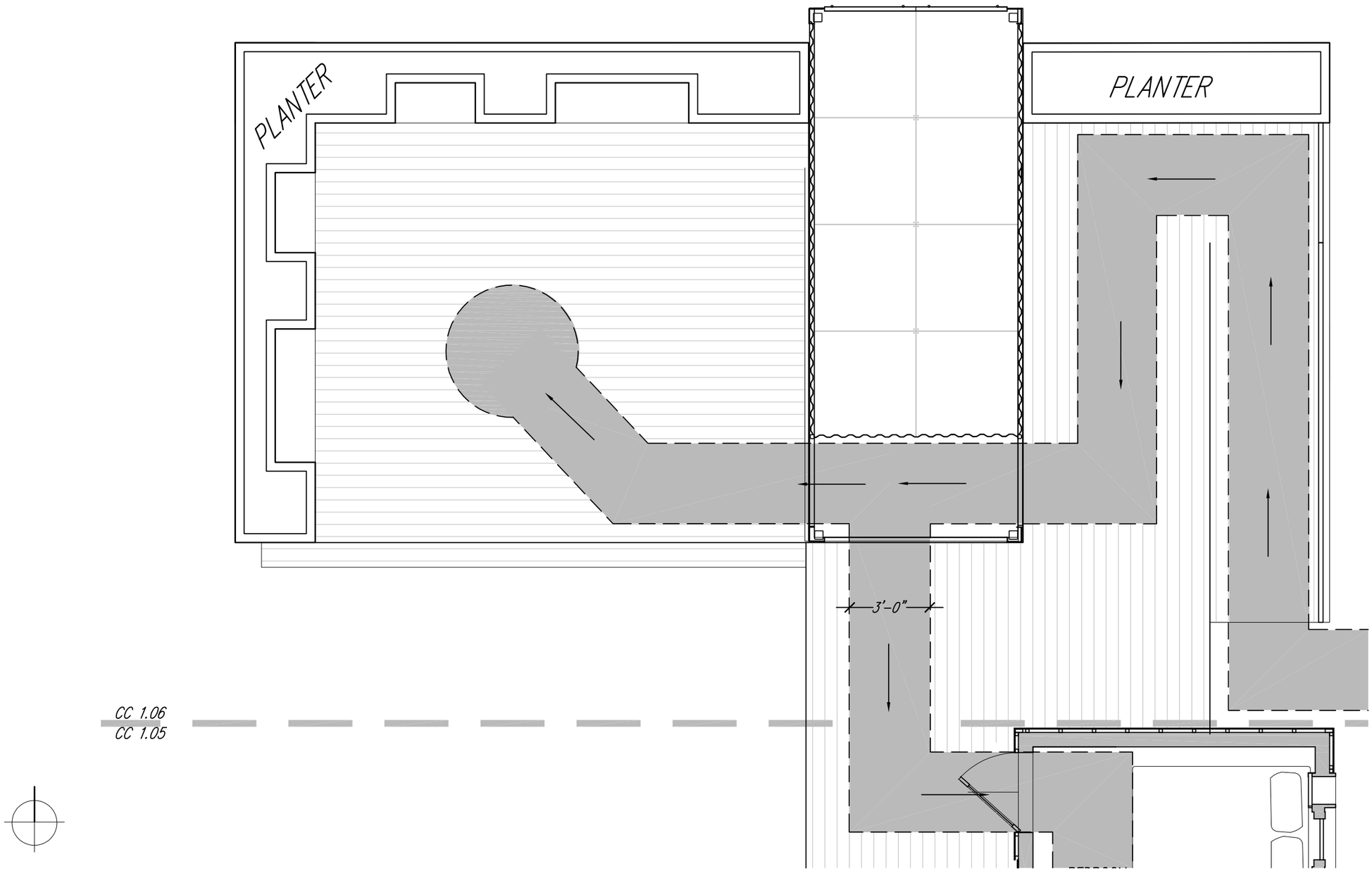

1 ACCESSIBLE TOUR ROUTE

1/4" = 1'-0"

Drawn by	Date
A.Rude	August 7, 2007
Revised	Date

2007 Solar Decathlon

University of Colorado at Boulder
Civil, Environmental, and Architectural Engineering
428 UCB, Room ECCE 441
Boulder, CO 80309-0428

Accessible Tour Route

0 1' 2' 4' 8'

CC
1.06

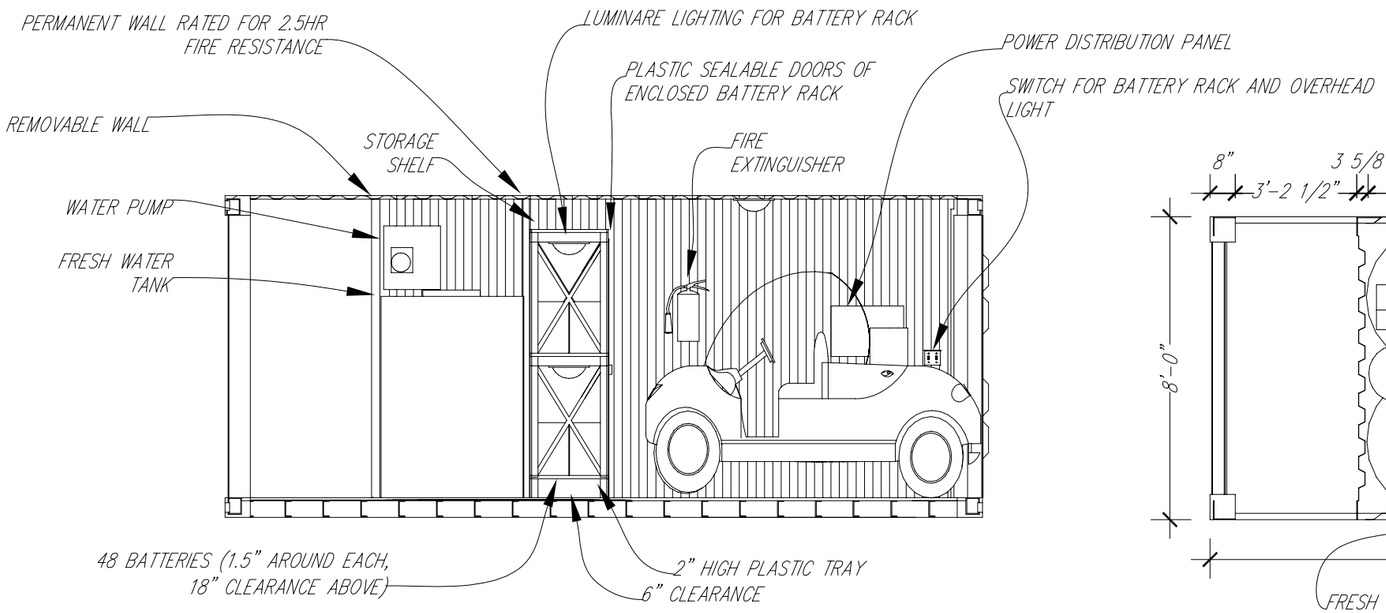

1 LONGITUDINAL SECTION
1/4" – 1'-0"

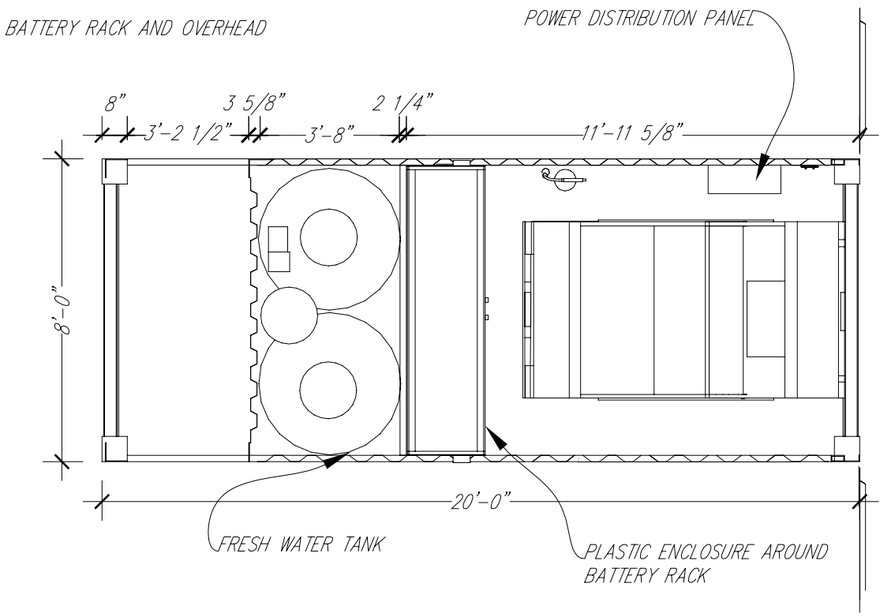

2 GARAGE PLAN
1/4" – 1'-0"

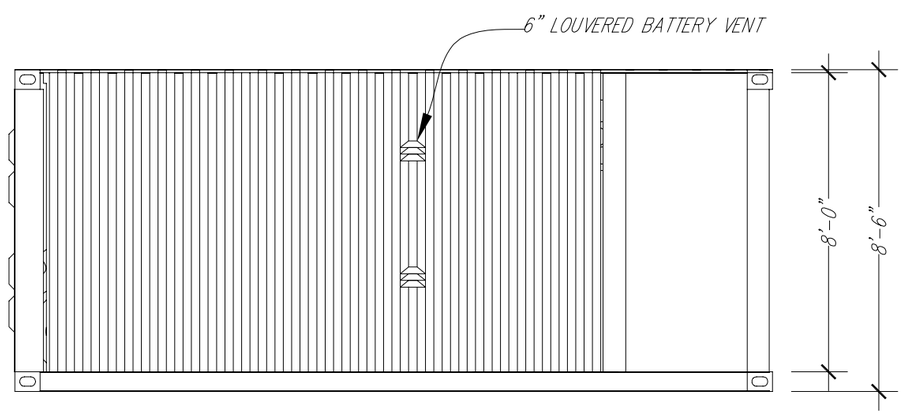

1 WEST ELEVATION
1/4" – 1'-0"

Drawn by	Date
C.Corbin	August 7, 2007
Revised	Date

2007 Solar Decathlon

University of Colorado at Boulder
Civil, Environmental, and Architectural Engineering
428 UCB, Room ECCE 441
Boulder, CO 80309-0428

Garage Schematic

0 1' 2' 4' 8'

CC
1.07

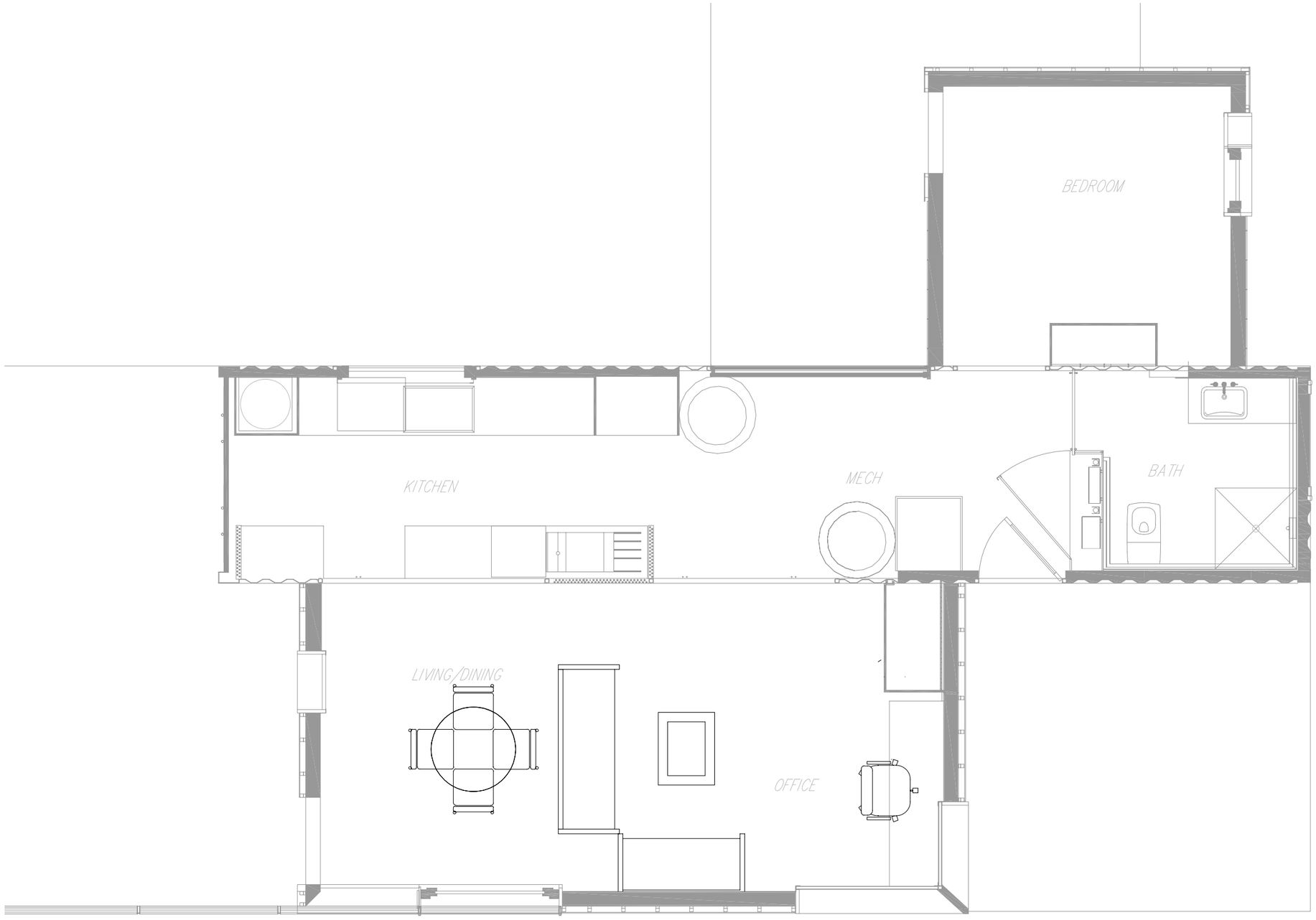

1 FURNITURE PLAN
1/4" – 1'-0"

Drawn by	Date
C.Corbin	August 7, 2007
Revised	Date

2007 Solar Decathlon

University of Colorado at Boulder
Civil, Environmental, and Architectural Engineering
428 UCB, Room ECCE 441
Boulder, CO 80309-0428

Furniture Plan

0 1' 2' 4' 8'

CC
1.08

1 ARRIVAL
N. T. S.

Drawn by	Date
C.Corbin	August 7, 2007
Revised	Date

2007 Solar Decathlon

Arrival

University of Colorado at Boulder
Civil, Environmental, and Architectural Engineering
428 UCB, Room ECCE 441
Boulder, CO 80309-0428

CC
1.09

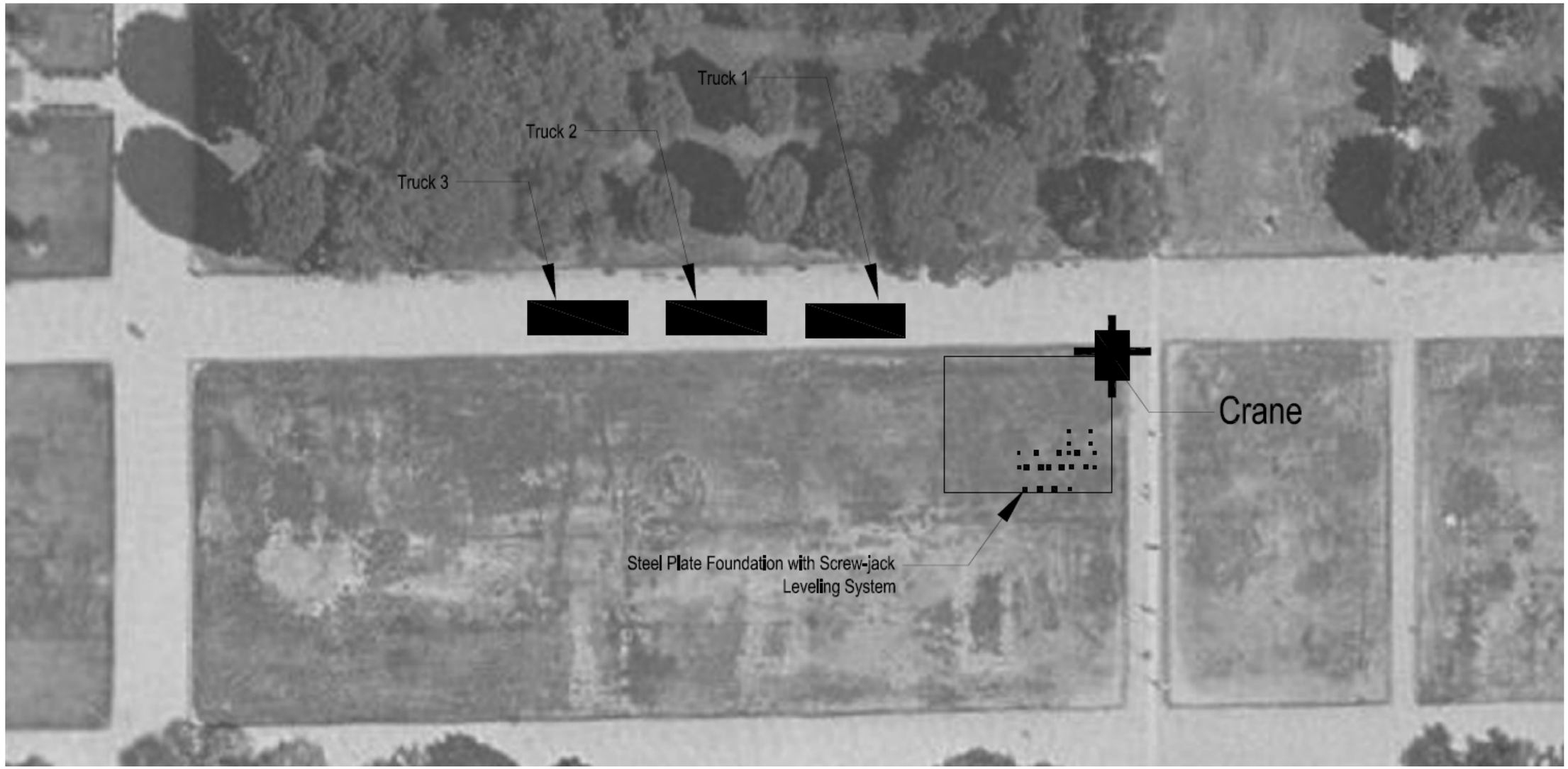

1 STEP 1: FOUNDATION PLACEMENT
N.T.S.

Drawn by	Date
C.Corbin	August 7, 2007
Revised	Date

Step 1: Foundation Placement

2007 Solar Decathlon

University of Colorado at Boulder
Civil, Environmental, and Architectural Engineering
428 UCB, Room ECCE 441
Boulder, CO 80309-0428

CC
1.10

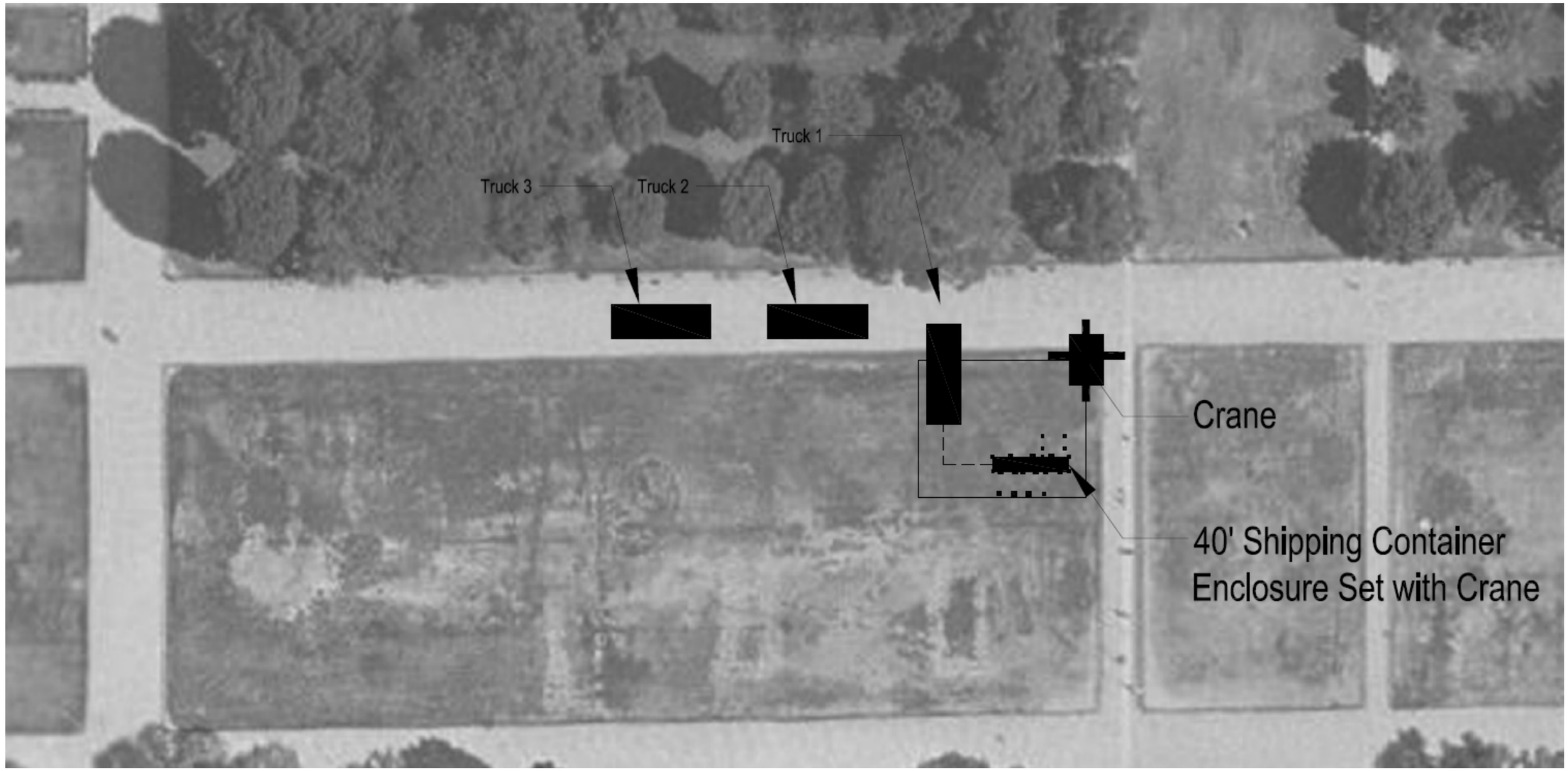

1 STEP 2: CONTAINER PLACEMENT
N.T.S.

Drawn by	Date
C.Corbin	August 7, 2007
Revised	Date

2007 Solar Decathlon

University of Colorado at Boulder
Civil, Environmental, and Architectural Engineering
428 UCB, Room ECCE 441
Boulder, CO 80309-0428

Step 2: Container Placement

CC
1.11

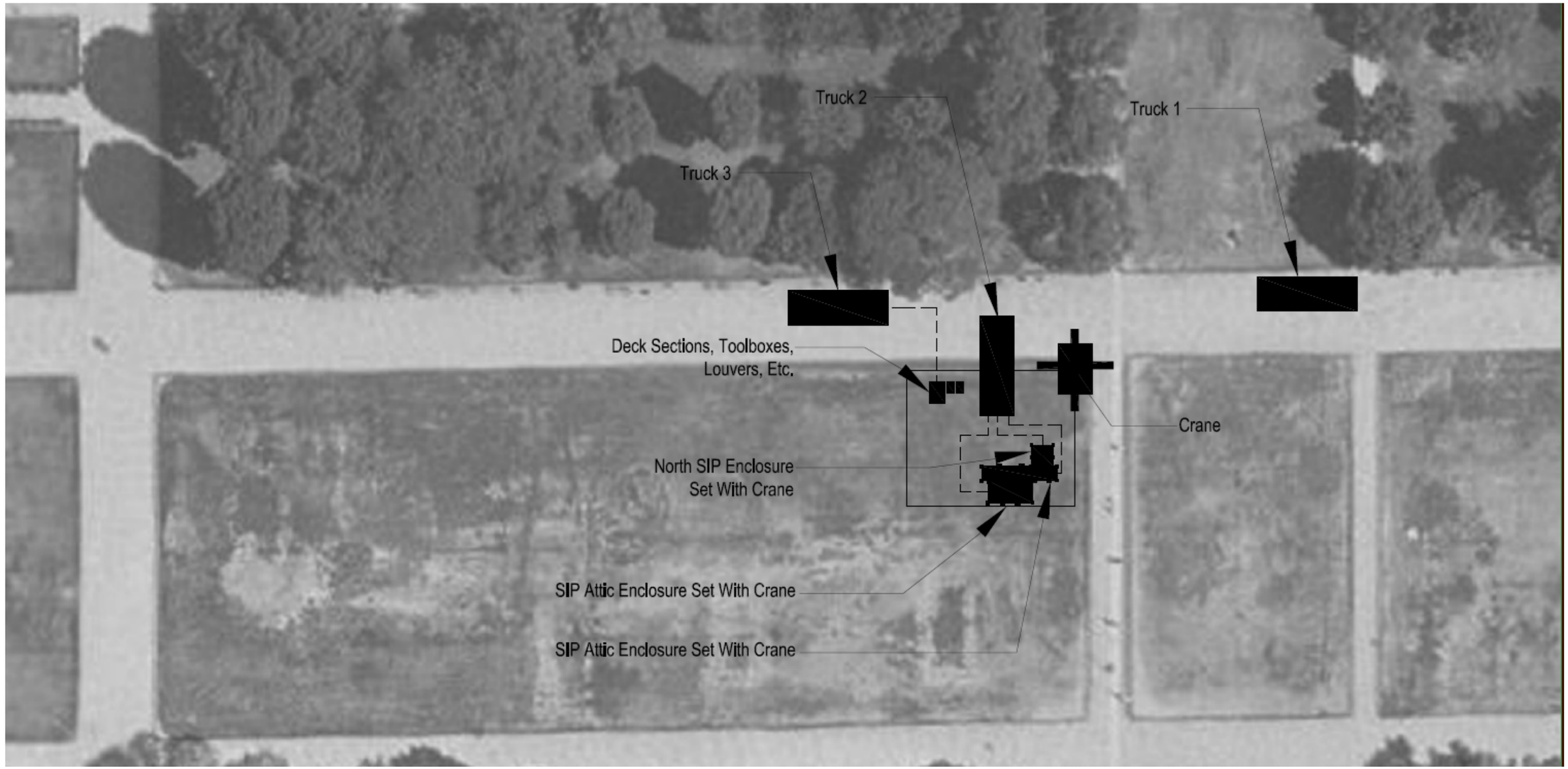

1 STEP 3: SIP ASSEMBLY
N.T.S.

Drawn by	Date
C.Corbin	August 7, 2007
Revised	Date

2007 Solar Decathlon

Step 3: SIP Assembly

University of Colorado at Boulder
Civil, Environmental, and Architectural Engineering
428 UCB, Room ECCE 441
Boulder, CO 80309-0428

CC
1.12

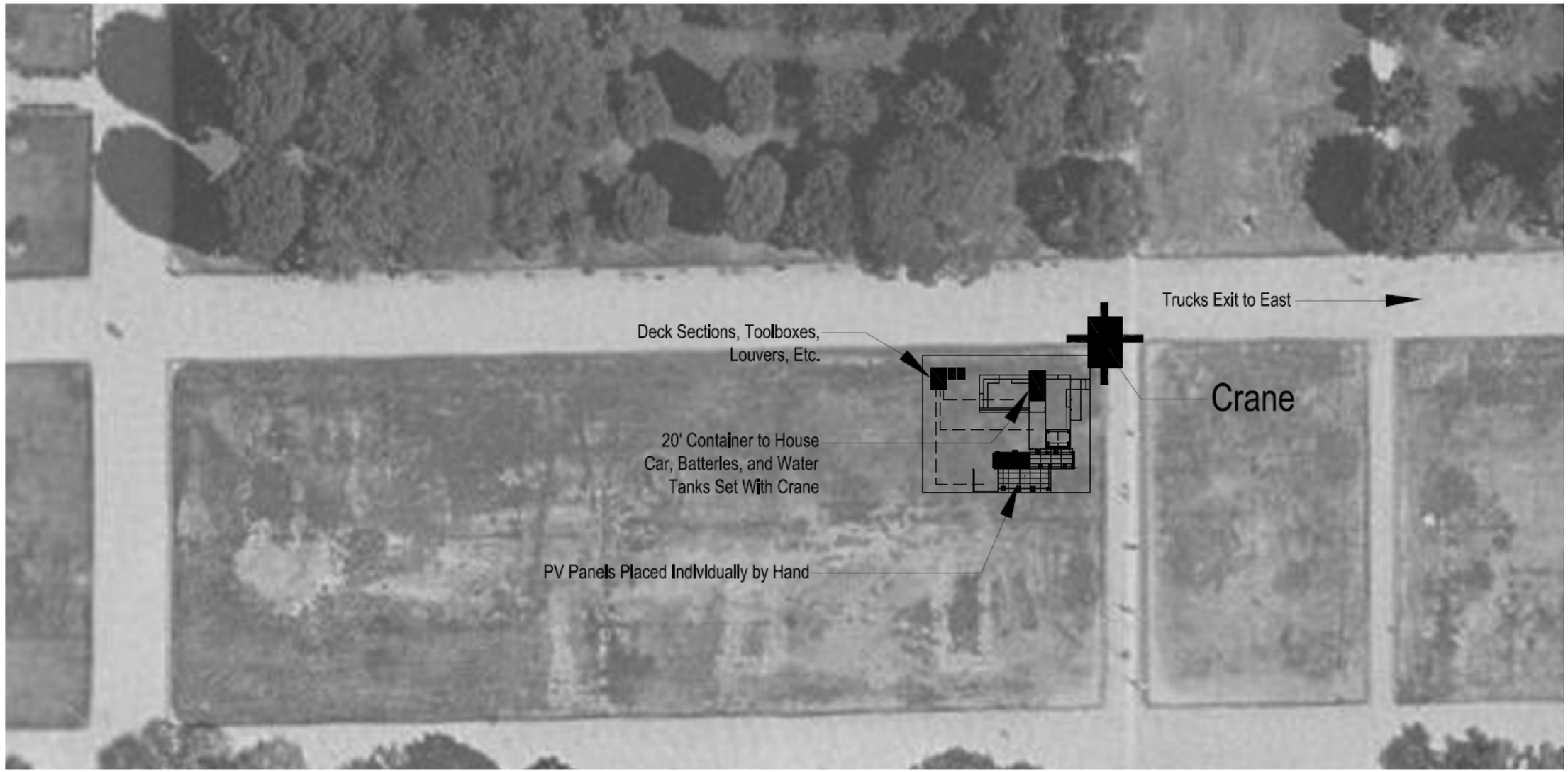

1 STEP 4: BIPV ROOF ASSEMBLY
N.T.S.

Drawn by	Date
C.Corbin	August 7, 2007
Revised	Date

Step 4: BIPV Roof Assembly

2007 Solar Decathlon

University of Colorado at Boulder
Civil, Environmental, and Architectural Engineering
428 UCB, Room ECCE 441
Boulder, CO 80309-0428

CC
1.13

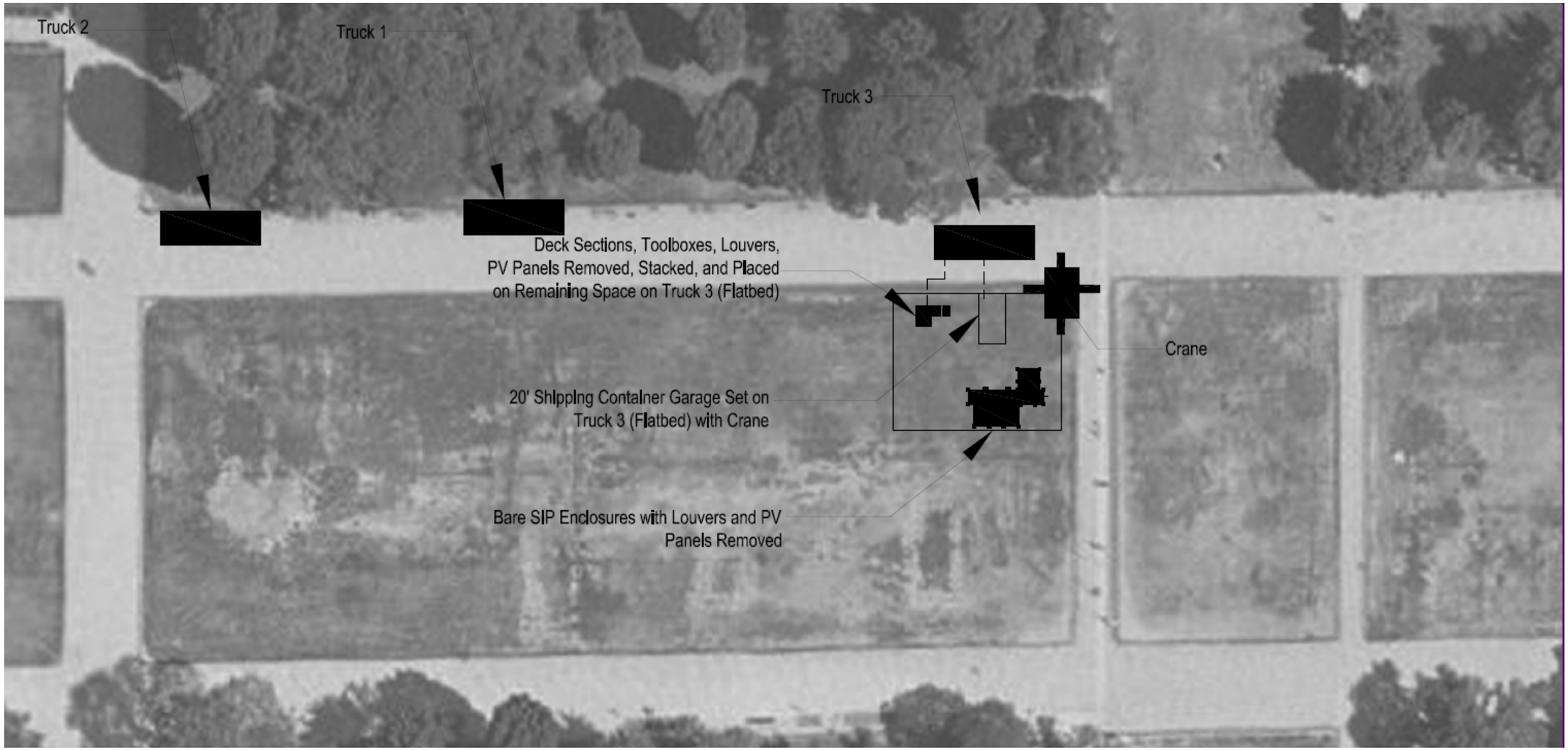

1 DISSASSEMBLY STEP 1
N.T.S.

Drawn by	Date
C.Corbin	August 7, 2007
Revised	Date

2007 Solar Decathlon

University of Colorado at Boulder
Civil, Environmental, and Architectural Engineering
428 UCB, Room ECCE 441
Boulder, CO 80309-0428

Dissassebly Step 1

CC
1.14

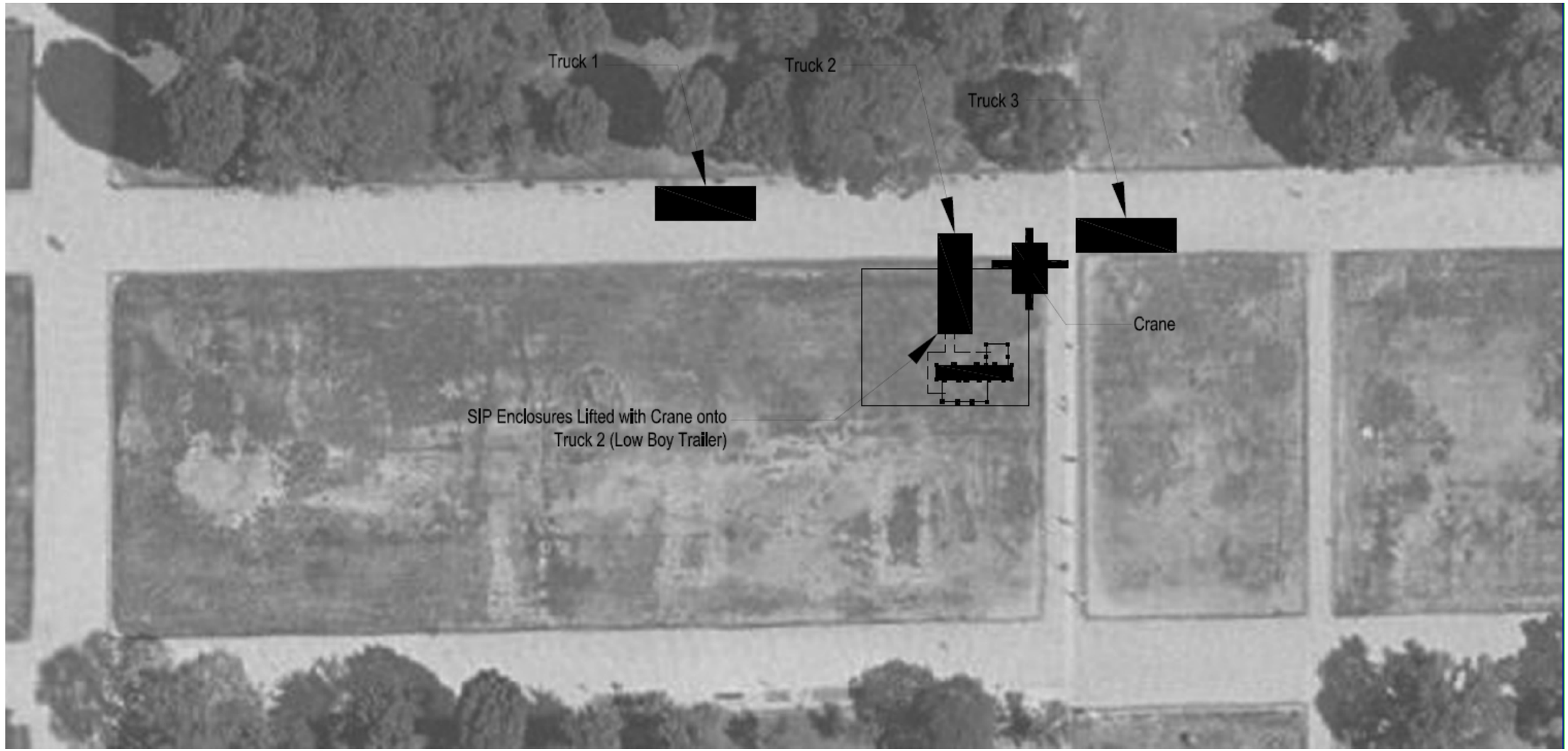

1 DISSASSEMBLY STEP 2
N.T.S.

Drawn by	Date
C.Corbin	August 7, 2007
Revised	Date

2007 Solar Decathlon

Dissassebly Step 2

University of Colorado at Boulder
Civil, Environmental, and Architectural Engineering
428 UCB, Room ECCE 441
Boulder, CO 80309-0428

CC
1.15

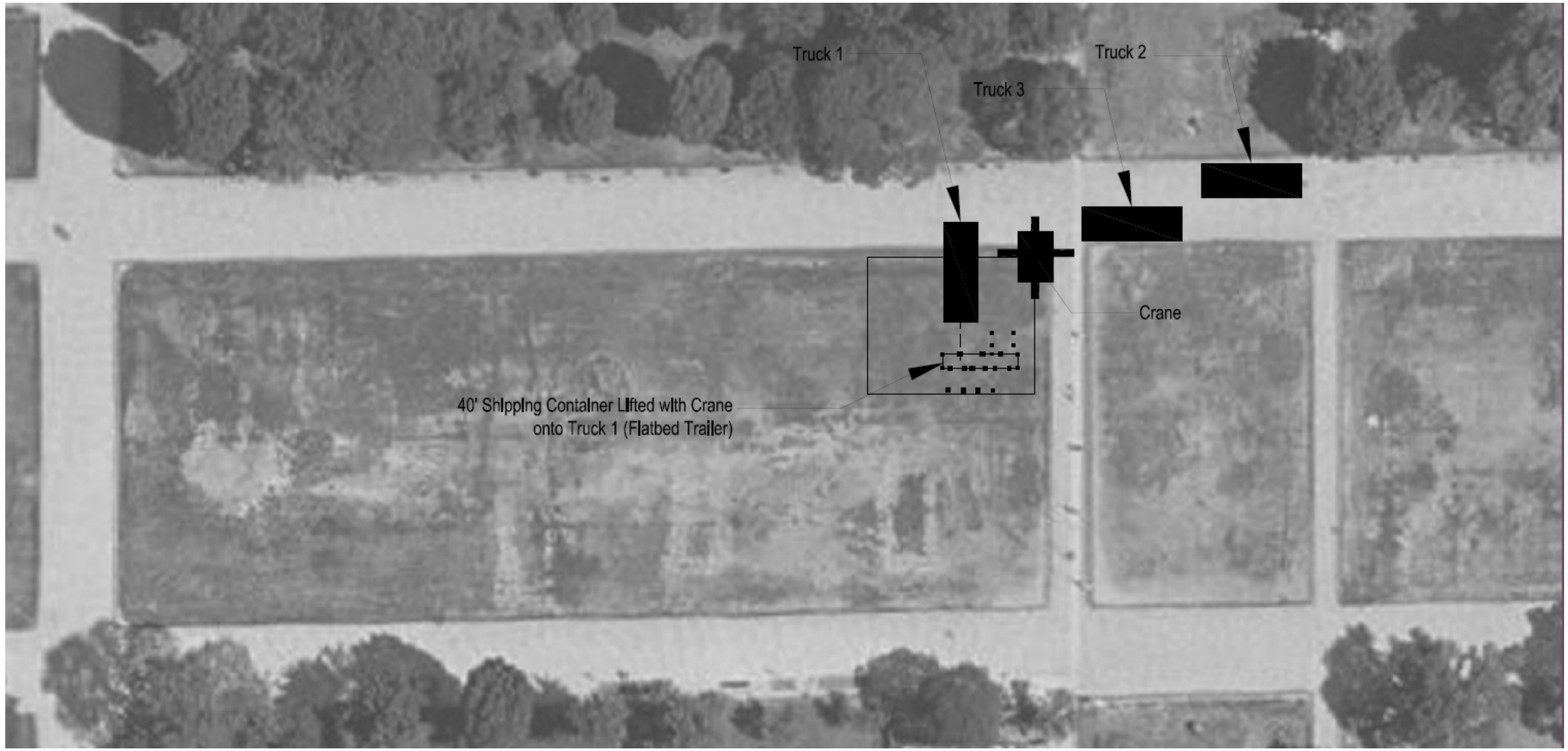

1 DISSASSEMBLY STEP 3
N.T.S.

Drawn by	Date
C.Corbin	August 7, 2007
Revised	Date

2007 Solar Decathlon

Dissassebly Step 3

University of Colorado at Boulder
Civil, Environmental, and Architectural Engineering
428 UCB, Room ECCE 441
Boulder, CO 80309-0428

CC
1.16

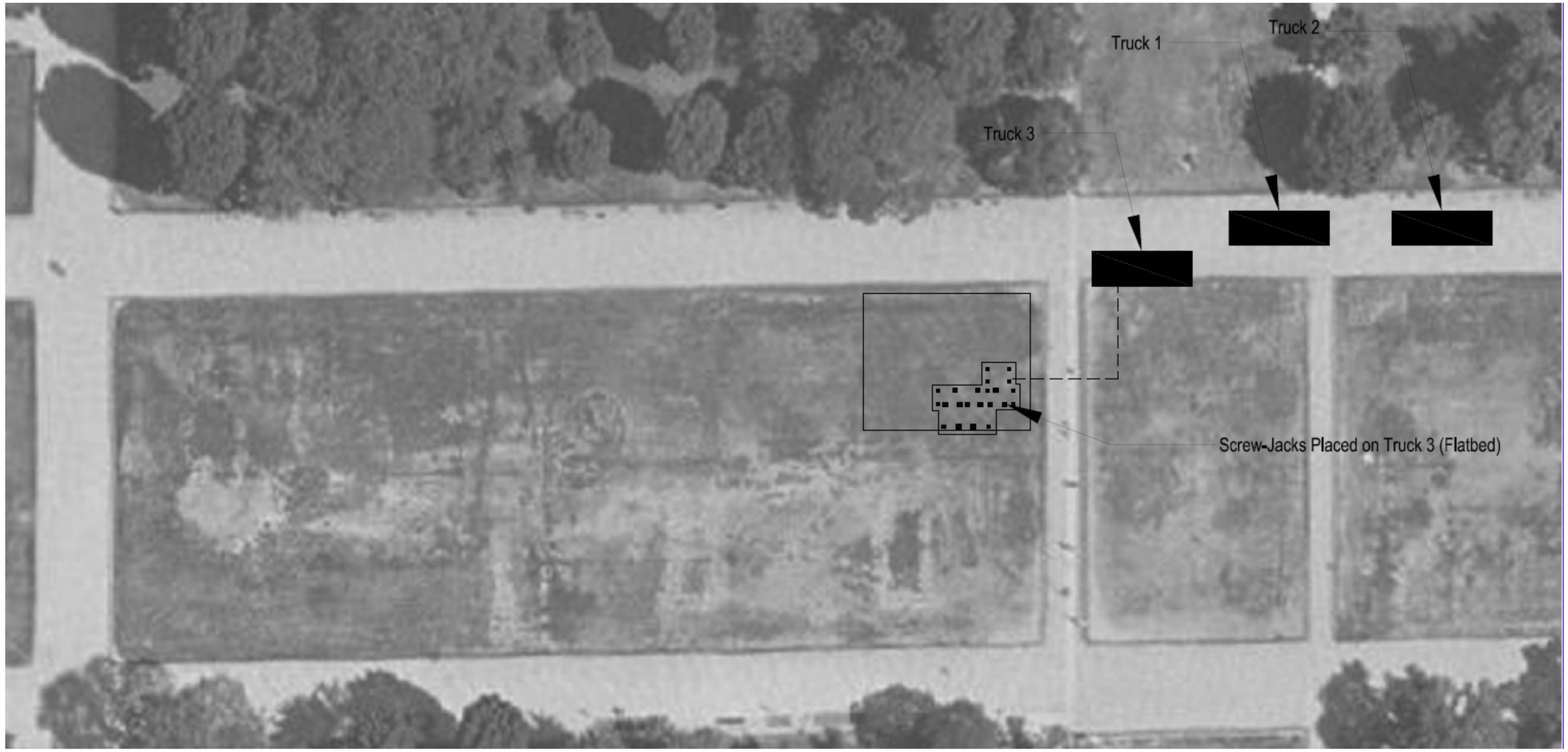

1 DISSASSEMBLY STEP 4
N.T.S.

Drawn by	Date
C.Corbin	August 7, 2007
Revised	Date

2007 Solar Decathlon

Dissassebly Step 4

University of Colorado at Boulder
Civil, Environmental, and Architectural Engineering
428 UCB, Room ECCE 441
Boulder, CO 80309-0428

CC
1.17

GENERAL STRUCTURAL NOTES

JVA Job # Solar Decathlon 2007

DESIGN LIVE LOADS: 2006 IBC, U.O.N.

- Snow: 20 psf
- Wind: 90 mph, exp C, 3-second gust, DC
  130 mph, exp C, 3-second gust, CD
- Floor: 50 psf
- Exterior Decks: 50 psf

FOUNDATION:

* Foundation design is in accordance with recommendations contained in soils investigation "Colar Decathlon Building Code" dated May 3, 2006 .
* The report is hereby referenced and except where otherwise specifically noted herein, all recommendations and precautions contained in that report shall be adhered to by the contractor.
* Footings shall be placed on undisturbed natural soil or compacted fill tested and approved by soils engineer.
  * Maximum design soil pressure: 1500 psf

STRUCTURAL STEEL:

- Structural Beams: ASTM A992
- Angles, misc: ASTM A36
- Anchor Bolts: ASTM A307 or A36.
- Standard pipe columns: ASTM A 53, Grade B.
- Tube Columns: ASTM A500, Grade B, 46 ksi
- Connector bolts: ASTM A325
- All structural steel shall be fabricated and erected per the current edition of AISC Steel Construction Manual.
- Welding by qualified welders. E70XX electrodes. 5/16" fillet welds, unless noted otherwise.
- Except as noted, framed beam connections shall be detailed to develop 0.6 x Allowable Uniform Load values tabulated in the 9th Edition AISC Manual, Pg. 2-27 and following.
- All beams shall have full depth web stiffeners each side of webs above and below columns. (3/4" or as noted)
- Attach wood nailer plates to beams with 1/2" diameter machine or carriage bolts at maximum 32" o.c., or 3/8" diameter bolts at 32" with glued contact face, or 5/32" diameter powder actuated drive pins at 24" o.c., U.O.N.

WOOD FRAMING:

* Dimension Lumber is designed and shall be supplied using BASE VALUES Design Criteria.
* Hem-Fir #2 and better (Maximum Moisture Content 19%) U.O.N.
  Plates: Sill plates: Preservative treated Hem Fir or Southern Pine.
* "Pressure treated lumber" shall be framing material of the specified species which has been pressure treated with a decay and insect resistant solution, meeting all current standards for wood in contact with concrete or earth. Sill plates in contact with masonry or concrete foundations, footings or slabs may be treated Timber Strand LSL (zinc borate treatment). Acceptable treatment mediums for wood in contact with earth or in exterior applications include ACQ (Alkaline Copper Quaternary) and copper azole. All connectors shall meet the recommendations of the pressure treated wood manufacturer, but shall be not less than Hot Dipped Galvanized or Stainless Steel. All screws, nails and bolts shall match hangers and other connectors. Do not mix stainless with galvanized products.
  Do not allow aluminum to contact treated wood.
  Top and Bottom Plates: Hem Fir
  Hem Fir Studs U.O.N: 2 x 4 and 2 x 6 to 8'-0: stud grade
  2x4 over 8'-0 standard and better
  2x6 over 8'-0 No. 2 and better
* Beams: Douglas Fir No. 1, Fb=1350 psi, E=1,600,000 psi
* Columns: Douglas Fir No. 1, Fb=1200 psi, E=1,600,000 psi
* Laminated Veneer Lumber (LVL): Manufactured 1 3/4" wide Microllams (ML) by Trus Joist or equivalent.
  Fb=2,600 psi, E=1,900,000 psi, Fv=285 psi, depth noted on plans.
* LSL Rim Joists: Manufactured 1-1/4" x depth indicated laminated strand lumber by Trus Joist. No substitutions.
* Glued, laminated framing members per ANSI Standard A190.1-92. Mark members with an AITC Quality Stamp and furnish an AITC Certificate of Conformance. Doug Fir, Fb = 2400 psi, E = 1,800,000
  Simple span: Combination Symbol: 24FV4, <<<ZERO 2400 FT SEE PLANS for >>> camber.
  Multiple span, continuous beam, and cantilevered beams. Combination Symbol: 24FV8, zero camber.

* Minimum nailing shall comply with UBC Table 23-II-B-1 or IBC Table 2304.9.1 except where more or larger nailing shown on drawings.
* Metal connectors: Simpson Strong Tie unless otherwise noted, installed with number and type of nails to achieve maximum rated capacity. Note that heavy duty and skewed hangers may require special order.
* All beams shall be braced against rotation at points of bearing.
* Drypack grout all beam pockets full after beams are set.
* Lead holes for lag screws shall be 60% to 70% of lag shank diameter in compliance with AITC criteria.

STRUCTURAL INSULATED PANEL FRAMING:

*Except as noted otherwise, minimum nailing shall be provided as specified in IBC Table 2304.9.1 "Fastening Schedule."
*Roof to Wall connection
  Fasteners shall have minimum of 1-1/2" penetration into support member. Secure roof panel to wall top spline with both screw fasteners 2" thicker than panel spaced 12" o.c. and two strips of construction adhesive.
*Roof to Beams or top wall plates
  Fasteners for 4-1/2" roof panels shall be 6" panel screw at 8" o.c.
  Fasteners for 6-1/2" roof panels shall be 8" panel screw at 8" o.c.
*Roof Panels to Ridge beam
  Fasteners for 4-1/2" roof panels shall be 6" panel screw at 12" o.c.
  Fasteners for 6-1/2" roof panels shall be 8" panel screw at 12" o.c.
*Wall to Floor connections
  Use 16d nails space 6" o.c. in two staggered rows to secure bottom spline to floor sill.
*Wall panel Assembly: Lock panels together using manufacturer specified locking system.
*Plywood and oriented strand board (OSB) floor and roof sheathing shall be APA graded with panel identification index, thickness, and nailing as noted on the drawings.
*End stud at each doorjamb, at all exterior corners, and at ends of OSB sheathed wall sections shall have one H4 anchor to the sole plate.

STRUCTURAL ERECTION AND BRACING REQUIREMENTS

* The structural drawings illustrate the completed structure with all elements in their final positions, properly supported and braced. The contractor, in the proper sequence, shall provide proper shoring and bracing as may be required to achieve the final completed structure.
* These plans have been engineered for construction at one specific building site. Builder assumes ALL responsibility for use of these plans at Any Other building site. Plans shall not be used for construction at any other building site without specific review by the engineer.

FRAMING NOTES:

* ① = number of studs in built-up stud columns below, nail all laminations with 16d at 12" o.c. full height.
* T = Header Trimmer
  K = King Stud
  One trimmer and one king stud each side of openings in stud walls U.O.N.
* Header sizes shown are minimum. Headers may be standardized at largest size at contractors option. (If not indicated, min. Header is 3 - 2X8 for 2x6 stud walls, or 2-2x8 for 2x4 stud walls)

SHOP DRAWINGS

Fabricator and / or supplier of structural steel, structurally insulated panels, and shipping container modifications shall submit shop and erection drawings for architect and engineer review. Submit one reproducible and two prints for each drawing. Allow five working days for review.

JVA CONSULTING ENGINEERS
JVA, Incorporated 1319 Spruce Street
Boulder, CO 80302 Phone: 303.444.1951
Fax: 303.444.1957 E-mail: info@jvajva.com

Drawn by	Date
K. Rogne	August 7, 2007
Revised	Date

2007 Solar Decathlon

University of Colorado at Boulder
Civil, Environmental, and Architectural Engineering
428 UCB, Room ECCE 441
Boulder, CO 80309-0428

General Notes

*Scale as Noted

S-1.0

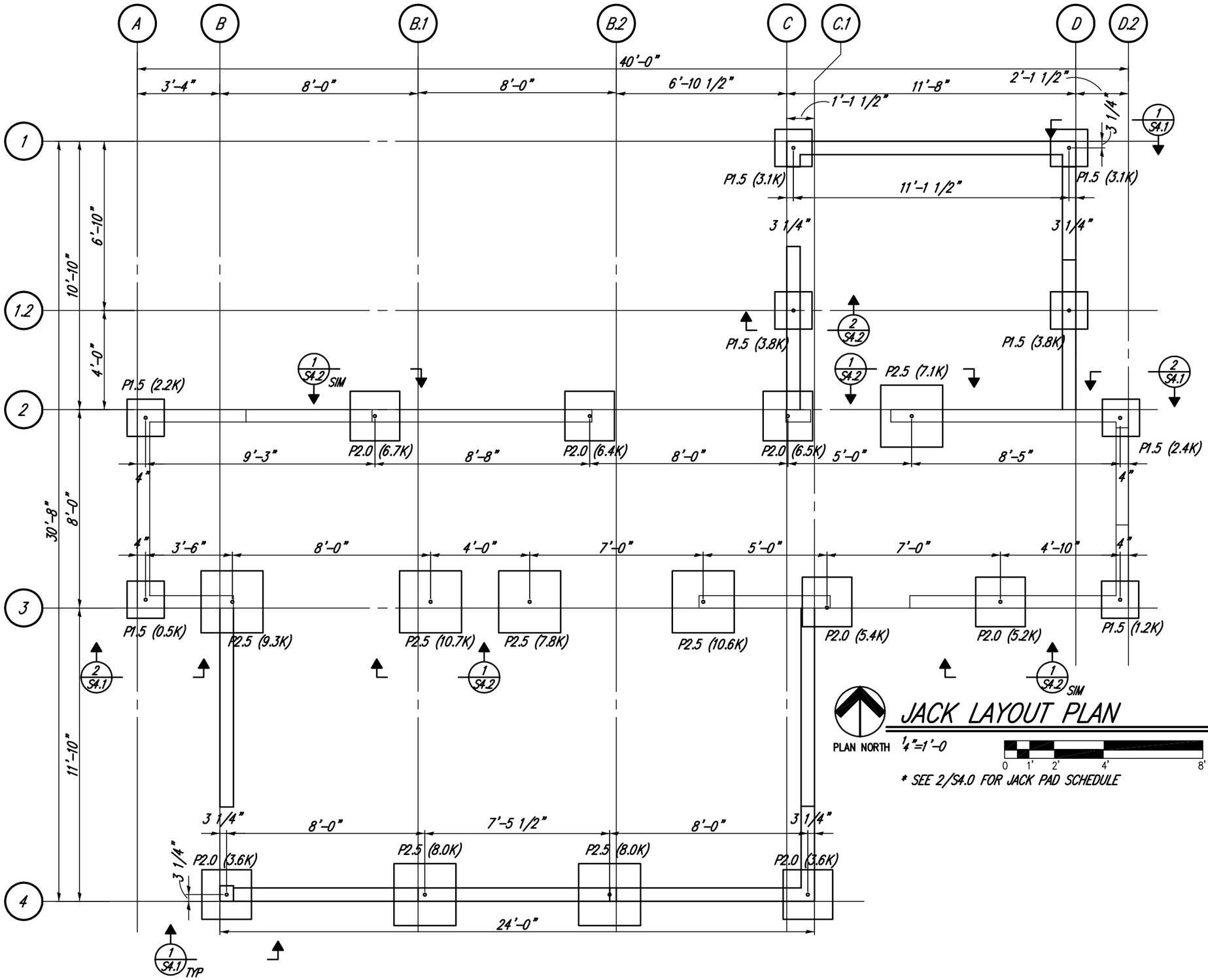

JACK LAYOUT PLAN

* SEE 2/S4.0 FOR JACK PAD SCHEDULE

JVA, Incorporated 1319 Spruce Street
Boulder, CO 80302 Phone: 303.444.1951
Fax: 303.444.1957 E-mail: info@jvajva.com

Drawn by	Date
K. Rogne	August 7, 2007
Revised	Date

2007 Solar Decathlon

University of Colorado at Boulder
Civil, Environmental, and Architectural Engineering
428 UCB, Room ECCE 441
Boulder, CO 80309-0428

Foundation Jack Layout Paln

*Scale as Noted
0 1' 2' 4' 8'

S-2.0

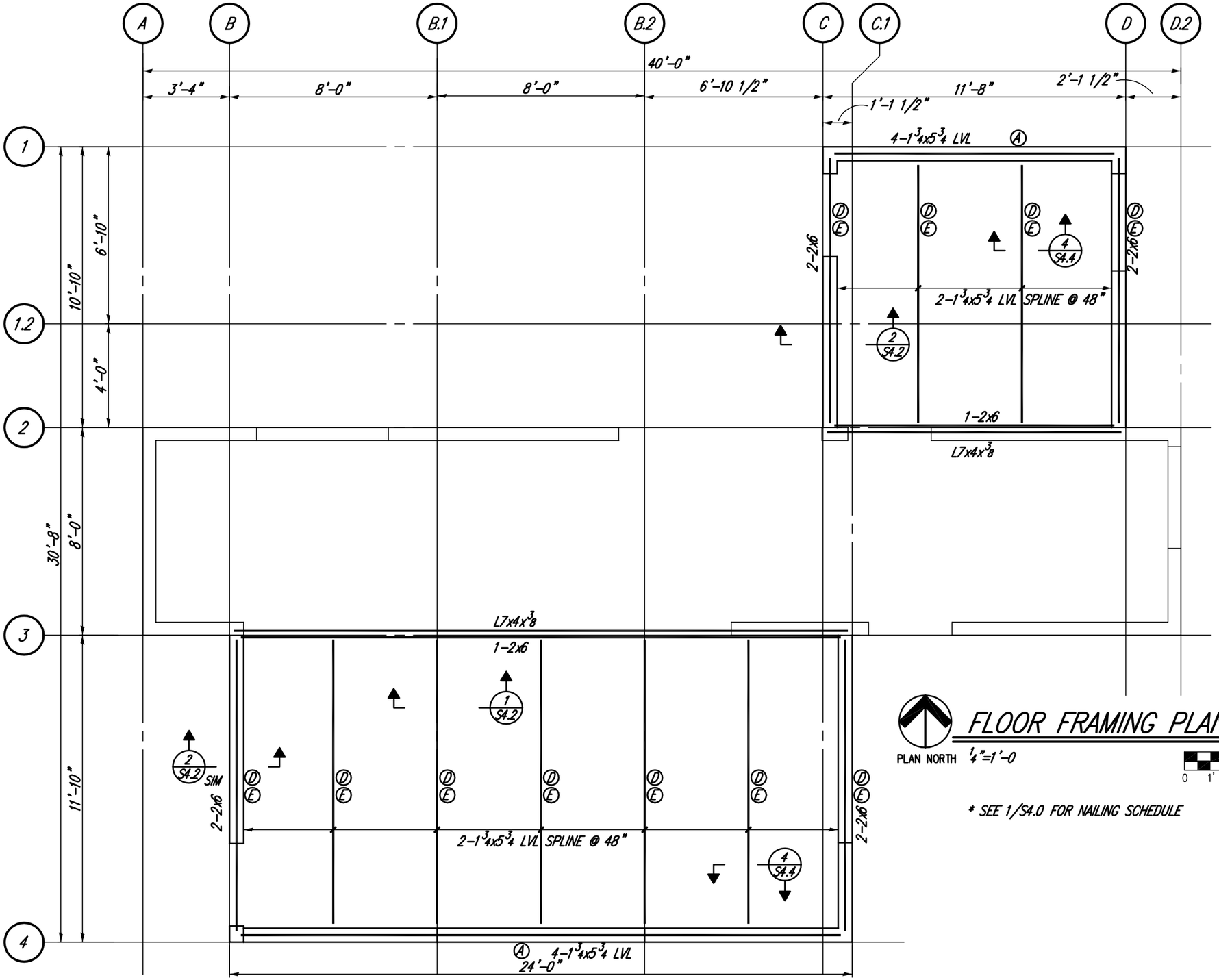

FLOOR FRAMING PLAN

1/4"=1'-0

0 1' 2' 4' 8'

* SEE 1/S4.0 FOR NAILING SCHEDULE

CONSULTING ENGINEERS
JVA, Incorporated 1319 Spruce Street
Boulder, CO 80302 Phone: 303.444.1951
Fax: 303.444.1957 E-mail: info@jvajva.com

Drawn by	Date
K. Rogne	August 7, 2007
Revised	Date

2007 Solar Decathlon

University of Colorado at Boulder
Civil, Environmental, and Architectural Engineering
428 UCB, Room ECCE 441
Boulder, CO 80309-0428

SIPs Floor Framing Plan

*Scale as Noted
0 1' 2' 4' 8'

S-2.1

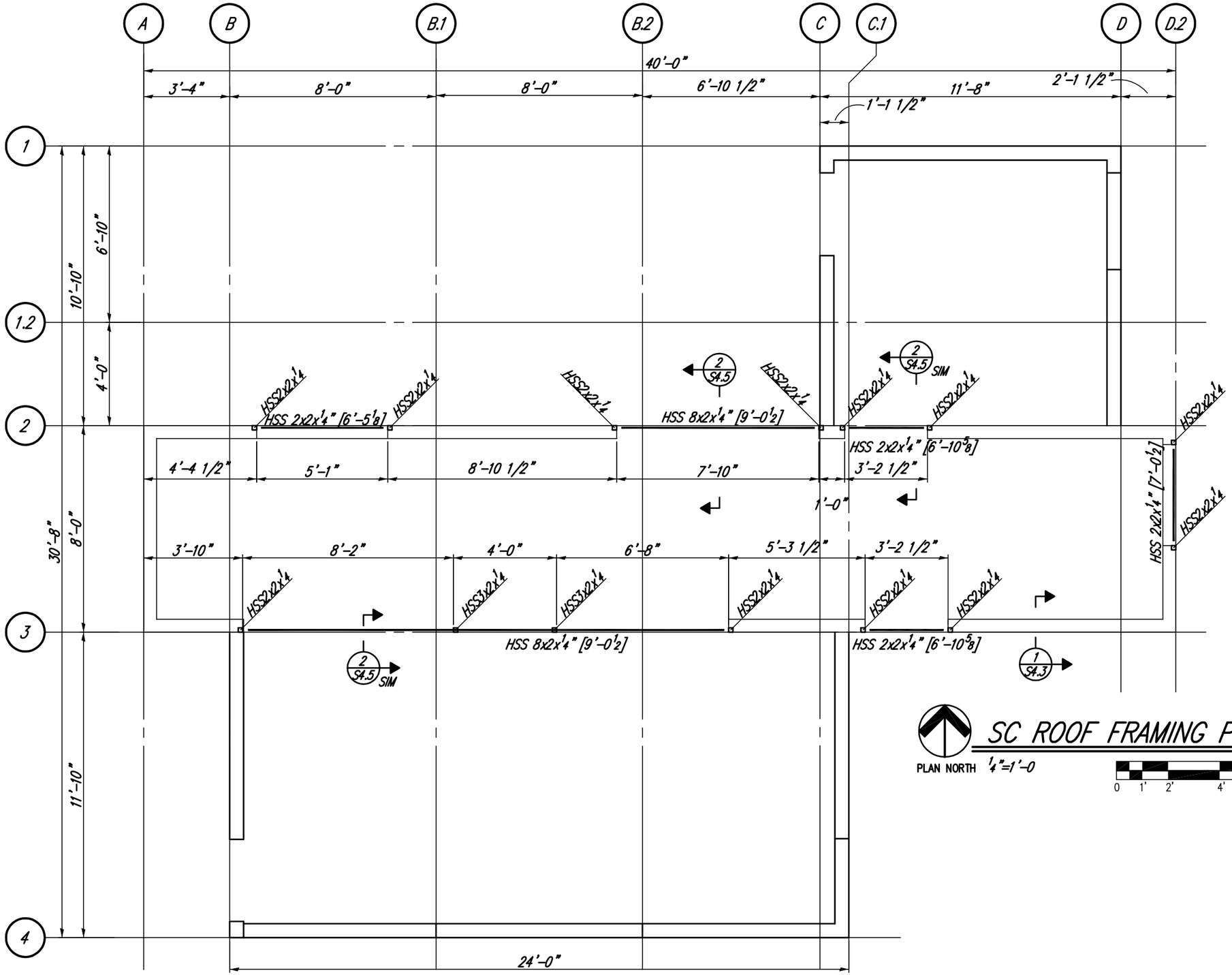

SC ROOF FRAMING PLAN

CONSULTING ENGINEERS
JVA, Incorporated 1319 Spruce Street
Boulder, CO 80302 Phone: 303.444.1951
Fax: 303.444.1957 E-mail: info@jvajva.com

Drawn by	Date
K. Rogne	August 7, 2007
Revised	Date

2007 Solar Decathlon

Shipping Container Framing Plan

University of Colorado at Boulder
Civil, Environmental, and Architectural Engineering
428 UCB, Room ECCE 441
Boulder, CO 80309-0428

*Scale as Noted

0 1' 2' 4' 8'

S-2.2

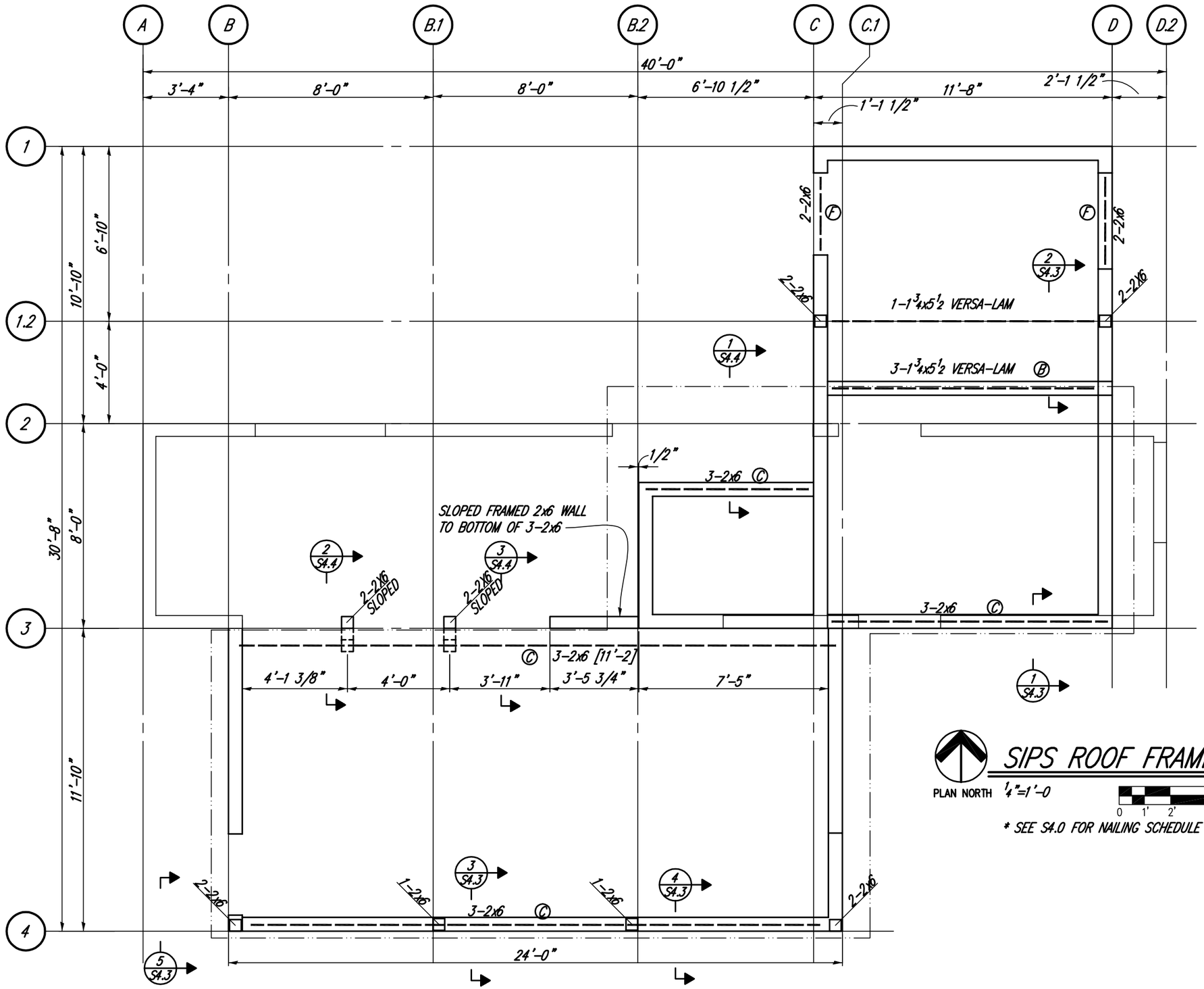

PLAN NORTH

SIPS ROOF FRAMING PLAN

1/4"=1'-0

0 1' 2' 4' 8'

* SEE S4.0 FOR NAILING SCHEDULE

CONSULTING ENGINEERS
JVA, Incorporated 1319 Spruce Street
Boulder, CO 80302 Phone: 303.444.1951
Fax: 303.444.1957 E-mail: info@jvajva.com

Drawn by	Date
K. Rogne	August 7, 2007
Revised	Date

2007 Solar Decathlon

University of Colorado at Boulder
Civil, Environmental, and Architectural Engineering
428 UCB, Room ECCE 441
Boulder, CO 80309-0428

SIPs Roof Framing Plan

*Scale as Noted

0 1' 2' 4' 8'

S-2.3

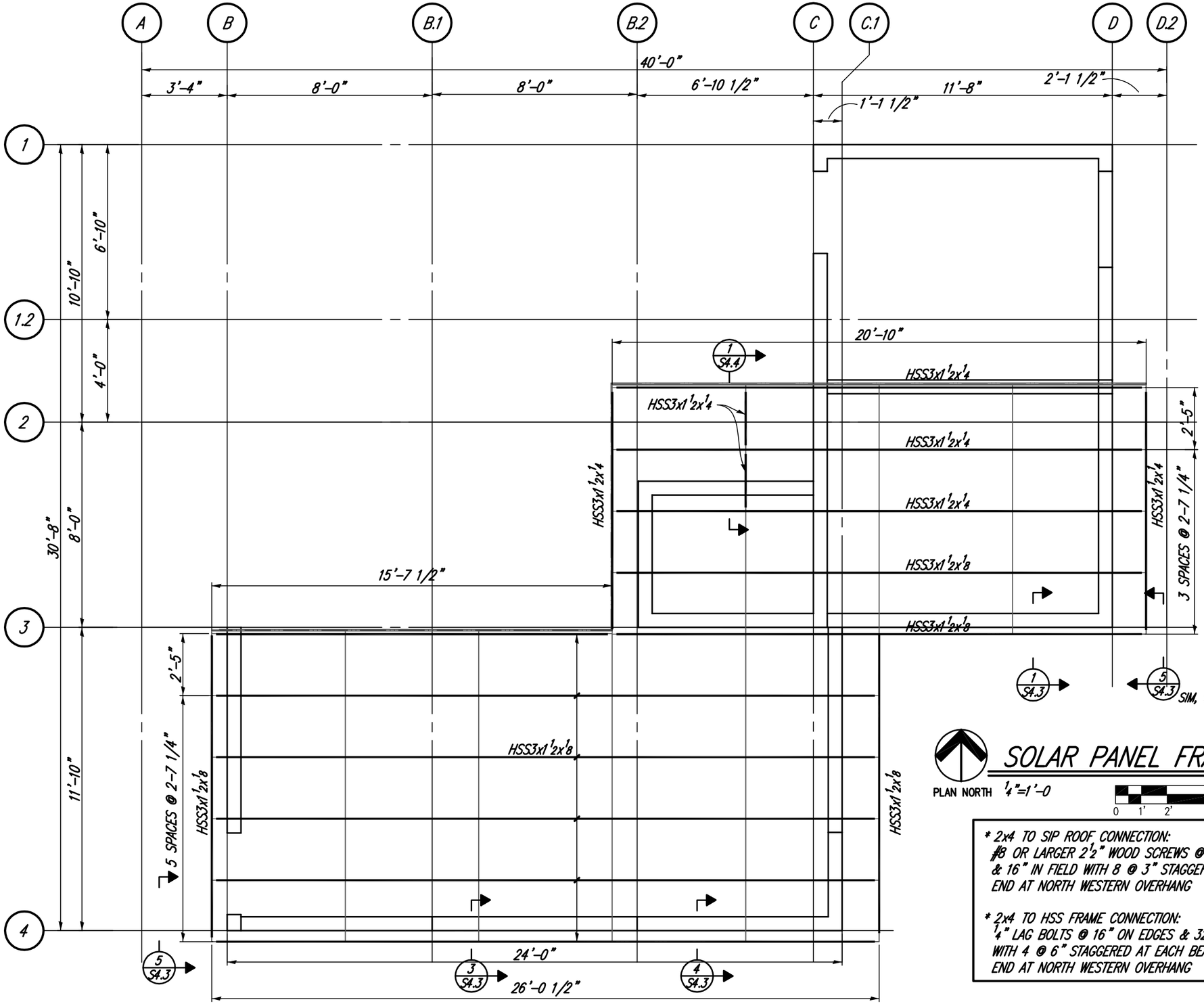

SOLAR PANEL FRAME PLAN

PLAN NORTH

¼"=1'-0

0 1' 2' 4' 8'

* 2x4 TO SIP ROOF CONNECTION:
#8 OR LARGER 2½" WOOD SCREWS @ 10" ON EDGES & 16" IN FIELD WITH 8 @ 3" STAGGERED AT EACH BEAM END AT NORTH WESTERN OVERHANG

* 2x4 TO HSS FRAME CONNECTION:
¼" LAG BOLTS @ 16" ON EDGES & 32" IN FIELD WITH 4 @ 6" STAGGERED AT EACH BEAM END AT NORTH WESTERN OVERHANG

JVA, Incorporated 1319 Spruce Street
Boulder, CO 80302 Phone: 303.444.1951
Fax: 303.444.1957 E-mail: info@jvajva.com

Drawn by	Date
K. Rogne	August 7, 2007
Revised	Date

2007 Solar Decathlon

University of Colorado at Boulder
Civil, Environmental, and Architectural Engineering
428 UCB, Room ECCE 441
Boulder, CO 80309-0428

Solar Panel Frame Plan

*Scale as Noted

0 1' 2' 4' 8'

S-2.4

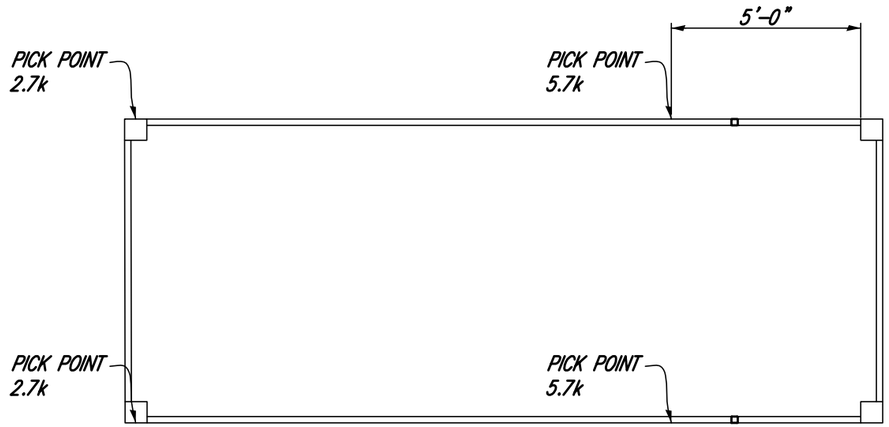

PLAN NORTH

Garage Roof Plan

1/4"=1'-0

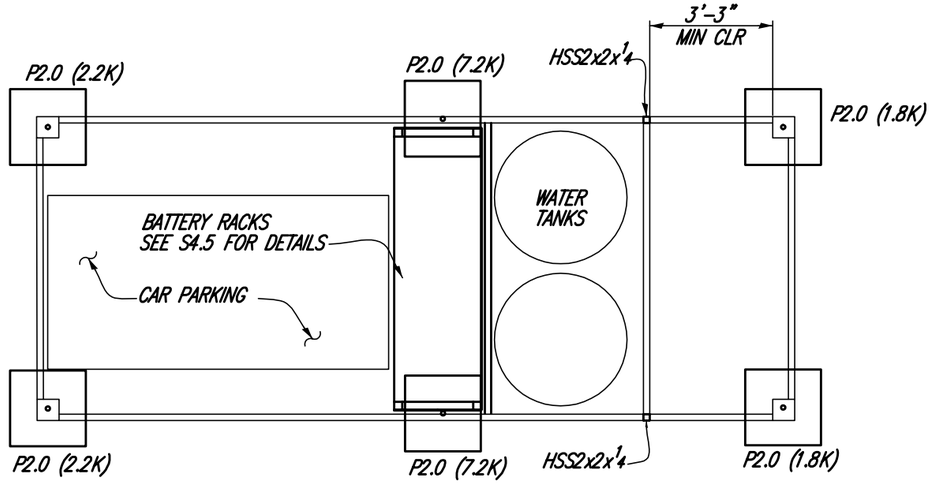

PLAN NORTH

Garage Floor Plan

1/4"=1'-0

0 1' 2' 4' 8'

CONSULTING ENGINEERS
JVA, Incorporated 1319 Spruce Street
Boulder, CO 80302 Phone: 303.444.1951
Fax: 303.444.1957 E-mail: info@jvajva.com

Drawn by	Date
K. Rogne	August 7, 2007
Revised	Date

2007 Solar Decathlon

University of Colorado at Boulder
Civil, Environmental, and Architectural Engineering
428 UCB, Room ECCE 441
Boulder, CO 80309-0428

Garage Floor and Roof Plan

*Scale as Noted

0 1' 2' 4' 8'

S-2.5

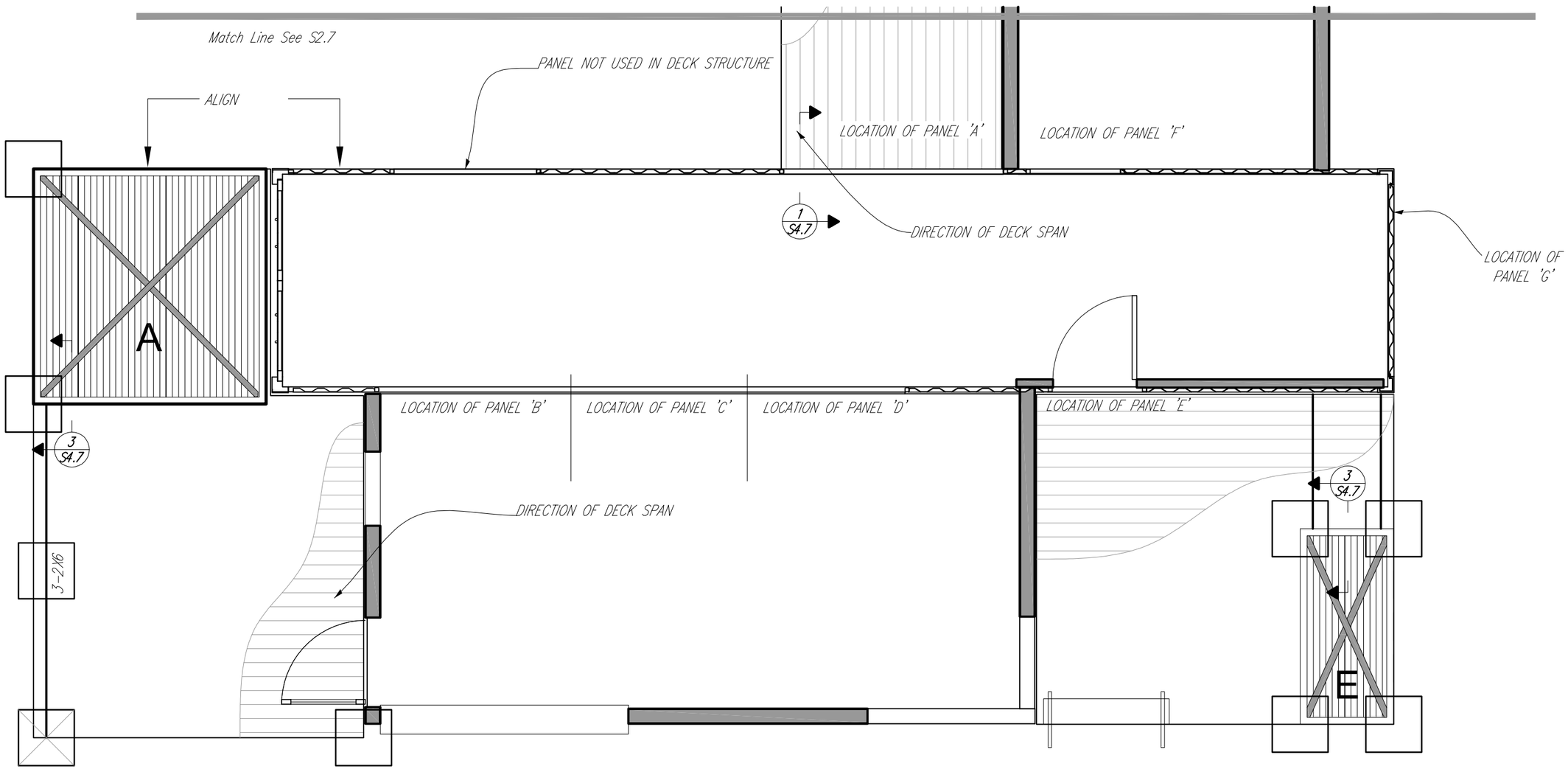

PLAN NORTH

DECK FRAMING PLAN ~ SOUTH

1/4"=1'-0

0 1' 2' 4' 8'

Drawn by	Date
K. Beegles	August 7, 2007
Revised	Date

2007 Solar Decathlon

University of Colorado at Boulder
Civil, Environmental, and Architectural Engineering
428 UCB, Room ECCE 441
Boulder, CO 80309-0428

Deck Framing Plan

0 1' 2' 4' 8'

S2.6

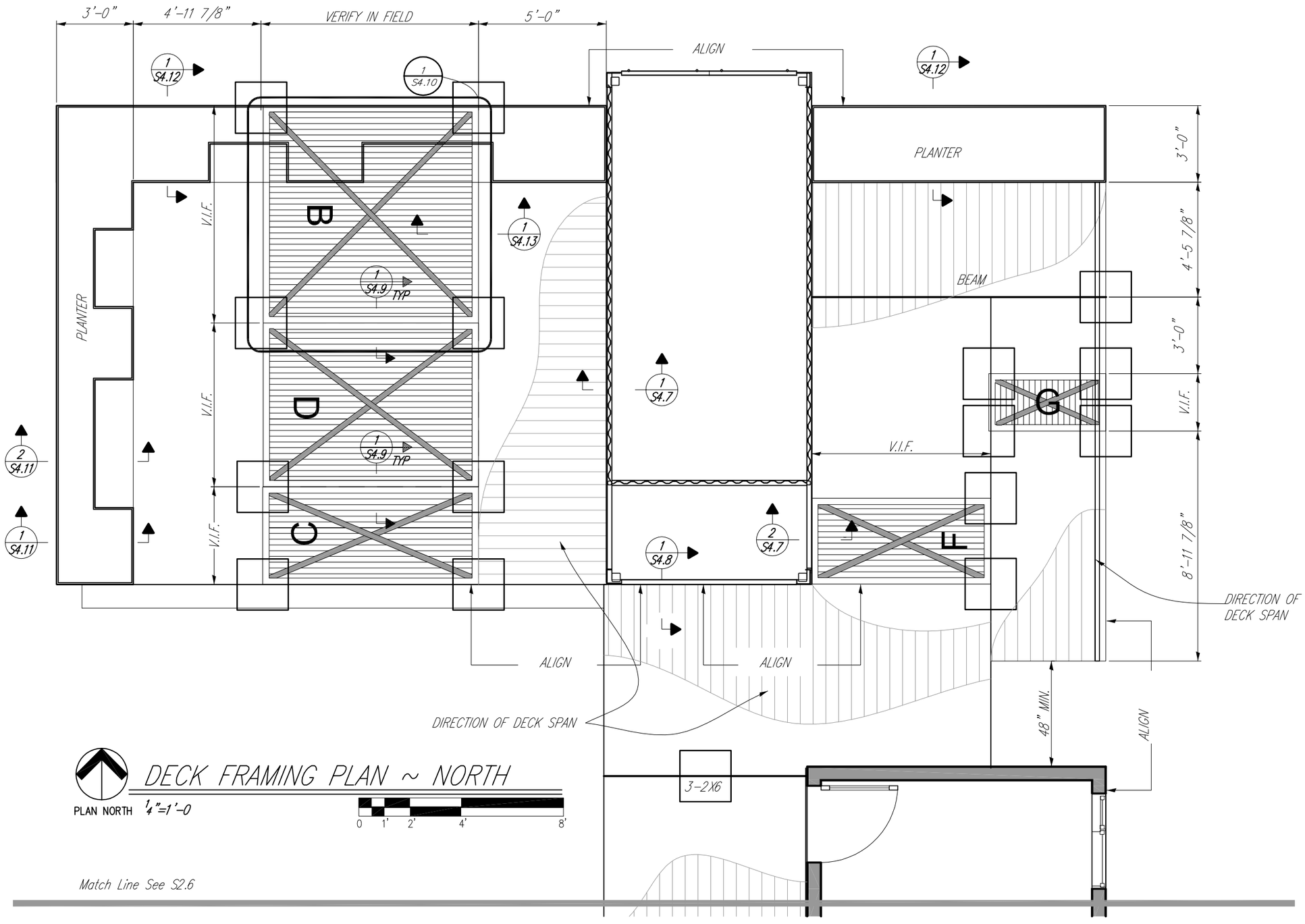

DECK FRAMING PLAN ~ NORTH

Drawn by	Date
K. Beegles	August 7, 2007
Revised	Date

2007 Solar Decathlon

University of Colorado at Boulder

Civil, Environmental, and Architectural Engineering
428 UCB, Room ECCE 441
Boulder, CO 80309-0428

Deck Framing Plan

0 1' 2' 4' 8'

S2.7

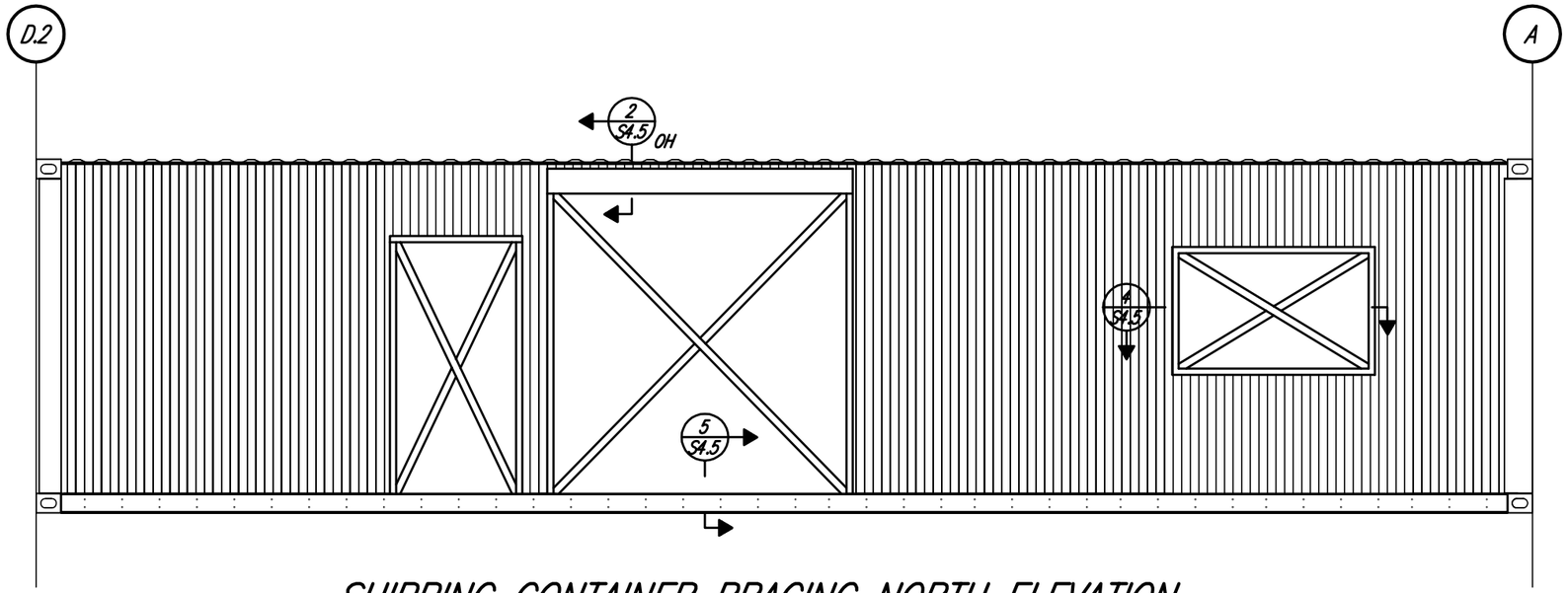

SHIPPING CONTAINER BRACING NORTH ELEVATION

1/4"=1'-0

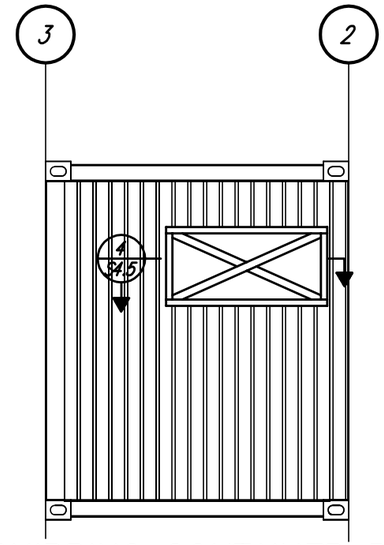

SHIPPING CONTAINER BRACING EAST ELEVATION

1/4"=1'-0

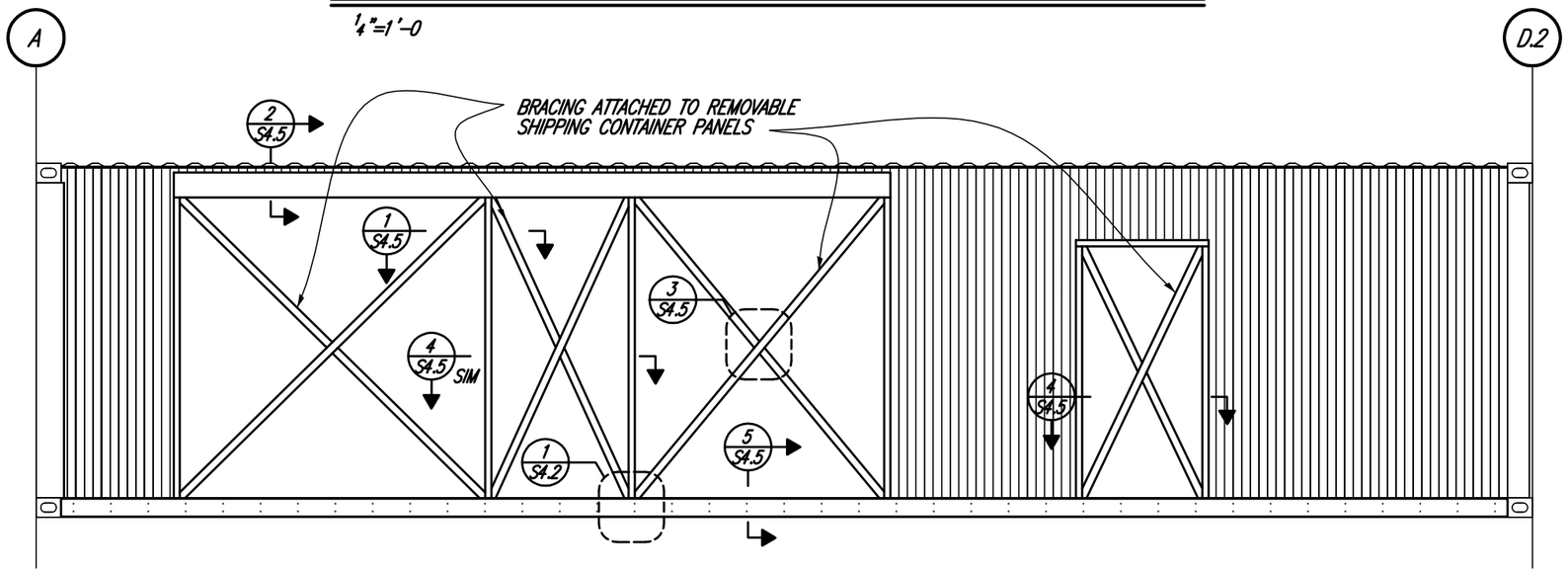

SHIPPING CONTAINER BRACING SOUTH ELEVATION

1/4"=1'-0

CONSULTING ENGINEERS
JVA, Incorporated 1319 Spruce Street
Boulder, CO 80302 Phone: 303.444.1951
Fax: 303.444.1957 E-mail: info@jvajva.com

Drawn by	Date
K. Rogne	August 7, 2007
Revised	Date

2007 Solar Decathlon

University of Colorado at Boulder
Civil, Environmental, and Architectural Engineering
428 UCB, Room ECCE 441
Boulder, CO 80309-0428

Shipping Container Elevations

*Scale as Noted
0 1' 2' 4' 8'

S-3.1

JACK PAD SCHEDULE

MARK	PLATE SIZE	A	B	C
P1.5	1'-6 x 1'-6 x 1/4"	1"	1"	3/8"
P2.0	2'-0 x 2'-0 x 1/4"	2"	1"	3/8"
P2.5	2'-6 x 2'-6 x 1/4"	3"	1"	3/8"

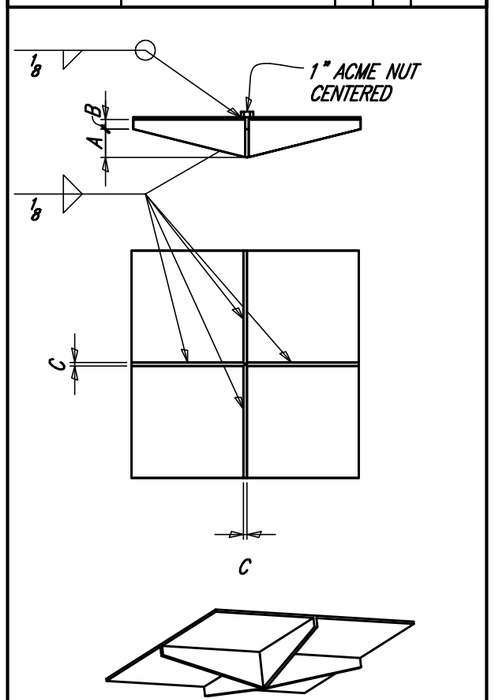

SIPS NAILING SCHEDULE

MARK	PLY/MEMBERS	DIM OF BEAM	SCREW/NAIL	SPACING
A	4-PLY 2x6 (OR 4-PLY LSL)	6x5 1/2	3/4x6 SDS	1 @ 16" STAGGERED BOTH SIDES
B	3-PLY LSL	5 1/4x5 1/2	10d COMMON	2 @ 6" STAGGERED BOTH SIDES
C	3-PLY 2x6	4 1/2x5 1/2	10d COMMON	1 @ 12" STAGGERED BOTH SIDES
D	2-PLY LSL (IN FLOORS)	3x5 1/2	10d COMMON	2 @ 6" STAGGERED
E	2-PLY 2x6 (IN FLOORS)	3x5 1/2	10d COMMON	2 @ 6" STAGGERED
F	2-PLY 2x6 (SPANS UNDER 10')	3x5 1/2	10d COMMON	2 @ 24" STAGGERED

* NOTE: BEAM TO OSB CONNECTION REQUIRES THE SAME SCREW LAYOUT

SCHEDULE 1/S4.0 N.S.

SCHEDULE 2/S4.0 N.S.

CONSULTING ENGINEERS
JVA, Incorporated 1319 Spruce Street
Boulder, CO 80302 Phone: 303.444.1951
Fax: 303.444.1957 E-mail: info@jvajva.com

Drawn by	Date
K. Rogne	August 7, 2007
Revised	Date

2007 Solar Decathlon

University of Colorado at Boulder
Civil, Environmental, and Architectural Engineering
428 UCB, Room ECCE 441
Boulder, CO 80309-0428

Schedules

*Scale as Noted

S-4.0

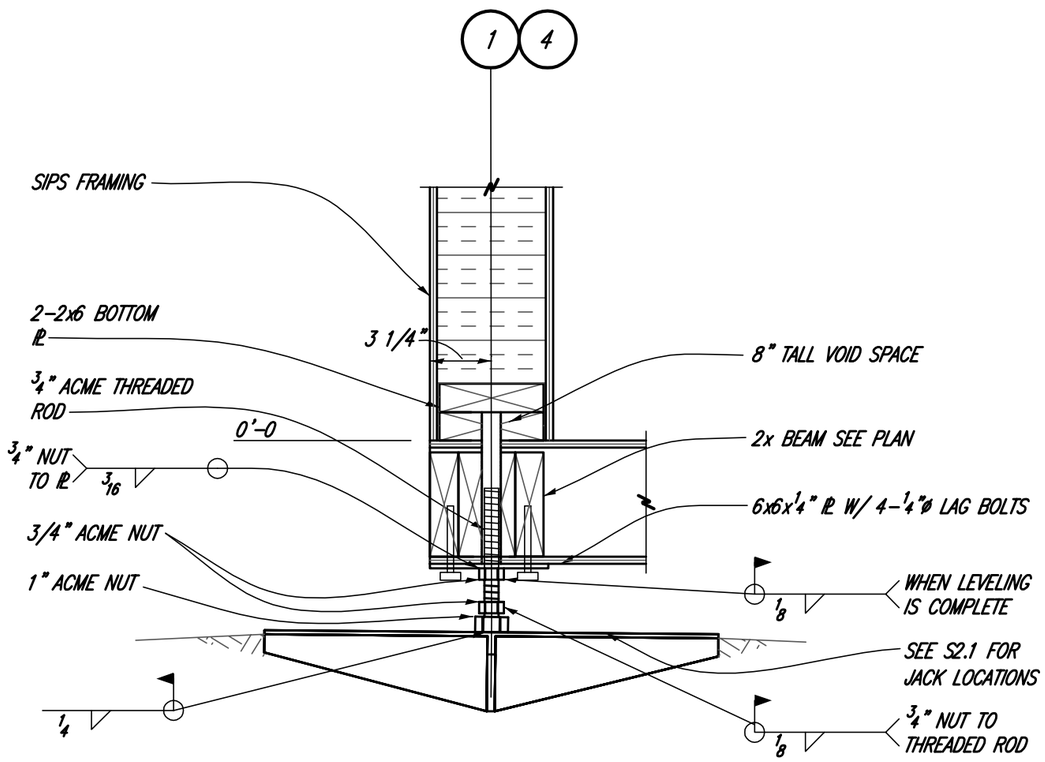

DETAIL 1/S4.1 1 1/2"=1'-0

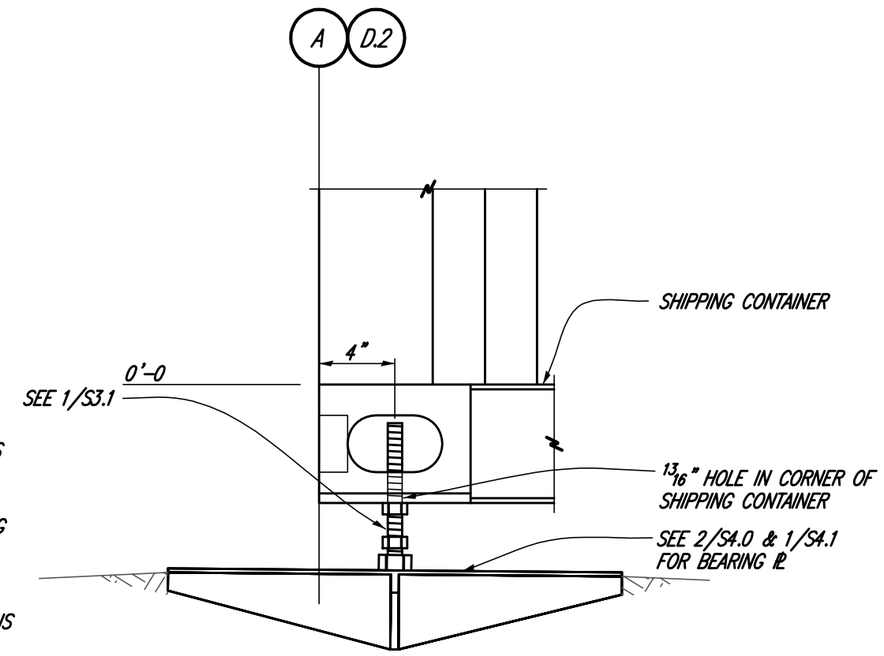

DETAIL 2/S4.1 1 1/2"=1'-0

GRAPHIC SCALE FOR 1-1/2" = 1'-0 DETAILS

0 3" 6" 1' 1'-6

CONSULTING ENGINEERS
JVA, Incorporated 1319 Spruce Street
Boulder, CO 80302 Phone: 303.444.1951
Fax: 303.444.1957 E-mail: info@jvajva.com

Drawn by	Date
K. Rogne	August 7, 2007
Revised	Date

2007 Solar Decathlon

University of Colorado at Boulder
Civil, Environmental, and Architectural Engineering
428 UCB, Room ECCE 441
Boulder, CO 80309-0428

Jack Pad Details

*Scale as Noted

0 3" 6" 1' 2'

S-4.1

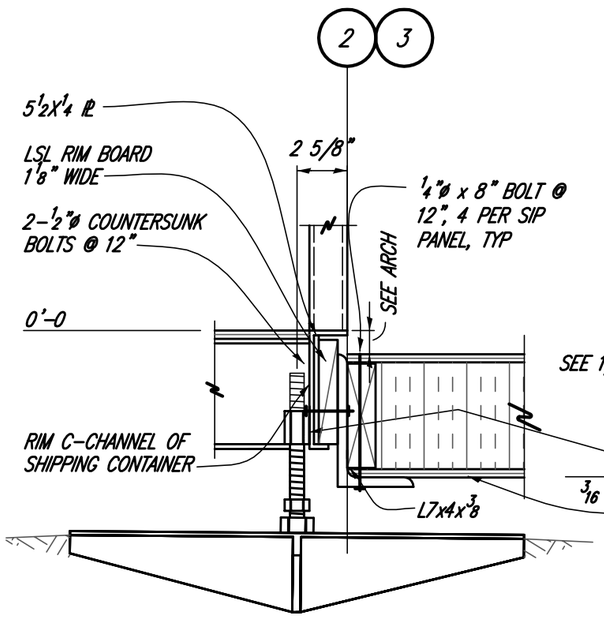

DETAIL 1/S4.2 1 1/2"=1'-0

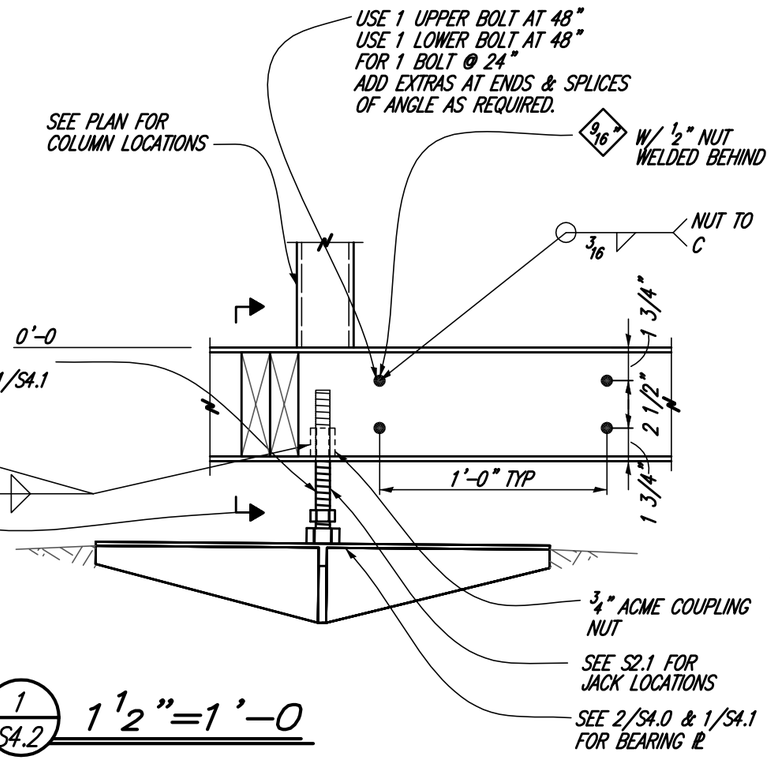

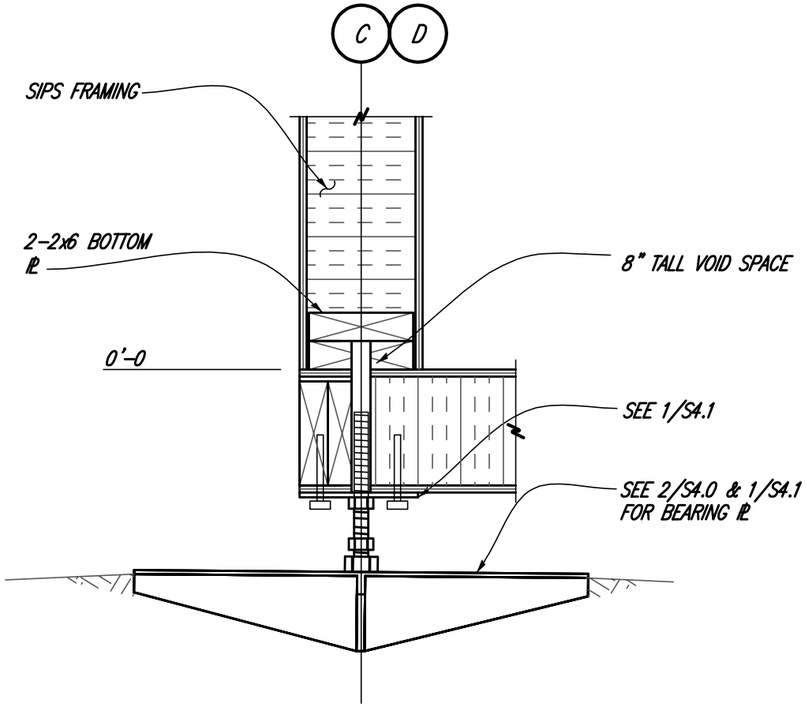

DETAIL 2/S4.2 1 1/2"=1'-0

GRAPHIC SCALE FOR 1-1/2" = 1'-0 DETAILS

0 3" 6" 1' 1'-6

JVA, Incorporated 1319 Spruce Street
Boulder, CO 80302 Phone: 303.444.1951
Fax: 303.444.1957 E-mail: info@jvajva.com

Drawn by	Date
K. Rogne	August 7, 2007
Revised	Date

2007 Solar Decathlon

University of Colorado at Boulder
Civil, Environmental, and Architectural Engineering
428 UCB, Room ECCE 441
Boulder, CO 80309-0428

Jack Plate Details

*Scale as Noted

0 3" 6" 1' 2'

S-4.2

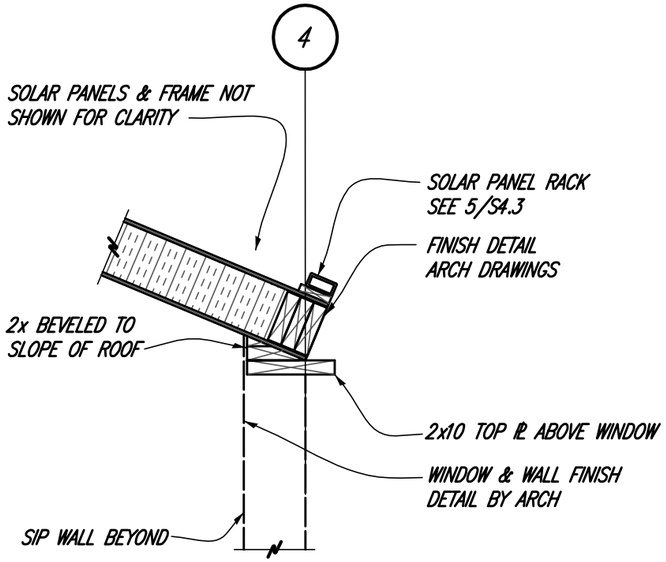

DETAIL 4/S4.3 3/4"=1'-0

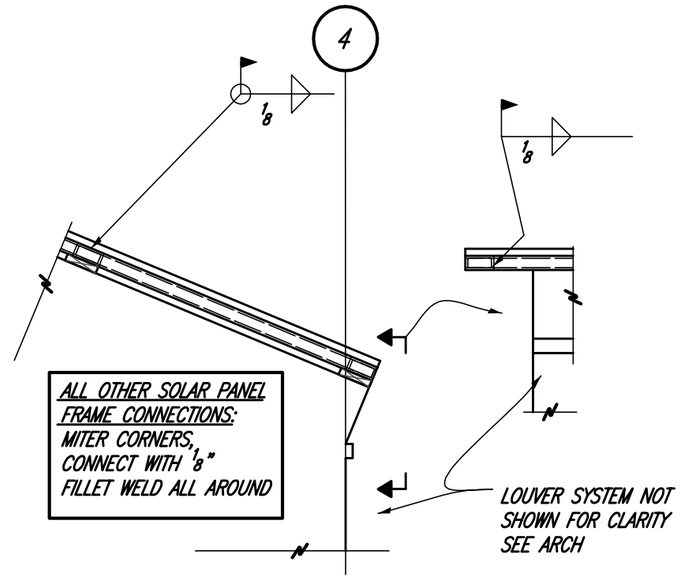

DETAIL 5/S4.3 3/4"=1'-0

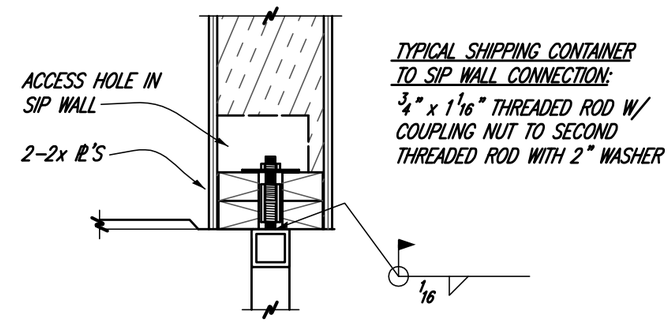

DETAIL 6/S4.3 1 1/2"=1'-0

GRAPHIC SCALE FOR 3/4" = 1'-0 DETAILS

0 6" 1' 2' 3'

GRAPHIC SCALE FOR 1-1/2" = 1'-0 DETAILS

0 3" 6" 1' 1'-6

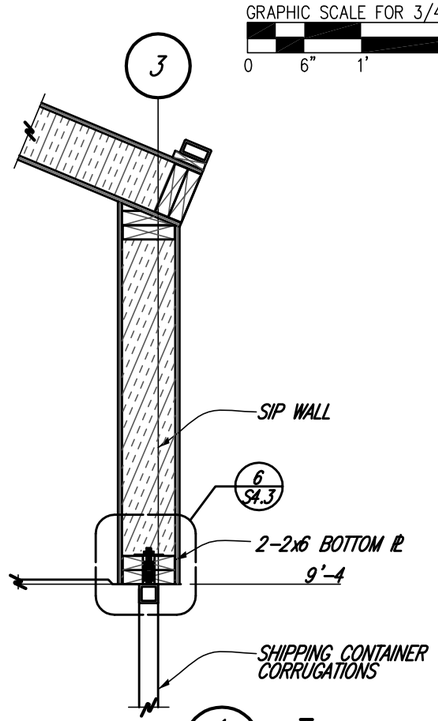

DETAIL 1/S4.3 3/4"=1'-0

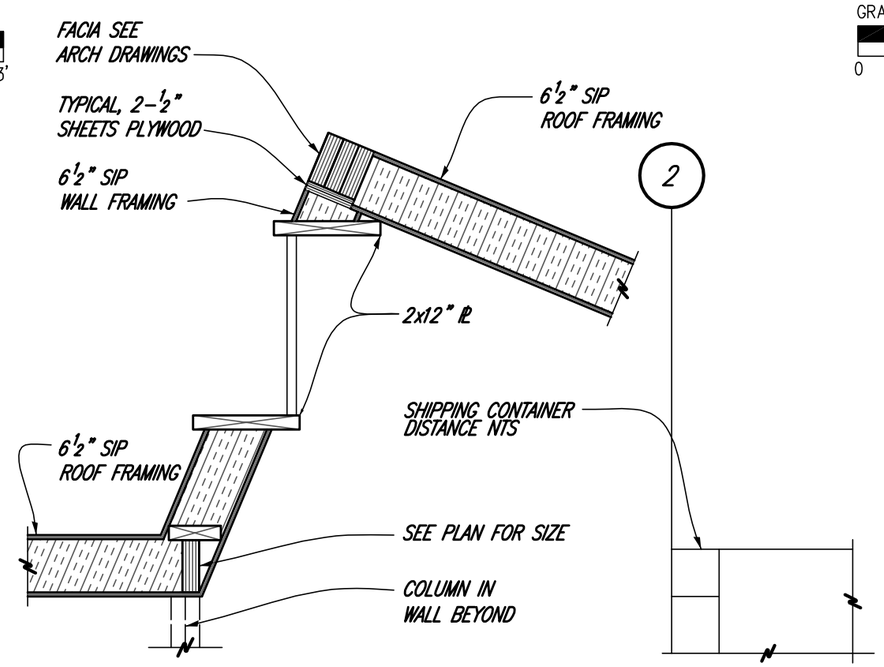

DETAIL 2/S4.3 3/4"=1'-0

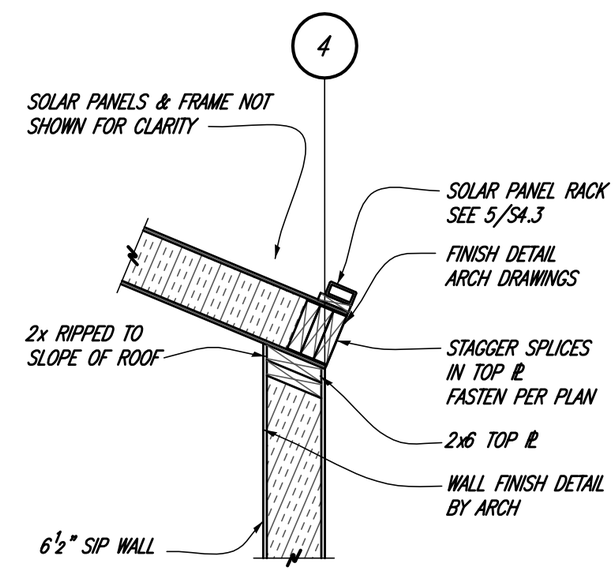

DETAIL 3/S4.3 3/4"=1'-0

JVA, Incorporated 1319 Spruce Street
Boulder, CO 80302 Phone: 303.444.1951
Fax: 303.444.1957 E-mail: info@jvajva.com

Drawn by	Date
K. Rogne	August 7, 2007
Revised	Date

2007 Solar Decathlon

Details

University of Colorado at Boulder
Civil, Environmental, and Architectural Engineering
428 UCB, Room ECCE 441
Boulder, CO 80309-0428

*Scale as Noted

0 6" 1" 2' 4'

S-4.3

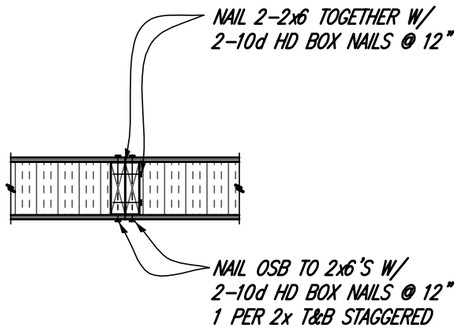

TYPICAL FLOOR SPLINE

DETAIL 4/S4.4 3/4"=1'-0

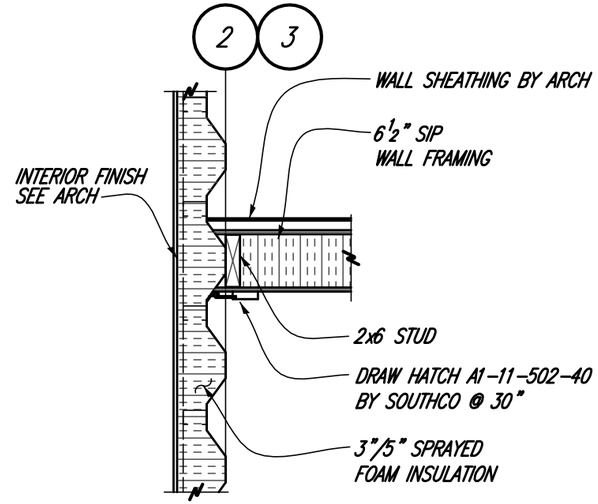

SHIPPING CONTAINER TO SIP CONNECTION

DETAIL 5/S4.4 3/4"=1'-0

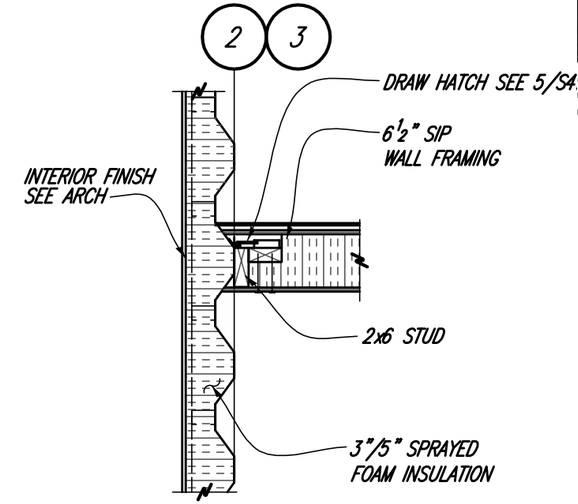

INSET SHIPPING CONTAINER TO SIP CONNECTION

DETAIL 6/S4.4 3/4"=1'-0

GRAPHIC SCALE FOR 3/4" = 1'-0 DETAILS

0 6" 1' 2' 3'

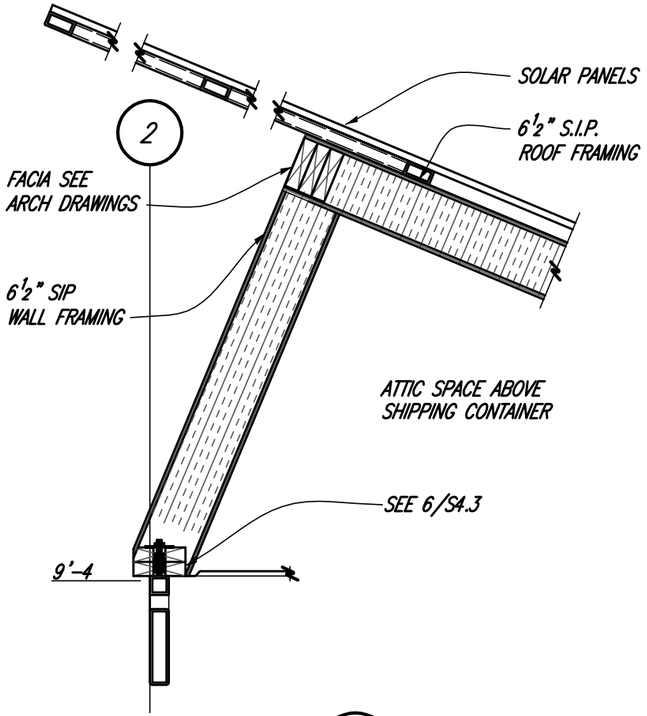

DETAIL 1/S4.4 3/4"=1'-0

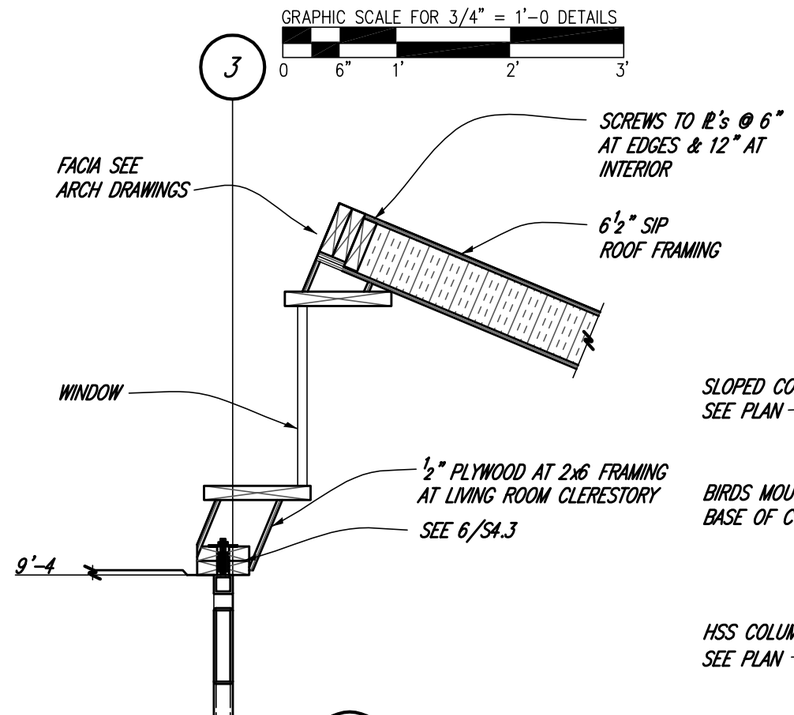

DETAIL 2/S4.4 3/4"=1'-0

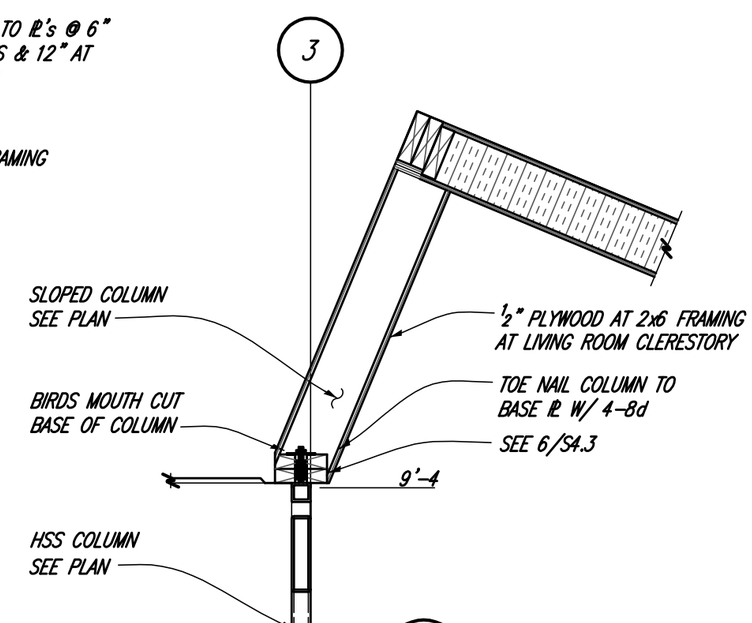

DETAIL 3/S4.4 3/4"=1'-0

JVA, Incorporated 1319 Spruce Street
Boulder, CO 80302 Phone: 303.444.1951
Fax: 303.444.1957 E-mail: info@jvajva.com

Drawn by	Date
K. Rogne	August 7, 2007
Revised	Date

2007 Solar Decathlon

University of Colorado at Boulder
Civil, Environmental, and Architectural Engineering
428 UCB, Room ECCE 441
Boulder, CO 80309-0428

Details

*Scale as Noted

0 6" 1" 2' 4'

S-4.4

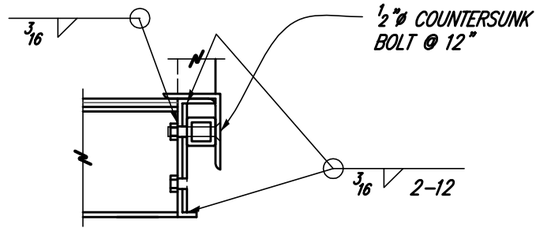

BOTTOM C-CHANNEL AT SHIPPING CONDITION

DETAIL 5/S4.5 1 1/2"=1'-0

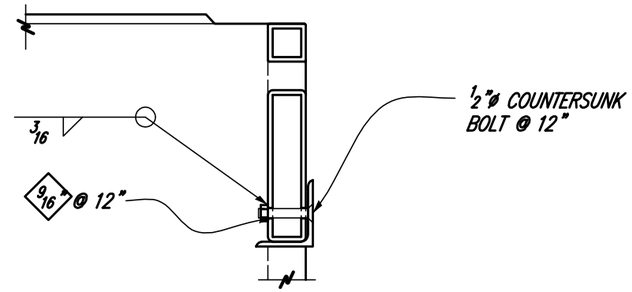

HSS BEAM AT SHIPPING CONDITION

DETAIL 6/S4.5 1 1/2"=1'-0

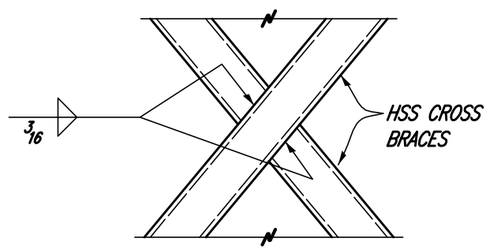

DETAIL 3/S4.5 1 1/2"=1'-0

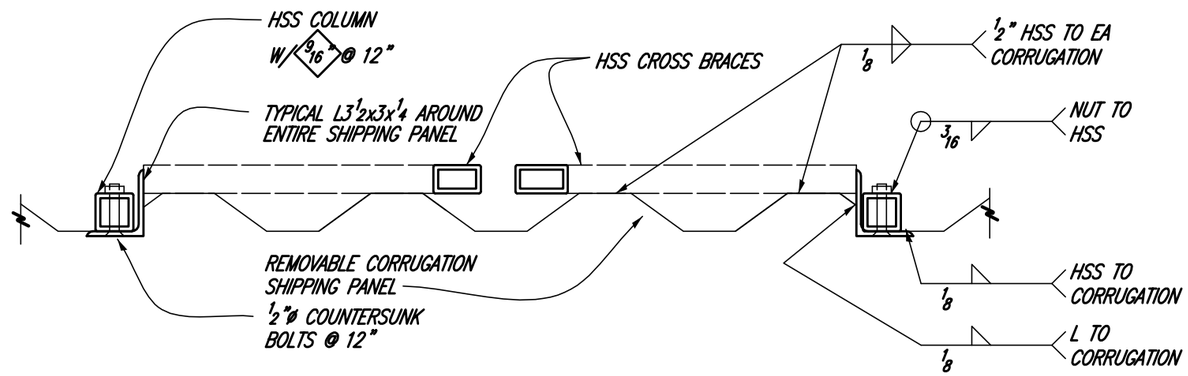

DETAIL 4/S4.5 1 1/2"=1'-0

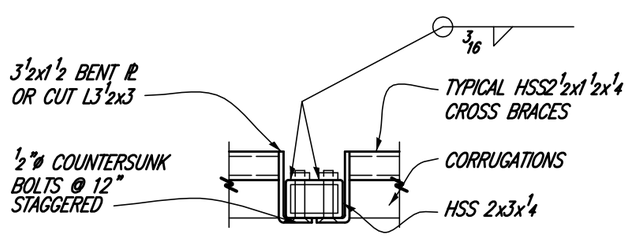

DETAIL 1/S4.5 1 1/2"=1'-0

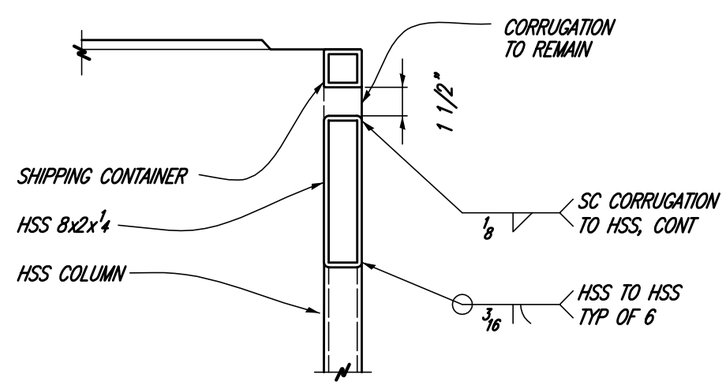

HSS BEAM AT COLUMN

DETAIL 2/S4.5 1 1/2"=1'-0

GRAPHIC SCALE FOR 1-1/2" = 1'-0 DETAILS

0 3" 6" 1' 1' 6

JVA, Incorporated 1319 Spruce Street
Boulder, CO 80302 Phone: 303.444.1951
Fax: 303.444.1957 E-mail: info@jvajva.com

Drawn by	Date
K. Rogne	August 7, 2007
Revised	Date

2007 Solar Decathlon

University of Colorado at Boulder
Civil, Environmental, and Architectural Engineering
428 UCB, Room ECCE 441
Boulder, CO 80309-0428

Details

*Scale as Noted

0 3" 6" 1' 2'

S-4.5

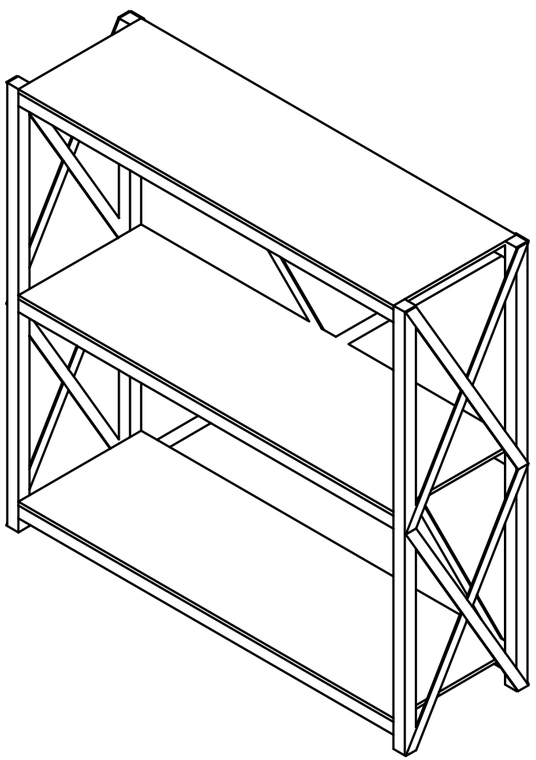

DETAIL 1/S4.6 1/2"=1'-0

BATTERY RACK ISOMETRIC VIEW

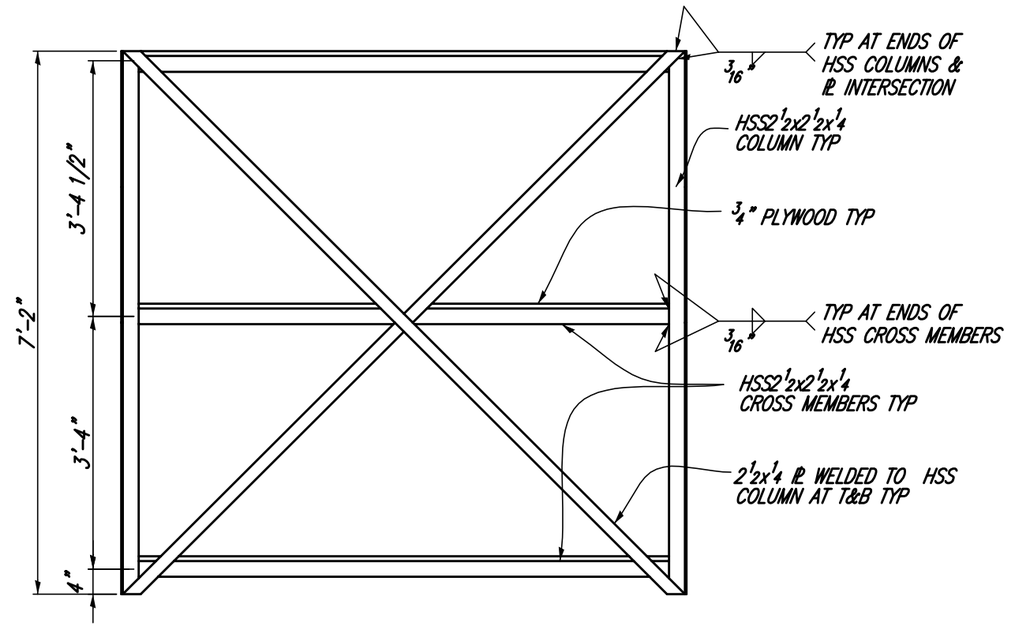

DETAIL 3/S4.6 1/2"=1'-0

BATTERY RACK REAR ELEVATION

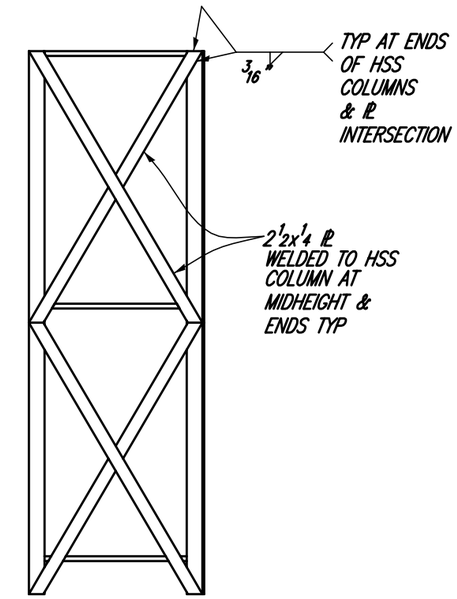

DETAIL 4/S4.6 1/2"=1'-0

BATTERY RACK SIDE ELEVATION, TYP.

GRAPHIC SCALE FOR 1/2" = 1'-0 DETAILS

0 6" 1' 2' 4'

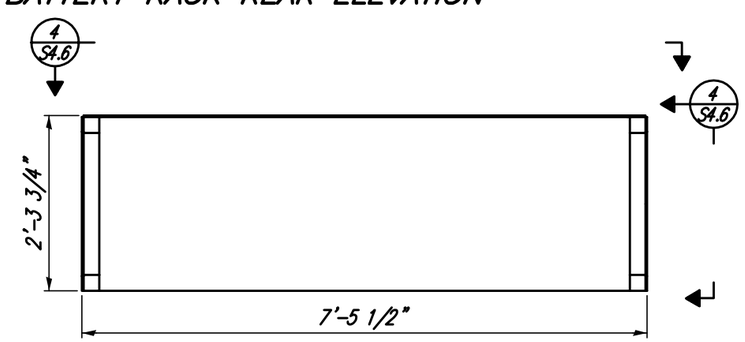

DETAIL 2/S4.6 1/2"=1'-0

BATTERY RACK PLAN VIEW

JVA, Incorporated 1319 Spruce Street
Boulder, CO 80302 Phone: 303.444.1951
Fax: 303.444.1957 E-mail: info@jvajva.com

Drawn by	Date
K. Ronge	August 7, 2007
Revised	Date

Battery Rack Details and Elevations

2007 Solar Decathlon

University of Colorado at Boulder
Civil, Environmental, and Architectural Engineering
428 UCB, Room ECCE 441
Boulder, CO 80309-0428

*Scale as Noted 0 6" 1" 2' 4'

S-4.6

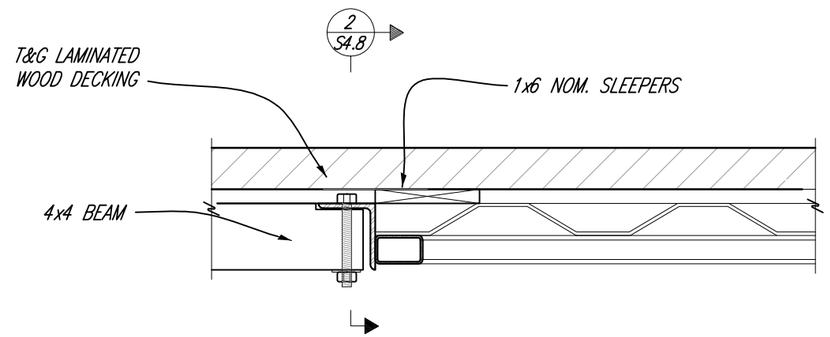

SECTION 3/S4.7 1 1/2"=1'-0

0 3" 6" 1' 1'-6

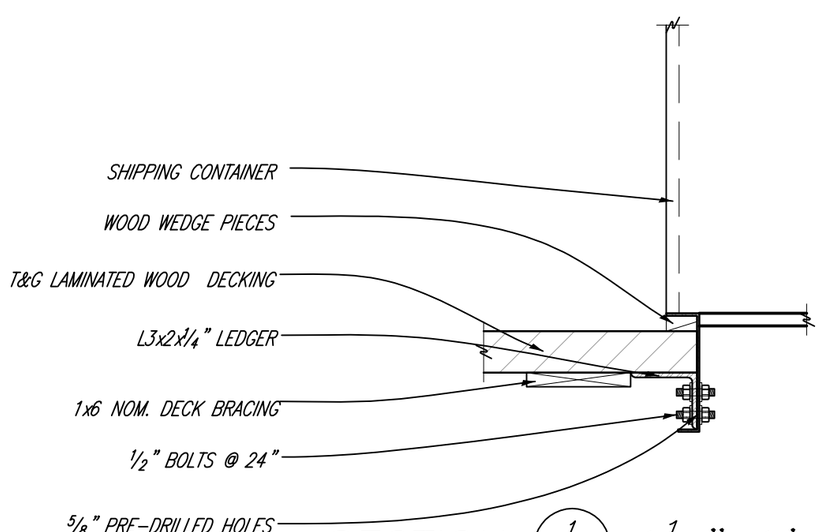

SECTION 1/S4.7 1 1/2"=1'-0

0 3" 6" 1' 1'-6

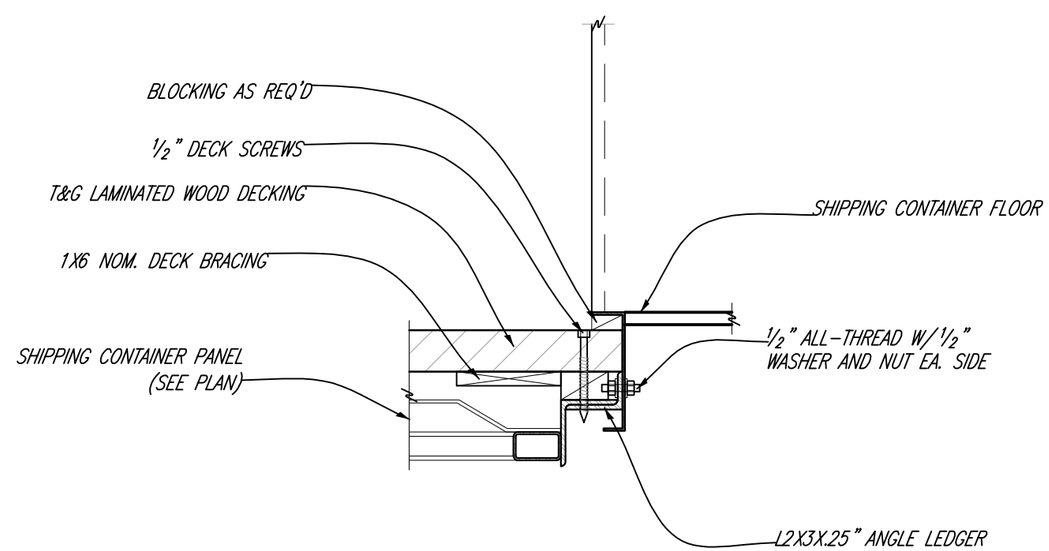

SECTION 2/S4.7 1 1/2"=1'-0

0 3" 6" 1' 1'-6

Drawn by	Date
K. Beegles	August 7, 2007
Revised	Date

2007 Solar Decathlon

University of Colorado at Boulder

Civil, Environmental, and Architectural Engineering
428 UCB, Room ECCE 441
Boulder, CO 80309-0428

Deck Framing Details

0 3" 6" 1' 2'

S4.7

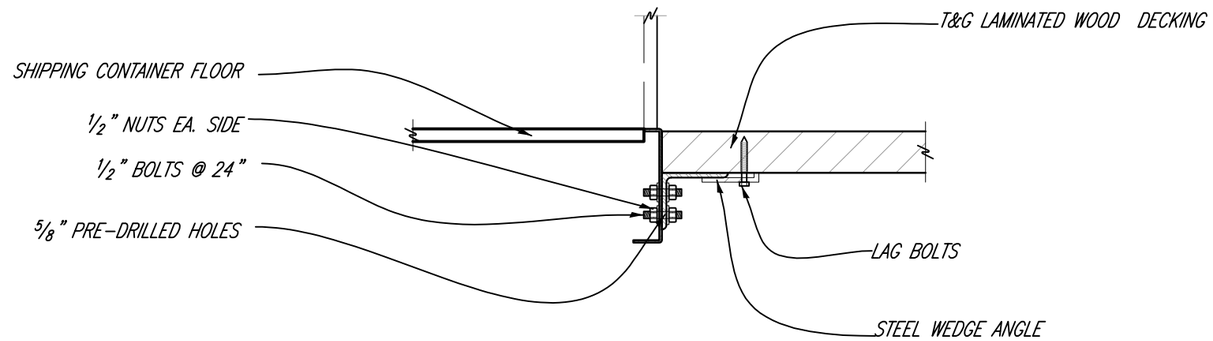

SECTION 1/S4.8 1 1/2"=1'-0

0 3" 6" 1' 1'-6

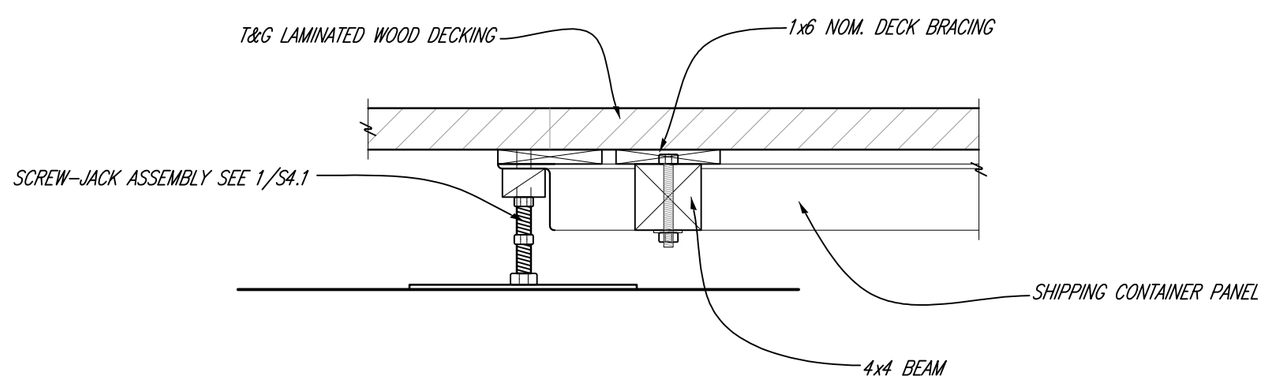

SECTION 2/S4.8 1 1/2"=1'-0

0 3" 6" 1' 1'-6

Drawn by	Date
K. Beegles	August 7, 2007
Revised	Date

2007 Solar Decathlon

University of Colorado at Boulder

Civil, Environmental, and Architectural Engineering
428 UCB, Room ECCE 441
Boulder, CO 80309-0428

Deck Framing Details

0 3" 6" 1' 2'

S4.8

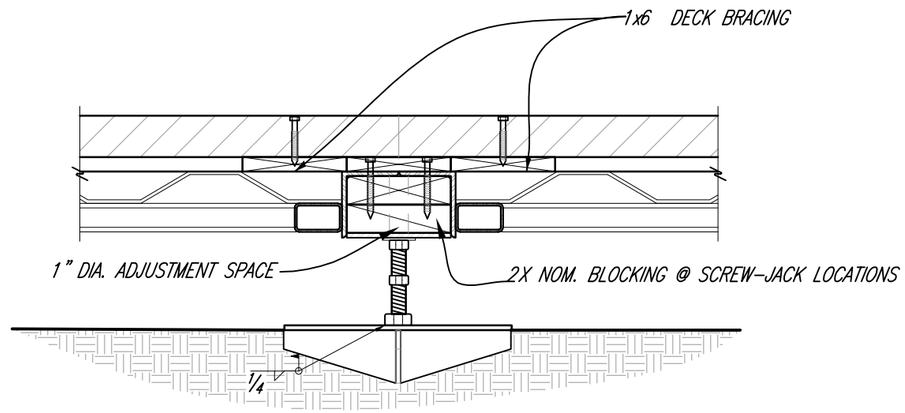

SECTION 1/S4.9 1 1/2"=1'-0

0 3" 6" 1' 1'-6

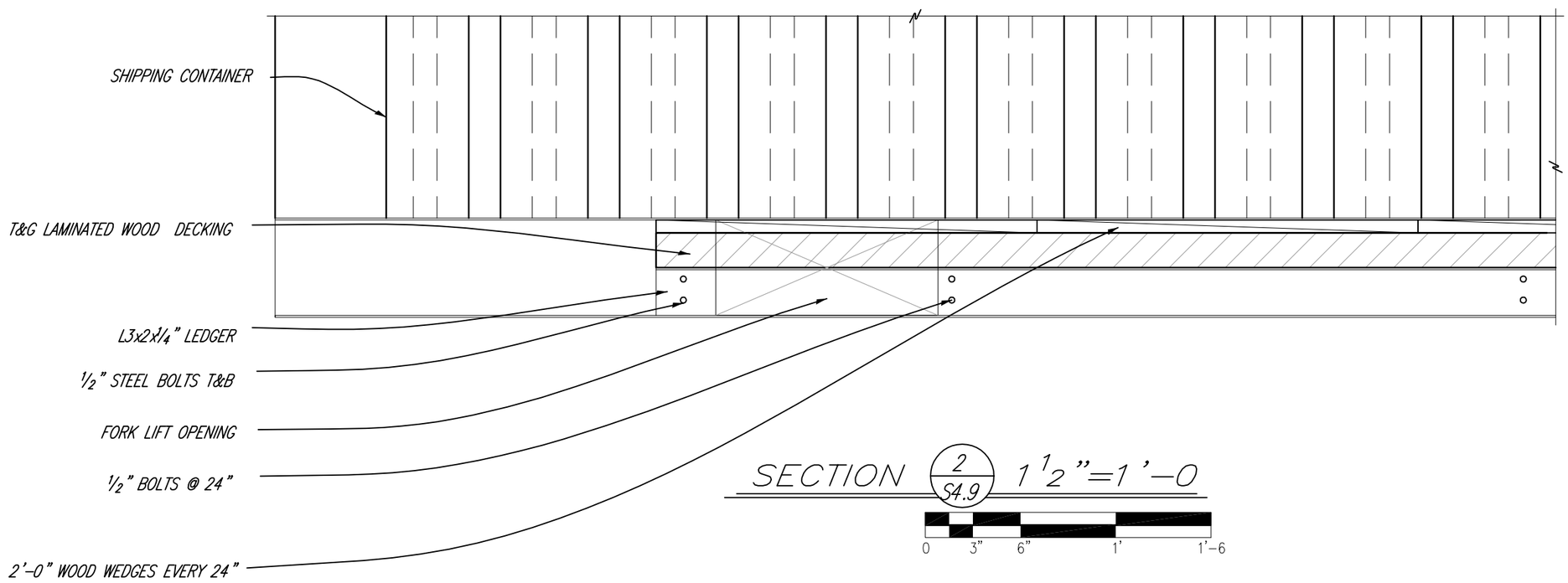

SECTION 2/S4.9 1 1/2"=1'-0

0 3" 6" 1' 1'-6

Drawn by	Date
K. Beegles	August 7, 2007
Revised	Date

2007 Solar Decathlon

Deck Framing Details

University of Colorado at Boulder
Civil, Environmental, and Architectural Engineering
428 UCB, Room ECCE 441
Boulder, CO 80309-0428

S4.9

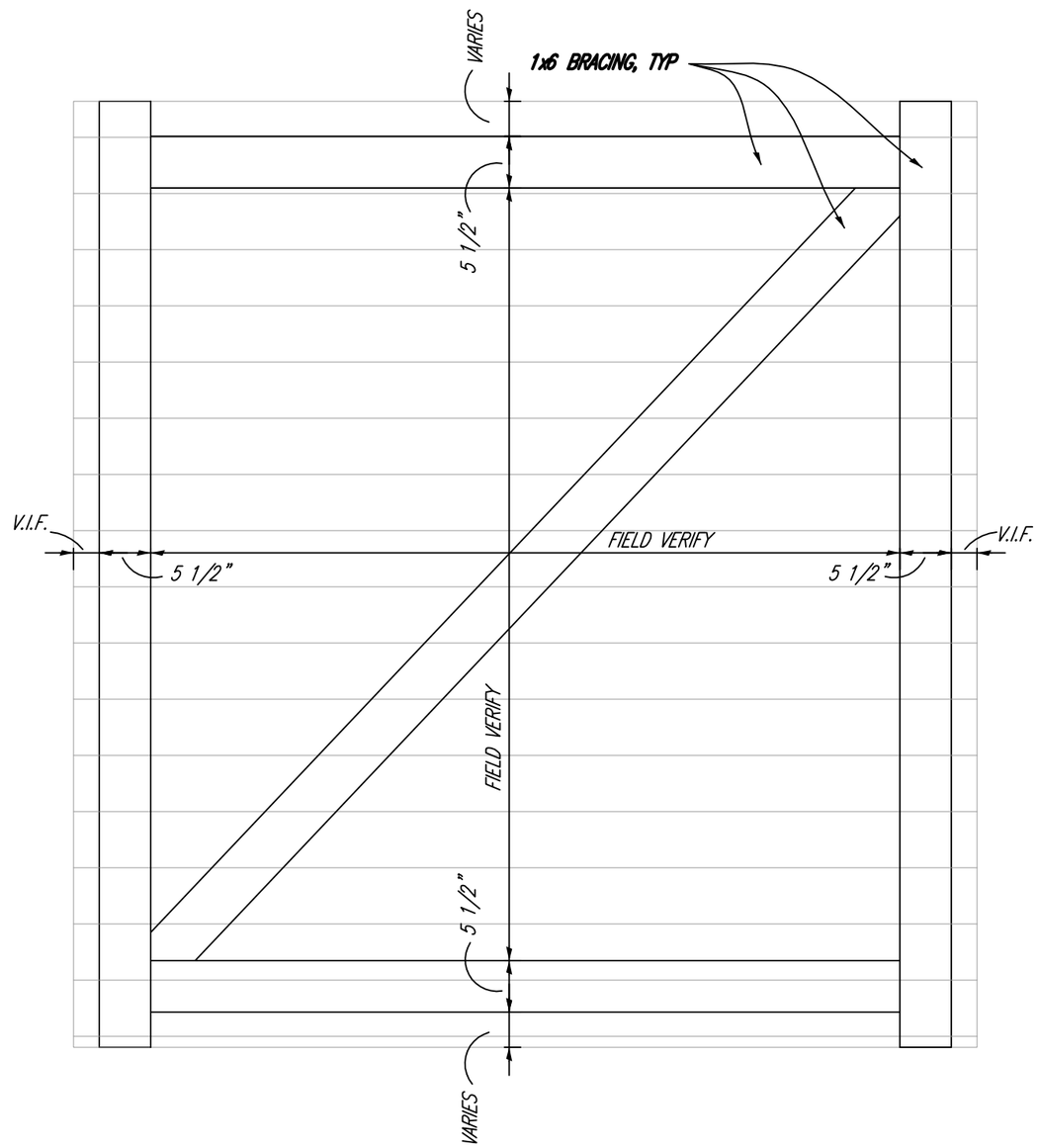

DETAIL 1/S4.10 3/4"=1'-0

Drawn by K. Beegles
Date August 7, 2007
Revised
Date

2007 Solar Decathlon

University of Colorado at Boulder
Civil, Environmental, and Architectural Engineering
428 UCB, Room ECCE 441
Boulder, CO 80309-0428

Deck Framing Details

0 3" 6" 1' 2'

S4.10

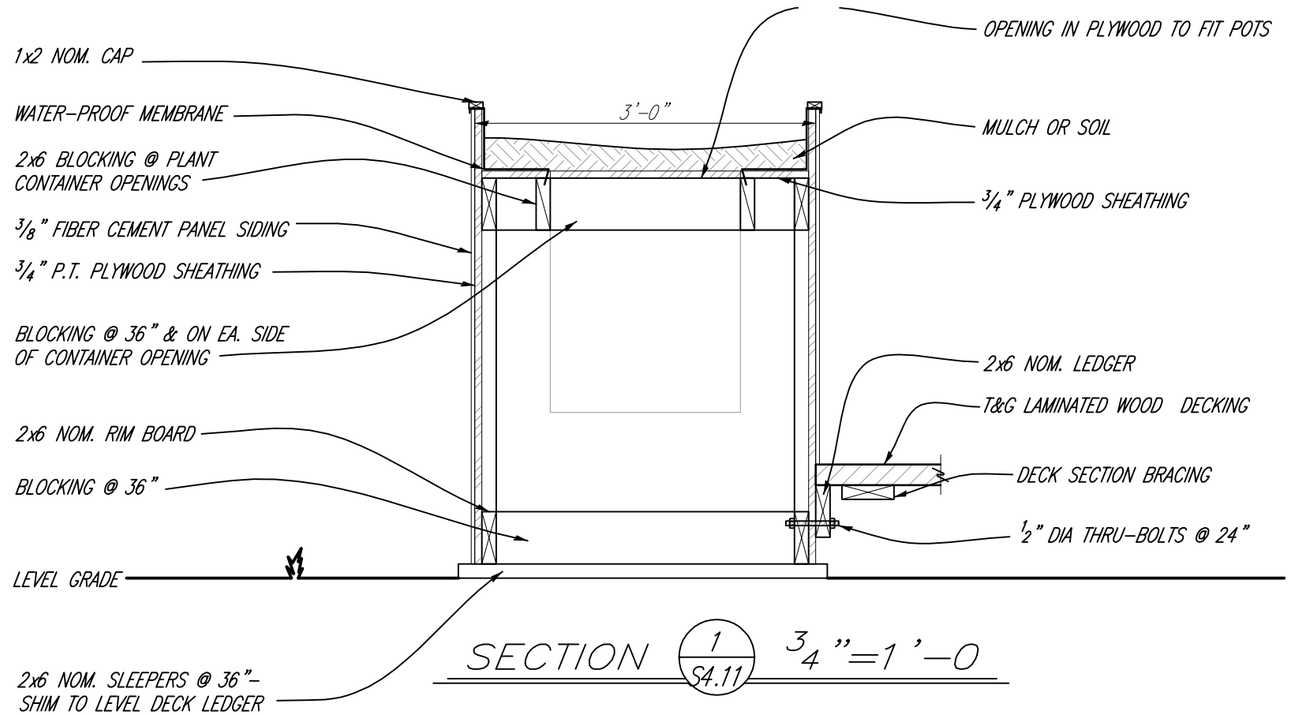

SECTION 1/S4.11 3/4"=1'-0

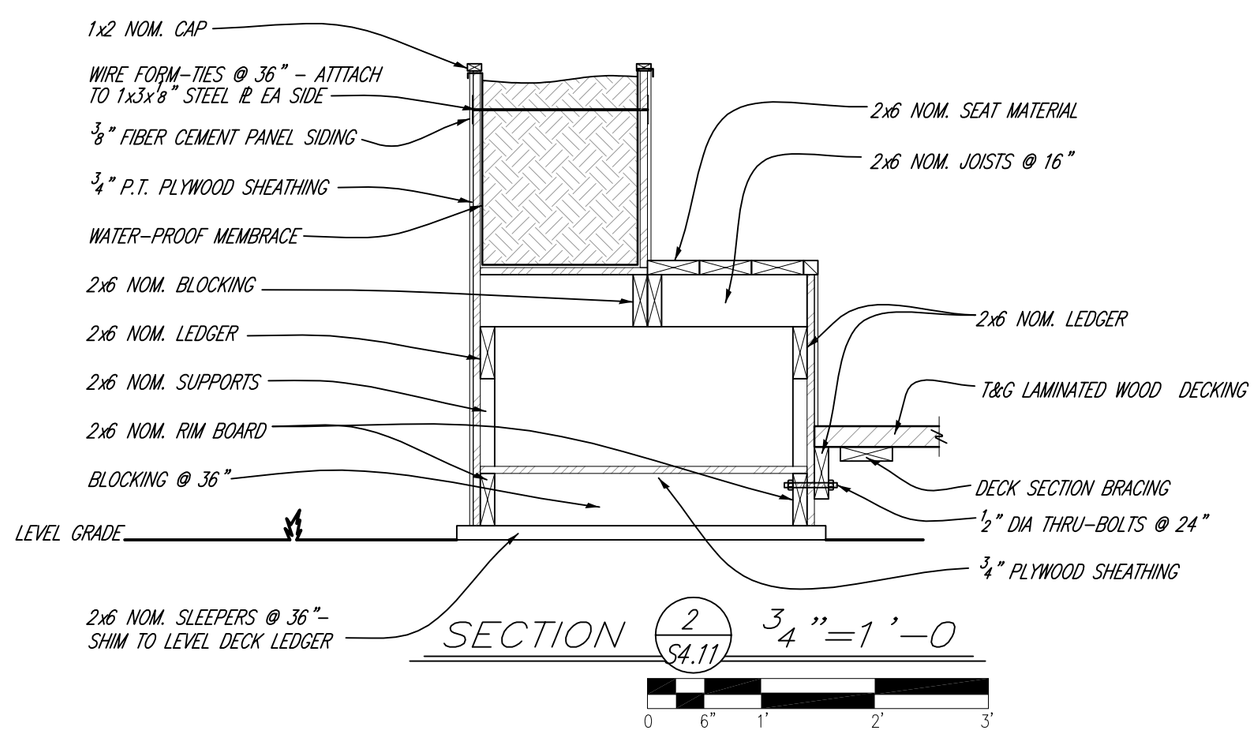

SECTION 2/S4.11 3/4"=1'-0

Drawn by	Date
K. Beegles	August 7, 2007
Revised	Date

2007 Solar Decathlon

University of Colorado at Boulder
Civil, Environmental, and Architectural Engineering
428 UCB, Room ECCE 441
Boulder, CO 80309-0428

Deck Framing Details

0 6" 1' 2' 4'

S4.11

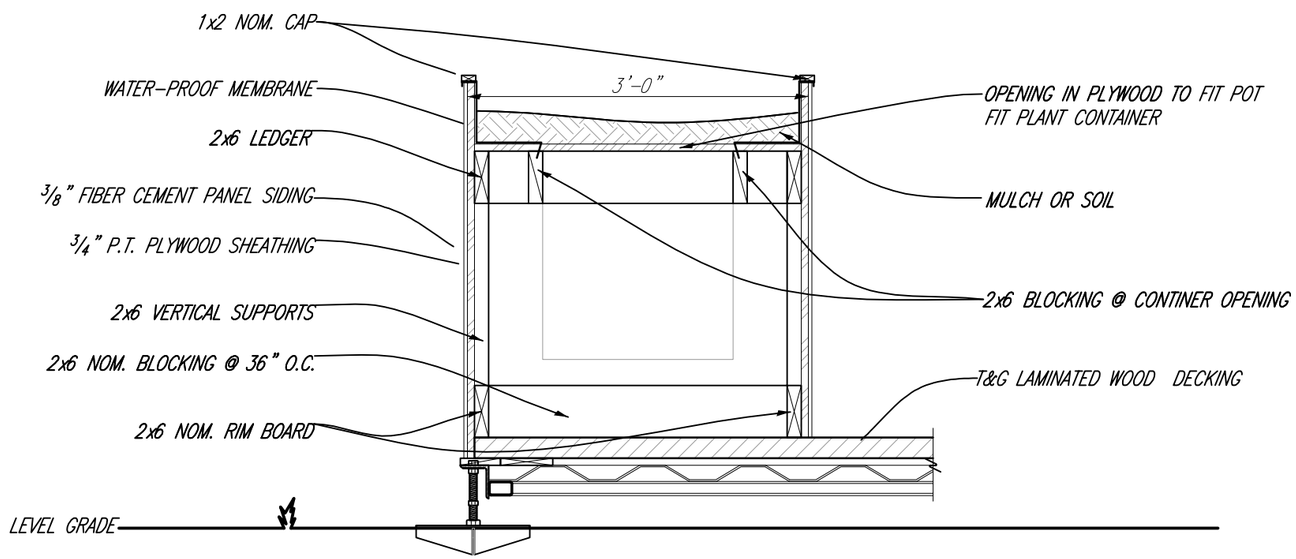

SECTION 1/S4.12 3/4"=1'-0

0 6" 1' 2'

Drawn by	Date
K. Beegles	August 7, 2007
Revised	Date

2007 Solar Decathlon

Deck Framing Details

University of Colorado at Boulder
Civil, Environmental, and Architectural Engineering
428 UCB, Room ECCE 441
Boulder, CO 80309-0428

0 6" 1' 2' 4'

S4.12

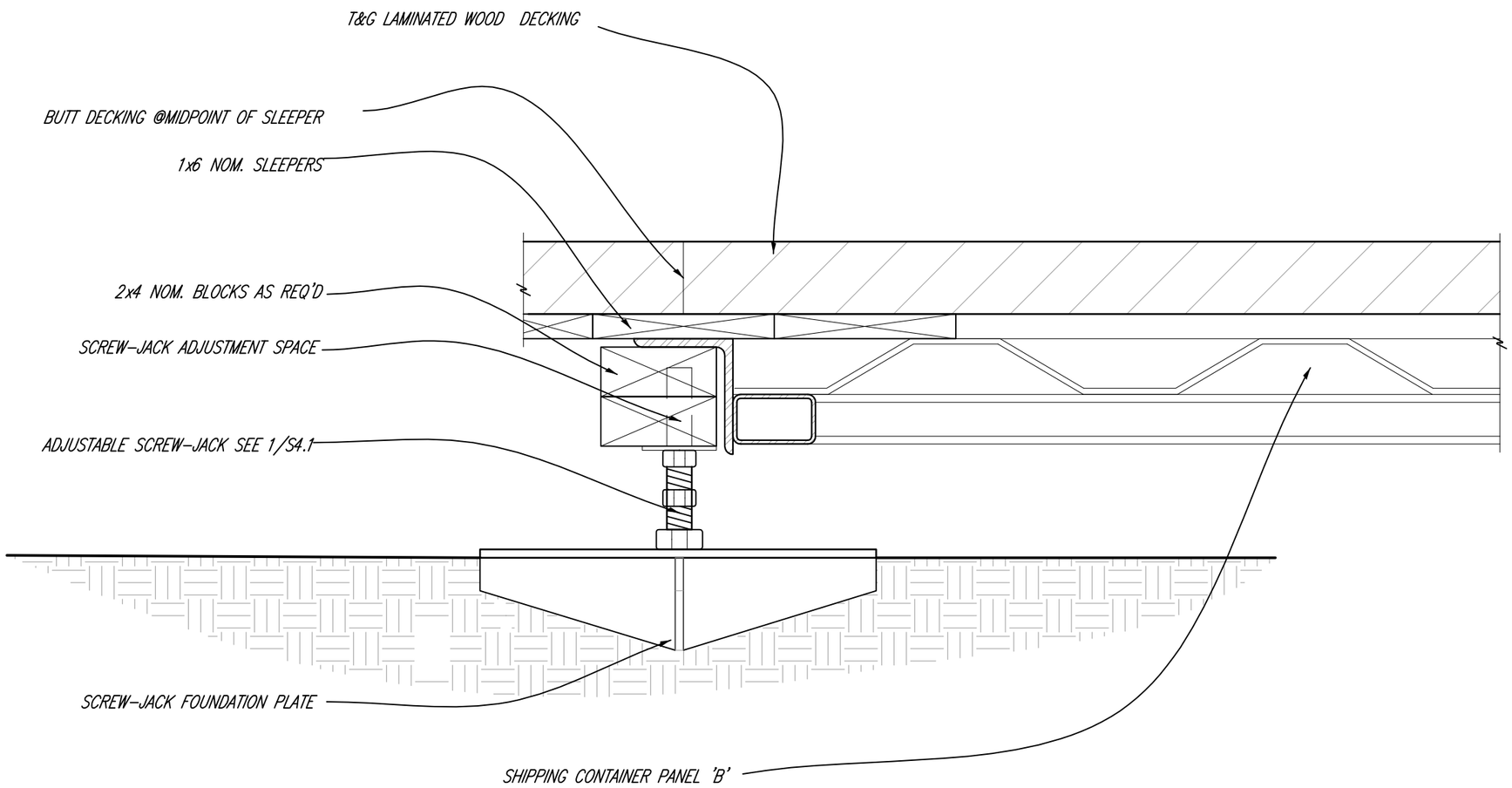

SECTION 1/S4.13 3"=1'-0

0 1" 2" 3" 6" 1'-0

Drawn by	Date
K. Beegles	August 7, 2007
Revised	Date

2007 Solar Decathlon

University of Colorado at Boulder

Civil, Environmental, and Architectural Engineering
428 UCB, Room ECCE 441
Boulder, CO 80309-0428

Deck Framing Details

0 1.5' 3' 6' 1'

S4.13

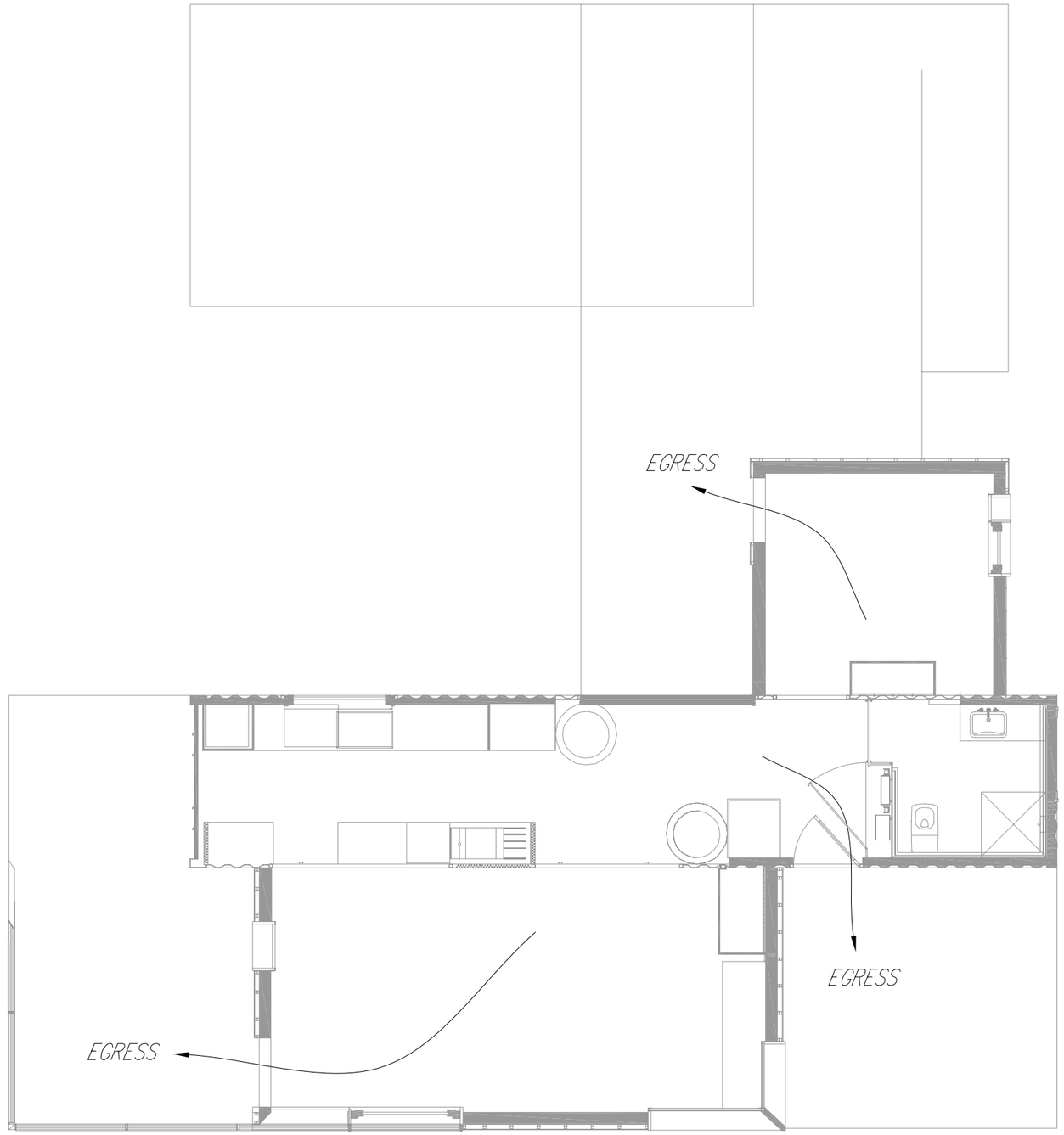

1 EGRESS PLAN
N.T.S.

Drawn by	Date
C.Corbin	August 7, 2007
Revised	Date

2007 Solar Decathlon

University of Colorado at Boulder
Civil, Environmental, and Architectural Engineering
428 UCB, Room ECCE 441
Boulder, CO 80309-0428

Egress Plan

F1.01

LEGEND

FE	FIRE EXTINGUISHER
SD	SMOKE DETECTOR

NOTE: SEE XX.XX FOR GARAGE FIRE EXTINGUISHER LOCATION

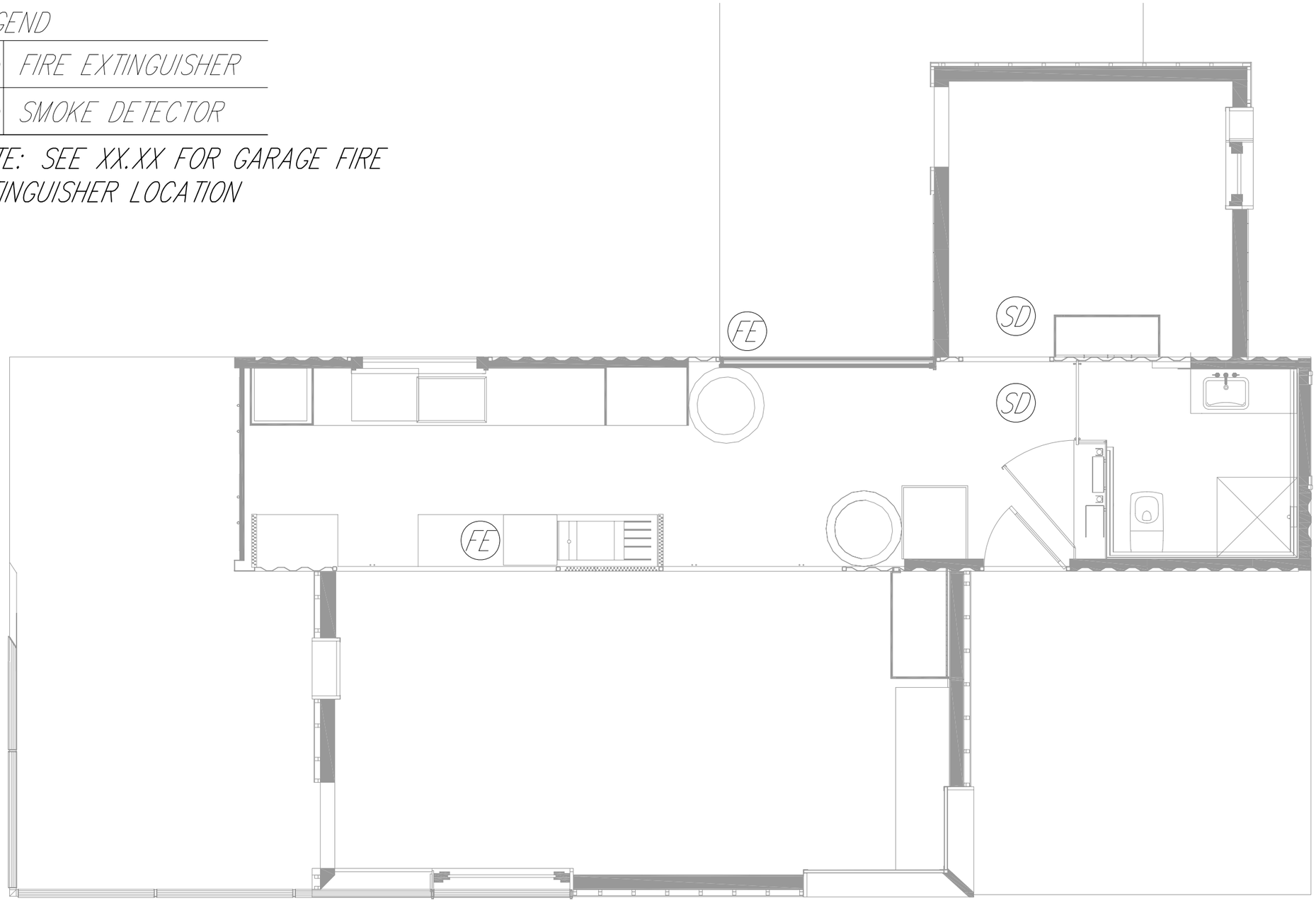

1 FIRE PROTECTION PLAN
1/4" – 1'-0"

Drawn by	Date
C.Corbin	August 7, 2007
Revised	Date

2007 Solar Decathlon

Fire Protection Plan

University of Colorado at Boulder
Civil, Environmental, and Architectural Engineering
428 UCB, Room ECCE 441
Boulder, CO 80309-0428

0 1' 2' 4' 8'

F1.11

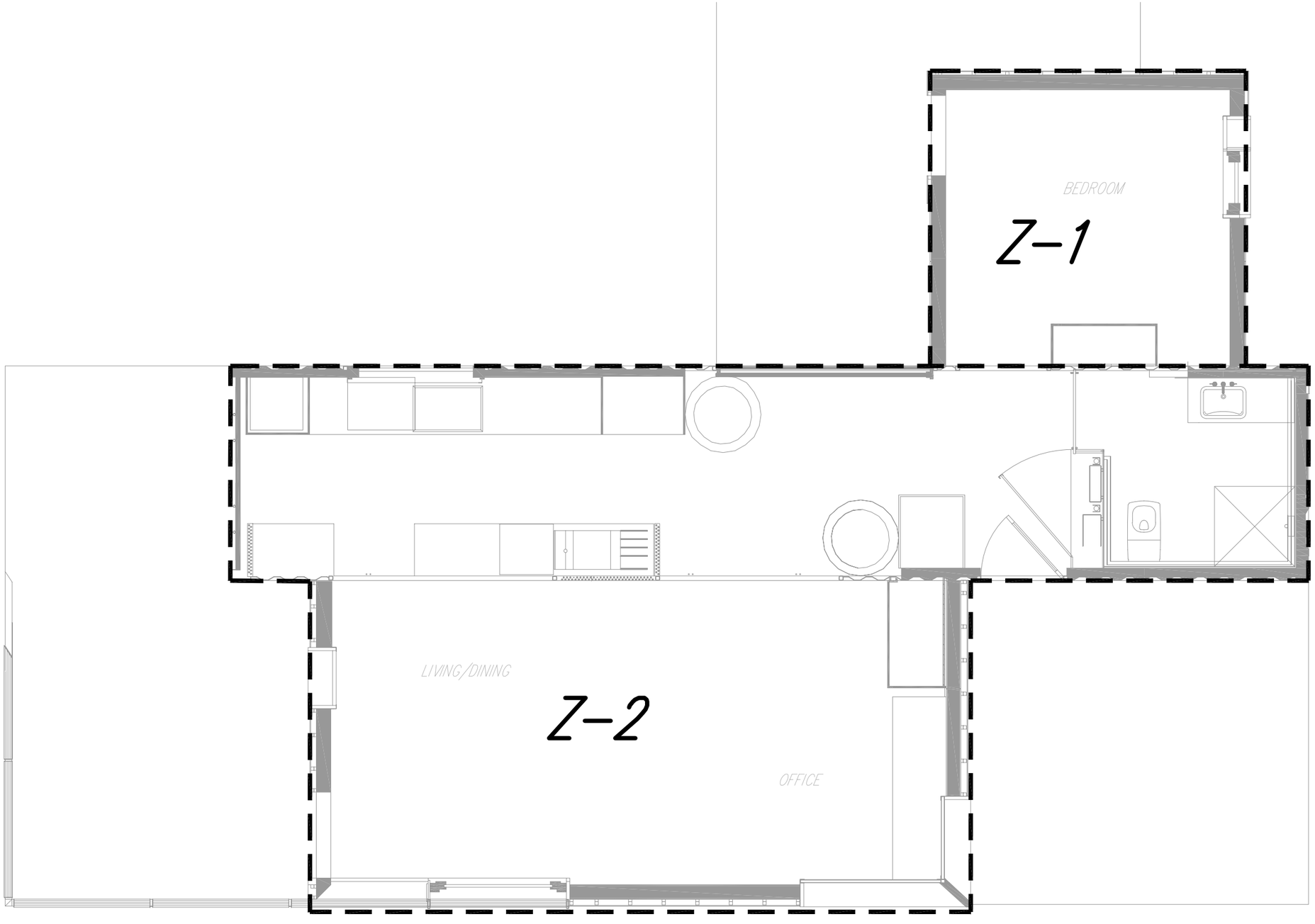

1 HVAC ZONING PLAN
N.T.S.

Drawn by	Date
C. Corbin	August 7, 2007
Revised	Date

2007 Solar Decathlon

University of Colorado at Boulder
Civil, Environmental, and Architectural Engineering
428 UCB, Room ECCE 441
Boulder, CO 80309-0428

HVAC Zoning Plan

M1.01

SPECIFIC NOTES:

1. PROVIDE JET DIFFUSER INSTALLATION FOR FUTURE USE. CLOSE OFF DAMPER FOR COMPETITION. COORDINATE DIFFUSER LOCATION WITH ARCHITECTURAL CEILING.
2. COORDINATE DIFFUSER LOCATION WITH ARCHIETCTURAL CEILING.
3. PROVIDE SUPPLY FAN INSTALLATION IN LOCATION ABOVE REFRIGERATIOR.
4. SUPPLY FAN RETURN AIR DUCT OPEN TO CEILING PLENUM. COVER DUCT OPENING WITH SIZE GALVANIZED WIRE MESH.
5. PROVIDE CUSTOM FAN COIL INSTALLATION IN LOCATION INDICATED. MOUNT FAN COIL WITHIN CEILING PLENUM. SEE DRAWING M6.05.
6. BATHROOM EXHAUST FAN RETURN AIR DUCT OPEN TO CEILING PLENUM. COVER DUCT OPENING WITH SIZE GALVANIZED WIRE MESH.
7. PROVIDE CUSTOM KITCHEN VENTILATION SYSTEM IN LOCATION SHOWN. FAN SHALL BE RATED FOR GREASE LADEN VAPOR. PROVIDE LOUVERED SHUTTER ON NORTH WALL. PROVIDE INTERMITTENT SWITCHING.

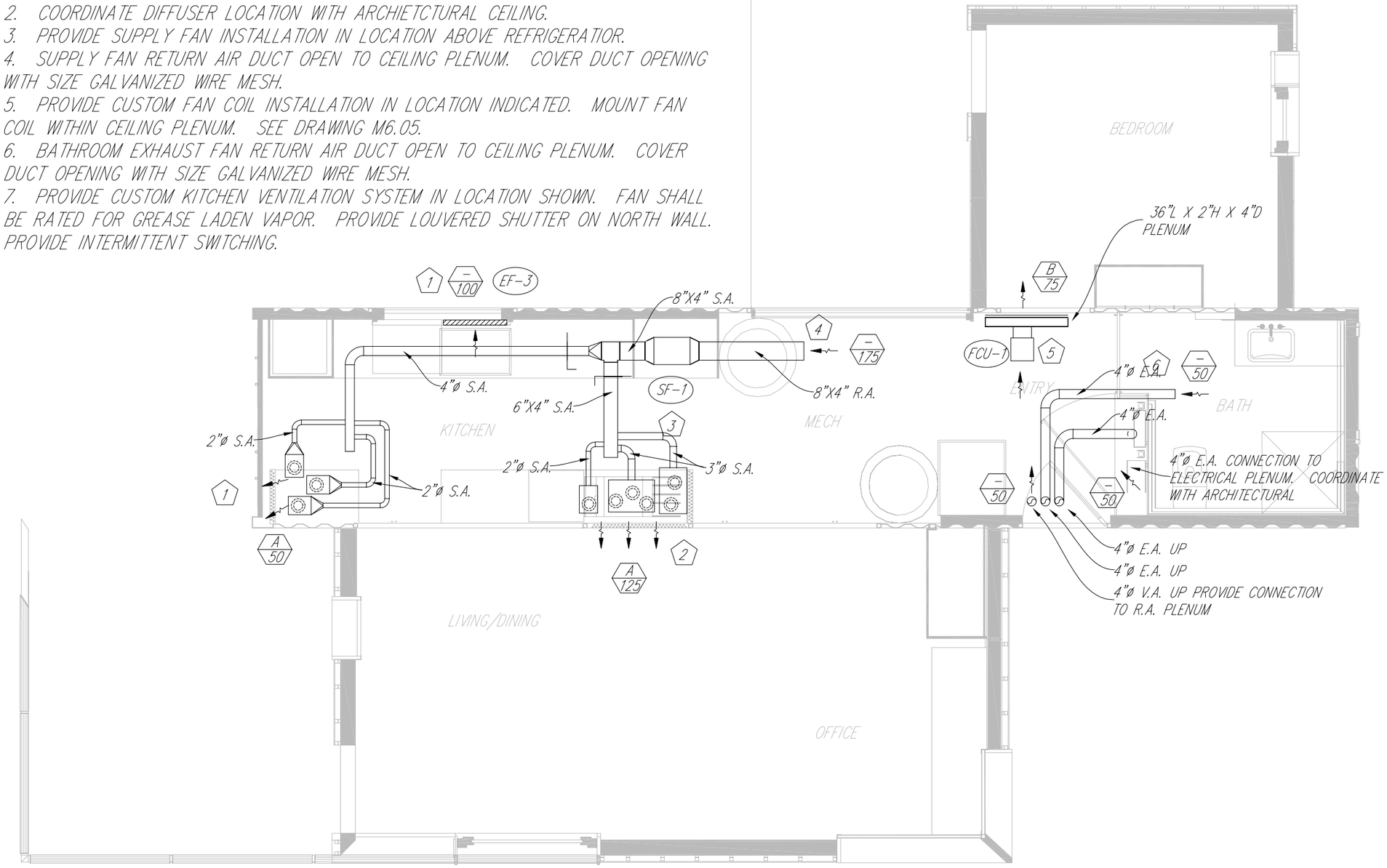

1 GROUND LEVEL HVAC DUCTWORK PLAN
1/4" = 1'-0"

Drawn by	Date
J.S. McNeill	August 7, 2007
Revised	Date

Ground Level HVAC Ductwork Plan

2007 Solar Decathlon

University of Colorado at Boulder
Civil, Environmental, and Architectural Engineering
428 UCB, Room ECCE 441
Boulder, CO 80309-0428

0 1' 2' 4' 8'

M1.11

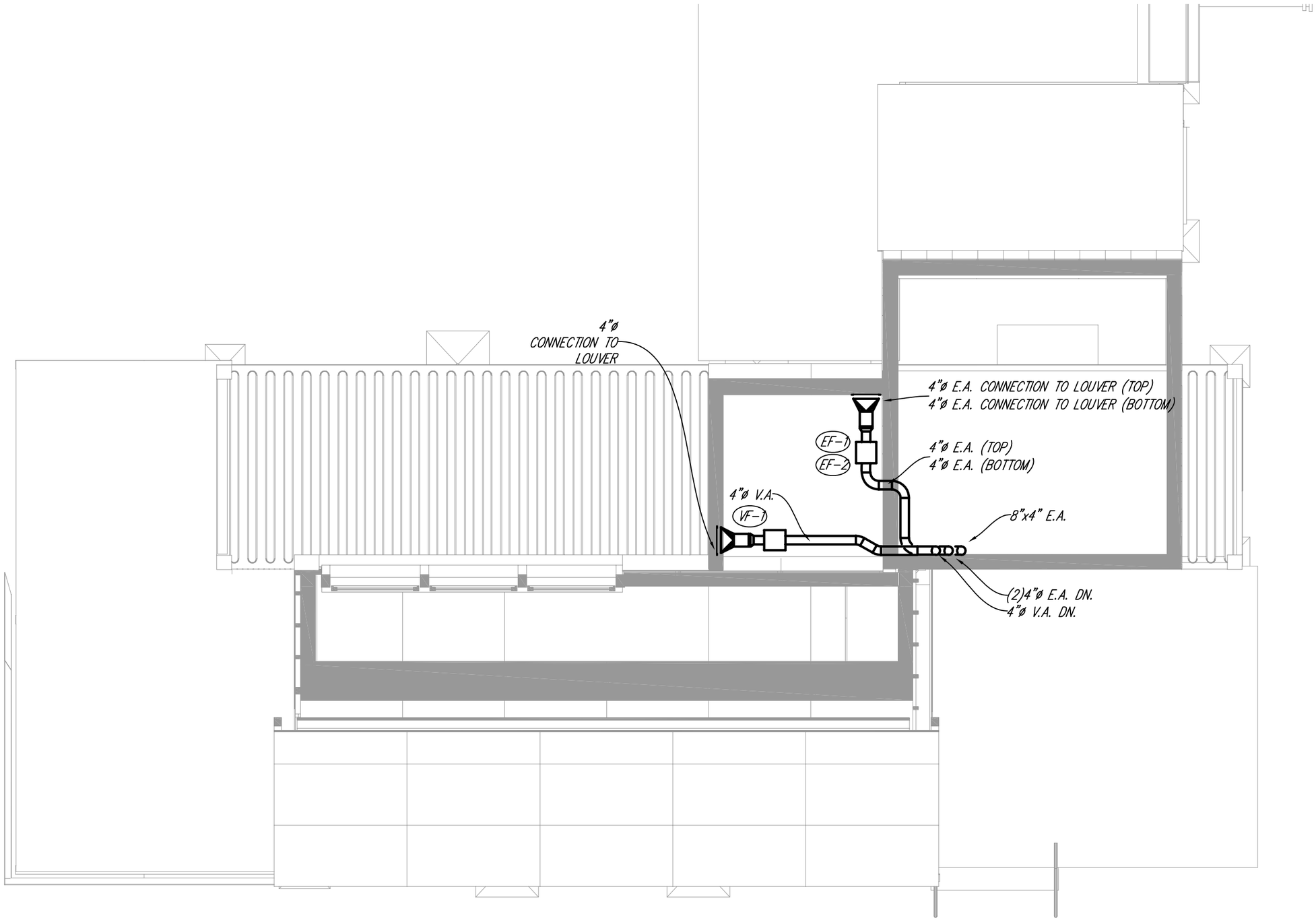

1 ATTIC LEVEL HVAC DUCTWORK PLAN
1/4" = 1'-0"

Drawn by	Date
J.S. McNeill	August 7, 2007
Revised	Date

2007 Solar Decathlon

University of Colorado at Boulder
Civil, Environmental, and Architectural Engineering
428 UCB, Room ECCE 441
Boulder, CO 80309-0428

Attic Level HVAC Ductwork Plan

0 1' 2' 4' 8'

M1.12

SPECIFIC NOTES:

1. SEE HEAT PUMP DRAWING, M3.01, FOR DETAIL OF PIPING CONNECTIONS TO HEAT PUMP CABINET.
2. CAP HYDRONIC SUPPLY AND RETURN PIPING AT BALL VALVES FOR FUTURE USE.

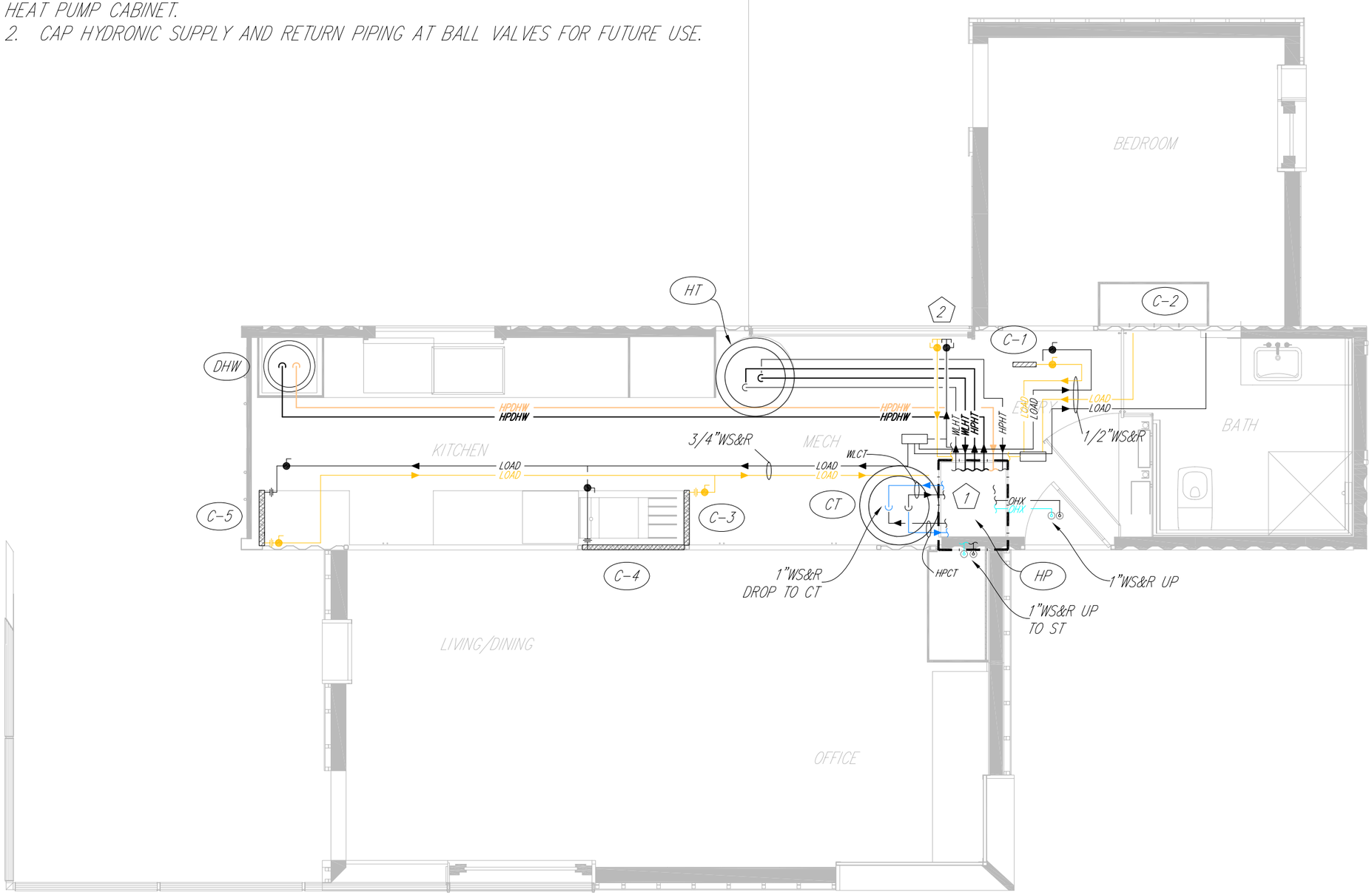

1 GROUND LEVEL HVAC PIPING PLAN
1/4" = 1'-0"

Drawn by	Date
J.S. McNeill	August 7, 2007
Revised	Date

2007 Solar Decathlon

University of Colorado at Boulder
Civil, Environmental, and Architectural Engineering
428 UCB, Room ECCE 441
Boulder, CO 80309-0428

Ground Level HVAC Piping Plan

0 1' 2' 4' 8'

M1.21

SPECIFIC NOTES:

1. PIPING CONNECTION TO PVT SYSTEM. SEE PVT DRAWINGS, M1.31 TO M1.34.
2. (3) OUTDOOR FAN COIL UNITS STACKED VERTICALLY.

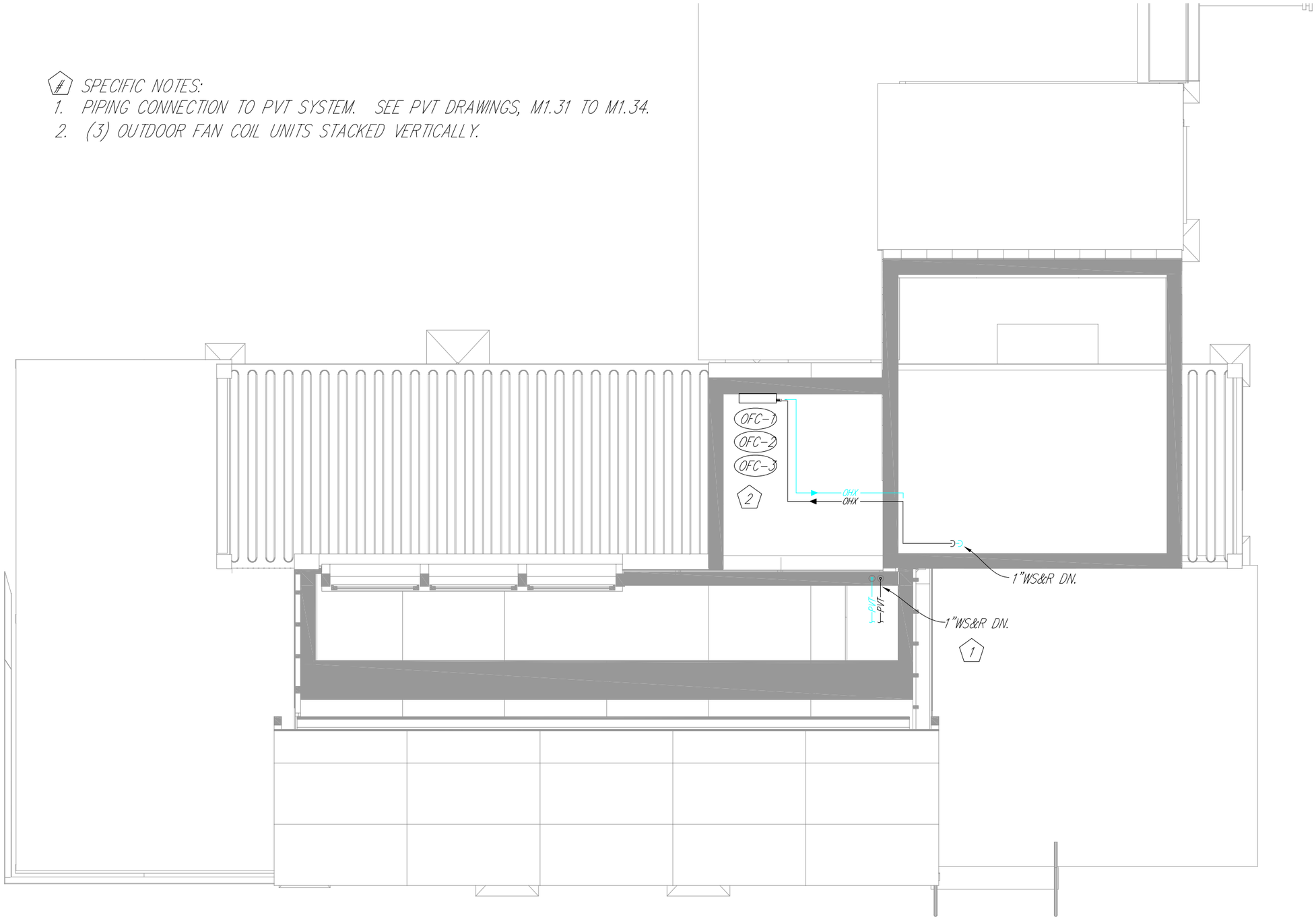

1 ATTIC LEVEL HVAC PIPING PLAN
1/4" = 1'-0"

Drawn by	Date
J.S. McNeill	August 7, 2007
Revised	Date

2007 Solar Decathlon

University of Colorado at Boulder
Civil, Environmental, and Architectural Engineering
428 UCB, Room ECCE 441
Boulder, CO 80309-0428

Attic Level HVAC Piping Plan

0 1' 2' 4' 8'

M1.22

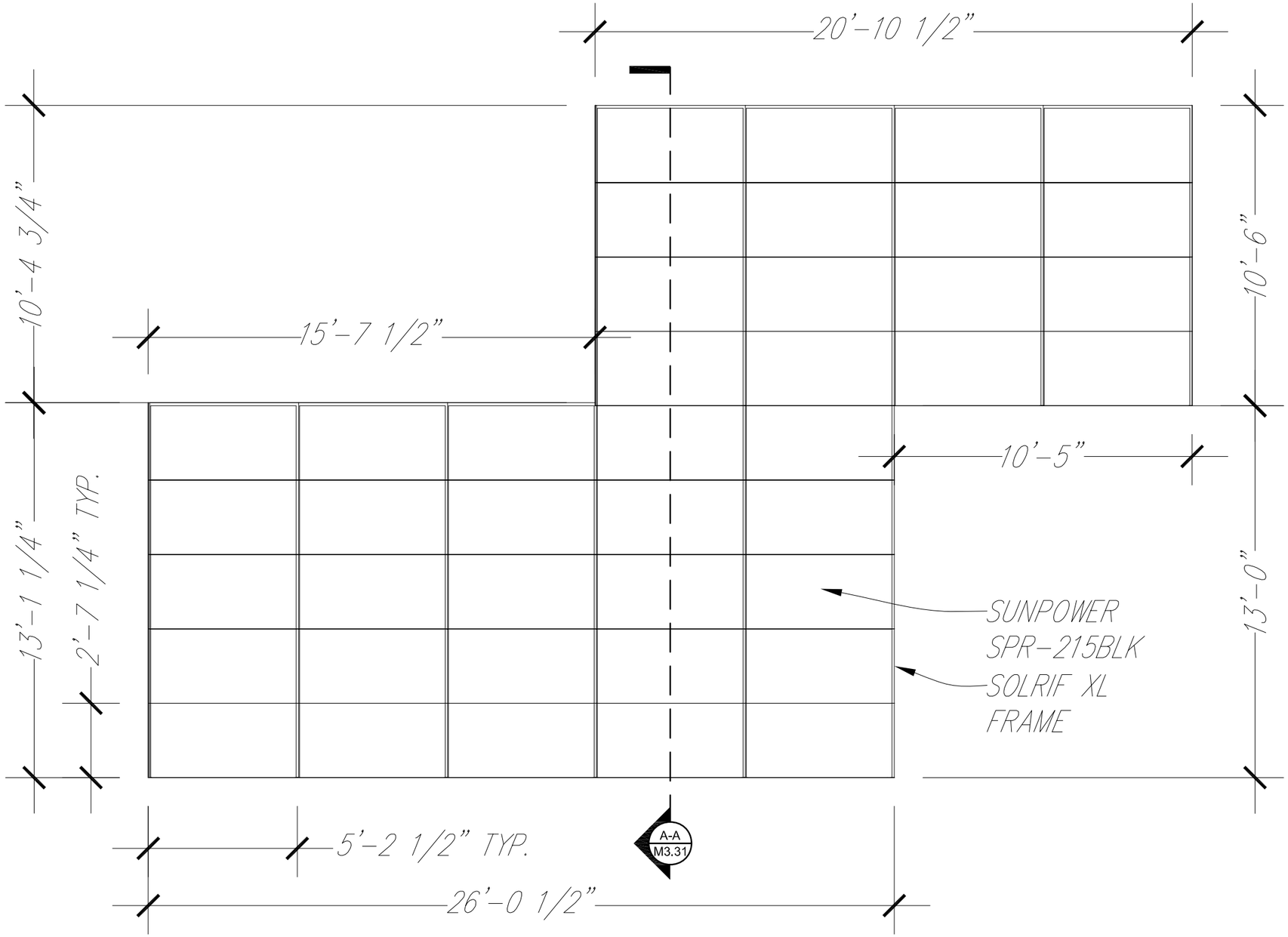

1 PV ROOF PLAN
1/4" - 1'-0"

Drawn by	Date
C.Corbin	August 7, 2007
Revised	Date

2007 Solar Decathlon

University of Colorado at Boulder
Civil, Environmental, and Architectural Engineering
428 UCB, Room ECCE 441
Boulder, CO 80309-0428

PV Roof Plan

0 1' 2' 4' 8'

M1.31

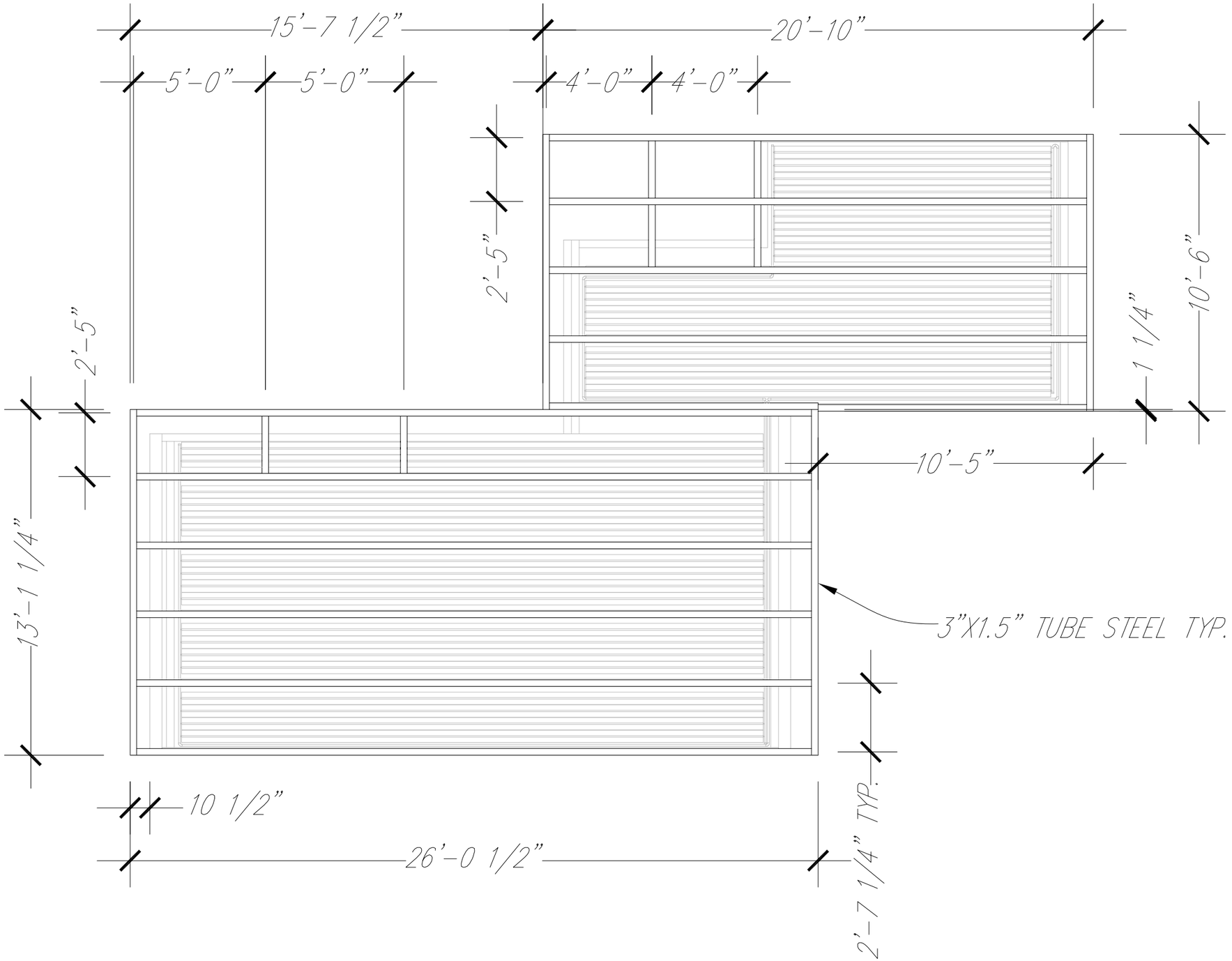

1 PV FRAME SUPPORT PLAN
1/4" - 1'-0"

Drawn by	Date
C.Corbin	August 7, 2007
Revised	Date

2007 Solar Decathlon

University of Colorado at Boulder
Civil, Environmental, and Architectural Engineering
428 UCB, Room ECCE 441
Boulder, CO 80309-0428

PV Frame Support Plan

0 1' 2' 4' 8'

M1.32

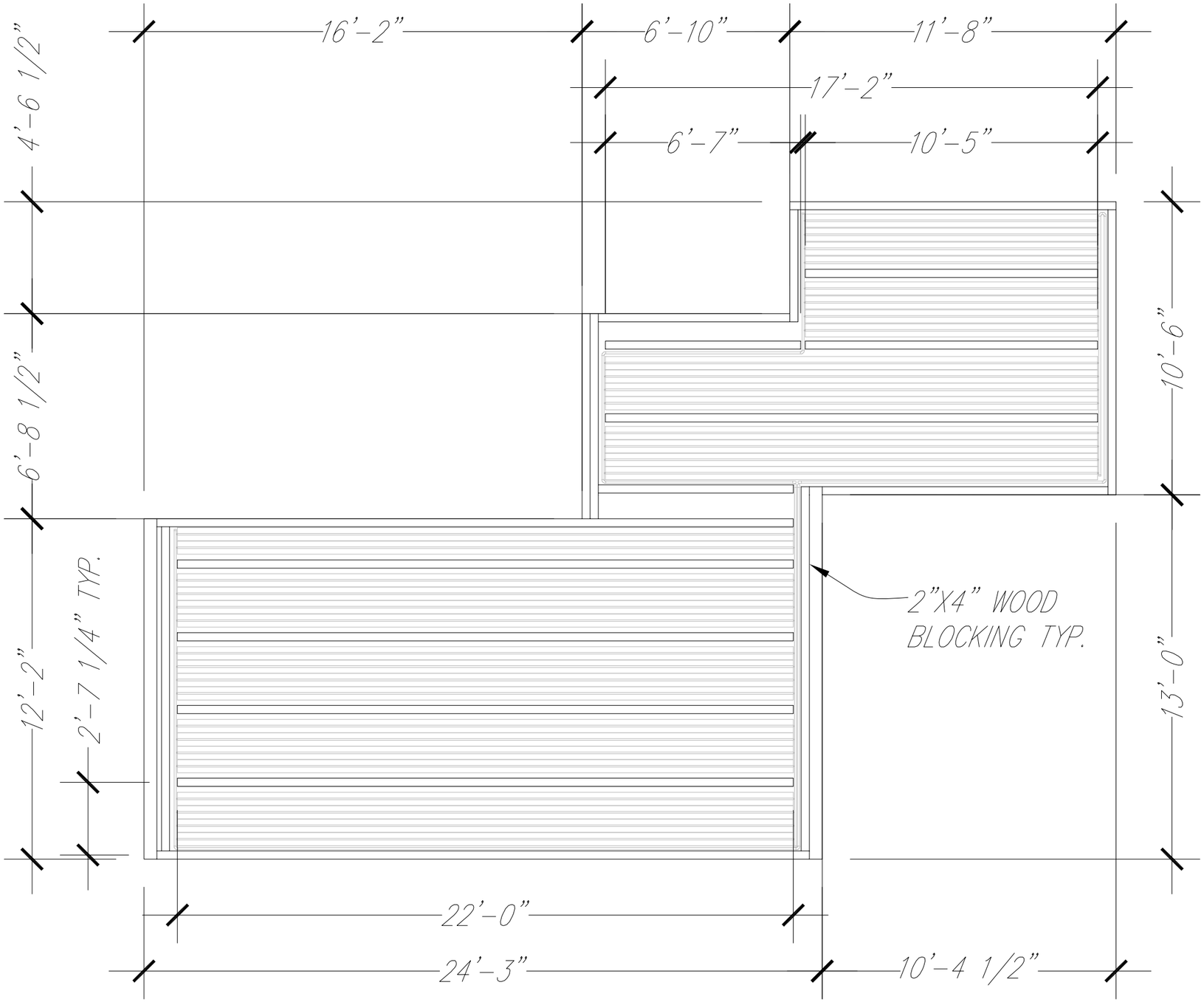

1 PV FRAME BLOCKING PLAN
1/4" - 1'-0"

Drawn by	Date
C.Corbin	August 7, 2007
Revised	Date

2007 Solar Decathlon

University of Colorado at Boulder
Civil, Environmental, and Architectural Engineering
428 UCB, Room ECCE 441
Boulder, CO 80309-0428

PV Frame Blocking Plan

0 1' 2' 4' 8'

M1.33

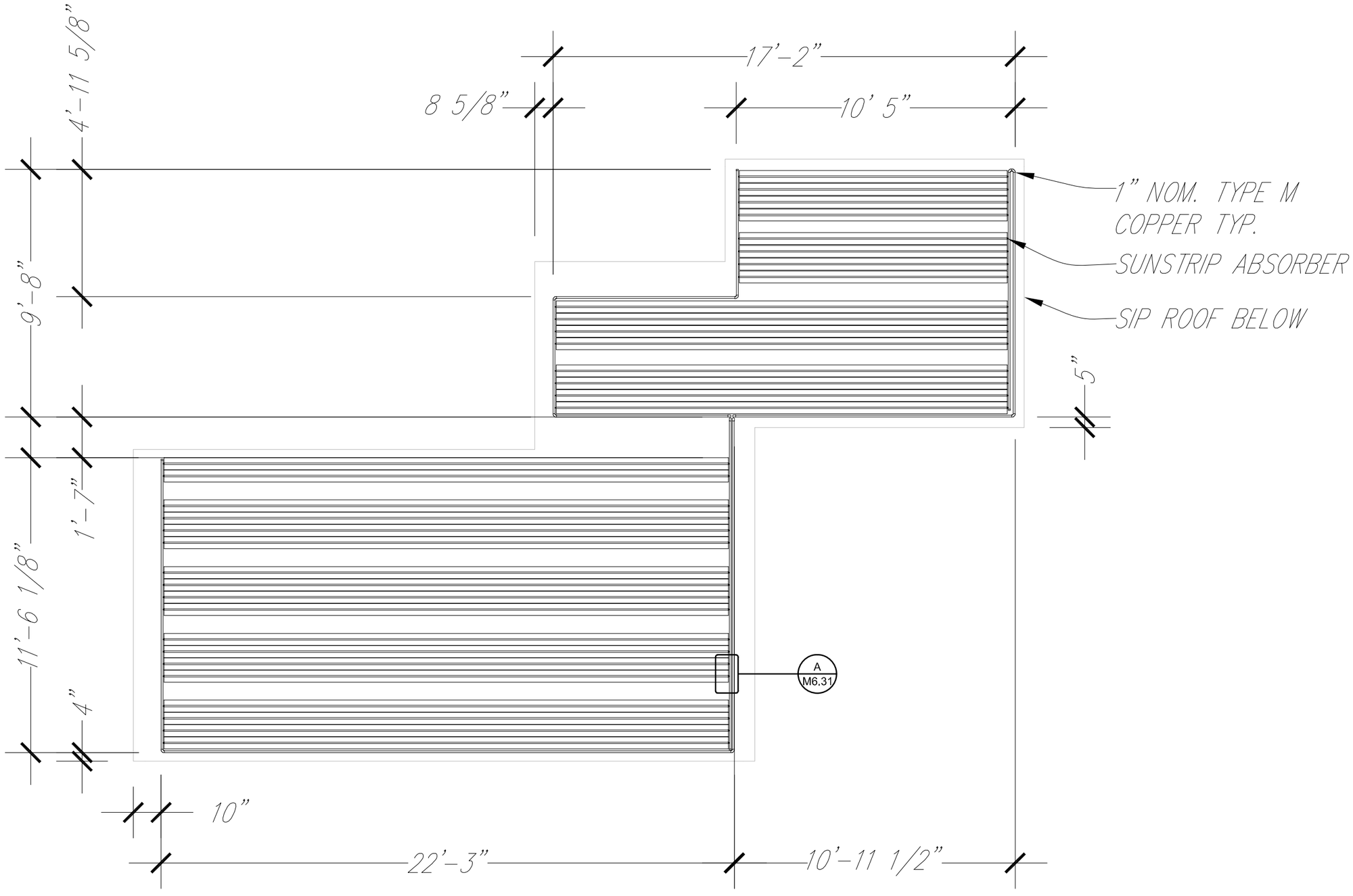

1 PVT ABSORBER PLAN
1/4" - 1'-0"

Drawn by	Date
C.Corbin	August 7, 2007
Revised	Date

2007 Solar Decathlon

University of Colorado at Boulder
Civil, Environmental, and Architectural Engineering
428 UCB, Room ECCE 441
Boulder, CO 80309-0428

PVT Absorber Plan

0 1' 2' 4' 8'

M1.34

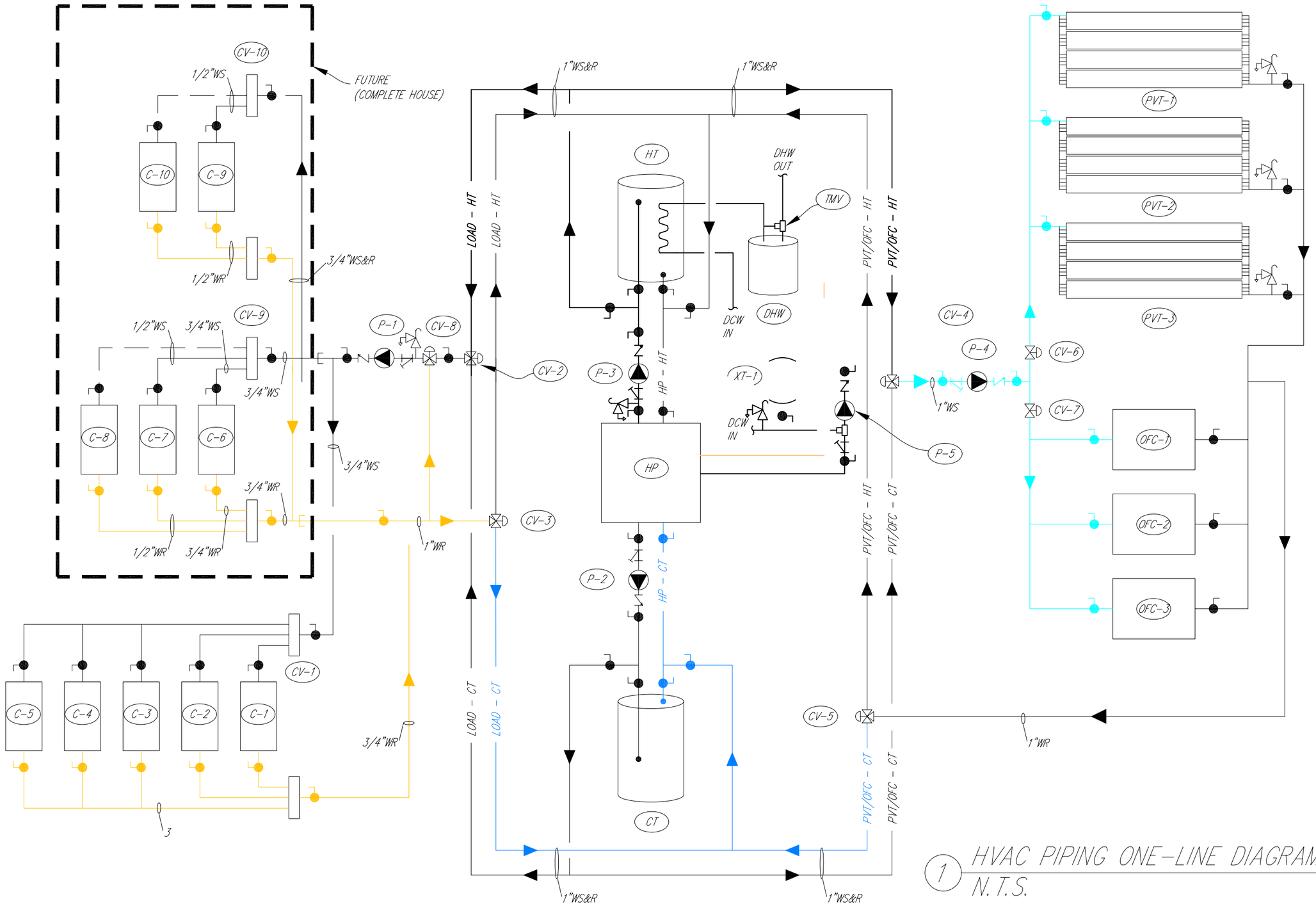

1 HVAC PIPING ONE-LINE DIAGRAM
N.T.S.

Drawn by	Date
B. Gonzalez	August 7, 2007
Revised	Date

2007 Solar Decathlon

University of Colorado at Boulder
Civil, Environmental, and Architectural Engineering
428 UCB, Room ECCE 441
Boulder, CO 80309-0428

HVAC Piping One-line Diagram

M2.01

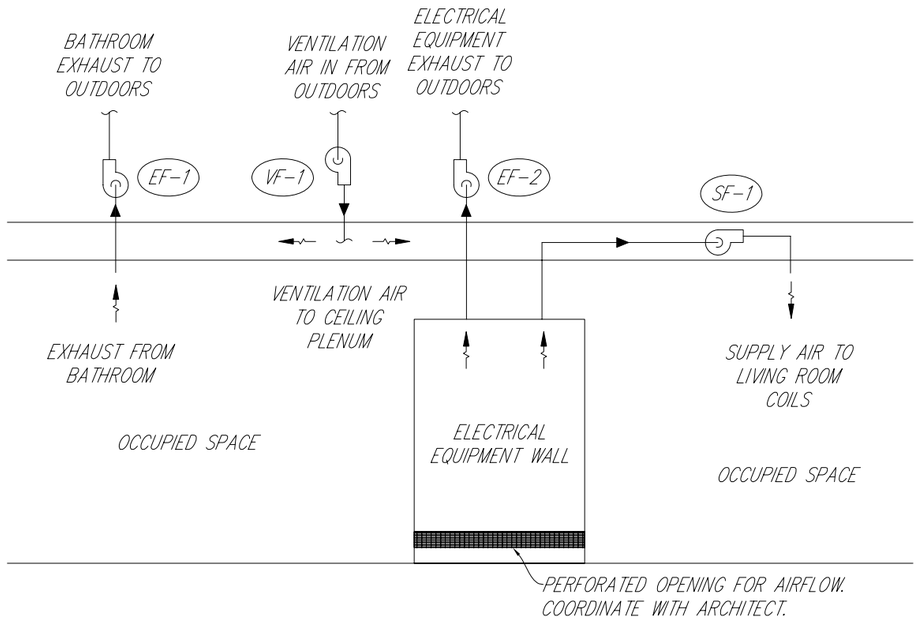

1 HVAC DUCTWORK ONE-LINE DIAGRAM
N.T.S.

NOTES:
1. BATHROOM EXHAUST FAN, EF-1, SHALL OPERATE INTERMITTENTLY BY MEANS OF SWITCH WITH TIMER DURING THE COOLING PERIOD. DURING THE HEATING PERIOD EF-1 SHALL OPERATE CONTINUOUSLY IN ORDER TO MAINTAIN BALANCED VENTILATION FLOW.
2. ELECTRICAL EQUIPMENT EXHAUST, EF-2, SHALL OPERATE CONTINOUSLY DURING THE COOLING PERIOD IN REMOVE EXCESS HEAT GENERATED BY ELECTRICAL EQUIPMENT FROM THE BUILDING AND PROVIDE BALANCED VENTILATION. DURING TEH HEATING PERIOD EF-2 SHALL NOT OPERATE.
3. SF-1 SHALL OPERATE UPON CALL FOR ZONE HEATING OR COOLING.
4. VENTILATION FAN, VF-1 SHALL OPERATE CONTINUOUSLY TO PROVIDE ADEQUATE VENTILATION AIR.

Drawn by	Date
J.S. McNeill	August 7, 2007
Revised	Date

2007 Solar Decathlon

University of Colorado at Boulder
Civil, Environmental, and Architectural Engineering
428 UCB, Room ECCE 441
Boulder, CO 80309-0428

HVAC Ductwork One-line Diagram

M2.02

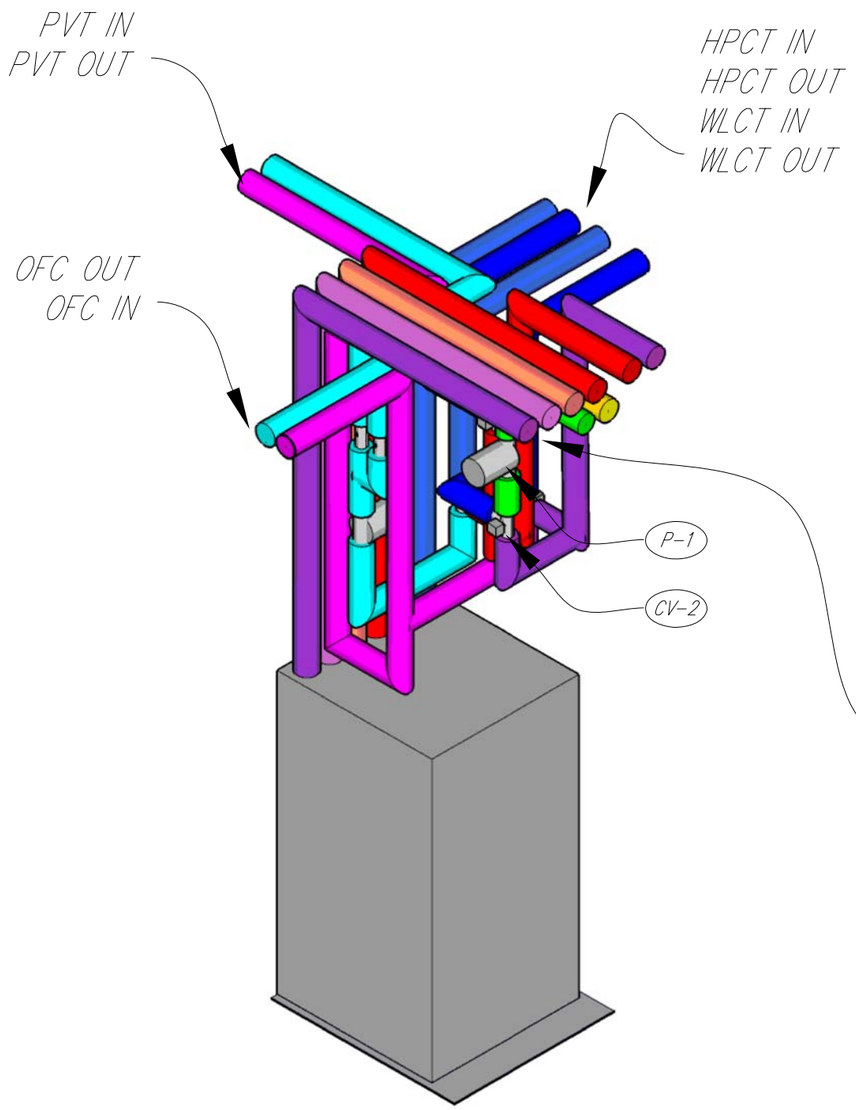

1 HEAT PUMP CABINET NW ISOMETRIC
1/2" = 1'-0"

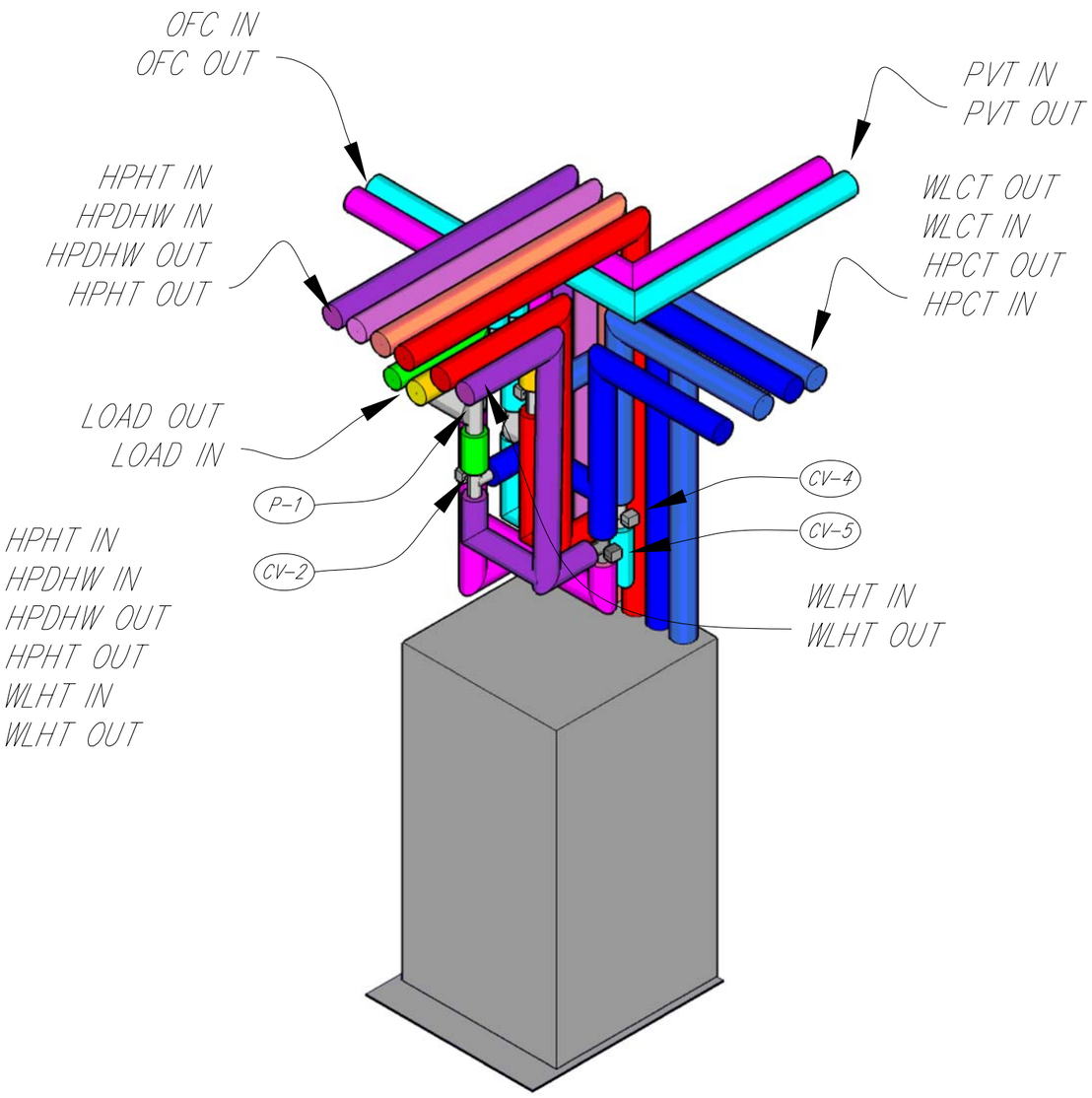

2 HEAT PUMP CABINET NE ISOMETRIC
1/2" = 1'-0"

Drawn by	Date
J.S. McNeill	August 7, 2007
Revised	Date

2007 Solar Decathlon

University of Colorado at Boulder
Civil, Environmental, and Architectural Engineering
428 UCB, Room ECCE 441
Boulder, CO 80309-0428

Heat Pump Cabinet Piping

0 6" 1" 2' 4'

M3.01

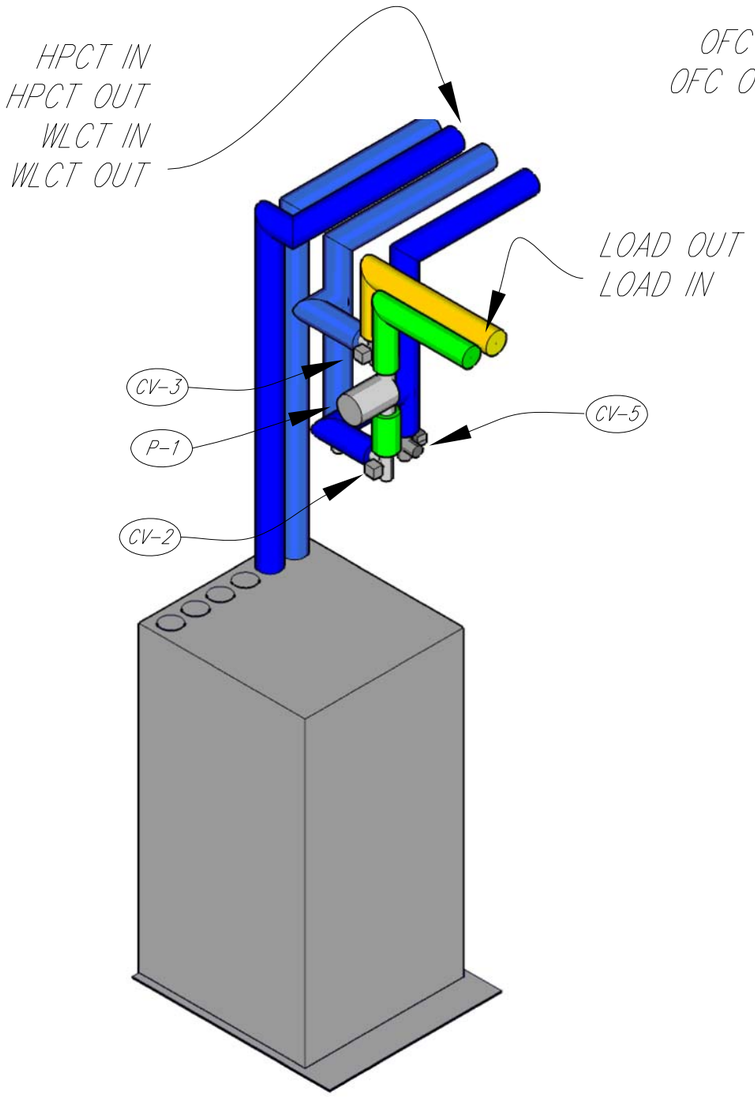

HEAT PUMP CABINET
COLD TANK – LOADS
NE ISOMETRIC

1

1/2" = 1'-0"

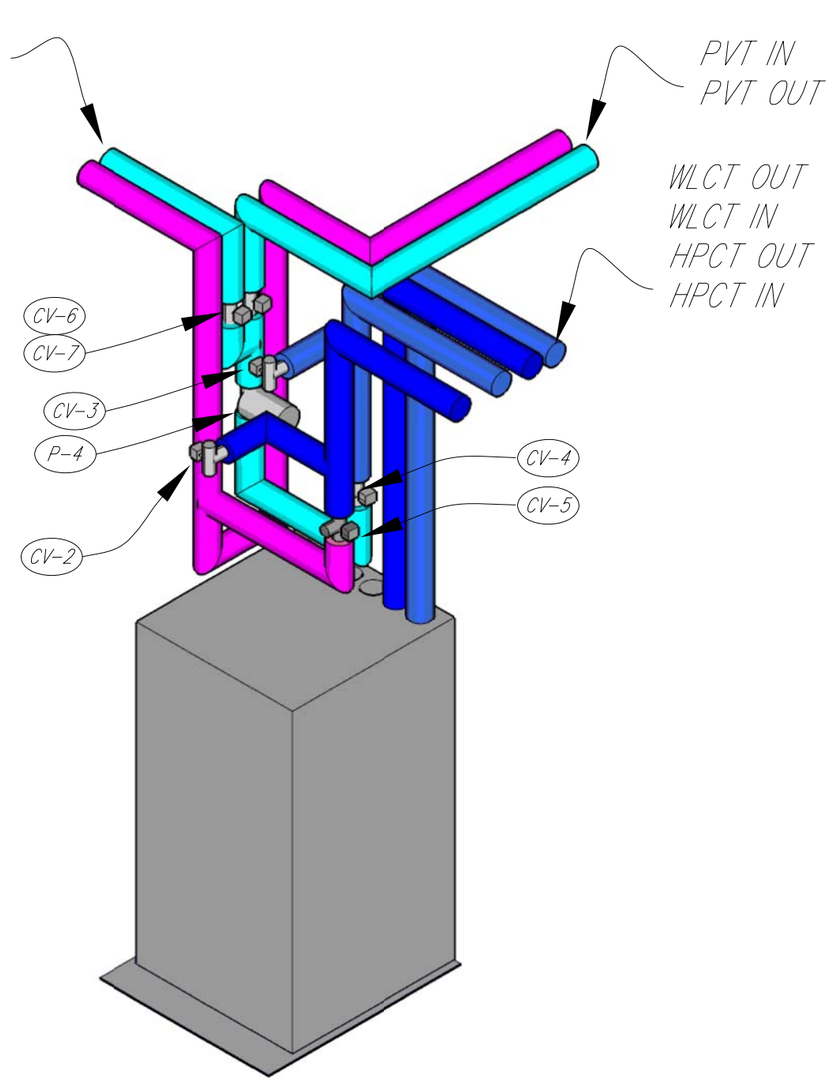

HEAT PUMP CABINET
COLD TANK – PVT/OFC
NW ISOMETRIC

2

1/2" = 1'-0"

Drawn by	Date
J.S. McNeill	August 7, 2007
Revised	Date

2007 Solar Decathlon

Heat Pump Cabinet Piping

University of Colorado at Boulder
Civil, Environmental, and Architectural Engineering
428 UCB, Room ECCE 441
Boulder, CO 80309-0428

0 6" 1" 2' 4'

M3.02

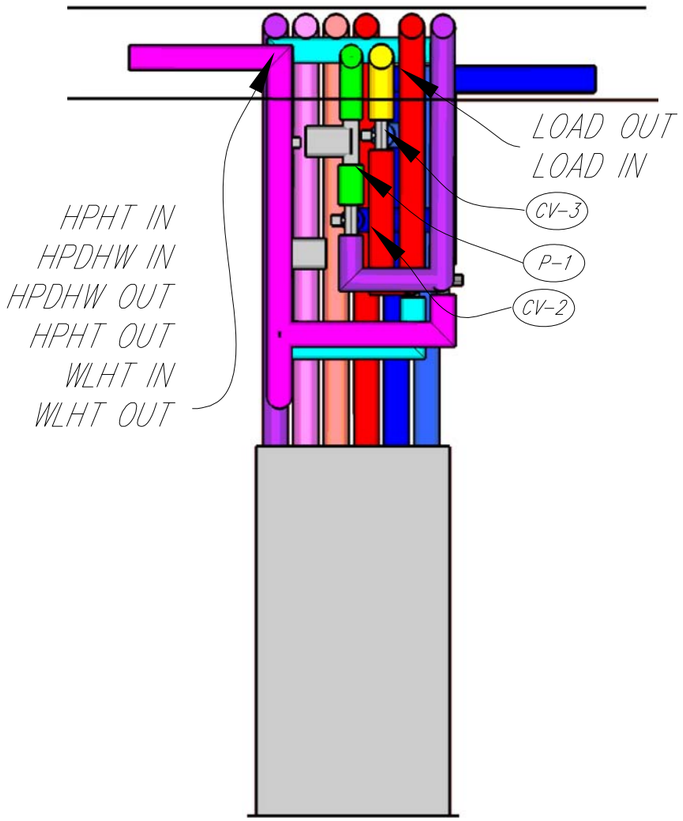

1 HEAT PUMP CABINET NORTH ELEVATION
1/2" = 1'-0"

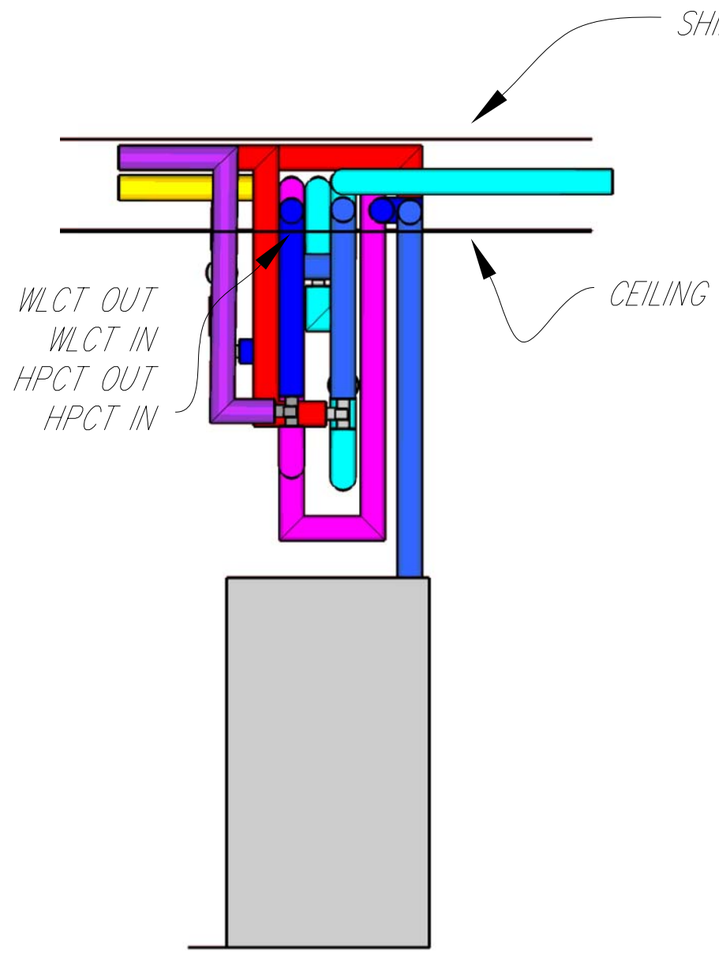

2 HEAT PUMP CABINET WEST ELEVATION
1/2" = 1'-0"

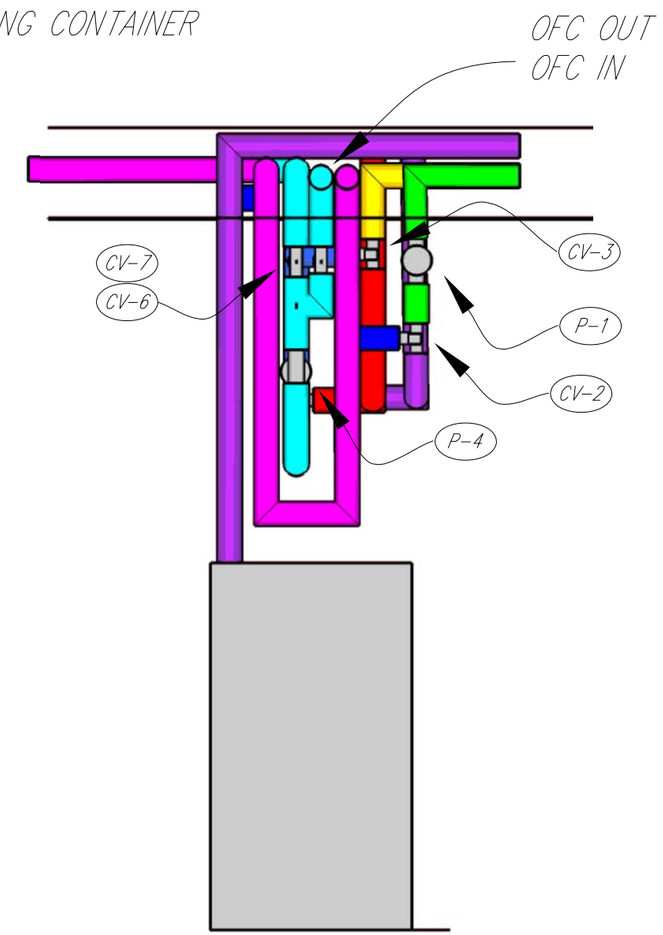

3 HEAT PUMP CABINET WEST ELEVATION
1/2" = 1'-0"

Drawn by	Date
J.S. McNeill	August 7, 2007
Revised	Date

2007 Solar Decathlon

University of Colorado at Boulder
Civil, Environmental, and Architectural Engineering
428 UCB, Room ECCE 441
Boulder, CO 80309-0428

Heat Pump Cabinet Piping

0 6" 1' 2' 4'

M3.03

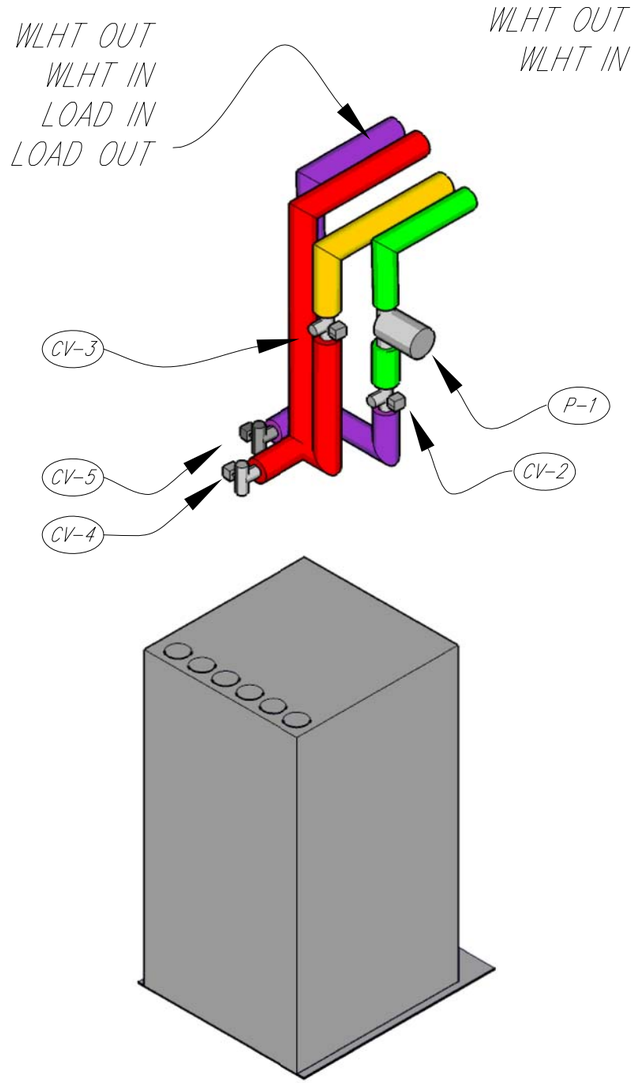

HEAT PUMP CABINET
HOT TANK – LOADS
SE ISOMETRIC

1 1/2" = 1'-0"

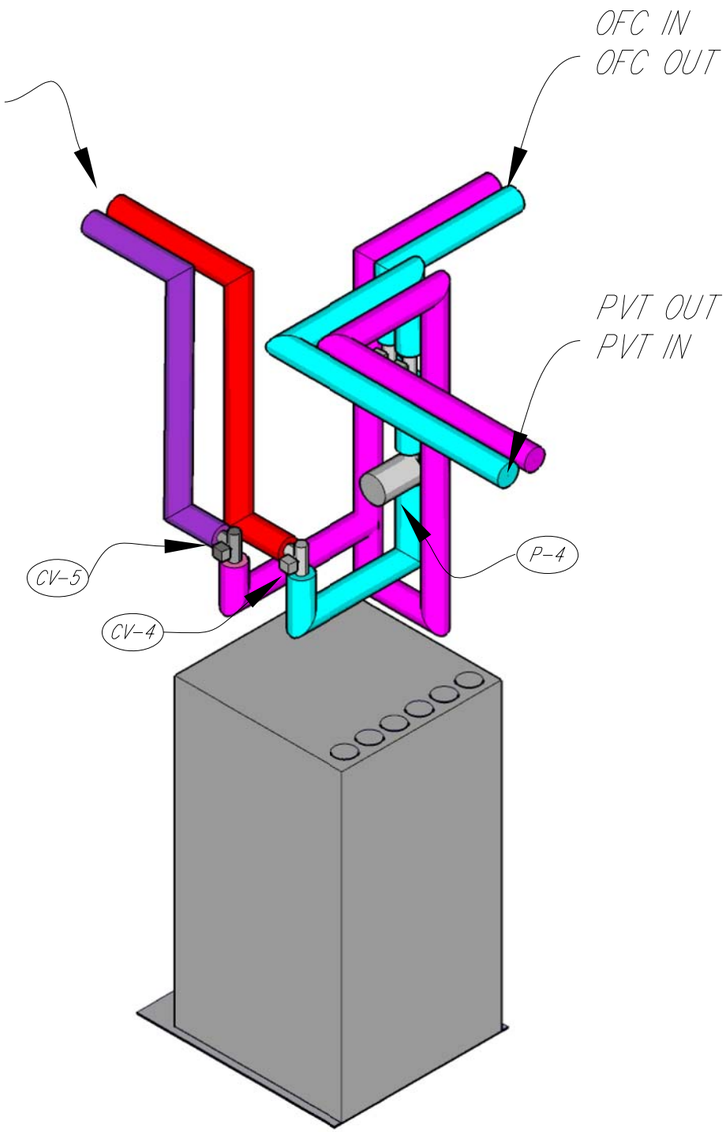

HEAT PUMP CABINET
HOT TANK – PVT/OFC
SW ISOMETRIC

2 1/2" = 1'-0"

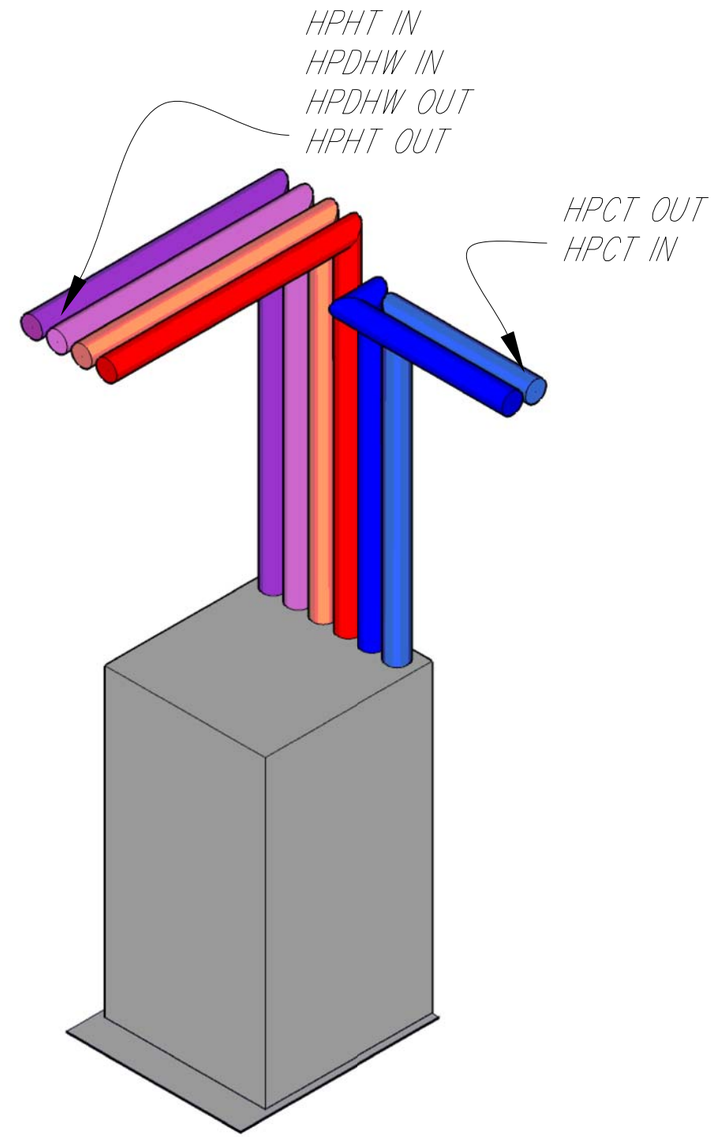

HEAT PUMP CABINET
HEAT PUMP CONNECTIONS
NW ISOMETRIC

3 1/2" = 1'-0"

Drawn by J.S. McNeill
Date August 7, 2007
Revised
Date

2007 Solar Decathlon

University of Colorado at Boulder
Civil, Environmental, and Architectural Engineering
428 UCB, Room ECCE 441
Boulder, CO 80309-0428

Heat Pump Cabinet Piping

0 6" 1' 2' 4'

M3.04

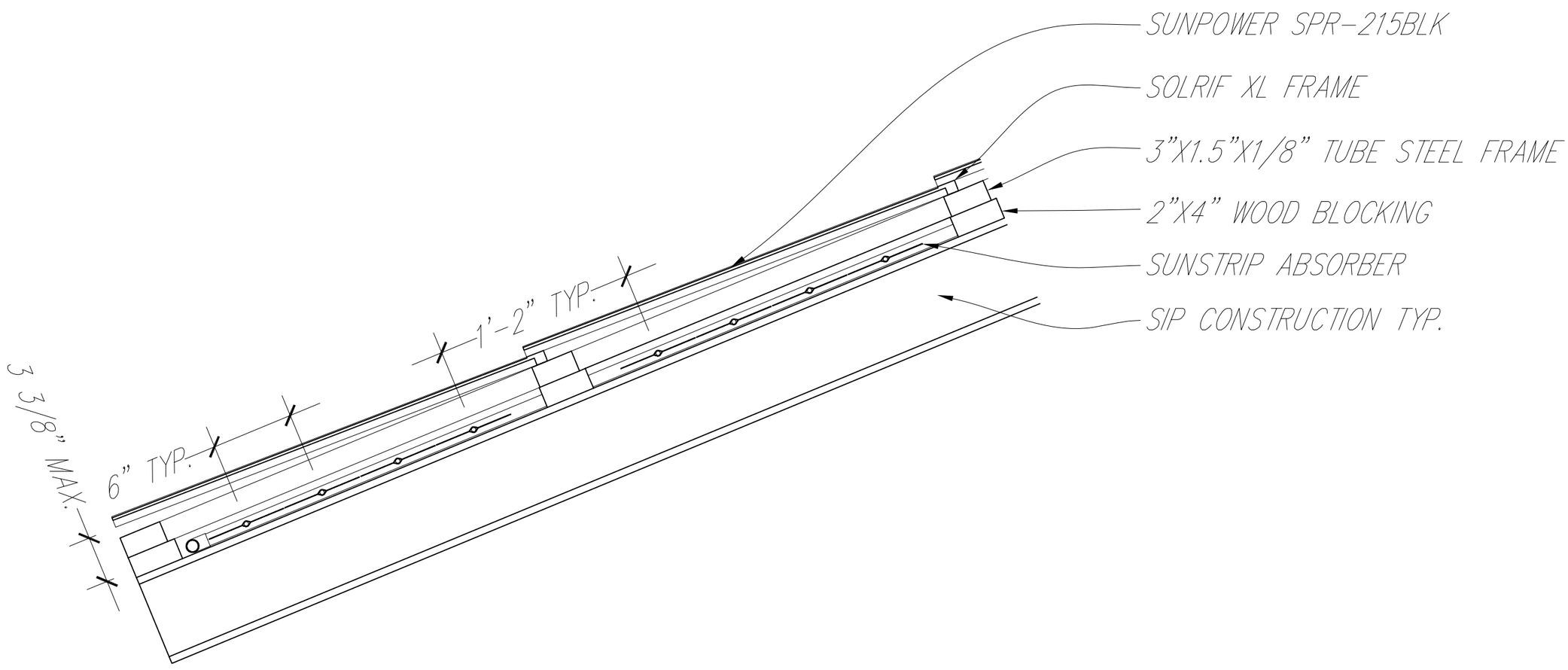

A PVT ASSEMBLY SECTION
1 1/2" – 1'-0"

Drawn by	Date
C.Corbin	August 7, 2007
Revised	Date

2007 Solar Decathlon

University of Colorado at Boulder
Civil, Environmental, and Architectural Engineering
428 UCB, Room ECCE 441
Boulder, CO 80309-0428

PVT Assembly Section

0 3" 6" 1' 2'

M3.31

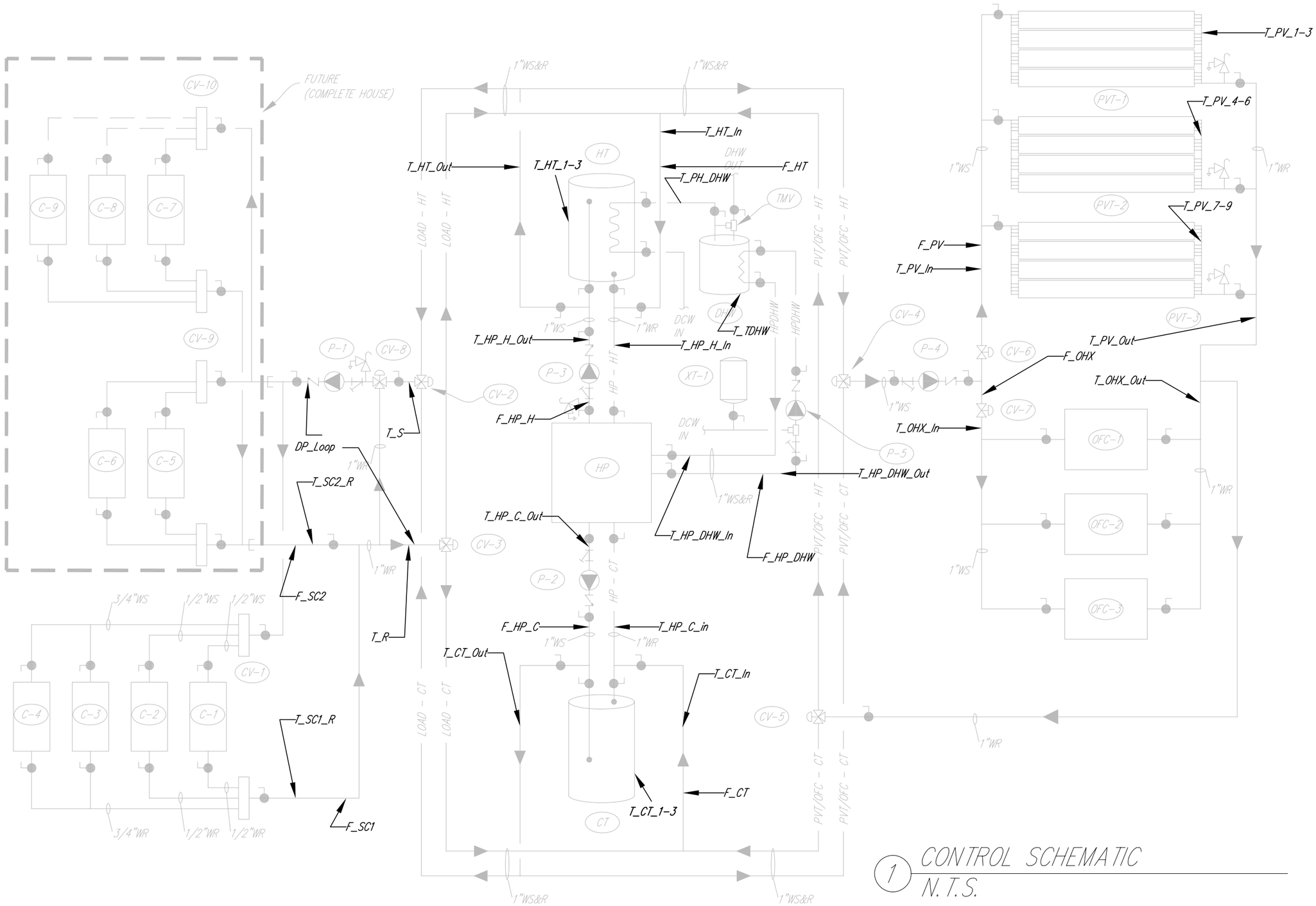

1 CONTROL SCHEMATIC
N.T.S.

Drawn by	Date
A. Boehm	August 7, 2007
Revised	Date

2007 Solar Decathlon

University of Colorado at Boulder
Civil, Environmental, and Architectural Engineering
428 UCB, Room ECCE 441
Boulder, CO 80309-0428

Controls Schematic

M4.01

INPUT

	ID	Sensor	Type	Signal	Number	Description
Zones						
	T_ZK	Thermistor	AI	0-5 VDC	1	Kitchen temp
	T_ZLR	Thermistor	AI	0-5 VDC	1	Living room temp
	T_ZBed	Thermistor	AI	0-5 VDC	1	Comp bedroom temp
	T_ZBath	Thermistor	AI	0-5 VDC	1	Comp bathroom temp
	T_ZMast	Thermistor	AI	0-5 VDC	1	Master bedroom temp
	T_ZGuest1	Thermistor	AI	0-5 VDC	1	Guest1 bedroom temp
	T_ZGuest2	Thermistor	AI	0-5 VDC	1	Guest2 bedroom temp
	T_ZMBath	Thermistor	AI	0-5 VDC	1	Master bathroom temp
	T_ZHall	Thermistor	AI	0-5 VDC	1	Hall temp
	T_ZGBath	Thermistor	AI	0-5 VDC	1	Guest bathroom temp
	T_SunSp	Thermistor	AI	0-5 VDC	1	Sunspace temp
	H_Kitchen	Humidity Sensor	AI	0-5 VDC	1	Kitchen Humidity Sensor
	H_Bathroom	Humidity Sensor	AI	0-5 VDC	1	Bathroom Humidity Sensor
	CO2_1-3	CO2 Sensors	AI		3	
Storage Tanks						
	T_HT_1_1-3	Thermistor	AI	0-5 VDC	3	Hot tank temps
	T_CT_1_1-3	Thermistor	AI	0-5 VDC	3	Cold tank temps
	T_CT_in	Thermistor	AI	0-5 VDC	1	Cold tank inlet temp
	T_CT_out	Thermistor	AI	0-5 VDC	1	Cold tank outlet temp
	T_HT_in	Thermistor	AI	0-5 VDC	1	Hot tank inlet temp
	T_HT_out	Thermistor	AI	0-5 VDC	1	Hot tank outlet temp
	F_CT	Flowmeter	AI or Count		1	Cold water tank flow
	F_HT	Flowmeter	AI or Count		1	Hot water tank flow
Heat Pump						
	T_HP_C_in	Thermistor	AI	0-5 VDC	1	HP cold-side inlet temp
	T_HP_C_out	Thermistor	AI	0-5 VDC	1	HP cold-side outlet temp
	T_HP_H_in	Thermistor	AI	0-5 VDC	1	HP hot-side inlet temp
	T_HP_H_out	Thermistor	AI	0-5 VDC	1	HP hot-side outlet temp
	T_HP_DHW_in	Thermistor	AI	0-5 VDC	1	HP DHW inlet temp
	T_HP_DHW_out	Thermistor	AI	0-5 VDC	1	HP DHW outlet temp
	F_HP_C	Flowmeter	AI or Count		1	HP cold-side flow
	F_HP_H	Flowmeter	AI or Count		1	HP hot-side flow
	F_HP_DHW	Flowmeter	AI or Count		1	HP DHW flow

	ID	Sensor	Type	Signal	Number	Description
Hydronic Loops						
	T_OHX_in	Thermistor	AI	0-5 VDC	1	Outdoor HX inlet temp
	T_OHX_out	Thermistor	AI	0-5 VDC	1	Outdoor HX outlet temp
	T_PV_in	Thermistor	AI	0-5 VDC	1	Solar thermal inlet temp
	T_PV_out	Thermistor	AI	0-5 VDC	1	Solar thermal outlet temp
	T_S	Thermistor	AI	0-5 VDC	1	Zone loop supply temp
	T_R	Thermistor	AI	0-5 VDC	1	Zone loop return temp
	T_Zone_SC1_R	Thermistor	AI	0-5 VDC	1	Container 1 zone return temp
	T_Zone_SC2_R	Thermistor	AI	0-5 VDC	1	Container 2 zone return temp
	DP_Loop	Pressure Sensor	AI	0-5 VDC	1	Zone loop pressure drop
	F_Zone_SC1	Flowmeter	AI or Count		1	Container 1 zone loop flow
	F_Zone_SC2	Flowmeter	AI or Count		1	Container 2 zone loop flow
	F_OHX	Flowmeter	AI or Count		1	Outdoor HX flow
	F_ST	Flowmeter	AI or Count		1	Solar thermal flow
DHW						
	T_DHW_Mix	Thermistor	AI	0-5 VDC	1	DHW supply temp
	T_Inter_DHW	Thermistor	AI	0-5 VDC	1	DHW preheat temp
	T_Water_main	Thermistor	AI	0-5 VDC	1	Water mains temp
PV						
	T_PV_1-9	Thermistor	AI	0-5 VDC	10	Photovoltaic module temps
Weather						
	Sol_Rad_Horiz	Radiation Sensors	AI	0-5 VDC	1	Solar radiation, horizontal
	Sol_Rad_PV	Radiation Sensors	AI	0-5 VDC	1	Solar radiation, roof plane
	Wind_Dir	Potentiometer	AI	0-5 VDC	1	Wind direction
	Wind_Speed	Anemometer	Count		1	Wind speed
	H_OA	Humidity Sensor	AI	0-5 VDC	1	Outdoor humidity
	T_OA	Thermistor	AI	0-5 VDC	1	Outdoor temperaure
Power						
	DC_Shunt_1-4	DC Shunt	AI		4	Various DC power
	AC_Sub_1-16	AC Submeters	AI or Count		16	Various AC power
					91	**Total**

OUTPUT

ID	Type	Device	Device Voltag	Signal	Number	Description
Valve_Z1	DO	Water valve, 2-way	24 VAC	NA	3	Zone water control valves (On CV 1)
Valve_Z4	DO	Water valve, 2-way	25 VAC	NA	5	Zone water control valves (On CV 9-10)
SF_1-2	DO	Fan	24 VAC	NA	2	Supply air to zones
SF_3-4	DO	Fan	24 VAC	NA	2	Supply air to zones
EF_1	DO	Fan	24 VAC	NA	1	Bathroom exhaust fan
EF_2	DO	Fan	24 VAC	NA	1	Electrical equipment exhaust fan
EF_3	DO	Fan	24 VAC	NA	1	Bathroom exhaust fan
VF_1	DO	Fan	24 VAC	NA	1	Ventilation air from outdoors
VF_2	DO	Fan	24 VAC	NA	1	Ventilation air from outdoors
Ctrl_HP	DO	Heat Pump Controler	208 VAC	NA	1	Heat pump on/off
Ctrl_P1	DO	Variable Spd. Pump	NA	NA	1	Zone loop pump on/off
Ctrl_P1	AO	Variable Spd. Pump	NA	2-10 VDC	1	Zone loop pump speed signal
*- Controlled by heat pump						

ID	Type	Device	Device Voltage	Signal	Number	Description
Ctrl_P2*	DO	Const. Spd Pump	115 VAC	NA	1	HP cold-side pump on/off
Ctrl_P3*	DO	Const. Spd Pump	115 VAC	NA	1	HP hot-side pump on/off
Ctrl_P4	DO	Variable Spd. Pump	115 VAC	NA	1	Roof heat exchanger pump on/off
Ctrl_P4	AO	Variable Spd. Pump	NA	2-10 VDC	1	Roof heat exchanger pump speed signal
Ctrl_P5*	DO	Const. Spd Pump	115 VAC	NA	1	HP DHW pump on/off
CV_4	AO	Three Way Control Valve	NA	2-10 VDC	1	Control valve from hot tank or cold tank to air and PV
CV_5	AO	Three Way Control Valve	NA	2-10 VDC	1	Control valve from hot tank or cold tank to air and PV
CV_6	DO	Two Way Control Valve	NA	2-10 VDC	1	Control valve to PV
CV_7	DO	Two Way Control Valve	NA	2-10 VDC	1	Control valve to outside air
CV_8	AO	Three Way Control Valve	NA	2-10 VDC	1	Mixing valve for zone supply flow
OFC_1-3	DO	Fan	115 VAC	NA	3	Outside air HX fan on/off
						Totals
					28	**DO**
					5	**AO**

1 CONTROL DEVICES
N.T.S.

Drawn by A. Boehm
Date August 7, 2007
Revised
Date

2007 Solar Decathlon

University of Colorado at Boulder
Civil, Environmental, and Architectural Engineering
428 UCB, Room ECCE 441
Boulder, CO 80309-0428

Control Devices

M4.02

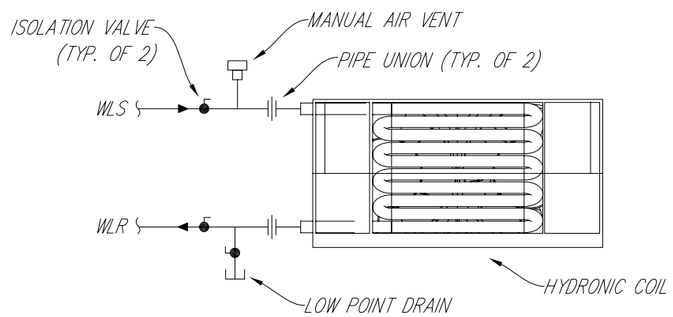

NOTE: INDIVIDUAL ZONE COILS ARE TO BE BALANCED AT MULTI-ZONE CONTROL VALVES.

1 TYPICAL HYDRONIC COIL PIPING DETAIL
N.T.S.

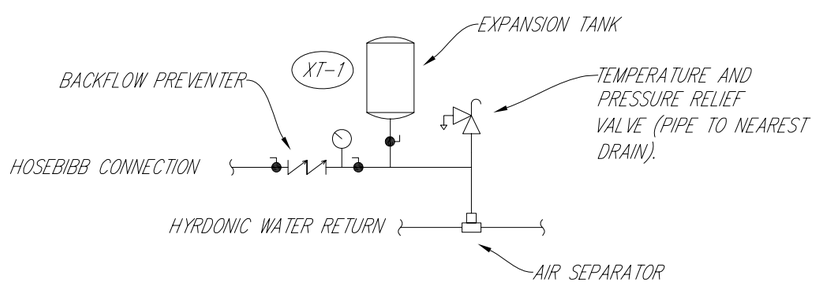

2 HPDHW LOOP FILL POINT DIAGRAM
N.T.S.

Drawn by	Date
J.S. McNeill	August 7, 2007
Revised	Date

2007 Solar Decathlon

University of Colorado at Boulder
Civil, Environmental, and Architectural Engineering
428 UCB, Room ECCE 441
Boulder, CO 80309-0428

General Mechanical Details

M6.01

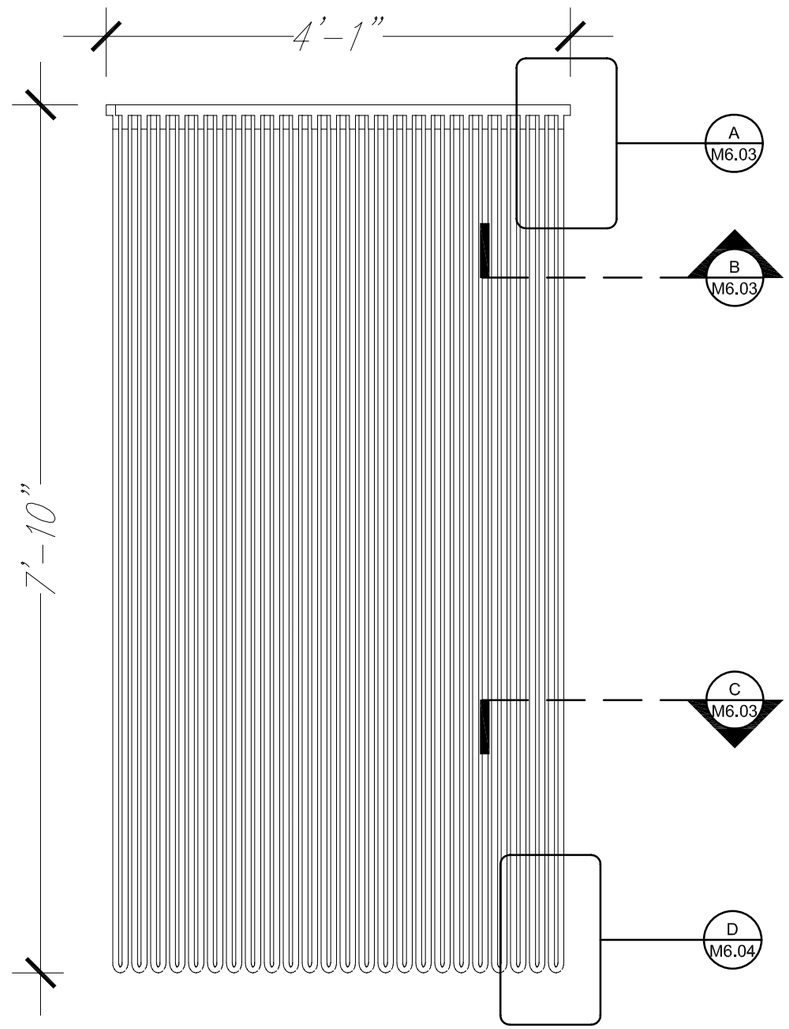

1 RADIANT ELEMENT FRONT
3/4" – 1'-0"

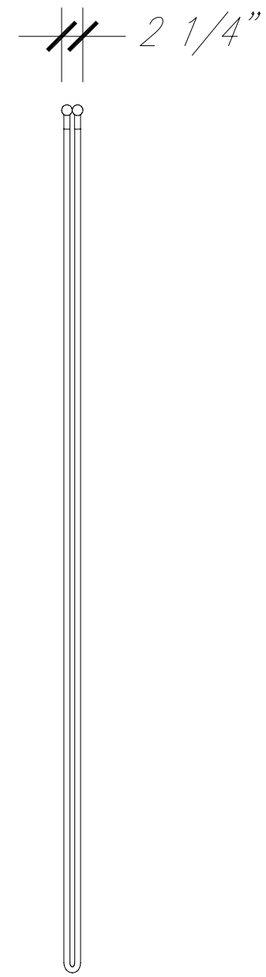

1 RADIANT ELEMENT SIDE
3/4" – 1'-0"

Drawn by	Date
C.Corbin	August 7, 2007
Revised	Date

2007 Solar Decathlon

University of Colorado at Boulder
Civil, Environmental, and Architectural Engineering
428 UCB, Room ECCE 441
Boulder, CO 80309-0428

Radiant Element Details

0 6" 1' 2' 4'

M6.02

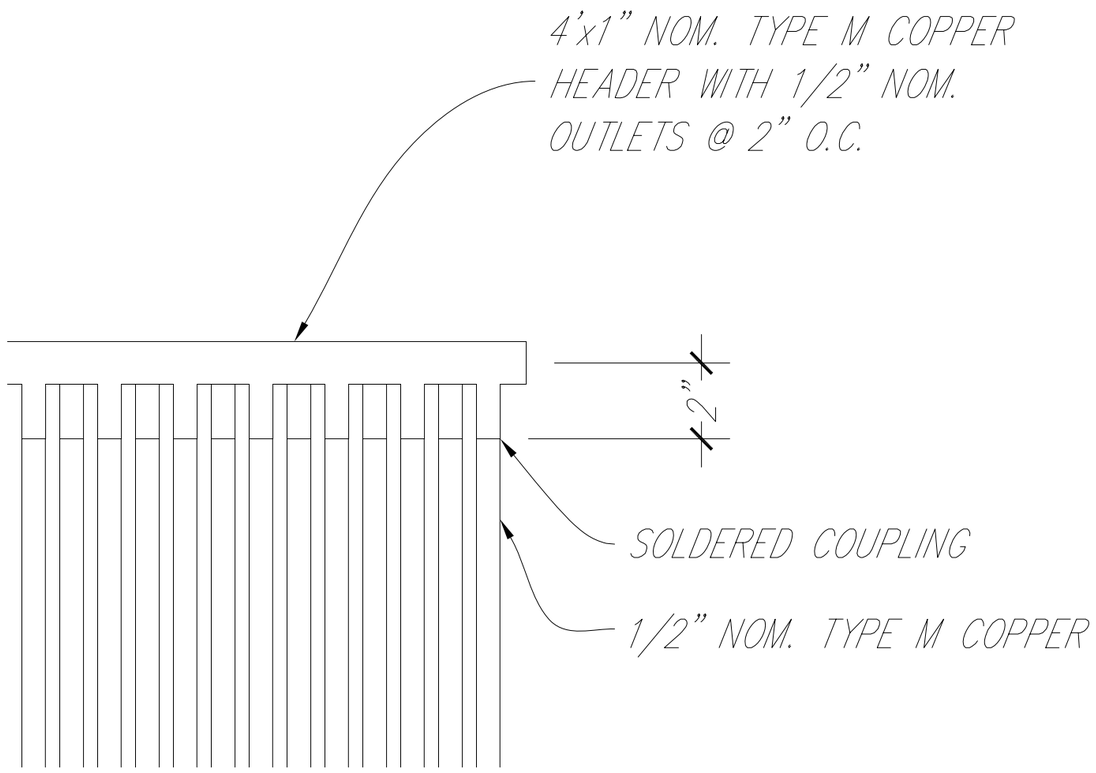

A RADIANT ELEMENT DETAILS
3" – 1'–0"

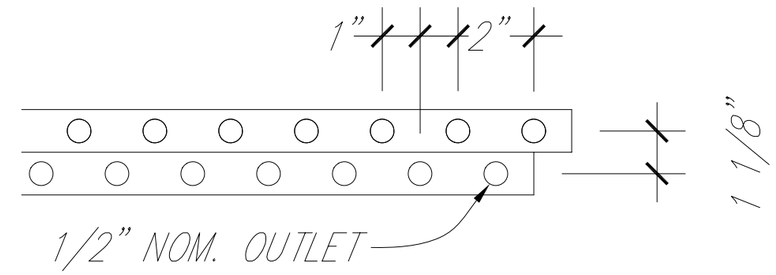

B RADIANT ELEMENT SECTION
3" – 1'–0"

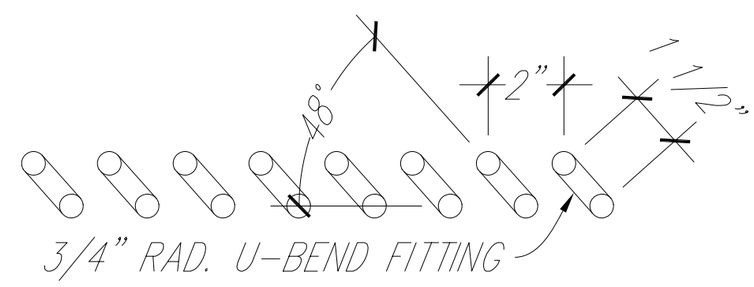

C RADIANT ELEMENT SECTION
3" – 1'–0"

Drawn by C.Corbin
Date August 7, 2007
Revised
Date

2007 Solar Decathlon

University of Colorado at Boulder
Civil, Environmental, and Architectural Engineering
428 UCB, Room ECCE 441
Boulder, CO 80309-0428

Radiant Element Details

0 1.5" 3" 6" 1'

M6.03

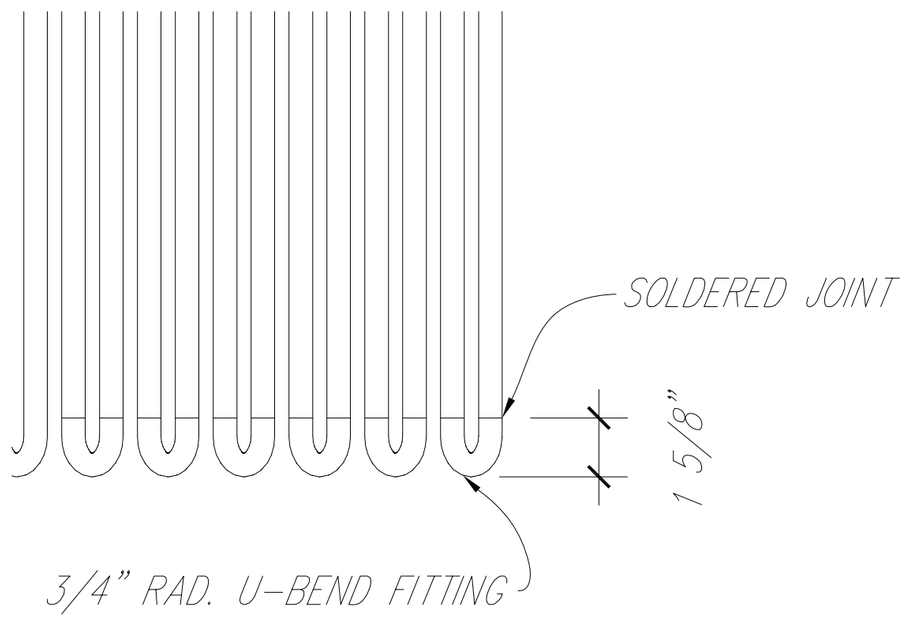

D RADIANT ELEMENT DETAIL
3" – 1'-0"

Drawn by	Date
C.Corbin	August 7, 2007
Revised	Date

2007 Solar Decathlon

Radiant Element Details

0 1.5" 3" 6" 1'

University of Colorado at Boulder
Civil, Environmental, and Architectural Engineering
428 UCB, Room ECCE 441
Boulder, CO 80309-0428

M6.04

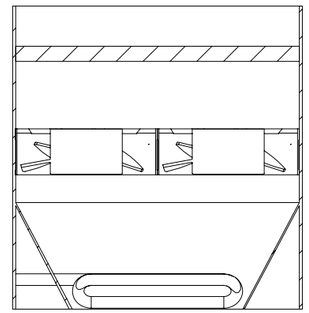

SECTION B–B

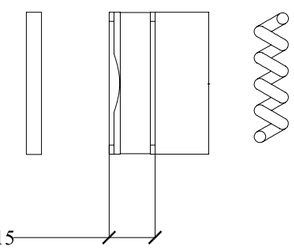

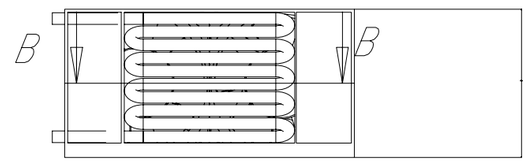

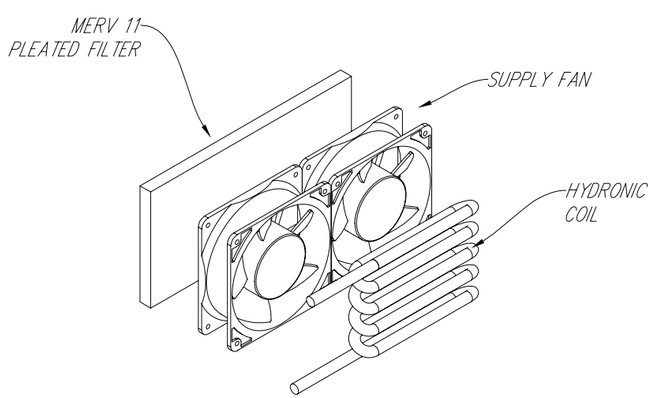

1 FAN COIL PARTS DETAIL
N.T.S.

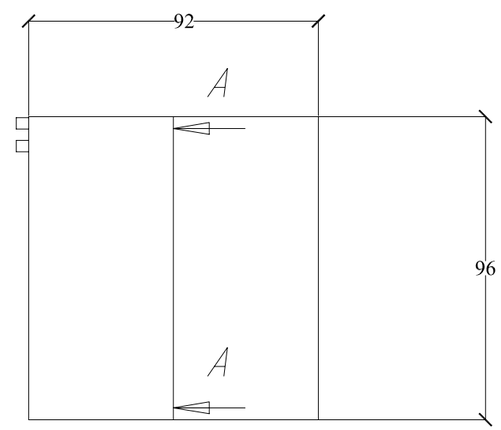

2 FAN COIL PLANS AND SECTIONS
N.T.S.

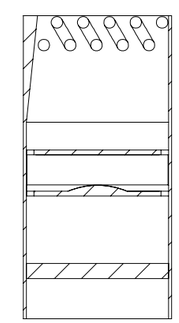

SECTION A–A

Drawn by	Date
C. Ryan	August 7, 2007
Revised	Date

2007 Solar Decathlon

University of Colorado at Boulder
Civil, Environmental, and Architectural Engineering
428 UCB, Room ECCE 441
Boulder, CO 80309-0428

Fan Coil Details

M6.05

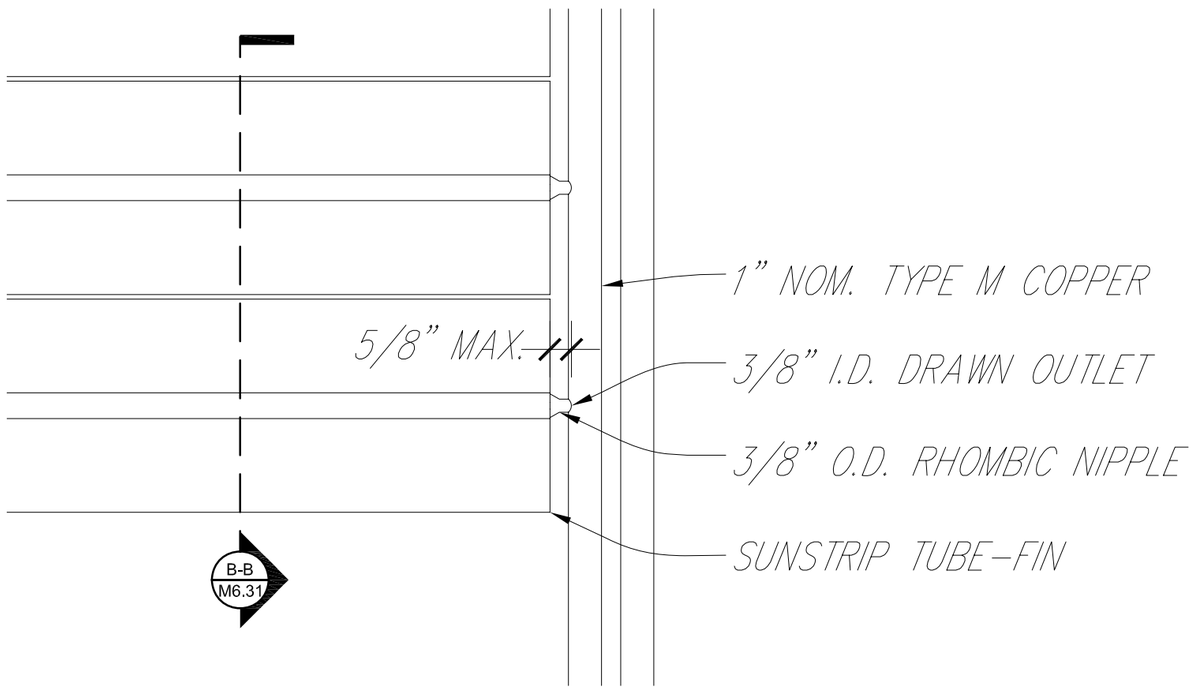

A PVT ABSORBER DETAIL
3" – 1'-0"

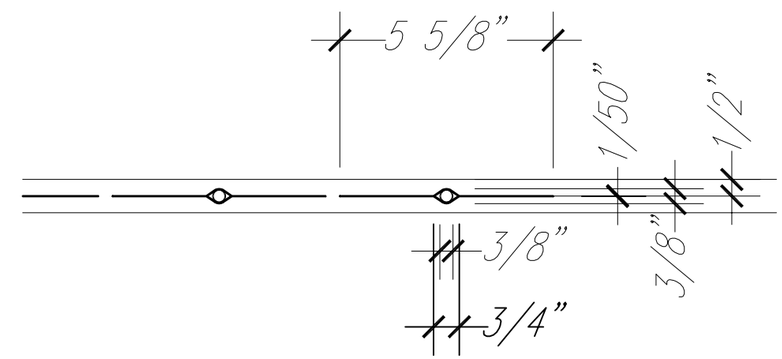

B PVT ABSORBER SECTION
3" – 1'-0"

Drawn by	Date
C.Corbin	August 7, 2007
Revised	Date

2007 Solar Decathlon

University of Colorado at Boulder
Civil, Environmental, and Architectural Engineering
428 UCB, Room ECCE 441
Boulder, CO 80309-0428

PVT Absorber Details

0 1.5' 3" 6" 1'

M6.31

NOTES:

1) ONE OF TWO TANKS TO HAVE TWO MIDDLE INLETS ELIMINATED.
2) BOTTOM OF TANK RECESSED VERTICALLY 3" TO ALLOW FOR INSULATION.
3) DRAIN OUTLET TO INCLUDE 1" NPT THREADED FITTING.
4) TANK AND LID TO BE CONSTRUCTED OF 10GA 304 STAINLESS.
5) MOUNTING HOLES AROUND BOTTOM RIM 1/2" DIAMTER.

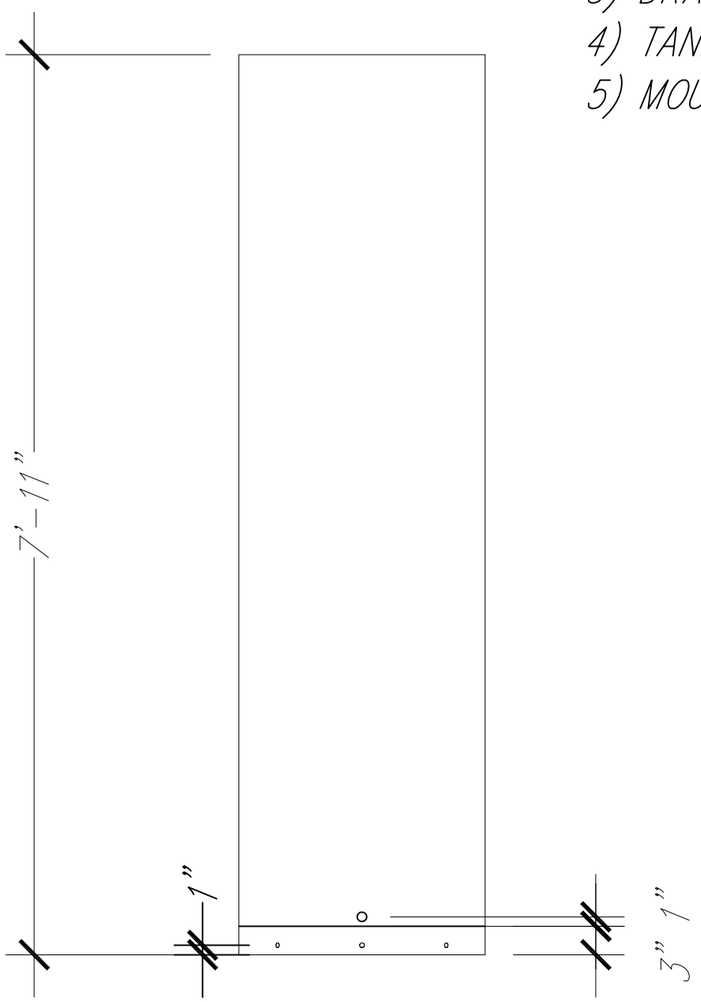

1 TANK FRONT VIEW
3/4" - 1'-0"

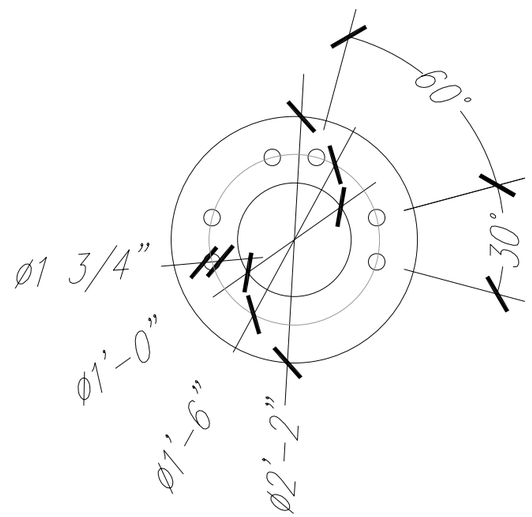

2 TANK TOP VIEW
3/4" - 1'-0"

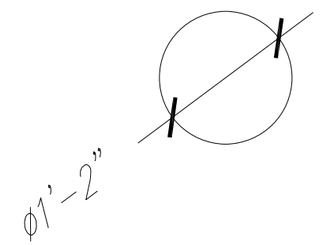

3 TANK LID TOP VIEW
3/4" - 1'-0"

Drawn by	Date
C.Corbin	August 7, 2007
Revised	Date

2007 Solar Decathlon

Thermal Storage Tank

University of Colorado at Boulder
Civil, Environmental, and Architectural Engineering
428 UCB, Room ECCE 441
Boulder, CO 80309-0428

0 6" 1' 2' 4'

M6.41

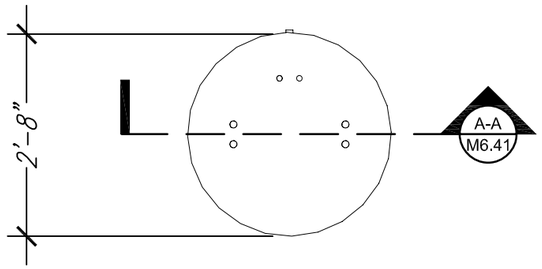

1 TANK ASSEBMLY TOP
1/2" – 1'-0"

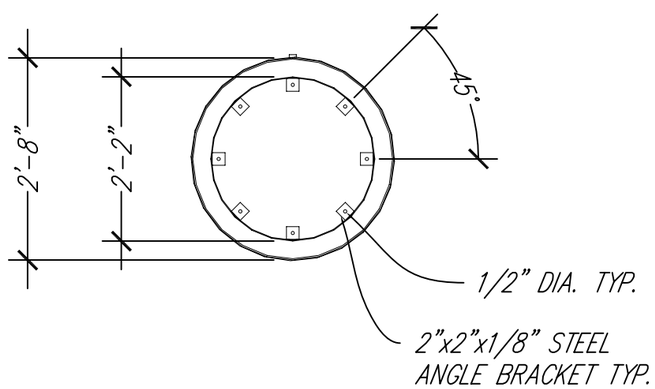

2 TANK ASSEMBLY BOTTOM
1/2" – 1'-0"

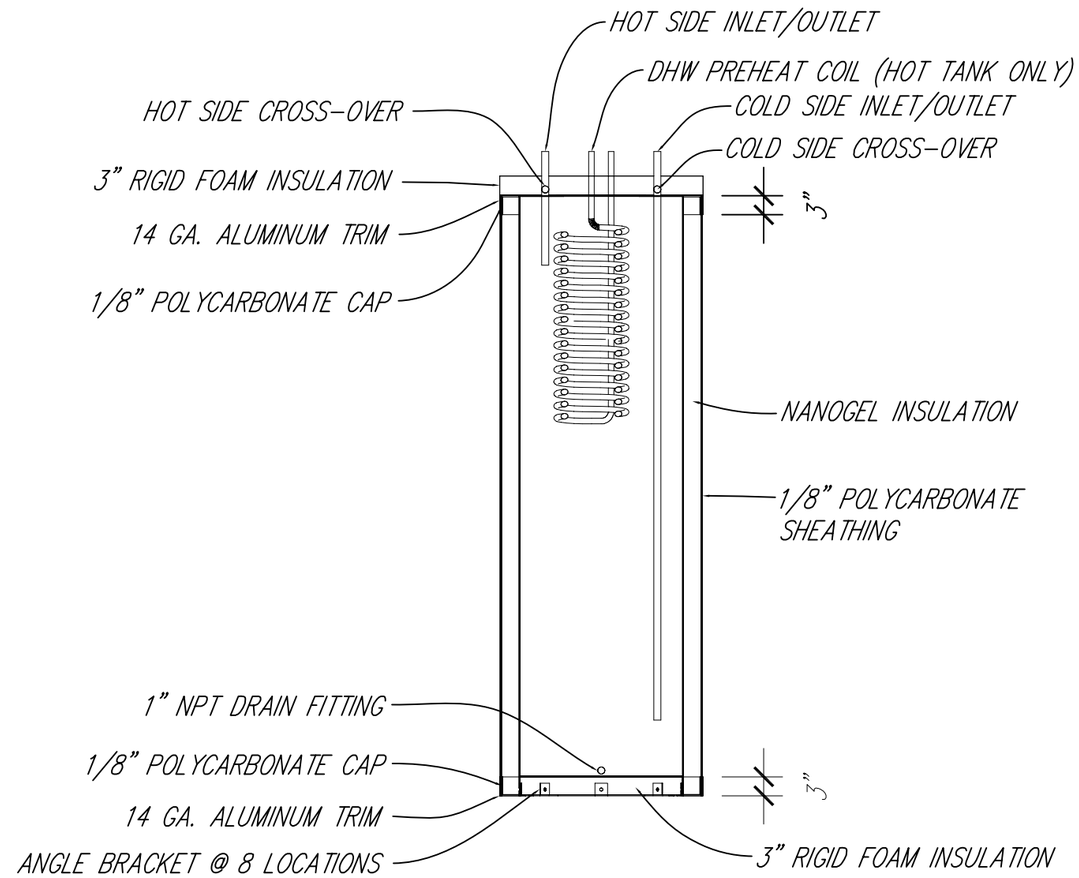

A TANK ASSEMBLY SECTION
1/2" – 1'-0"

Drawn by	Date
C.Corbin	August 7, 2007
Revised	Date

2007 Solar Decathlon

Thermal Storage Tank

University of Colorado at Boulder
Civil, Environmental, and Architectural Engineering
428 UCB, Room ECCE 441
Boulder, CO 80309-0428

0 6" 1' 2' 4'

M6.42

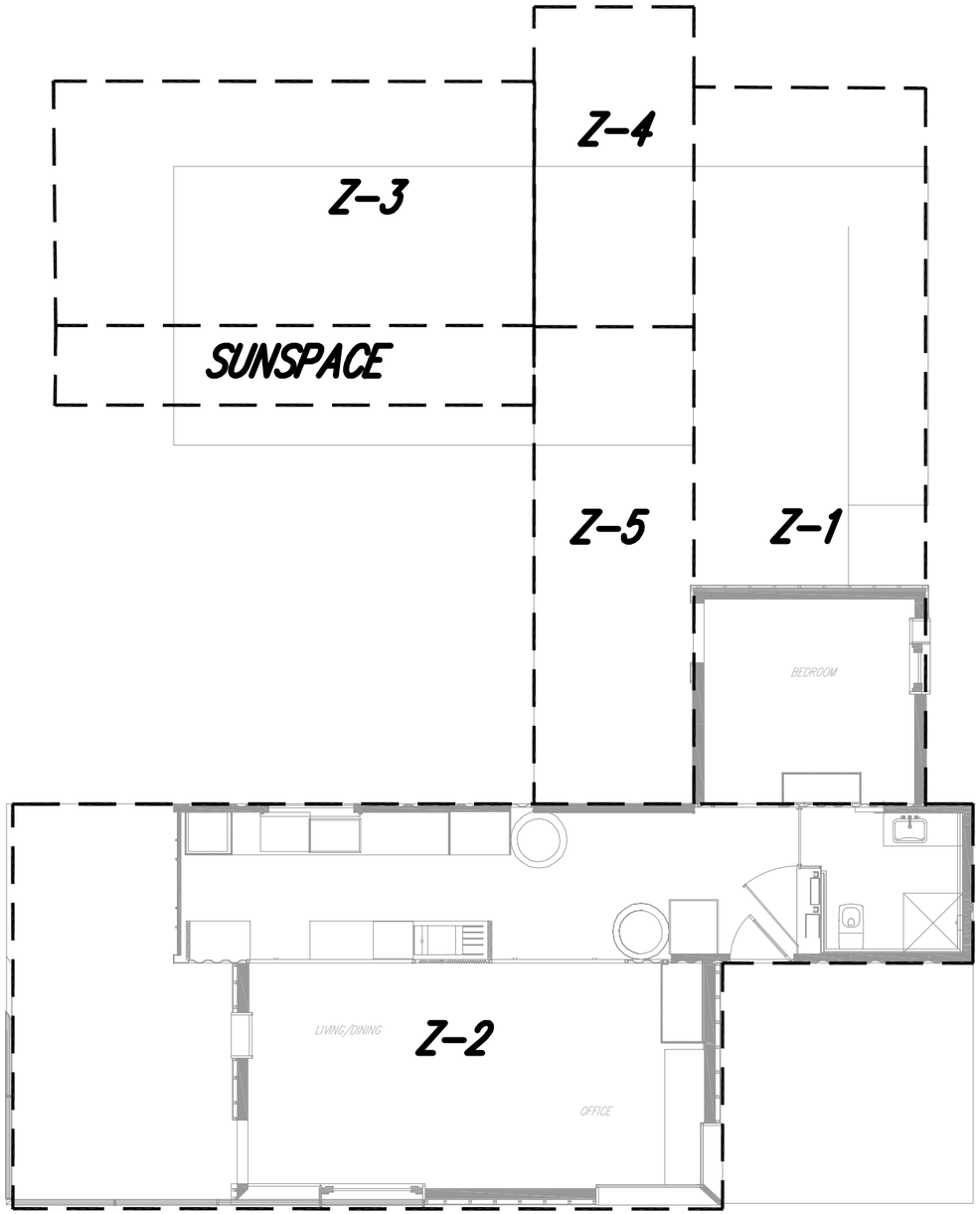

1 COMPLETE HOUSE HVAC ZONING PLAN
N.T.S.

BUILDING LOADS

ZONE	DESCRIPTION	PHASE	CNTL. VLV.	COIL	HEATING BTU/HR	COOLING BTU/HR
Z-1	BEDROOM (FUTURE STUDY)	COMPETITION	CV-1	C-1	775	500
Z-1	EAST BEDROOM	COMPLETE	CV-10	C-9	2250	2100
Z-2	SOUTH BATHROOM	COMPETITION	CV-1	C-2	975	500
Z-2	LIVING RM. - EAST HEAT EXCHANGER	COMPETITION	CV-1	C-3	6750	5075
Z-2	LIVING RM. - WEST HEAT EXCHANGER	COMPETITION	CV-1	C-4	3375	2550
Z-3	NORTH BEDROOMS	COMPLETE	CV-9	C-6	5000	6100
Z-4	NORTH BATH - EXTERIOR	COMPLETE	CV-9	C-7	550	700
Z-4	NORTH BATH - INTERIOR	COMPLETE	CV-9	C-8	165	350
Z-5	CORRIDOR	COMPLETE	CV-10	C-10	1050	1250
				TOTAL	20890	19125

Drawn by C. Corbin
Date August 7, 2007
Revised
Date

Complete House HVAC Zoning Plan
2007 Solar Decathlon

University of Colorado at Boulder
Civil, Environmental, and Architectural Engineering
428 UCB, Room ECCE 441
Boulder, CO 80309-0428

M7.01

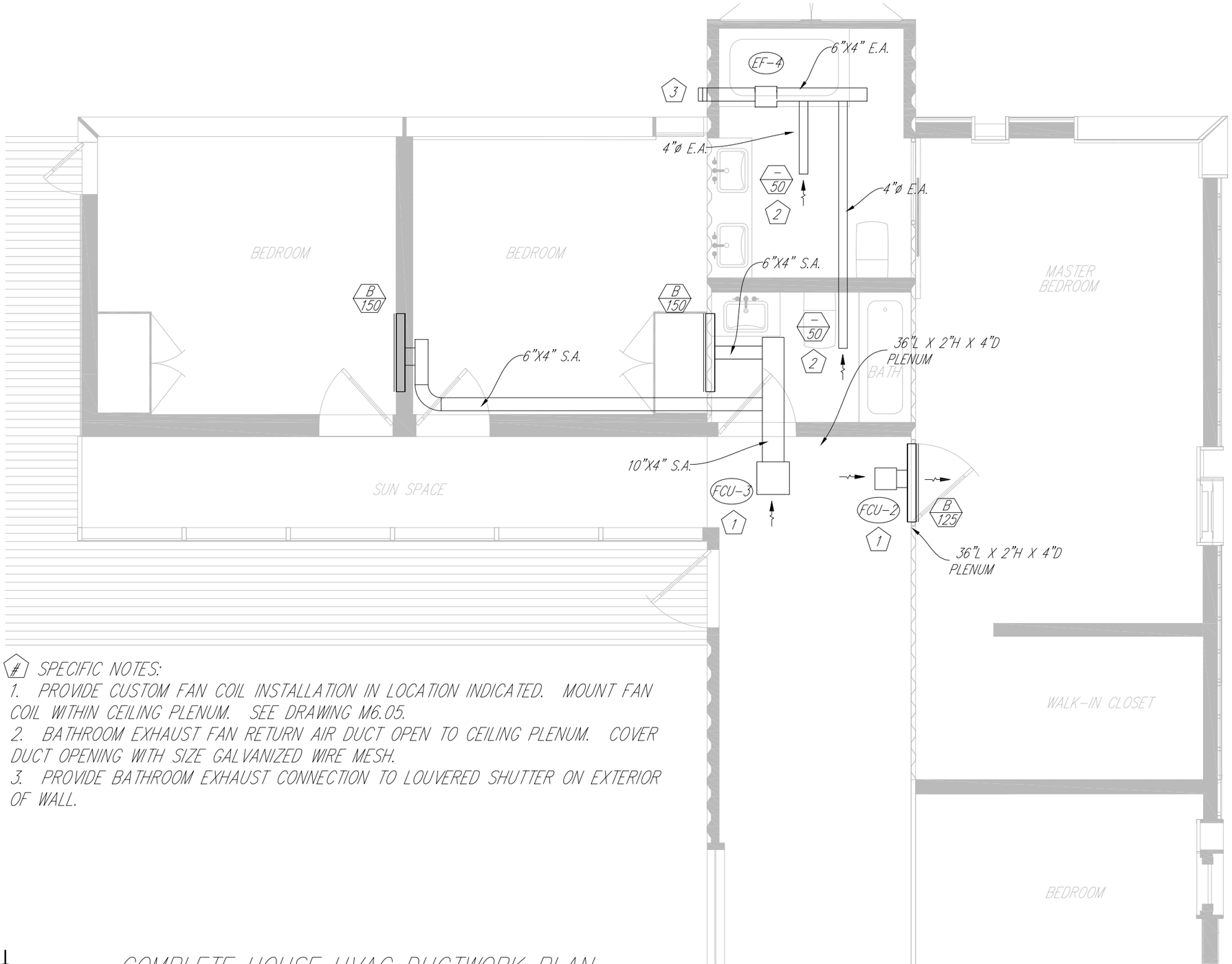

SPECIFIC NOTES:

1. PROVIDE CUSTOM FAN COIL INSTALLATION IN LOCATION INDICATED. MOUNT FAN COIL WITHIN CEILING PLENUM. SEE DRAWING M6.05.
2. BATHROOM EXHAUST FAN RETURN AIR DUCT OPEN TO CEILING PLENUM. COVER DUCT OPENING WITH SIZE GALVANIZED WIRE MESH.
3. PROVIDE BATHROOM EXHAUST CONNECTION TO LOUVERED SHUTTER ON EXTERIOR OF WALL.

1 COMPLETE HOUSE HVAC DUCTWORK PLAN

1/4" = 1'-0"

Drawn by J.S. McNeill
Date August 7, 2007
Revised
Date

Complete House HVAC Ductwk. Plan 2007 Solar Decathlon

University of Colorado at Boulder
Civil, Environmental, and Architectural Engineering
428 UCB, Room ECCE 441
Boulder, CO 80309-0428

0 1' 2' 4' 8'

M7.11

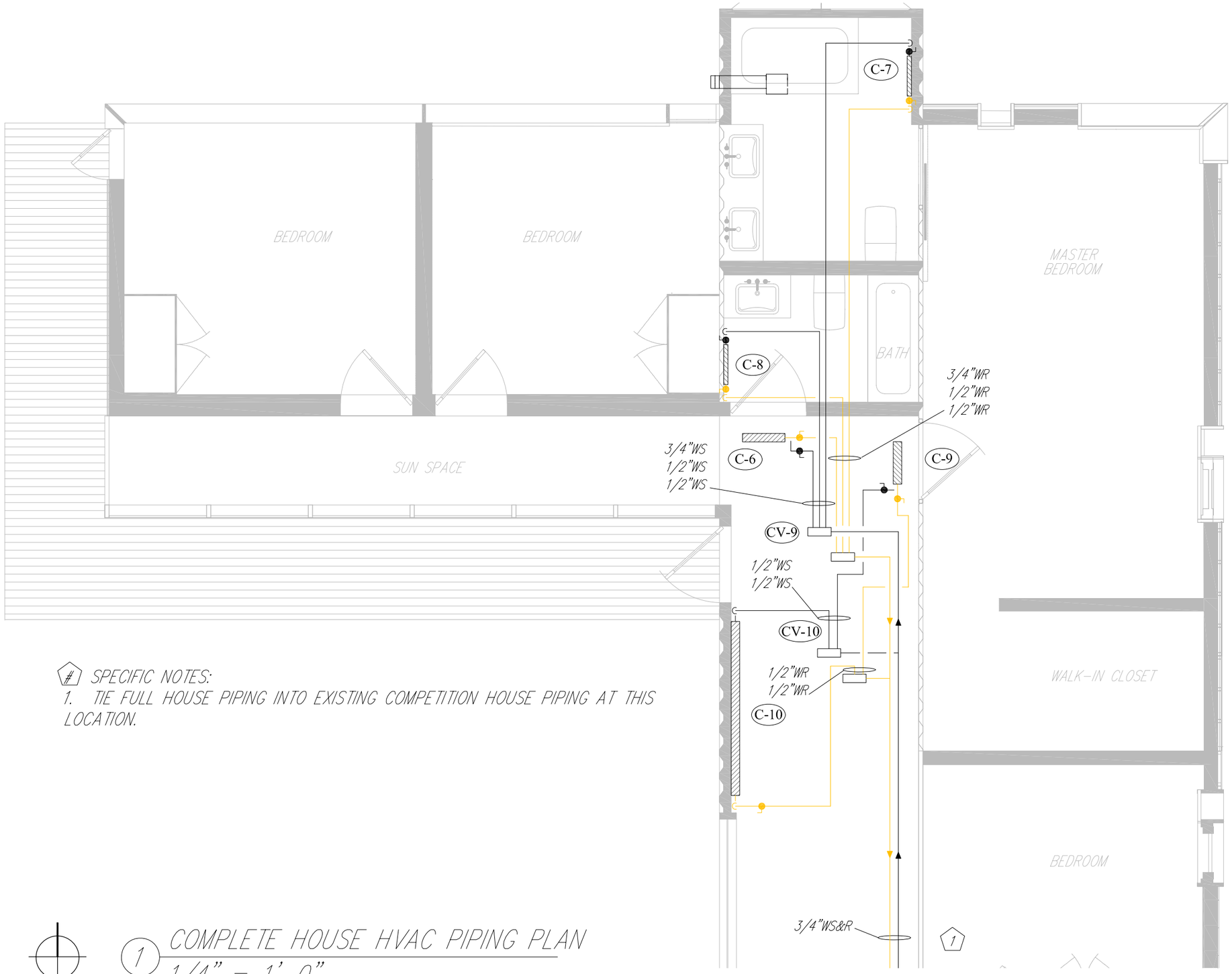

SPECIFIC NOTES:

1. TIE FULL HOUSE PIPING INTO EXISTING COMPETITION HOUSE PIPING AT THIS LOCATION.

1 COMPLETE HOUSE HVAC PIPING PLAN

1/4" = 1'-0"

Drawn by	Date
J.S. McNeill	August 7, 2007
Revised	Date

Complete House HVAC Piping Plan

2007 Solar Decathlon

University of Colorado at Boulder
Civil, Environmental, and Architectural Engineering
428 UCB, Room ECCE 441
Boulder, CO 80309-0428

0 1' 2' 4' 8'

M7.21

GENERAL MECHANICAL NOTES:
1. THE PROJECT CONSISTS OF TWO PHASES. THE FIRST PHASE CONSISTS OF THE CONSTRUCTION OF A SMALLER MODULE THAT WILL BE USED DURING THE SOLAR DECATHLON COMPETITION IN WASHINGTON D.C. THE SECOND PHASE CONSISTS OF AN ADDITION TO THE NORTH AND WEST OF THE COMPETITION MODULE. THE COMPLETE HOUSE HVAC WILL BE SUPPORTED FROM THE COMPETITION MODULE HVAC SYSTEMS.

GENERAL MECHANICAL DUCTWORK NOTES:
1. ALL DUCTWORK SHALL BE INSTALLED PER ACCA MANUAL D – RESIDENTIAL DUCT SYSTEMS AND CEE RESIDENTIAL HVAC INSTALLATION SPECIFICATION: SUPPLEMENTARY DOCUMENT, DUCT INSTALLATION AND SEALING SPECIFICATION (HTTP://WWW.CEE1.ORG/RESID/RS-AC/HVAC.PHP3).
2. DUCT INSULATION IS ONLY REQUIRED ON VENTILATION AIR DUCTWORK AND DUCTWORK ON THE SUPPLY-SIDE OF FAN COIL UNITS.
3. FLEX DUCT MAY BE USED, WITH A MAXIMUM FLEX DUCT LENGTH OF 5 FT.
4. SEE SPECIFICATIONS FOR ACCEPTABLE DUCTWORK SPECIALTIES. EQUIPMENT MAY BE SUBSTITUTED WITH AN EQUIVALENT MANUFACTURER.

GENERAL MECHANICAL PIPING NOTES:
1. ALL HYDRONIC PIPING SHALL BE TYPE L COPPER WITH WROUGHT FITTINGS.
2. PIPING SHALL BE INSULATED WITH INSULATION PER ASHRAE 90.2–2004 AND 2003 INTERNATIONAL ENERGY CONSERVATION CODE, WHICHEVER IS MORE STRINGENT. ALL INSULATION SHALL BE CLOSED CELL FOAM PER SPECIFICATIONS.
3. ALL HYDRONIC FLUID SHALL BE 40% FOOD GRADE PROPYLENE GLYCOL FLUID. FILLS POINT FOR SYSTEM IS AT HOT AND COLD TANK. PROPYLENE GLYCOL IS NOT TO BE USED AS A HEAT TRANSFER FLUID IN THE DHW HEAT PUMP LOOP. THE DHW HEAT PUMP LOOP SHALL USE WATER AS A HEAT TRANSFER FLUID.
4. PROPYLENE GLYCOL IS NOT TO BE USED DURING THE COMPETITION. WATER ONLY WILL BE USED AS A HEAT TRANSFER FLUID DURING THE COMPETITION.
5. SEE SPECIFICATIONS FOR ACCEPTABLE PIPE SPECIALTIES. EQUIPMENT MAY BE SUBSTITUTED WITH AN EQUIVALENT MANUFACTURER.

HVAC PIPING LEGEND

C	ZONE HEATING/COOLING COIL
CT	COLD WATER/ICE STORAGE TANK
HP	HEAT PUMP
HT	HOT WATER STORAGE TANK
HX	HEAT EXCHANGER
OFC	OUTDOOR FAN COIL UNIT
P	CIRCULATION PUMP
PVT	PHOTOVOLTAIC THERMAL COLLECTOR
XT	EXPANSION TANK
WS	HYDRONIC WATER SUPPLY
WR	HYDRONIC WATER RETURN

HVAC DUCTWORK LEGEND

C	ZONE HEATING/COOLING COIL
EA	EXHAUST AIR
EF	EXHAUST FAN
GR	GRILLE/REGISTER
MD	MOTOR CONTROL DAMPER
RA	RETURN AIR
SF	SUPPLY FAN
SA	SUPPLY AIR
VA	VENTILATION AIR
VF	VENTILATION FAN
VD	VOLUME DAMPER

HVAC ABBREVIATIONS

AFF.	ABOVE FINISHED FLOOR
DN.	DOWN
BOD	BOTTOM OF DUCT
TOD	TOP OF DUCT

HVAC SYSTEM ABBREVIATIONS

HPCT	HEAT PUMP/COLD TANK SUPPLY PIPING
HPCT	HEAT PUMP/COLD TANK RETURN PIPING
HPHT	HEAT PUMP/HOT TANK SUPPLY PIPING
HPHT	HEAT PUMP/HOT TANK RETURN PIPING
HPDHW	HEAT PUMP/DOMESTIC HOT WATER SUPPLY PIPING
HPDHW	HEAT PUMP/DOMESTIC HOT WATER RETURN PIPING
WLCT	HYDRONIC WATER LOOP/COLD TANK SUPPLY PIPING
WLCT	HYDRONIC WATER LOOP/COLD TANK RETURN PIPING
WLHT	HYDRONIC WATER LOOP/HOT TANK SUPPLY PIPING
WLHT	HYDRONIC WATER LOOP/HOT TANK RETURN PIPING
LOAD	BUILDING LOADS SUPPLY
LOAD	BUILDING LOADS RETURN
PVT	PHOTOVOLTAIC THERMAL SUPPLY PIPING
PVT	PHOTOVOLTAIC THERMAL RETURN PIPING
OFC	OUTDOOR FAN COIL SUPPLY PIPING
OFC	OUTDOOR FAN COIL RETURN PIPING

HVAC PIPING SYMBOLS

- 3-WAY CONTROL VALVE
- 2-WAY CONTROL VALVE
- BALANCE VALVE
- BALL VALVE
- CIRCULATION PUMP
- PIPE STRAINER
- PIPE REDUCER
- PIPE UNION
- SWING CHECK VALVE
- AIR SEPARATOR
- PRESSURE GAGE
- BACKFLOW PREVENTER

HVAC DUCTWORK SYMBOLS

- 90° ELBOW
- DUCT TAKE-OFF
- RECTANGULAR TO ROUND DUCT TRANSITION
- RECTANGULAR TO RECTANGULAR DUCT TRANSITION
- ROUND DUCT ELBOW DOWN
- RECTANGULAR DUCT ELBOW DOWN
- RECTANGULAR EXHAUST AIR DUCT ELBOW DOWN
- ROUND DUCT ELBOW UP
- RECTANGULAR DUCT ELBOW UP
- RECTANGULAR EXHAUST AIR DUCT ELBOW UP
- ROUND DUCT CONTINUATION
- RECTANGULAR DUCT CONTINUATION
- FLEXIBLE DUCTWORK
- V.D. VOLUME DAMPER
- M.D. MOTOR CONTROL DAMPER
- JET DIFFUSER NOZZLES
- AIR FLOW DIRECTION
- Tag / CFM AIR DIFFUSER TAG
- # HVAC EQUIPMENT TAG

Drawn by	Date
J.S. McNeill	August 7, 2007
Revised	Date

2007 Solar Decathlon

Mechanical Legends and Notes

University of Colorado at Boulder
Civil, Environmental, and Architectural Engineering
428 UCB, Room ECCE 441
Boulder, CO 80309-0428

M8.01

PUMP SCHEDULE

TAG	DESCRIPTION	MAKE	MODEL	SIZE	GPM	FT.HD.	ELECTRICAL	WATTS	NOTES
P-1	BUILDING LOADS CIRCULATOR	WILO	STRATOS	1.25 X 3-35	10	20	230V-1PH-60HZ	65	-
P-2	HEAT PUMP SOURCE CIRCULATOR	GRUNDFOS	UPS	26-64F	10	20	120V-1PH-60HZ	185	-
P-3	HEAT PUMP LOADS CIRCULATOR	GRUNDFOS	UPS	26-64F	10	20	120V-1PH-60HZ	185	-
P-4	PVT/OFC CIRCULATOR	WILO	STRATOS	1.25 X 3-35	10	20	230V-1PH-60HZ	65	-
P-5	HEAT PUMP DHW CIRCULATOR	GRUNDFOS	UPS	26-64F	10	20	120V-1PH-60HZ	185	-

FAN SCHEDULE

TAG	DESCRIPTION	MAKE	MODEL	CFM	E.S.P.	RPM	ELECTRICAL	WATTS	NOTES
SF-1	LIVING ROOM SUPPLY FAN	FANTECH	FRD 12-6	175	0.375 IN. W.G.	2545	120V-1PH-60HZ	85	PROVIDE WITH VARIABLE SPEED CONTROL
VF-1	VENTILATION FAN	FANTECH	FR100	55	0.25 IN. W.G.	2900	120V-1PH-60HZ	19	PROVIDE WITH INSULATED BACKDRAFT DAMPER
EF-1	BATHROOM EXHAUST FAN	FANTECH	FR100	55	0.25 IN. W.G.	2900	120V-1PH-60HZ	19	PROVIDE WITH INSULATED BACKDRAFT DAMPER
EF-2	ELECTRICAL COOLING FAN	FANTECH	FR100	55	0.375 IN. W.G.	2900	120V-1PH-60HZ	19	PROVIDE WITH INSULATED BACKDRAFT DAMPER
EF-3	KITCHEN EXHAUST FAN	FANTECH	RVF6	100	0.75 IN. W.G.	-	120V-1PH-60HZ	92	-
EF-4	BATHROOM EXHAUST FAN (FUTURE)	FANTECH	FR125	100	0.375 IN. W.G.	2950	120V-1PH-60HZ	18	PROVIDE WITH INSULATED BACKDRAFT DAMPER
FCU-1	BEDROOM FCU FAN	LYTRON	102076	40	0.20 IN. W.G.	3100	120V-1PH-60HZ	15	SEE DRAWING M6.05
FCU-2	BEDROOM FCU FAN (FUTURE)	LYTRON	102076	40	0.20 IN. W.G.	3100	120V-1PH-60HZ	15	SEE DRAWING M6.05
FCU-3	BEDROOM FCU FAN (FUTURE)	LYTRON	102076	40	0.20 IN. W.G.	3100	120V-1PH-60HZ	15	SEE DRAWING M6.05

DIFFUSER SCHEDULE

TAG	DESCRIPTION	MAKE	MODEL	CFM	A.P.D.	SIZE	FINISH	NOTES
A	LIVING ROOM JET DIFFUSER	AIR CONCEPTS	APL-04/04A	22	0.05 IN. W.G.	4"ø	#00 ALUMINUM MILL	PROVIDE WITH APERTURE DAMPER
B	BEDROOM LINEAR BAR GRILLE	CARNES	CCNBG	75	0.01 IN. W.G.	2"	STANDARD	35-1/8"W X 2"H

Drawn by J.S. McNeill
Date August 7, 2007
Revised
Date

2007 Solar Decathlon

University of Colorado at Boulder
Civil, Environmental, and Architectural Engineering
428 UCB, Room ECCE 441
Boulder, CO 80309-0428

Mechanical Schedules

M8.02

HYDRONIC COIL SCHEDULE

COIL	DESCRIPTION	PHASE	CNTL. VLV.	AIR FLOW CFM	WATER FLOW GPM	HEATING BTU/HR	E.W.T °F	L.W.T °F	COOLING BTU/HR	E.W.T °F	L.W.T °F	NOTES:
C-1	BEDROOM (FUTURE STUDY)	COMPETITION	CV-1	50	0.5	775	100	95	500	50	55	SEE DRAWING M6.05
C-8	EAST BEDROOM	COMPLETE	CV-10	125	1.0	2250	100	95	2100	50	55	SEE DRAWING M6.05
C-2	SOUTH BATHROOM	COMPETITION	CV-1	–	0.5	975	100	95	500	50	55	SEE DRAWING M6.02 THRU M6.04
C-3	LIVING RM. – EAST HEAT EXCH. 1	COMPETITION	CV-1	125	2.75	5750	100	95	4075	50	55	SEE DRAWING M6.02 THRU M6.04
C-4	LIVING RM. – EAST HEAT EXCH. 2	COMPETITION	CV-1	–	0.5	1000	100	95	1000	50	55	SEE DRAWING M6.02 THRU M6.04
C-5	LIVING RM. – WEST HEAT EXCHANGER	COMPETITION	CV-1	50	1.5	3375	100	95	2550	50	55	SEE DRAWING M6.02 THRU M6.04
C-6	NORTH BEDROOMS	COMPLETE	CV-9	300	2.5	5000	100	95	6100	50	55	SEE DRAWING M6.05
C-7	NORTH BATH – EXTERIOR	COMPLETE	CV-9	–	0.5	550	100	95	700	50	55	SEE DRAWING M6.02 THRU M6.04
C-9	NORTH BATH – INTERIOR	COMPLETE	CV-9	–	0.5	165	100	95	350	50	55	SEE DRAWING M6.02 THRU M6.04
C-10	CORRIDOR	COMPLETE	CV-10	–	0.5	1050	100	95	1250	50	55	SEE DRAWING M6.02 THRU M6.04

FAN COIL UNIT SCHEDULE

TAG	DESCRIPTION	MAKE	MODEL	CFM	E.F.T.	E.A.T.	HEAT CAP.	ELECTRICAL	WATTS	NOTES
OFC-1	OUTDOOR FAN COIL UNIT	LYTRON	6340G2	10	120 F	100 F	2 MBTUH	120V-1PH-60HZ	240	–
OFC-2	OUTDOOR FAN COIL UNIT	LYTRON	6340G2	10	120 F	100 F	2 MBTUH	120V-1PH-60HZ	240	–
OFC-3	OUTDOOR FAN COIL UNIT	LYTRON	6340G2	10	120 F	100 F	2 MBTUH	120V-1PH-60HZ	240	–

PHOTOVOLTAIC-THERMAL SCHEDULE

TAG	DESCRIPTION	MAKE	MODEL	NOTES
PVT-1	PVT COLLECTOR	THERMODYNAMICS	SUNSTRIP	SEE DRAWING M6.31
PVT-2	PVT COLLECTOR	THERMODYNAMICS	SUNSTRIP	SEE DRAWING M6.31
PVT-3	PVT COLLECTOR	THERMODYNAMICS	SUNSTRIP	SEE DRAWING M6.31

WATER STORAGE TANK SCHEDULE

TAG	DESCRIPTION	MAKE	DIMENSIONS	SIZE	ICE CAP.	ICE TYPE	TYPE	INSULATION	NOTES
HT	HOT WATER THERMAL STORAGE TANK	CUSTOM	28"øx96"H	240 GAL.	NO	NO	ATMOSPHERIC	R-28	–
CT	COLD WATER/ICE THERMAL STORAGE TANK	CUSTOM	28"øx96"H	240 GAL.	25 TON-HRS	CRYOGEL	ATMOSPHERIC	R-28	–

Drawn by J.S. McNeill
Date August 7, 2007
Revised
Date

2007 Solar Decathlon

University of Colorado at Boulder
Civil, Environmental, and Architectural Engineering
428 UCB, Room ECCE 441
Boulder, CO 80309-0428

Mechanical Schedules

M8.03

EXPANSION TANK SCHEDULE

TAG	DESCRIPTION	MAKE	MODEL	VOLUME	DIMENSIONS	NOTES
XT-1	HYDRONIC EXPANSION TANK	HONEYWELL	TX-5-C	2.0 GAL.	10" DIAM. X 10-3/8"H	-

DHW HEATER SCHEDULE

TAG	DESCRIPTION	MAKE	MODEL	RECOVERY	DIMENSIONS	NOTES
DHW	INDIRECT WATER HEATER	BRADFORD WHITE	SW-2-30-L	429 GAL. @ 115F	20" DIAM. X 30"H	-

THERMOSTATIC MIXING VALVE SCHEDULE

TAG	DESCRIPTION	MAKE	MODEL	SIZE	NOTES
TMV	THERMOSTATIC MIXING VALVE	HONEYWELL	AMX-102\-UT-1	1" NPT	ASSE 1017 CERTIFIED. SET TO 120 F OUTLET TEMPERATURE

CONTROL VALVE SCHEDULE

TAG	DESCRIPTION	COIL	MAKE	MODEL	SIZE	TYPE	OPER.	FLOW	ELECTRICAL	NOTES
CV-1	MULTI ZONE CONTROL VALVE	C-1 TO C-5	HONEYWELL	SZ3T1	3/4 IN.	2-WAY	2-POS.	5.0 GPM	24 VAC	-
CV-2	BUILDING SUPPLY ISOLATION VALVE	-	HONEYWELL	VC8715AM1000	1 IN.	3-WAY	2-POS.	10 GPM	24 VAC	-
CV-3	BUILDING RETURN ISOLATION VALVE	-	HONEYWELL	VC8715AM1000	1 IN.	3-WAY	2-POS.	10 GPM	24 VAC	-
CV-4	OUTDOOR SUPPLY ISOLATION VALVE	-	HONEYWELL	VC8715AM1000	1 IN.	3-WAY	2-POS.	10 GPM	24 VAC	-
CV-5	OUTDOOR RETURN ISOLATION VALVE	-	HONEYWELL	VC8715AM1000	1 IN.	3-WAY	2-POS.	10 GPM	24 VAC	-
CV-6	PVT ISOLATION VALVE	-	HONEYWELL	VC8715AM1000	1 IN.	2-WAY	2-POS.	10 GPM	24 VAC	-
CV-7	OFC ISOLATION VALVE	-	HONEYWELL	VC8715AM1000	1 IN.	2-WAY	2-POS.	10 GPM	24 VAC	-
CV-8	BUILDING BYPASS VALVE	-	HONEYWELL	VC8715AM1000	1 IN.	3-WAY	MOD.	10 GPM	24 VAC	-
CV-9	MULTI ZONE CONTROL VALVE (FUTURE)	C-6 TO C-8	HONEYWELL	SZ3T1	3/4 IN.	2-WAY	2-POS.	2.5 GPM	24 VAC	-
CV-10	MULTI ZONE CONTROL VALVE (FUTURE)	C-9 AND C-10	HONEYWELL	SZ3T1	3/4 IN.	2-WAY	2-POS.	1.5 GPM	24 VAC	-

Drawn by J.S. McNeill
Date August 7, 2007
Revised
Date

2007 Solar Decathlon

University of Colorado at Boulder
Civil, Environmental, and Architectural Engineering
428 UCB, Room ECCE 441
Boulder, CO 80309-0428

Mechanical Schedules

M8.04

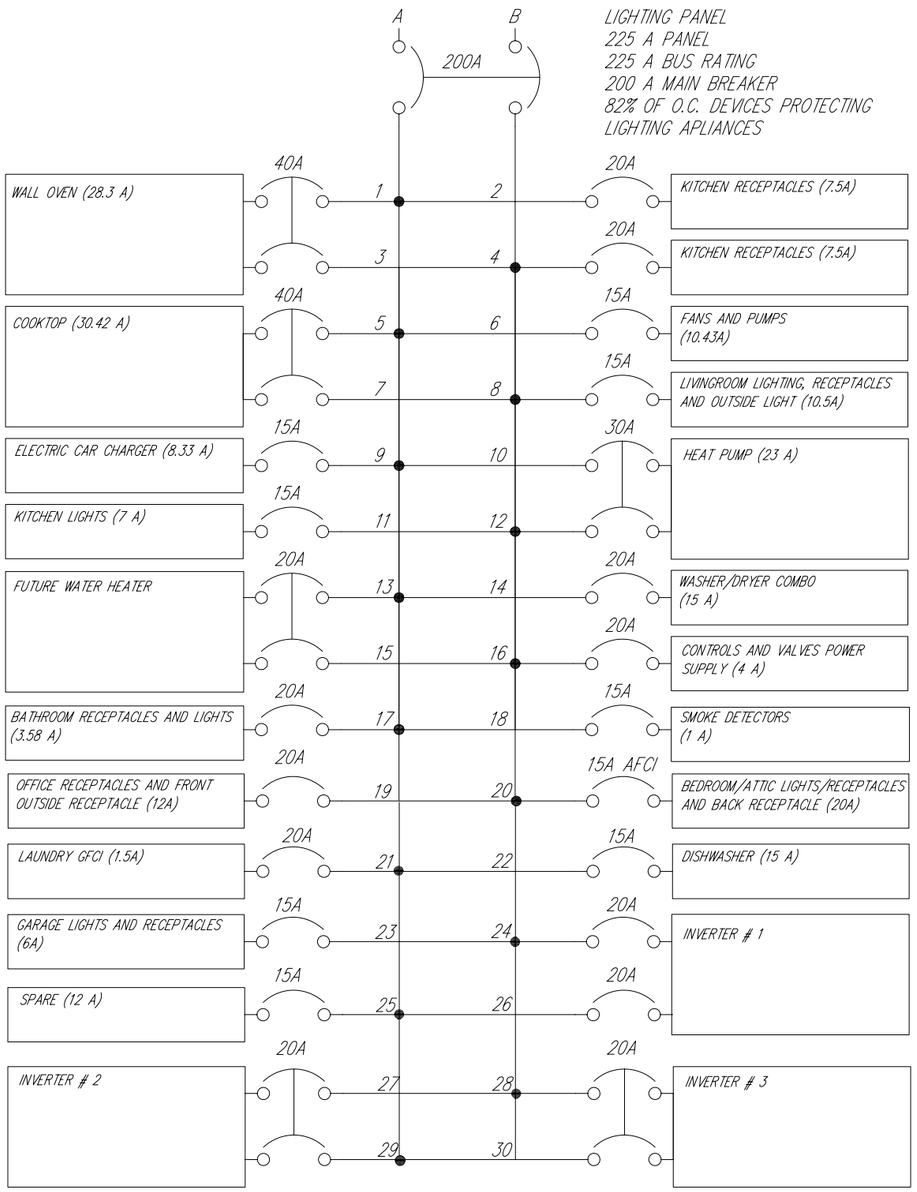

TOTAL LOAD PHASE A: 143.23 A PERCENT IMBALANCE: 6.78% TOTAL LOAD PHASE B: 134.13 A

1 PANEL SCHEDULE

PANEL SCEDULE TO BE LOCATED IN PANEL LAC

1	WALL OVEN (40A)	KITCHEN RECEPTACLES (20A)	2
3		KITCHEN RECEPTACLES (20 A)	4
5	COOKTOP (40A)	FANS AND PUMPS (15A)	6
7		LIVINGROOM LIGHTING, RECEPTACLES AND OUTSIDE LIGHT (20 A)	8
9	ELECTRIC CAR CHARGER (15 A)	HEAT PUMP (30 A)	10
11	KITCHEN LIGHTS (7 A)		12
13	FUTURE WATER HEATER	WASHER/DRYER COMBO (15 A)	14
15		CONTROLS AND VALVES POWER SUPPLY (15A)	16
17	BATHROOM RECEPTACLES AND LIGHTS (15A)	SMOKE DETECTORS (15 A)	18
19	OFFICE RECEPTACLES AND FRONT OUTSIDE RECEPTACLE (20A)	BEDROOM/ATTIC LIGHTS/RECEPTACLES AND BACK RECEPTACLE (20A)	20
21	LAUNDRY GFCI (15A)	DISHWASHER (15 A)	22
23	GARAGE LIGHTS AND RECEPTACLES (15A)	INVERTER # 1	24
25	SPARE (15A)		26
27	INVERTER # 2	INVERTER # 3	28
29			30

2 PANEL DIRECTORY

Drawn by	Date
J.Baum	August 7, 2007
Revised	Date

2007 Solar Decathlon

University of Colorado at Boulder
Civil, Environmental, and Architectural Engineering
428 UCB, Room ECCE 441
Boulder, CO 80309-0428

Panel Schedule and Label

0 6" 1' 2' 4'
NTS

E0.01

Panels- SunPower SPR 215 (215W per panel)
Inverter- SunPower SPR-x 3.3 (3.3 kW)
Array- 4 strings of 8 panels and 1 string of nine panels

Total System Power= (8 x 4 x 215W) + (9 x 215W) = **8815 W**

4x8 panel strings		**# in string**	**# of strings**	**Correction Factors**	**Total**
V_{oc}=	48.3 V per panel				
V_{oc}=	48.3 V	8			386.4 V per string
V_{oc}=	48.3 V	8		x 1.25 (-40°F Ambient Temp)	**483 V per string**
V_{mp}=	39.8 V per panel				
V_{mp}=	39.8 V	8			318.4 V per string
I_{sc}=	5.80 A per string				
I_{sc}=	5.80 A		1		5.8 A
I_{sc}=	5.80 A		1	x 1.25 (Continuous Current) x 1.25 (Extra Irradiance)	**9.0625 A**
I_{mp}=	5.40 A per string				
I_{mp}=	5.40 A		1		5.40 A
1x9 panel string					
V_{oc}=	48.3 V per panel				
V_{oc}=	48.3 V	9			434.7 V per string
V_{oc}=	48.3 V	9		x 1.25 (-40°F Ambient Temp)	543.375 V per string
V_{mp}=	39.8 V per panel				
V_{mp}=	39.8 V	9			358.2 V per string
I_{sc}=	5.80 A per string				
I_{sc}=	5.80 A		1		5.8 A
I_{sc}=	5.80 A		1	x 1.25 (Continuous Current) x 1.25 (Extra Irradiance)	**9.0625 A**
I_{mp}=	5.40 A per string				
I_{mp}=	5.40 A		1		5.40 A

Inverter Information	
# of units:	3
make:	SunPower
model:	SPR-3300x
rated wattage:	3300
V input range (DC):	195-600
V output (AC):	240
Max Continuous output Current:	13.8A
# Phases:	single
frequency:	60 Hz
UL Listing:	1741- 01

1 PV CALCULATIONS

1) Conductors from PV panels to Jbox
10 Current carrying conductors
#10 USE-2 cable from panels- manufacturer provided
NEC 310.17 #10 USE-2 in free air = 55A
temp de-rating for 71-80 C = 55A x .41 = **22.55A**

2) Conductors from Jbox to Inverter
10 Current carrying conductors
NEC 310.16 #10 THWN-2 in conduit ampacity = 40A
NEC 310.10 FPN #2 temp de-rating for 61 - 70 C = 40A x .58 = 23.2A
NEC 310.15 Conduit fill derate 23.2 x .8 = **18.56A**
Internal DC disconnect rated for 20A

3) Inverter (AC wiring) to Breaker Panel - maximum continuous output current = 13.8A
Overcurrent protection required for inverter output: 13.8 x 1.25 = **17.25A**
Use 20A Overcurrent protection and wire
6 current carrying conductors (2 per inverter)
NEC 310.16 #10 THHN in conduit ampacity = 40A
No temp de-rating, assume 30 C
NEC 240.(D) Max ampacity for #10 THHN = 30A
NEC 310.15(B)(2) Wireway de-rating: 40A x .7 = **28A**

All Equipment grounding conductors for PV's - #10 AWG

2 DC CONDUCTOR SIZING CALCULATIONS

GT Inverter Information	
# of units:	3
make:	SunPower
model:	SPR-3300x
rated wattage:	3300
V input range (DC):	165-600
V output (AC):	240
Max Continuous output Current:	13.8A
# Phases:	single
frequency:	60 Hz
UL Listing:	1741- 01

XW6048- 120/240-60 Inverter Information		
Continuous Output Power		6000 W
Surge Rating (10 seconds)		12000 W
Surge Current	L-n:	105 A_{rms} (7 sec)
	L-L:	52.5 A_{rms} (7 sec)
CEC Weighted Efficiency		93.5%
DC Input voltage range		44-64 v
Battery breakers		**250 A**

Cable from Batteries to Inverters

NEC 310.16 4/0 MTW/THW in conduit ampacity =		230 A
temp de-rating for 41 - 45°C = 230A x 0.82=		188.6 A
Parallel runs: 188.6 x 2=		**377.2** A
6000W / 44v / 0.935=		145.84 A
145.84	x1.25=	**182.30** A

Battery Information	
Battery Voltage	6 v
# in string	8
# of strings	6
Amp hours per Battery	370 A-h
Voltage per string	48 v
Amp hours total	2220 A-h @ 48v
Battery Bank Capacity	2220 Watt-hours

4 BATTERY CABLE SIZING CALCULATIONS

PV NEC

NEC 690.7
Lowest Ambient temperature in Colorado: -40
Correction Factor: 1.25

NEC 690.8
(1) Maximum current shall be the sum of the parallel module rated short circuit currents multiplied by 125%.

NEC 690.14 (C)(1)
Exception: Installations that comply with 690.31(E) shall be permitted to have the disconnecting means located remote from the point of entry of the system conductors.

NEC 690.31 (E)
Where source or output circuits are run inside the building, they shall be contained in metallic raceways from the point of penetration to the first disconnecting means.

NEC 690.47 (C)(2)
The dc and ac grounding electrode conductors shall be connected to a single electrode the separate electrode conductors shall be sized as required by 250.66 and 250.166.

3 RELAVENT NEC ARTICLES

Drawn by	Date
J.Baum	August 7, 2007
Revised	Date

2007 Solar Decathlon

University of Colorado at Boulder
Civil, Environmental, and Architectural Engineering
428 UCB, Room ECCE 441
Boulder, CO 80309-0428

DC Calculations

0 6" 1' 2' 4'
NTS

E0.02

Appliance	Amp	Voltage	VA
Cook Top	30.00	240	7200
Wall Oven	28.30	240	6792
Dishwasher	15.00	120	1800
Washer / Dryer	15.00	120	1800
Refrigerator	0.58	120	70

Sizing of the Service-entrance Conductors Using the Standard Method

A. Design of Conductors for Phases

	NEC Section	Explanation or Calculation
General Loads		
General Lighting Circuits	220.42	
800 square feet		
6623.2 VA 800 *3VA= 2,400		
Small Appliance Branch Circuits	210.11 (C)(1)	
3,000 VA		
Laundry Branch Circuits	210.11 (C)(11)	
1,500 VA	220.82 (B)(2)	
Total General Load = 11,123 VA		Total general lighting load is the general lighting load + small appliance loads
Demand Load = **5,843 VA**	220.42	Demand load is 100% x the first 3000 VA + 35% x the remaining VA
Fixed Appliance Load		
Dishwasher, Washing Machine		
Demand Load = **7,794 VA**	220.53	(Sum of VA's)*0.75
Special Appliances		
Dryer 1,800 VA	220.54	
+ Range 5,760 VA	220.55	Range is 0.8 x Rated VA
DL = **7,560 VA**		
Total Demand Load = 21,197 VA		Sum of the demand loads
I_{Load} = **88.3 A**		Total demand load / 240V
Size of THW (Cu) Conductor (For a 200 amp Panel according to future expansion plans) **4/0**	310.15(B)(6)	
Size of Main Breaker **200 A, 2P**		

1 CONDUCTOR SIZING CALCULATIONS

B. Design of Conductors for Neutral

General Loads		
Demand Load = **5,843 VA**		
Fixed Appliance Load		
Demand Load = **3,353 VA**		
Special Appliances		
Dryer 910 VA		Apply a Demand Factor of 0.7 to Dryers and Ranges
Range 4,032 VA		
DL = **4,942 VA**		
Total Demand Load = 14,138 VA		
I_{Load} = **58.9 A**		Total demand load [VA] / 240 [V]
Size of THW (Cu) Conductor for Neutral **#2**	Table 310.16	
Size of Grounding Electrode Conductor **#2**	Table 250.66	
Size of Equipment Grounding Conductors **#6**	Table 250.122	

2 NEUTRAL CONDUCTOR SIZING CALCULATIONS

D. Conduit Fill Calculations

Location	Insulation	Size	Area [in^2]	Quantity	Total Area	NEC Section
1) PDP to Panelboard	THW	4/0	0.3718	3	1.1154	350 Tables 4 and 5
	THW	#6	0.0726	1	0.0726	
	Total				1.188	
	Conduit	**Size**	**40% of Area**			
	LFNC-B	2"	1.298			
2) DC Wireway to Inverters	**Insulation**	**Size**	**Number of conductors**			Annex C Table C.1
	THHN	#10	5			
	Conduit	**Size**	**Maximum number of conductors**			
	EMT	1"	16			
3) Inverters to AC WireWay	**Insulation**	**Size**	**Number of conductors**			Annex C Table C.1
	THHN	#12	3			
	Conduit	**Size**	**Maximum number of conductors**			
	EMT	1"	26			
4) AC Wireway to Panelboard	**Insulation**	**Size**	**Number of conductors**			Annex C Table C.1
	THHN	#12	9			
	Conduit	**Size**	**Maximum number of conductors**			
	EMT	1"	26			

3 CONDUIT FILL CALCULATIONS

Drawn by J.Baum | Date August 7, 2007 | Revised | Date

2007 Solar Decathlon

University of Colorado at Boulder
Civil, Environmental, and Architectural Engineering
428 UCB, Room ECCE 441
Boulder, CO 80309-0428

AC Calculations

0 6" 1' 2' 4'

NTS

E0.03

LIGHTING SYMBOL LEGEND

D-A	RECESSED LIGHT FIXTURE W/ALUMINUM TRIM
D-B	RECESSED LIGHT FIXTURE W/BLACK TRIM
F	3' BATHROOM VANITY LIGHT
F1	2' VERTICAL MNT BATHROOM VANITY LIGHT
G	BEDROOM INDIRECT
H	LED ROPE LIGHT
I	READING LIGHT
J	PENDANT FIXTURE
J1	PENDANT FIXTURE
K	LARGE FABRIC SQUARE
L	DESK LAMP
M-2	2' FLUORESCENT COVE
M-4	4' FLUORESCENT COVE
N-4	4' FLUORESCENT DIMMABLE INDIRECT
N-8	8' FLUORESCENT DIMMABLE INDIRECT
N-20	20' FLUORESCENT DIMMABLE INDIRECT
O	4' FLUORESCENT DIMMABLE RECESSED
P	RECESSED LIGHT FIXTURE W/FROSTED LENSE
V	VAPOR TIGHT LIGHT FIXTURE
DX	OUTDOOR DECK LIGHT
EX	OUTDOOR WALL LIGHT
PX	OUTDOOR PLANTER LIGHT

SWITCHING SYMBOL LEGEND

$	SINGLE POLE SWITCH
D $	DIMMER SWITCH
3 $	3-WAY SWITCH
LPC	DAYLIGHT PHOTOSENSOR
PC	PHOTOCELL

OUTLET SYMBOL LEGEND

	DUPLEX RECEPTACLE
GFCI	GFCI DUPLEX RECEPTACLE
DW	DISHWASHER DUPLEX RECEPTACLE
WP	WEATHER PROOF GFCI RECEPTACLE
OV	OVEN RECEPTACLE
W/D	WASHER/DRYER RECEPTACLE
R	RANGE RECEPTACLE
J	JUNCTION BOX FOR EQUIPMENT POWER

LOW VOLTAGE SYMBOL LEGEND

DATA	DATA OUTLET
TH	TEMPERATURE / HUMIDITY SENSOR
T	TEMPERATURE SENSOR
CO2	CO_2 SENSOR

FIRE SAFETY SYMBOL LEGEND

SD	SMOKE DETECTOR

1 SYMBOL LEGENDS

E1.02 KEYNOTE LEGEND

1	15- 1W OUTDOOR LED LUMINAIRES TO BE PLACED AROUND THE PATIO AT LIGHTING DESIGNERS DISCRETION

E1.01 KEYNOTE LEGEND

1	WIRES IN ATTIC SPACE SUBJECT TO DERATION AS PER NEC 310.16 FOOTNOTES
2	SEE EQUIPMENT SCHEDULE
3	PANEL LAC TO HAVE PROPER WORKING CLEARANCES AS PER NEC 110.26

E1.03 KEYNOTE LEGEND

1	BATTERY RACK TO BE MADE OF CORROSION RESISTANT METAL
2	ALL ELECTRICALLY ENERGIZED PARTS ARE TO HAVE PROPERLY INSULATED COVERINGS
3	BATTERY RACK TO HAVE PROPER WORKING CLEARANCES AS PER NEC 110.26
4	BATTERY STORAGE ENTRANCE IS TO HAVE SIGNAGE DECLARING THAT AUTORIZED PERSONAL ONLY IS ALLOWED
5	EXPLOSION PROOF LIGHT FIXTURES TO BE MOUNTED ABOVE EACH BATTERY SHELF
6	LUGS IN PDP WILL BE LISED FOR USE WITH FINE STRANDED CABLES

Drawn by J.Baum
Date August 7, 2007
Revised
Date

2007 Solar Decathlon

University of Colorado at Boulder
Civil, Environmental, and Architectural Engineering
428 UCB, Room ECCE 441
Boulder, CO 80309-0428

Key Notes and Symbols

0 6" 1' 2' 4'
NTS

E1.00

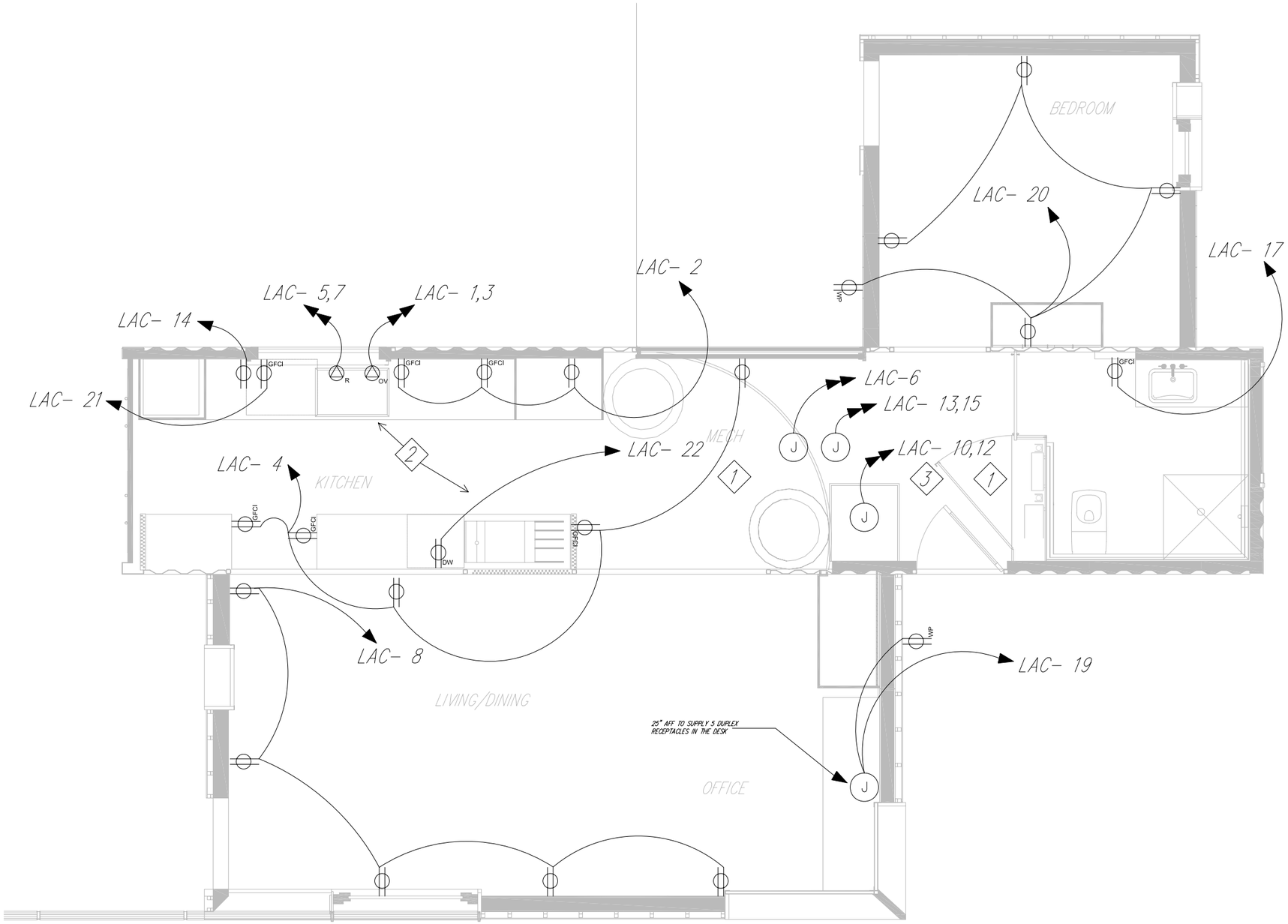

N

1 GROUND LEVEL POWER PLAN
SCALE: 1/4" = 1'

E1.01 KEYNOTE LEGEND

1	WIRES IN ATTIC SPACE SUBJECT TO DERATION AS PER NEC 310.16 FOOTNOTES
2	SEE EQUIPMENT SCHEDULE
3	PANEL LAC TO HAVE PROPER WORKING CLEARANCES AS PER NEC 110.26

Drawn by	Date
J.Baum	August 7, 2007
Revised	Date

2007 Solar Decathlon

University of Colorado at Boulder
Civil, Environmental, and Architectural Engineering
428 UCB, Room ECCE 441
Boulder, CO 80309-0428

Ground Level Power Plan

0 1' 2' 4' 8'

E1.01

E1.02 KEYNOTE LEGEND

1	15– 1W OUTDOOR LED LUMINAIRES TO BE PLACED AROUND THE PATIO AT LIGHTING DESIGNERS DISCRETION

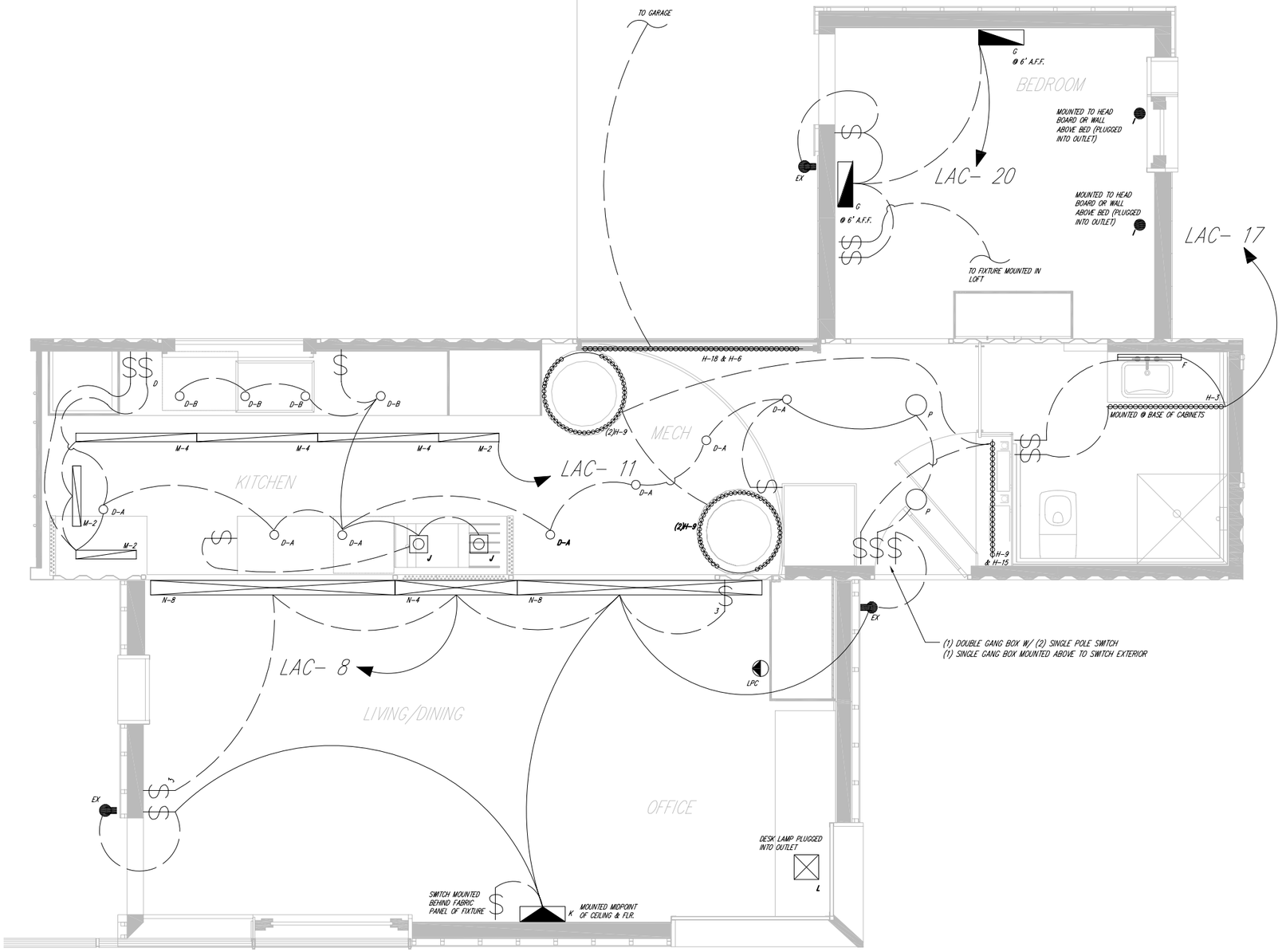

N

1 GROUND LEVEL LIGHTING PLAN
SCALE: 1' = 1/4"

Drawn by	Date
J.Baum	August 7, 2007
Revised	Date

2007 Solar Decathlon

University of Colorado at Boulder
Civil, Environmental, and Architectural Engineering
428 UCB, Room ECCE 441
Boulder, CO 80309-0428

Ground Level Lighting Plan

0 1' 2' 4' 8'

E1.02

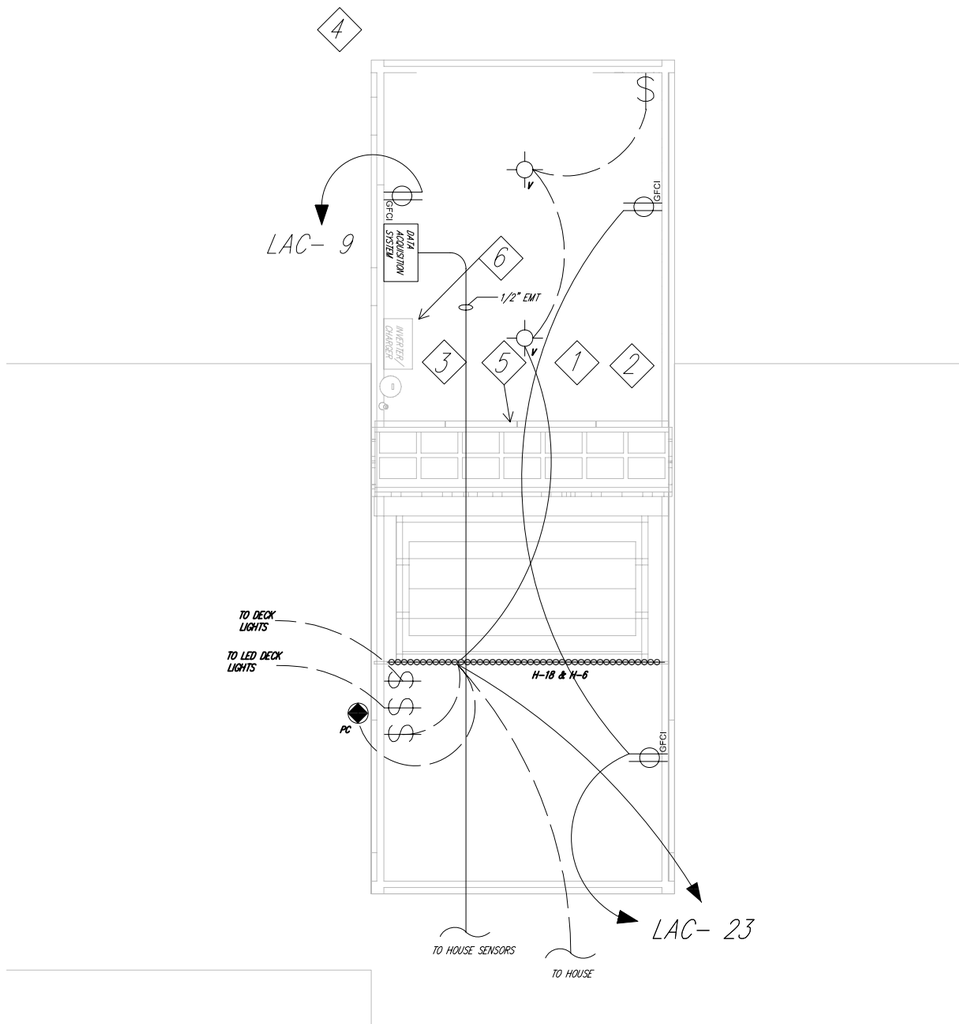

N

1 GARAGE POWER, LIGHTING AND DATA
SCALE: 1' = 1/4"

E1.03 KEYNOTE LEGEND

1	BATTERY RACK TO BE MADE OF CORROSION RESISTANT METAL
2	ALL ELECTRICALLY ENERGIZED PARTS ARE TO HAVE PROPERLY INSULATED COVERINGS
3	BATTERY RACK TO HAVE PROPER WORKING CLEARANCES AS PER NEC 110.26
4	BATTERY STORAGE ENTRANCE IS TO HAVE SIGNAGE DECLARING THAT AUTORIZED PERSONAL ONLY IS ALLOWED
5	EXPLOSION PROOF LIGHT FIXTURES TO BE MOUNTED ABOVE EACH BATTERY SHELF
6	LUGS IN PDP WILL BE LISED FOR USE WITH FINE STRANDED CABLES

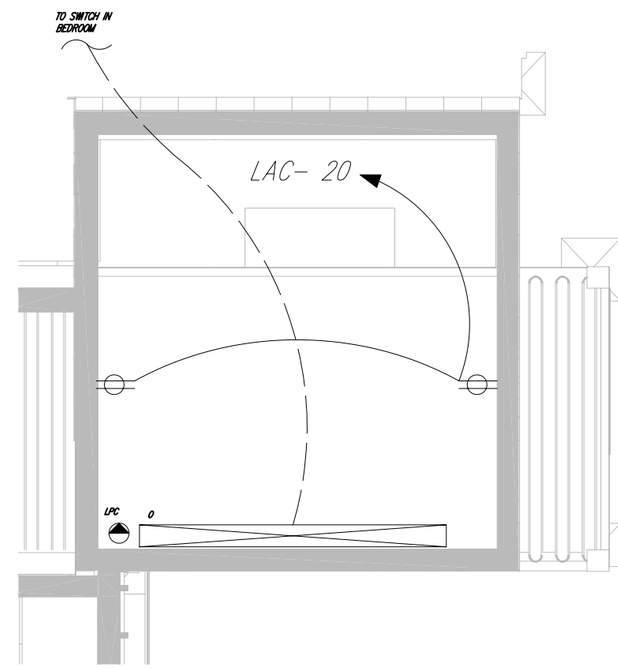

N

2 ATTIC LEVEL POWER AND LIGHTING
SCALE: 1' = 1/4"

Drawn by	Date
J.Baum	August 7, 2007
Revised	Date

2007 Solar Decathlon

University of Colorado at Boulder
Civil, Environmental, and Architectural Engineering
428 UCB, Room ECCE 441
Boulder, CO 80309-0428

Garage/Attic Power/Ligthing Plan

0 1' 2' 4' 8'

E1.03

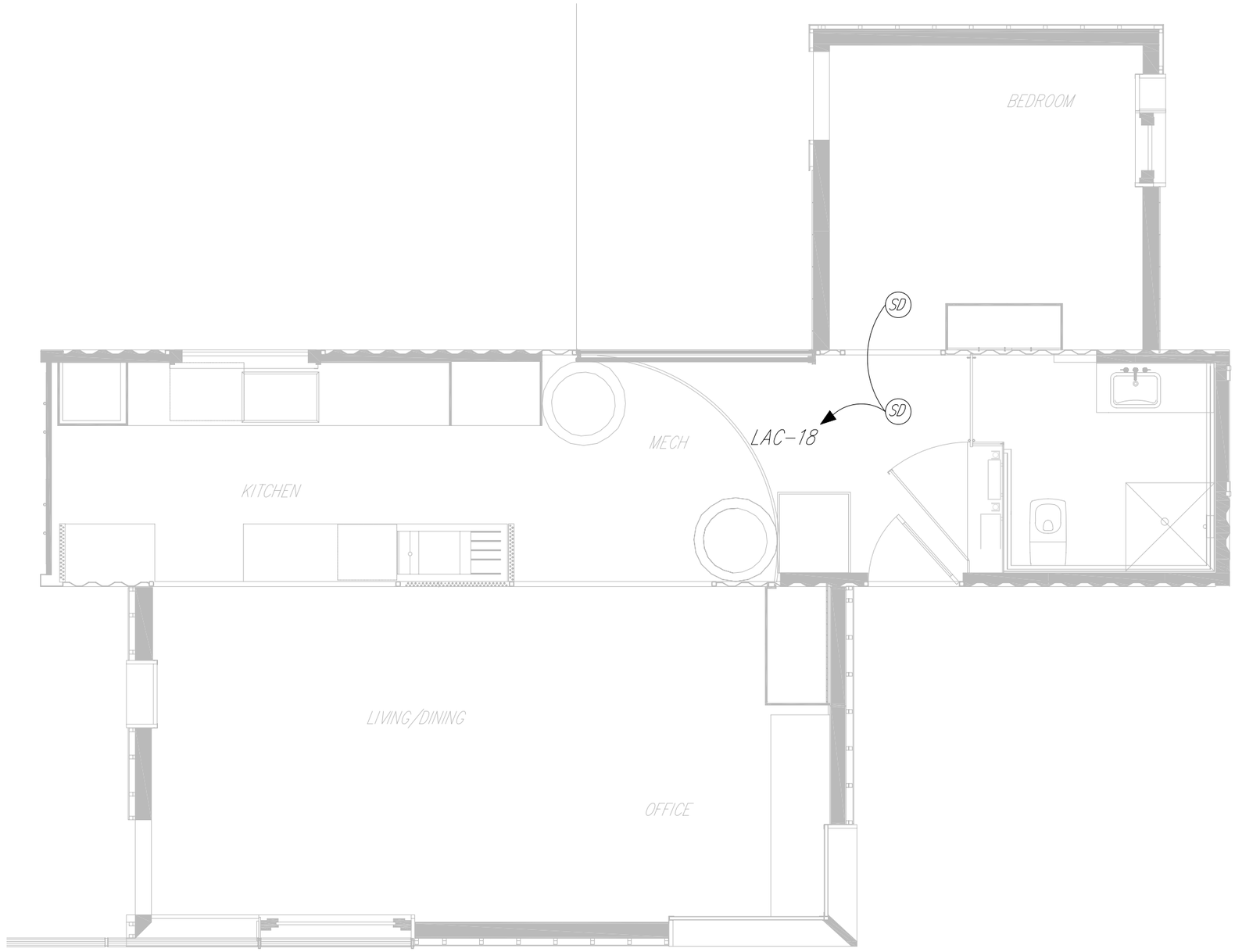

N

1 FIRE SAFETY PLAN
SCALE: 1' = 1/4"

Drawn by	Date
J.Baum	August 7, 2007
Revised	Date

2007 Solar Decathlon

University of Colorado at Boulder
Civil, Environmental, and Architectural Engineering
428 UCB, Room ECCE 441
Boulder, CO 80309-0428

Fire Safety Plan

0 1' 2' 4' 8'

E1.04

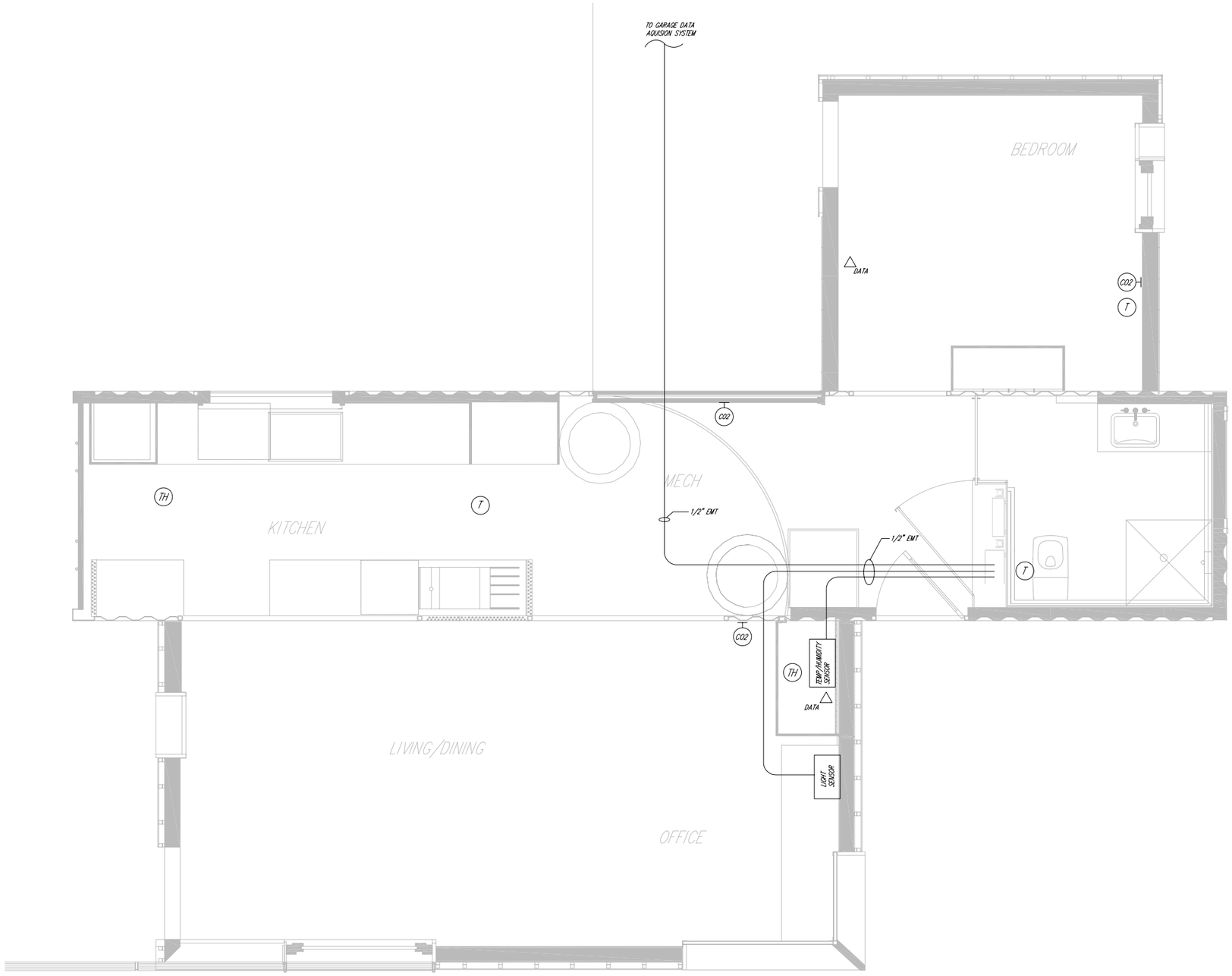

N

1 DATA OUTLET PLAN
SCALE: 1' = 1/4"

Drawn by	Date
J.Baum	August 7, 2007
Revised	Date

2007 Solar Decathlon

University of Colorado at Boulder
Civil, Environmental, and Architectural Engineering
428 UCB, Room ECCE 441
Boulder, CO 80309-0428

Data Outlet Plan

0 1' 2' 4' 8'

E1.05

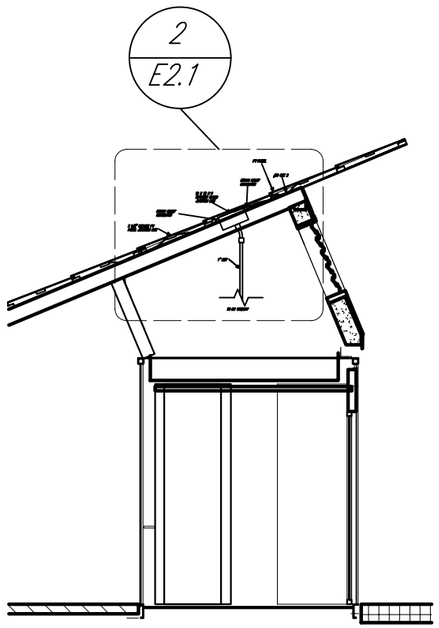

1 PV ROOF SECTION
NTS

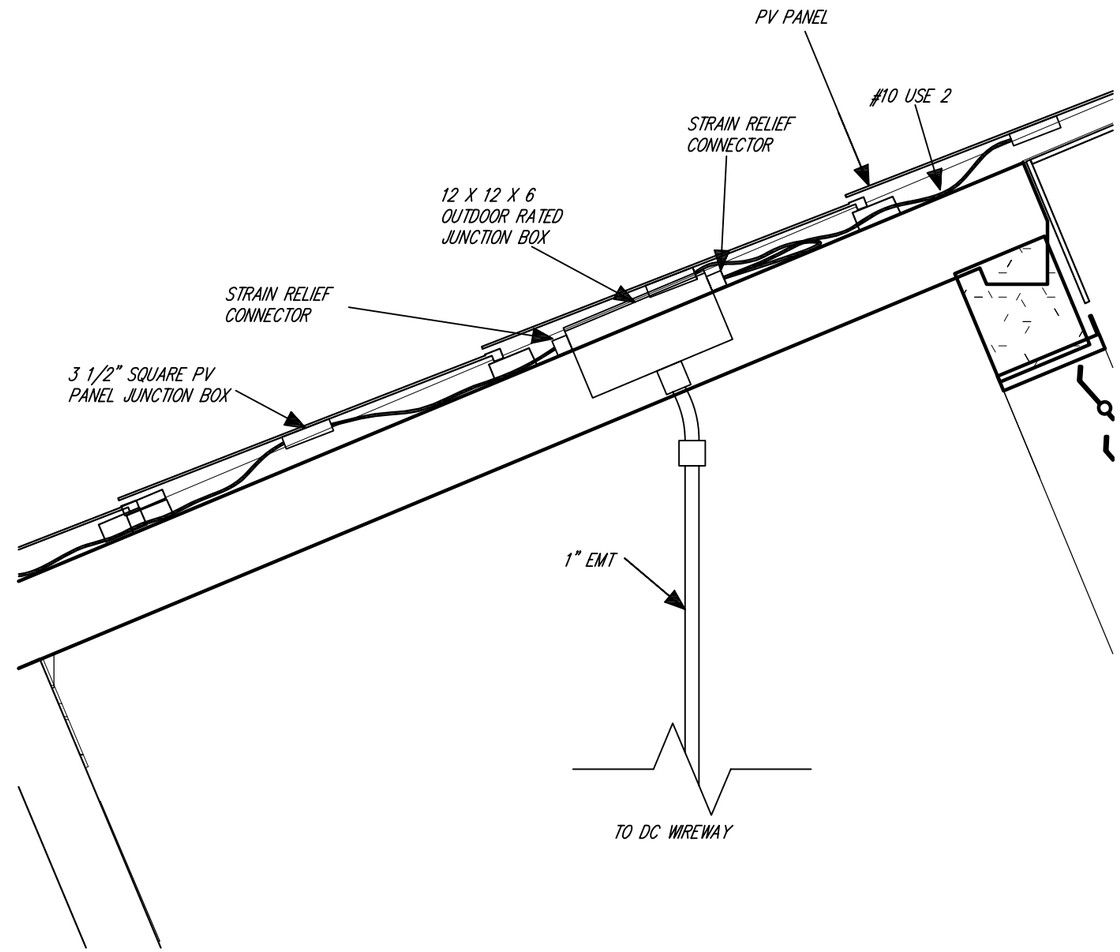

2 PV ROOF PENETRATION DETAIL
SCALE: 1" = 1'

Drawn by	Date
J.Baum	August 7, 2007
Revised	Date

2007 Solar Decathlon

University of Colorado at Boulder
Civil, Environmental, and Architectural Engineering
428 UCB, Room ECCE 441
Boulder, CO 80309-0428

Roof Penatration Section

0 6" 1' 2' 3'

E2.01

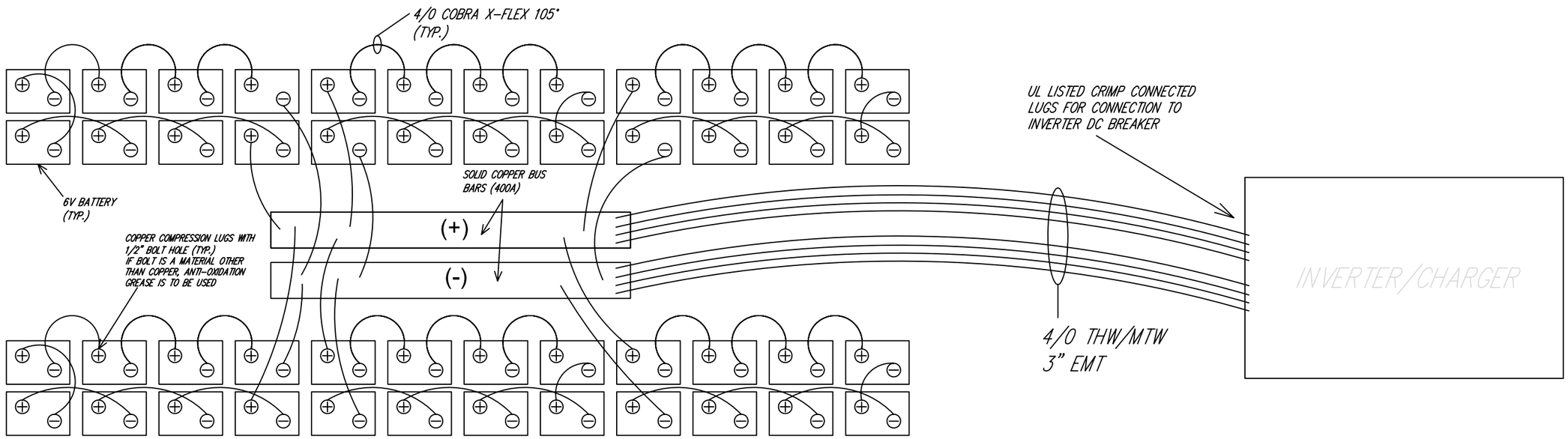

1 BATTERY WIRING DETAIL
NTS

Drawn by
Date
August 7, 2007
Revised
Date
J. Baum

2007 Solar Decathlon

University of Colorado at Boulder
Civil, Environmental, and Architectural Engineering
428 UCB, Room ECCE 441
Boulder, CO 80309-0428

Battery Wiring Detail

0 6" 1' 2' 4'

NTS

E2.02

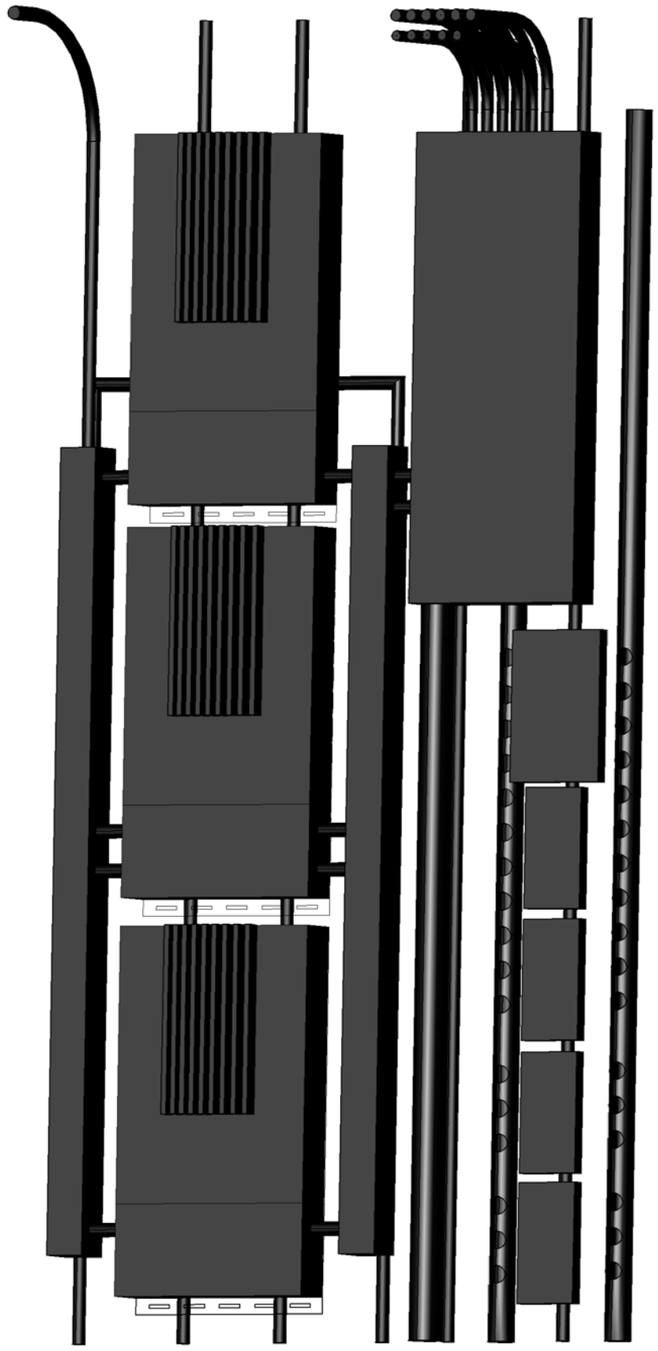

1 FAT WALL 3D
NTS

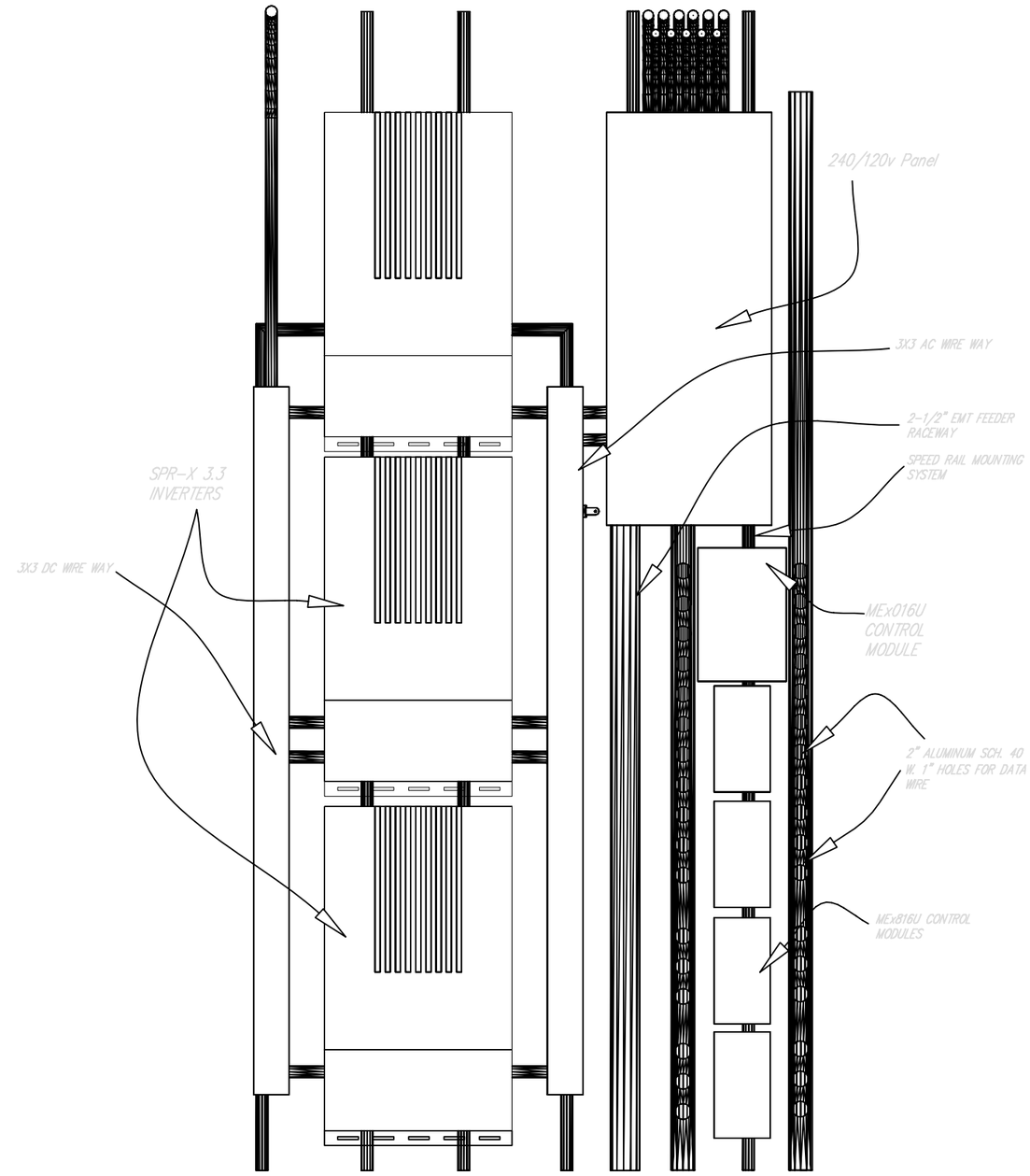

1 FAT WALL COMPONENTS
SCALE: 1" = 1'

Drawn by	Date
J.Baum	August 7, 2007
Revised	Date

2007 Solar Decathlon

University of Colorado at Boulder
Civil, Environmental, and Architectural Engineering
428 UCB, Room ECCE 441
Boulder, CO 80309-0428

Roof Penatration Section

0 6" 1' 2' 3'

E2.03

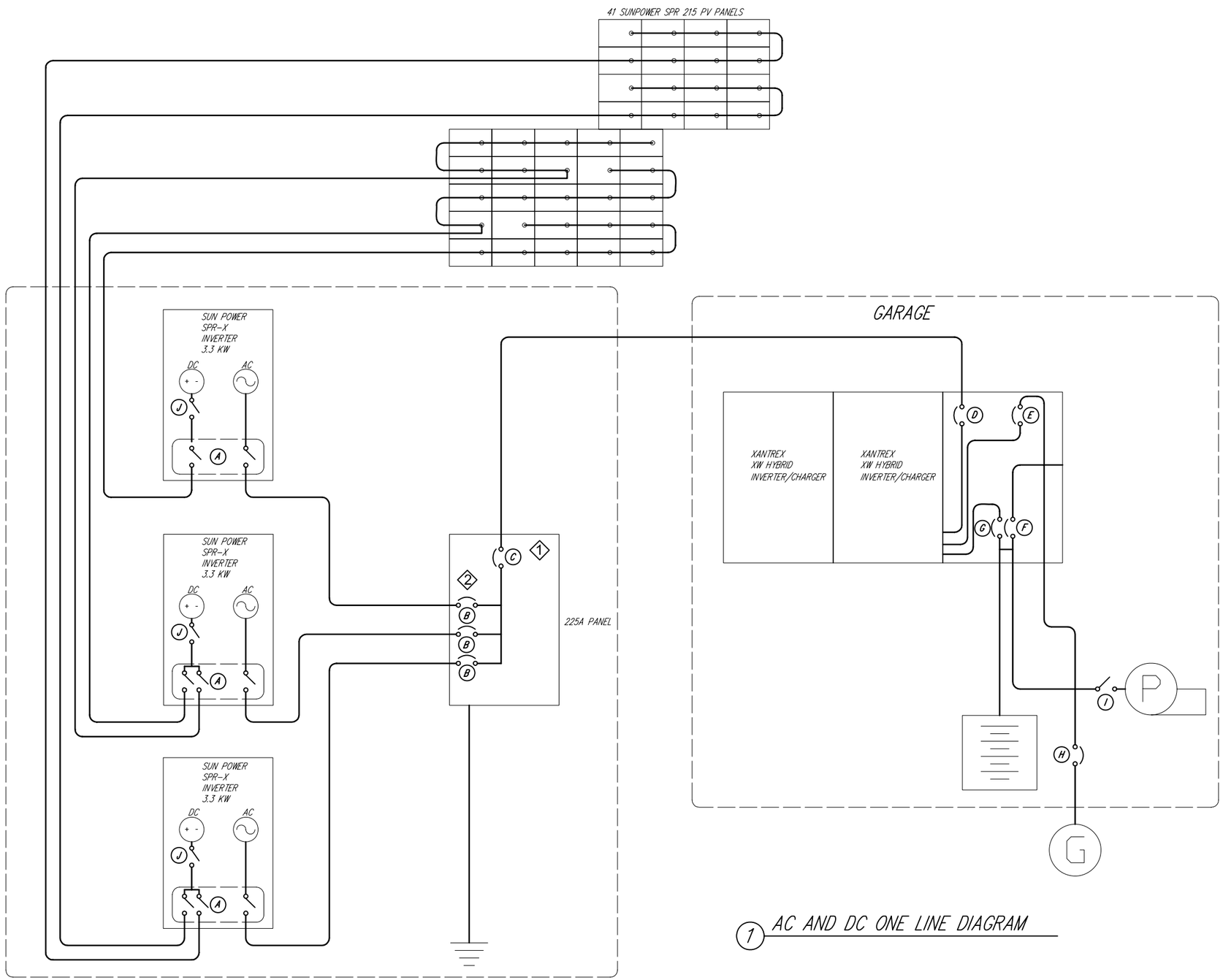

1 AC AND DC ONE LINE DIAGRAM

GENERAL NOTES

PANEL LAC IS TO IS TO BE DURABLY MARKED WITH VOLTAGE AND CURRENT RATING AND THE NUMBER OF PHASES AND THE MANUFACTURERS NAME OR TRADE MARK

ALL DISCONNECTS FOR THE INDIVIDUAL EQUIPMENT AND BATTERIES ARE TO BE MARKED WITH A PERMENANT PLAQUE NEAR THE SPECIFIED EQUIPMENT

KEYNOTE SCHEDULE

1	DISCONNECT IS TO BE MARKED WITH A PERMANENT PLAQUE IN A VISIBLE LOCATION NEAR THE DISCONNECT
2	INVERTER SUPPLY POWER DISCONNECT IS TO BE MARKED WITH A PERMANENT PLAQUE IN A VISIBLE LOCATION NEAR THE DISCONNECT
3	AC AND DC DISCONNECT LOCATED IN INVERTER AS PER 690.14 (C)(1) EXCEPTION AND 690.31(E)

DISCONNECT SCHEDULE

A	20A AC/DC DISCONNECT LOCATED ON INVERTER
B	20A 2-POLE CIRCUIT BREAKER
C	200A 2-POLE MAIN BREAKER
D	200A 2-POLE MAIN BREAKER
E	20A AC GENERATOR BREAKER DISCONNECT
F	AUXILIARY 15A DC BREAKER DISCONNECT
G	BATTERY DC DISCONNECT: 4- 250A BREAKERS
H	20A GENERATOR AC BREAKER DISCONNECT
I	15A PUMP DC DISCONNECT
J	1A GROUND FAULT PROTECTION DEVICE (GFPD)

Drawn by J.Baum
Date August 7, 2007
Revised
Date

2007 Solar Decathlon

University of Colorado at Boulder
Civil, Environmental, and Architectural Engineering
428 UCB, Room ECCE 441
Boulder, CO 80309-0428

Online Diagram

0 6" 1' 2' 4'
NTS

E3.01

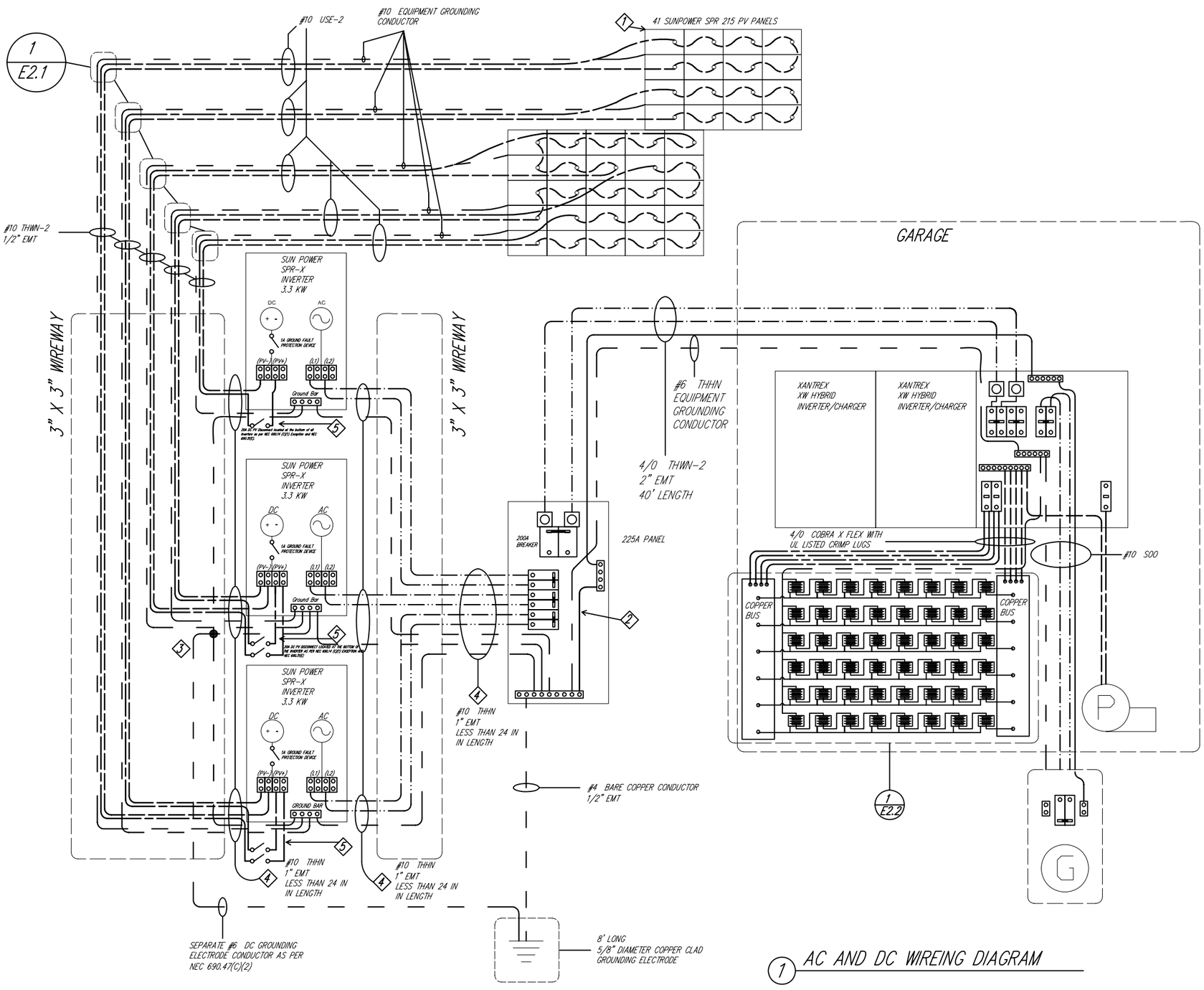

1 AC AND DC WIREING DIAGRAM

KEYNOTE SCHEDULE

1	ALL INDIVIDUAL PIECES OF THE STEEL FRAME WILL BE GROUNDED WITH A #10 COPPER EQUIPMENT GROUNDING CONDUCTOR
2	MAIN BONDING JUMPER BUS.
3	EXOTHERMIC WELD OR IRREVERSABLE SPLICE
4	CONDUIT FILL CALCULATIONS GIVEN ON PAGE E0.2
5	INTERNAL AC AND DC DISCONNECT AS PER NEC 690.31 E (ALSO SEE DISCONNECT SCHEDULE ON E3.1)

WIRE LEGEND

GROUNDING	
GROUNDED (AC NEUTRAL)	
AC HOT L1	
AC HOT L2	
DC POSITIVE	
DC NEGATIVE	
MAIN BONDING JUMPER (BUS)	

SYMBOL LEGEND

	CIRCUIT BREAKER
	TWO POLE CIRCUIT BREAKER
	SPLICE BAR
	SERVICE ENTRANCE CONDUCTOR LUG
	BATTERY
	GROUNDING CONNECTION

Drawn by	Date
J.Baum	August 7, 2007
Revised	Date

2007 Solar Decathlon

University of Colorado at Boulder
Civil, Environmental, and Architectural Engineering
428 UCB, Room ECCE 441
Boulder, CO 80309-0428

Wiring Diagram

0 6" 1' 2' 4'

NTS

E3.02

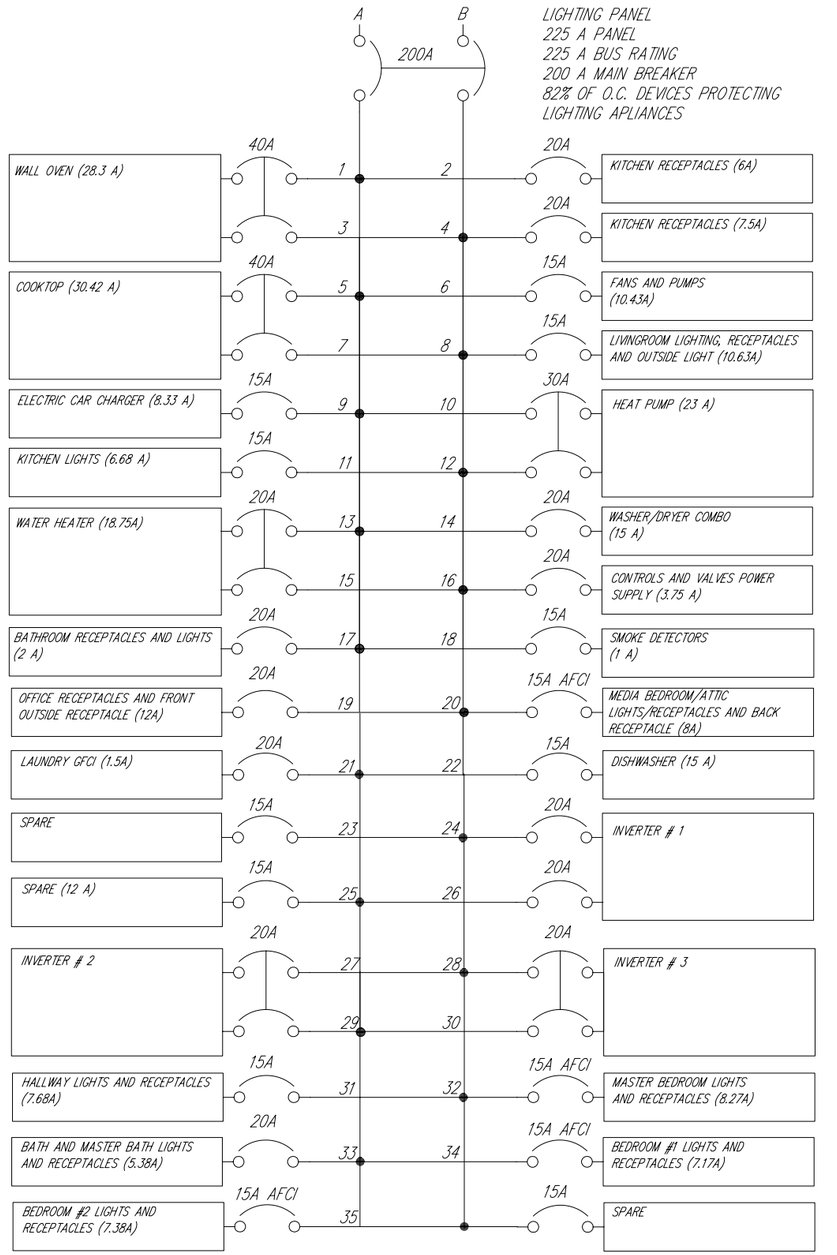

TOTAL LOAD PHASE A: 175.46 A PERCENT IMBALANCE: 8.25% TOTAL LOAD PHASE B: 160.96 A

1 PANEL SCHEDULE

PANEL SCEDULE TO BE LOCATED IN PANEL LAC

1	WALL OVEN (40A)	KITCHEN RECEPTACLES (20A)	2
3		KITCHEN RECEPTACLES (20 A)	4
5	COOKTOP (40A)	FANS AND PUMPS (15A)	6
7		LIVINGROOM LIGHTING, RECEPTACLES AND OUTSIDE LIGHT (20 A)	8
9	ELECTRIC CAR CHARGER (15 A)	HEAT PUMP (30 A)	10
11	KITCHEN LIGHTS (7 A)		12
13	FUTURE WATER HEATER	WASHER/DRYER COMBO (15 A)	14
15		CONTROLS AND VALVES POWER SUPPLY (15A)	16
17	BATHROOM RECEPTACLES AND LIGHTS (15A)	SMOKE DETECTORS (15 A)	18
19	OFFICE RECEPTACLES AND FRONT OUTSIDE RECEPTACLE (20A)	BEDROOM/ATTIC LIGHTS/RECEPTACLES AND BACK RECEPTACLE (20A)	20
21	LAUNDRY GFCI (15A)	DISHWASHER (15 A)	22
23	GARAGE LIGHTS AND RECEPTACLES (15A)	INVERTER # 1	24
25	SPARE (15A)		26
27	INVERTER # 2	INVERTER # 3	28
29			30
31	HALLWAY LIGHTS AND RECEPTACLES (15A)	MASTER BEDROOM LIGHTS AND RECEPTACLES (15A)	32
33	BATH AND MASTER BATH LIGHTS AND RECEPTACLES (15A)	BEDROOM #1 LIGHTS AND RECEPTACLES (15A)	34
35	BEDROOM #2 LIGHTS AND RECEPTACLES (15A)	SPARE	34

2 PANEL DIRECTORY

Drawn by	Date
J.Baum	August 7, 2007
Revised	Date

Full House Panel Schedule/Label

2007 Solar Decathlon

University of Colorado at Boulder
Civil, Environmental, and Architectural Engineering
428 UCB, Room ECCE 441
Boulder, CO 80309-0428

0 6" 1' 2' 4'
NTS

E4.01

BRANCH CIRCUITS - FULL HOUSE

CIRCUIT #	LOCATION	DESCRIPTION	PT (VA)	VOLTS (V)	I (AMPS)	CB SIZE (A)	RECEPTACLE TYPE	# POLES	CONDUCTOR (THW, Cu)		LOAD CONTRIBUTION (A)	
									PHASE	AWG	A	B
1,3	Kitchen	Wall oven	6792	240	28.30	40		2	A,B	#8	28.30	28.30
2	Kitchen	Kitchen receptacles (set 1), fridge and shipping cont. outiside lights	720	120	6.00	20	GFCI	1	A	#14	6.00	
4	Kitchen	Kitchen receptacles (set 2) and breakfast light	550	120	4.58	20	GFCI, DUPLEX	1	B	#14		4.58
5,7	Kitchen	Cooktop and kitchen fan	7300	240	30.42	40		2	A,B	#8	30.42	30.42
6	Mechanical Area	Fans and pumps	1252	120	10.43	15		1	A	#12	10.43	
8	Living Room	Livingroom lights, receptacles, windows and living room outside light	1510	120	12.58	20	DUPLEX	1	B	#14		12.58
9	Garage	Electric car charger receptacle	1000	120	8.33	15	GFCI	1	A	#14	8.33	
10,12	Mechanical Area	Heat pump	5520	240	23.00	30		2	A,B	#12	23.00	23.00
11	Kitchen / outside	Kitchen, tanks and outside lights	787	120	6.56	15	GFCI	1	B	#12		6.56
13,15	Mechanical Area	Water heater	4500	240	18.75	30		2	A,B	#8	18.75	18.75
14	Kitchen	Washer / Dryer combo	1800	120	15.00	20	DUPLEX	1	A	#10	15.00	
16	Fatwall	Controls and valvs power supply	450	120	3.75	21	DUPLEX	2	B	#11		
17	Entrance bath room	Entrance bathroom lights and receptacles	274	120	2.28	15	GFCI	1	A	#14	2.28	
18	Mechanical Area	Smoke detectors	120	120	1.00	15		1	A	#14	1.00	
19	Living Room	Office receptacles and clearstory window motors	1400	120	11.67	15	DUPLEX	1	B	#14		11.67
20	Entrance bed room	Bedroom lights and receptacles and outside light	558	120	4.65	15	DUPLEX	1	B	#12		4.65
21	Kitchen	Laundry GFCI	180	120	1.50	15	GFCI	1	A	#14	1.50	
22	Kitchen	Dishwasher	1800	120	15.00	20	DUPLEX	1	A	#12	15.00	
23	Garage	Spare	0	0	0.00				B	#10		0.00
24,26	Fatwall	Inverter #1	0	0	0.00	20		1	A,B	#10	0.00	0.00
25	Fatwall	Spare	0	0	0.00	20		2	A,B	#12		
27,29	Fatwall	Inverter #2	0	0	0.00	20		2	A,B	#12	0	0
28,30	Fatwall	Inverter #3	0	0	0.00	20		2	A,B	#12	0	0
31	Hallway	Hallway lights and receptacles	922	120	7.68	15	DUPLEX	1	B	#14		7.68
32	Master bedroom	Master bedroom and closet lights and receptacles	992	120	8.27	15	DUPLEX	1	A	#14	8.27	
33	Bath and master bath	Bath and master bath lights and receptacles	646	120	5.38	15	GFCI	1	A	#14		5.38
34	Bed room #1	Bed room #1	860	120	7.17	15	DUPLEX	1	B	#14	7.17	
35	Bed room #2	Bed room #2	886	120	7.38	15	DUPLEX	1	B	#14		7.38
TOTALS			40819		239.69						175.45	160.96

NOTES:

2. LAUNDRY AND BATHROOM HAVE DESIGNATED CIRCUITS FOR GFCI RECEPTACLES

1 Branch Circuit Schedule

Drawn by J.Baum
Date August 7, 2007
Revised
Date

2007 Solar Decathlon

University of Colorado at Boulder
Civil, Environmental, and Architectural Engineering
428 UCB, Room ECCE 441
Boulder, CO 80309-0428

Branch Circuit Schedule

0 6" 1' 2' 4'
NTS

E4.02

Appliance	Amp	Voltage	VA
Range	30.00	240	7200
Wall Oven	6.25	120	1500
Dishwasher	6.96	120	1670
Washing / Dryer	5.42	120	1300
Refrigerator	0.22	120	52

Sizing of the Service-entrance Conductors Using the Standard Method

A. Design of Conductors for Phases		NEC Section	
General Loads			
Lighting Load and Receptacles Outlets			
2,100 square feet			
11003.2 VA	2,100 *3VA= 6,300	220.42	
Small Appliance Receptacles			
3,000 VA		210.11 (C)(1)	
Laundry Receptacle			
1,500 VA		210.11 (C)(11)	
		220.82 (B)(2)	
Total General Load =	15,503 VA		Total general lighting load is the general lighting load + small appliance loads
Demand Load =	**7,376 VA**	220.42	Demand load is 100% x the first 3000 VA + 35% x the remaining VA
Fixed Appliance Load			
Dishwasher, Washing Machine			
Demand Load =	**3,353 VA**	220.53	(Sum of VA's)*0.75
Special Appliances			
Dryer	1,300 VA	220.54	
Range	5,760 VA	220.55	Range is 0.8 x Rated VA
DL =	**7,060 VA**		
Total Demand Load =	17,789 VA		Sum of the demand loads
I_{Load} =	**74.1 A**		Total demand load / 240V
Size of THW (Cu) Conductor According to Table 310.15(B)(6) For a 200 amp Panel according to future expansion plans			
4/0			
Size of Main Breaker			
200 A, 2P			

1 CONDUCTOR SIZING CALCULATIONS

B. Design of Conductors for Neutral			
General Loads			
Demand Load =	**7,376**	**VA**	
Fixed Appliance Load			
Demand Load =	**3,353**	**VA**	
Special Appliances			Apply a Demand Factor of 0.7 to Dryers and Ranges
Dryer	910 VA		
Range	4,032 VA		
DL =	**4,942 VA**		
Total Demand Load =	15,671 VA		
I_{Load} =	**65.3 A**		Total demand load [VA] / 240 [V]
Size of THW (Cu) Conductor for Neutral As per NEC 310.16			
#2			
Size of Grounding Electrode Conductor As per NEC Table 250.66			
#2			
Size of Equipment Grounding Conductors As per NEC Table 250.122			
#6			

2 NEUTRAL CONDUCTOR SIZING CALCULATIONS

D. Conduit Fill Calculations						
Location	**Insulation**	**Size**	**Area [in^2]**	**Quantity**	**Total Area**	**NEC Section**
1) PDP to Panelboard	THW	4/0	0.3718	3	1.1154	350 Tables 4 and 5
	THW	#6	0.0726	1	0.0726	
	Total				1.188	
	Conduit	**Size**	**40% of Area**			
	LFNC-B	2"	1.298			
2) DC Wireway to Inverters	**Insulation**	**Size**	**Number of conductors**			
	THHN	#10	5			Annex C Table C.1
	Conduit	**Size**	**Maximum number of conductors**			
	EMT	1"	16			
3) Inverters to AC WireWay	**Insulation**	**Size**	**Number of conductors**			Annex C Table C.1
	THHN	#12	3			
	Conduit	**Size**	**Maximum number of conductors**			
	EMT	1"	26			
4) AC Wireway to Panelboard	**Insulation**	**Size**	**Number of conductors**			Annex C Table C.1
	THHN	#12	9			
	Conduit	**Size**	**Maximum number of conductors**			
	EMT	1"	26			

3 CONDUIT FILL CALCULATIONS

Drawn by J.Baum | Date August 7, 2007 | Revised | Date

2007 Solar Decathlon

University of Colorado at Boulder
Civil, Environmental, and Architectural Engineering
428 UCB, Room ECCE 441
Boulder, CO 80309-0428

AC Calculations

0 6" 1' 2' 4'

NTS

E4.03

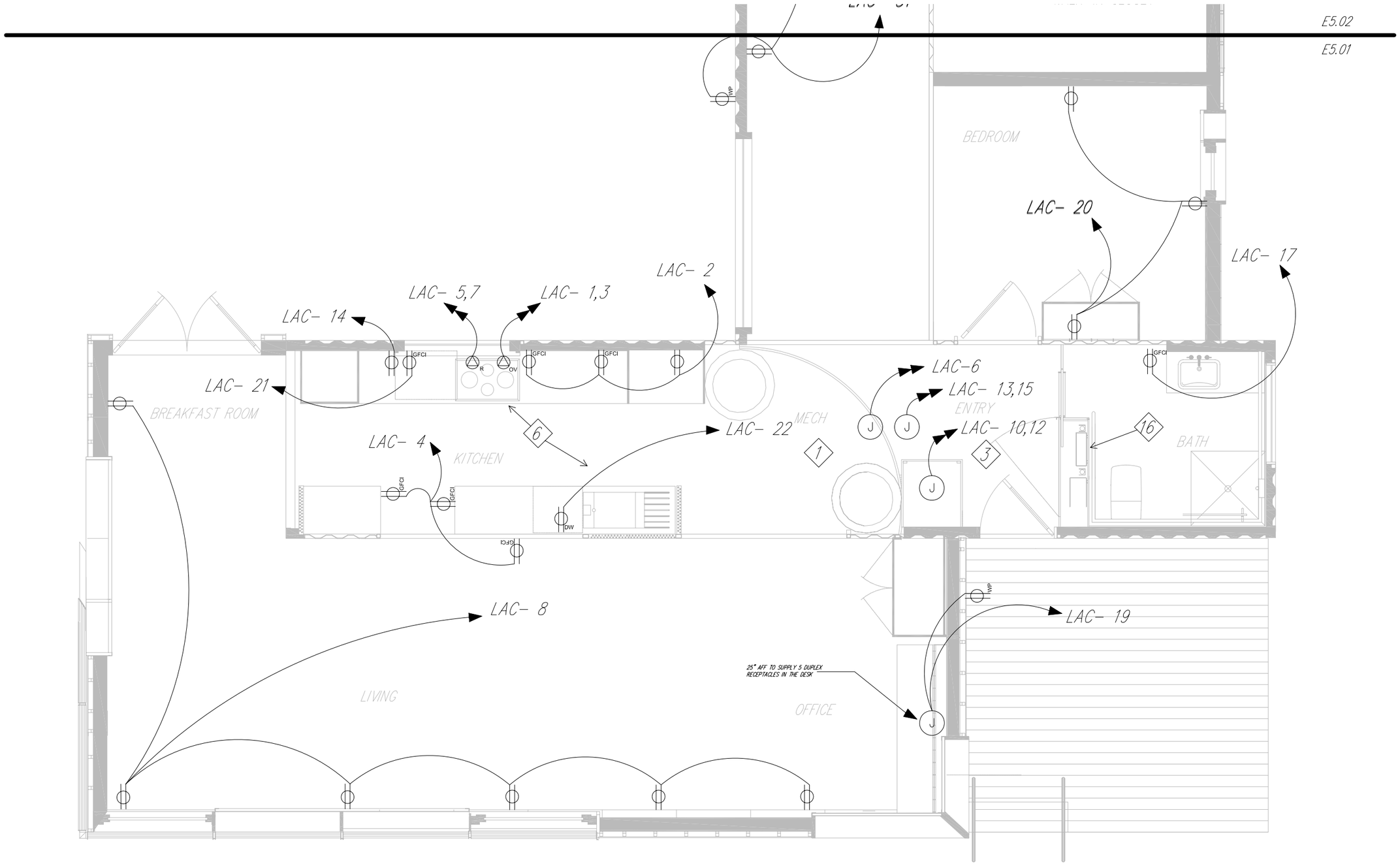

N

1 SOUTH FULL HOUSE POWER PLAN
SCALE: 1/4" = 1'

Drawn by	Date
J.Baum	August 7, 2007
Revised	Date

South Full House Power Plan

2007 Solar Decathlon

University of Colorado at Boulder
Civil, Environmental, and Architectural Engineering
428 UCB, Room ECCE 441
Boulder, CO 80309-0428

0 1' 2' 4' 8'

E5.01

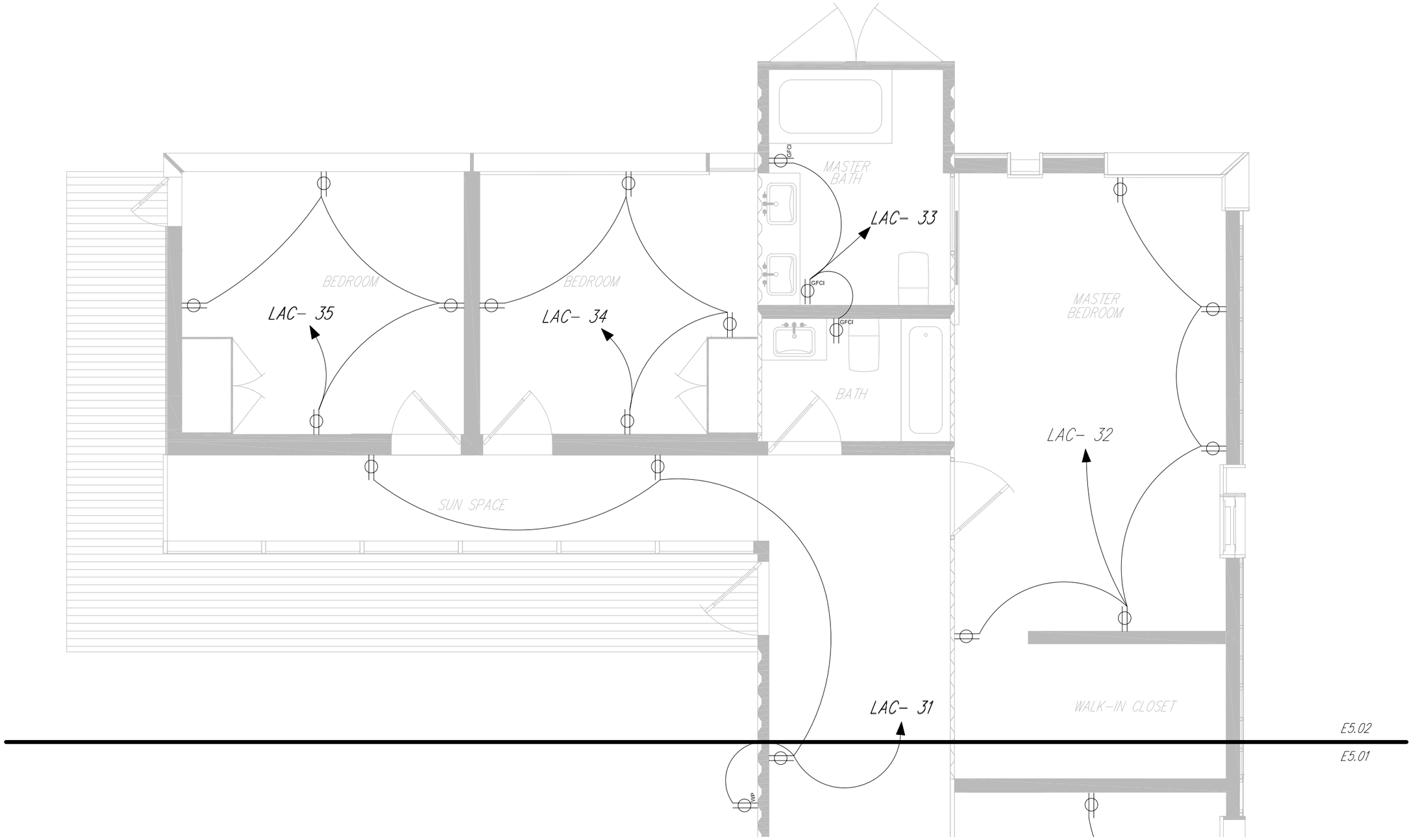

N

1 NORTH FULL HOUSE POWER PLAN
SCALE: 1/4" = 1'

Drawn by	Date
J.Baum	August 7, 2007
Revised	Date

2007 Solar Decathlon

University of Colorado at Boulder
Civil, Environmental, and Architectural Engineering
428 UCB, Room ECCE 441
Boulder, CO 80309-0428

North Full House Power Plan

0 1' 2' 4' 8'

E5.02

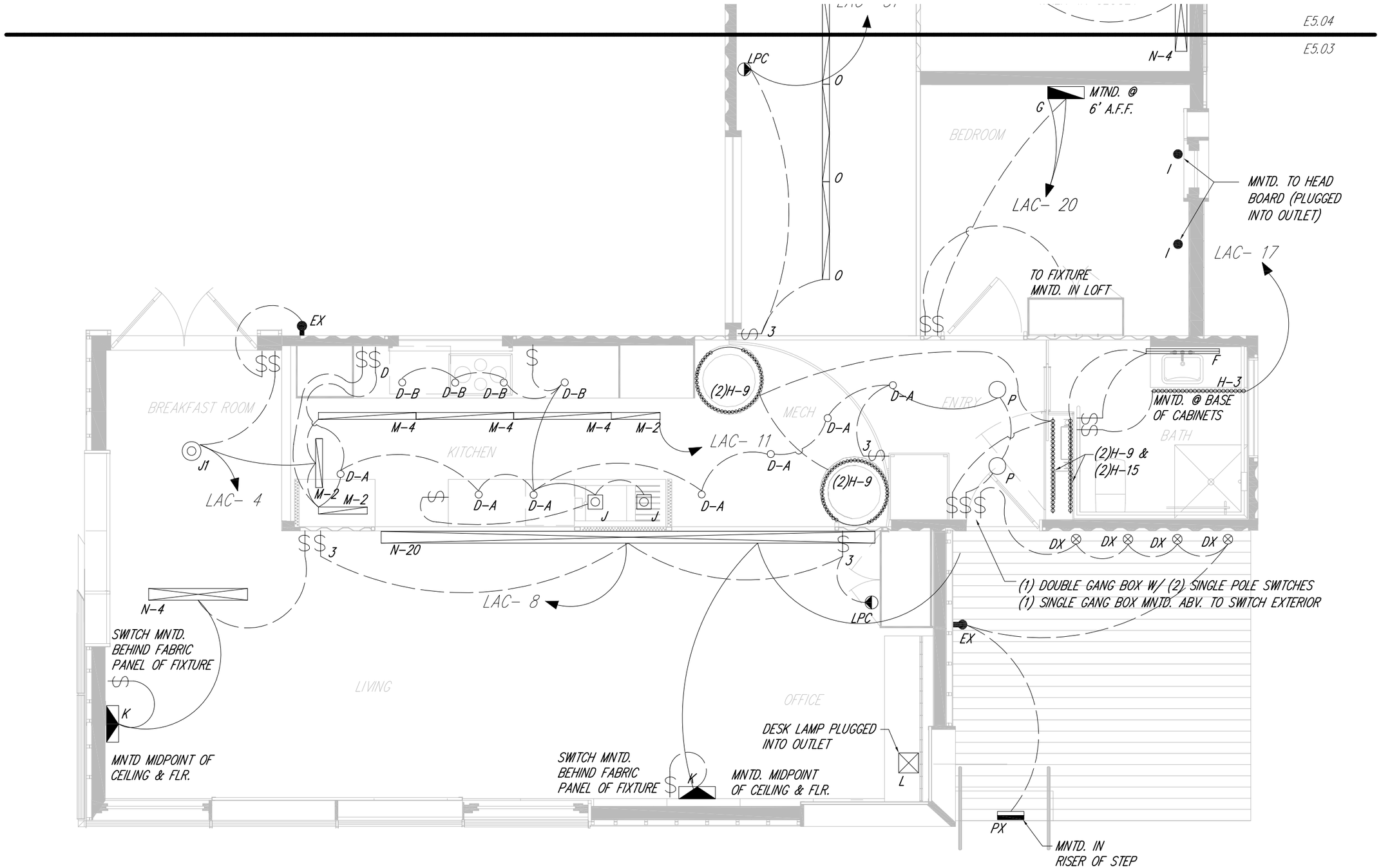

1 SOUTH FULL HOUSE LIGHTING PLAN
SCALE: 1/4" = 1'

Drawn by	Date
J.Baum	August 7, 2007
Revised	Date

2007 Solar Decathlon

University of Colorado at Boulder
Civil, Environmental, and Architectural Engineering
428 UCB, Room ECCE 441
Boulder, CO 80309-0428

South Full House Lighting Plan

0 1' 2' 4' 8'

E5.03

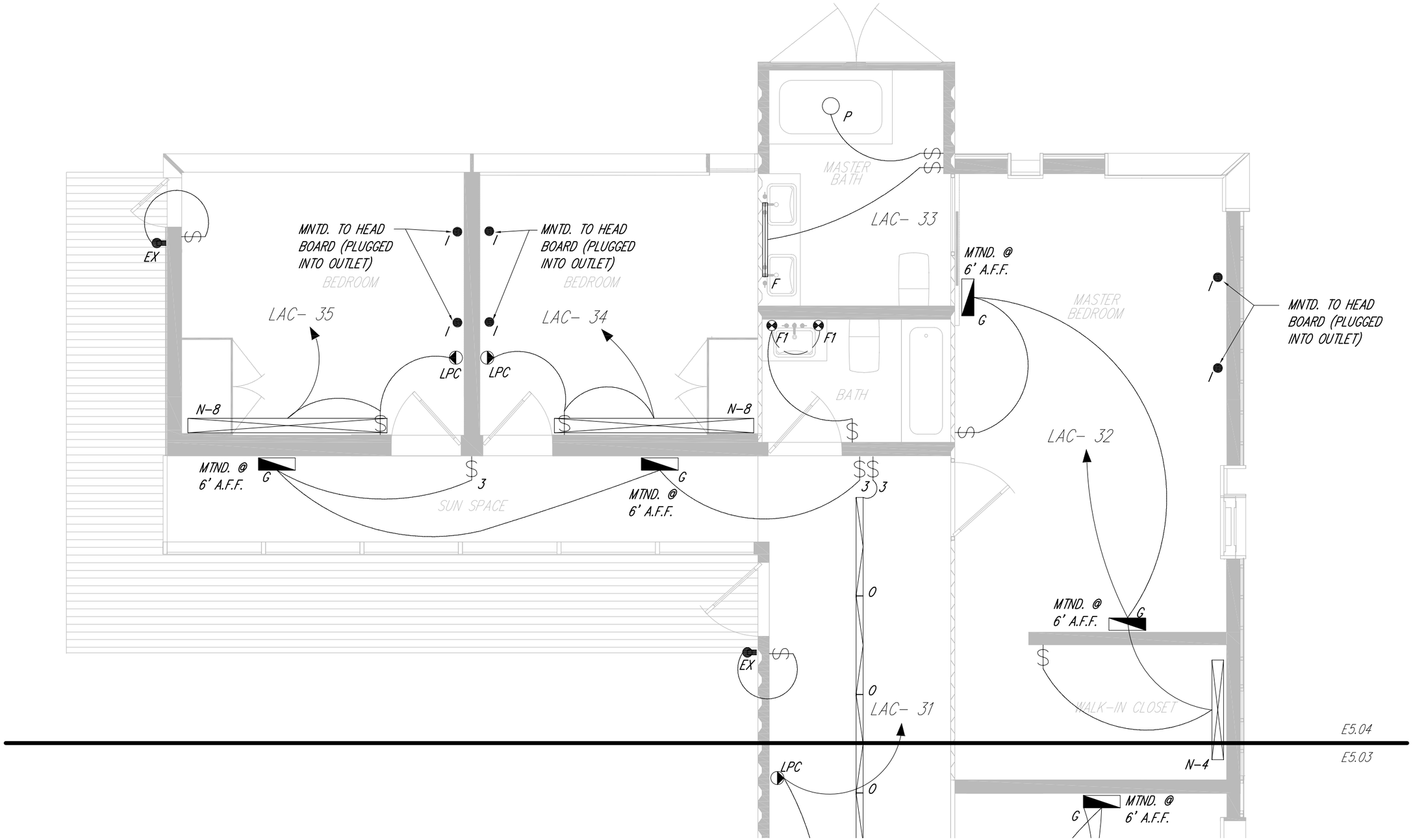

N

1 NORTH FULL HOUSE LIGHTING PLAN
SCALE: 1/4" = 1'

Drawn by	Date
J.Baum	August 7, 2007
Revised	Date

2007 Solar Decathlon

University of Colorado at Boulder
Civil, Environmental, and Architectural Engineering
428 UCB, Room ECCE 441
Boulder, CO 80309-0428

North Full House Lighting Plan

0 1' 2' 4' 8'

E5.04

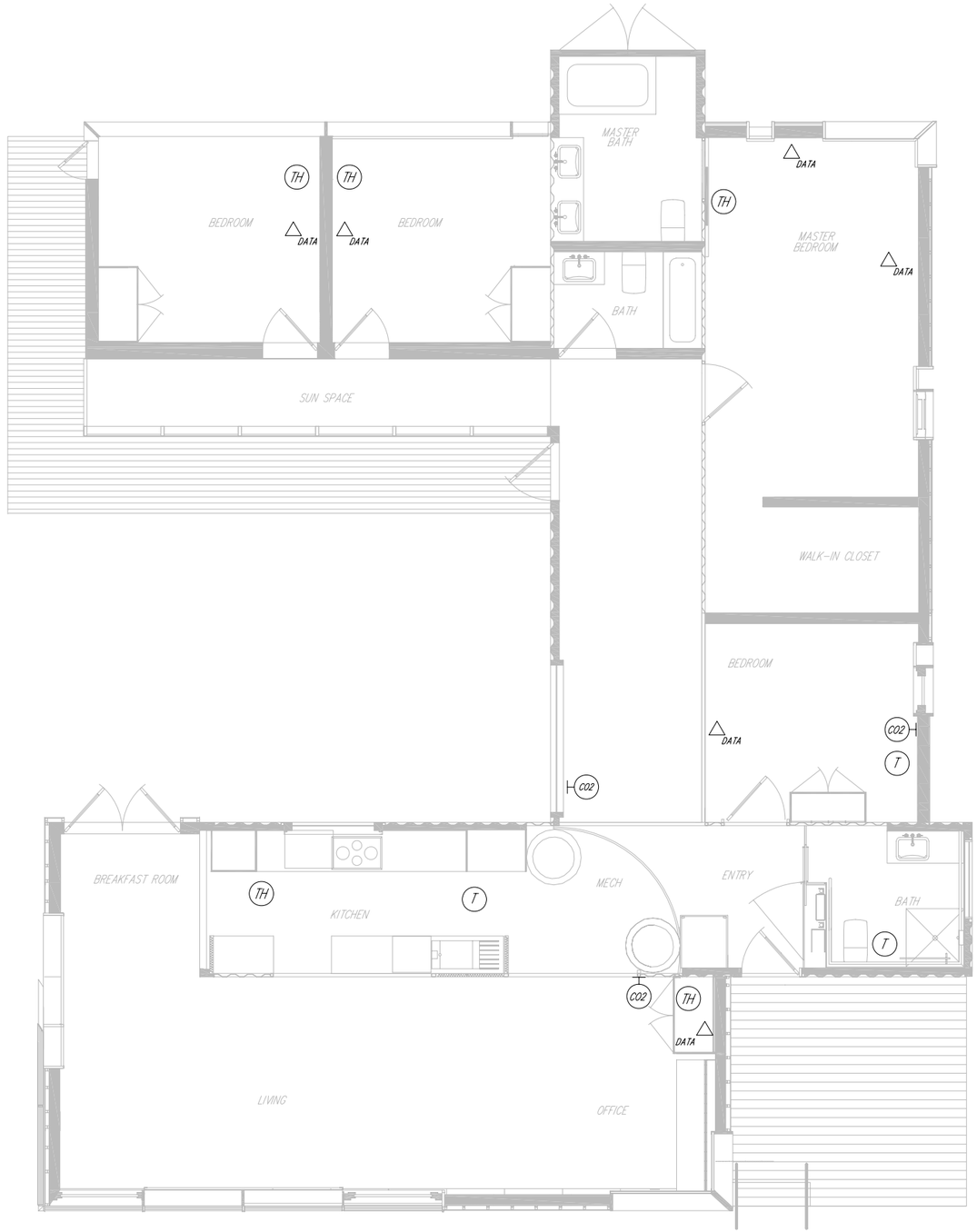

N

1 FULL HOUSE DATA PLAN
NTS'

Drawn by	Date
J.Baum	August 7, 2007
Revised	Date

2007 Solar Decathlon

University of Colorado at Boulder
Civil, Environmental, and Architectural Engineering
428 UCB, Room ECCE 441
Boulder, CO 80309-0428

Full House Data Plan

0 6" 1' 2' 4'

NTS

E5.05

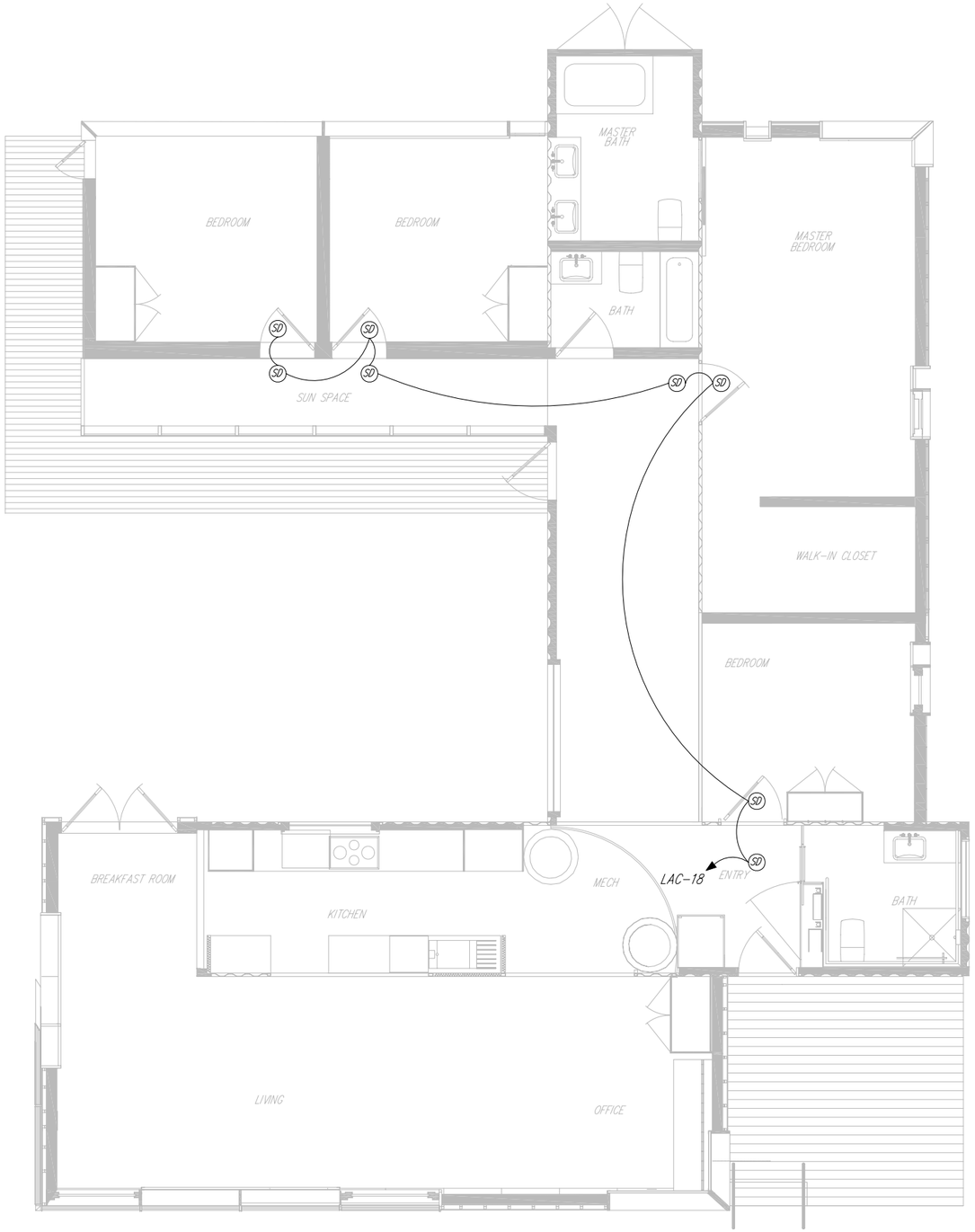

N

1 FULL HOUSE FIRE SAFETY PLAN
NTS

Drawn by	Date
J.Baum	August 7, 2007
Revised	Date

2007 Solar Decathlon

University of Colorado at Boulder
Civil, Environmental, and Architectural Engineering
428 UCB, Room ECCE 441
Boulder, CO 80309-0428

Full House Fire Safety Plan

0 6" 1' 2' 4'

NTS

E5.06

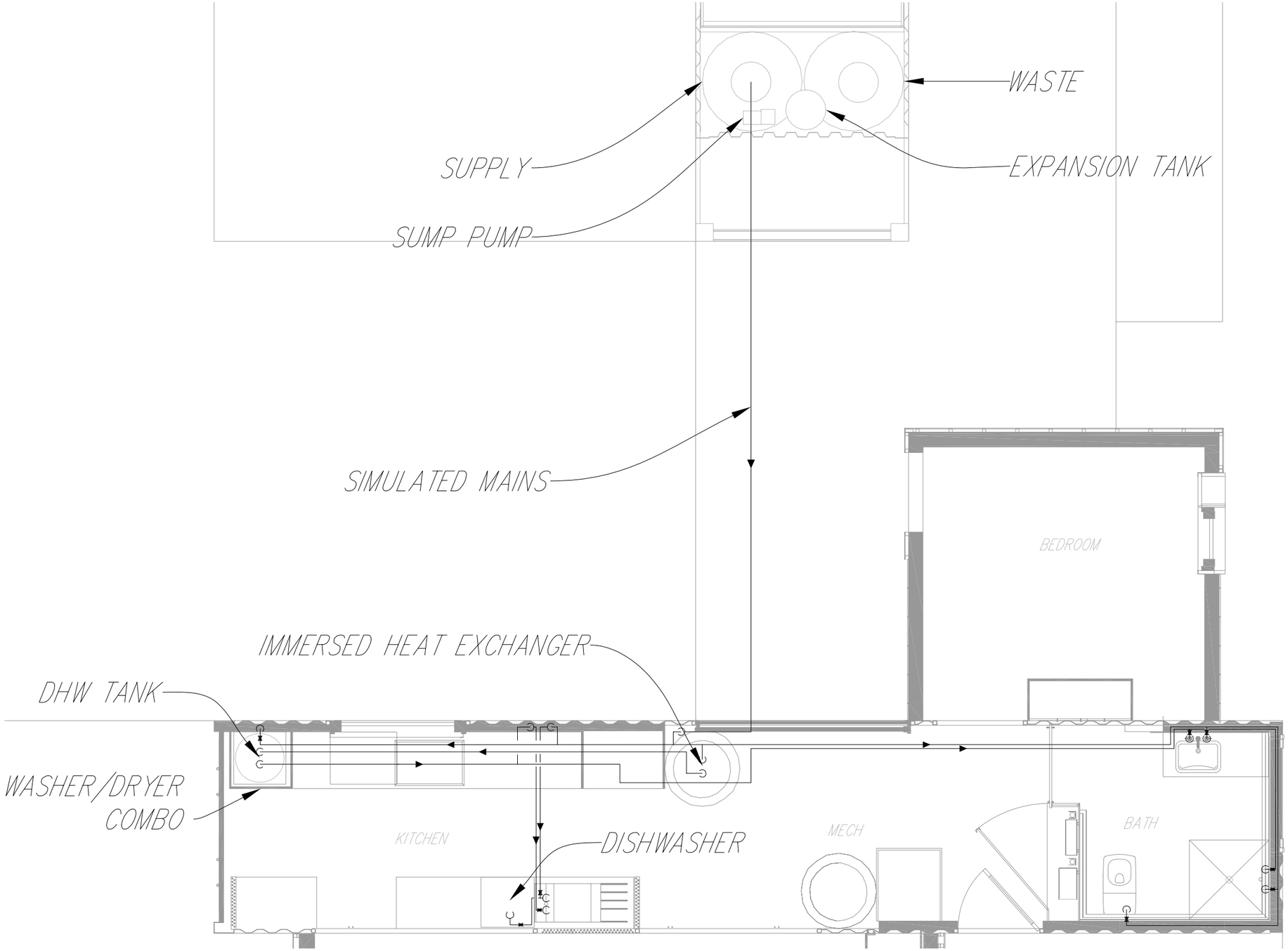

1 GROUND LEVEL PLUMBING SUPPLY PLAN
1/4" – 1'-0"

LEGEND

⧗	WATER HAMMER ARRESTOR

Drawn by	Date
C.Corbin	August 7, 2007
Revised	Date

Ground Level Plumbing Supply Plan

2007 Solar Decathlon

University of Colorado at Boulder
Civil, Environmental, and Architectural Engineering
428 UCB, Room ECCE 441
Boulder, CO 80309-0428

0 1' 2' 4' 8'

P1.01

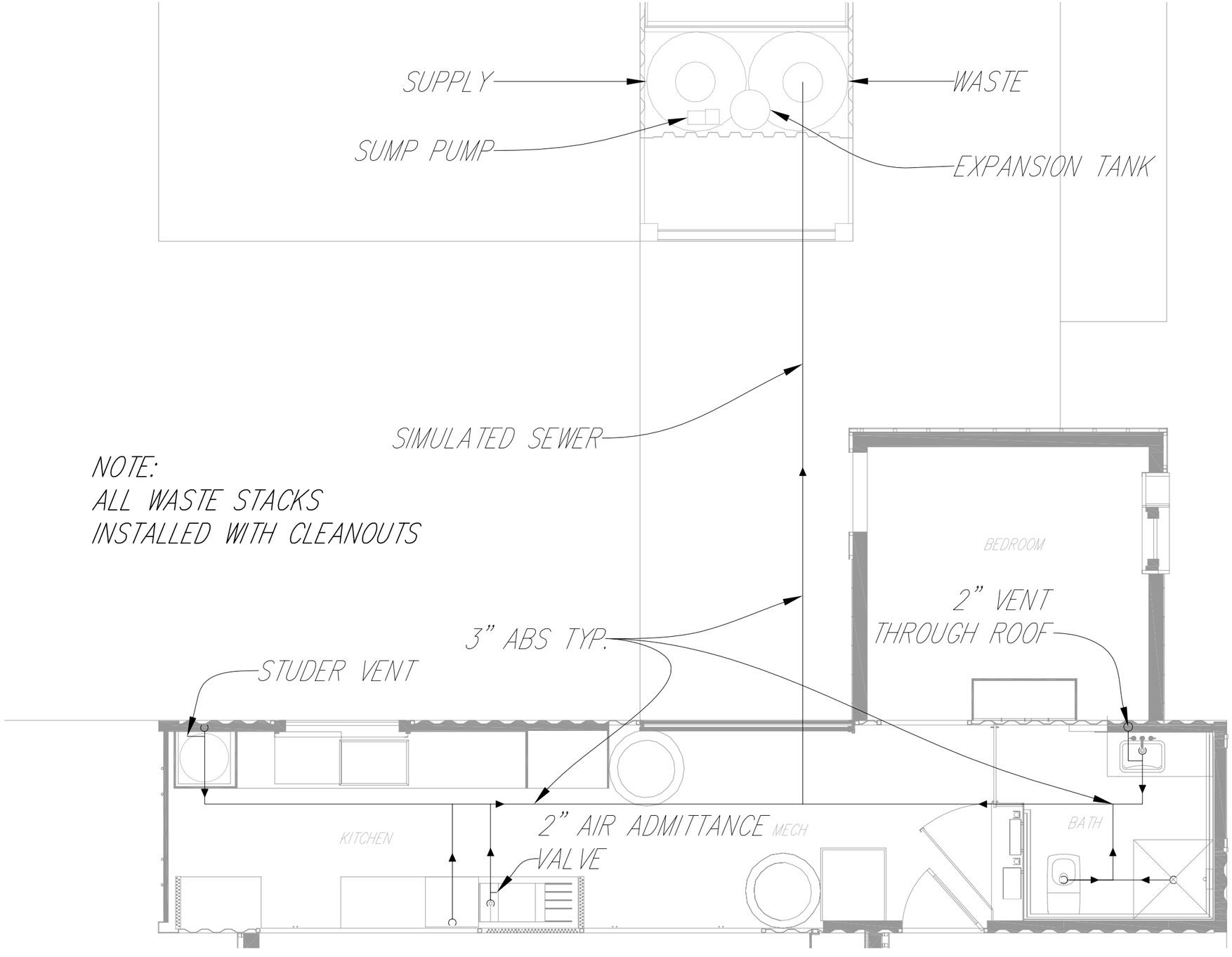

1 GROUND LEVEL PLUMBING DWV PLAN
1/4" – 1'-0"

Drawn by	Date
C.Corbin	August 7, 2007
Revised	Date

2007 Solar Decathlon

Ground Level Plumbing DWV Plan

University of Colorado at Boulder
Civil, Environmental, and Architectural Engineering
428 UCB, Room ECCE 441
Boulder, CO 80309-0428

0 1' 2' 4' 8'

P1.11

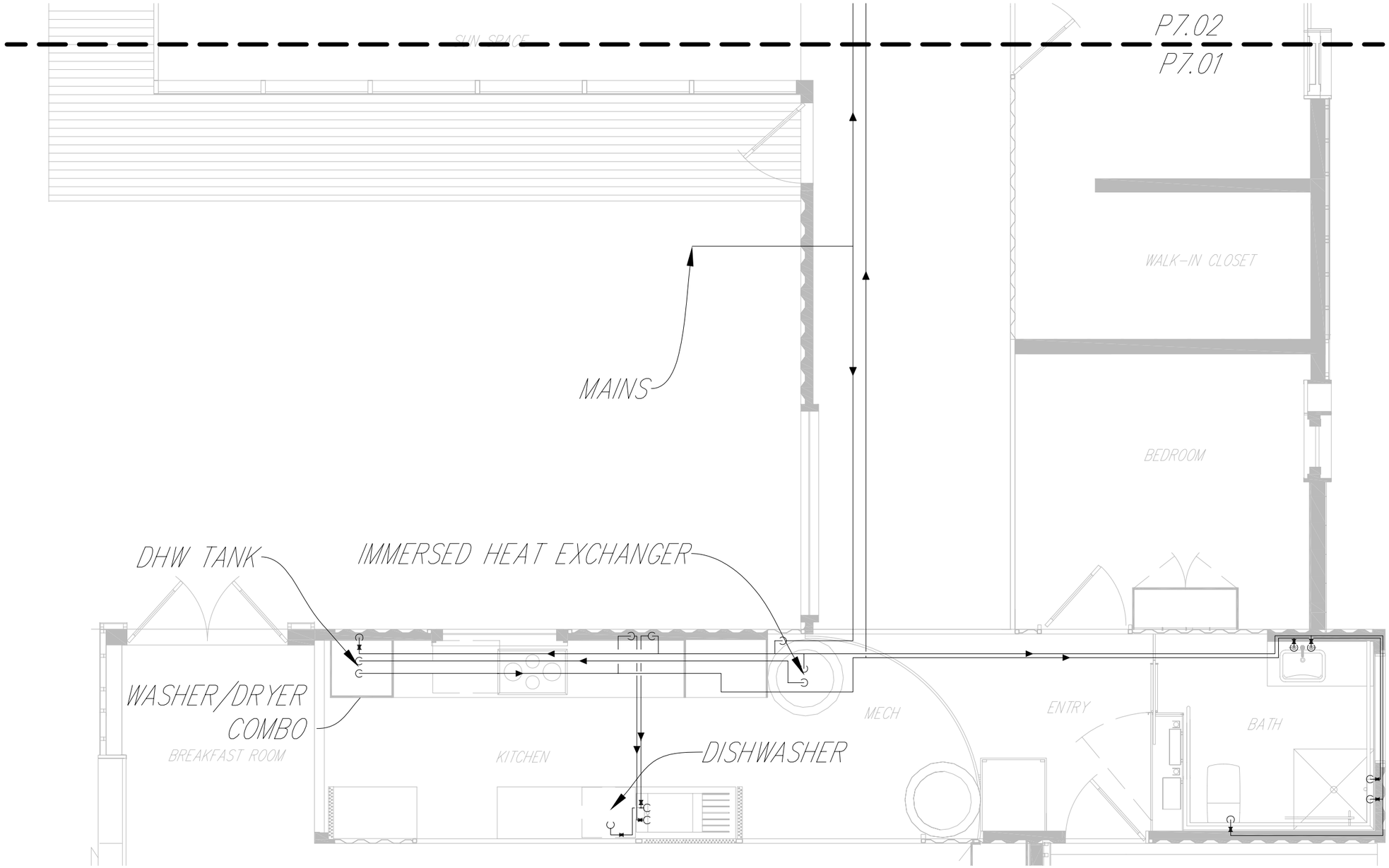

1 COMPLETE HOUSE PLUMBING SUPPLY PLAN
1/4" – 1'-0"

LEGEND

⧗	WATER HAMMER ARRESTOR

Drawn by	Date
C.Corbin	August 7, 2007
Revised	Date

2007 Solar Decathlon

University of Colorado at Boulder
Civil, Environmental, and Architectural Engineering
428 UCB, Room ECCE 441
Boulder, CO 80309-0428

Complete House Plumbing Supply Plan

0 1' 2' 4' 8'

P7.01

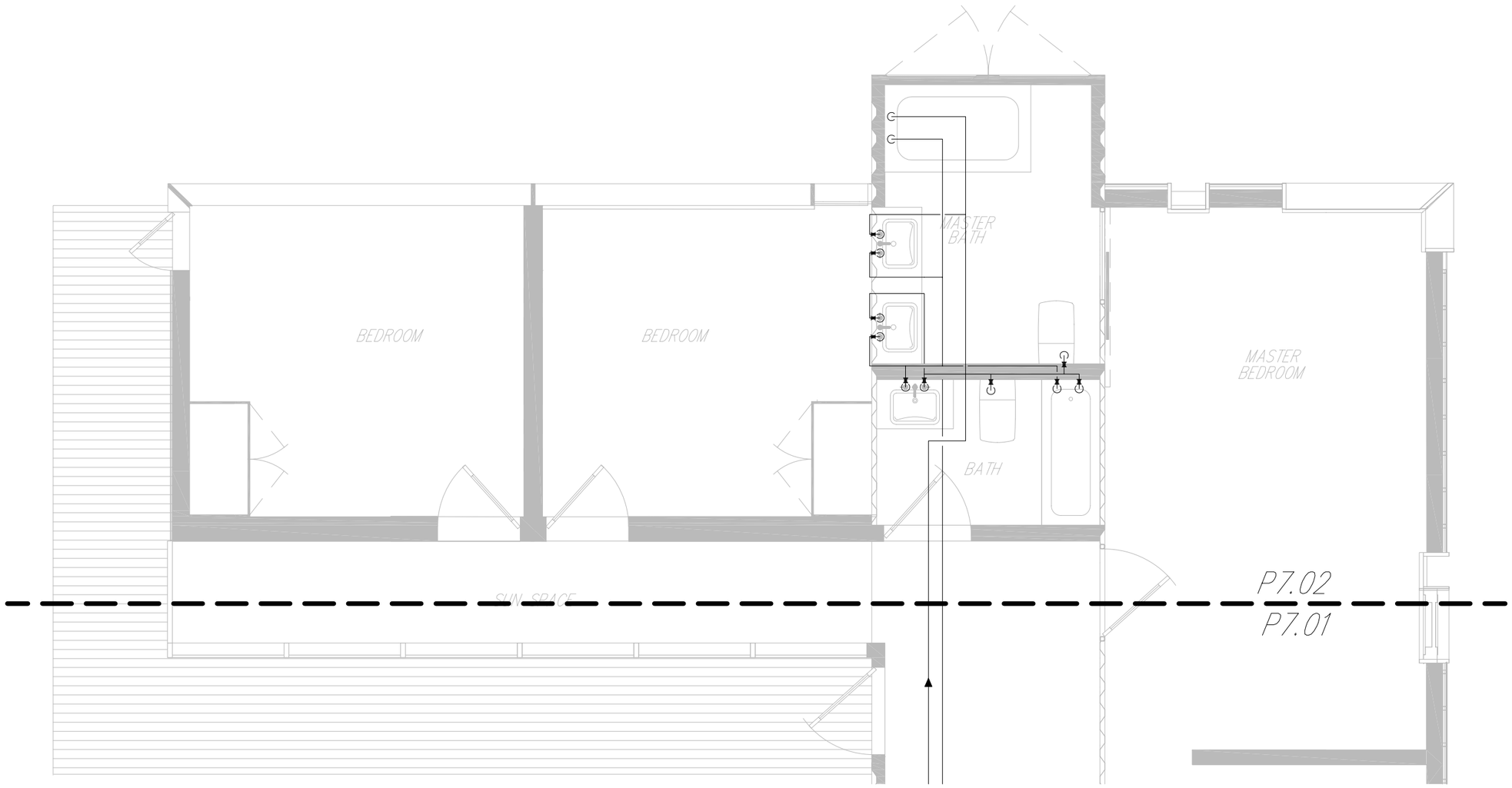

1 COMPLETE HOUSE PLUMBING SUPPLY PLAN
1/4" – 1'-0"

LEGEND

⧗	WATER HAMMER ARRESTOR

Drawn by	Date
C.Corbin	August 7, 2007
Revised	Date

Complete House Plumbing Supply Plan

2007 Solar Decathlon

University of Colorado at Boulder
Civil, Environmental, and Architectural Engineering
428 UCB, Room ECCE 441
Boulder, CO 80309-0428

P7.02

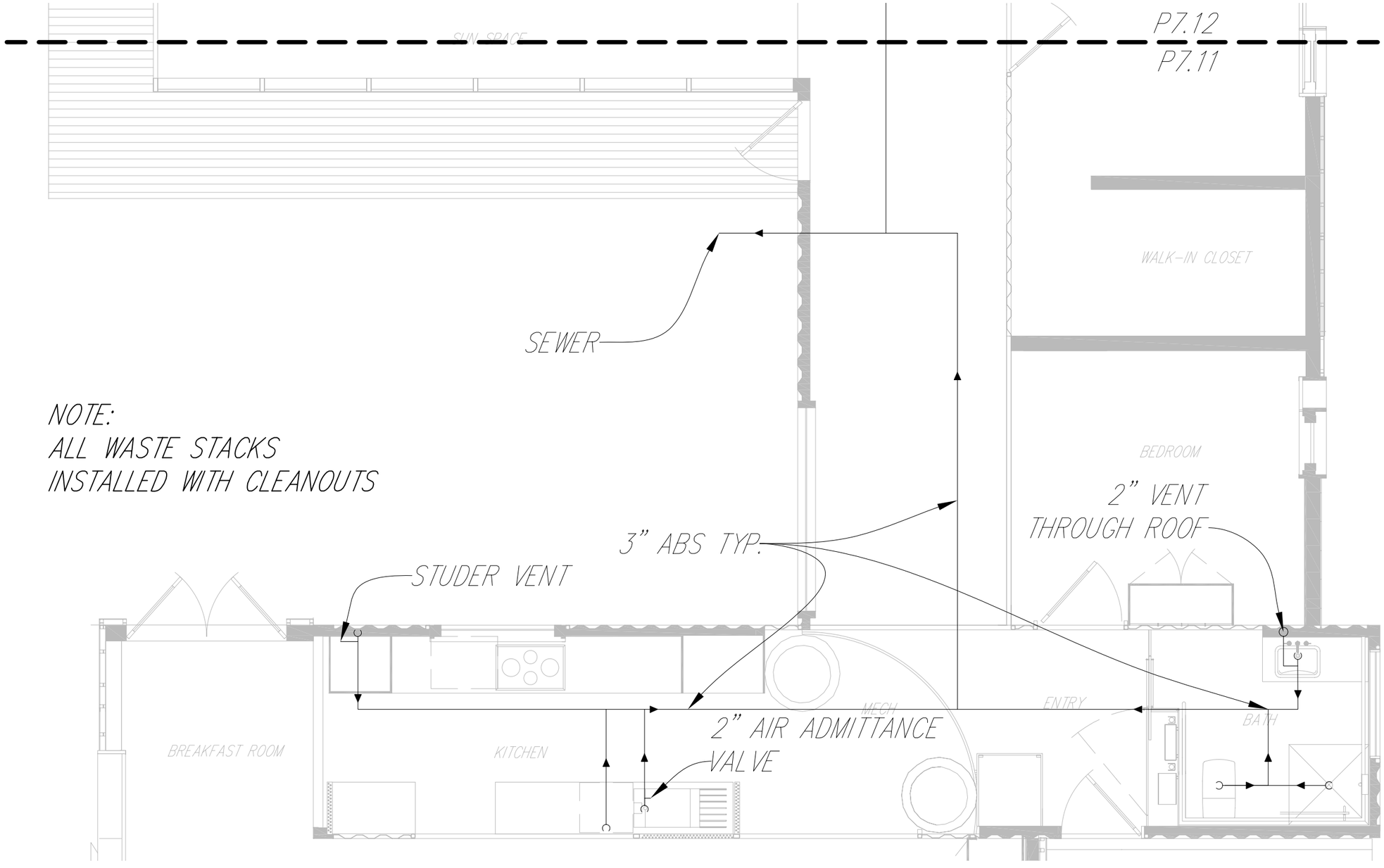

1 COMPLETE HOUSE PLUMBING DWV PLAN
1/4" – 1'-0"

Drawn by	Date
C.Corbin	August 7, 2007
Revised	Date

2007 Solar Decathlon

University of Colorado at Boulder
Civil, Environmental, and Architectural Engineering
428 UCB, Room ECCE 441
Boulder, CO 80309-0428

Complete House Plumbing DWV Plan

0 1' 2' 4' 8'

P7.11

NOTE:
ALL WASTE STACKS
INSTALLED WITH CLEANOUTS

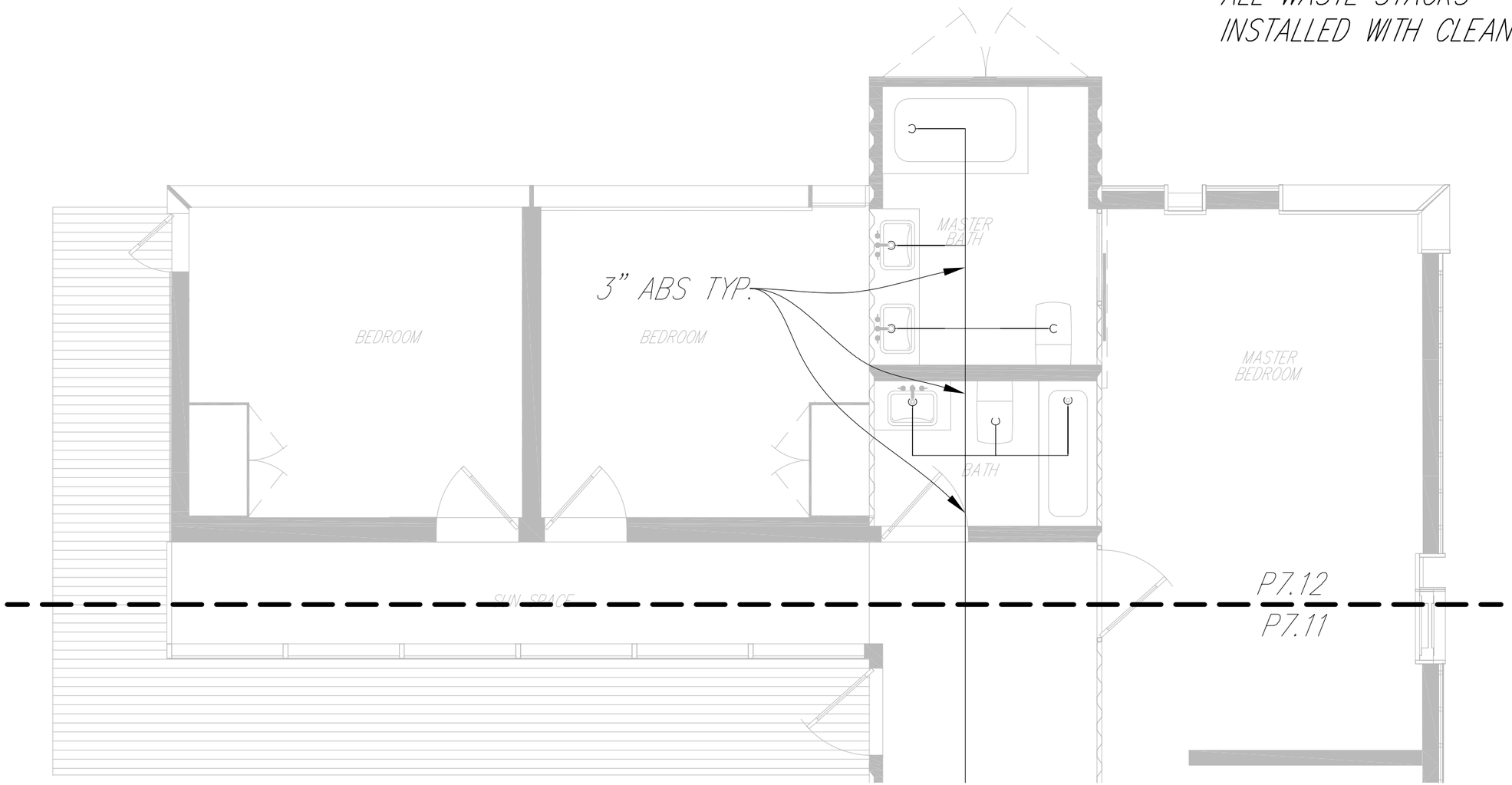

1 COMPLETE HOUSE PLUMBING DWV PLAN
1/4" – 1'-0"

Drawn by	Date
C.Corbin	August 7, 2007
Revised	Date

2007 Solar Decathlon

University of Colorado at Boulder
Civil, Environmental, and Architectural Engineering
428 UCB, Room ECCE 441
Boulder, CO 80309-0428

Complete House Plumbing DWV Plan

0 1' 2' 4' 8'

P7.12

Fixtures

Fixture Location	Make	Model	Name	Color
Bathroom toilet	Kohler	K-19796	Escale Dual Flush toilet tank&	White
			Escale Dual Flush toilet bowl	White
Supply Angle	Kohler	K-7637	Angle SUpply Elbow	Polished Chrome
Lavatory SInk	Kohler	K-2214-G	Ladena Undermount Lav SInk	White
Bathroom faucet	Kohler	K-14410-4	Stillness widespread lav faucet	Polished chrome
Thermostatic Valve	Kohler	K-304-NA	Rite-Temp Valve	n/a
Bathroom shower	Kohler	K-8543	Mastershower Eco handshower	Polished chrome
	Kohler	K-8516	Mastershower slide bar kit	Polished chrome
	Kohler	K-9513	Mastershower wall supply elbow	Polished chrome
Kitchen faucet	Kohler	K-6331	Evoke kitchen sink faucet	Vibrant Stainless

1 PLUMBING SCHEDULE
N.T.S.

Drawn by C.Corbin
Date August 7, 2007
Revised Date

2007 Solar Decathlon

University of Colorado at Boulder
Civil, Environmental, and Architectural Engineering
428 UCB, Room ECCE 441
Boulder, CO 80309-0428

Plumbing Schedule

P8.01

Competition Water Requirements		
Filling Tanks		
Hot		230 gallons
Cold		100 gallons
DWH		50 gallons
Shower Tests		
10 Tests	@20 gallons	200 gallons
Appliances		
Clostheswasher		11.2 gallons
Dishwasher		10 gallons
Pre-competition Testing		
Showers		5 gallons
Dishwasher		2.5 gallons
Clostheswasher		5.6 gallons
Demonstration Use		
5 Tour Days	@10 gallons	50 gallons
	Sub Total	664 gallons
	20% Safety Factor	57 gallons
	Total	721 gallons

1 PLUMBING COMPETITION REQUIREMENTS
N.T.S.

Drawn by C.Corbin
Date August 7, 2007
Revised Date

Plumbing Competition Requirements 2007 Solar Decathlon

University of Colorado at Boulder
Civil, Environmental, and Architectural Engineering
428 UCB, Room ECCE 441
Boulder, CO 80309-0428

P8.02