SYMBOL LEGEND	
MARK	DESCRIPTION
1	STRUCTURAL GRID TAG
	NORTH ARROW
A4 / A101	SECTION TAG
1 / A101	ELEVATION TAG
A1 / A101	DETAIL CALLOUT
0 2' 4' 8'	GRAPHIC SCALE
06 11 00.A2	REFERENCE KEYNOTE TAG
NAME ELEVATION	ELEVATION MARKER

DRAWING ANNOTATION			
TYPE	ABBREVIATION	NUMBER	MODULE REFERENCE
MODULE	M	0	
WALL	WA	00	0
FLOOR	FL	00	0
ROOF	RF	00	0
WINDOW	WI	00	0
EXTERNAL DOOR	DO	00	0
INTERNAL DOOR	ID	00	0
JOINERY UNIT	JN	00	0

EXAMPLE:

TYPE = WALL — WA02-4

NUMBER = 02 — MODULE REFERENCE = 4

SHEET LIST

Sheet Name	Sheet Number
CONTENTS, GENERAL NOTES, SYMBOLS AND ABBREVIATIONS	G-001
EMERGENCY EGRESS PLAN	G-102
DECK SUBSTRUCTURE PLAN	L-102
DECK FRAMING PLAN	L-103
RAMP ELEVATIONS	L-201
UTILITY DECK SECTION	L-301
LANDSCAPE TRANSVERSE SECTIONS	L-302
LANDSCAPE TRANVSERSE SECTIONS	L-303
WEST DECK SECTION	L-304
NORTH DECK SECTIONS	L-305
LONGITUDINAL RAMP SECTION	L-306
COASTAL PLANTER SECTIONS	L-413
TYPICAL PLANTER DETAILS	L-502
INNER PLANTER DETAILS	L-503
NORTH WEST SEAT DETAILS	L-506
SCREEN DETAILS	L-509
DECK DETAILS	L-510
DECK MODULE TYPES A & B	L-602
DECK MODULE TYPE C	L-603
DECK MODULE TYPE D & E	L-604
DECK MODULE TYPE F	L-605
DECK MODULE TYPE G & H	L-606
DECK MODULE TYPE J & K	L-607
DECK MODULE TYPE L	L-608
DECK MODULE TYPE M	L-609
DECK MODULE TYPE N & O	L-610
DECK MODULE TYPE P & Q	L-611
DECK MODULE TYPE R & S	L-612
EXTERIOR BENCH	L-701
FOUNDATION PLAN	S-101
FLOOR FRAMING PLAN	S-102
ROOF FRAMING & CANOPY FRAMING PLANS	S-103
STRUCTURAL ENGINEERS' PLANS	S-201
STRUCTURAL ENGINEERS' BRACING PLAN	S-202
STRUCTURAL ENGINEERS' ROOF PLAN	S-203
STRUCTURAL ENGINEERS' CANOPY ROOF PLAN	S-204
STRUCTURAL ENGINEERS DETAIL SKETCHES	S-210
STRUCTURAL ENGINEERS DETAIL SKETCHES	S-211
STRUCTURAL ENGINEERS DETAIL SKETCHES	S-212
STRUCTURAL ENGINEERS DETAIL SKETCHES	S-213
STRUCTURAL ENGINEERS DETAIL SKETCHES	S-214
STRUCTURAL ENGINEERS DETAIL SKETCHES	S-215
STRUCTURAL ENGINEERS DETAIL SKETCHES	S-216
STRUCTURAL ENGINEERS DETAIL SKETCHES	S-217
STRUCTURAL ENGINEERS DETAIL SKETCHES	S-218
STRUCTURAL ENGINEERS SKETCHES	S-219
STRUCTURAL ENGINEERS DETAIL SKETCHES	S-220
STRUCTURAL ENGINEERS DETAIL SKETCHES	S-221
PREFABRICATED PANEL LOCATION SECTIONS	S-301
FOUNDATION SUB FRAME	S-506
BEARER CONNECTION DETAILS	S-508
TYPICAL FRAME EXPLODED	S-901
SITE PLAN	A-101
FLOOR PLAN	A-111
ROOF PLAN	A-112
REFLECTED CEILING PLAN	A-121
ELEVATIONS	A-211
ELEVATIONS	A-212
BUILDING SECTIONS	A-301
BUILDING SECTIONS	A-302
EXPLODED MODULES SCHEMATIC	A-401
WALL TYPE 1	A-411
WALL TYPE 2	A-412
WALL TYPE 3	A-413
WALL TYPE 4	A-414
WALL TYPE 5	A-415
WALL TYPE 6	A-417
WALL TYPE 7	A-419
WALL TYPE 8	A-420
WALL TYPE 9	A-421
FL01-1	A-432
FL02-2	A-433
FL05-4	A-434
FL06-5	A-435
FL07-6	A-436
ROOF TYPES - ISOMETRIC	A-441

SHEET LIST

Sheet Name	Sheet Number
ROOF TYPE 1 - CONSTRUCTION DRAWINGS	A-445
ROOF TYPE 2 - CONSTRUCTION DRAWINGS	A-448
ROOF TYPE 3 - CONSTRUCTION DRAWINGS	A-451
CANOPY PLAN	A-461
CANOPY ELEVATIONS	A-462
CANOPY MODULES S1 & S2	A-474
CANOPY MODULES S3 & S4	A-475
CANOPY MODULES S5 & S6	A-476
CANOPY MODULES S7 & S8	A-477
CANOPY MODULES S9 & S10	A-478
CANOPY MODULES S11 & S13	A-479
CANOPY MODULES S12 & S14	A-480
SERVICES SHED PLANS	A-490
SERVICE SHED ELEVATIONS	A-491
BULKHEAD SECTION	A-493
TYPICAL MODULE PLAN DETAILS	A-501
TYPICAL MODULE SECTION DETAILS	A-511
SHED SECTION DETAILS	A-512
BATHROOM SECTION DETAILS	A-513
FIXED & HINGED WINDOW DETAILS	A-531
WINDOW SILL DETAIL	A-532
SKYLIGHT & BIFOLD DOOR DETAILS	A-533
BIFOLD & CANOPY DETAILS	A-534
SKYLIGHT JAMB DETAILS	A-535
GLULAM FIXING DETAILS	A-581
CANOPY BATTENS	A-582
CANOPY BATTENS VERTICAL SLATS	A-583
CLADDING LAYOUT PLAN	A-591
CLADDING ASSEMBLY SECTION	A-592
CLADDING PANEL LAYOUT NORTH ELEVATION	A-593
CLADDING PANEL LAYOUT SOUTH ELEVATION	A-594
CLADDING PANEL LAYOUT EAST & WEST ELEVATIONS	A-595
CLADDING PANEL DETAILS	A-596
CLADDING WALL CHANNELS	A-597
CLADDING COMPONENT DETAILS	A-598
INTERIOR ELEVATIONS	I-211
INTERIOR ELEVATIONS	I-212
INTERIOR FRAMING ELEVATIONS	I-213
KITCHEN PLAN	I-411
KITCHEN ELEVATIONS	I-421
KITCHEN SECTION 01	I-431
KITCHEN SECTION 02	I-432
KITCHEN SECTION 03	I-433
DINING TABLE	I-441
DINING TABLE EXPLODED ISO & DETAIL	I-442
DINING TABLE - DETAILS	I-443
BATHROOM PLAN & LDY PLAN	I-451
BATHROOM ELEVATIONS	I-461
LAUNDRY ELEVATIONS	I-462
BATHROOM & LAUNDRY SECTION SOUTH	I-464
WASHING MACHINE CABINET	I-465
HYDRONIC DRYER	I-466
REMOVABLE CEILING PANELS PLAN	I-470
REMOVEABLE CEILING ASSEMBLY- SECTIONS	I-471
REMOVABLE CEILING ASSEMBLY- SECTIONS	I-472
REMOVABLE CEILING PANELS - LOUNGE	I-473
REMOVABLE CEILING PANELS - KITCHEN	I-474
REMOVABLE CEILING PANELS - BATHROOM	I-475
REMOVABLE CEILING PANELS - LAUNDRY	I-476
KITCHEN PLAN DETAILS WEST	I-501
KITCHEN PLAN DETAILS EAST	I-502
BATHROOM PLAN DETAILS	I-511
LOUNGE JOINERY UNITS - PLAN	I-531
LOUNGE JOINERY UNITS - SECTION (CLOSED)	I-534
LOUNGE JOINERY UNITS - SECTION (OPEN)	I-535
LOUNGE JOINERY UNIT SECTIONS	I-536
LOUNGE JOINERY UNIT - SECTIONS	I-537
LIVING ROOM JOINERY EXPLODED ISOMETRIC	I-538
DOUBLE SOFA BED DETAILS	I-539
BEDSIDE STORAGE UNIT AND OTTOMAN DETAILS	I-541
BUNK BED DETAILS	I-542
ABOVE BUNK SHELVING DETAILS	I-543
STUDY UNIT ELEVATIONS	I-553
STUDY UNIT SECTIONS	I-554
STUDY UNIT PLAN SECTIONS	I-555
FIRE DETECTION AND ALARM	F-101

SHEET LIST

Sheet Name	Sheet Number
SPRINKLER COVERAGE PLAN	F-102
FIRE PROTECTION PIPING LAYOUT PLAN	F-103
FIRE SUPPRESSION ISOMETRIC	F-900
PLUMBING SYMBOLS AND NOTES	P-001
PLUMBING SCHEMATIC	P-100
PLUMBING & GREYWATER SITE PLAN	P-101
PLUMBING SUPPLY PLAN	P-102
PLUMBING - WASTE WATER	P-105
WASTE WATER SECTION	P-106
PLUMBING SUPPLY SECTION	P-300
PLUMBING SUPPLY SECTION - SHED	P-301
HYDRONIC DRYING ROOM	P-400
WATER DELIVERY SCHEMATIC	P-901
WASTE WATER REMOVAL SCHEMATIC	P-902
WASTE WATER ISOMETRIC	P-903
FRESH WATER ISOMETRIC	P-904
PLUMBING ISOMETRICS	P-905
HVAC EQUIPMENT AND DISTRIBUTION PLAN	M-101
DUCTING LOCATION PLAN	M-102
SUPPLY AIR EQUIPMENT PLAN	M-103
SUPPLY AIR ELEVATION	M-201
RETURN AIR ELEVATION	M-202
DIFFUSERS & GRILLS ELEVATION	M-203
HVAC DUCTING ISOMETRICS	M-901
ELECTRICAL DISTRIBUTION SITE PLAN	E-101
ELECTRICAL POWER & LIGHTING PLAN	E-111
PV SYSTEMS PLAN	E-112
POWER PLAN DETAILS	E-113
ELECTRICAL PLAN - KITCHEN	E-201
ELECTRICAL ELEVATIONS	E-205
POWER METER ELEVATION	E-214
POWER METER FRAME FABRICATION DETAILS	E-215
ELECTRICAL MODULE CONNECTION DETAIL	E-400
ELECTRICAL MODULE CONNECTION ISOMETRIC	E-401
ELECTRICAL CONNECTION DETAIL	E-402
CONNECTORS SCHEDULE	E-403
PV BRACKET DETAILS 01	E-411
PV BRACKET DETAILS 02	E-412
PV BRACKET ISOMETRIC	E-414
ONE-LINE DIAGRAM	E-601
3 LINE DIAGRAM	E-602
3 LINE DIAGRAM CONTINUED	E-603
THREE-LINE DIAGRAM CONTINUED	E-604
ELECTRIC ISOMETRICS	E-901
TELECOMMUNICATIONS WIRING PLAN	T-101
TEAM INTERCONNECTION FLOOR PLAN	T-102
TRANSPORT	O-102
ASSEMBLY SEQUENCE	O-103
ASSEMBLY SEQUENCE	O-104
ASSEMBLY SEQUENCE	O-105
ASSEMBLY SEQUENCE	O-106
ASSEMBLY SEQUENCE	O-107
ASSEMBLY SEQUENCE	O-108
DISSASSEMBLY SEQUENCE	O-109
DISSASSEMBLY SEQUENCE	O-110

FIRST LIGHT NZ

TEAM NAME: FIRSTLIGHT NZ

ADDRESS: 139 VIVIAN STREET
TE ARO, WELLINGTON
NEWZEALAND

CONTACT: INFO@FIRSTLIGHTHOUSE.AC.NZ
WWW.FIRSTLIGHTHOUSE.AC.NZ

CONSULTANTS

TENNENT + BROWN ARCHITECTS

DUNNING THORNTON CONSULTANTS LTD

LEAP AUSTRALASIA LTD

SOUTHERN PERSPECTIVES / SOLAR CITY

CLIENT

U.S. DEPARTMENT OF ENERGY

SOLAR DECATHLON 2011

WWW.SOLARDECATHLON.GOV

U.S. DEPARTMENT OF ENERGY SOLAR DECATHLON

MARK	DATE	DESCRIPTION
CN	11-01-11	FOR CONSTRUCTION

LOT NUMBER: LOT NUMBER

DRAWN BY: AUTHOR

CHECKED BY: CHECKER

COPYRIGHT: VICTORIA UNIVERSITY

SHEET TITLE

CONTENTS, GENERAL NOTES, SYMBOLS AND ABBREVIATIONS

G-001

8/13/2011 8:30:49 AM

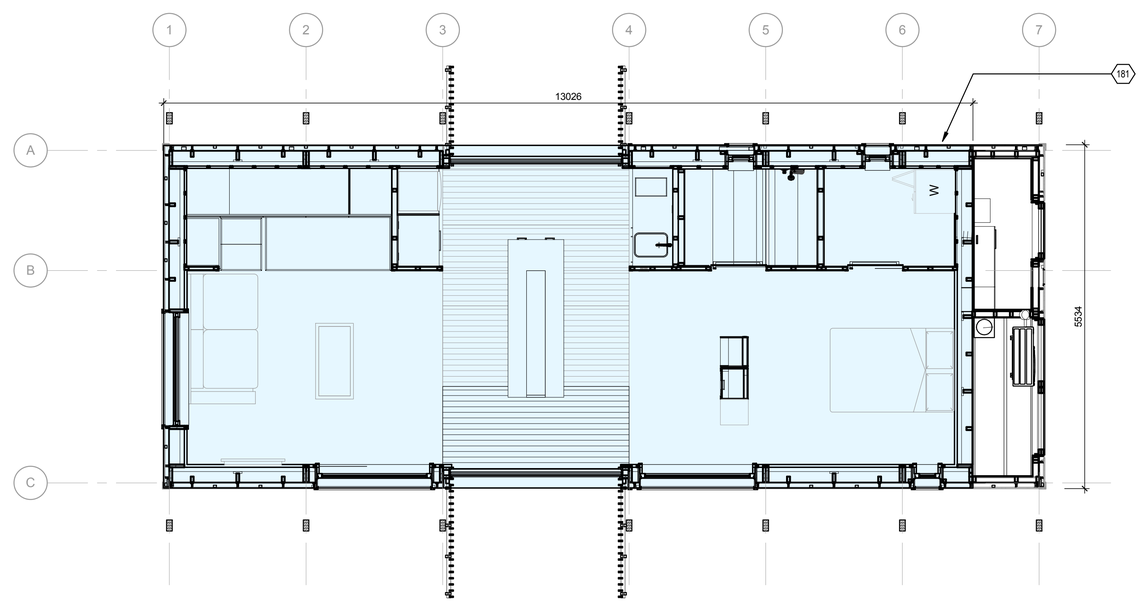

A2 FINISHED SQUARE FOOTAGE COMPLIANCE PLAN
1 : 48

0 2' 4' 8'

GENERAL SHEET NOTES

REFERENCE KEYNOTES

SHEET KEYNOTES

181 FINISHED AREA: 71.9 SQUARE METERS / 774 SQUARE FEET SHOWN SHADED. FINISHED SQUARE FOOTAGE CALCULATIONS FOR THIS HOUSE WERE MADE BASED ON PLAN DIMENSIONS ONLY AND MAY VARY FROM THE FINISHED SQUARE FOOTAGE OF THE HOUSE AS BUILT.

FIRST LIGHT NZ

TEAM NAME:	FIRSTLIGHT NZ
ADDRESS:	139 VIVIAN STREET TE ARO, WELLINGTON NEWZEALAND
CONTACT:	INFO@FIRSTLIGHTHOUSE.AC.NZ WWW.FIRSTLIGHTHOUSE.AC.NZ

CONSULTANTS

TENNENT + BROWN ARCHITECTS
DUNNING THORNTON CONSULTANTS LTD
LEAP AUSTRALASIA LTD
SOUTHERN PERSPECTIVES / SOLAR CITY

CLIENT

U.S. DEPARTMENT OF ENERGY
SOLAR DECATHLON 2011
WWW.SOLARDECATHLON.GOV

U.S. DEPARTMENT OF ENERGY SOLAR DECATHLON

MARK	DATE	DESCRIPTION
CN	11-01-11	FOR CONSTRUCTION

LOT NUMBER:	LOT NUMBER
DRAWN BY:	Author
CHECKED BY:	Checker
COPYRIGHT:	VICTORIA UNIVERSITY

SHEET TITLE

FINISHED SQUARE FOOTAGE COMPLIANCE PLAN

G-101

8/13/2011 8:31:06 AM

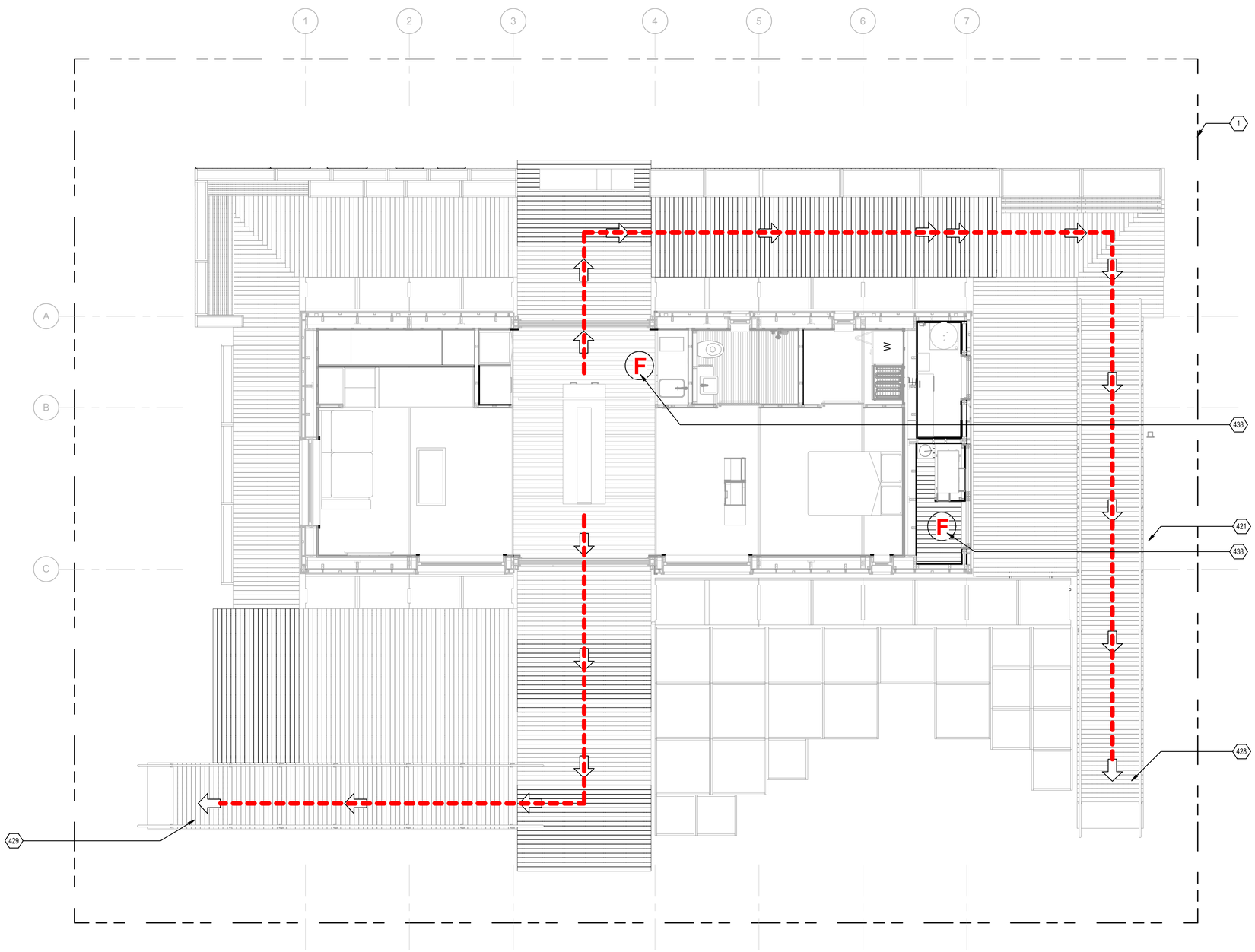

A1 EMERGENCY EGRESS PLAN
1 : 48

GENERAL SHEET NOTES

REFERENCE KEYNOTES

SHEET KEYNOTES

1	SITE BOUNDARY
421	WALKWAY GRADIENT 1:20
428	PRIMARY ENTRY / EXIT TO HOUSE
429	SECONDARY ENTRY / EXIT TO HOUSE
438	FIRE EXTINGUISHERS LOCATED IN THE KITCHEN AND SHED. EXACT LOCATION TO BE CONFIRMED ON SITE

FIRST LIGHT NZ

TEAM NAME:	FIRST LIGHT
ADDRESS:	139 VIVIAN STREET TE ARO, WELLINGTON NEWZEALAND
CONTACT:	ELINUTTALL@GMAIL.COM WWW.FIRSTLIGHTHOUSE.AC.NZ

CONSULTANTS

TENNENT + BROWN ARCHITECTS
DUNNING THORNTON CONSULTANTS LTD
LEAP AUSTRALASIA LTD
SOUTHERN PERSPECTIVES / SOLAR CITY

CLIENT

U.S. DEPARTMENT OF ENERGY
SOLAR DECATHLON 2011
WWW.SOLARDECATHLON.GOV

U.S. DEPARTMENT OF ENERGY SOLAR DECATHLON

MARK	DATE	DESCRIPTION
CN	11-01-11	FOR CONSTRUCTION

LOT NUMBER:	LOT NUMBER
DRAWN BY:	Author
CHECKED BY:	Checker
COPYRIGHT:	

SHEET TITLE

EMERGENCY EGRESS PLAN

G-102

8/13/2011 8:31:27 AM

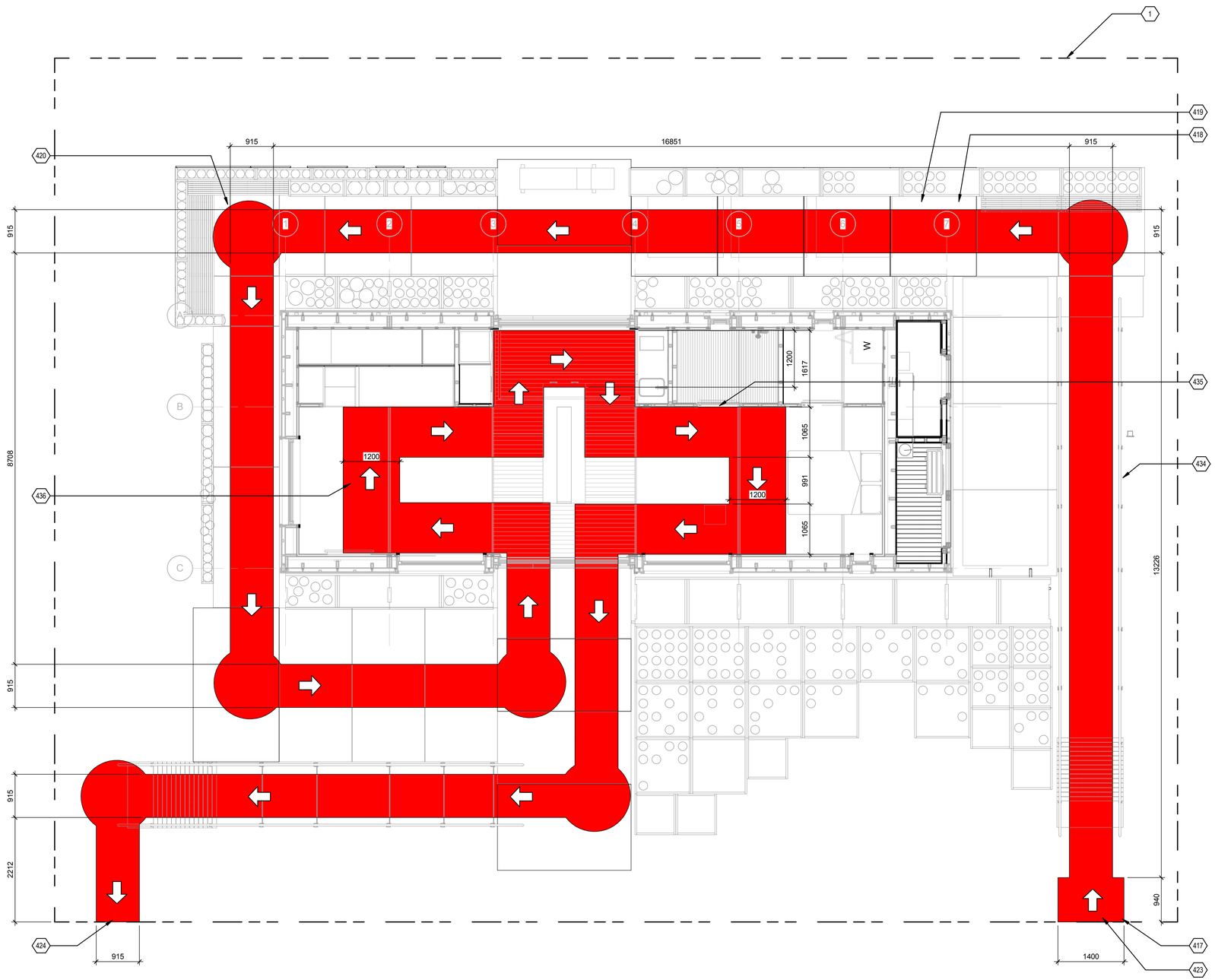

A1 ACCESSIBILITY/HOUSE TOUR PLAN

1 : 48

0 2' 4' 8'

8/13/2011 8:31:43 AM

GENERAL SHEET NOTES

REFERENCE KEYNOTES

SHEET KEYNOTES

1	SITE BOUNDARY
182	TOTAL AREA SHOWN SHADED: 91.5 SQUARE METERS / 984 SQUARE FEET
417	ORGANISER SUPPLIED WALKWAY MATERIAL SHOWN SHADED
418	ALL DECKING LAID PERPENDICULAR TO DIRECTION OF TRAVEL
419	CLEAR LENGTH AND WIDTH OF LANDING COMPLIANT WITH ICC/ANSI 117.1 2003 SECTION 405.7.2 & 405.7.3
420	ALL TURNING CIRCLES COMPLIANT WITH ICC/ANSI 117.1-2003 SECTION 304.3.1
423	SITE ENTRY - TOUR ROUTE STARTS
424	SITE EXIT - TOUR ROUTE ENDS
434	HANDRAIL REQUIRED ON WALKWAY DUE TO 500MM GRADIENT CHANGE OVER LENGTH OF RUN. REFER ICC/ANSI 117.1:2003 SECTION 405.8
435	MANEUVERING CLEARANCE AT INTERIOR SLIDING DOORS COMPLIANT WITH ICC/ANSI 117.1:2003 SECTION 404.2.3.2
436	180 DEGREE TURN AROUND FURNITURE OBJECTS IN KITCHEN AND LOUNGE COMPLIANT WITH ICC/ANSI 117.1:2003 SECTION 403.5

FIRST LIGHT NZ

TEAM NAME:	FIRSTLIGHT NZ
ADDRESS:	139 VIVIAN STREET TE ARO, WELLINGTON NEWZEALAND
CONTACT:	INFO@FIRSTLIGHTHOUSE.AC.NZ WWW.FIRSTLIGHTHOUSE.AC.NZ

CONSULTANTS

TENNENT + BROWN ARCHITECTS
DUNNING THORNTON CONSULTANTS LTD
LEAP AUSTRALASIA LTD
SOUTHERN PERSPECTIVES / SOLAR CITY

CLIENT

U.S. DEPARTMENT OF ENERGY
SOLAR DECATHLON 2011
WWW.SOLARDECATHLON.GOV

U.S. DEPARTMENT OF ENERGY SOLAR DECATHLON

MARK	DATE	DESCRIPTION
CN	11-01-11	FOR CONSTRUCTION

LOT NUMBER:	LOT NUMBER
DRAWN BY:	Author
CHECKED BY:	Checker
COPYRIGHT:	VICTORIA UNIVERSITY

SHEET TITLE

ADA TOUR ROUTE & EGRESS COMPLIANCE PLAN

G-103

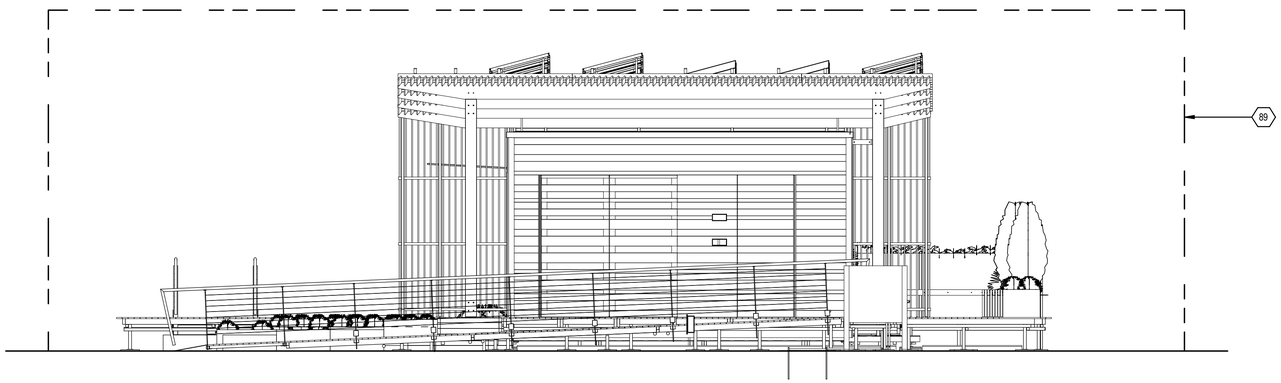

C1 SOLAR ENVELOPE - EAST
1 : 48

0 2' 4' 8'

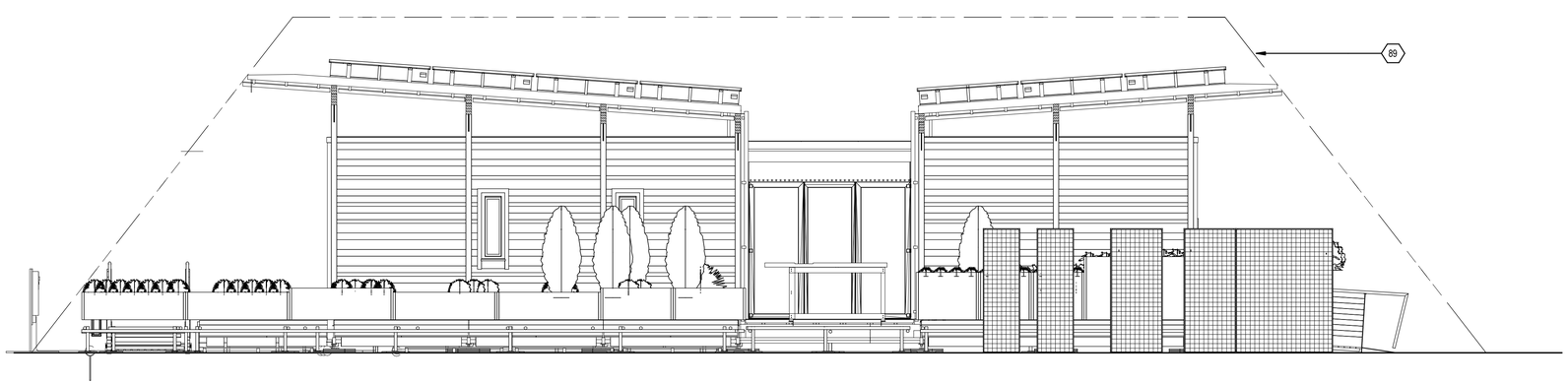

A1 SOLAR ENVELOPE - NORTH
1 : 48

0 2' 4' 8'

GENERAL SHEET NOTES

REFERENCE KEYNOTES

SHEET KEYNOTES

89	SOLAR ENVELOPE FOR WASHINGTON SITE SHOWN DASHED

FIRST LIGHT NZ

TEAM NAME:	FIRSTLIGHT NZ
ADDRESS:	139 VIVIAN STREET TE ARO, WELLINGTON NEWZEALAND
CONTACT:	INFO@FIRSTLIGHTHOUSE.AC.NZ WWW.FIRSTLIGHTHOUSE.AC.NZ

CONSULTANTS

TENNENT + BROWN ARCHITECTS
DUNNING THORNTON CONSULTANTS LTD
LEAP AUSTRALASIA LTD
SOUTHERN PERSPECTIVES / SOLAR CITY

CLIENT

U.S. DEPARTMENT OF ENERGY
SOLAR DECATHLON 2011
WWW.SOLARDECATHLON.GOV

U.S. DEPARTMENT OF ENERGY SOLAR DECATHLON

MARK	DATE	DESCRIPTION
CN	11-01-11	FOR CONSTRUCTION

LOT NUMBER:	LOT NUMBER
DRAWN BY:	Author
CHECKED BY:	Checker
COPYRIGHT:	VICTORIA UNIVERSITY

SHEET TITLE

SOLAR ENVELOPE COMPLIANCE ELEVATIONS

G-201

8/13/2011 8:32:06 AM

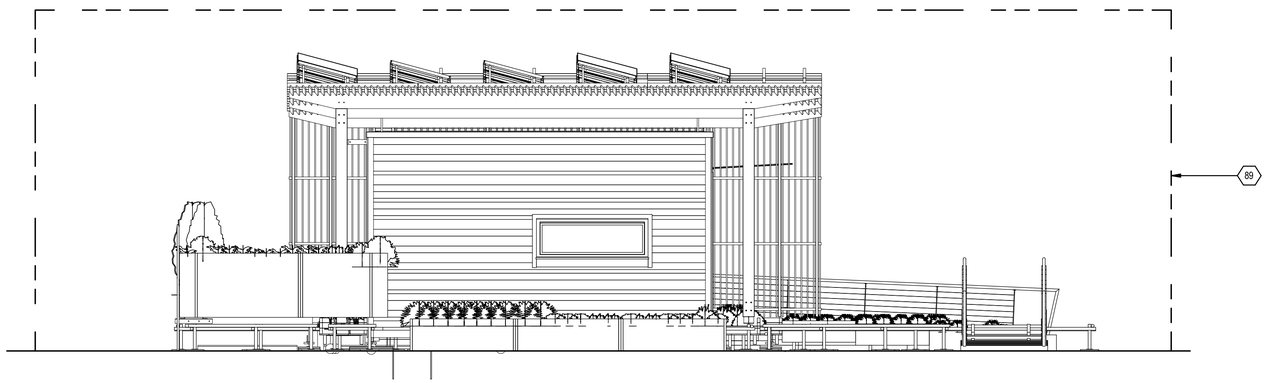

C1 SOLAR ENVELOPE - WEST
1 : 48

0 2' 4' 8'

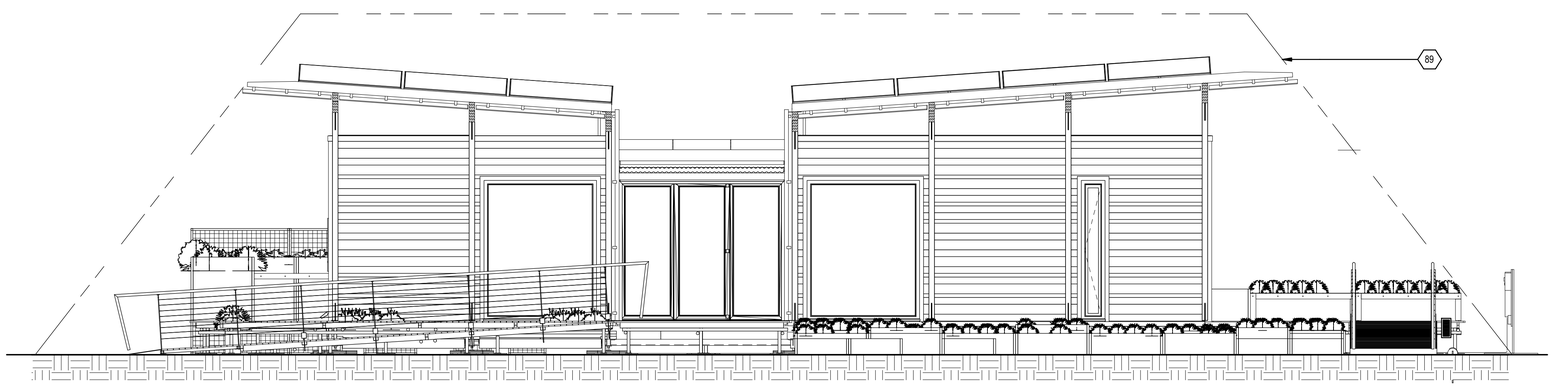

A1 SOLAR ENVELOPE - SOUTH
1 : 48

0 2' 4' 8'

GENERAL SHEET NOTES

REFERENCE KEYNOTES

SHEET KEYNOTES

89 SOLAR ENVELOPE FOR WASHINGTON SITE SHOWN DASHED

FIRST LIGHT NZ

TEAM NAME:	FIRSTLIGHT NZ
ADDRESS:	139 VIVIAN STREET TE ARO, WELLINGTON NEWZEALAND
CONTACT:	INFO@FIRSTLIGHTHOUSE.AC.NZ WWW.FIRSTLIGHTHOUSE.AC.NZ

CONSULTANTS

TENNENT + BROWN ARCHITECTS
DUNNING THORNTON CONSULTANTS LTD
LEAP AUSTRALASIA LTD
SOUTHERN PERSPECTIVES / SOLAR CITY

CLIENT

U.S. DEPARTMENT OF ENERGY
SOLAR DECATHLON 2011
WWW.SOLARDECATHLON.GOV

U.S. DEPARTMENT OF ENERGY SOLAR DECATHLON

MARK	DATE	DESCRIPTION
CN	11-01-11	FOR CONSTRUCTION

LOT NUMBER:	LOT NUMBER
DRAWN BY:	Author
CHECKED BY:	Checker
COPYRIGHT:	VICTORIA UNIVERSITY

SHEET TITLE

SOLAR ENVELOPE COMPLIANCE ELEVATIONS

G-202

8/13/2011 8:32:31 AM

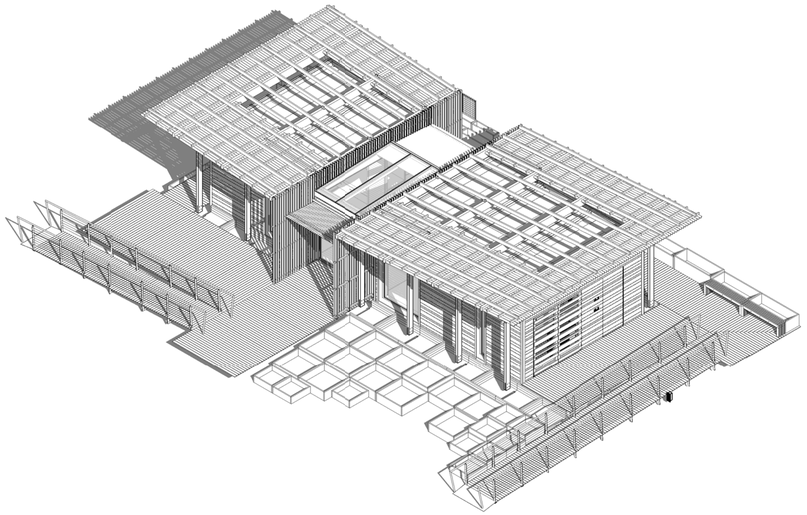

C1 SHADED PERSPECTIVE - 9AM

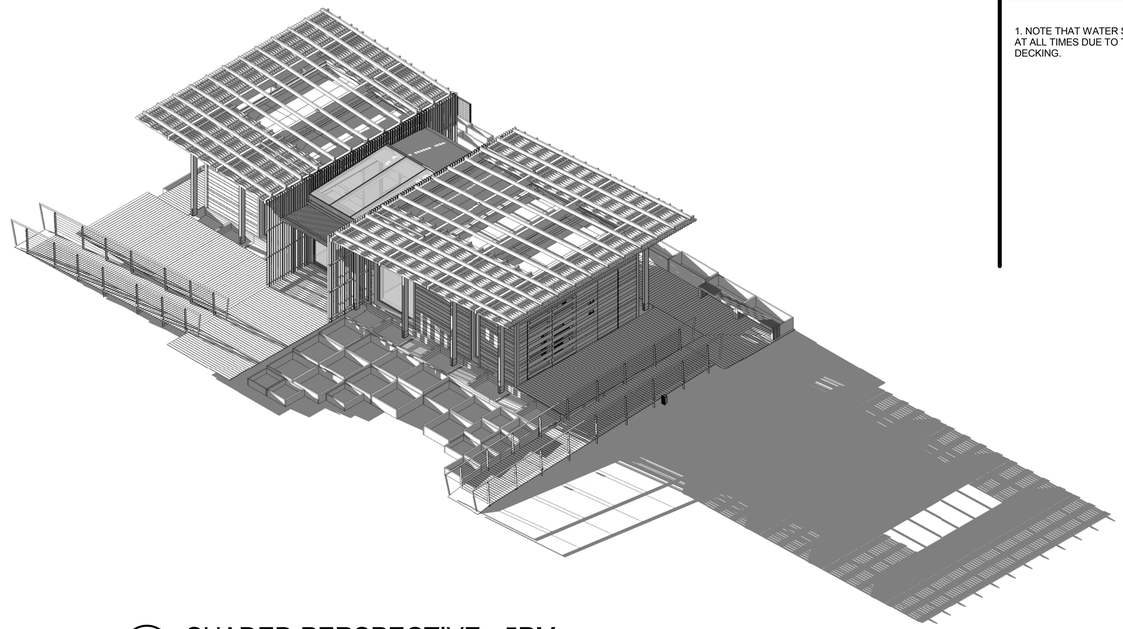

C4 SHADED PERSPECTIVE - 5PM

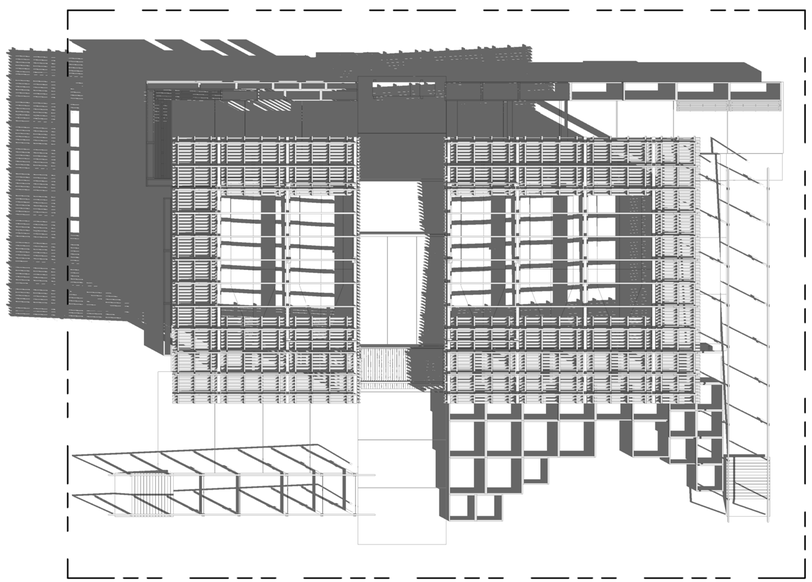

A1 SHADED PLAN VIEW - 9AM

1 : 96

0 4' 8' 16'

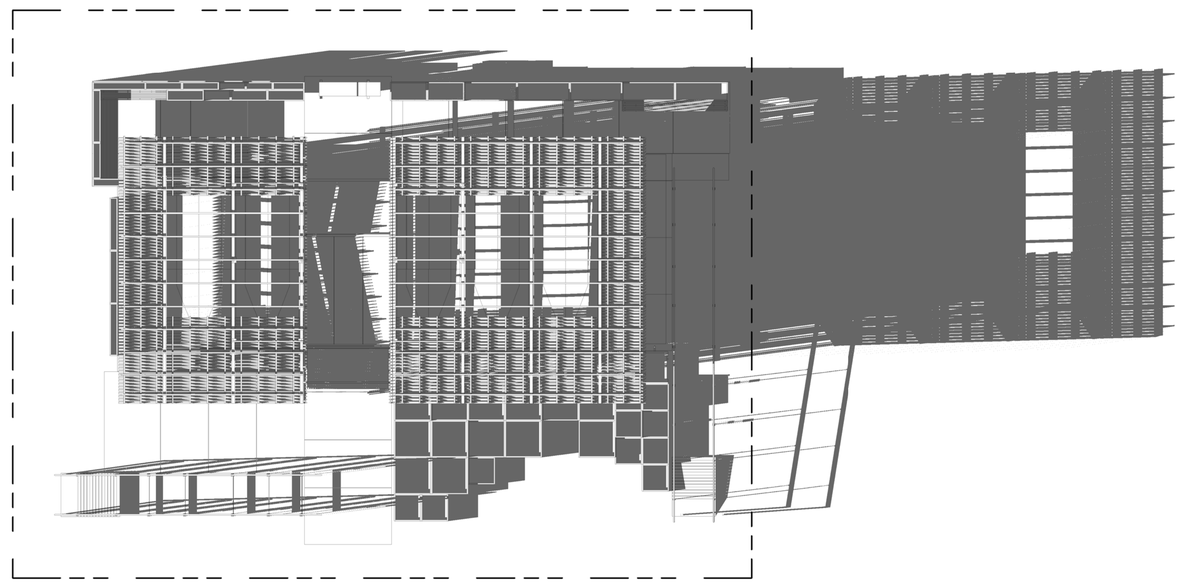

A4 SHADED PLAN VIEW - 5PM

1 : 96

0 4' 8' 16'

GENERAL SHEET NOTES

1. NOTE THAT WATER SUPPLY TANKS ARE FULLY SHADED AT ALL TIMES DUE TO THEIR LOCATION UNDERNEATH DECKING.

FIRST LIGHT NZ

TEAM NAME:	FIRSTLIGHT NZ
ADDRESS:	139 VIVIAN STREET TE ARO, WELLINGTON NEWZEALAND
CONTACT:	INFO@FIRSTLIGHTHOUSE.AC.NZ WWW.FIRSTLIGHTHOUSE.AC.NZ

CONSULTANTS

TENNENT + BROWN ARCHITECTS
DUNNING THORNTON CONSULTANTS LTD
LEAP AUSTRALASIA LTD
SOUTHERN PERSPECTIVES / SOLAR CITY

CLIENT

U.S. DEPARTMENT OF ENERGY
SOLAR DECATHLON 2011
WWW.SOLARDECATHLON.GOV

U.S. DEPARTMENT OF ENERGY SOLAR DECATHLON

MARK	DATE	DESCRIPTION
CN	11-01-11	FOR CONSTRUCTION

LOT NUMBER:	LOT NUMBER
DRAWN BY:	Author
CHECKED BY:	Checker
COPYRIGHT:	VICTORIA UNIVERSITY

SHEET TITLE

SHADING DIAGRAMS

G-601

8/13/2011 8:33:15 AM

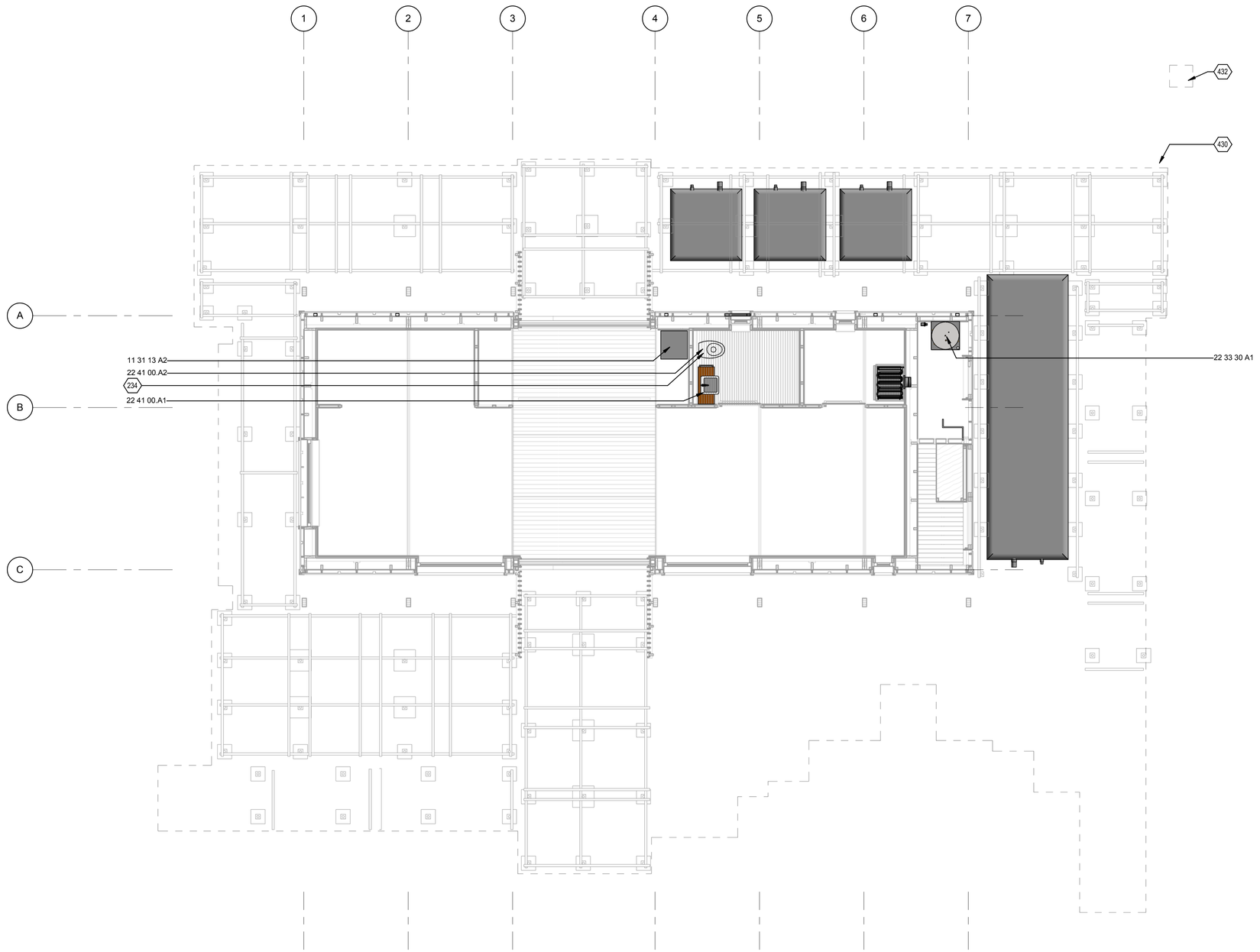

A1 LIQUID LOCATION AND SPILL CONTAINMENT PLAN
1 : 48

0 2' 4' 8'

8/13/2011 8:33:30 AM

GENERAL SHEET NOTES

1.
DECKING MODULES NOT SHOWN IN THIS VIEW FOR CLARITY.

REFERENCE KEYNOTES

11 31 13 A2	FISHER & PAYKEL 6 PLACE SINGLE DISHDRAWER MODEL DD60SCX6
22 33 30 A1	360 LITRE INSULATED STAINLESS STEEL HOT WATER CYLINDER WITH OVERFLOW TRAY
22 41 00.A1	380 X 380 X 130MM TRENZ SEMI RECESSED BASIN. MODEL 4148-C
22 41 00.A2	IMEX CB-1088 ARCO BACK-TO-WALL TOILET PAN WITH FULLY FRAMED 'WATERMARK' DUAL FLUSH IN-WALL CISTERN. REFER MANUFACTURERS SPECIFICATIONS FOR INSTALLATION DETAILS

SHEET KEYNOTES

234	WC NOT CONNECTED TO MAIN DRAIN AND CAPPED FOR PURPOSES OF THE COMPETITION
430	OUTLINE OF DECKING/LANDSCAPE SHOWN DASHED
432	GENERATOR LOCATION. NOTE THAT THE GENERATOR IS ONSITE FOR THE ASSEMBLY AND DISASSEMBLY PHASES ONLY AND WILL BE REMOVED DURING THE COMPETITION WEEK. GENERATOR TO SIT ON SPILL CONTAINMENT BERM (SIZED TO SUIT)

FIRST LIGHT NZ

TEAM NAME:	FIRSTLIGHT NZ
ADDRESS:	139 VIVIAN STREET TE ARO, WELLINGTON NEWZEALAND
CONTACT:	INFO@FIRSTLIGHTHOUSE.AC.NZ WWW.FIRSTLIGHTHOUSE.AC.NZ

CONSULTANTS

TENNENT + BROWN ARCHITECTS
DUNNING THORNTON CONSULTANTS LTD
LEAP AUSTRALASIA LTD
SOUTHERN PERSPECTIVES / SOLAR CITY

CLIENT

U.S. DEPARTMENT OF ENERGY
SOLAR DECATHLON 2011
WWW.SOLARDECATHLON.GOV

U.S. DEPARTMENT OF ENERGY SOLAR DECATHLON

MARK	DATE	DESCRIPTION
CN	11-01-11	FOR CONSTRUCTION

LOT NUMBER:	LOT NUMBER
DRAWN BY:	AUTHOR
CHECKED BY:	CHECKER
COPYRIGHT:	VICTORIA UNIVERSITY

SHEET TITLE

LIQUID LOCATION AND SPILL CONTAINMENT PLAN

H-101

U.S. DEPARTMENT OF ENERGY SOLAR DECATHLON

14 March 2011
Revision

Solar Decathlon 2011
West Potomac Park
Washington, DC

200ft.

N

A1 SITE LOCATION

8/13/2011 8:27:48 AM

GENERAL SHEET NOTES

REFERENCE KEYNOTES

SHEET KEYNOTES

FIRST LIGHT NZ

TEAM NAME:	FIRSTLIGHT NZ
ADDRESS:	139 VIVIAN STREET TE ARO, WELLINGTON NEWZEALAND
CONTACT:	INFO@FIRSTLIGHTHOUSE.AC.NZ WWW.FIRSTLIGHTHOUSE.AC.NZ

CONSULTANTS

TENNENT + BROWN ARCHITECTS
DUNNING THORNTON CONSULTANTS LTD
LEAP AUSTRALASIA LTD
SOUTHERN PERSPECTIVES / SOLAR CITY

CLIENT

U.S. DEPARTMENT OF ENERGY
SOLAR DECATHLON 2011
WWW.SOLARDECATHLON.GOV

U.S. DEPARTMENT OF ENERGY SOLAR DECATHLON

MARK	DATE	DESCRIPTION
CN	11-01-11	FOR CONSTRUCTION

LOT NUMBER:	LOT NUMBER
DRAWN BY:	AUTHOR
CHECKED BY:	CHECKER
COPYRIGHT:	VICTORIA UNIVERSITY

SHEET TITLE

SITE LOCATION

C-101

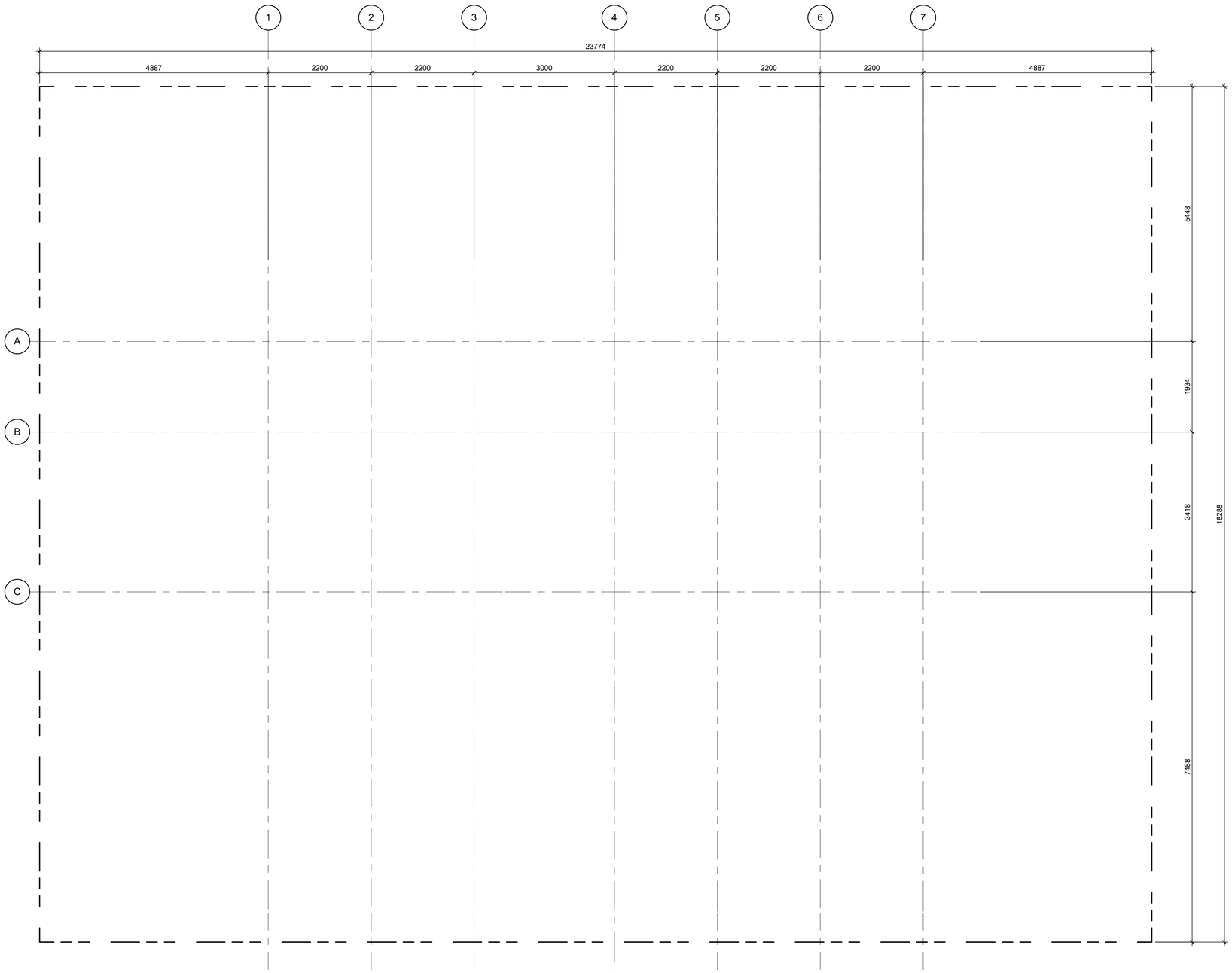

A1 SITE GRID PLAN
1 : 48

0 2' 4' 8'

GENERAL SHEET NOTES

REFERENCE KEYNOTES

SHEET KEYNOTES

FIRST LIGHT NZ

TEAM NAME:	FIRSTLIGHT NZ
ADDRESS:	139 VIVIAN STREET TE ARO, WELLINGTON NEWZEALAND
CONTACT:	INFO@FIRSTLIGHTHOUSE.AC.NZ WWW.FIRSTLIGHTHOUSE.AC.NZ

CONSULTANTS

TENNENT + BROWN ARCHITECTS
DUNNING THORNTON CONSULTANTS LTD
LEAP AUSTRALASIA LTD
SOUTHERN PERSPECTIVES / SOLAR CITY

CLIENT

U.S. DEPARTMENT OF ENERGY
SOLAR DECATHLON 2011
WWW.SOLARDECATHLON.GOV

U.S. DEPARTMENT OF ENERGY SOLAR DECATHLON

MARK	DATE	DESCRIPTION
CN	11-01-11	FOR CONSTRUCTION

LOT NUMBER:	LOT NUMBER
DRAWN BY:	AUTHOR
CHECKED BY:	CHECKER
COPYRIGHT:	VICTORIA UNIVERSITY

SHEET TITLE

SITE GRID PLAN

C-102

8/13/2011 8:27:51 AM

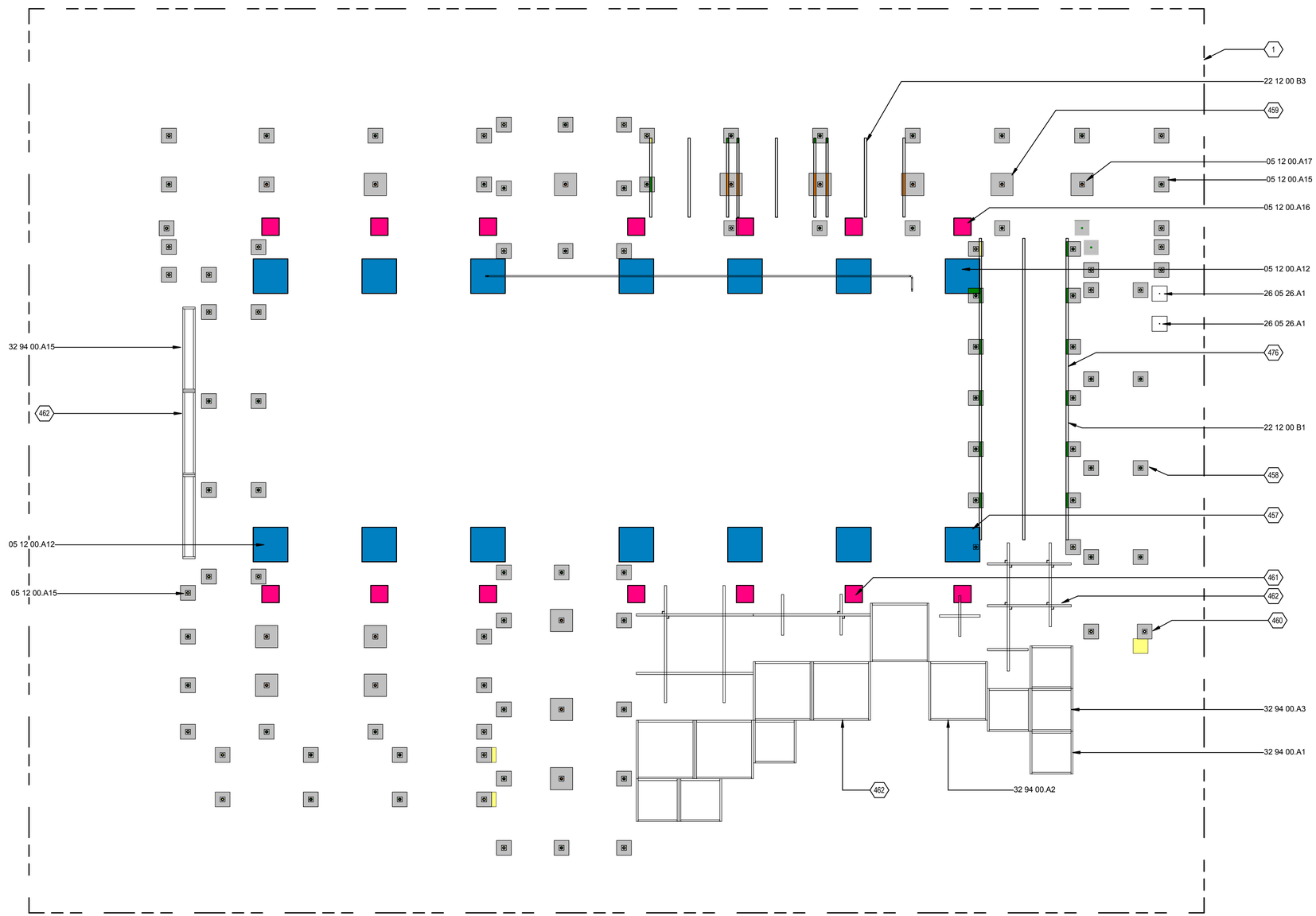

A1 GROUND CONTACT PLAN
1 : 48

0 2' 4' 8'

8/13/2011 8:27:56 AM

GENERAL SHEET NOTES

REFERENCE KEYNOTES

05 12 00.A12	ADJUSTABLE STEEL SCAFFOLD SCREW WITH 700X700MM PLYWOOD FOOTING. MAXIMUM VERTICAL DEVIATION 463MM
05 12 00.A15	300X300MM STEEL DECK SCAFFOLD FOOTING
05 12 00.A16	ADJUSTABLE STEEL SCAFFOLD SCREW WITH 350X350MM PLYWOOD FOOTING. MAXIMUM VERTICAL DEVIATION 463MM
05 12 00.A17	450X450MM STEEL DECK SCAFFOLD FOOTING
22 12 00 A1	3295 LITRES / 870 GALLONS POTABLE WATER SUPPLY LOCATED UNDERNEATH DECKING. TANK TO BE 'WET EARTH' BLADDER TANK - 6100 X 1800 X 300MM
22 12 00 A3	768 LITRE / 203 GALLON WASTE WATER STORAGE TANKS LOCATED UNDERNEATH DECKING. TANKS TO BE 'WET EARTH' BLADDER TANKS. 1600 X 1600 X 300MM
22 12 00 B1	TIMBER SUPPORT STRUCTURE FOR WATER SUPPLY BLADDER. 75 X 90MM BEARERS WITH 18MM PLY SHEET OVER. BEARING PRESSURE 50 KPA TO CENTRAL BEARER, 20 KPA TO OUTER BEARERS
22 12 00 B3	TIMBER SUPPORT STRUCTURE FOR GREY WATER TANKS. 75 X 90MM BEARERS WITH 18MM PLY OVER. BEARING PRESSURE 50 KPA FOR CENTRAL BEARER, 20 KPA FOR OUTER BEARERS
26 05 26.A1	ORGANISER SUPPLIED GROUNDING ELECTRODES. 15.9MM Ø GROUDING ROD TO EXTEND 460MM INTO GROUND. NOTE THAT THESE ARE THE ONLY ITEMS WHICH PENETRATE THE GROUND
32 94 00.A1	COASTAL PLANTER TYPE 1 - 864L X 864W X 258H MM
32 94 00.A2	COASTAL PLANTER TYPE 2 - 1184L X 1184W X 344H MM
32 94 00.A3	COASTAL PLANTER TYPE 3 - 864L X 864W X 344H MM
32 94 00.A15	TYPICAL PLANTER TYPE 15 - 1696L X 350W X 516H MM

SHEET KEYNOTES

1	SITE BOUNDARY
457	FOUNDATION ELEMENTS SHADED BLUE HAVE A MAXIMUM BEARING PRESSURE OF 70 KPA
458	FOUNDATION ELEMENTS SHADED GREEN HAVE BEARING PRESSURE OF 40-63 KPA
459	FOUNDATION ELEMENTS SHADED ORANGE HAVE BEARING PRESSURE OF 45-55 KPA
460	FOUNDATION ELEMENTS SHADED YELLOW HAVE BEARING PRESSURE OF 12-30 KPA
461	FOUNDATION ELEMENTS SHADED PINK HAVE A MAXIMUM BEARING PRESSURE OF 50 KPA
462	BEARERS FOR PLANTERS HAVE BEARING PRESSURE OF 28-50 KPA
476	NOTCH BEARERS FOR PLANTERS AND WATER BLADDERS WHERE THESE CROSS SCAFFOLD FOOTINGS

FIRST LIGHT NZ

TEAM NAME:	FIRSTLIGHT NZ
ADDRESS:	139 VIVIAN STREET TE ARO, WELLINGTON NEWZEALAND
CONTACT:	INFO@FIRSTLIGHTHOUSE.AC.NZ WWW.FIRSTLIGHTHOUSE.AC.NZ

CONSULTANTS

TENNENT + BROWN ARCHITECTS

DUNNING THORNTON CONSULTANTS LTD

LEAP AUSTRALASIA LTD

SOUTHERN PERSPECTIVES / SOLAR CITY

CLIENT

U.S. DEPARTMENT OF ENERGY

SOLAR DECATHLON 2011

WWW.SOLARDECATHLON.GOV

U.S. DEPARTMENT OF ENERGY SOLAR DECATHLON

MARK	DATE	DESCRIPTION
CN	11-01-11	FOR CONSTRUCTION

LOT NUMBER:	LOT NUMBER
DRAWN BY:	Author
CHECKED BY:	Checker
COPYRIGHT:	VICTORIA UNIVERSITY

SHEET TITLE

GROUND CONTACT PLAN

C-103

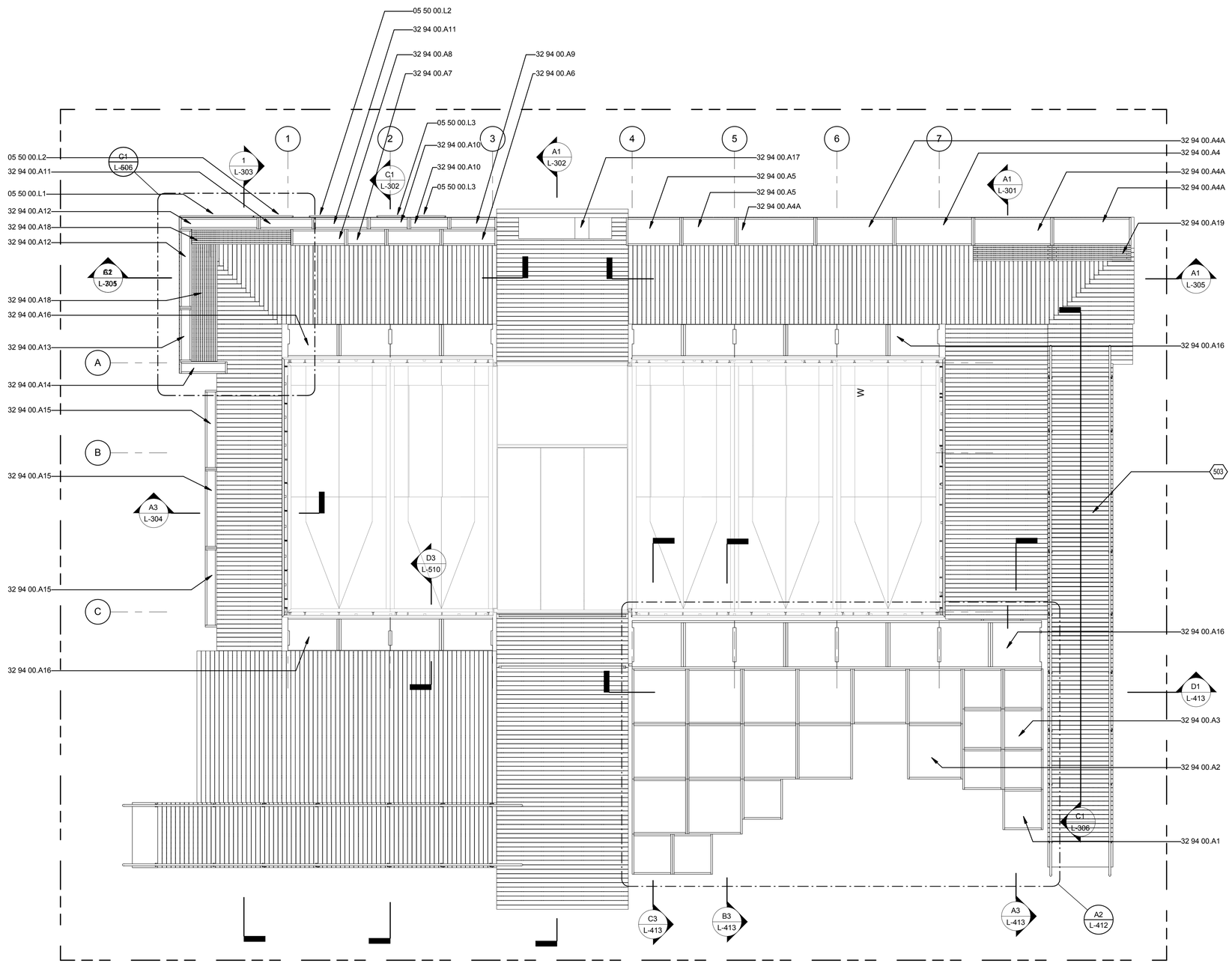

A1 LANDSCAPE SITE PLAN

1 : 48

0 2' 4' 8'

8/13/2011 8:39:05 AM

GENERAL SHEET NOTES

REFERENCE KEYNOTES

05 50 00.L1	LANDSCAPE SCREEN TYPE 1 - NUMBER NEEDED 2
05 50 00.L2	LANDSCAPE SCREEN TYPE 2 - NUMBER NEEDED 3
05 50 00.L3	LANDSCAPE SCREEN TYPE 3 - NUMBER NEEDED 2
32 94 00.A1	COASTAL PLANTER TYPE 1 - 864L X 864W X 258H MM
32 94 00.A2	COASTAL PLANTER TYPE 2 - 1184L X 1184W X 344H MM
32 94 00.A3	COASTAL PLANTER TYPE 3 - 864L X 864W X 344H MM
32 94 00.A4	TYPICAL PLANTER TYPE 4 - 1696L X 600W X 516H MM
32 94 00.A4A	TYPICAL PLANTER TYPE 4A - 1696L X 600W X 430H MM
32 94 00.A5	TYPICAL PLANTER TYPE 5 - 1184L X 600W X 516H MM
32 94 00.A6	TYPICAL PLANTER TYPE 6 - 1184L X 350W X 516H MM
32 94 00.A7	TYPICAL PLANTER TYPE 7 - 864L X 350W X 516H MM
32 94 00.A8	TYPICAL PLANTER TYPE 8 - 1184L X 350W X 774H MM
32 94 00.A9	TYPICAL PLANTER TYPE 9 - 1018L X 250W X 774H MM
32 94 00.A10	TYPICAL PLANTER TYPE 10 - 864L X 250W X 774H MM
32 94 00.A11	TYPICAL PLANTER TYPE 11 - 1184L X 250W X 1032H MM
32 94 00.A12	TYPICAL PLANTER TYPE 12 - 1696L X 250W X 1032H MM
32 94 00.A13	TYPICAL PLANTER TYPE 13 - 1154L X 250W X 1032H MM
32 94 00.A14	TYPICAL PLANTER TYPE 14 - 1018L X 250W X 1032H MM
32 94 00.A15	TYPICAL PLANTER TYPE 15 - 1696L X 350W X 516H MM
32 94 00.A16	INNER PLANTER BOX
32 94 00.A17	CONCRETE BENCH
32 94 00.A18	TIMBER SEAT FIXED TO PLANTERS
32 94 00.A19	FREESTANDING TIMBER SEAT

SHEET KEYNOTES

503	REFER TO L-130 FOR DECKING MODULE LAYOUT PLAN

FIRST LIGHT NZ

TEAM NAME:	FIRSTLIGHT NZ
ADDRESS:	139 VIVIAN STREET TE ARO, WELLINGTON NEWZEALAND
CONTACT:	INFO@FIRSTLIGHTHOUSE.AC.NZ WWW.FIRSTLIGHTHOUSE.AC.NZ

CONSULTANTS

TENNENT + BROWN ARCHITECTS

DUNNING THORNTON CONSULTANTS LTD

LEAP AUSTRALASIA LTD

SOUTHERN PERSPECTIVES / SOLAR CITY

CLIENT

U.S. DEPARTMENT OF ENERGY

SOLAR DECATHLON 2011

WWW.SOLARDECATHLON.GOV

U.S. DEPARTMENT OF ENERGY SOLAR DECATHLON

MARK	DATE	DESCRIPTION
CN	11-01-11	FOR CONSTRUCTION

LOT NUMBER:	LOT NUMBER
DRAWN BY:	Author
CHECKED BY:	CHECKER
COPYRIGHT:	VICTORIA UNIVERSITY

SHEET TITLE

LANDSCAPE SITE PLAN

L-101

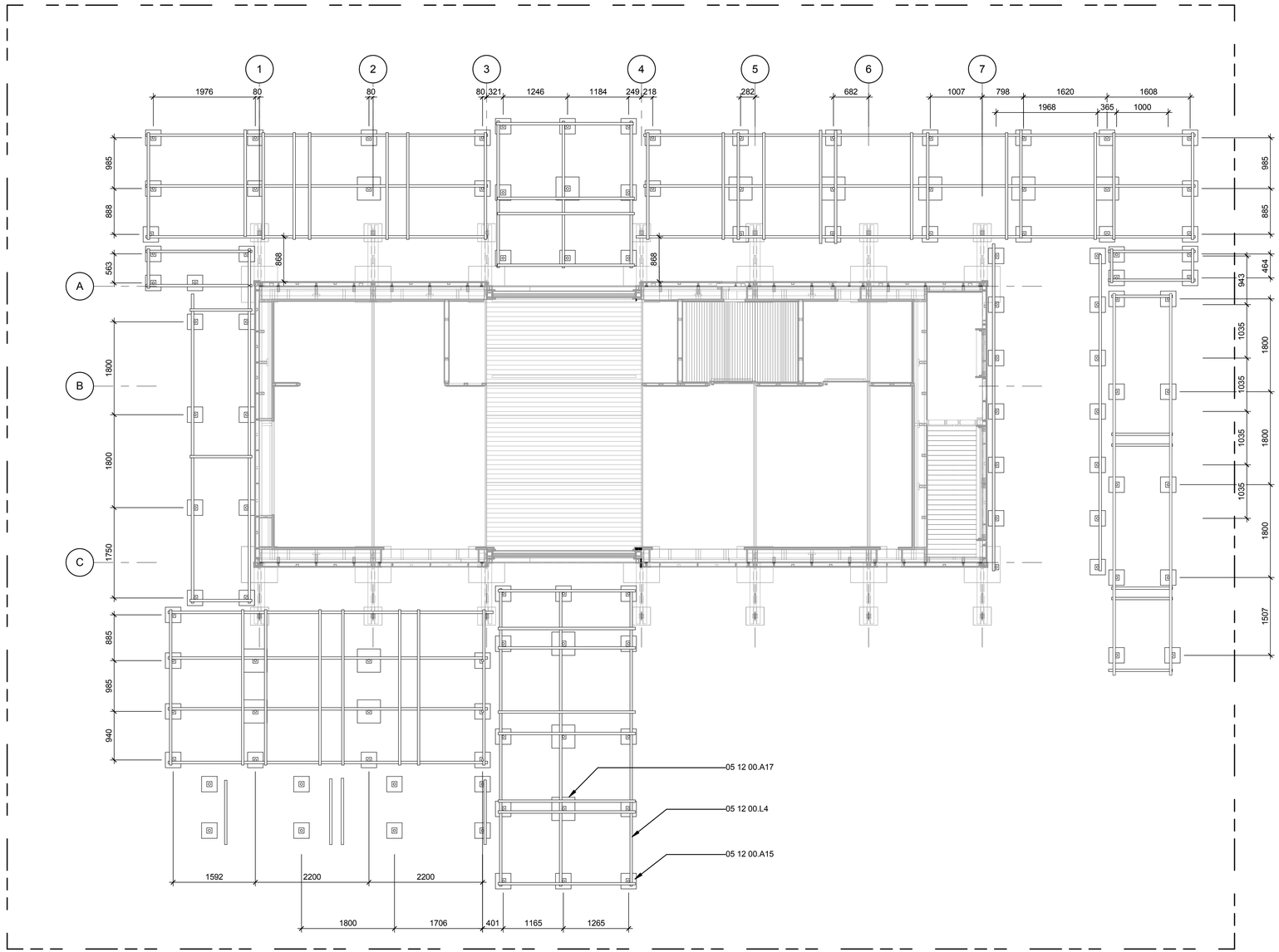

A1 DECK SUBSTRUCTURE PLAN
1 : 48

0 2' 4' 8'

GENERAL SHEET NOTES

REFERENCE KEYNOTES

05 12 00.A15	300X300MM STEEL DECK SCAFFOLD FOOTING
05 12 00.A17	450X450MM STEEL DECK SCAFFOLD FOOTING
05 12 00.L4	48MM STANDARD SCAFFOLD POLE

SHEET KEYNOTES

FIRST LIGHT NZ

TEAM NAME:	FIRST LIGHT
ADDRESS:	139 VIVIAN STREET TE ARO, WELLINGTON NEWZEALAND
CONTACT:	ELINUTTALL@GMAIL.COM WWW.FIRSTLIGHTHOUSE.AC.NZ

CONSULTANTS

TENNENT + BROWN ARCHITECTS
DUNNING THORNTON CONSULTANTS LTD
LEAP AUSTRALASIA LTD
SOUTHERN PERSPECTIVES / SOLAR CITY

CLIENT
U.S. DEPARTMENT OF ENERGY
SOLAR DECATHLON 2011
WWW.SOLARDECATHLON.GOV

U.S. DEPARTMENT OF ENERGY SOLAR DECATHLON

MARK	DATE	DESCRIPTION
CN	11-01-11	FOR CONSTRUCTION

LOT NUMBER:	LOT NUMBER
DRAWN BY:	Author
CHECKED BY:	Checker
COPYRIGHT:	

SHEET TITLE

DECK SUBSTRUCTURE PLAN

L-102

8/13/2011 8:39:12 AM

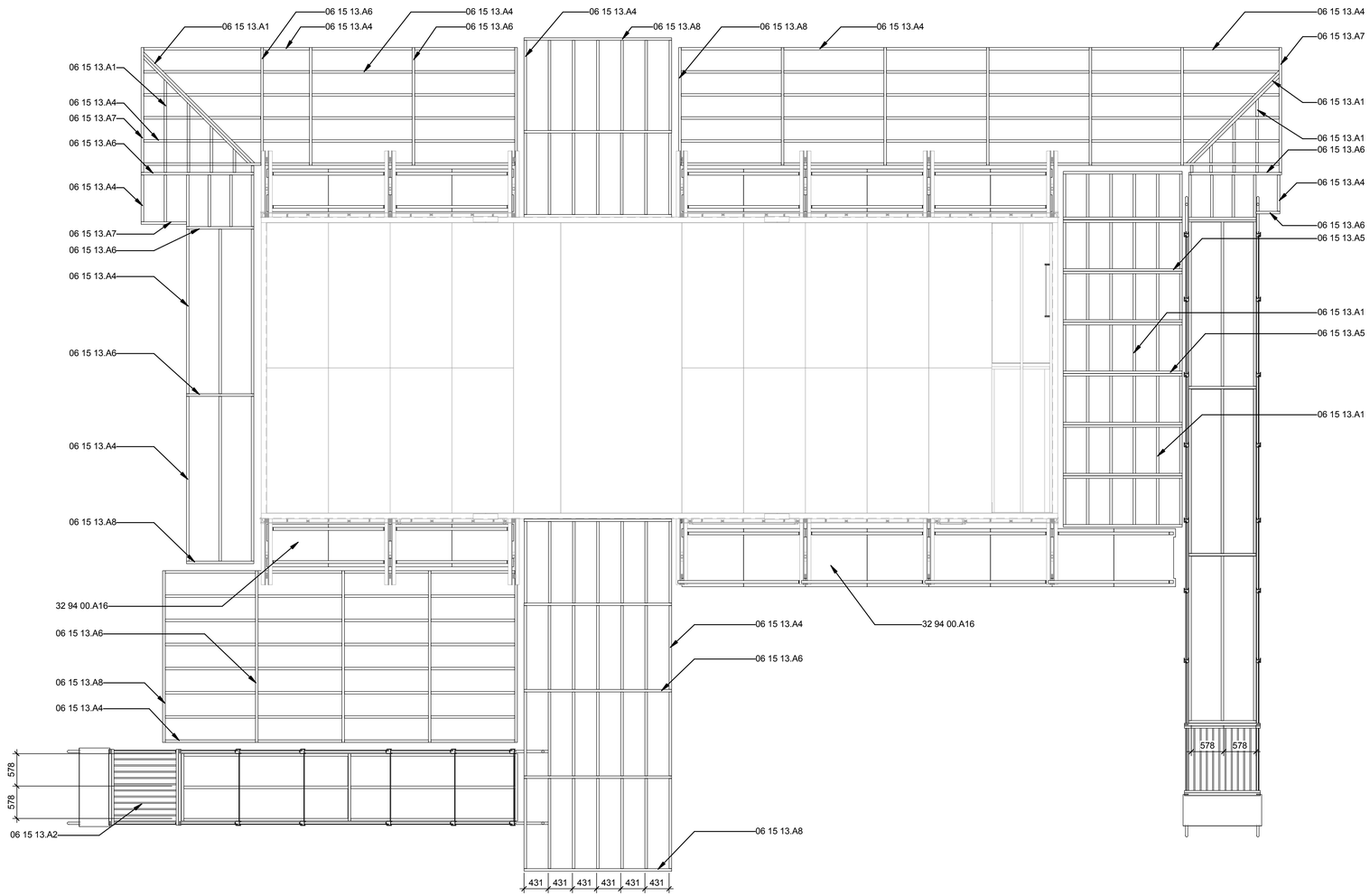

A1 DECK FRAMING REFLECTED PLAN

1 : 48

0 2' 4' 8'

GENERAL SHEET NOTES

REFERENCE KEYNOTES

06 15 13.A1	90X45MM BLOCKING TIMBER
06 15 13.A2	90X21MM DECKING TIMBER
06 15 13.A4	90X45MM TIMBER JOISTS
06 15 13.A5	140X45MM TIMBER JOIST
06 15 13.A6	45X45MM TIMBER HALF JOIST
06 15 13.A7	90X45MM TRIMMING JOIST
06 15 13.A8	90X45MM TIMBER END JOIST
32 94 00.A16	INNER PLANTER BOX

SHEET KEYNOTES

FIRST LIGHT NZ

TEAM NAME: FIRSTLIGHT NZ

ADDRESS: 139 VIVIAN STREET
TE ARO, WELLINGTON
NEWZEALAND

CONTACT: INFO@FIRSTLIGHTHOUSE.AC.NZ
WWW.FIRSTLIGHTHOUSE.AC.NZ

CONSULTANTS

TENNENT + BROWN ARCHITECTS

DUNNING THORNTON CONSULTANTS LTD

LEAP AUSTRALASIA LTD

SOUTHERN PERSPECTIVES / SOLAR CITY

CLIENT

U.S. DEPARTMENT OF ENERGY

SOLAR DECATHLON 2011

WWW.SOLARDECATHLON.GOV

U.S. DEPARTMENT OF ENERGY SOLAR DECATHLON

MARK	DATE	DESCRIPTION
CN	11-01-11	FOR CONSTRUCTION

LOT NUMBER:	LOT NUMBER
DRAWN BY:	Author
CHECKED BY:	Checker
COPYRIGHT:	VICTORIA UNIVERSITY

SHEET TITLE

DECK FRAMING PLAN

L-103

8/13/2011 8:39:17 AM

PLANTING SCHEDULE								
CODE	NAME	BOTANICAL NAME	FULL GROWN HEIGHT MM	FULL GROWN WIDTH MM	PLANTED HEIGHT MM	PLANTED WIDTH MM	GRADE (GALLONS)	COUNT
								371
1	CAREX	CAREX TESTACEA	500	500	200	200	0.5	162
2	NZ MOUNTAIN FLAX	PHORMIUM COOKIANUM	1000	100	250	600	0.5	82
3	COPROSMA	MUEHLENBECKIA ASTONII	1000	1000	300	300	0.5	45
4	LANCEWOOD	PSEUDOPANAX CRASSIFOLIUS	6000	2000	2000	300	5	10
5	NZ IRIS	LIBERTIA GRANDIFLORA	400	400	150	150	1	51
6	FORSTER'S CLEMATIS	CLEMATIS FORSTERI	3000	1000	1500	20	1	2
7	SHINING SPEENWORT	ASPLENIUM OBLONGIFOLIUM	1000	1000	300	300	0.5	28
8	HEN & CHICKEN FERN	ASPLENIUM BULBIFERUM	700	500	300	300	0.5	25
9	KIO KIO	BLECHNUM NOVAE-ZEALANDIAE	1000	2000	300	300	0.5	24
10	BLACK TREE FERN	CYATHEA MEDULLARIS	20000	5000	6700	500	5	5
11	SILVER SPEAR	ASTELIA CHATHAMICA	1500	1500	1500	1500	5	10
12	WESTLAND RED ASTELIA	ASTELIA NERVOSA 'WESTLAND'	1000	1000	800	800	3	12
13	WHIPCORD HEBE	HEBE 'KARO GOLDEN ESK'	600	600	150	150	1	9
14	PURPLE BIDIBIDI	ACEANA INERMIS PURPUREA	50	1000	100	100	0.5	12
15	DWARF TOETOE	CHIONOCHLOA FLAVICANS	1000	1000	350	350	1.5	15

A2 LANDSCAPE PLANTING PLAN
1 : 48

0 2' 4' 8'

GENERAL SHEET NOTES

REFERENCE KEYNOTES

SHEET KEYNOTES

504 REFER TO L-101 FOR PLANTER TYPES

FIRST LIGHT NZ

TEAM NAME:	FIRSTLIGHT NZ
ADDRESS:	139 VIVIAN STREET TE ARO, WELLINGTON NEWZEALAND
CONTACT:	INFO@FIRSTLIGHTHOUSE.AC.NZ WWW.FIRSTLIGHTHOUSE.AC.NZ

CONSULTANTS

TENNENT + BROWN ARCHITECTS
DUNNING THORNTON CONSULTANTS LTD
LEAP AUSTRALASIA LTD
SOUTHERN PERSPECTIVES / SOLAR CITY

CLIENT
U.S. DEPARTMENT OF ENERGY
SOLAR DECATHLON 2011
WWW.SOLARDECATHLON.GOV

U.S. DEPARTMENT OF ENERGY SOLAR DECATHLON

MARK	DATE	DESCRIPTION
CN	11-01-11	FOR CONSTRUCTION

LOT NUMBER:	LOT NUMBER
DRAWN BY:	Author
CHECKED BY:	Checker
COPYRIGHT:	VICTORIA UNIVERSITY

SHEET TITLE

LANDSCAPE PLANTING PLAN

L-104

8/13/2011 8:39:25 AM

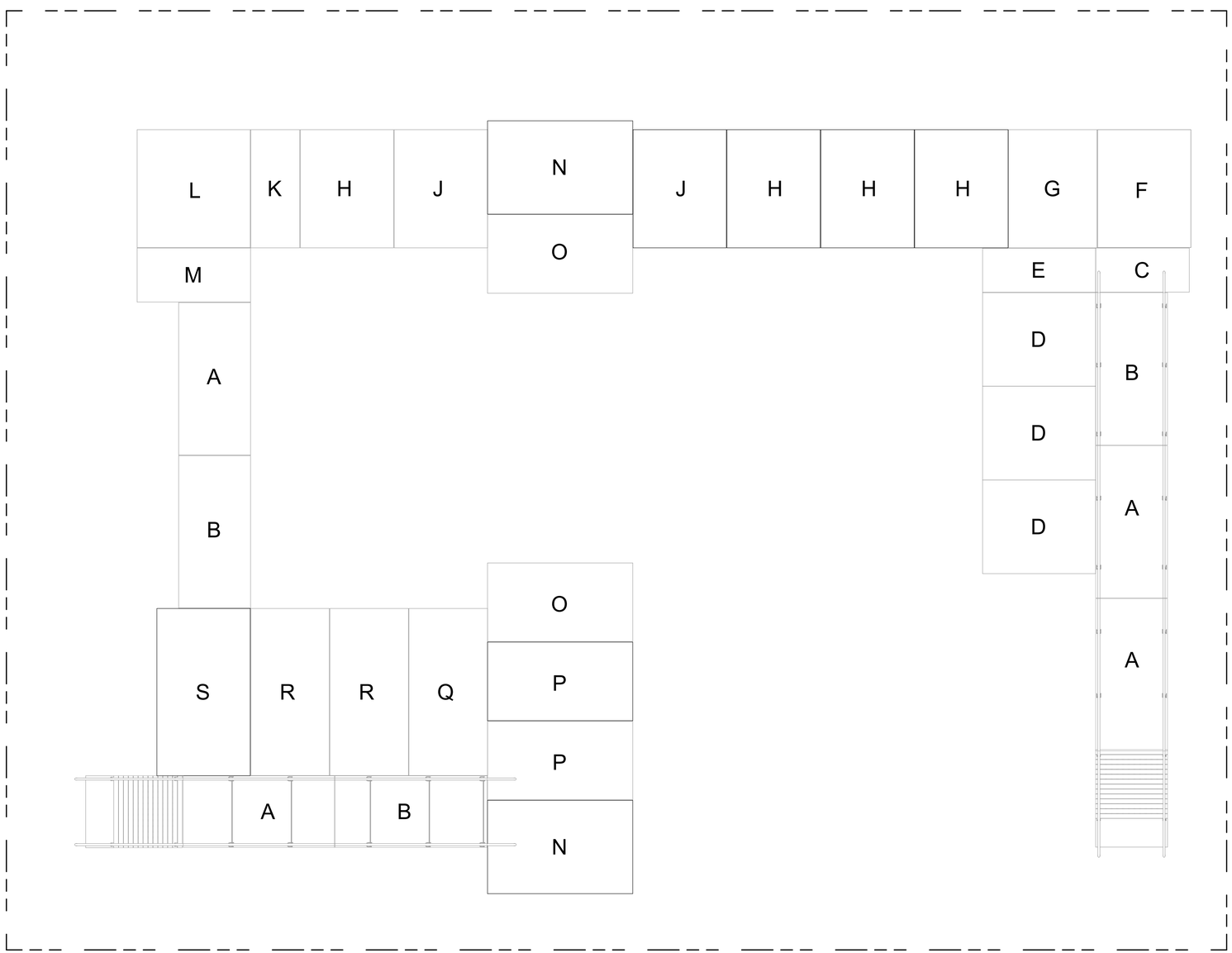

A1 DECK MODULE PLAN
1 : 48

0 2' 4' 8'

8/13/2011 8:39:29 AM

GENERAL SHEET NOTES

REFERENCE KEYNOTES

SHEET KEYNOTES

FIRST LIGHT NZ

TEAM NAME:	FIRSTLIGHT NZ
ADDRESS:	139 VIVIAN STREET TE ARO, WELLINGTON NEWZEALAND
CONTACT:	INFO@FIRSTLIGHTHOUSE.AC.NZ WWW.FIRSTLIGHTHOUSE.AC.NZ

CONSULTANTS

TENNENT + BROWN ARCHITECTS
DUNNING THORNTON CONSULTANTS LTD
LEAP AUSTRALASIA LTD
SOUTHERN PERSPECTIVES / SOLAR CITY

CLIENT

U.S. DEPARTMENT OF ENERGY
SOLAR DECATHLON 2011
WWW.SOLARDECATHLON.GOV

U.S. DEPARTMENT OF ENERGY SOLAR DECATHLON

MARK	DATE	DESCRIPTION
CN	11-01-11	FOR CONSTRUCTION

LOT NUMBER:	LOT NUMBER
DRAWN BY:	Author
CHECKED BY:	Checker
COPYRIGHT:	VICTORIA UNIVERSITY

SHEET TITLE

DECK MODULE LAYOUT PLAN

L-130

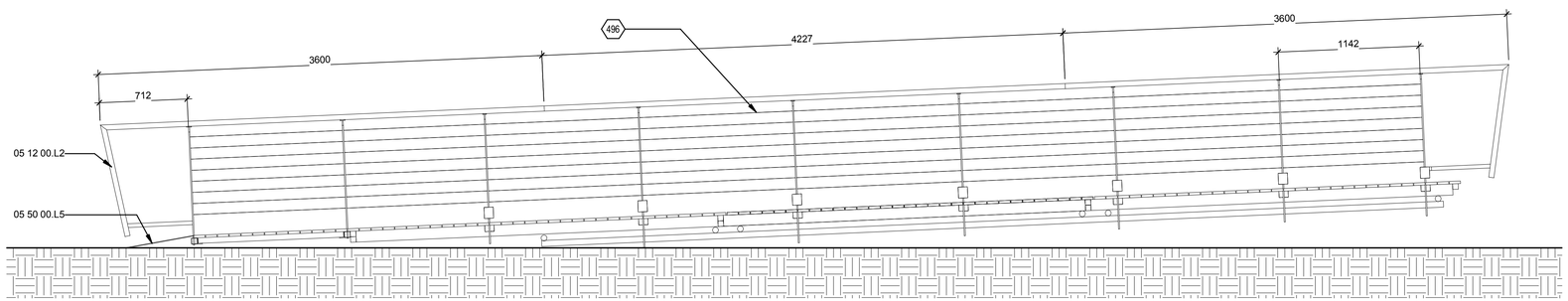

1 EASTERN RAMP ELEVATION
1 : 24

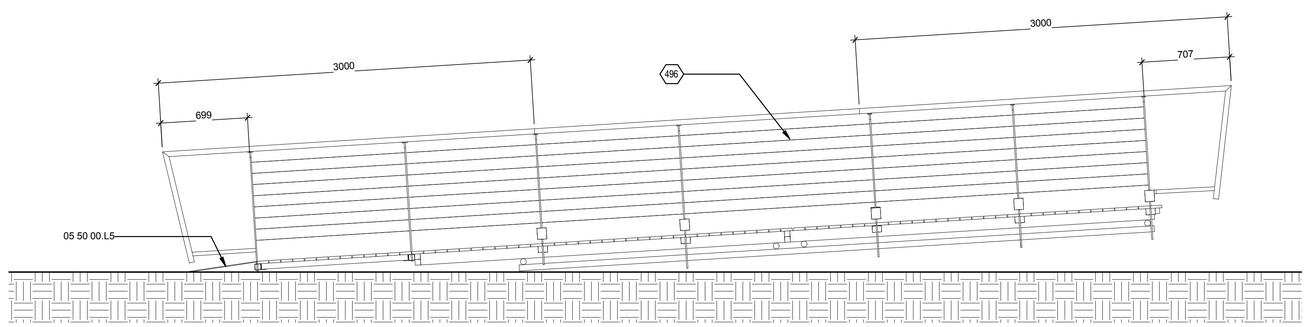

A2 SOUTHERN RAMP ELEVATION
1 : 24

GENERAL SHEET NOTES

REFERENCE KEYNOTES

05 12 00.L2	30X30X3MM UA STEEL SCREEN FRAME
05 50 00.L5	CHEQUERPLATE TO ENDS OF RAMP

SHEET KEYNOTES

496	HIGH TENSILE STEEL WIRE AT 90MM CENTRES. TIGHTENED TO WITHSTAND HORIZONTAL 50LB PER SQ FOOT FORCE

FIRST LIGHT NZ

TEAM NAME:	FIRSTLIGHT NZ
ADDRESS:	139 VIVIAN STREET TE ARO, WELLINGTON NEWZEALAND
CONTACT:	INFO@FIRSTLIGHTHOUSE.AC.NZ WWW.FIRSTLIGHTHOUSE.AC.NZ

CONSULTANTS

TENNENT + BROWN ARCHITECTS
DUNNING THORNTON CONSULTANTS LTD
LEAP AUSTRALASIA LTD
SOUTHERN PERSPECTIVES / SOLAR CITY

CLIENT

U.S. DEPARTMENT OF ENERGY
SOLAR DECATHLON 2011
WWW.SOLARDECATHLON.GOV

U.S. DEPARTMENT OF ENERGY SOLAR DECATHLON

MARK	DATE	DESCRIPTION
CN	11-01-11	FOR CONSTRUCTION

LOT NUMBER:	LOT NUMBER
DRAWN BY:	Author
CHECKED BY:	Checker
COPYRIGHT:	VICTORIA UNIVERSITY

SHEET TITLE

RAMP ELEVATIONS

L-201

8/13/2011 8:39:33 AM

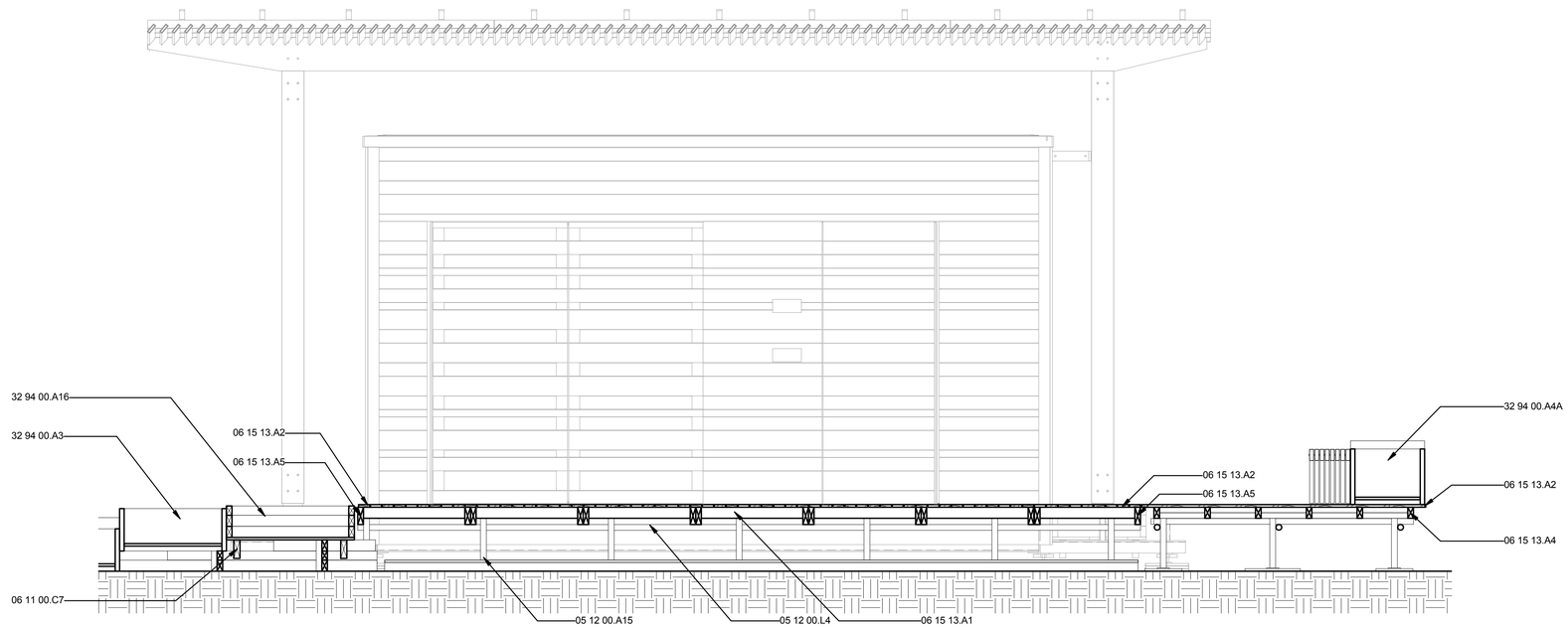

A1 UTILITY DECK SECTION
1 : 24

8/13/2011 8:39:37 AM

GENERAL SHEET NOTES

REFERENCE KEYNOTES

05 12 00.A15	300X300MM STEEL DECK SCAFFOLD FOOTING
05 12 00.L4	48MM STANDARD SCAFFOLD POLE
06 11 00.C7	240X45MM TIMBER TOP PLATE
06 15 13.A1	90X45MM BLOCKING TIMBER
06 15 13.A2	90X21MM DECKING TIMBER
06 15 13.A4	90X45MM TIMBER JOISTS
06 15 13.A5	140X45MM TIMBER JOIST
32 94 00.A3	COASTAL PLANTER TYPE 3 - 864L X 864W X 344H MM
32 94 00.A4A	TYPICAL PLANTER TYPE 4A - 1696L X 600W X 430H MM
32 94 00.A16	INNER PLANTER BOX

SHEET KEYNOTES

FIRST LIGHT NZ

TEAM NAME: FIRSTLIGHT NZ
ADDRESS: 139 VIVIAN STREET
TE ARO, WELLINGTON
NEWZEALAND
CONTACT: INFO@FIRSTLIGHTHOUSE.AC.NZ
WWW.FIRSTLIGHTHOUSE.AC.NZ

CONSULTANTS

TENNENT + BROWN ARCHITECTS
DUNNING THORNTON CONSULTANTS LTD
LEAP AUSTRALASIA LTD
SOUTHERN PERSPECTIVES / SOLAR CITY

CLIENT

U.S. DEPARTMENT OF ENERGY
SOLAR DECATHLON 2011
WWW.SOLARDECATHLON.GOV

U.S. DEPARTMENT OF ENERGY SOLAR DECATHLON

MARK	DATE	DESCRIPTION
CN	11-01-11	FOR CONSTRUCTION

LOT NUMBER:	LOT NUMBER
DRAWN BY:	Author
CHECKED BY:	Checker
COPYRIGHT:	VICTORIA UNIVERSITY

SHEET TITLE

UTILITY DECK SECTION

L-301

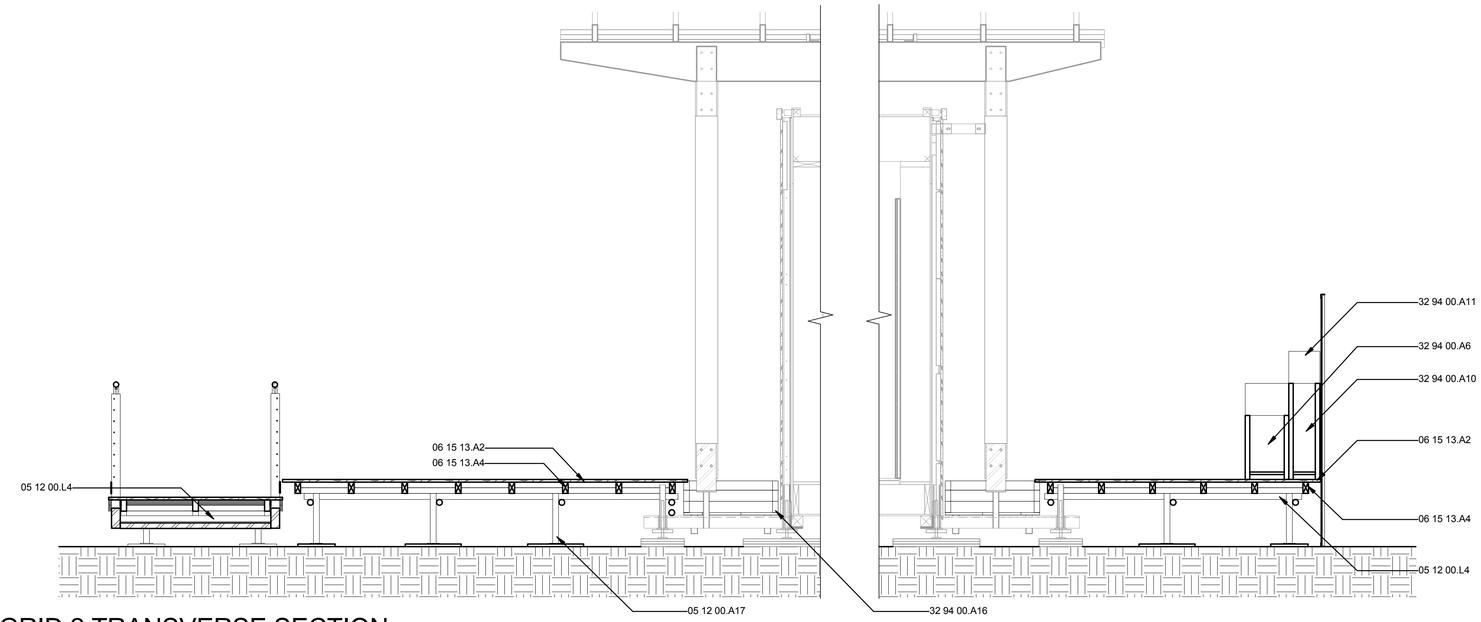

C1 LANDSCAPE GRID 2 TRANSVERSE SECTION
1 : 24

0 1' 2' 4'

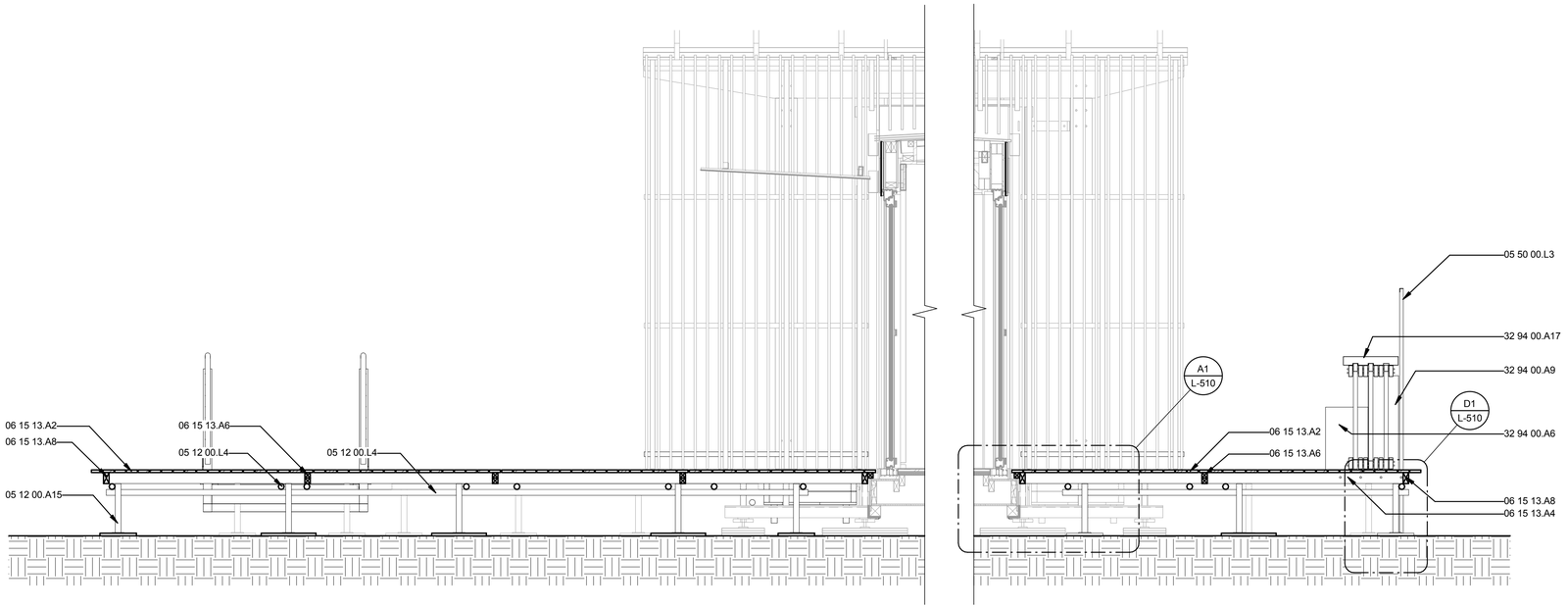

A1 CENTRE MODULE SECTION
1 : 24

0 1' 2' 4'

GENERAL SHEET NOTES

REFERENCE KEYNOTES

05 12 00.A15	300X300MM STEEL DECK SCAFFOLD FOOTING
05 12 00.A17	450X450MM STEEL DECK SCAFFOLD FOOTING
05 12 00.L4	48MM STANDARD SCAFFOLD POLE
05 50 00.L3	LANDSCAPE SCREEN TYPE 3 - NUMBER NEEDED 2
06 15 13.A2	90X21MM DECKING TIMBER
06 15 13.A4	90X45MM TIMBER JOISTS
06 15 13.A6	45X45MM TIMBER HALF JOIST
06 15 13.A8	90X45MM TIMBER END JOIST
32 94 00.A6	TYPICAL PLANTER TYPE 6 - 1184L X 350W X 516H MM
32 94 00.A9	TYPICAL PLANTER TYPE 9 - 1018L X 250W X 774H MM
32 94 00.A10	TYPICAL PLANTER TYPE 10 - 864L X 250W X 774H MM
32 94 00.A11	TYPICAL PLANTER TYPE 11 - 1184L X 250W X 1032H MM
32 94 00.A16	INNER PLANTER BOX
32 94 00.A17	CONCRETE BENCH

SHEET KEYNOTES

FIRST LIGHT NZ

TEAM NAME: FIRSTLIGHT NZ
ADDRESS: 139 VIVIAN STREET TE ARO, WELLINGTON NEWZEALAND
CONTACT: INFO@FIRSTLIGHTHOUSE.AC.NZ WWW.FIRSTLIGHTHOUSE.AC.NZ

CONSULTANTS

TENNENT + BROWN ARCHITECTS
DUNNING THORNTON CONSULTANTS LTD
LEAP AUSTRALASIA LTD
SOUTHERN PERSPECTIVES / SOLAR CITY

CLIENT
U.S. DEPARTMENT OF ENERGY
SOLAR DECATHLON 2011
WWW.SOLARDECATHLON.GOV

U.S. DEPARTMENT OF ENERGY SOLAR DECATHLON

MARK	DATE	DESCRIPTION
CN	11-01-11	FOR CONSTRUCTION

LOT NUMBER:	LOT NUMBER
DRAWN BY:	Author
CHECKED BY:	Checker
COPYRIGHT:	VICTORIA UNIVERSITY

SHEET TITLE
LANDSCAPE TRANSVERSE SECTIONS

L-302

8/13/2011 8:39:45 AM

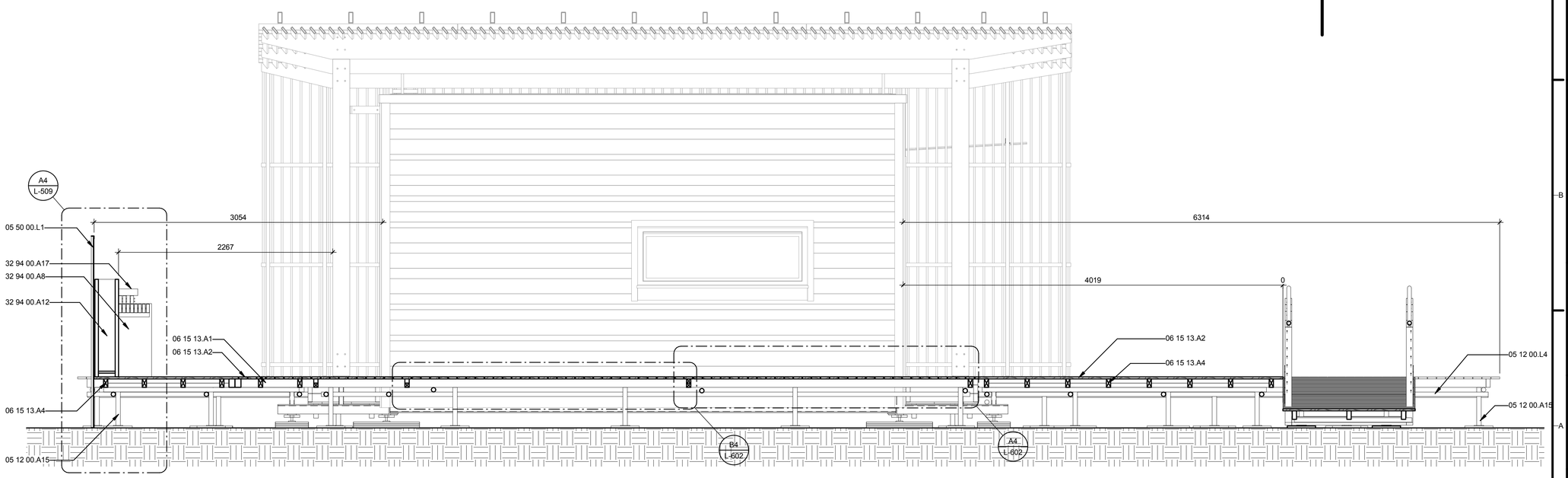

1 WEST DECK TRANSVERSE SECTION

1 : 24

GENERAL SHEET NOTES

REFERENCE KEYNOTES

05 12 00.A15	300X300MM STEEL DECK SCAFFOLD FOOTING
05 12 00.L4	48MM STANDARD SCAFFOLD POLE
05 50 00.L1	LANDSCAPE SCREEN TYPE 1 - NUMBER NEEDED 2
06 15 13.A1	90X45MM BLOCKING TIMBER
06 15 13.A2	90X21MM DECKING TIMBER
06 15 13.A4	90X45MM TIMBER JOISTS
32 94 00.A8	TYPICAL PLANTER TYPE 8 - 1184L X 350W X 774H MM
32 94 00.A12	TYPICAL PLANTER TYPE 12 - 1696L X 250W X 1032H MM
32 94 00.A17	CONCRETE BENCH

SHEET KEYNOTES

FIRST LIGHT NZ

TEAM NAME:	FIRSTLIGHT NZ
ADDRESS:	139 VIVIAN STREET TE ARO, WELLINGTON NEWZEALAND
CONTACT:	INFO@FIRSTLIGHTHOUSE.AC.NZ WWW.FIRSTLIGHTHOUSE.AC.NZ

CONSULTANTS

TENNENT + BROWN ARCHITECTS

DUNNING THORNTON CONSULTANTS LTD

LEAP AUSTRALASIA LTD

SOUTHERN PERSPECTIVES / SOLAR CITY

CLIENT

U.S. DEPARTMENT OF ENERGY

SOLAR DECATHLON 2011

WWW.SOLARDECATHLON.GOV

U.S. DEPARTMENT OF ENERGY SOLAR DECATHLON

MARK	DATE	DESCRIPTION
CN	11-01-11	FOR CONSTRUCTION

LOT NUMBER:	LOT NUMBER
DRAWN BY:	Author
CHECKED BY:	Checker
COPYRIGHT:	VICTORIA UNIVERSITY

SHEET TITLE

LANDSCAPE TRANVSERSE SECTIONS

L-303

8/13/2011 8:39:52 AM

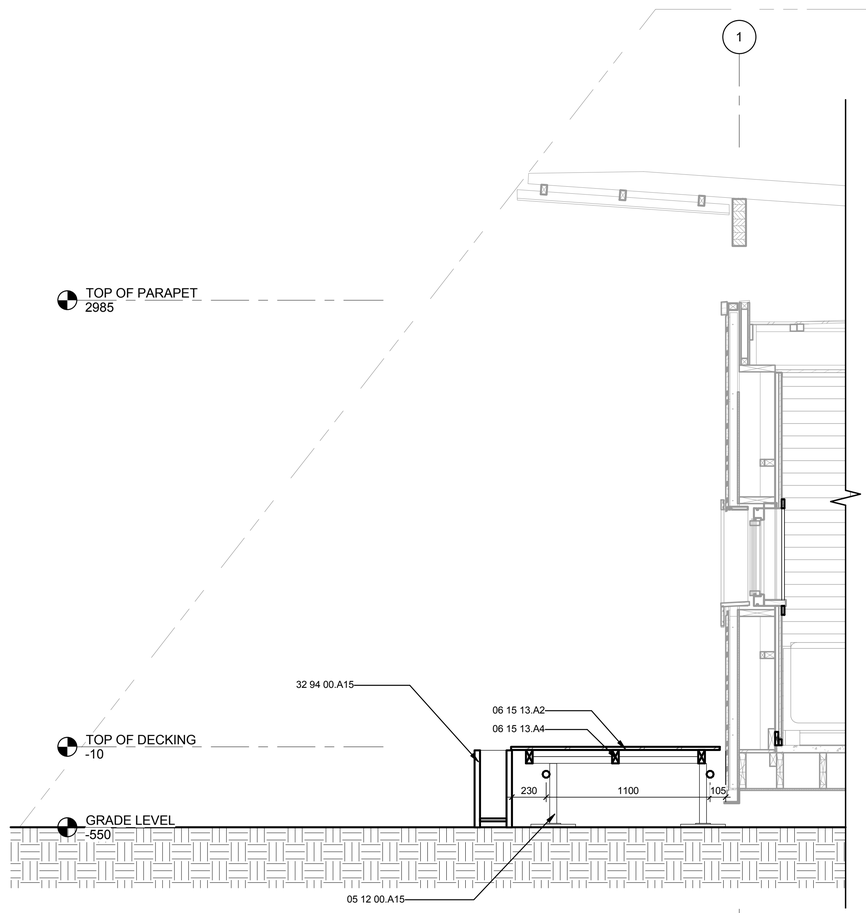

A3 WEST DECK SECTION
1 : 20

GENERAL SHEET NOTES

REFERENCE KEYNOTES

05 12 00.A15	300X300MM STEEL DECK SCAFFOLD FOOTING
05 12 00.L4	48MM STANDARD SCAFFOLD POLE
06 15 13.A2	90X21MM DECKING TIMBER
06 15 13.A4	90X45MM TIMBER JOISTS
32 94 00.A15	TYPICAL PLANTER TYPE 15 - 1696L X 350W X 516H MM

SHEET KEYNOTES

FIRST LIGHT NZ

TEAM NAME:	FIRSTLIGHT NZ
ADDRESS:	139 VIVIAN STREET TE ARO, WELLINGTON NEWZEALAND
CONTACT:	INFO@FIRSTLIGHTHOUSE.AC.NZ WWW.FIRSTLIGHTHOUSE.AC.NZ

CONSULTANTS

TENNENT + BROWN ARCHITECTS
DUNNING THORNTON CONSULTANTS LTD
LEAP AUSTRALASIA LTD
SOUTHERN PERSPECTIVES / SOLAR CITY

CLIENT
U.S. DEPARTMENT OF ENERGY
SOLAR DECATHLON 2011
WWW.SOLARDECATHLON.GOV

U.S. DEPARTMENT OF ENERGY SOLAR DECATHLON

MARK	DATE	DESCRIPTION
CN	11-01-11	FOR CONSTRUCTION

LOT NUMBER:	LOT NUMBER
DRAWN BY:	Author
CHECKED BY:	Checker
COPYRIGHT:	VICTORIA UNIVERSITY

SHEET TITLE
WEST DECK SECTION

L-304

8/13/2011 8:39:56 AM

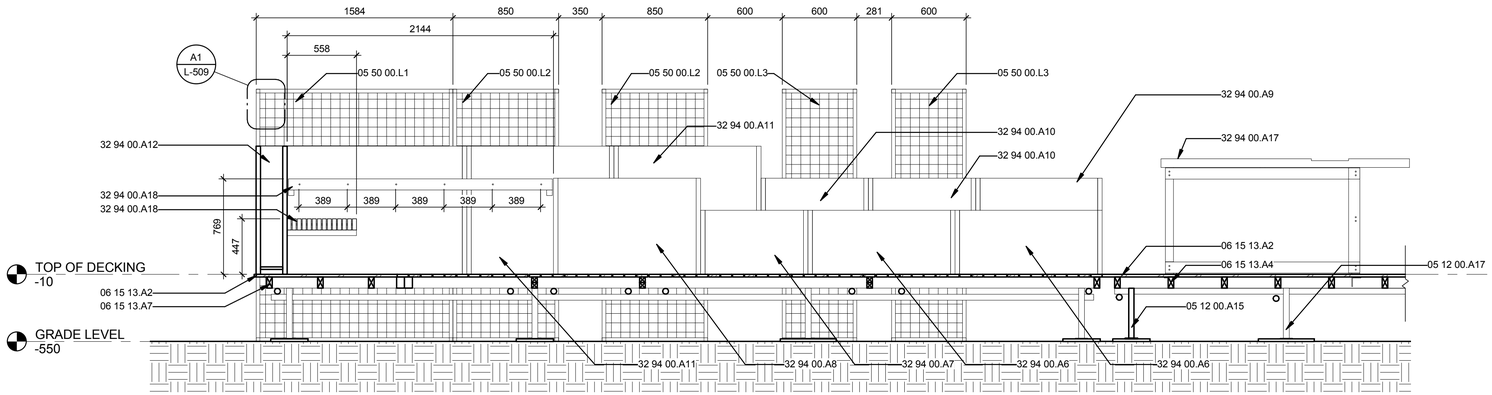

C2 NORTH WEST DECK SECTION

1 : 24

0 1' 2' 4'

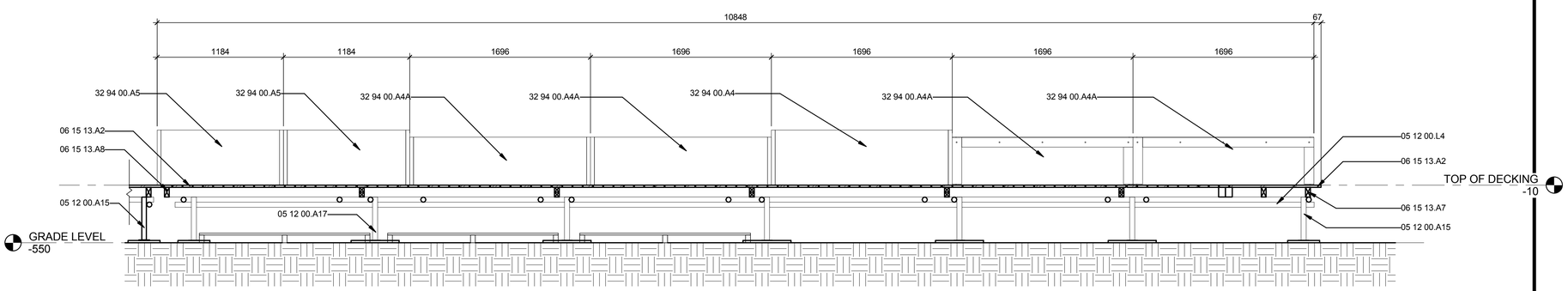

A1 NORTH EAST DECK SECTION

1 : 24

0 1' 2' 4'

GENERAL SHEET NOTES

REFERENCE KEYNOTES

05 12 00.A15	300X300MM STEEL DECK SCAFFOLD FOOTING
05 12 00.A17	450X450MM STEEL DECK SCAFFOLD FOOTING
05 12 00.L4	48MM STANDARD SCAFFOLD POLE
05 50 00.L1	LANDSCAPE SCREEN TYPE 1 - NUMBER NEEDED 2
05 50 00.L2	LANDSCAPE SCREEN TYPE 2 - NUMBER NEEDED 3
05 50 00.L3	LANDSCAPE SCREEN TYPE 3 - NUMBER NEEDED 2
06 15 13.A2	90X21MM DECKING TIMBER
06 15 13.A4	90X45MM TIMBER JOISTS
06 15 13.A7	90X45MM TRIMMING JOIST
06 15 13.A8	90X45MM TIMBER END JOIST
32 94 00.A4	TYPICAL PLANTER TYPE 4 - 1696L X 600W X 516H MM
32 94 00.A4A	TYPICAL PLANTER TYPE 4A - 1696L X 600W X 430H MM
32 94 00.A5	TYPICAL PLANTER TYPE 5 - 1184L X 600W X 516H MM
32 94 00.A6	TYPICAL PLANTER TYPE 6 - 1184L X 350W X 516H MM
32 94 00.A7	TYPICAL PLANTER TYPE 7 - 864L X 350W X 516H MM
32 94 00.A8	TYPICAL PLANTER TYPE 8 - 1184L X 350W X 774H MM
32 94 00.A9	TYPICAL PLANTER TYPE 9 - 1018L X 250W X 774H MM
32 94 00.A10	TYPICAL PLANTER TYPE 10 - 864L X 250W X 774H MM
32 94 00.A11	TYPICAL PLANTER TYPE 11 - 1184L X 250W X 1032H MM
32 94 00.A12	TYPICAL PLANTER TYPE 12 - 1696L X 250W X 1032H MM
32 94 00.A17	CONCRETE BENCH
32 94 00.A18	TIMBER SEAT FIXED TO PLANTERS

SHEET KEYNOTES

FIRST LIGHT NZ

TEAM NAME:	FIRSTLIGHT NZ
ADDRESS:	139 VIVIAN STREET TE ARO, WELLINGTON NEWZEALAND
CONTACT:	INFO@FIRSTLIGHTHOUSE.AC.NZ WWW.FIRSTLIGHTHOUSE.AC.NZ

CONSULTANTS

TENNENT + BROWN ARCHITECTS

DUNNING THORNTON CONSULTANTS LTD

LEAP AUSTRALASIA LTD

SOUTHERN PERSPECTIVES / SOLAR CITY

CLIENT

U.S. DEPARTMENT OF ENERGY

SOLAR DECATHLON 2011

WWW.SOLARDECATHLON.GOV

U.S. DEPARTMENT OF ENERGY SOLAR DECATHLON

MARK	DATE	DESCRIPTION
CN	11-01-11	FOR CONSTRUCTION

LOT NUMBER:	LOT NUMBER
DRAWN BY:	Author
CHECKED BY:	Checker
COPYRIGHT:	VICTORIA UNIVERSITY

SHEET TITLE

NORTH DECK SECTIONS

L-305

8/13/2011 8:40:00 AM

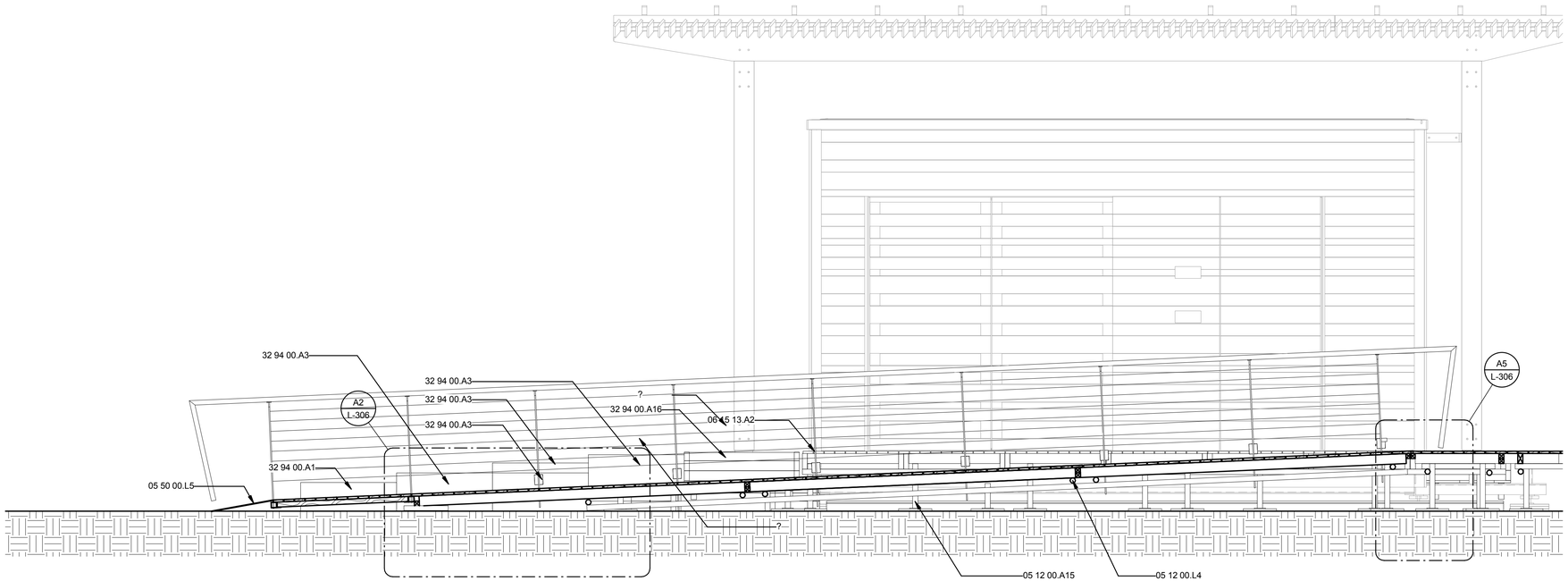

C1 1 IN 20 RAMP SECTION
1 : 24

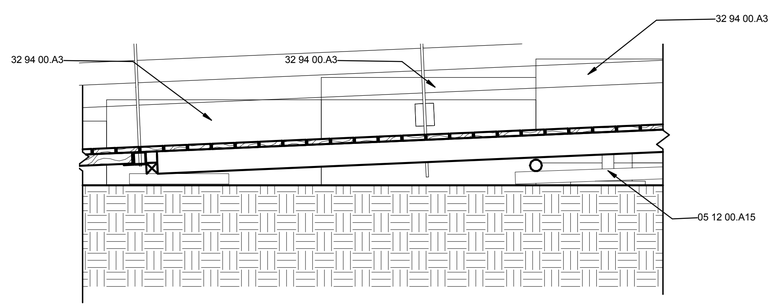

A2 1 IN 20 RAMP END SUPPORT DETAIL
1 : 12

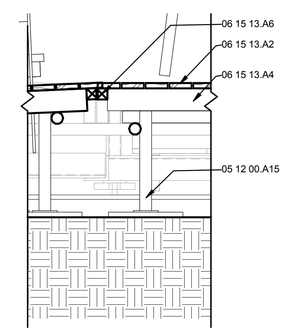

A5 1 IN 20 RAMP TO DECK SECTION
1 : 12

GENERAL SHEET NOTES

REFERENCE KEYNOTES

05 12 00.A15	300X300MM STEEL DECK SCAFFOLD FOOTING
05 12 00.A17	450X450MM STEEL DECK SCAFFOLD FOOTING
05 12 00.L4	48MM STANDARD SCAFFOLD POLE
05 50 00.L5	CHEQUERPLATE TO ENDS OF RAMP
06 15 13.A2	90X21MM DECKING TIMBER
06 15 13.A4	90X45MM TIMBER JOISTS
06 15 13.A6	45X45MM TIMBER HALF JOIST
32 94 00.A1	COASTAL PLANTER TYPE 1 - 864L X 864W X 258H MM
32 94 00.A3	COASTAL PLANTER TYPE 3 - 864L X 864W X 344H MM
32 94 00.A16	INNER PLANTER BOX

SHEET KEYNOTES

FIRST LIGHT NZ

TEAM NAME:	FIRSTLIGHT NZ
ADDRESS:	139 VIVIAN STREET TE ARO, WELLINGTON NEWZEALAND
CONTACT:	INFO@FIRSTLIGHTHOUSE.AC.NZ WWW.FIRSTLIGHTHOUSE.AC.NZ

CONSULTANTS

TENNENT + BROWN ARCHITECTS
DUNNING THORNTON CONSULTANTS LTD
LEAP AUSTRALASIA LTD
SOUTHERN PERSPECTIVES / SOLAR CITY

CLIENT

U.S. DEPARTMENT OF ENERGY
SOLAR DECATHLON 2011
WWW.SOLARDECATHLON.GOV

U.S. DEPARTMENT OF ENERGY SOLAR DECATHLON

MARK	DATE	DESCRIPTION
CN	11-01-11	FOR CONSTRUCTION

LOT NUMBER:	LOT NUMBER
DRAWN BY:	Author
CHECKED BY:	Checker
COPYRIGHT:	VICTORIA UNIVERSITY

SHEET TITLE

LONGITUDINAL RAMP SECTION

L-306

8/13/2011 8:40:05 AM

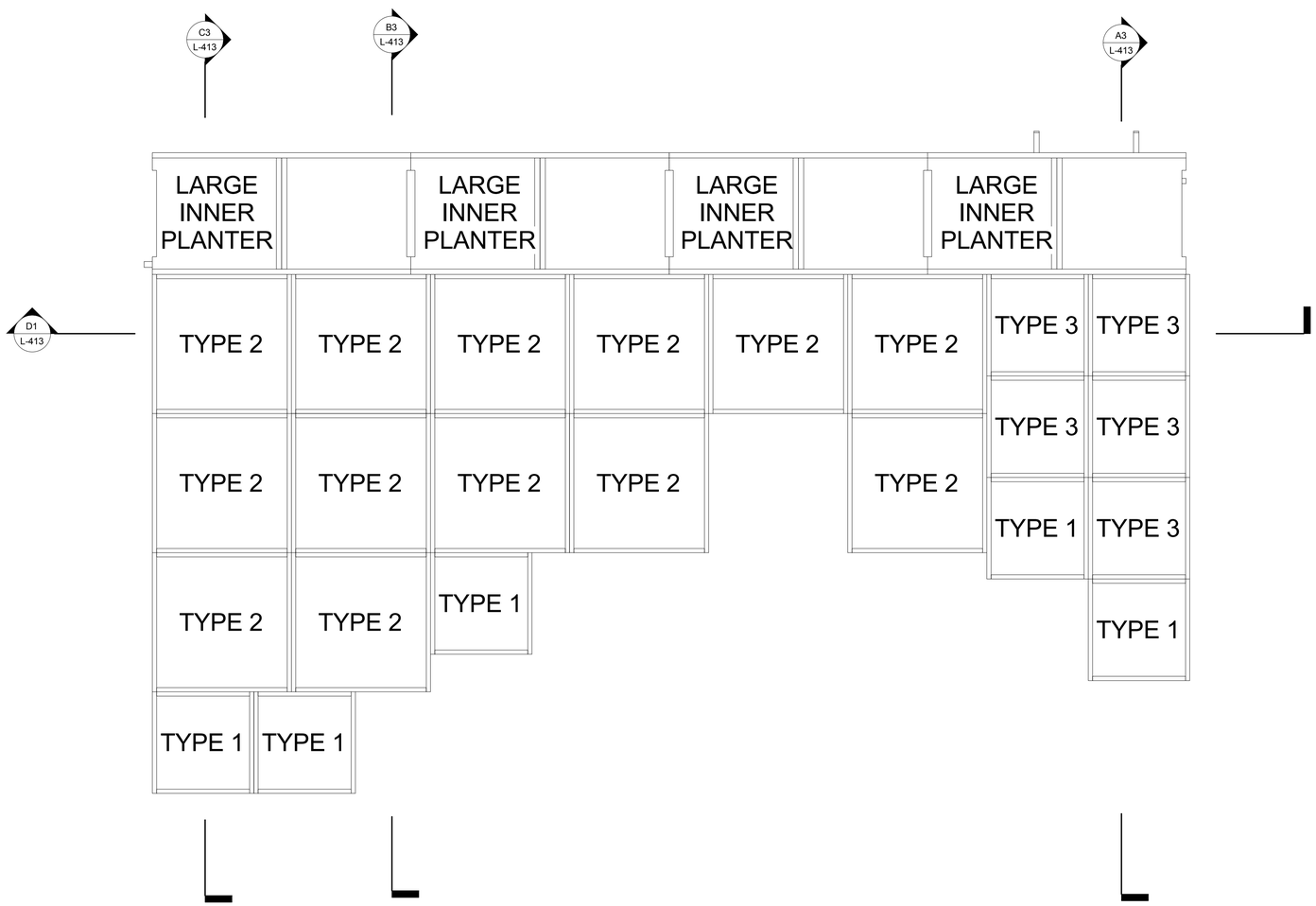

A2 COASTAL PLANTER SYSTEM PLAN
1 : 24

0 1' 2' 4'

GENERAL SHEET NOTES

REFERENCE KEYNOTES

SHEET KEYNOTES

FIRST LIGHT NZ

TEAM NAME:	FIRSTLIGHT NZ
ADDRESS:	139 VIVIAN STREET TE ARO, WELLINGTON NEWZEALAND
CONTACT:	INFO@FIRSTLIGHTHOUSE.AC.NZ WWW.FIRSTLIGHTHOUSE.AC.NZ

CONSULTANTS

TENNENT + BROWN ARCHITECTS
DUNNING THORNTON CONSULTANTS LTD
LEAP AUSTRALASIA LTD
SOUTHERN PERSPECTIVES / SOLAR CITY

CLIENT
U.S. DEPARTMENT OF ENERGY
SOLAR DECATHLON 2011
WWW.SOLARDECATHLON.GOV

U.S. DEPARTMENT OF ENERGY SOLAR DECATHLON

MARK	DATE	DESCRIPTION
CN	11-01-11	FOR CONSTRUCTION

LOT NUMBER:	LOT NUMBER
DRAWN BY:	Author
CHECKED BY:	Checker
COPYRIGHT:	VICTORIA UNIVERSITY

SHEET TITLE
COASTAL PLANTER SYSTEM PLAN

L-412

8/13/2011 8:40:09 AM

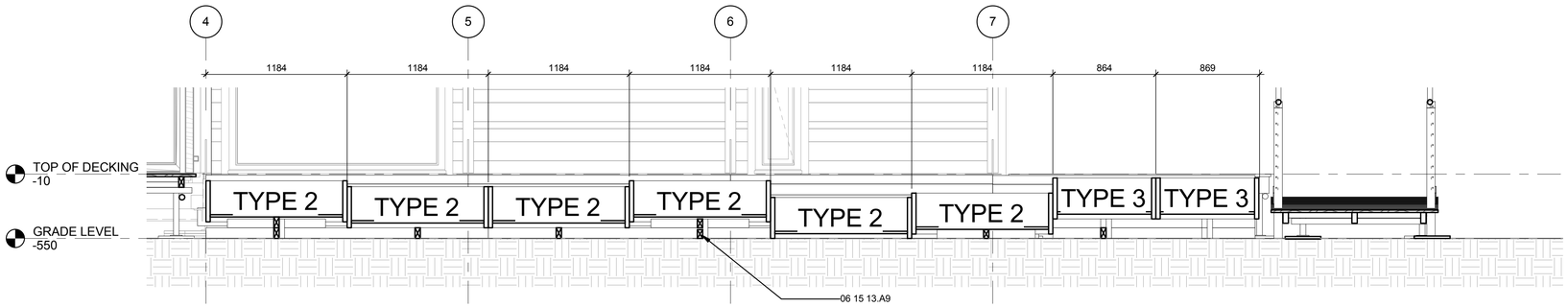

D1 COASTAL PLANTER LONGITUDINAL SECTION

1 : 24

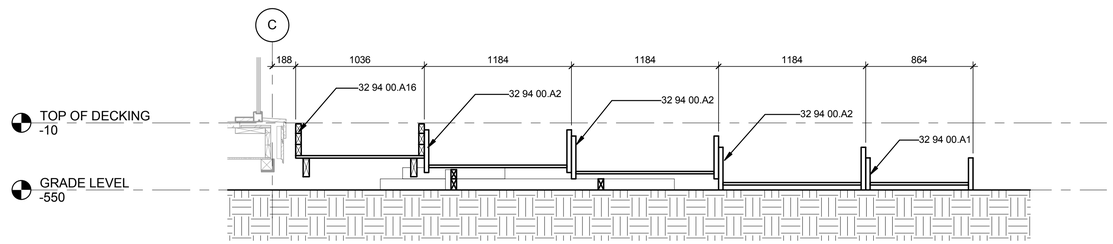

C3 COASTAL PLANTER SECTION 2

1 : 24

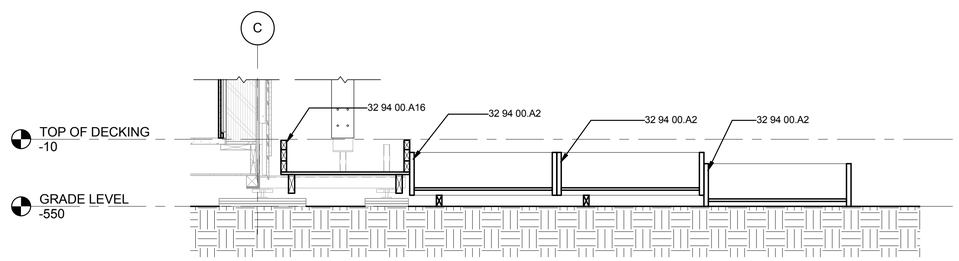

B3 COASTAL PLANTER SECTION 3

1 : 24

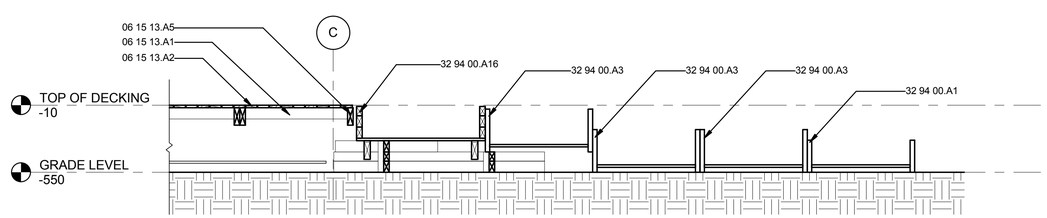

A3 COASTAL PLANTER SECTION 4

1 : 24

GENERAL SHEET NOTES

REFERENCE KEYNOTES

06 15 13.A1	90X45MM BLOCKING TIMBER
06 15 13.A2	90X21MM DECKING TIMBER
06 15 13.A5	140X45MM TIMBER JOIST
06 15 13.A9	75X45MM COASTAL PLANTER SUPPORT TIMBER
32 94 00.A1	COASTAL PLANTER TYPE 1 - 864L X 864W X 258H MM
32 94 00.A2	COASTAL PLANTER TYPE 2 - 1184L X 1184W X 344H MM
32 94 00.A3	COASTAL PLANTER TYPE 3 - 864L X 864W X 344H MM
32 94 00.A16	INNER PLANTER BOX

SHEET KEYNOTES

FIRST LIGHT NZ

TEAM NAME:	FIRSTLIGHT NZ
ADDRESS:	139 VIVIAN STREET TE ARO, WELLINGTON NEWZEALAND
CONTACT:	INFO@FIRSTLIGHTHOUSE.AC.NZ WWW.FIRSTLIGHTHOUSE.AC.NZ

CONSULTANTS

TENNENT + BROWN ARCHITECTS

DUNNING THORNTON CONSULTANTS LTD

LEAP AUSTRALASIA LTD

SOUTHERN PERSPECTIVES / SOLAR CITY

CLIENT

U.S. DEPARTMENT OF ENERGY

SOLAR DECATHLON 2011

WWW.SOLARDECATHLON.GOV

U.S. DEPARTMENT OF ENERGY SOLAR DECATHLON

MARK	DATE	DESCRIPTION
CN	11-01-11	FOR CONSTRUCTION

LOT NUMBER:	LOT NUMBER
DRAWN BY:	Author
CHECKED BY:	Checker
COPYRIGHT:	VICTORIA UNIVERSITY

SHEET TITLE

COASTAL PLANTER SECTIONS

L-413

8/13/2011 8:40:14 AM

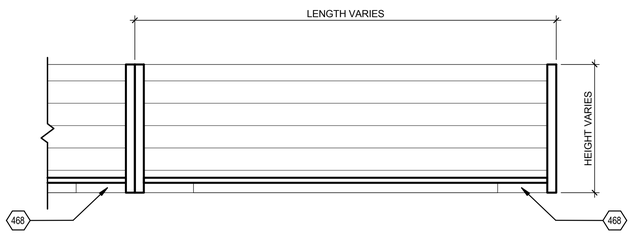

C1 TYPICAL PLANTER SECTION
1 : 12
0 1/2' 1' 2'

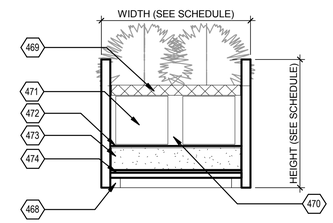

2 TYPICAL PLANTER CROSS SECTION
1 : 12
0 1/2' 1' 2'

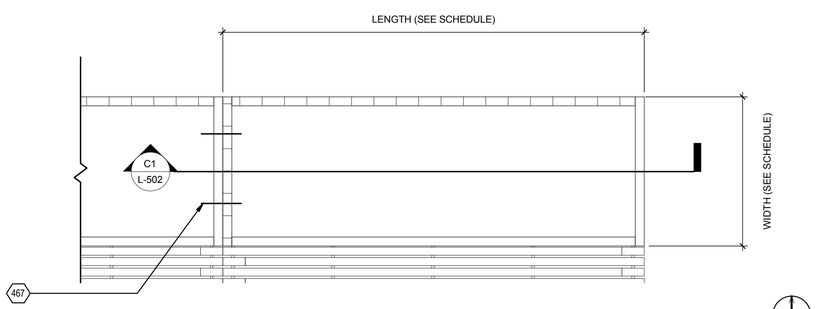

A1 TYPICAL PLANTER PLAN
1 : 12
0 1/2' 1' 2'

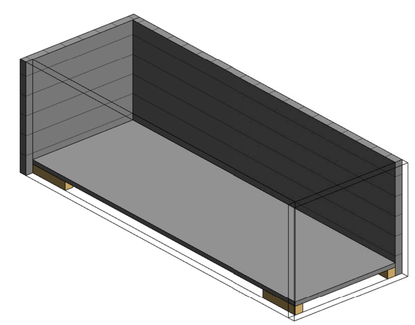

A5 TYPICAL PLANTER

GENERAL SHEET NOTES

REFERENCE KEYNOTES

SHEET KEYNOTES

467	SCREW FIX MODULES TOGETHER ON SITE
468	50 X50MM TIMBER BLOCKING SCREW FIXED TO TIMBER DECK, NOT FIXED TO PLANTER
469	30-50MM MULCH MATERIAL
470	POLYSTYRENE FILL AROUND PLANTS
471	PLANTS TO REMAIN IN GROW BAGS
472	STEEL MESH TO SUPPORT PLANT BAG
473	SPONGE TO SOAK AND HOLD EXCESS WATER
474	WATERPROOF MEMBRANE

FIRST LIGHT NZ

TEAM NAME:	FIRSTLIGHT NZ
ADDRESS:	139 VIVIAN STREET TE ARO, WELLINGTON NEWZEALAND
CONTACT:	INFO@FIRSTLIGHTHOUSE.AC.NZ WWW.FIRSTLIGHTHOUSE.AC.NZ

CONSULTANTS

TENNENT + BROWN ARCHITECTS
DUNNING THORNTON CONSULTANTS LTD
LEAP AUSTRALASIA LTD
SOUTHERN PERSPECTIVES / SOLAR CITY

CLIENT

U.S. DEPARTMENT OF ENERGY
SOLAR DECATHLON 2011
WWW.SOLARDECATHLON.GOV

U.S. DEPARTMENT OF ENERGY SOLAR DECATHLON

MARK	DATE	DESCRIPTION
CN	11-01-11	FOR CONSTRUCTION

LOT NUMBER:	LOT NUMBER
DRAWN BY:	Author
CHECKED BY:	Checker
COPYRIGHT:	VICTORIA UNIVERSITY

SHEET TITLE

TYPICAL PLANTER DETAILS

L-502

8/13/2011 8:40:24 AM

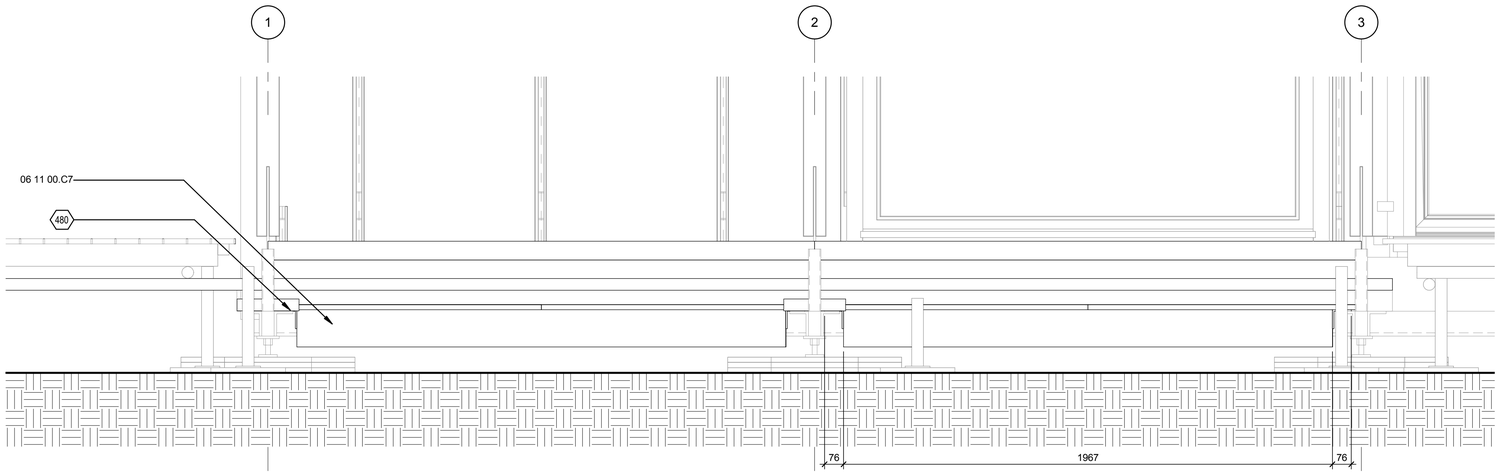

D1 INNER PLANTER ELEVATION
1 : 12

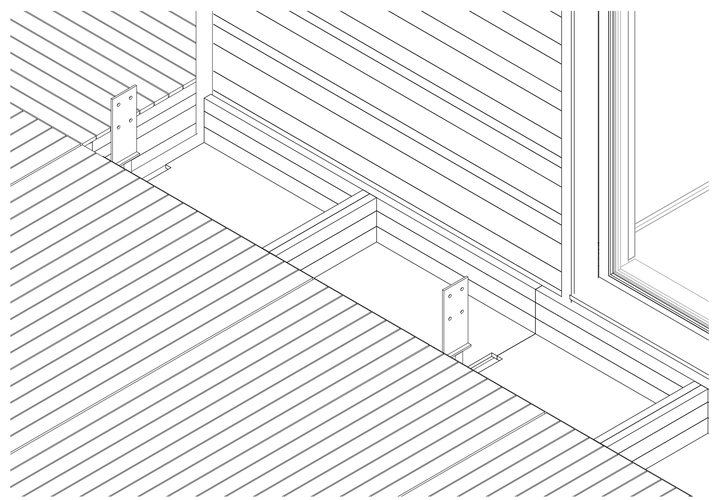

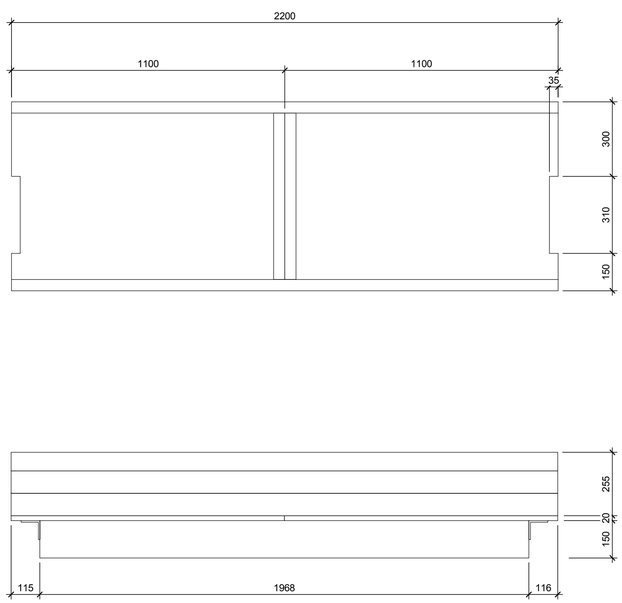

A1 INNER PLANTER DETAILS

GENERAL SHEET NOTES

REFERENCE KEYNOTES

06 11 00.C7	240X45MM TIMBER TOP PLATE

SHEET KEYNOTES

480	75X6MM STEEL ANGLE SCREW FIXED TO JOIST. REST ON FOUNDATION FRAME ANGLE

FIRST LIGHT NZ

TEAM NAME:	FIRSTLIGHT NZ
ADDRESS:	139 VIVIAN STREET TE ARO, WELLINGTON NEWZEALAND
CONTACT:	INFO@FIRSTLIGHTHOUSE.AC.NZ WWW.FIRSTLIGHTHOUSE.AC.NZ

CONSULTANTS

TENNENT + BROWN ARCHITECTS
DUNNING THORNTON CONSULTANTS LTD
LEAP AUSTRALASIA LTD
SOUTHERN PERSPECTIVES / SOLAR CITY

CLIENT

U.S. DEPARTMENT OF ENERGY
SOLAR DECATHLON 2011
WWW.SOLARDECATHLON.GOV

U.S. DEPARTMENT OF ENERGY SOLAR DECATHLON

MARK	DATE	DESCRIPTION
CN	11-01-11	FOR CONSTRUCTION

LOT NUMBER:	LOT NUMBER
DRAWN BY:	Author
CHECKED BY:	Checker
COPYRIGHT:	VICTORIA UNIVERSITY

SHEET TITLE

INNER PLANTER DETAILS

L-503

8/13/2011 8:40:29 AM

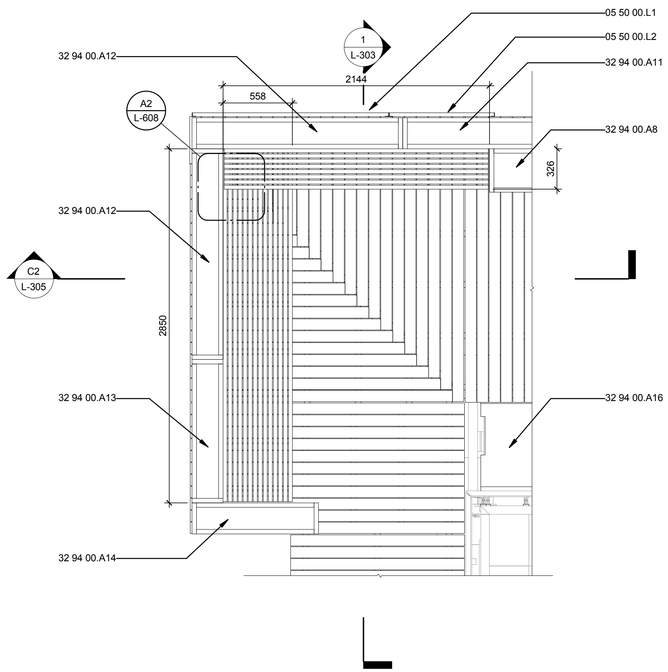

C1 NORTH WEST SEAT PLAN
1 : 24

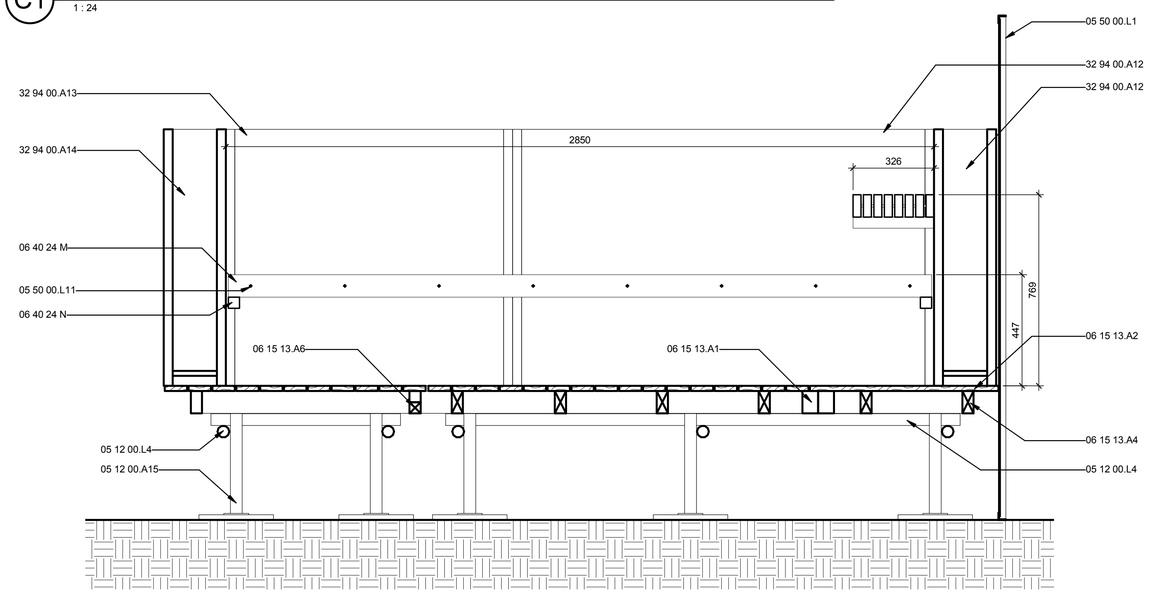

A1 NORTHWEST DECK SEAT LONGITUDINAL SECTION
1 : 12

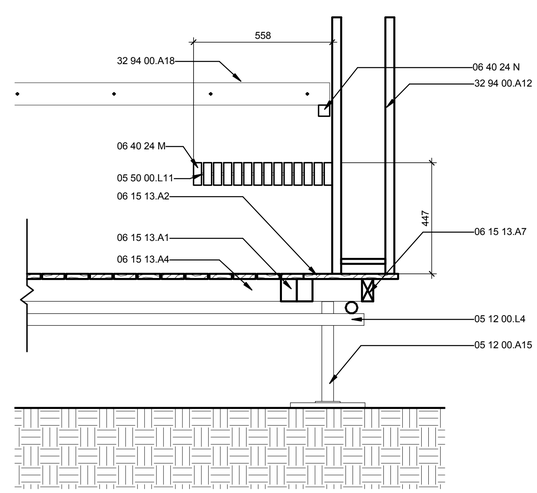

A5 NORTH WEST SEAT SECTION
1 : 12

GENERAL SHEET NOTES

REFERENCE KEYNOTES

05 12 00.A15	300X300MM STEEL DECK SCAFFOLD FOOTING
05 12 00.L4	48MM STANDARD SCAFFOLD POLE
05 50 00.L1	LANDSCAPE SCREEN TYPE 1 - NUMBER NEEDED 2
05 50 00.L2	LANDSCAPE SCREEN TYPE 2 - NUMBER NEEDED 3
05 50 00.L11	M10 STAINLESS STEEL THREADED ROD WITH STAINLESS STEEL WASHERS AND HEX NUTS EITHER END. RECESS FIXINGS.
06 15 13.A1	90X45MM BLOCKING TIMBER
06 15 13.A2	90X21MM DECKING TIMBER
06 15 13.A4	90X45MM TIMBER JOISTS
06 15 13.A6	45X45MM TIMBER HALF JOIST
06 15 13.A7	90X45MM TRIMMING JOIST
06 40 24 M	90 X 32MM TIMBER SEAT ELEMENTS, NOMINALLY AT 10MM SPACINGS
06 40 24 N	45 X 45MM TIMBER SEAT END RAIL FIXED TO PLANTERS
32 94 00.A8	TYPICAL PLANTER TYPE 8 - 1184L X 350W X 774H MM
32 94 00.A11	TYPICAL PLANTER TYPE 11 - 1184L X 250W X 1032H MM
32 94 00.A12	TYPICAL PLANTER TYPE 12 - 1696L X 250W X 1032H MM
32 94 00.A13	TYPICAL PLANTER TYPE 13 - 1154L X 250W X 1032H MM
32 94 00.A14	TYPICAL PLANTER TYPE 14 - 1018L X 250W X 1032H MM
32 94 00.A16	INNER PLANTER BOX
32 94 00.A18	TIMBER SEAT FIXED TO PLANTERS

SHEET KEYNOTES

FIRST LIGHT NZ

TEAM NAME:	FIRSTLIGHT NZ
ADDRESS:	139 VIVIAN STREET TE ARO, WELLINGTON NEWZEALAND
CONTACT:	INFO@FIRSTLIGHTHOUSE.AC.NZ WWW.FIRSTLIGHTHOUSE.AC.NZ

CONSULTANTS

TENNENT + BROWN ARCHITECTS
DUNNING THORNTON CONSULTANTS LTD
LEAP AUSTRALASIA LTD
SOUTHERN PERSPECTIVES / SOLAR CITY

CLIENT
U.S. DEPARTMENT OF ENERGY
SOLAR DECATHLON 2011
WWW.SOLARDECATHLON.GOV

U.S. DEPARTMENT OF ENERGY SOLAR DECATHLON

MARK	DATE	DESCRIPTION
CN	11-01-11	FOR CONSTRUCTION

LOT NUMBER:	LOT NUMBER
DRAWN BY:	Author
CHECKED BY:	Checker
COPYRIGHT:	VICTORIA UNIVERSITY

SHEET TITLE
NORTH WEST SEAT DETAILS

L-506

8/13/2011 8:40:34 AM

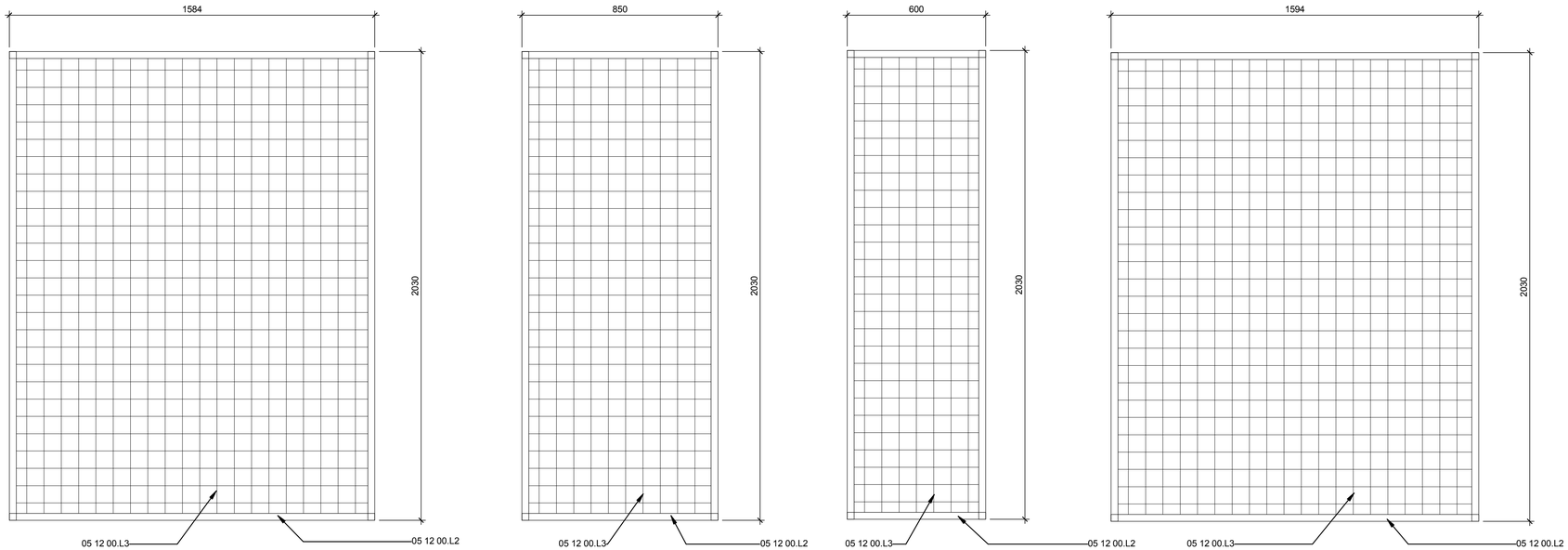

C1 SCREEN MODULE DETAILS

1 : 12

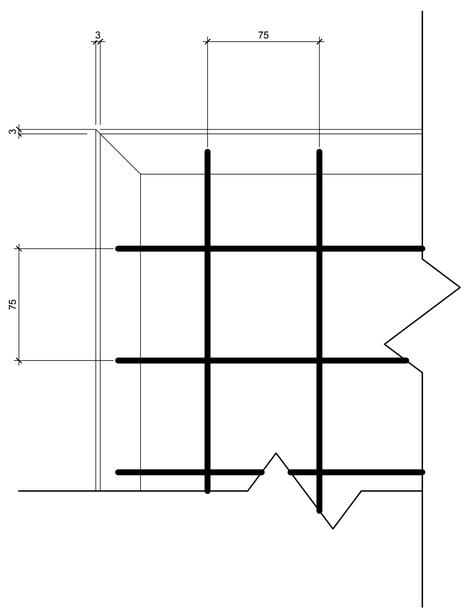

A1 STEEL SCREEN CORNER DETAIL

1 : 2

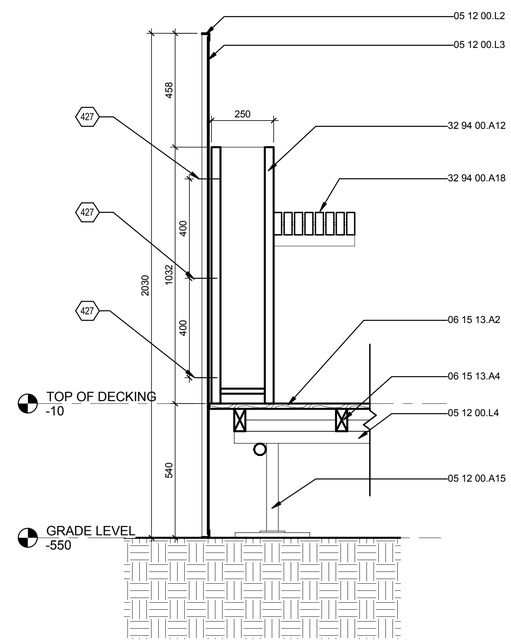

A4 STEEL SCREEN AND PLANTER SECTION DETAIL

1 : 12

GENERAL SHEET NOTES

REFERENCE KEYNOTES

05 12 00.A15	300X300MM STEEL DECK SCAFFOLD FOOTING
05 12 00.L2	30X30X3MM UA STEEL SCREEN FRAME
05 12 00.L3	75X75MM STEEL REINFORCING MESH
05 12 00.L4	48MM STANDARD SCAFFOLD POLE
06 15 13.A2	90X21MM DECKING TIMBER
06 15 13.A4	90X45MM TIMBER JOISTS
32 94 00.A8	TYPICAL PLANTER TYPE 8 - 1184L X 350W X 774H MM
32 94 00.A12	TYPICAL PLANTER TYPE 12 - 1696L X 250W X 1032H MM
32 94 00.A18	TIMBER SEAT FIXED TO PLANTERS

SHEET KEYNOTES

425	CORNER JOINT MITRED AND SEAM WELDED
426	STEEL MESH SPOT WELDED TO STEEL FRAME
427	SCREEN HUNG ON STEEL HOOKS SCREW FIXED TO PLANTERS - POSITIONED TO SUIT SITE LEVEL CHANGES

FIRST LIGHT NZ

TEAM NAME:	FIRSTLIGHT NZ
ADDRESS:	139 VIVIAN STREET TE ARO, WELLINGTON NEWZEALAND
CONTACT:	INFO@FIRSTLIGHTHOUSE.AC.NZ WWW.FIRSTLIGHTHOUSE.AC.NZ

CONSULTANTS

TENNENT + BROWN ARCHITECTS

DUNNING THORNTON CONSULTANTS LTD

LEAP AUSTRALASIA LTD

SOUTHERN PERSPECTIVES / SOLAR CITY

CLIENT

U.S. DEPARTMENT OF ENERGY

SOLAR DECATHLON 2011

WWW.SOLARDECATHLON.GOV

U.S. DEPARTMENT OF ENERGY SOLAR DECATHLON

MARK	DATE	DESCRIPTION
CN	11-01-11	FOR CONSTRUCTION

LOT NUMBER:	LOT NUMBER
DRAWN BY:	Author
CHECKED BY:	Checker
COPYRIGHT:	VICTORIA UNIVERSITY

SHEET TITLE

SCREEN DETAILS

L-509

8/13/2011 8:40:38 AM

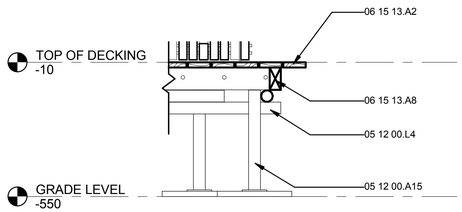

D1 DECK EDGE DETAIL TYPE 2
1 : 12

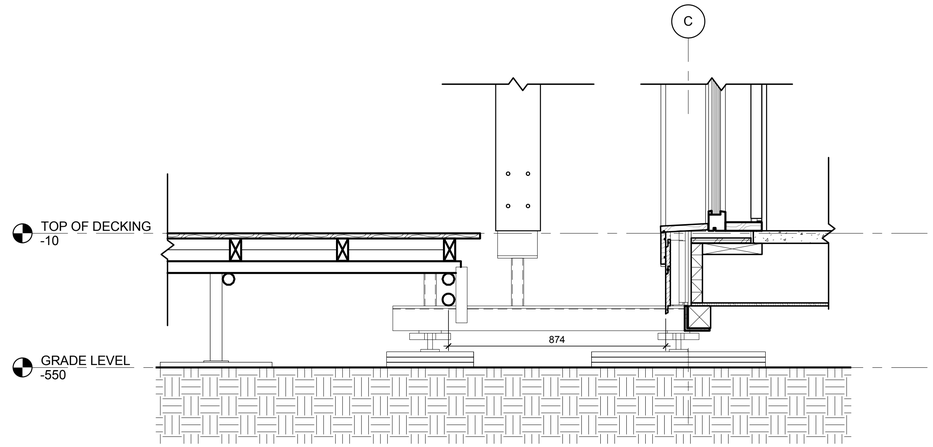

D3 SCAFFOLD CONNECTION TO FOUNDATION OUTRIGGER
1 : 12

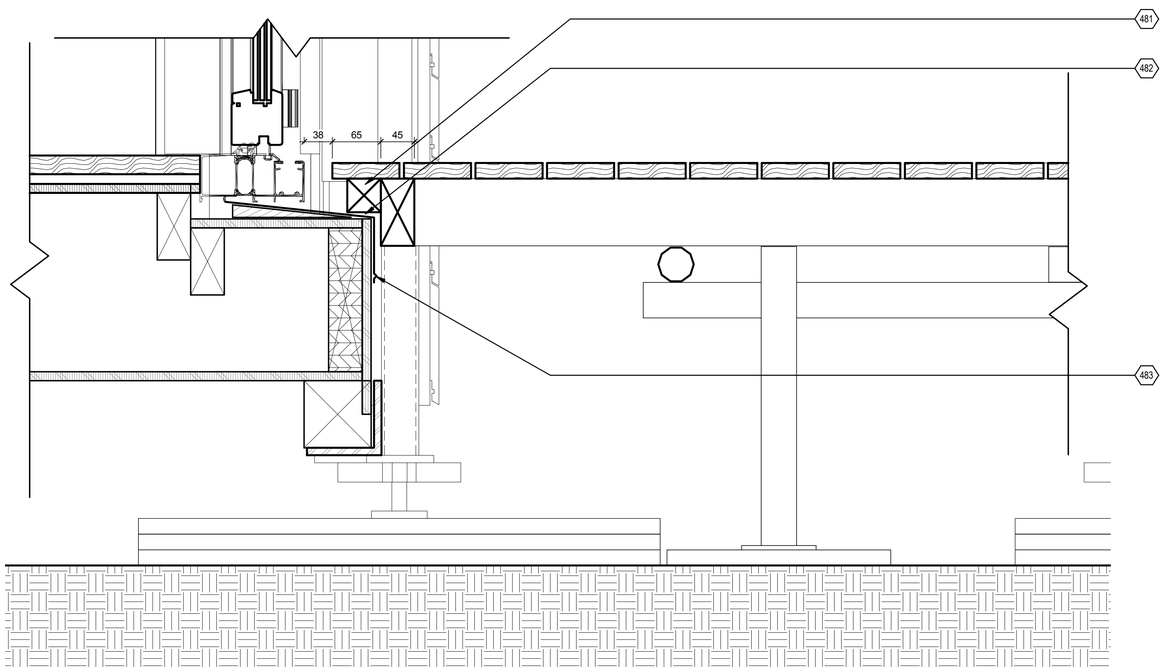

A1 DECK TO HOUSE CONNECTION DETAIL
1 : 4

GENERAL SHEET NOTES

REFERENCE KEYNOTES

05 12 00.A15	300X300MM STEEL DECK SCAFFOLD FOOTING
05 12 00.L4	48MM STANDARD SCAFFOLD POLE
06 15 13.A2	90X21MM DECKING TIMBER
06 15 13.A8	90X45MM TIMBER END JOIST

SHEET KEYNOTES

481	PLANE HALF JOIST ON SITE TO SIT ON SILL
482	5-7MM PACKER (100-150MM LONG) UNDER HALF JOIST AT 450MM CENTRES.
483	DO NOT FIX THROUGH FLASHING

FIRST LIGHT NZ

TEAM NAME: FIRSTLIGHT NZ
ADDRESS: 139 VIVIAN STREET
TE ARO, WELLINGTON
NEWZEALAND
CONTACT: INFO@FIRSTLIGHTHOUSE.AC.NZ
WWW.FIRSTLIGHTHOUSE.AC.NZ

CONSULTANTS

TENNENT + BROWN ARCHITECTS
DUNNING THORNTON CONSULTANTS LTD
LEAP AUSTRALASIA LTD
SOUTHERN PERSPECTIVES / SOLAR CITY

CLIENT
U.S. DEPARTMENT OF ENERGY
SOLAR DECATHLON 2011
WWW.SOLARDECATHLON.GOV

U.S. DEPARTMENT OF ENERGY SOLAR DECATHLON

MARK	DATE	DESCRIPTION
CN	11-01-11	FOR CONSTRUCTION

LOT NUMBER:	LOT NUMBER
DRAWN BY:	Author
CHECKED BY:	Checker
COPYRIGHT:	VICTORIA UNIVERSITY

SHEET TITLE
DECK DETAILS

L-510

8/13/2011 8:40:42 AM

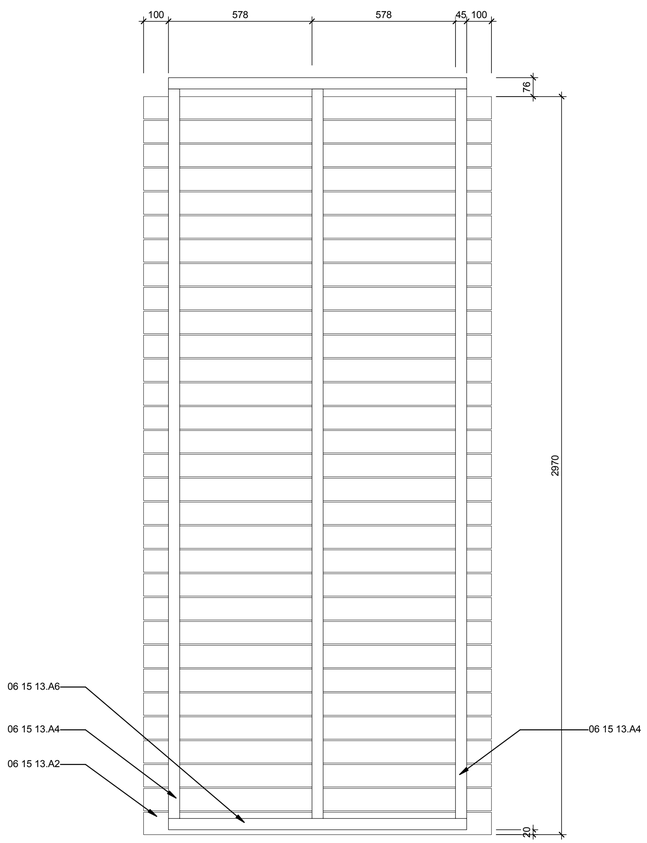

A1 TYPE A & B REFLECTED PLAN
1 : 12
0 1/2' 1' 2'

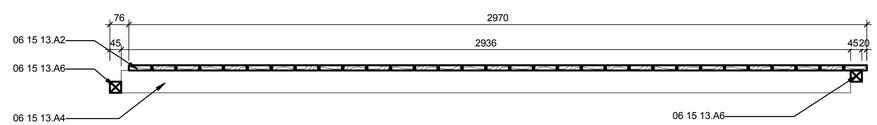

B4 TYPE A SECTION
1 : 12
0 1/2' 1' 2'

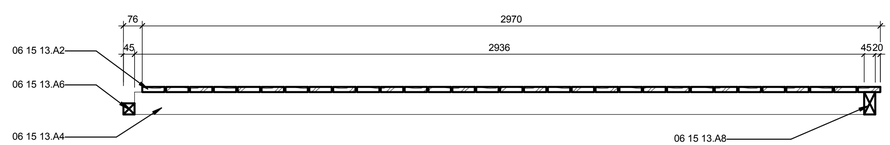

A4 TYPE B SECTION
1 : 12
0 1/2' 1' 2'

GENERAL SHEET NOTES

REFERENCE KEYNOTES

06 15 13.A2	90X21MM DECKING TIMBER
06 15 13.A4	90X45MM TIMBER JOISTS
06 15 13.A6	45X45MM TIMBER HALF JOIST
06 15 13.A8	90X45MM TIMBER END JOIST

SHEET KEYNOTES

FIRST LIGHT NZ

TEAM NAME:	FIRST LIGHT
ADDRESS:	139 VIVIAN STREET TE ARO, WELLINGTON NEWZEALAND
CONTACT:	ELINUTTALL@GMAIL.COM WWW.FIRSTLIGHTHOUSE.AC.NZ

CONSULTANTS

TENNENT + BROWN ARCHITECTS
DUNNING THORNTON CONSULTANTS LTD
LEAP AUSTRALASIA LTD
SOUTHERN PERSPECTIVES / SOLAR CITY

CLIENT

U.S. DEPARTMENT OF ENERGY
SOLAR DECATHLON 2011
WWW.SOLARDECATHLON.GOV

U.S. DEPARTMENT OF ENERGY SOLAR DECATHLON

MARK	DATE	DESCRIPTION
CN	11-01-11	FOR CONSTRUCTION

LOT NUMBER:	LOT NUMBER
DRAWN BY:	Author
CHECKED BY:	Checker
COPYRIGHT:	

SHEET TITLE

DECK MODULE TYPES A & B

L-602

8/13/2011 8:40:47 AM

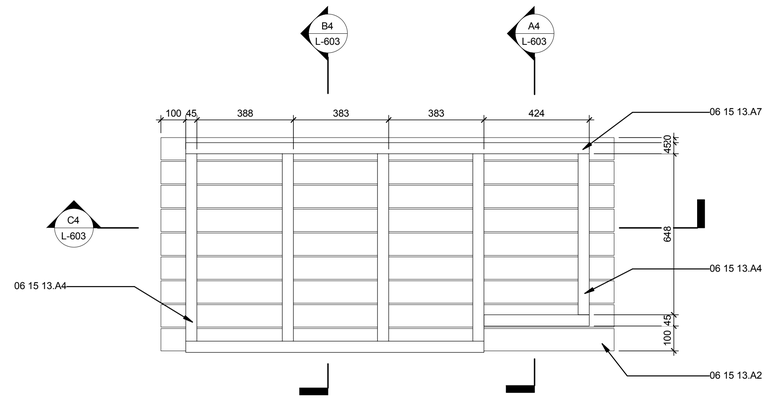

D4 TYPE C REFLECTED PLAN

1 : 12

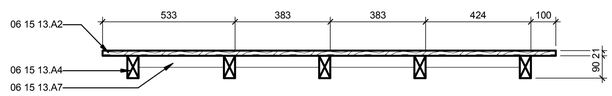

C4 TYPE C LONGITUDINAL SECTION

1 : 12

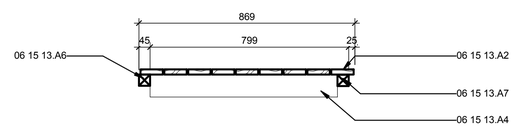

B4 TYPE C CROSS SECTION 1

1 : 12

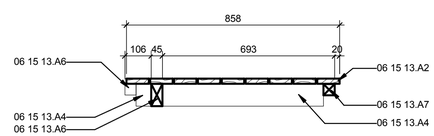

A4 TYPE C CROSS SECTION 2

1 : 12

GENERAL SHEET NOTES

REFERENCE KEYNOTES

06 15 13.A2	90X21MM DECKING TIMBER
06 15 13.A4	90X45MM TIMBER JOISTS
06 15 13.A6	45X45MM TIMBER HALF JOIST
06 15 13.A7	90X45MM TRIMMING JOIST

SHEET KEYNOTES

FIRST LIGHT NZ

TEAM NAME:	FIRSTLIGHT NZ
ADDRESS:	139 VIVIAN STREET TE ARO, WELLINGTON NEWZEALAND
CONTACT:	INFO@FIRSTLIGHTHOUSE.AC.NZ WWW.FIRSTLIGHTHOUSE.AC.NZ

CONSULTANTS

TENNENT + BROWN ARCHITECTS
DUNNING THORNTON CONSULTANTS LTD
LEAP AUSTRALASIA LTD
SOUTHERN PERSPECTIVES / SOLAR CITY

CLIENT

U.S. DEPARTMENT OF ENERGY
SOLAR DECATHLON 2011
WWW.SOLARDECATHLON.GOV

U.S. DEPARTMENT OF ENERGY SOLAR DECATHLON

MARK	DATE	DESCRIPTION
CN	11-01-11	FOR CONSTRUCTION

LOT NUMBER:	LOT NUMBER
DRAWN BY:	Author
CHECKED BY:	Checker
COPYRIGHT:	VICTORIA UNIVERSITY

SHEET TITLE

DECK MODULE TYPE C

L-603

8/13/2011 8:40:51 AM

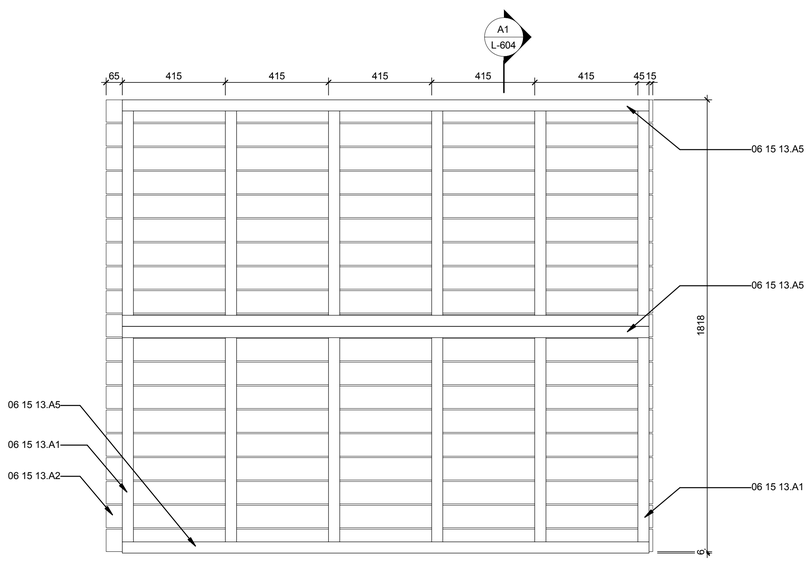

B1 TYPE D REFLECTED PLAN
1 : 12
0 1/2' 1' 2'

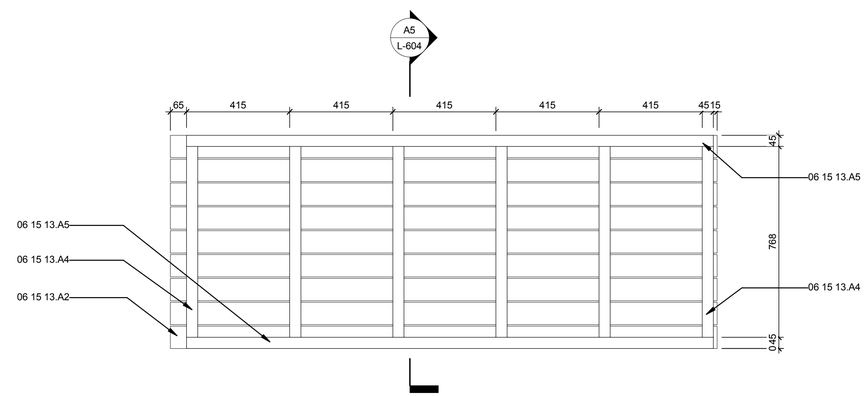

B4 TYPE E REFLECTED PLAN
1 : 12
0 1/2' 1' 2'

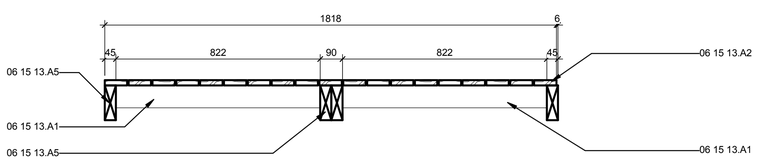

A1 TYPE D SECTION
1 : 12
0 1/2' 1' 2'

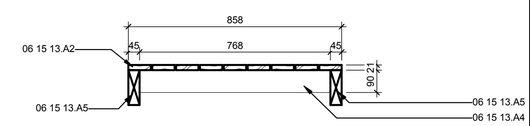

A5 TYPE E SECTION
1 : 12
0 1/2' 1' 2'

GENERAL SHEET NOTES

REFERENCE KEYNOTES

06 15 13.A1	90X45MM BLOCKING TIMBER
06 15 13.A2	90X21MM DECKING TIMBER
06 15 13.A4	90X45MM TIMBER JOISTS
06 15 13.A5	140X45MM TIMBER JOIST

SHEET KEYNOTES

FIRST LIGHT NZ

TEAM NAME:	FIRSTLIGHT NZ
ADDRESS:	139 VIVIAN STREET TE ARO, WELLINGTON NEWZEALAND
CONTACT:	INFO@FIRSTLIGHTHOUSE.AC.NZ WWW.FIRSTLIGHTHOUSE.AC.NZ

CONSULTANTS

TENNENT + BROWN ARCHITECTS
DUNNING THORNTON CONSULTANTS LTD
LEAP AUSTRALASIA LTD
SOUTHERN PERSPECTIVES / SOLAR CITY

CLIENT

U.S. DEPARTMENT OF ENERGY
SOLAR DECATHLON 2011
WWW.SOLARDECATHLON.GOV

U.S. DEPARTMENT OF ENERGY SOLAR DECATHLON

MARK	DATE	DESCRIPTION
CN	11-01-11	FOR CONSTRUCTION

LOT NUMBER:	LOT NUMBER
DRAWN BY:	Author
CHECKED BY:	Checker
COPYRIGHT:	VICTORIA UNIVERSITY

SHEET TITLE

DECK MODULE TYPE D & E

L-604

8/13/2011 8:40:55 AM

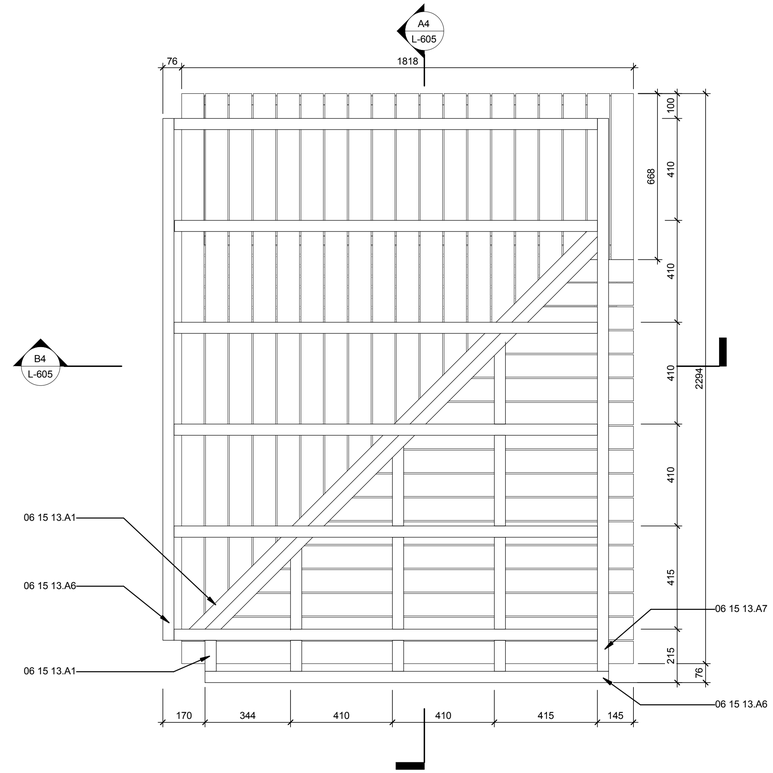

C4 TYPE F REFLECTED PLAN
1 : 12

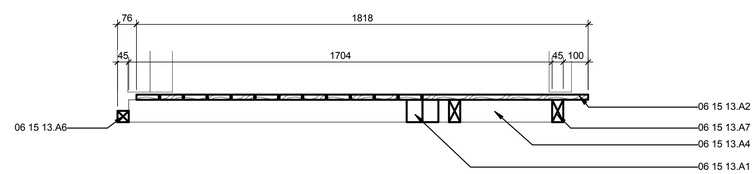

B4 TYPE F SECTION 1
1 : 12

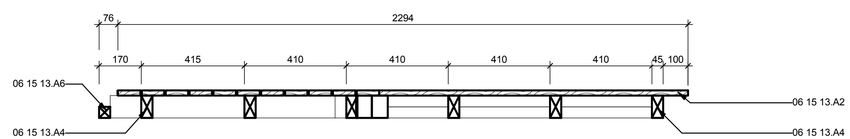

A4 TYPE F SECTION 2
1 : 12

GENERAL SHEET NOTES

REFERENCE KEYNOTES

06 15 13.A1	90X45MM BLOCKING TIMBER
06 15 13.A2	90X21MM DECKING TIMBER
06 15 13.A4	90X45MM TIMBER JOISTS
06 15 13.A6	45X45MM TIMBER HALF JOIST
06 15 13.A7	90X45MM TRIMMING JOIST

SHEET KEYNOTES

FIRST LIGHT NZ

TEAM NAME:	FIRSTLIGHT NZ
ADDRESS:	139 VIVIAN STREET TE ARO, WELLINGTON NEWZEALAND
CONTACT:	INFO@FIRSTLIGHTHOUSE.AC.NZ WWW.FIRSTLIGHTHOUSE.AC.NZ

CONSULTANTS

TENNENT + BROWN ARCHITECTS
DUNNING THORNTON CONSULTANTS LTD
LEAP AUSTRALASIA LTD
SOUTHERN PERSPECTIVES / SOLAR CITY

CLIENT

U.S. DEPARTMENT OF ENERGY
SOLAR DECATHLON 2011
WWW.SOLARDECATHLON.GOV

U.S. DEPARTMENT OF ENERGY SOLAR DECATHLON

MARK	DATE	DESCRIPTION
CN	11-01-11	FOR CONSTRUCTION

LOT NUMBER:	LOT NUMBER
DRAWN BY:	Author
CHECKED BY:	Checker
COPYRIGHT:	VICTORIA UNIVERSITY

SHEET TITLE

DECK MODULE TYPE F

L-605

8/13/2011 8:40:59 AM

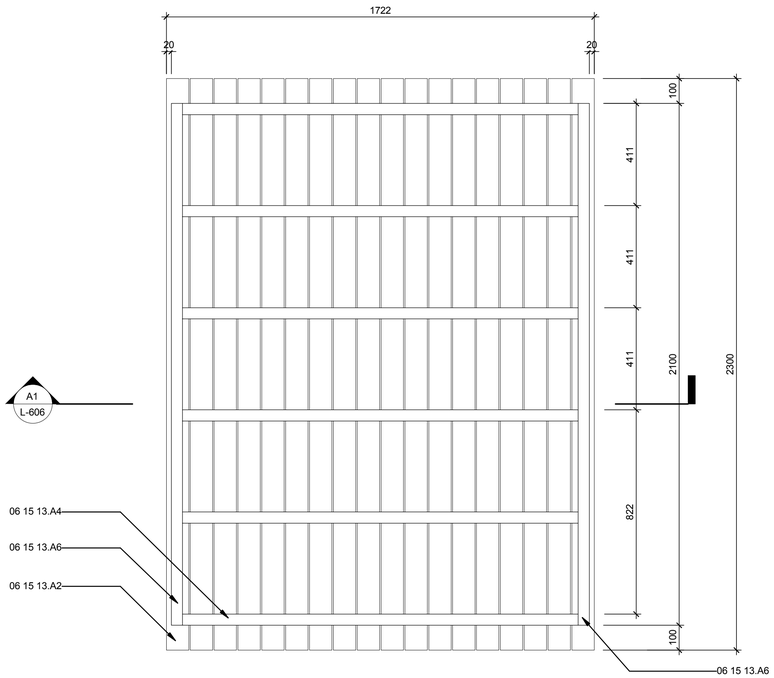

B1 TYPE G REFLECTED PLAN
1 : 12

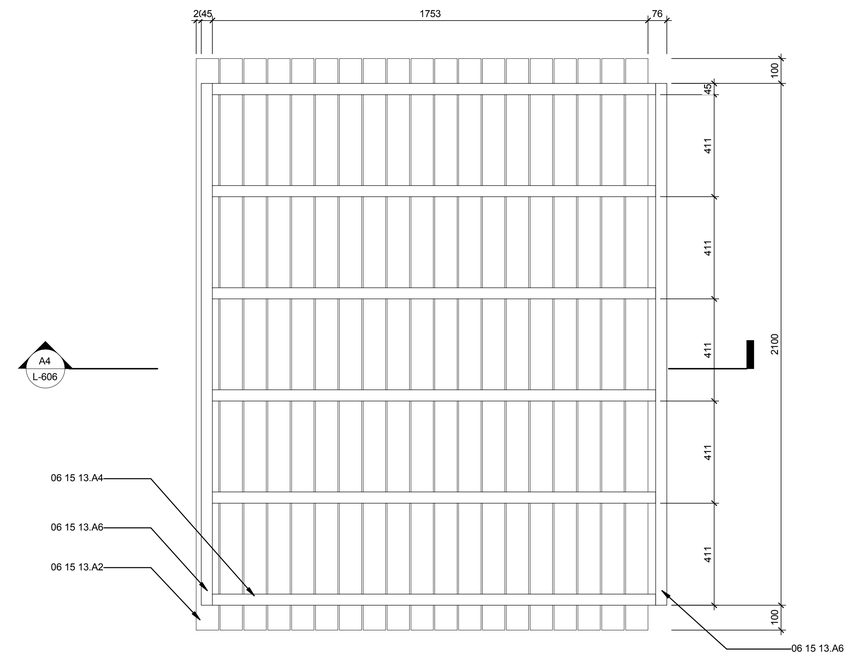

B4 TYPE H REFLECTED PLAN
1 : 12

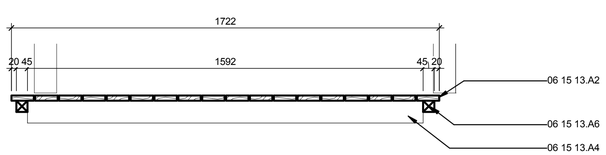

A1 TYPE G SECTION
1 : 12

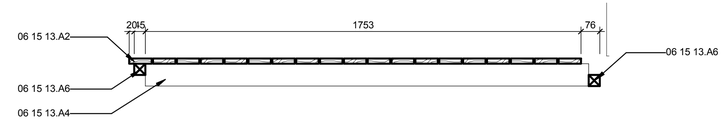

A4 TYPE H SECTION
1 : 12

GENERAL SHEET NOTES

REFERENCE KEYNOTES

06 15 13.A2	90X21MM DECKING TIMBER
06 15 13.A4	90X45MM TIMBER JOISTS
06 15 13.A6	45X45MM TIMBER HALF JOIST

SHEET KEYNOTES

FIRST LIGHT NZ

TEAM NAME:	FIRSTLIGHT NZ
ADDRESS:	139 VIVIAN STREET TE ARO, WELLINGTON NEWZEALAND
CONTACT:	INFO@FIRSTLIGHTHOUSE.AC.NZ WWW.FIRSTLIGHTHOUSE.AC.NZ

CONSULTANTS

TENNENT + BROWN ARCHITECTS
DUNNING THORNTON CONSULTANTS LTD
LEAP AUSTRALASIA LTD
SOUTHERN PERSPECTIVES / SOLAR CITY

CLIENT

U.S. DEPARTMENT OF ENERGY
SOLAR DECATHLON 2011
WWW.SOLARDECATHLON.GOV

U.S. DEPARTMENT OF ENERGY SOLAR DECATHLON

MARK	DATE	DESCRIPTION
CN	11-01-11	FOR CONSTRUCTION

LOT NUMBER:	LOT NUMBER
DRAWN BY:	Author
CHECKED BY:	Checker
COPYRIGHT:	VICTORIA UNIVERSITY

SHEET TITLE

DECK MODULE TYPE G & H

L-606

8/13/2011 8:41:03 AM

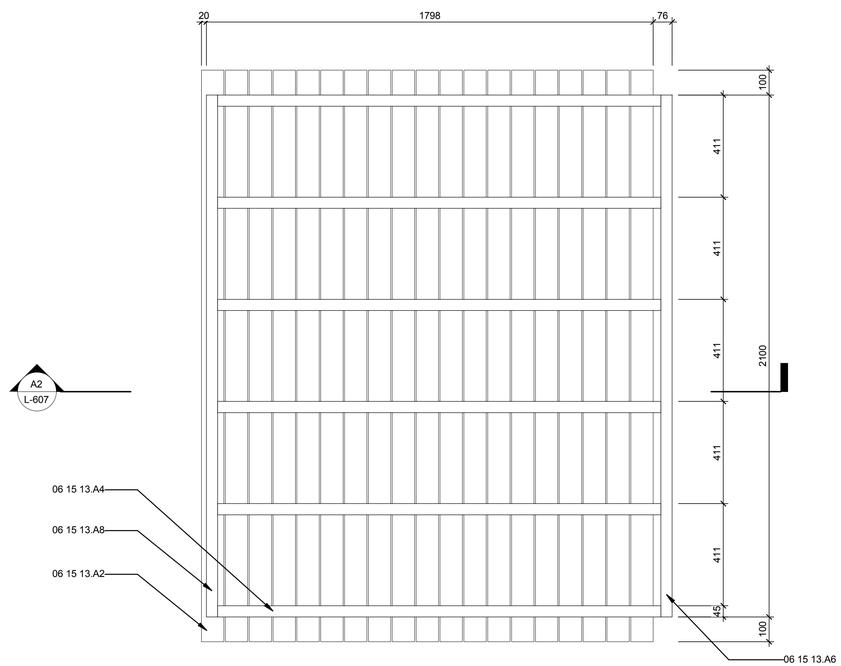

B2 TYPE J REFLECTED PLAN
1 : 12

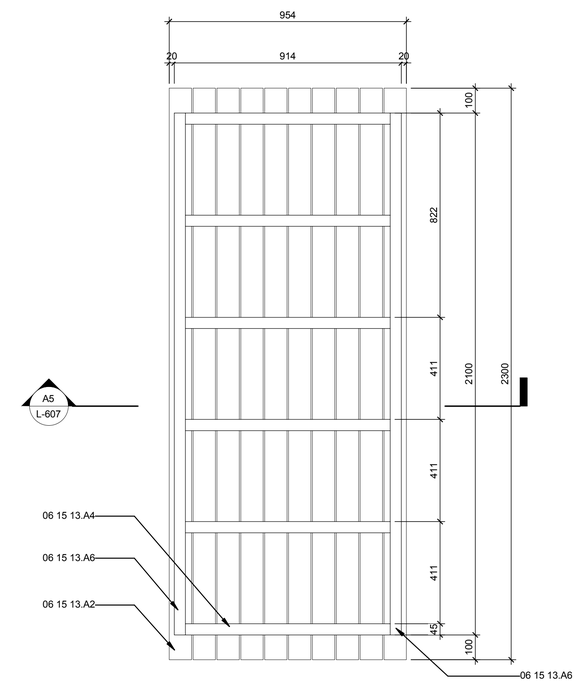

B5 TYPE K REFLECTED PLAN
1 : 12

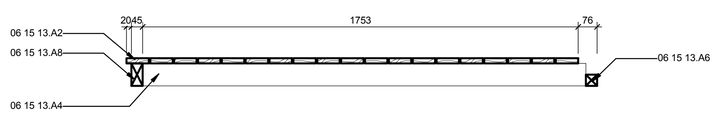

A2 TYPE J SECTION
1 : 12

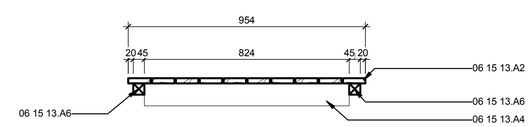

A5 TYPE K SECTION
1 : 12

GENERAL SHEET NOTES

REFERENCE KEYNOTES

06 15 13.A2	90X21MM DECKING TIMBER
06 15 13.A4	90X45MM TIMBER JOISTS
06 15 13.A6	45X45MM TIMBER HALF JOIST
06 15 13.A8	90X45MM TIMBER END JOIST

SHEET KEYNOTES

FIRST LIGHT NZ

TEAM NAME:	FIRST LIGHT
ADDRESS:	139 VIVIAN STREET TE ARO, WELLINGTON NEWZEALAND
CONTACT:	ELINUTTALL@GMAIL.COM WWW.FIRSTLIGHTHOUSE.AC.NZ

CONSULTANTS

TENNENT + BROWN ARCHITECTS
DUNNING THORNTON CONSULTANTS LTD
LEAP AUSTRALASIA LTD
SOUTHERN PERSPECTIVES / SOLAR CITY

CLIENT
U.S. DEPARTMENT OF ENERGY
SOLAR DECATHLON 2011
WWW.SOLARDECATHLON.GOV

U.S. DEPARTMENT OF ENERGY SOLAR DECATHLON

MARK	DATE	DESCRIPTION
CN	11-01-11	FOR CONSTRUCTION

LOT NUMBER:	LOT NUMBER
DRAWN BY:	Author
CHECKED BY:	Checker
COPYRIGHT:	

SHEET TITLE
DECK MODULE TYPE J & K

L-607

8/13/2011 8:41:08 AM

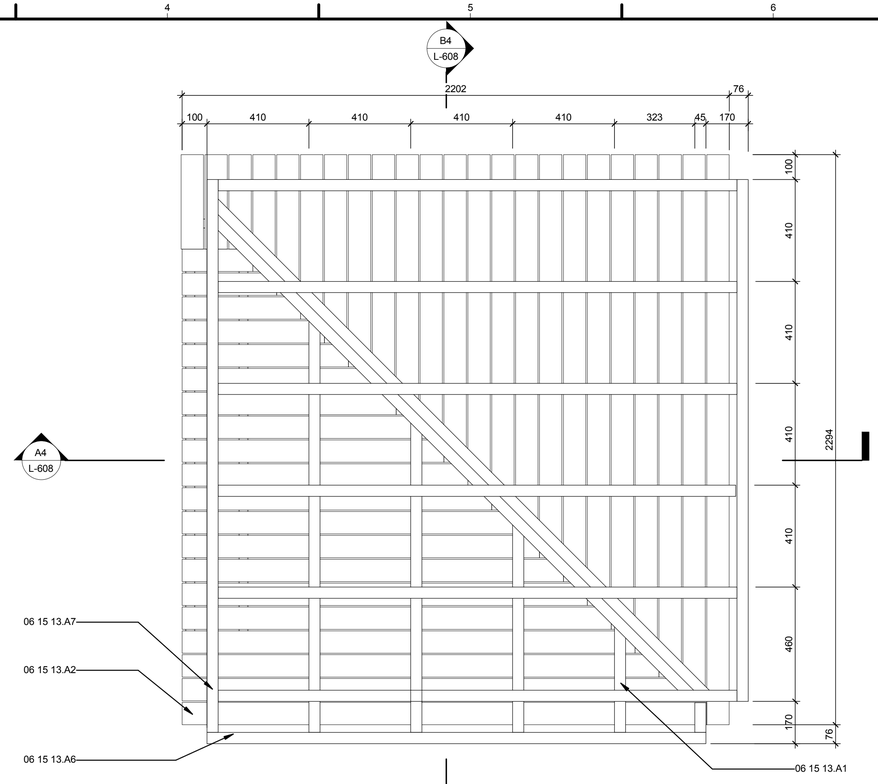

C4 TYPE L REFLECTED PLAN
1 : 12

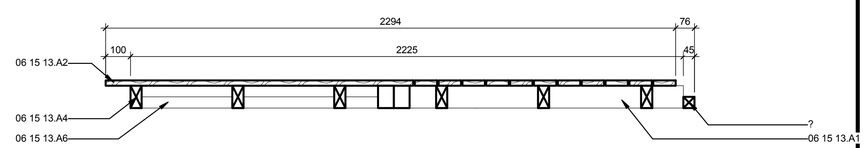

B4 TYPE L SECTION A-A
1 : 12

A4 TYPE L SECTION B-B
1 : 12

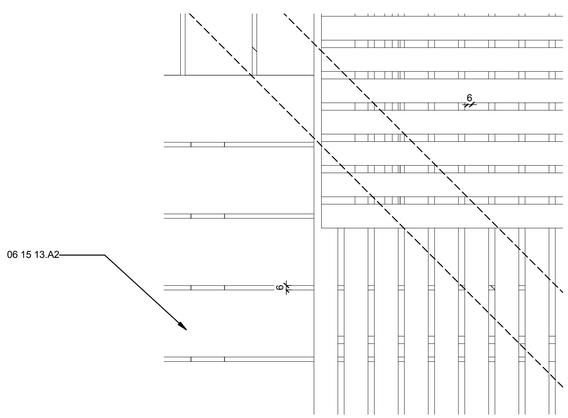

A2 HERRINGBONE CORNER DETAIL
1 : 4

GENERAL SHEET NOTES

REFERENCE KEYNOTES

06 15 13.A1	90X45MM BLOCKING TIMBER
06 15 13.A2	90X21MM DECKING TIMBER
06 15 13.A4	90X45MM TIMBER JOISTS
06 15 13.A6	45X45MM TIMBER HALF JOIST
06 15 13.A7	90X45MM TRIMMING JOIST

SHEET KEYNOTES

FIRST LIGHT NZ

TEAM NAME:	FIRSTLIGHT NZ
ADDRESS:	139 VIVIAN STREET TE ARO, WELLINGTON NEWZEALAND
CONTACT:	INFO@FIRSTLIGHTHOUSE.AC.NZ WWW.FIRSTLIGHTHOUSE.AC.NZ

CONSULTANTS

TENNENT + BROWN ARCHITECTS
DUNNING THORNTON CONSULTANTS LTD
LEAP AUSTRALASIA LTD
SOUTHERN PERSPECTIVES / SOLAR CITY

CLIENT

U.S. DEPARTMENT OF ENERGY
SOLAR DECATHLON 2011
WWW.SOLARDECATHLON.GOV

U.S. DEPARTMENT OF ENERGY SOLAR DECATHLON

MARK	DATE	DESCRIPTION
CN	11-01-11	FOR CONSTRUCTION

LOT NUMBER:	LOT NUMBER
DRAWN BY:	Author
CHECKED BY:	Checker
COPYRIGHT:	VICTORIA UNIVERSITY

SHEET TITLE

DECK MODULE TYPE L

L-608

8/13/2011 8:41:12 AM

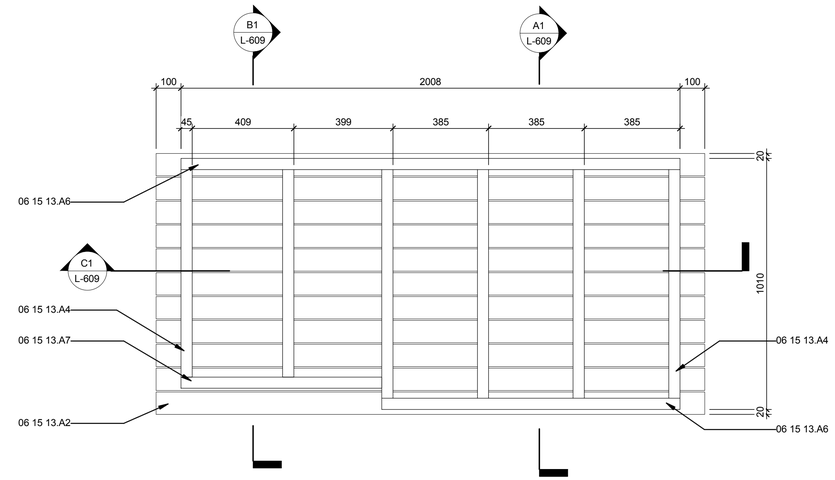

D1 TYPE M REFLECTED PLAN

1 : 12

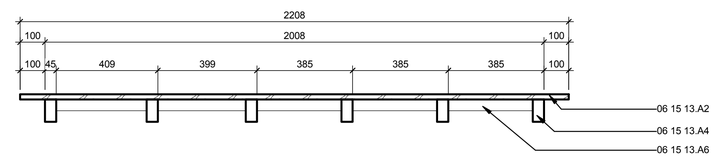

C1 TYPE M LONGITUDINAL SECTION

1 : 12

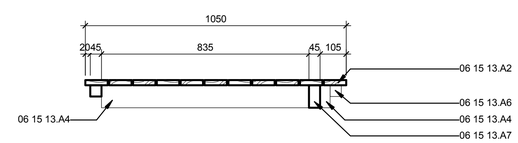

B1 TYPE M CROSS SECTION 1

1 : 12

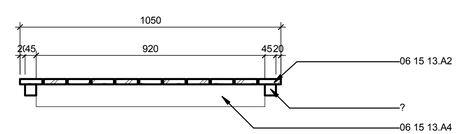

A1 TYPE M CROSS SECTION 2

1 : 12

GENERAL SHEET NOTES

REFERENCE KEYNOTES

06 15 13.A2	90X21MM DECKING TIMBER
06 15 13.A4	90X45MM TIMBER JOISTS
06 15 13.A6	45X45MM TIMBER HALF JOIST
06 15 13.A7	90X45MM TRIMMING JOIST

SHEET KEYNOTES

FIRST LIGHT NZ

TEAM NAME:	FIRST LIGHT
ADDRESS:	139 VIVIAN STREET TE ARO, WELLINGTON NEWZEALAND
CONTACT:	ELINUTTALL@GMAIL.COM WWW.FIRSTLIGHTHOUSE.AC.NZ

CONSULTANTS

TENNENT + BROWN ARCHITECTS
DUNNING THORNTON CONSULTANTS LTD
LEAP AUSTRALASIA LTD
SOUTHERN PERSPECTIVES / SOLAR CITY

CLIENT

U.S. DEPARTMENT OF ENERGY
SOLAR DECATHLON 2011
WWW.SOLARDECATHLON.GOV

U.S. DEPARTMENT OF ENERGY SOLAR DECATHLON

MARK	DATE	DESCRIPTION
CN	11-01-11	FOR CONSTRUCTION

LOT NUMBER:	LOT NUMBER
DRAWN BY:	Author
CHECKED BY:	Checker
COPYRIGHT:	

SHEET TITLE

DECK MODULE TYPE M

L-609

8/13/2011 8:41:16 AM

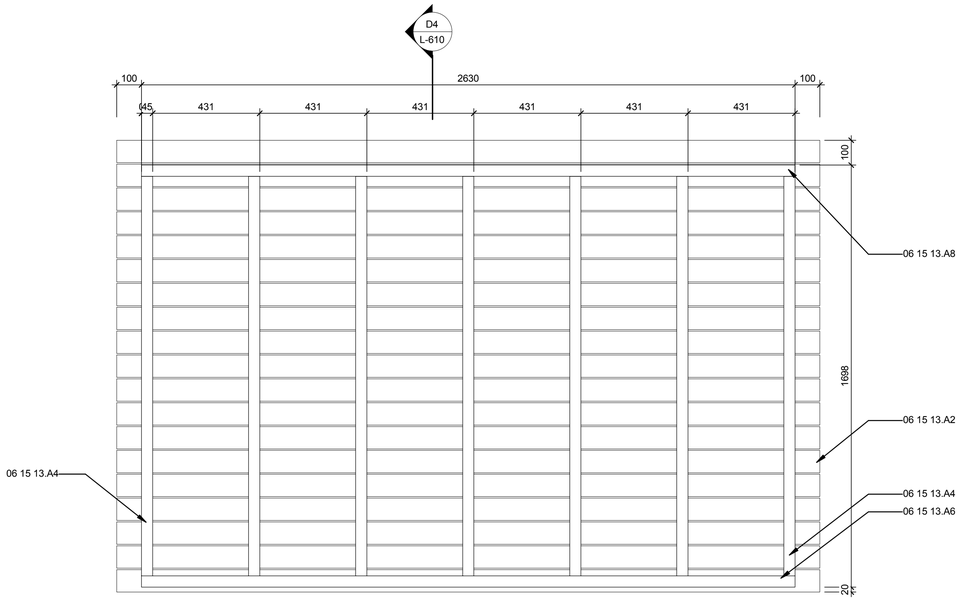

C1 TYPE N REFLECTED PLAN
1 : 12

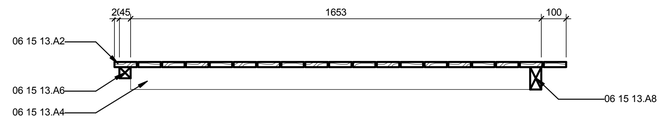

D4 TYPE N SECTION
1 : 12

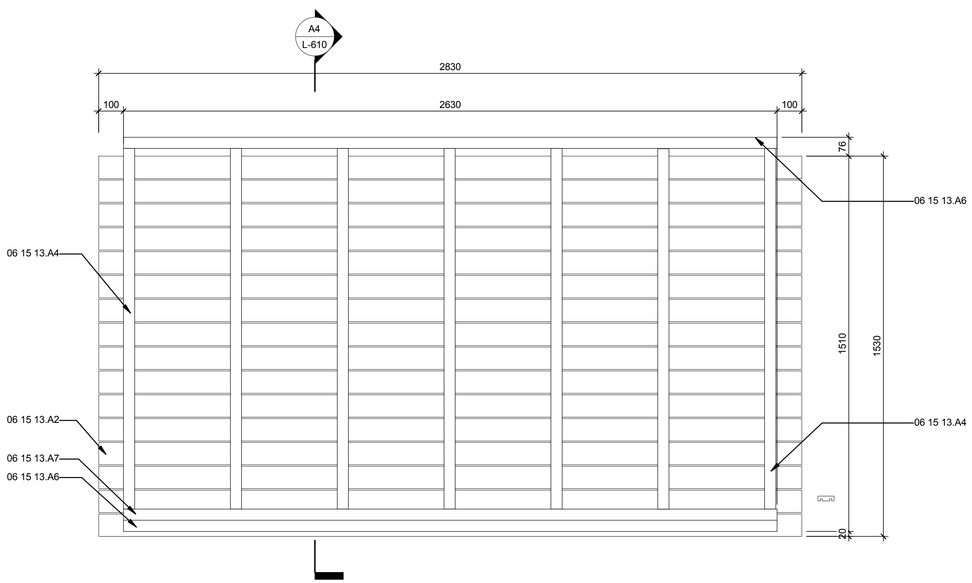

A1 TYPE O REFLECTED PLAN
1 : 12

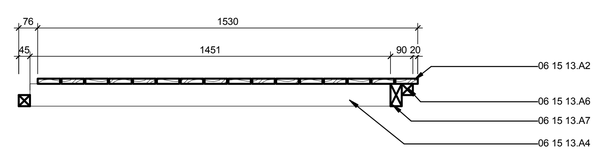

A4 TYPE O SECTION
1 : 12

GENERAL SHEET NOTES

REFERENCE KEYNOTES

06 15 13.A2	90X21MM DECKING TIMBER
06 15 13.A4	90X45MM TIMBER JOISTS
06 15 13.A6	45X45MM TIMBER HALF JOIST
06 15 13.A7	90X45MM TRIMMING JOIST
06 15 13.A8	90X45MM TIMBER END JOIST

SHEET KEYNOTES

FIRST LIGHT NZ

TEAM NAME: FIRSTLIGHT NZ
ADDRESS: 139 VIVIAN STREET
TE ARO, WELLINGTON
NEWZEALAND
CONTACT: INFO@FIRSTLIGHTHOUSE.AC.NZ
WWW.FIRSTLIGHTHOUSE.AC.NZ

CONSULTANTS

TENNENT + BROWN ARCHITECTS
DUNNING THORNTON CONSULTANTS LTD
LEAP AUSTRALASIA LTD
SOUTHERN PERSPECTIVES / SOLAR CITY

CLIENT
U.S. DEPARTMENT OF ENERGY
SOLAR DECATHLON 2011
WWW.SOLARDECATHLON.GOV

U.S. DEPARTMENT OF ENERGY SOLAR DECATHLON

MARK	DATE	DESCRIPTION
CN	11-01-11	FOR CONSTRUCTION

LOT NUMBER:	LOT NUMBER
DRAWN BY:	Author
CHECKED BY:	Checker
COPYRIGHT:	VICTORIA UNIVERSITY

SHEET TITLE

DECK MODULE TYPE N & O

L-610

8/13/2011 8:41:21 AM

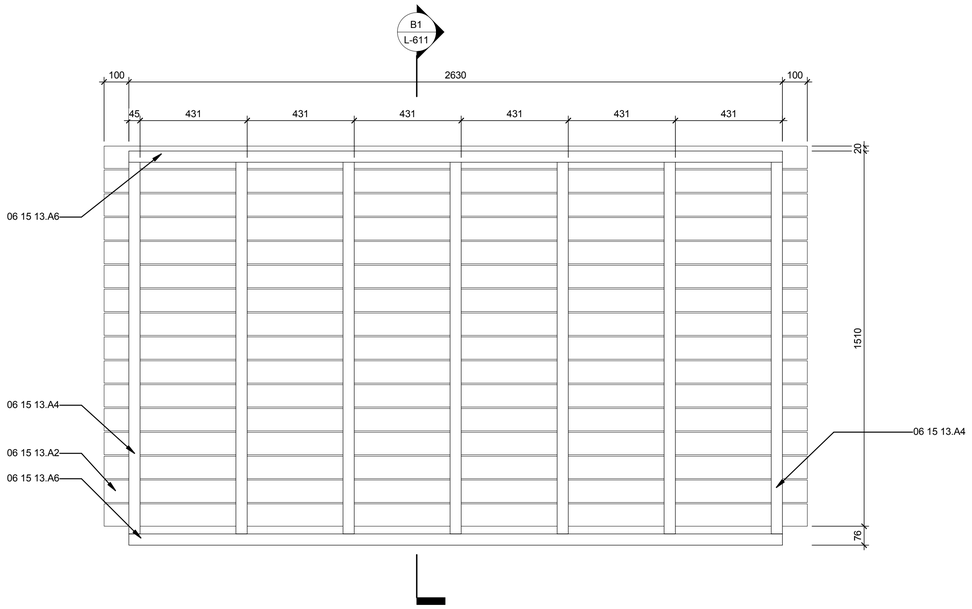

C1 TYPE P REFLECTED PLAN
1 : 12

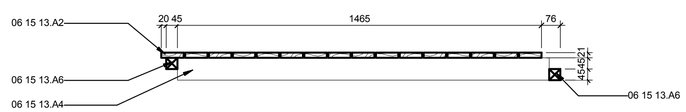

B1 TYPE P SECTION
1 : 12

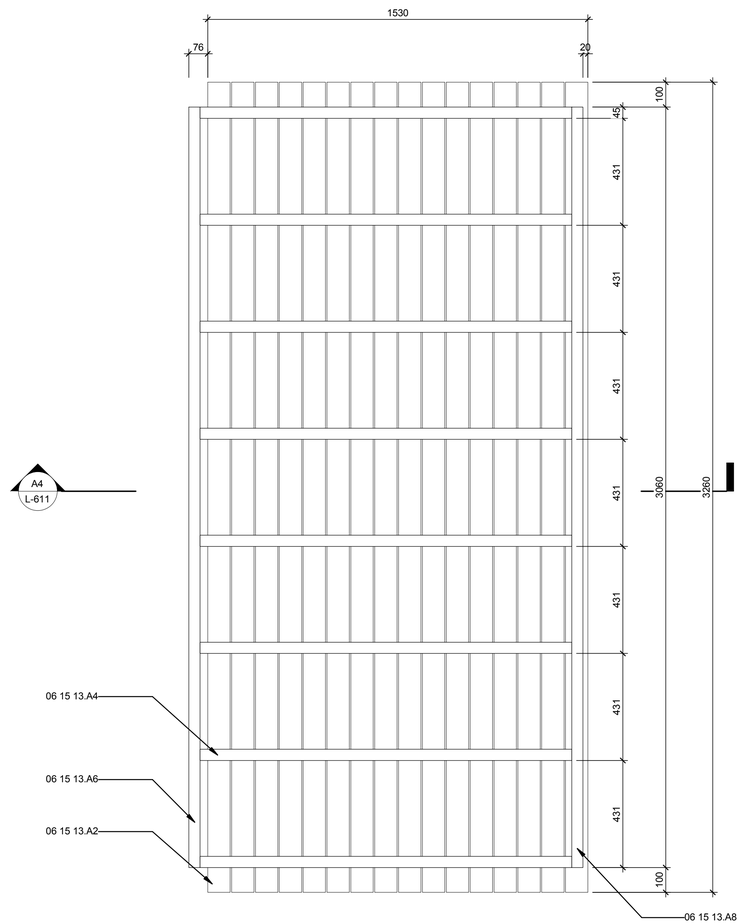

B4 TYPE Q REFLECTED PLAN
1 : 12

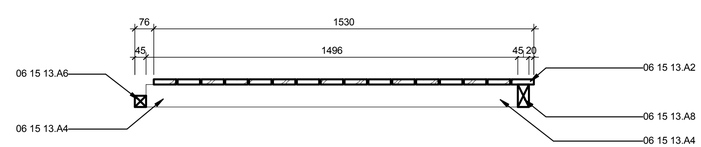

A4 TYPE Q SECTION
1 : 12

GENERAL SHEET NOTES

REFERENCE KEYNOTES

06 15 13.A2	90X21MM DECKING TIMBER
06 15 13.A4	90X45MM TIMBER JOISTS
06 15 13.A6	45X45MM TIMBER HALF JOIST
06 15 13.A8	90X45MM TIMBER END JOIST

SHEET KEYNOTES

FIRST LIGHT NZ

TEAM NAME:	FIRSTLIGHT NZ
ADDRESS:	139 VIVIAN STREET TE ARO, WELLINGTON NEWZEALAND
CONTACT:	INFO@FIRSTLIGHTHOUSE.AC.NZ WWW.FIRSTLIGHTHOUSE.AC.NZ

CONSULTANTS

TENNENT + BROWN ARCHITECTS
DUNNING THORNTON CONSULTANTS LTD
LEAP AUSTRALASIA LTD
SOUTHERN PERSPECTIVES / SOLAR CITY

CLIENT
U.S. DEPARTMENT OF ENERGY
SOLAR DECATHLON 2011
WWW.SOLARDECATHLON.GOV

U.S. DEPARTMENT OF ENERGY SOLAR DECATHLON

MARK	DATE	DESCRIPTION
CN	11-01-11	FOR CONSTRUCTION

LOT NUMBER:	LOT NUMBER
DRAWN BY:	Author
CHECKED BY:	Checker
COPYRIGHT:	VICTORIA UNIVERSITY

SHEET TITLE
DECK MODULE TYPE P & Q

L-611

8/13/2011 8:41:25 AM

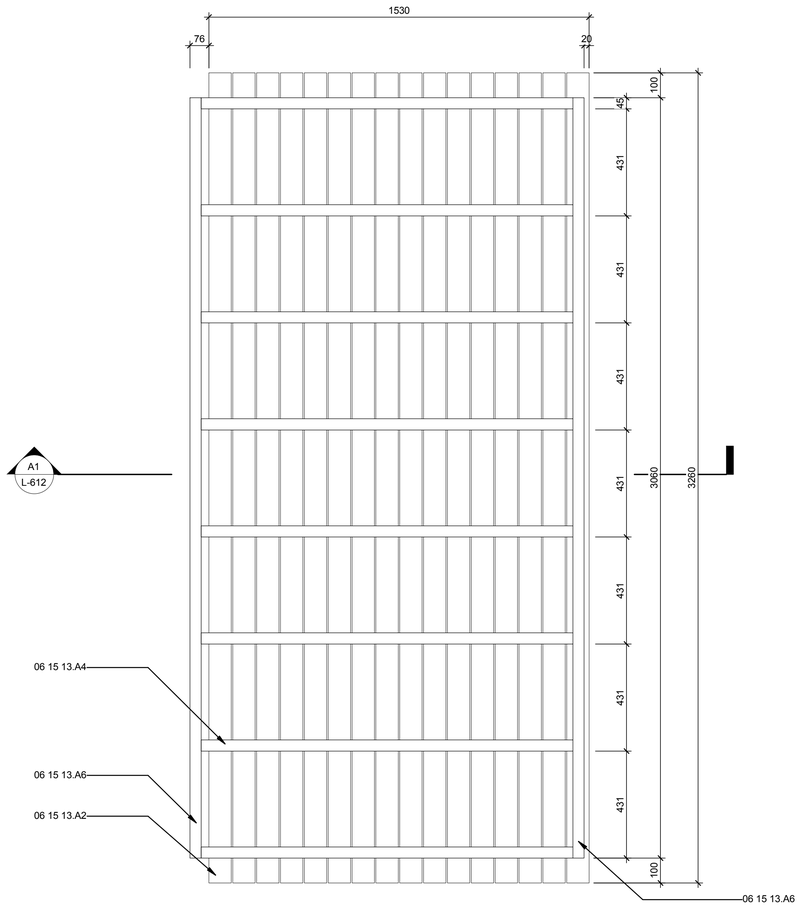

B1 TYPE R REFLECTED PLAN
1 : 12

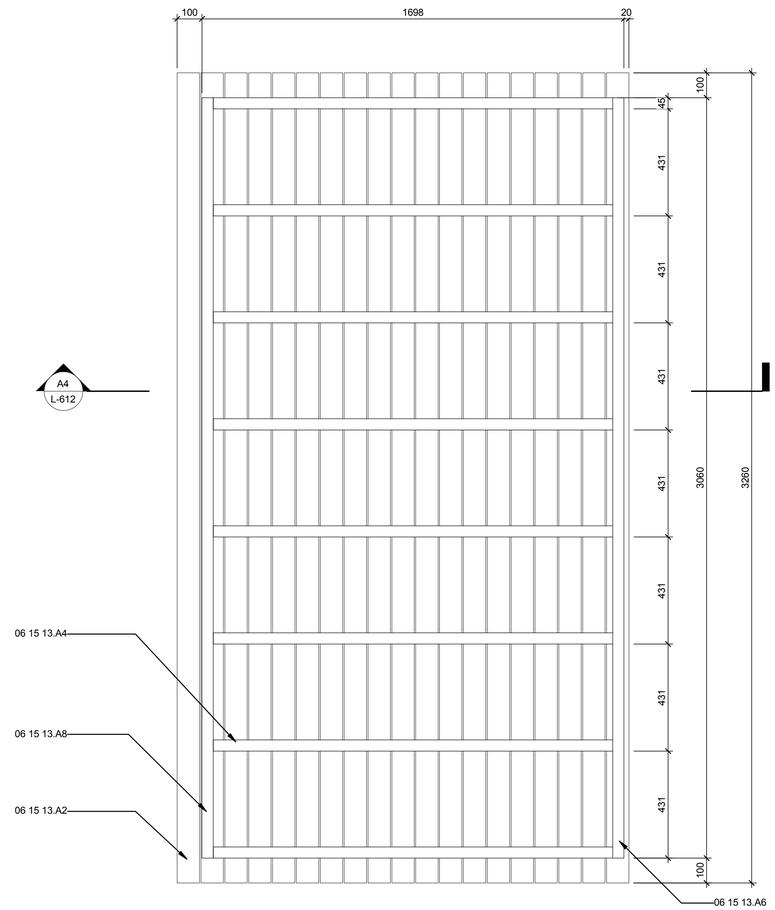

B4 TYPE S REFLECTED PLAN
1 : 12

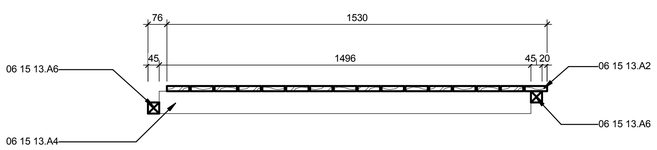

A1 TYPE R SECTION
1 : 12

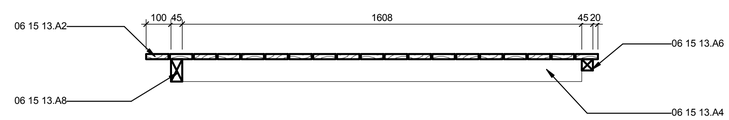

A4 TYPE S SECTION
1 : 12

GENERAL SHEET NOTES

REFERENCE KEYNOTES

06 15 13.A2	90X21MM DECKING TIMBER
06 15 13.A4	90X45MM TIMBER JOISTS
06 15 13.A6	45X45MM TIMBER HALF JOIST
06 15 13.A8	90X45MM TIMBER END JOIST

SHEET KEYNOTES

FIRST LIGHT NZ

TEAM NAME:	FIRST LIGHT
ADDRESS:	139 VIVIAN STREET TE ARO, WELLINGTON NEWZEALAND
CONTACT:	ELINUTTALL@GMAIL.COM WWW.FIRSTLIGHTHOUSE.AC.NZ

CONSULTANTS

TENNENT + BROWN ARCHITECTS
DUNNING THORNTON CONSULTANTS LTD
LEAP AUSTRALASIA LTD
SOUTHERN PERSPECTIVES / SOLAR CITY

CLIENT
U.S. DEPARTMENT OF ENERGY
SOLAR DECATHLON 2011
WWW.SOLARDECATHLON.GOV

U.S. DEPARTMENT OF ENERGY SOLAR DECATHLON

MARK	DATE	DESCRIPTION
CN	11-01-11	FOR CONSTRUCTION

LOT NUMBER:	LOT NUMBER
DRAWN BY:	Author
CHECKED BY:	Checker
COPYRIGHT:	

SHEET TITLE

DECK MODULE TYPE R & S

L-612

8/13/2011 8:41:30 AM

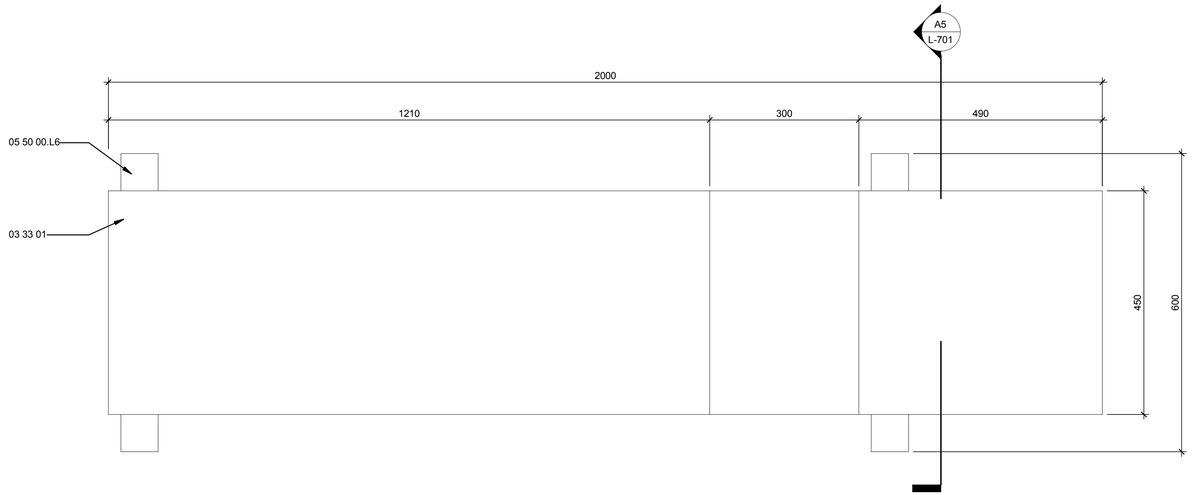

D1 LANDSCAPE BENCH PLAN
1 : 6

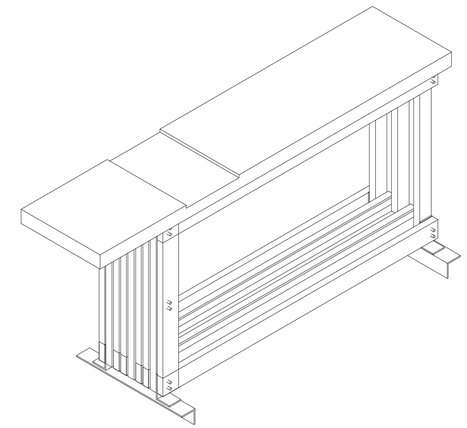

D5 LANDSCAPE BENCH ISOMETRIC

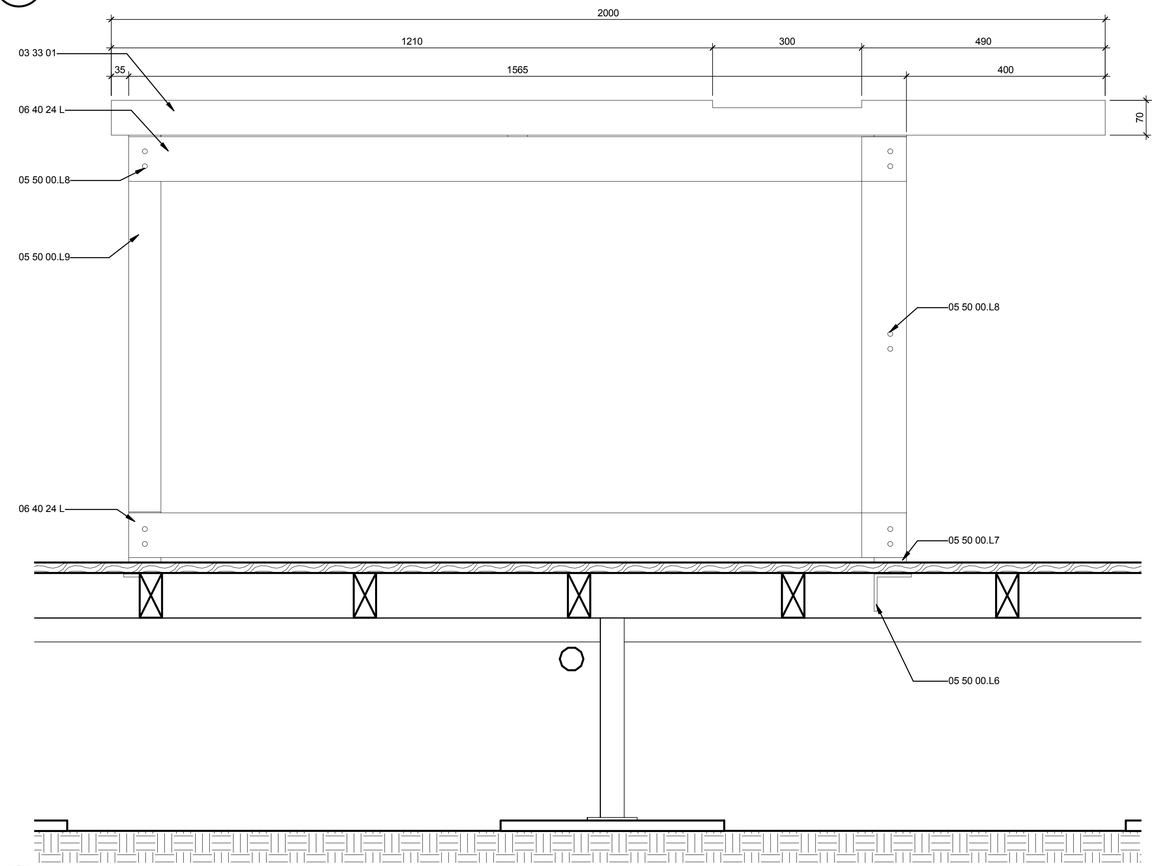

A1 EXTERIOR BENCH ELEVATION
1 : 6

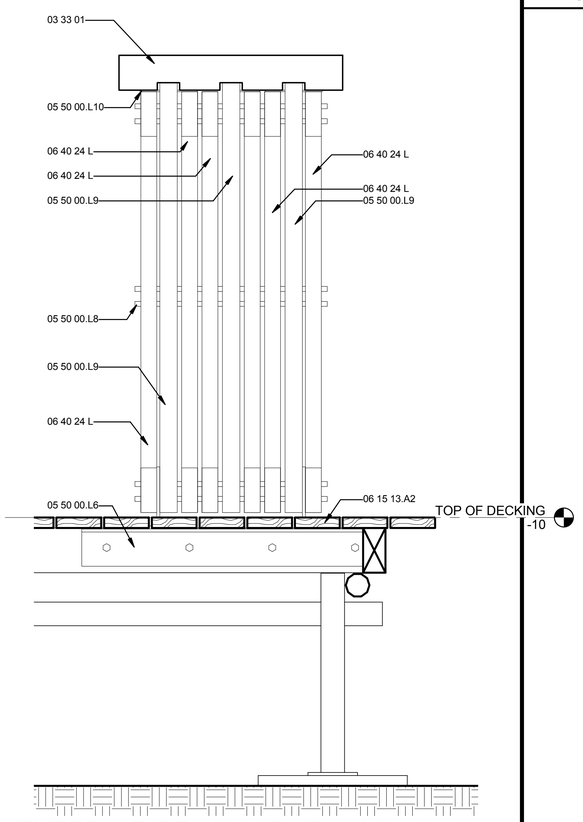

A5 EXTERIOR BENCH SECTION 1
1 : 6

GENERAL SHEET NOTES

REFERENCE KEYNOTES

03 33 01	70MM THICK HOLLOWCORE CONCRETE BENCHTOP
05 50 00.L6	75 X 6MM EQUAL ANGLE BOLTED TO DECKING JOISTS WITH STAINLESS STEEL M12 BOLTS
05 50 00.L7	125 X 75 X 6MM ANGLE WELDED TO EQUAL ANGLE BELOW. FIXED TO TABLE STRUCTURAL FRAME WITH 10MM STAINLESS STEEL THREADED ROD AS INDICATED
05 50 00.L8	M10 STAINLESS STEEL THREADED ROD WITH STAINLESS STEEL WASHERS AND HEX NUTS EITHER END
05 50 00.L9	65 X 35MM RHS STRUCTURAL FRAME. BEAMS BUTT WELDED TO LEGS.
05 50 00.L10	40 X 40 X 3MM TAB WELDED TO STEEL FRAME; ALLOWS FRAME TO BE FIXED TO CONCRETE TOP
06 15 13.A2	90X21MM DECKING TIMBER
06 40 24 L	90 X 32MM PINE FIXED TO STEEL STRUCTURE WITH M10 STAINLESS STEEL THREADED ROD

SHEET KEYNOTES

FIRST LIGHT NZ

TEAM NAME:	FIRST LIGHT
ADDRESS:	139 VIVIAN STREET TE ARO, WELLINGTON NEWZEALAND
CONTACT:	ELINUTTALL@GMAIL.COM WWW.FIRSTLIGHTHOUSE.AC.NZ

CONSULTANTS

TENNENT + BROWN ARCHITECTS

DUNNING THORNTON CONSULTANTS LTD

LEAP AUSTRALASIA LTD

SOUTHERN PERSPECTIVES / SOLAR CITY

CLIENT

U.S. DEPARTMENT OF ENERGY

SOLAR DECATHLON 2011

WWW.SOLARDECATHLON.GOV

U.S. DEPARTMENT OF ENERGY SOLAR DECATHLON

MARK	DATE	DESCRIPTION
CN	11-01-11	FOR CONSTRUCTION

LOT NUMBER:	LOT NUMBER
DRAWN BY:	Author
CHECKED BY:	Checker
COPYRIGHT:	

SHEET TITLE

EXTERIOR BENCH

L-701

8/13/2011 8:41:34 AM

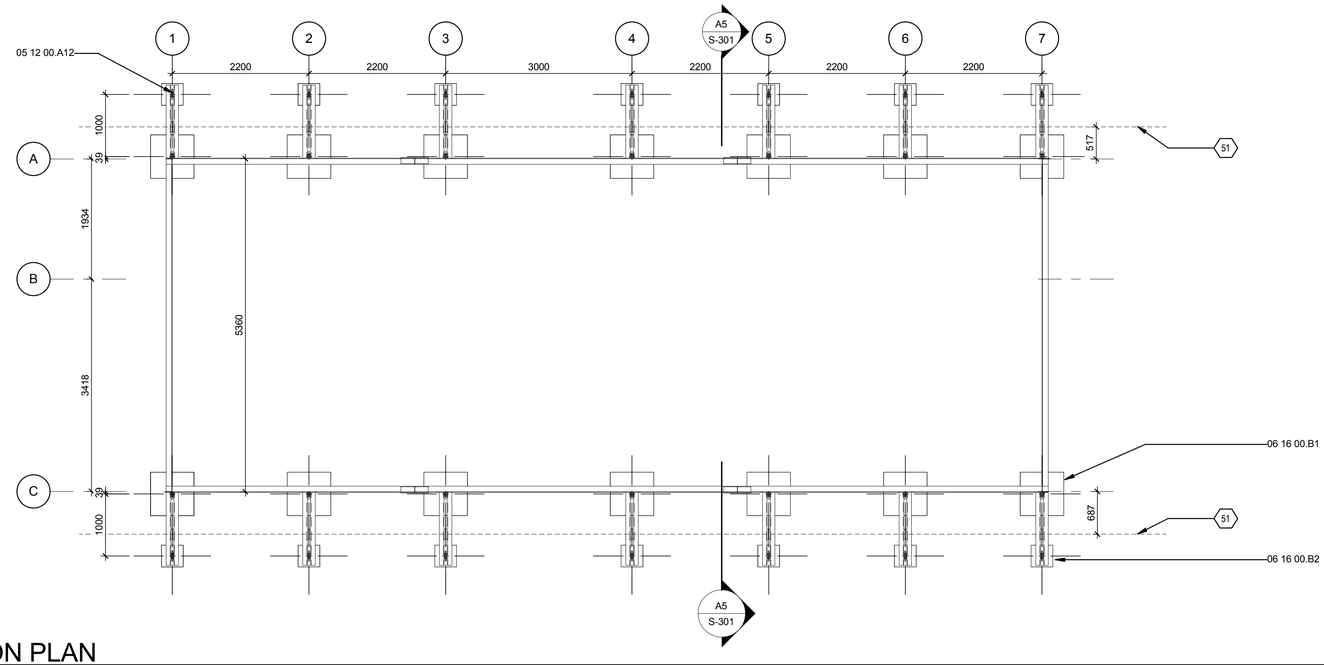

C1 FOUNDATION PLAN

1 : 48

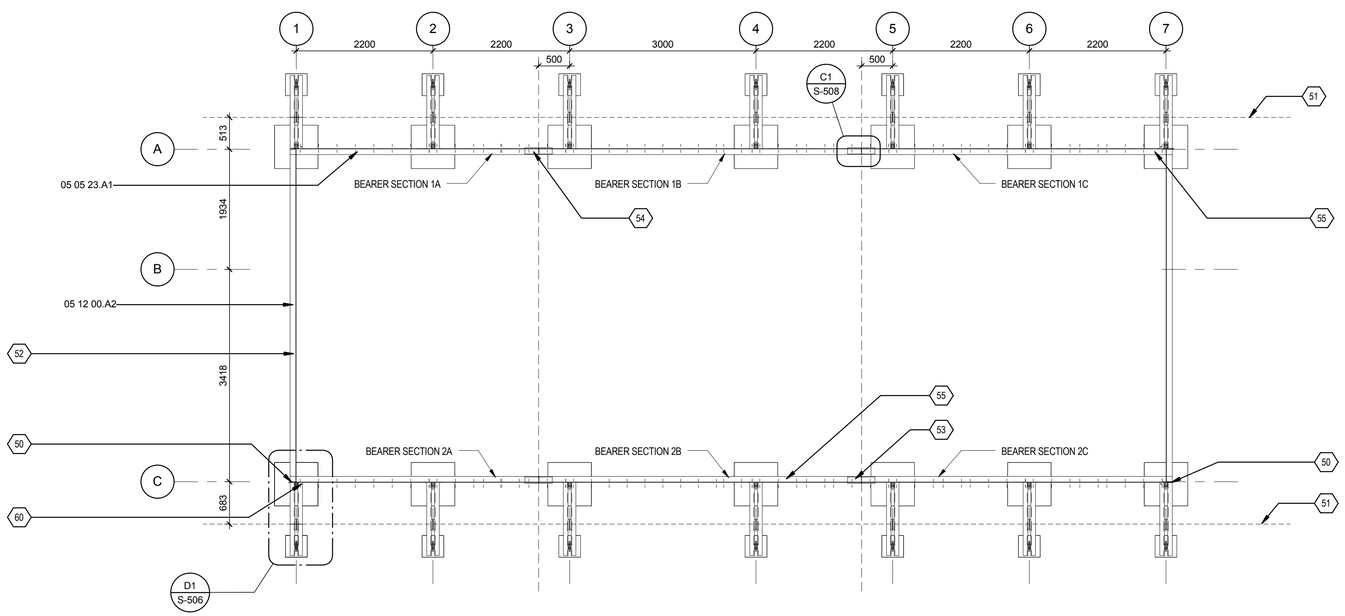

A1 STRUCTURAL STEEL FRAMING PLAN

1 : 48

GENERAL SHEET NOTES

REFERENCE KEYNOTES

05 05 23.A1	M16 COUNTERSUNK BOLT
05 12 00.A2	100X100X100X10 EA FOUNDATION BRACING STRUT. BOLT FIXED THROUGH BOTTOM FLANGE TO FOUNDATION BEARER
05 12 00.A12	ADJUSTABLE STEEL SCAFFOLD SCREW WITH 700X700MM PLYWOOD FOOTING. MAXIMUM VERTICAL DEVIATION 463MM
06 16 00.B1	700X700MM, 3X21MM PLYWOOD FOUNDATION BASE
06 16 00.B2	350X350MM, 3X21MM PLYWOOD FOUNDATION BASE

SHEET KEYNOTES

50	OUTSIDE EDGE OF CONNECTION PLATE REMOVED FROM THE FOUR CORNER OUTRIGGERS
51	POST CENTRE LINE SHOWN DASHED
52	BOLT FIXED THROUGH BOTTOM FLANGE TO BEARER
53	SPLICE INTO 3 SECTIONS. CONNECTION PLATE WELDED TO SECTIONS 2A & 2C.
54	SPLICE INTO 3 SECTIONS. CONNECTION PLATE WELDED TO SECTIONS 1A &1C.
55	INSIDE FACE OF ALL BEARERS MUST REMAIN FREE FROM OBSTRUCTION
60	8MM RADIUS WINCH HOLE DRILLED THROUGH INSIDE ANGLE OF THE FOUR CORNER OUTRIGGERS

FIRST LIGHT NZ

TEAM NAME:	FIRSTLIGHT NZ
ADDRESS:	139 VIVIAN STREET TE ARO, WELLINGTON NEWZEALAND
CONTACT:	INFO@FIRSTLIGHTHOUSE.AC.NZ WWW.FIRSTLIGHTHOUSE.AC.NZ

CONSULTANTS

TENNENT + BROWN ARCHITECTS

DUNNING THORNTON CONSULTANTS LTD

LEAP AUSTRALASIA LTD

SOUTHERN PERSPECTIVES / SOLAR CITY

CLIENT

U.S. DEPARTMENT OF ENERGY

SOLAR DECATHLON 2011

WWW.SOLARDECATHLON.GOV

U.S. DEPARTMENT OF ENERGY SOLAR DECATHLON

MARK	DATE	DESCRIPTION
CN	11-01-11	FOR CONSTRUCTION

LOT NUMBER:	LOT NUMBER
DRAWN BY:	AUTHOR
CHECKED BY:	CHECKER
COPYRIGHT:	VICTORIA UNIVERSITY

SHEET TITLE

FOUNDATION PLAN

S-101

8/13/2011 8:49:22 AM

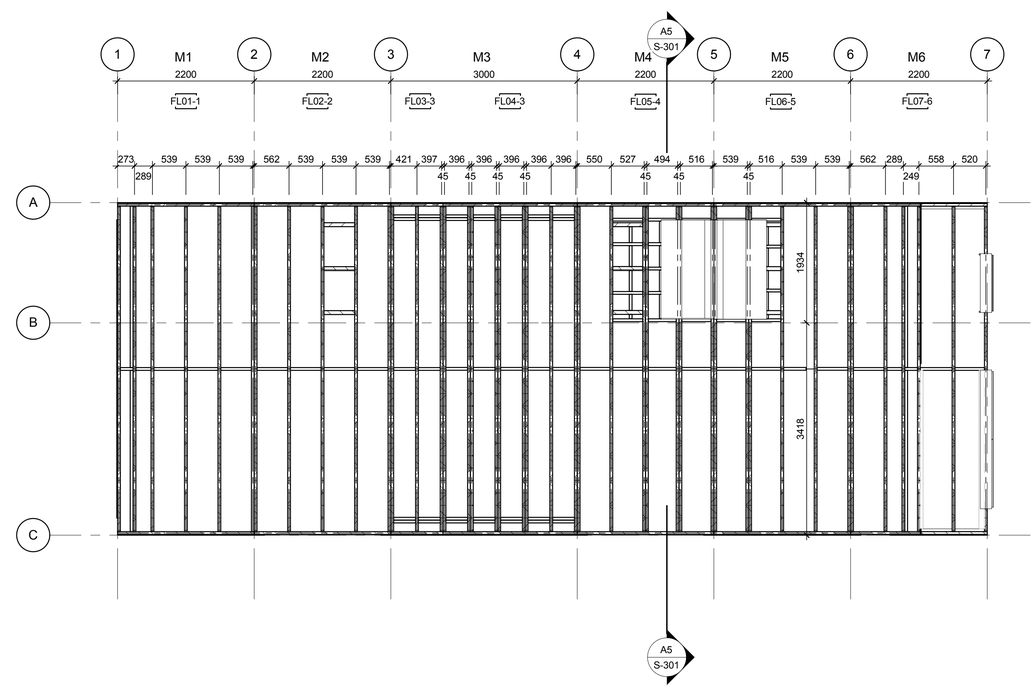

A1 FLOOR FRAMING PLAN
1 : 48

0 2' 4' 8'

GENERAL SHEET NOTES

REFERENCE KEYNOTES

SHEET KEYNOTES

FIRST LIGHT NZ

TEAM NAME:	FIRSTLIGHT NZ
ADDRESS:	139 VIVIAN STREET TE ARO, WELLINGTON NEWZEALAND
CONTACT:	INFO@FIRSTLIGHTHOUSE.AC.NZ WWW.FIRSTLIGHTHOUSE.AC.NZ

CONSULTANTS

TENNENT + BROWN ARCHITECTS
DUNNING THORNTON CONSULTANTS LTD
LEAP AUSTRALASIA LTD
SOUTHERN PERSPECTIVES / SOLAR CITY

CLIENT

U.S. DEPARTMENT OF ENERGY
SOLAR DECATHLON 2011
WWW.SOLARDECATHLON.GOV

U.S. DEPARTMENT OF ENERGY SOLAR DECATHLON

MARK	DATE	DESCRIPTION
CN	11-01-11	FOR CONSTRUCTION

LOT NUMBER:	LOT NUMBER
DRAWN BY:	AUTHOR
CHECKED BY:	CHECKER
COPYRIGHT:	VICTORIA UNIVERSITY

SHEET TITLE

FLOOR FRAMING PLAN

S-102

8/13/2011 8:49:26 AM

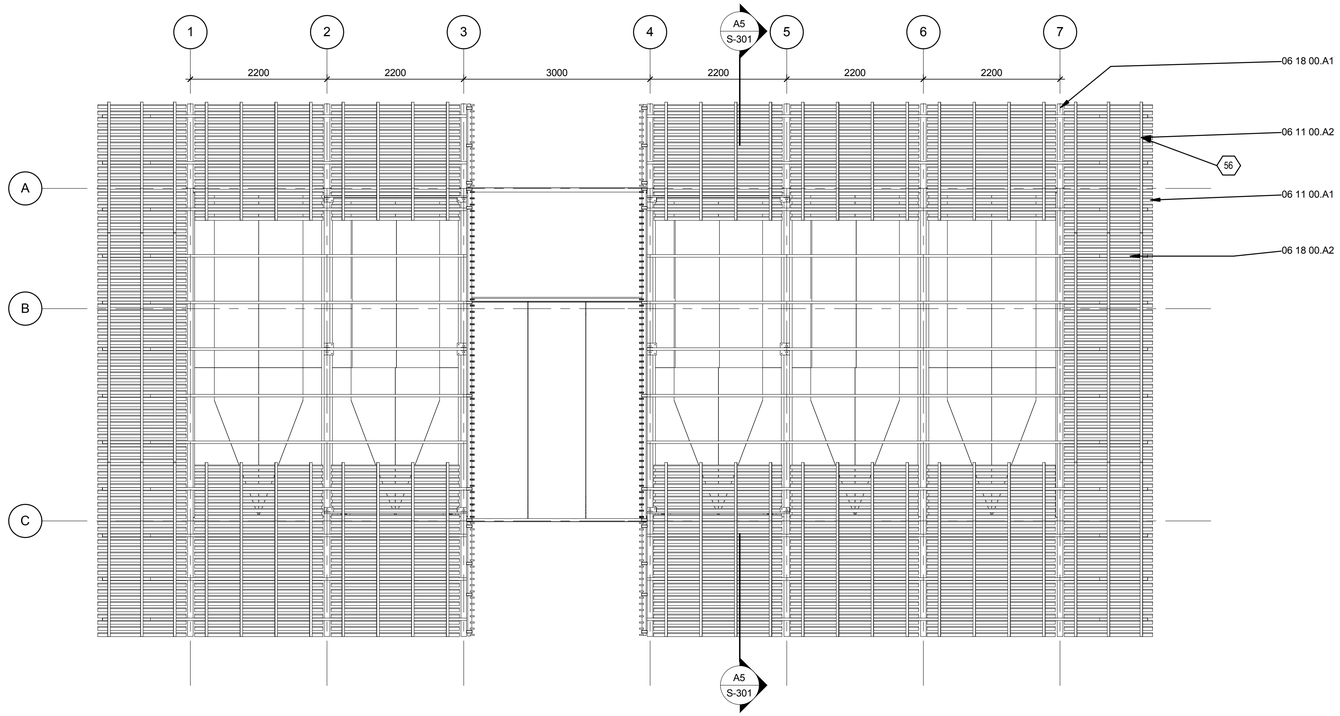

C2 CANOPY FRAMING PLAN

1 : 48

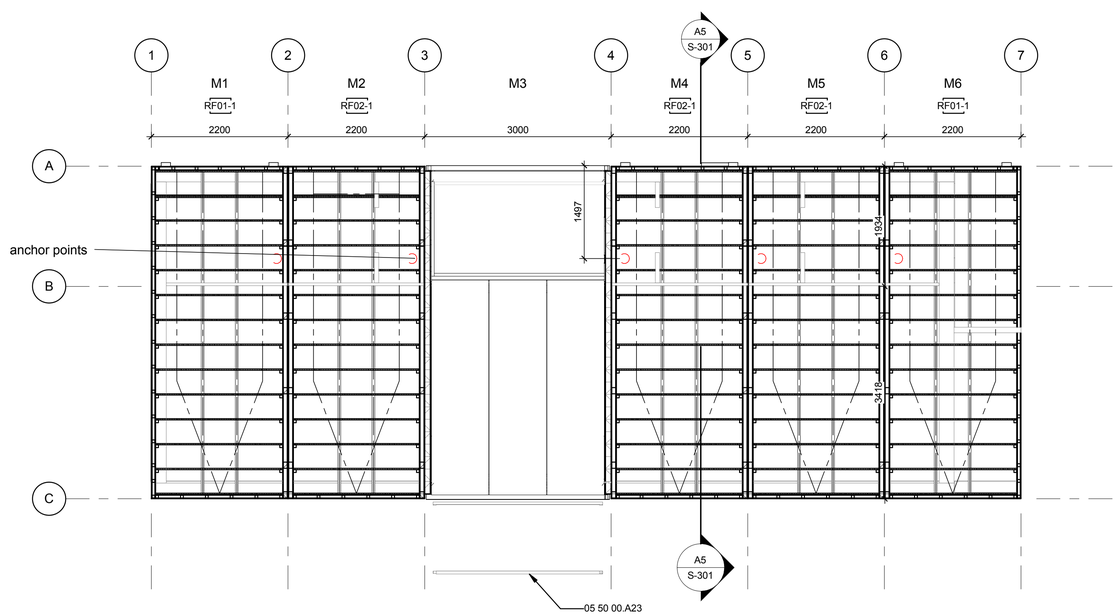

A2 ROOF FRAMING PLAN

1 : 48

GENERAL SHEET NOTES

REFERENCE KEYNOTES

05 50 00.A23	80 X 40 X 6 ALUMINIUM RHS
06 11 00.A1	75X19MM CEDAR SLATS AT 100MM CENTRES FIXED TO 65X35MM BATTENS. CONSTRUCTED IN PANELISED SYSTEM FOR ONSITE ASSEMBLY.
06 11 00.A2	90 X 45MM TIMBER SUPPORT STUD
06 18 00.A1	318X90MM GLUE-LAMINATED TIMBER BEAM SPANNING BETWEEN COLUMNS, TAPERING TO 135X90 @ CANTILEVERED ENDS. REFER FABRICATION DRAWINGS.
06 18 00.A2	135X42MM GLULAM GL8 RAFTERS AT 750MM NOM. CENTRES SPANNIG FULL LENGTH OF CANOPY, TAPERING TO 70X42MM @ CANTILEVERED END. REFER FABRICATION DRAWINGS.

SHEET KEYNOTES

56	CONSTRUCTED IN PANELIZED SYSTEM FOR ONSITE ASSEMBLY

FIRST LIGHT NZ

TEAM NAME:	FIRSTLIGHT NZ
ADDRESS:	139 VIVIAN STREET TE ARO, WELLINGTON NEWZEALAND
CONTACT:	INFO@FIRSTLIGHTHOUSE.AC.NZ WWW.FIRSTLIGHTHOUSE.AC.NZ

CONSULTANTS

TENNENT + BROWN ARCHITECTS

DUNNING THORNTON CONSULTANTS LTD

LEAP AUSTRALASIA LTD

SOUTHERN PERSPECTIVES / SOLAR CITY

CLIENT

U.S. DEPARTMENT OF ENERGY

SOLAR DECATHLON 2011

WWW.SOLARDECATHLON.GOV

U.S. DEPARTMENT OF ENERGY SOLAR DECATHLON

MARK	DATE	DESCRIPTION
CN	11-01-11	FOR CONSTRUCTION

LOT NUMBER:	LOT NUMBER
DRAWN BY:	AUTHOR
CHECKED BY:	CHECKER
COPYRIGHT:	VICTORIA UNIVERSITY

SHEET TITLE

ROOF FRAMING & CANOPY FRAMING PLANS

S-103

8/13/2011 8:49:33 AM

Foundation & Floor Plan

Dunning Thornton consultants
Ph: (64 4) 385-0019
Fax: (64 4) 385-0312
PO Box 27-153, Wellington, NZ
E-Mail: dtcwgtn@dunningthornton.co.nz

ISO 9001

SKETCH			
JOB NAME:	VUW Module for Solar Decathlon 2011		
JOB NO:	DRAWN BY:	DATE:	SKT NO:
6751	RGC	11.10	SK 01

REV A 23/11/10

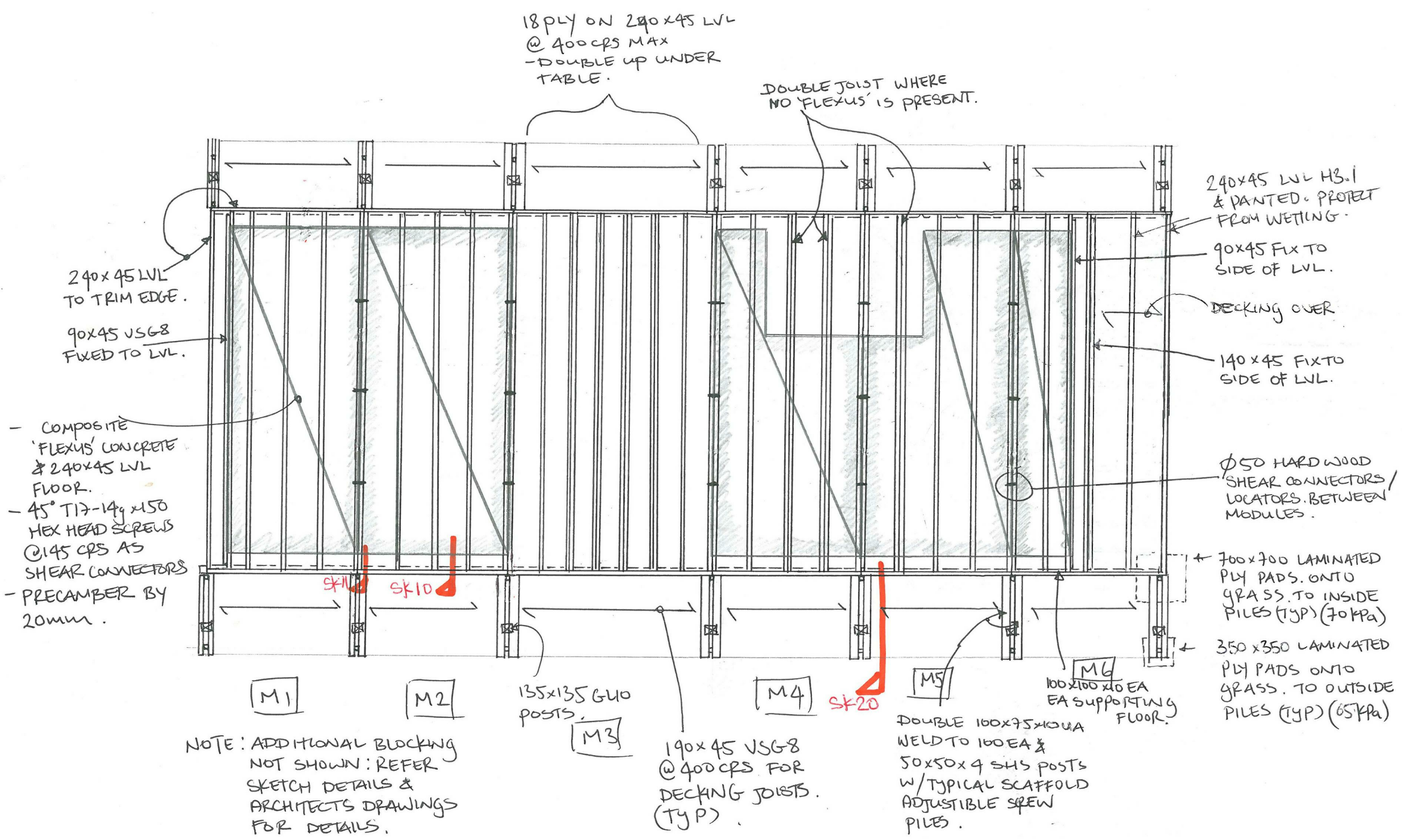

NOTE: ADDITIONAL BLOCKING NOT SHOWN: REFER SKETCH DETAILS & ARCHITECTS DRAWINGS FOR DETAILS.
: FLOOR DESIGNED FOR 3kPa LIVE LOAD.

10-09, MASTSKTHA3

GENERAL SHEET NOTES

REFERENCE KEYNOTES

SHEET KEYNOTES

FIRST LIGHT NZ

TEAM NAME:	FIRST LIGHT
ADDRESS:	139 VIVIAN STREET TE ARO, WELLINGTON NEWZEALAND
CONTACT:	ELINUTTALL@GMAIL.COM WWW.FIRSTLIGHTHOUSE.AC.NZ

CONSULTANTS

TENNENT + BROWN ARCHITECTS
DUNNING THORNTON CONSULTANTS LTD
LEAP AUSTRALASIA LTD
SOUTHERN PERSPECTIVES / SOLAR CITY

CLIENT
U.S. DEPARTMENT OF ENERGY
SOLAR DECATHLON 2011
WWW.SOLARDECATHLON.GOV

U.S. DEPARTMENT OF ENERGY SOLAR DECATHLON

MARK	DATE	DESCRIPTION
CN	11-01-11	FOR CONSTRUCTION

LOT NUMBER:	LOT NUMBER
DRAWN BY:	Author
CHECKED BY:	Checker
COPYRIGHT:	

SHEET TITLE
STRUCTURAL ENGINEERS' PLANS

S-201

8/13/2011 8:49:43 AM

Wall Bracing Plan

Dunning Thornton consultants
Ph: (64 4) 385-0019
Fax: (64 4) 385-0312
PO Box 27-153, Wellington, NZ
E-Mail: dtcwgtn@dunningthornton.co.nz

ISO 9001

SKETCH			
JOB NAME:	VUW Module for Solar Decathlon 2011		
JOB NO:	DRAWN BY:	DATE:	SKT NO:
6751	RGC	11.10	SK 02

REV A 23/11/10

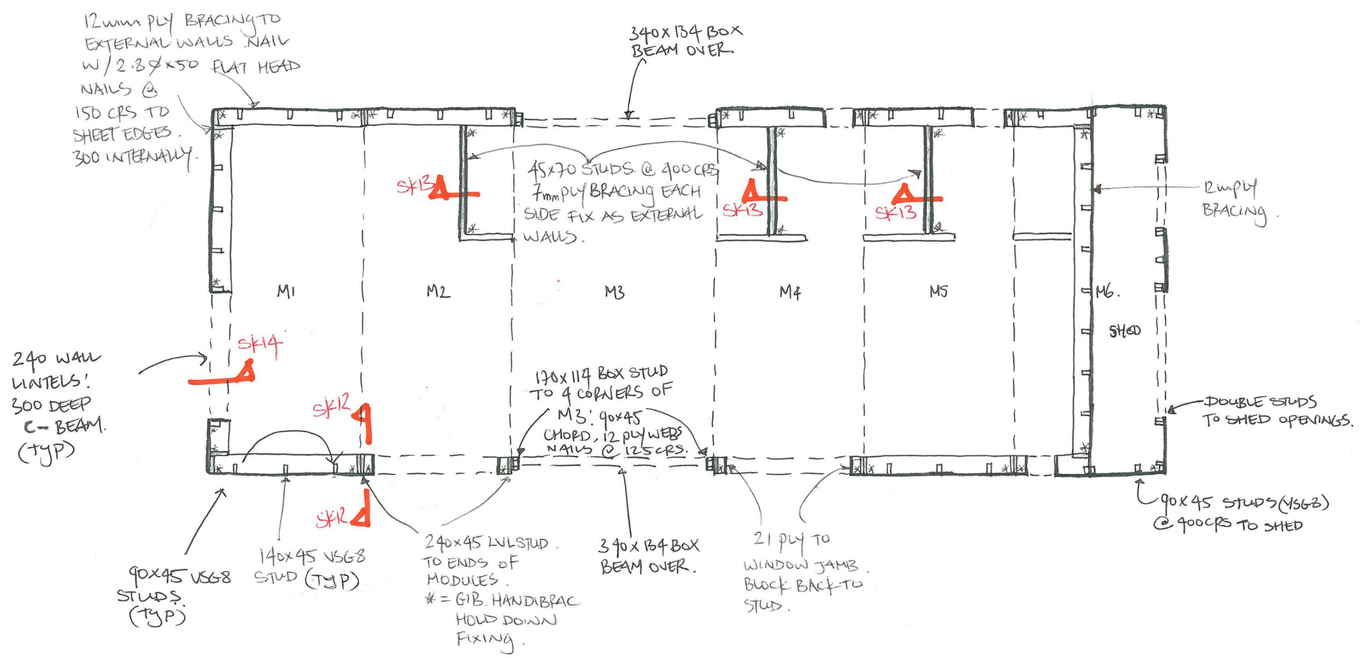

10-09, MASTSKTHA3

GENERAL SHEET NOTES

REFERENCE KEYNOTES

SHEET KEYNOTES

FIRST LIGHT NZ

TEAM NAME:	FIRST LIGHT
ADDRESS:	139 VIVIAN STREET TE ARO, WELLINGTON NEWZEALAND
CONTACT:	ELINUTTALL@GMAIL.COM WWW.FIRSTLIGHTHOUSE.AC.NZ

CONSULTANTS

TENNENT + BROWN ARCHITECTS
DUNNING THORNTON CONSULTANTS LTD
LEAP AUSTRALASIA LTD
SOUTHERN PERSPECTIVES / SOLAR CITY

CLIENT

U.S. DEPARTMENT OF ENERGY
SOLAR DECATHLON 2011
WWW.SOLARDECATHLON.GOV

U.S. DEPARTMENT OF ENERGY SOLAR DECATHLON

MARK	DATE	DESCRIPTION
CN	11-01-11	FOR CONSTRUCTION

LOT NUMBER:	LOT NUMBER
DRAWN BY:	Author
CHECKED BY:	Checker

COPYRIGHT:

SHEET TITLE

STRUCTURAL ENGINEERS' BRACING PLAN

S-202

8/13/2011 8:49:52 AM

Roof Plan

Dunning Thornton consultants
Ph: (64 4) 385-0019
Fax: (64 4) 385-0312
PO Box 27-153, Wellington, NZ
E-Mail: dtcwgtn@dunningthornton.co.nz

ISO 9001

SKETCH			
JOB NAME:	VUW Module for Solar Decathlon 2011		
JOB NO: 6751	DRAWN BY: RGC	DATE: 11.10	SKT NO: SK 03

REV A 23/11/10

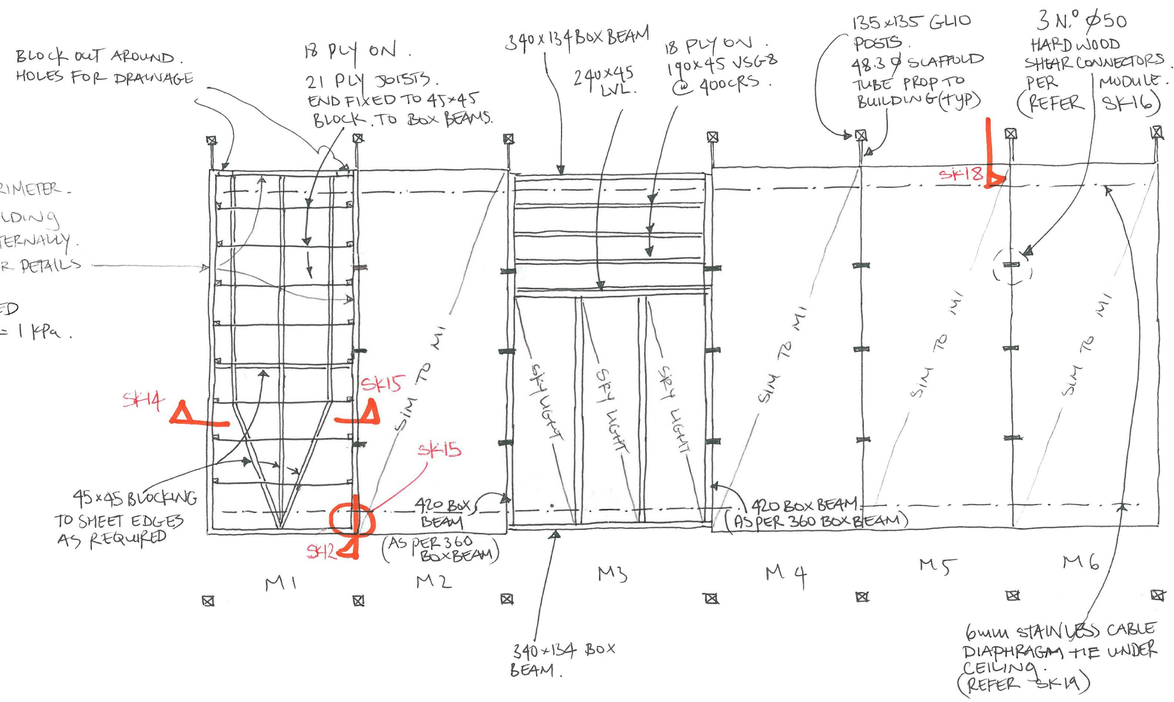

10-09. MASTSKTHA3

GENERAL SHEET NOTES

REFERENCE KEYNOTES

SHEET KEYNOTES

FIRST LIGHT NZ

TEAM NAME:	FIRST LIGHT
ADDRESS:	139 VIVIAN STREET TE ARO, WELLINGTON NEWZEALAND
CONTACT:	ELINUTTALL@GMAIL.COM WWW.FIRSTLIGHTHOUSE.AC.NZ

CONSULTANTS

TENNENT + BROWN ARCHITECTS
DUNNING THORNTON CONSULTANTS LTD
LEAP AUSTRALASIA LTD
SOUTHERN PERSPECTIVES / SOLAR CITY

CLIENT
U.S. DEPARTMENT OF ENERGY
SOLAR DECATHLON 2011
WWW.SOLARDECATHLON.GOV

U.S. DEPARTMENT OF ENERGY SOLAR DECATHLON

MARK	DATE	DESCRIPTION
CN	11-01-11	FOR CONSTRUCTION

LOT NUMBER:	LOT NUMBER
DRAWN BY:	Author
CHECKED BY:	Checker
COPYRIGHT:	

SHEET TITLE
STRUCTURAL ENGINEERS' ROOF PLAN

S-203

8/13/2011 8:50:01 AM

Canopy Roof Plan

Dunning Thornton consultants
Ph: (64 4) 385-0019
Fax: (64 4) 385-0312
PO Box 27-153, Wellington, NZ
E-Mail: dtcwgtn@dunningthornton.co.nz

ISO 9001

SKETCH			
JOB NAME:	VUW Module for Solar Decathlon 2011		
JOB NO:	DRAWN BY:	DATE:	SKT NO:
6751	RGC	11.10	SK 04

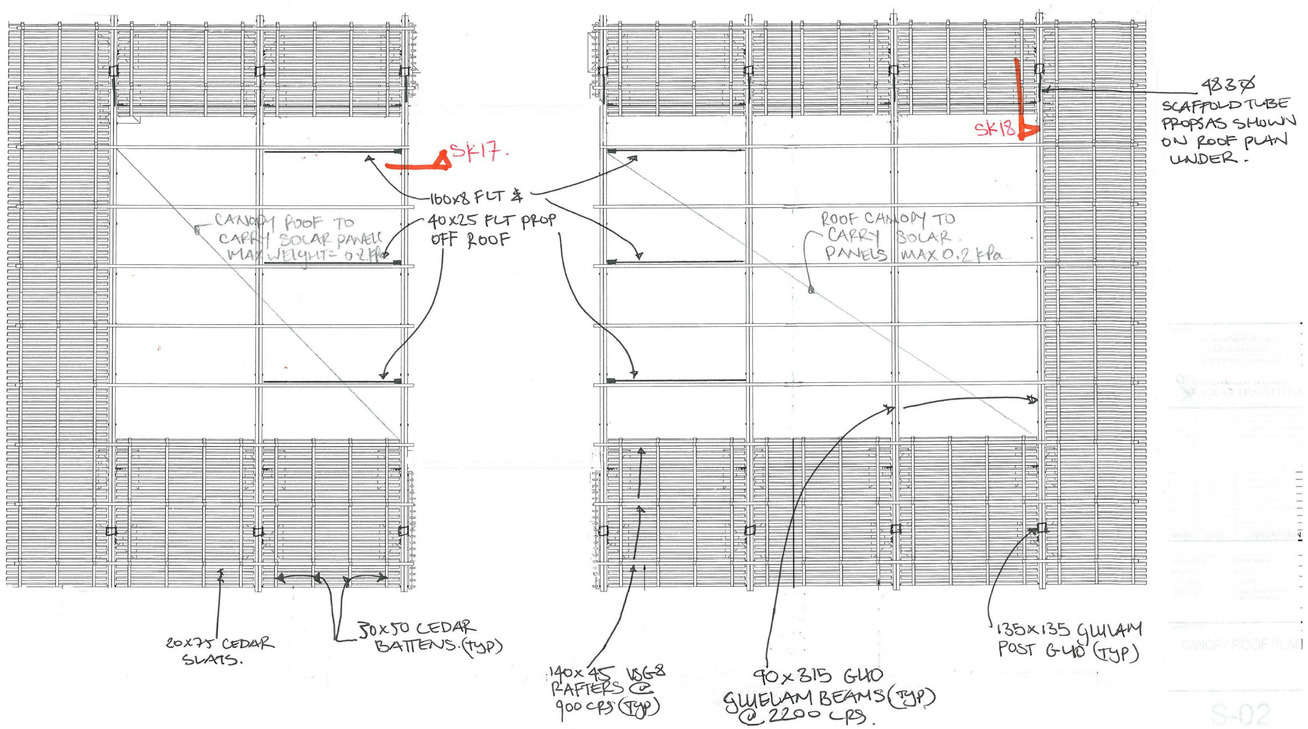

10-09, MASTSKTHA3

GENERAL SHEET NOTES

REFERENCE KEYNOTES

SHEET KEYNOTES

FIRST LIGHT NZ

TEAM NAME:	FIRST LIGHT
ADDRESS:	139 VIVIAN STREET TE ARO, WELLINGTON NEWZEALAND
CONTACT:	ELINUTTALL@GMAIL.COM WWW.FIRSTLIGHTHOUSE.AC.NZ

CONSULTANTS

TENNENT + BROWN ARCHITECTS
DUNNING THORNTON CONSULTANTS LTD
LEAP AUSTRALASIA LTD
SOUTHERN PERSPECTIVES / SOLAR CITY

CLIENT

U.S. DEPARTMENT OF ENERGY
SOLAR DECATHLON 2011
WWW.SOLARDECATHLON.GOV

U.S. DEPARTMENT OF ENERGY SOLAR DECATHLON

MARK	DATE	DESCRIPTION
CN	11-01-11	FOR CONSTRUCTION

LOT NUMBER:	LOT NUMBER
DRAWN BY:	Author
CHECKED BY:	Checker
COPYRIGHT:	

SHEET TITLE

STRUCTURAL ENGINEERS' CANOPY ROOF PLAN

S-204

8/13/2011 8:50:11 AM

Dunning Thornton Consultants Ltd
Consulting Engineers
Ph: (644) 385-0019
Fax: (644) 385-0312
PO Box 27-153, Wellington, NZ
E-Mail: dtcwgtn@dunningthornton

ISO 9001

SKETCH

JOB NAME: VUW SOLAR DECATHLON 2011

JOB NO	DRAWN BY	DATE	SKT NO.
6751	RGC	10/10	SK 10

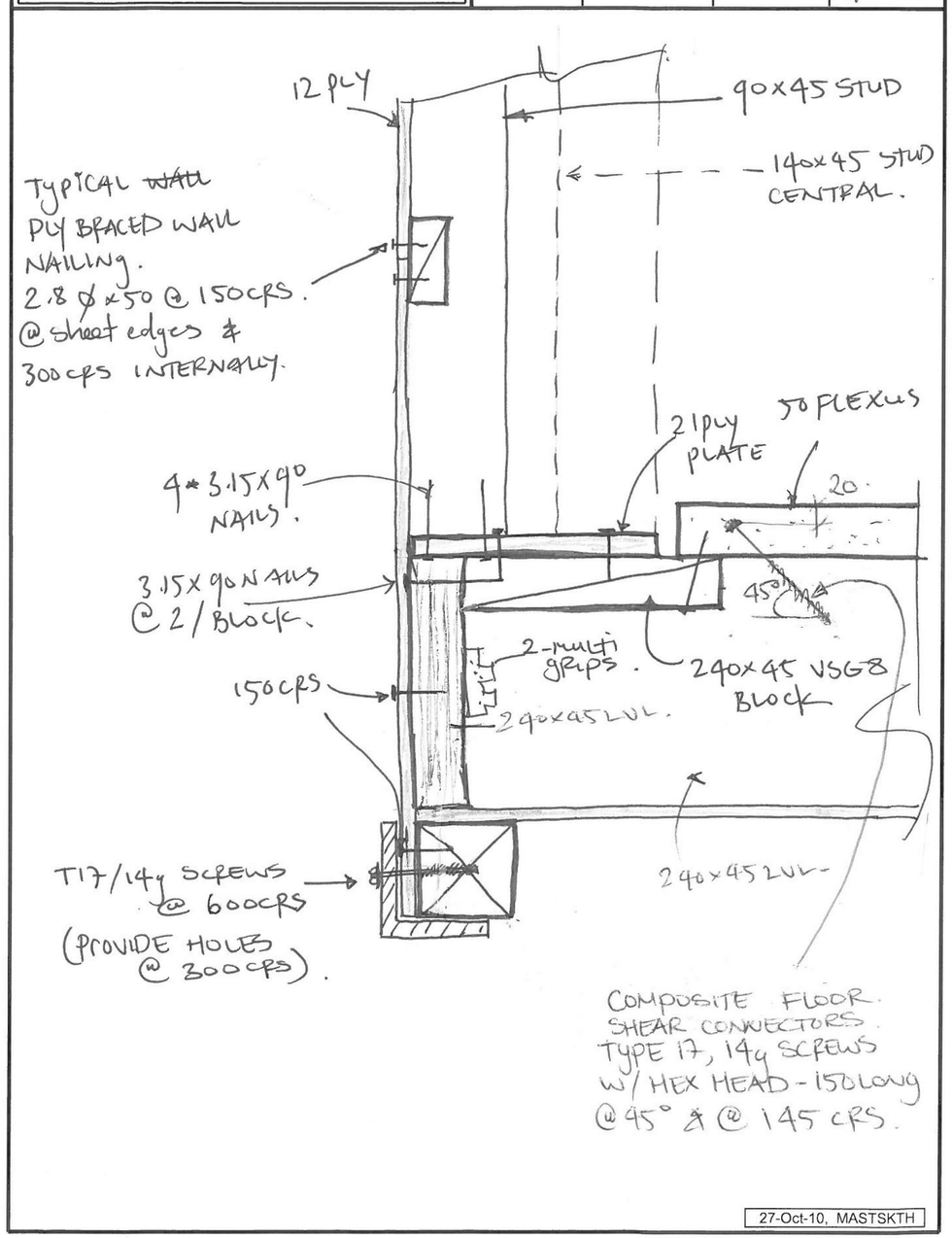

27-Oct-10, MASTSKTH

GENERAL SHEET NOTES

REFERENCE KEYNOTES

SHEET KEYNOTES

FIRST LIGHT NZ

TEAM NAME:	FIRST LIGHT
ADDRESS:	139 VIVIAN STREET TE ARO, WELLINGTON NEWZEALAND
CONTACT:	ELINUTTALL@GMAIL.COM WWW.FIRSTLIGHTHOUSE.AC.NZ

CONSULTANTS

TENNENT + BROWN ARCHITECTS
DUNNING THORNTON CONSULTANTS LTD
LEAP AUSTRALASIA LTD
SOUTHERN PERSPECTIVES / SOLAR CITY

CLIENT
U.S. DEPARTMENT OF ENERGY
SOLAR DECATHLON 2011
WWW.SOLARDECATHLON.GOV

U.S. DEPARTMENT OF ENERGY SOLAR DECATHLON

MARK	DATE	DESCRIPTION
CN	11-01-11	FOR CONSTRUCTION

LOT NUMBER:	LOT NUMBER
DRAWN BY:	Author
CHECKED BY:	Checker
COPYRIGHT:	

SHEET TITLE

STRUCTURAL ENGINEERS DETAIL SKETCHES

S-210

8/13/2011 8:50:18 AM

Dunning Thornton Consultants Ltd
Consulting Engineers
Ph: (644) 385-0019
Fax: (644) 385-0312
PO Box 27-153, Wellington, NZ
E-Mail: dtcwgtn@dunningthornto

ISO 9001

SKETCH

JOB NAME: VUW SOLAR DECATHLON 2011

JOB NO	DRAWN BY	DATE	SKT NO.
6751	RGC	10/10	SK 11

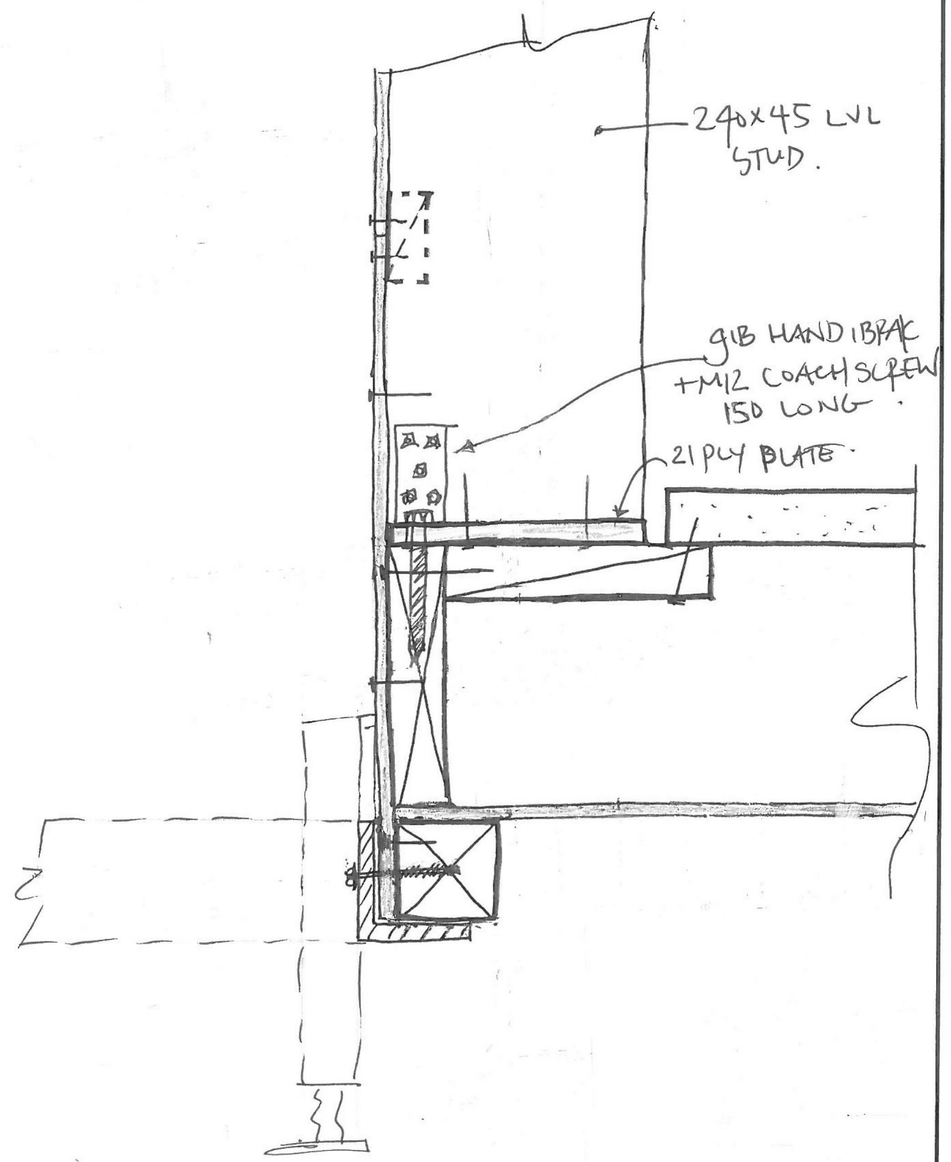

27-Oct-10, MASTSKTH

GENERAL SHEET NOTES

REFERENCE KEYNOTES

SHEET KEYNOTES

FIRST LIGHT NZ

TEAM NAME:	FIRST LIGHT
ADDRESS:	139 VIVIAN STREET TE ARO, WELLINGTON NEWZEALAND
CONTACT:	ELINUTTALL@GMAIL.COM WWW.FIRSTLIGHTHOUSE.AC.NZ

CONSULTANTS

TENNENT + BROWN ARCHITECTS
DUNNING THORNTON CONSULTANTS LTD
LEAP AUSTRALASIA LTD
SOUTHERN PERSPECTIVES / SOLAR CITY

CLIENT

U.S. DEPARTMENT OF ENERGY
SOLAR DECATHLON 2011
WWW.SOLARDECATHLON.GOV

U.S. DEPARTMENT OF ENERGY SOLAR DECATHLON

MARK	DATE	DESCRIPTION
CN	11-01-11	FOR CONSTRUCTION

LOT NUMBER:	LOT NUMBER
DRAWN BY:	Author
CHECKED BY:	Checker
COPYRIGHT:	

SHEET TITLE

STRUCTURAL ENGINEERS DETAIL SKETCHES

S-211

8/13/2011 8:50:24 AM

Dunning Thornton Consultants Ltd
Consulting Engineers
Ph: (644) 385-0019
Fax: (644) 385-0312
PO Box 27-153, Wellington, NZ
E-Mail: dtcwgtn@dunningthornton

ISO 9001 IAS-ANZ

SKETCH

JOB NAME: VUW USDE SOLAR DECATHLON 2011

JOB NO	DRAWN BY	DATE	SKT NO.
6751	RGC	10/10	SK 12

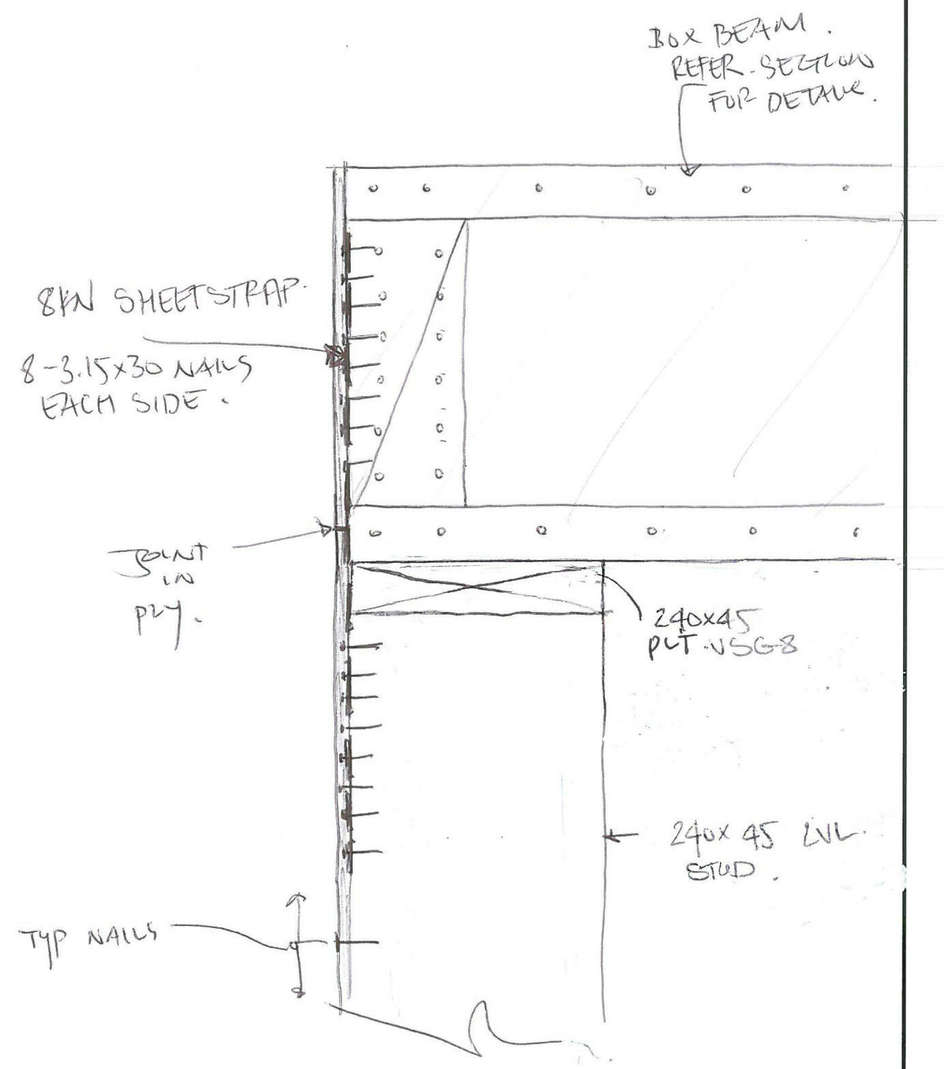

TYPICAL ELEVATION OF MODULE
@ ROOF.

21-Oct-10, MASTSKTH

GENERAL SHEET NOTES

REFERENCE KEYNOTES

SHEET KEYNOTES

FIRST LIGHT NZ

TEAM NAME:	FIRST LIGHT
ADDRESS:	139 VIVIAN STREET TE ARO, WELLINGTON NEWZEALAND
CONTACT:	ELINUTTALL@GMAIL.COM WWW.FIRSTLIGHTHOUSE.AC.NZ

CONSULTANTS

TENNENT + BROWN ARCHITECTS
DUNNING THORNTON CONSULTANTS LTD
LEAP AUSTRALASIA LTD
SOUTHERN PERSPECTIVES / SOLAR CITY

CLIENT

U.S. DEPARTMENT OF ENERGY
SOLAR DECATHLON 2011
WWW.SOLARDECATHLON.GOV

U.S. DEPARTMENT OF ENERGY SOLAR DECATHLON

MARK	DATE	DESCRIPTION
CN	11-01-11	FOR CONSTRUCTION

LOT NUMBER:	LOT NUMBER
DRAWN BY:	Author
CHECKED BY:	Checker

COPYRIGHT:

SHEET TITLE

STRUCTURAL ENGINEERS DETAIL SKETCHES

S-212

8/13/2011 8:50:29 AM

Dunning Thornton Consultants Ltd
Consulting Engineers
Ph: (644) 385-0019
Fax: (644) 385-0312
PO Box 27-153, Wellington, NZ
E-Mail: dtcwgtn@dunningthornto

ISO 9001

SKETCH

JOB NAME: VUW USDE SOLAR DECATHLON 2011

JOB NO	DRAWN BY	DATE	SKT NO.
6751	RGC	10/10	Sk 13

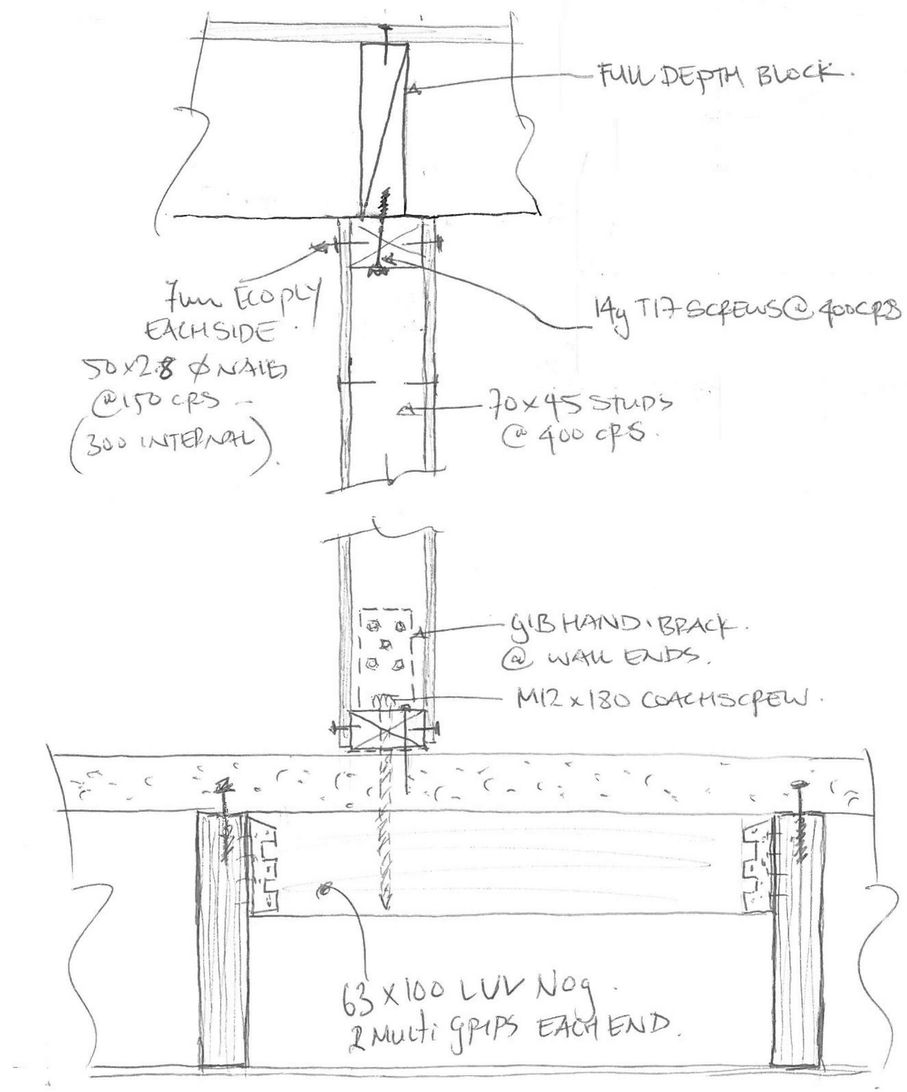

TYPICAL - ACROSS/INTERNAL BRACED WALL SECTION

21-Oct-10, MASTSKTH

GENERAL SHEET NOTES

REFERENCE KEYNOTES

SHEET KEYNOTES

FIRST LIGHT NZ

TEAM NAME:	FIRST LIGHT
ADDRESS:	139 VIVIAN STREET TE ARO, WELLINGTON NEWZEALAND
CONTACT:	ELINUTTALL@GMAIL.COM WWW.FIRSTLIGHTHOUSE.AC.NZ

CONSULTANTS

TENNENT + BROWN ARCHITECTS
DUNNING THORNTON CONSULTANTS LTD
LEAP AUSTRALASIA LTD
SOUTHERN PERSPECTIVES / SOLAR CITY

CLIENT

U.S. DEPARTMENT OF ENERGY
SOLAR DECATHLON 2011
WWW.SOLARDECATHLON.GOV

U.S. DEPARTMENT OF ENERGY SOLAR DECATHLON

MARK	DATE	DESCRIPTION
CN	11-01-11	FOR CONSTRUCTION

LOT NUMBER:	LOT NUMBER
DRAWN BY:	Author
CHECKED BY:	Checker
COPYRIGHT:	

SHEET TITLE

STRUCTURAL ENGINEERS DETAIL SKETCHES

S-213

8/13/2011 8:50:35 AM

Dunning Thornton Consultants Ltd
Consulting Engineers
Ph: (644) 385-0019
Fax: (644) 385-0312
PO Box 27-153, Wellington, NZ
E-Mail: dtcwgtn@dunningthornto

ISO 9001

SKETCH

JOB NAME: VUW JSDE SOLAR DECATHLON 2011

JOB NO	DRAWN BY	DATE	SKT NO.
6751	RGC	10/10	SK 14.

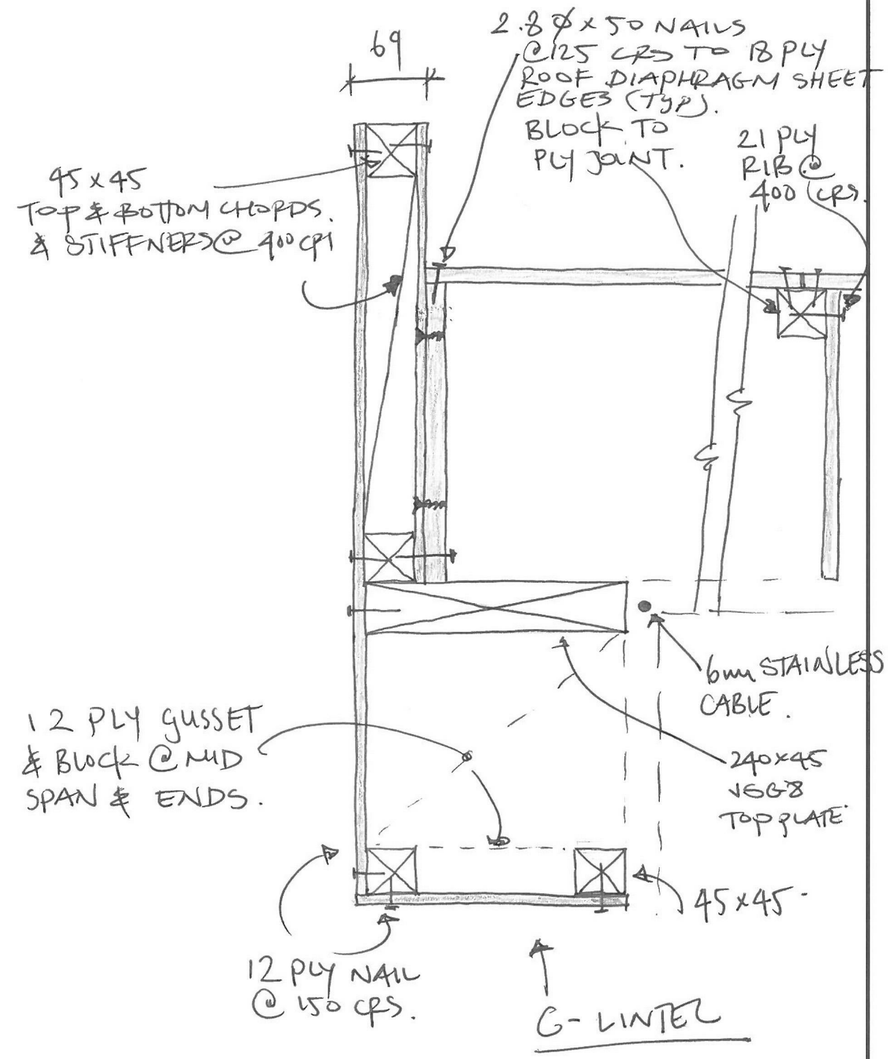

2-Nov-10, MASTSKTH

GENERAL SHEET NOTES

REFERENCE KEYNOTES

SHEET KEYNOTES

FIRST LIGHT NZ

TEAM NAME:	FIRST LIGHT
ADDRESS:	139 VIVIAN STREET TE ARO, WELLINGTON NEWZEALAND
CONTACT:	ELINUTTALL@GMAIL.COM WWW.FIRSTLIGHTHOUSE.AC.NZ

CONSULTANTS

TENNENT + BROWN ARCHITECTS
DUNNING THORNTON CONSULTANTS LTD
LEAP AUSTRALASIA LTD
SOUTHERN PERSPECTIVES / SOLAR CITY

CLIENT

U.S. DEPARTMENT OF ENERGY
SOLAR DECATHLON 2011
WWW.SOLARDECATHLON.GOV

U.S. DEPARTMENT OF ENERGY SOLAR DECATHLON

MARK	DATE	DESCRIPTION
CN	11-01-11	FOR CONSTRUCTION

LOT NUMBER:	LOT NUMBER
DRAWN BY:	Author
CHECKED BY:	Checker
COPYRIGHT:	

SHEET TITLE

STRUCTURAL ENGINEERS DETAIL SKETCHES

S-214

8/13/2011 8:50:41 AM

Dunning Thornton Consultants Ltd
Consulting Engineers
Ph: (644) 385-0019
Fax: (644) 385-0312
PO Box 27-153, Wellington, NZ
E-Mail: dtcwgtn@dunningthornto

ISO 9001

SKETCH

JOB NAME: VUW USDE SOLAR DECATHLON 2011

JOB NO	DRAWN BY	DATE	SKT NO.
6751	RGC	10/10	SK 15

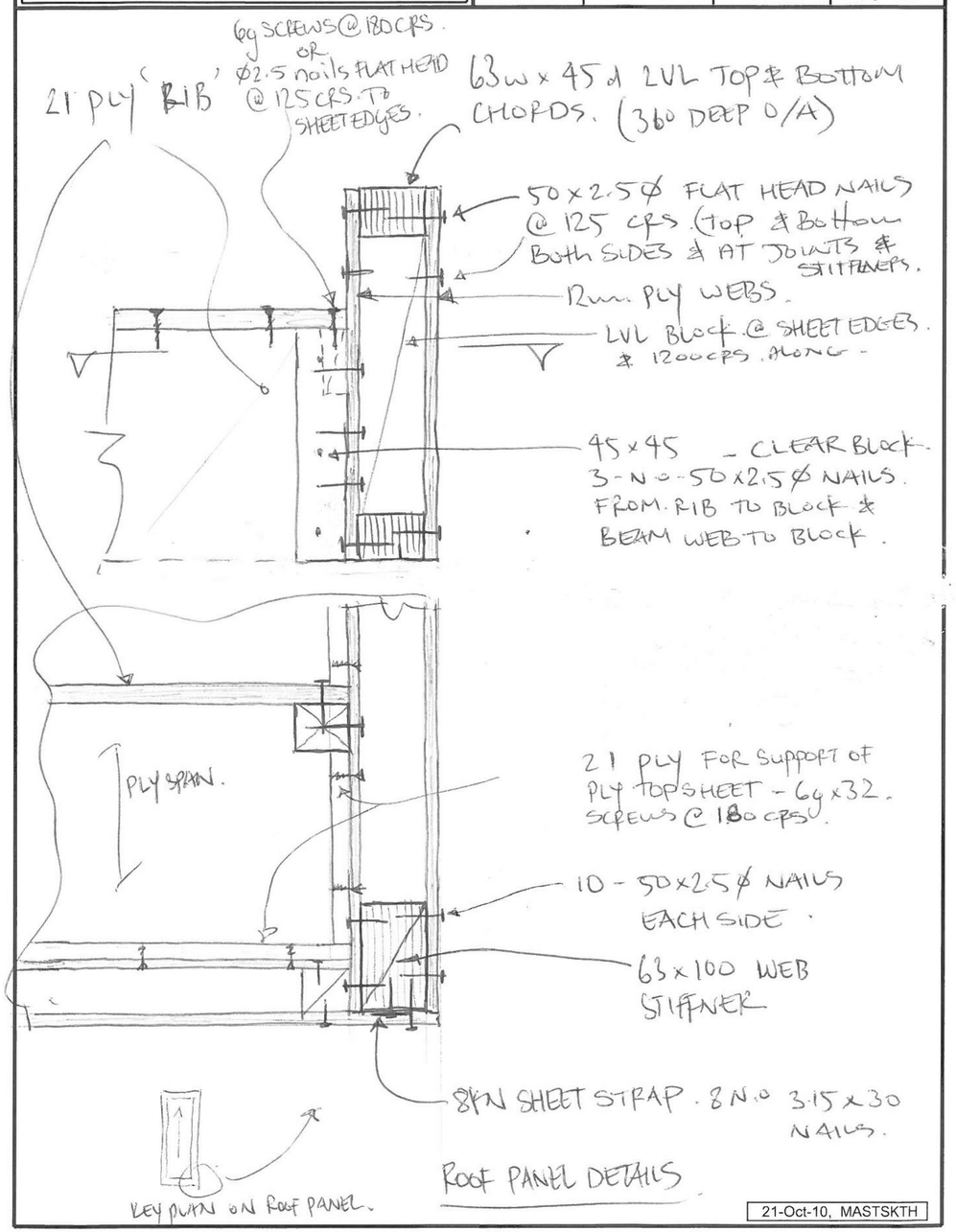

21-Oct-10, MASTSKTH

GENERAL SHEET NOTES

REFERENCE KEYNOTES

SHEET KEYNOTES

FIRST LIGHT NZ

TEAM NAME:	FIRST LIGHT
ADDRESS:	139 VIVIAN STREET TE ARO, WELLINGTON NEWZEALAND
CONTACT:	ELINUTTALL@GMAIL.COM WWW.FIRSTLIGHTHOUSE.AC.NZ

CONSULTANTS

TENNENT + BROWN ARCHITECTS
DUNNING THORNTON CONSULTANTS LTD
LEAP AUSTRALASIA LTD
SOUTHERN PERSPECTIVES / SOLAR CITY

CLIENT

U.S. DEPARTMENT OF ENERGY
SOLAR DECATHLON 2011
WWW.SOLARDECATHLON.GOV

U.S. DEPARTMENT OF ENERGY SOLAR DECATHLON

MARK	DATE	DESCRIPTION
CN	11-01-11	FOR CONSTRUCTION

LOT NUMBER:	LOT NUMBER
DRAWN BY:	Author
CHECKED BY:	Checker
COPYRIGHT:	

SHEET TITLE

STRUCTURAL ENGINEERS DETAIL SKETCHES

S-215

8/13/2011 8:50:48 AM

Dunning Thornton Consultants Ltd
Consulting Engineers
Ph: (644) 385-0019
Fax: (644) 385-0312
PO Box 27-153, Wellington, NZ
E-Mail: dtcwgtn@dunningthornto

ISO 9001

SKETCH

JOB NAME: VUW USDE SOLAR DECATHLON 2011

JOB NO	DRAWN BY	DATE	SKT NO.
6751	RGC	10/10	SK 16

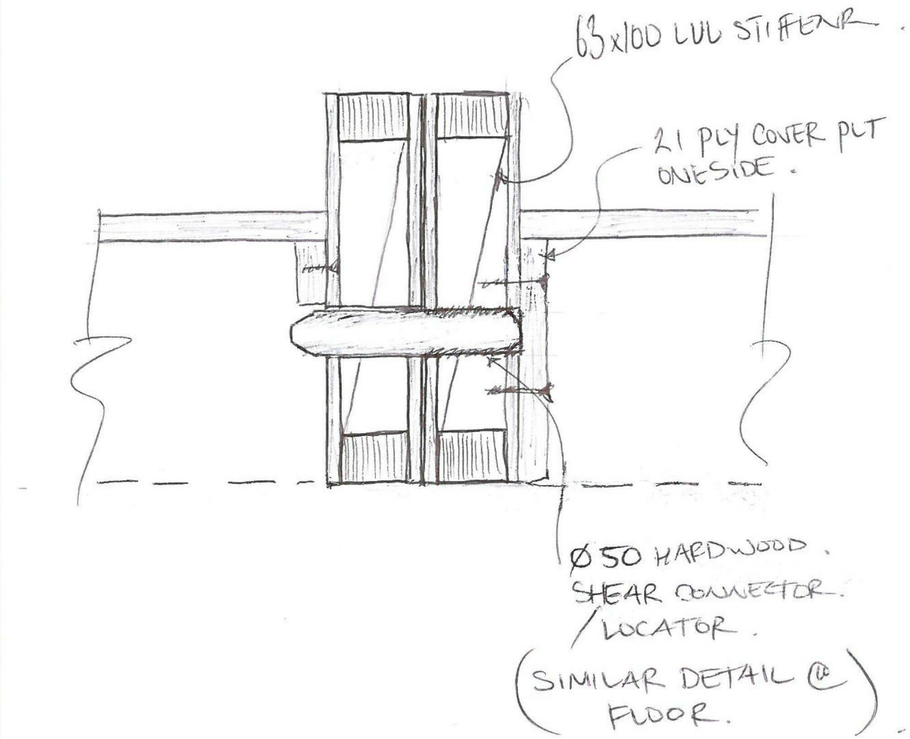

21-Oct-10, MASTSKTH

GENERAL SHEET NOTES

REFERENCE KEYNOTES

SHEET KEYNOTES

FIRST LIGHT NZ

TEAM NAME:	FIRST LIGHT
ADDRESS:	139 VIVIAN STREET TE ARO, WELLINGTON NEWZEALAND
CONTACT:	ELINUTTALL@GMAIL.COM WWW.FIRSTLIGHTHOUSE.AC.NZ

CONSULTANTS

TENNENT + BROWN ARCHITECTS
DUNNING THORNTON CONSULTANTS LTD
LEAP AUSTRALASIA LTD
SOUTHERN PERSPECTIVES / SOLAR CITY

CLIENT

U.S. DEPARTMENT OF ENERGY
SOLAR DECATHLON 2011
WWW.SOLARDECATHLON.GOV

U.S. DEPARTMENT OF ENERGY SOLAR DECATHLON

MARK	DATE	DESCRIPTION
CN	11-01-11	FOR CONSTRUCTION

LOT NUMBER:	LOT NUMBER
DRAWN BY:	Author
CHECKED BY:	Checker

COPYRIGHT:

SHEET TITLE

STRUCTURAL ENGINEERS DETAIL SKETCHES

S-216

8/13/2011 8:50:53 AM

Dunning Thornton Consultants Ltd
Consulting Engineers
Ph: (644) 385-0019
Fax: (644) 385-0312
PO Box 27-153, Wellington, NZ
E-Mail: dtcwgtn@dunningthornton

ISO 9001 IAS-ANZ

SKETCH

JOB NAME: VUW USDE SOLAR DECATHLON 2011

JOB NO	DRAWN BY	DATE	SKT NO.
6751	RGC	10/10	SK 17

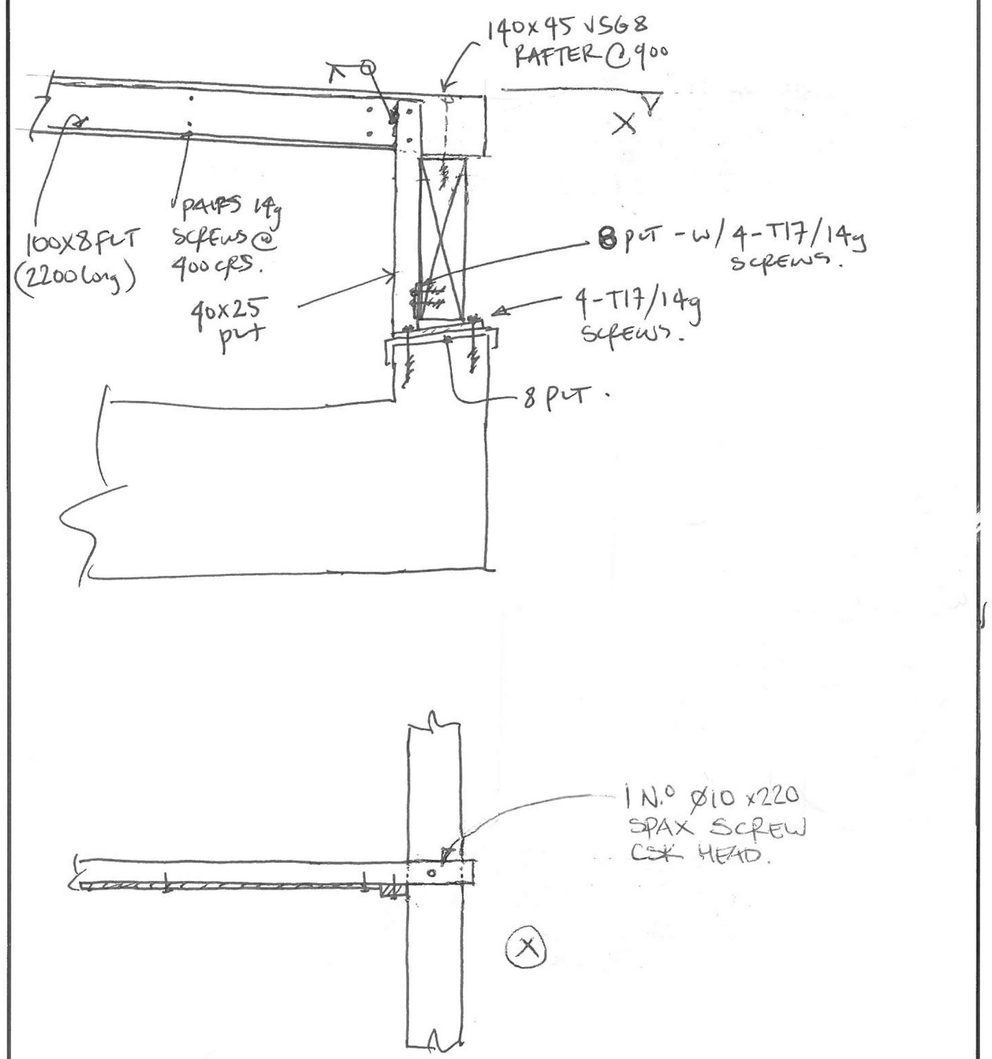

27-Oct-10, MASTSKTH

GENERAL SHEET NOTES

REFERENCE KEYNOTES

SHEET KEYNOTES

FIRST LIGHT NZ

TEAM NAME:	FIRST LIGHT
ADDRESS:	139 VIVIAN STREET TE ARO, WELLINGTON NEWZEALAND
CONTACT:	ELINUTTALL@GMAIL.COM WWW.FIRSTLIGHTHOUSE.AC.NZ

CONSULTANTS

TENNENT + BROWN ARCHITECTS
DUNNING THORNTON CONSULTANTS LTD
LEAP AUSTRALASIA LTD
SOUTHERN PERSPECTIVES / SOLAR CITY

CLIENT

U.S. DEPARTMENT OF ENERGY
SOLAR DECATHLON 2011
WWW.SOLARDECATHLON.GOV

U.S. DEPARTMENT OF ENERGY SOLAR DECATHLON

MARK	DATE	DESCRIPTION
CN	11-01-11	FOR CONSTRUCTION

LOT NUMBER:	LOT NUMBER
DRAWN BY:	Author
CHECKED BY:	Checker

COPYRIGHT:

SHEET TITLE

STRUCTURAL ENGINEERS DETAIL SKETCHES

S-217

8/13/2011 8:50:59 AM

Dunning Thornton Consultants Ltd
Consulting Engineers
Ph: (644) 385-0019
Fax: (644) 385-0312
PO Box 27-153, Wellington, NZ
E-Mail: dtcwgtn@dunningthornton

ISO 9001

SKETCH

JOB NAME: VWW SOLAR DECATHLON 2011

JOB NO	DRAWN BY	DATE	SKT NO.
6751	RGC	10/10	SK-18

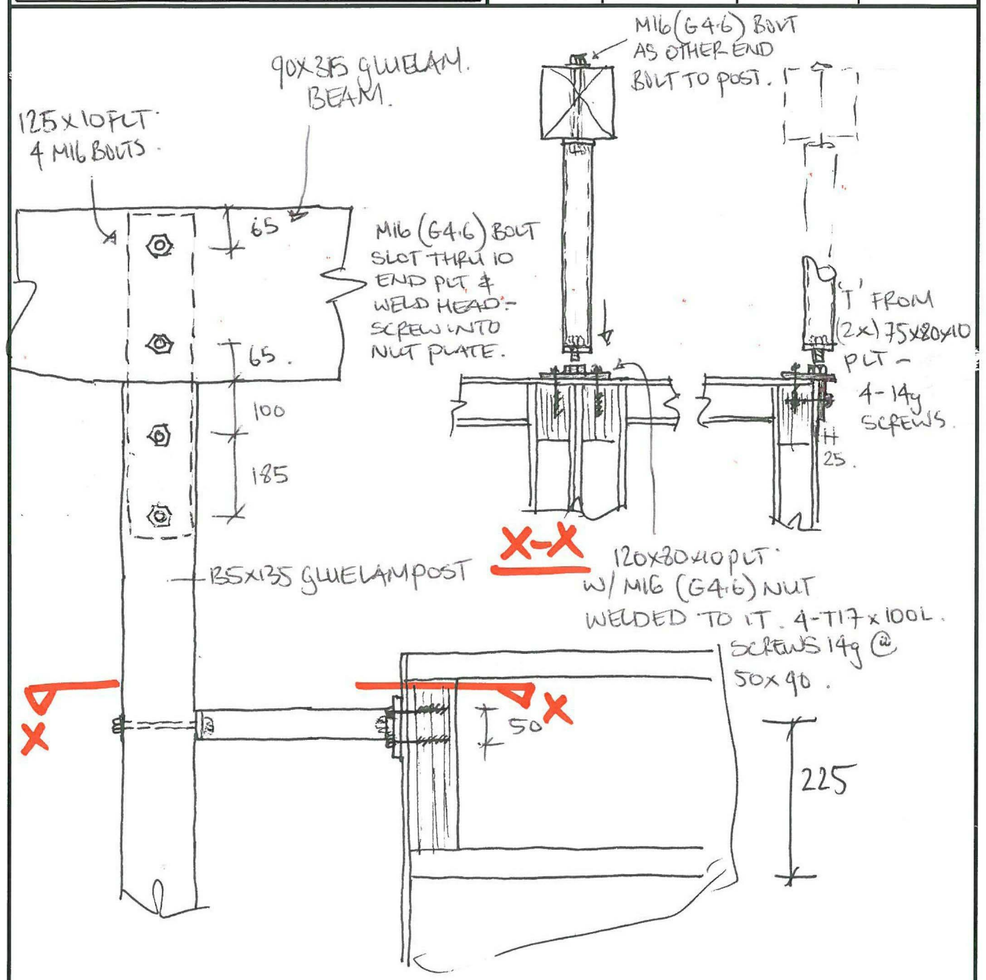

27-Oct-10, MASTSKTH

GENERAL SHEET NOTES

REFERENCE KEYNOTES

SHEET KEYNOTES

FIRST LIGHT NZ

TEAM NAME:	FIRST LIGHT
ADDRESS:	139 VIVIAN STREET TE ARO, WELLINGTON NEWZEALAND
CONTACT:	ELINUTTALL@GMAIL.COM WWW.FIRSTLIGHTHOUSE.AC.NZ

CONSULTANTS

TENNENT + BROWN ARCHITECTS
DUNNING THORNTON CONSULTANTS LTD
LEAP AUSTRALASIA LTD
SOUTHERN PERSPECTIVES / SOLAR CITY

CLIENT

U.S. DEPARTMENT OF ENERGY
SOLAR DECATHLON 2011
WWW.SOLARDECATHLON.GOV

U.S. DEPARTMENT OF ENERGY SOLAR DECATHLON

MARK	DATE	DESCRIPTION
CN	11-01-11	FOR CONSTRUCTION

LOT NUMBER:	LOT NUMBER
DRAWN BY:	Author
CHECKED BY:	Checker
COPYRIGHT:	

SHEET TITLE

STRUCTURAL ENGINEERS DETAIL SKETCHES

S-218

8/13/2011 8:51:05 AM

Dunning Thornton Consultants Ltd
Consulting Engineers
Ph: (644) 385-0019
Fax: (644) 385-0312
PO Box 27-153, Wellington, NZ
E-Mail: dtcwgtn@dunningthornto

ISO 9001

SKETCH

JOB NAME: VUW USDE SOLAR DECATHLON 2011

JOB NO	DRAWN BY	DATE	SKT NO.
6751	RGC	10/10	Sk 19

DIAPHRAGM

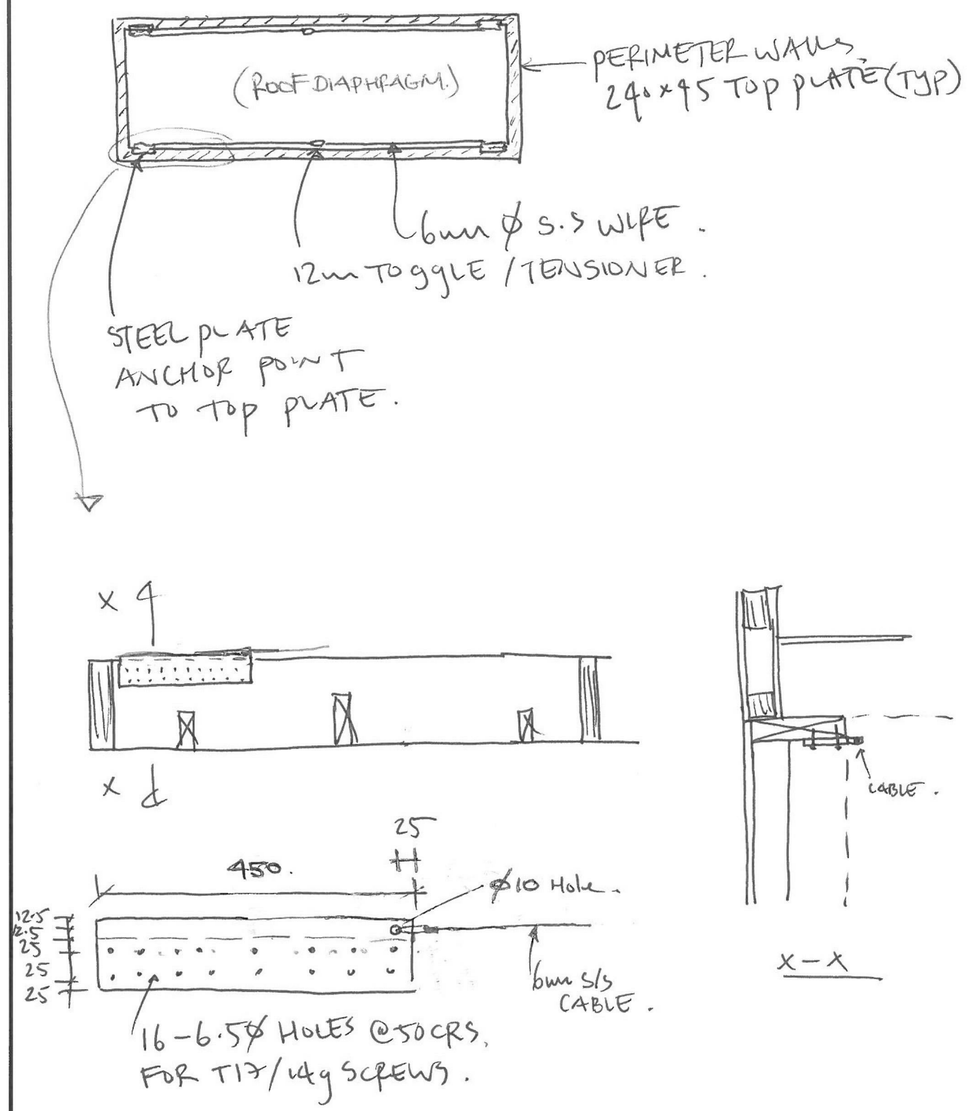

27-Oct-10, MASTSKTH

GENERAL SHEET NOTES

REFERENCE KEYNOTES

SHEET KEYNOTES

FIRST LIGHT NZ

TEAM NAME:	FIRST LIGHT
ADDRESS:	139 VIVIAN STREET TE ARO, WELLINGTON NEWZEALAND
CONTACT:	ELINUTTALL@GMAIL.COM WWW.FIRSTLIGHTHOUSE.AC.NZ

CONSULTANTS

TENNENT + BROWN ARCHITECTS
DUNNING THORNTON CONSULTANTS LTD
LEAP AUSTRALASIA LTD
SOUTHERN PERSPECTIVES / SOLAR CITY

CLIENT

U.S. DEPARTMENT OF ENERGY
SOLAR DECATHLON 2011
WWW.SOLARDECATHLON.GOV

U.S. DEPARTMENT OF ENERGY SOLAR DECATHLON

MARK	DATE	DESCRIPTION
CN	11-01-11	FOR CONSTRUCTION

LOT NUMBER:	LOT NUMBER
DRAWN BY:	Author
CHECKED BY:	Checker
COPYRIGHT:	

SHEET TITLE

STRUCTURAL ENGINEERS SKETCHES

S-219

8/13/2011 8:51:11 AM

Dunning Thornton Consultants Ltd
Consulting Engineers
Ph: (644) 385-0019
Fax: (644) 385-0312
PO Box 27-153, Wellington, NZ
E-Mail: dtcwgtn@dunningthornton

ISO 9001

SKETCH

JOB NAME: VUW		USDE SOLAR DECATHLON 2011	
JOB NO	DRAWN BY	DATE	SKT NO.
6751	RGC	10/10	SK 20

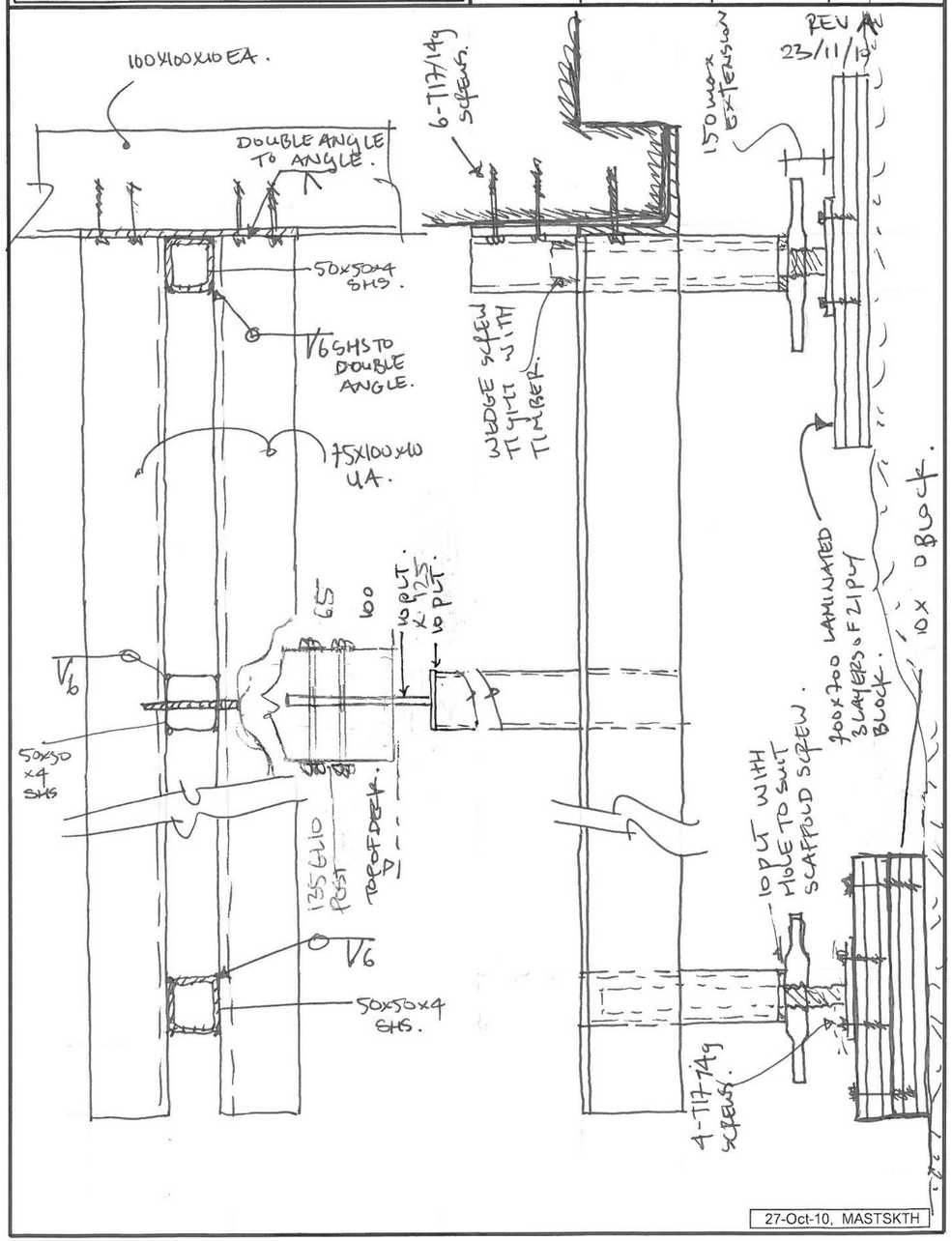

GENERAL SHEET NOTES

REFERENCE KEYNOTES

SHEET KEYNOTES

FIRST LIGHT NZ

TEAM NAME:	FIRST LIGHT
ADDRESS:	139 VIVIAN STREET TE ARO, WELLINGTON NEWZEALAND
CONTACT:	ELINUTTALL@GMAIL.COM WWW.FIRSTLIGHTHOUSE.AC.NZ

CONSULTANTS

TENNENT + BROWN ARCHITECTS
DUNNING THORNTON CONSULTANTS LTD
LEAP AUSTRALASIA LTD
SOUTHERN PERSPECTIVES / SOLAR CITY

CLIENT

U.S. DEPARTMENT OF ENERGY
SOLAR DECATHLON 2011
WWW.SOLARDECATHLON.GOV

U.S. DEPARTMENT OF ENERGY SOLAR DECATHLON

MARK	DATE	DESCRIPTION
CN	11-01-11	FOR CONSTRUCTION

LOT NUMBER:	LOT NUMBER
DRAWN BY:	Author
CHECKED BY:	Checker
COPYRIGHT:	

SHEET TITLE

STRUCTURAL ENGINEERS DETAIL SKETCHES

S-220

8/13/2011 8:51:17 AM

Dunning Thornton Consultants Ltd
Consulting Engineers
Ph: (644) 385-0019
Fax: (644) 385-0312
PO Box 27-153, Wellington, NZ
E-Mail: dtcwgtn@dunningthornto

ISO 9001

SKETCH

JOB NAME: VUW BACH for USDE SOLAR DECATHLON 2011			
JOB NO	DRAWN BY	DATE	SKT NO.
6751	RGC	11/10	SK21

SUB FRAME - LEG EXTENDER.

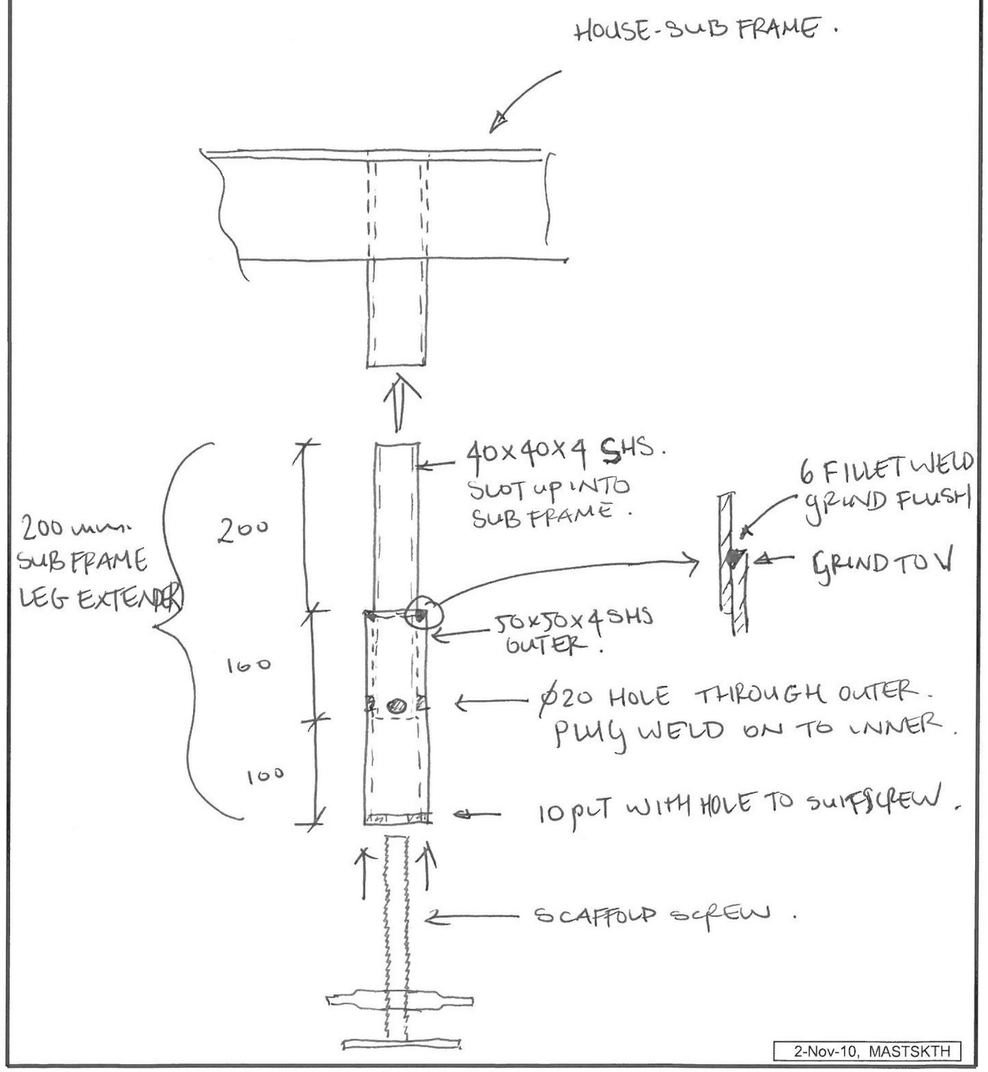

2-Nov-10, MASTSKTH

GENERAL SHEET NOTES

REFERENCE KEYNOTES

SHEET KEYNOTES

FIRST LIGHT NZ

TEAM NAME:	FIRST LIGHT
ADDRESS:	139 VIVIAN STREET TE ARO, WELLINGTON NEWZEALAND
CONTACT:	ELINUTTALL@GMAIL.COM WWW.FIRSTLIGHTHOUSE.AC.NZ

CONSULTANTS
TENNENT + BROWN ARCHITECTS
DUNNING THORNTON CONSULTANTS LTD
LEAP AUSTRALASIA LTD
SOUTHERN PERSPECTIVES / SOLAR CITY

CLIENT
U.S. DEPARTMENT OF ENERGY
SOLAR DECATHLON 2011
WWW.SOLARDECATHLON.GOV

U.S. DEPARTMENT OF ENERGY SOLAR DECATHLON

MARK	DATE	DESCRIPTION
CN	11-01-11	FOR CONSTRUCTION

LOT NUMBER:	LOT NUMBER
DRAWN BY:	Author
CHECKED BY:	Checker
COPYRIGHT:	

SHEET TITLE
STRUCTURAL ENGINEERS DETAIL SKETCHES

S-221

8/13/2011 8:51:23 AM

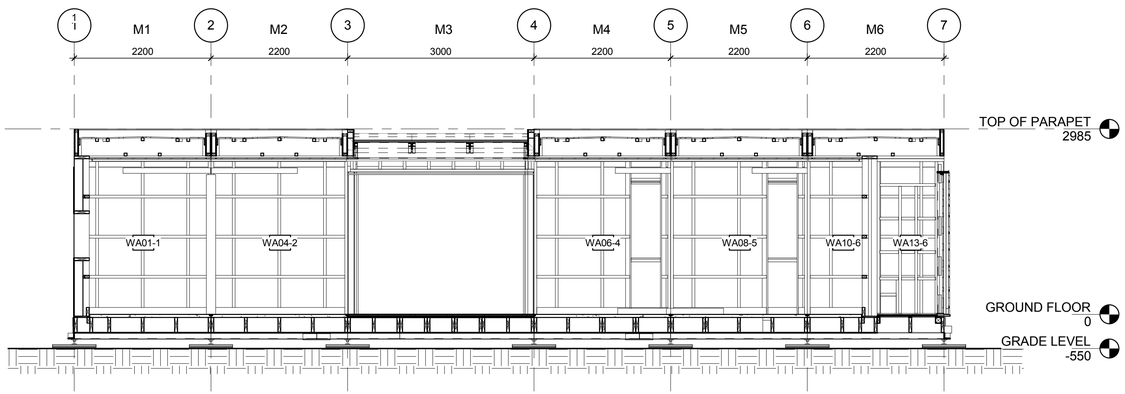

C1 FRAMING SECTION NORTH
1 : 48

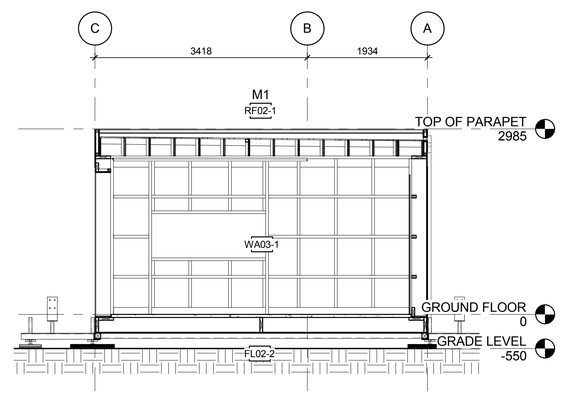

C5 FRAMING SECTION WEST
1 : 48

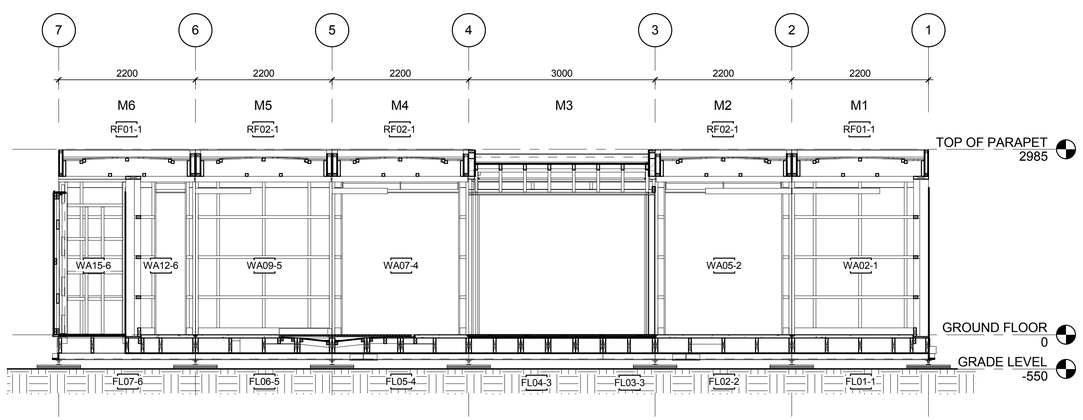

A1 FRAMING SECTION SOUTH
1 : 48

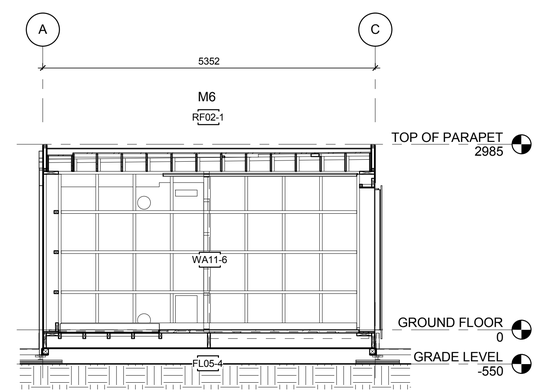

A5 FRAMING SECTION EAST
1 : 48

GENERAL SHEET NOTES

REFERENCE KEYNOTES

SHEET KEYNOTES

FIRST LIGHT NZ

TEAM NAME:	FIRST LIGHT
ADDRESS:	139 VIVIAN STREET TE ARO, WELLINGTON NEWZEALAND
CONTACT:	ELINUTTALL@GMAIL.COM WWW.FIRSTLIGHTHOUSE.AC.NZ

CONSULTANTS

TENNENT + BROWN ARCHITECTS
DUNNING THORNTON CONSULTANTS LTD
LEAP AUSTRALASIA LTD
SOUTHERN PERSPECTIVES / SOLAR CITY

CLIENT

U.S. DEPARTMENT OF ENERGY
SOLAR DECATHLON 2011
WWW.SOLARDECATHLON.GOV

U.S. DEPARTMENT OF ENERGY SOLAR DECATHLON

MARK	DATE	DESCRIPTION
CN	11-01-11	FOR CONSTRUCTION

LOT NUMBER:	LOT NUMBER
DRAWN BY:	Author
CHECKED BY:	Checker
COPYRIGHT:	

SHEET TITLE

PREFABRICATED PANEL LOCATION SECTIONS

S-301

8/13/2011 8:51:30 AM

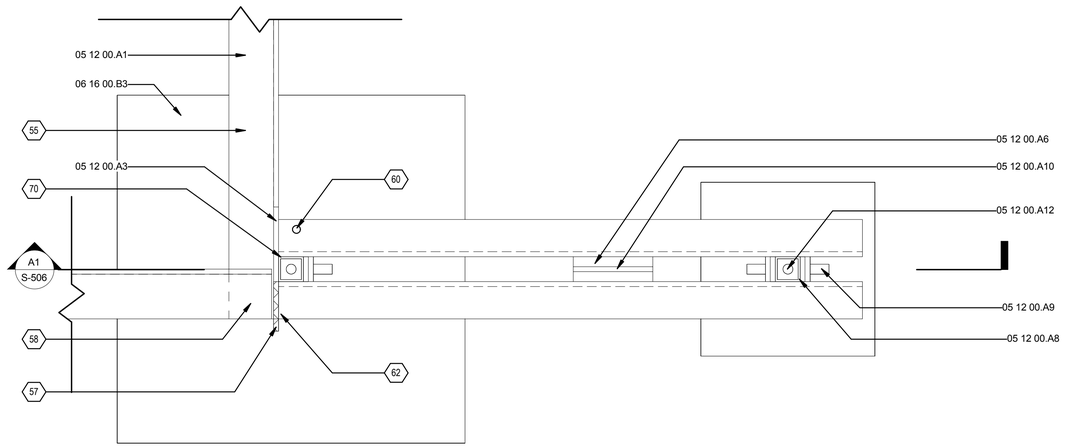

D1 OUTRIGGER PLAN
1 : 6

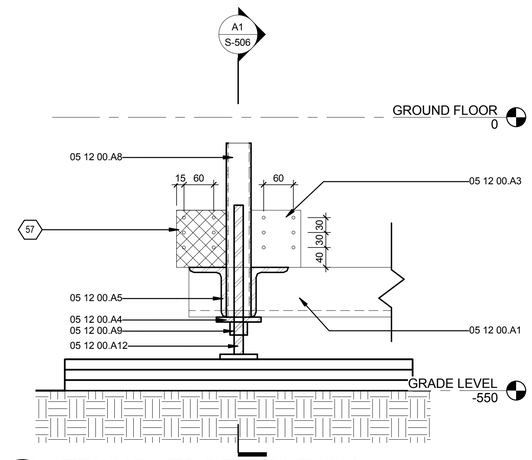

D5 TRANSVERSE SECTION
1 : 6

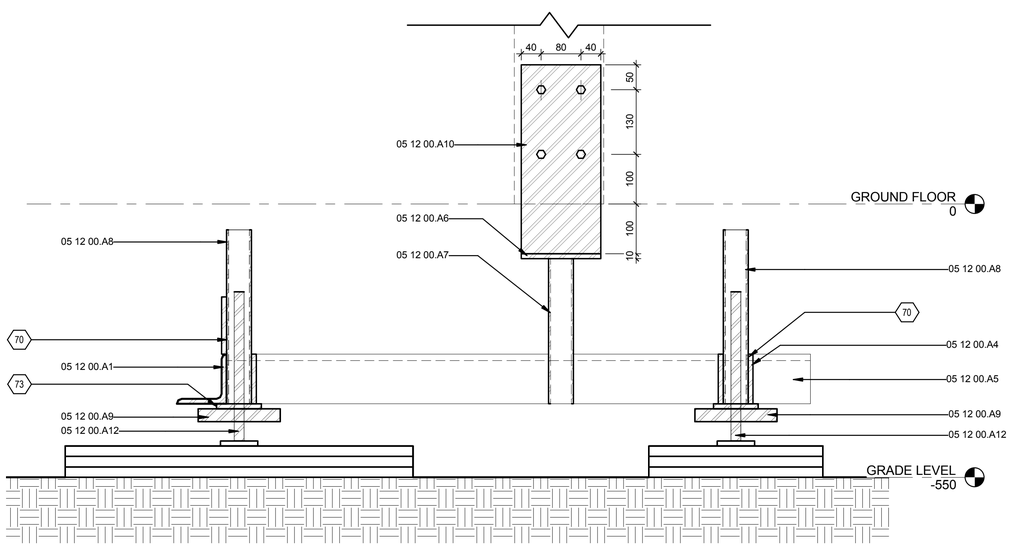

A1 LONGITUDINAL SECTION
1 : 6

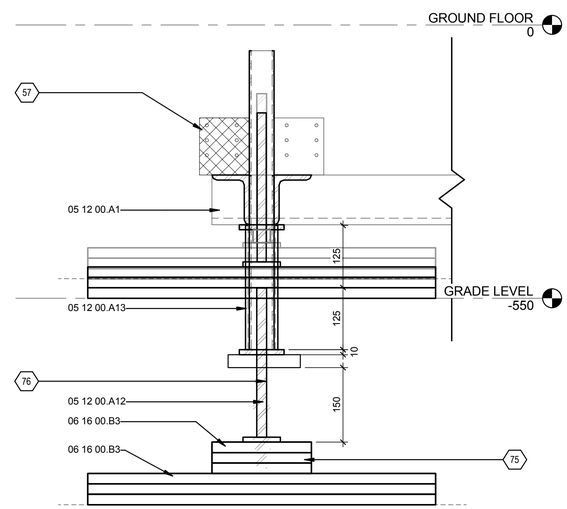

A5 FOOTING EXTENSION
1 : 6

GENERAL SHEET NOTES

REFERENCE KEYNOTES

05 12 00.A1	100X100X10MM EA FOUNDATION BEARER
05 12 00.A3	10MM STEEL CONNECTION PLATE WELDED TO FOUNDATION BEARER
05 12 00.A4	10MM STEEL PLATE
05 12 00.A5	75X100X10MM UA FOUNDATION OUTRIGGER
05 12 00.A6	160X50X10MM STEEL SUPPORT PLATE
05 12 00.A7	50X50X4MM SHS CANOPY POST SUPPORT
05 12 00.A8	50X50X4MM SHS STEEL ADJUSTABLE INSERT
05 12 00.A9	STEEL SCAFFOLD SCREW JACK NUT
05 12 00.A10	230X160X10MM STEEL POST CONNECTION PLATE
05 12 00.A12	ADJUSTABLE STEEL SCAFFOLD SCREW WITH 700X700MM PLYWOOD FOOTING. MAXIMUM VERTICAL DEVIATION 463MM
05 12 00.A13	65X65X5MM SHS STEEL FOUNDATION SLEEVE PACKER
06 16 00.B3	

SHEET KEYNOTES

55	INSIDE FACE OF ALL BEARERS MUST REMAIN FREE FROM OBSTRUCTION
57	HATCHED SECTION OF CONNECTION PLATE REMOVED FROM OUTSIDE EDGE OF THE FOUR CORNER OUTRIGGERS
58	BRACING STRUT BOLT FIXED THROUGH BOTTOM FLANGE TO BEARER INSIDE FACE OF STRUT MUST LINE UP WITH GRID LINE
60	8MM RADIUS WINCH HOLE DRILLED THROUGH INSIDE ANGLE OF THE FOUR CORNER OUTRIGGERS
62	OUTRIGGERS V-BUTT WELDED TO ANGLE BEARER
70	ADJUSTABLE INSERT TIGHT FITTED BETWEEN ANGLES AND WELDED PLATE
73	10MM THICK END PLATE WELDED TO ADJUSTABLE SLEEVE WITH CENTRE HOLE DRILLED TO SUIT SCAFFOLD SCREW
75	PLYWOOD BASE BUILT UP TO ACHIEVE REQUIRED HEIGHT
76	SCAFFOLD SCREW WITH 190MM COVER INSIDE SHS INSERT

FIRST LIGHT NZ

TEAM NAME: FIRSTLIGHT NZ
ADDRESS: 139 VIVIAN STREET TE ARO, WELLINGTON NEWZEALAND
CONTACT: INFO@FIRSTLIGHTHOUSE.AC.NZ WWW.FIRSTLIGHTHOUSE.AC.NZ

CONSULTANTS

TENNENT + BROWN ARCHITECTS
DUNNING THORNTON CONSULTANTS LTD
LEAP AUSTRALASIA LTD
SOUTHERN PERSPECTIVES / SOLAR CITY

CLIENT

U.S. DEPARTMENT OF ENERGY
SOLAR DECATHLON 2011
WWW.SOLARDECATHLON.GOV

U.S. DEPARTMENT OF ENERGY SOLAR DECATHLON

MARK	DATE	DESCRIPTION
CN	11-01-11	FOR CONSTRUCTION

LOT NUMBER:	LOT NUMBER
DRAWN BY:	Author
CHECKED BY:	Checker
COPYRIGHT:	VICTORIA UNIVERSITY

SHEET TITLE

FOUNDATION SUB FRAME

S-506

8/13/2011 8:51:35 AM

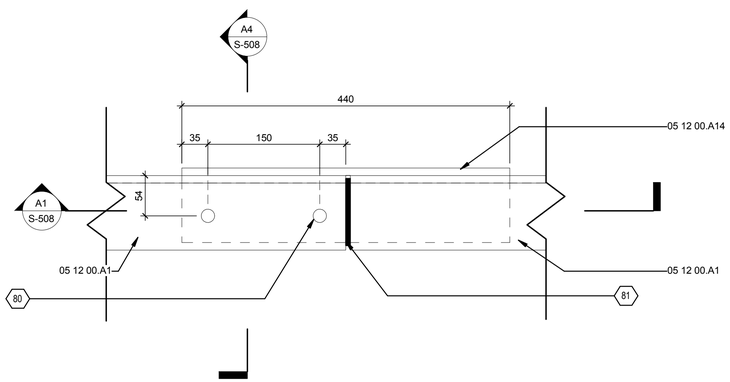

C1 BEARER CONNECTION PLAN
1 : 4

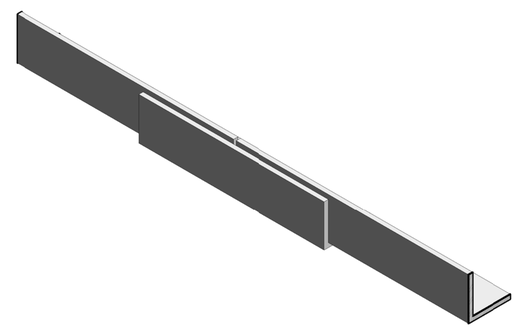

C4 BEARER & CONNECTION PLATE DETAIL

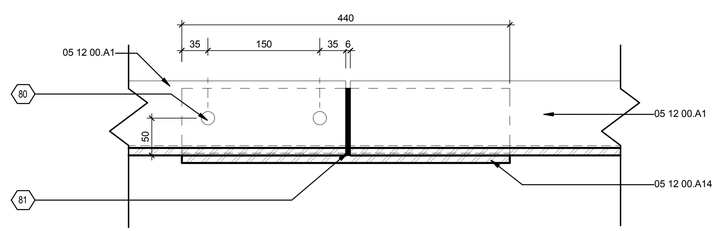

A1 BEARER LONGITUDINAL SECTION
1 : 4

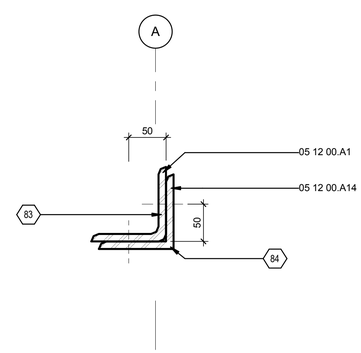

A4 BEARER TRANSVERSE SECTION
1 : 4

GENERAL SHEET NOTES

REFERENCE KEYNOTES

05 12 00.A1	100X100X10MM EA FOUNDATION BEARER
05 12 00.A14	100X100X10MM EA FOUNDATION BEARER CONNECTON ANGLE

SHEET KEYNOTES

80	4/M16 COUNTERSUNK BOLTS FITTED VERTICALLY & HORIZONTALLY THROUGH ANGLES
81	6MM FILLET WELD AROUND ALL EDGES BETWEEN CONNECTION ANGLE AND SINGLE BEARER
83	M16 COUNTERSUNK BOLTS INSIDE FACE OF BEARER MUST REMAIN FREE FROM OBSTRUCTION
84	GRIND CORNER OF BEARER LOCALLY SO BEARER CONNECTION ANGLE FITS SNUGLY

FIRST LIGHT NZ

TEAM NAME:	FIRST LIGHT
ADDRESS:	139 VIVIAN STREET TE ARO, WELLINGTON NEWZEALAND
CONTACT:	ELINUTTALL@GMAIL.COM WWW.FIRSTLIGHTHOUSE.AC.NZ

CONSULTANTS

TENNENT + BROWN ARCHITECTS
DUNNING THORNTON CONSULTANTS LTD
LEAP AUSTRALASIA LTD
SOUTHERN PERSPECTIVES / SOLAR CITY

CLIENT

U.S. DEPARTMENT OF ENERGY
SOLAR DECATHLON 2011
WWW.SOLARDECATHLON.GOV

U.S. DEPARTMENT OF ENERGY SOLAR DECATHLON

MARK	DATE	DESCRIPTION
CN	11-01-11	FOR CONSTRUCTION

LOT NUMBER:	LOT NUMBER
DRAWN BY:	Author
CHECKED BY:	Checker
COPYRIGHT:	

SHEET TITLE

BEARER CONNECTION DETAILS

S-508

8/13/2011 8:51:45 AM

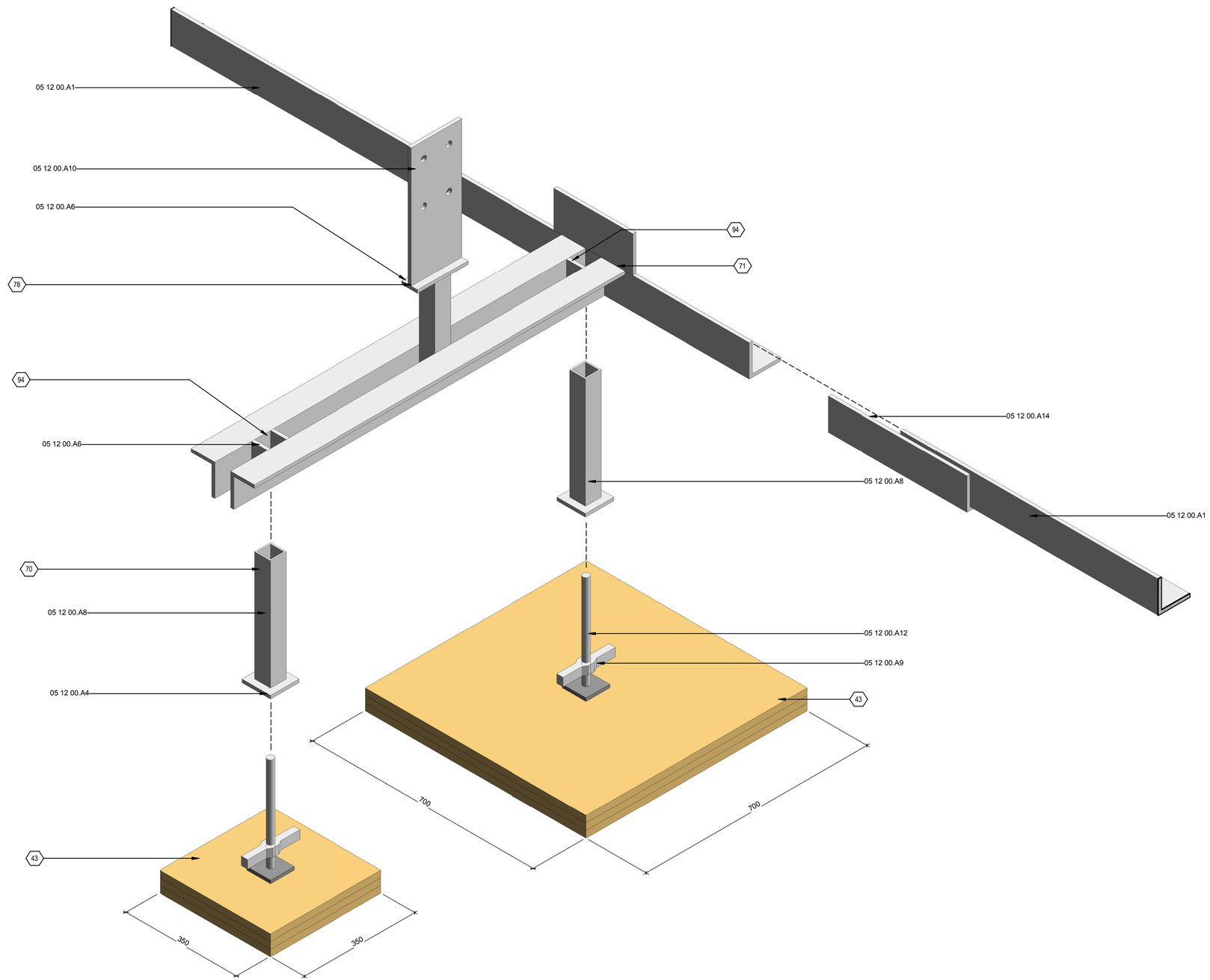

A1 TYPICAL FRAME EXPLODED

8/13/2011 8:51:56 AM

GENERAL SHEET NOTES

REFERENCE KEYNOTES

05 12 00.A1	100X100X10MM EA FOUNDATION BEARER
05 12 00.A4	10MM STEEL PLATE
05 12 00.A6	160X50X10MM STEEL SUPPORT PLATE
05 12 00.A8	50X50X4MM SHS STEEL ADJUSTABLE INSERT
05 12 00.A9	STEEL SCAFFOLD SCREW JACK NUT
05 12 00.A10	230X160X10MM STEEL POST CONNECTION PLATE
05 12 00.A12	ADJUSTABLE STEEL SCAFFOLD SCREW WITH 700X700MM PLYWOOD FOOTING. MAXIMUM VERTICAL DEVIATION 463MM
05 12 00.A14	100X100X10MM EA FOUNDATION BEARER CONNECTON ANGLE

SHEET KEYNOTES

43	FOUNDATION BASE PLATE. 3X21MM PLYWOOD SHEETS
70	ADJUSTABLE INSERT TIGHT FITTED BETWEEN ANGLES AND WELDED PLATE
71	OUTRIGGER WELDED TO CONNECTION PLATE
78	PLATE WELDED TO POST SUPPORT160X50MM
94	10MM PLATE WELDED BETWEEN ANGLES TO FORM BOX. CREATE TIGHT FIT TO SHS INSERT. INSIDE FACE MUST REMIAN CLEAR TO ENABLE INSERT TO SLIDE

FIRST LIGHT NZ

TEAM NAME:	FIRST LIGHT
ADDRESS:	139 VIVIAN STREET TE ARO, WELLINGTON NEWZEALAND
CONTACT:	ELINUTTALL@GMAIL.COM WWW.FIRSTLIGHTHOUSE.AC.NZ

CONSULTANTS

TENNENT + BROWN ARCHITECTS

DUNNING THORNTON CONSULTANTS LTD

LEAP AUSTRALASIA LTD

SOUTHERN PERSPECTIVES / SOLAR CITY

CLIENT

U.S. DEPARTMENT OF ENERGY

SOLAR DECATHLON 2011

WWW.SOLARDECATHLON.GOV

U.S. DEPARTMENT OF ENERGY SOLAR DECATHLON

MARK	DATE	DESCRIPTION
CN	11-01-11	FOR CONSTRUCTION

LOT NUMBER:	LOT NUMBER
DRAWN BY:	Author
CHECKED BY:	Checker
COPYRIGHT:	

SHEET TITLE

TYPICAL FRAME EXPLODED

S-901

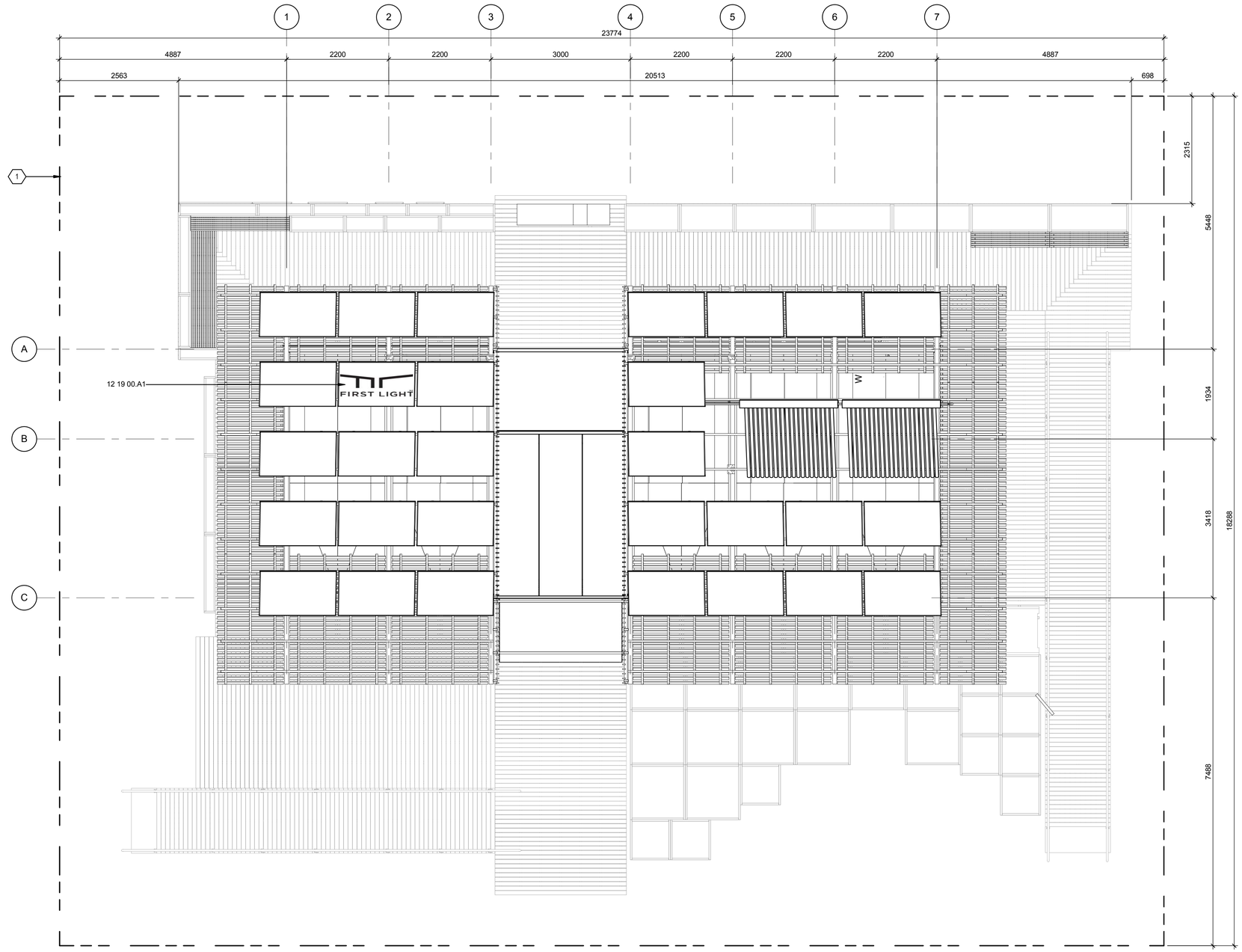

A1 SITE PLAN
1 : 48

0 2' 4' 8'

GENERAL SHEET NOTES

REFERENCE KEYNOTES

12 19 00.A1	PLYWOOD FIRST LIGHT LOGO PANEL

SHEET KEYNOTES

1	SITE BOUNDARY

FIRST LIGHT NZ

TEAM NAME:	FIRSTLIGHT NZ
ADDRESS:	139 VIVIAN STREET TE ARO, WELLINGTON NEWZEALAND
CONTACT:	INFO@FIRSTLIGHTHOUSE.AC.NZ WWW.FIRSTLIGHTHOUSE.AC.NZ

CONSULTANTS

TENNENT + BROWN ARCHITECTS
DUNNING THORNTON CONSULTANTS LTD
LEAP AUSTRALASIA LTD
SOUTHERN PERSPECTIVES / SOLAR CITY

CLIENT

U.S. DEPARTMENT OF ENERGY
SOLAR DECATHLON 2011
WWW.SOLARDECATHLON.GOV

U.S. DEPARTMENT OF ENERGY SOLAR DECATHLON

MARK	DATE	DESCRIPTION
CN	11-01-11	FOR CONSTRUCTION

LOT NUMBER:	LOT NUMBER
DRAWN BY:	AUTHOR
CHECKED BY:	GM
COPYRIGHT:	VICTORIA UNIVERSITY

SHEET TITLE

SITE PLAN

A-101

8/13/2011 8:18:28 AM

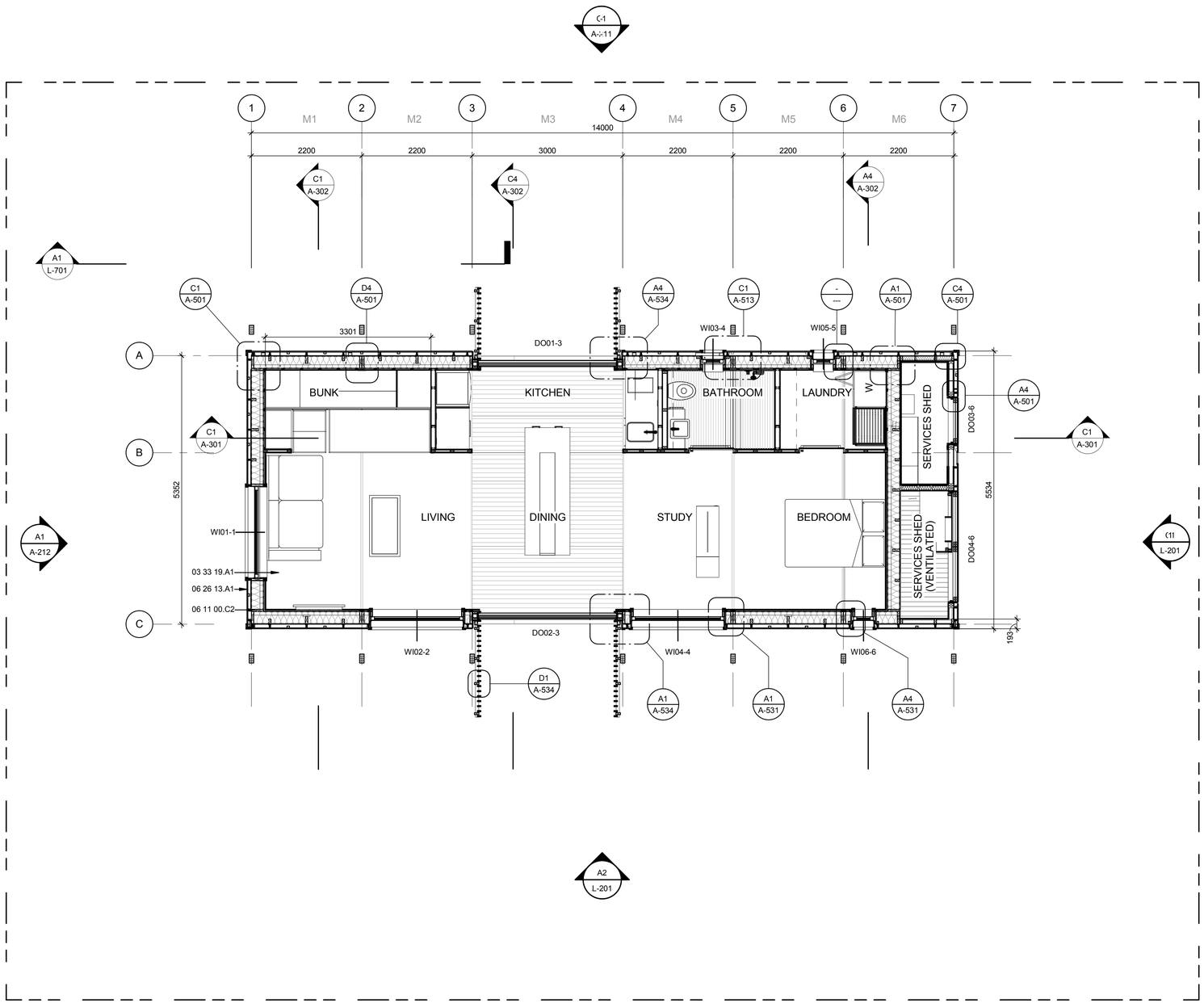

A1 FLOOR PLAN
1 : 48

0 2' 4' 8'

8/13/2011 8:18:44 AM

GENERAL SHEET NOTES

1.
REFER INTERIOR DRAWING SET FOR INTERNAL WALL SETOUT

REFERENCE KEYNOTES

03 33 19.A1	50MM FLEXUS ENGINEERED CEMENTITIOUS COMPOSITE CONCRETE FLOOR WITH 10MM ARDEX PANDOMO K1 LEVELLING COMPOUND. CONCRETE FIXED WITH COMPOSITE FLOOR SHEAR CONNECTORS TO TIMBER JOISTS (REFER ENGINEERS SKETCH DETAIL FOR FIXING)
06 11 00.C2	240X45MM LVL WALL STUD
06 26 13.A1	PANELIZED REMOVABLE HORIZONTAL SHIPLAP CEDAR WEATHERBOARDS ON 60MM CAVITY, FIXED T 735MM MAX CRS TO ALUMINIUM CAVITY BATTENS.

SHEET KEYNOTES

FIRST LIGHT NZ

TEAM NAME:	FIRSTLIGHT NZ
ADDRESS:	139 VIVIAN STREET TE ARO, WELLINGTON NEWZEALAND
CONTACT:	INFO@FIRSTLIGHTHOUSE.AC.NZ WWW.FIRSTLIGHTHOUSE.AC.NZ

CONSULTANTS

TENNENT + BROWN ARCHITECTS
DUNNING THORNTON CONSULTANTS LTD
LEAP AUSTRALASIA LTD
SOUTHERN PERSPECTIVES / SOLAR CITY

CLIENT

U.S. DEPARTMENT OF ENERGY
SOLAR DECATHLON 2011
WWW.SOLARDECATHLON.GOV

U.S. DEPARTMENT OF ENERGY SOLAR DECATHLON

MARK	DATE	DESCRIPTION
CN	11-01-11	FOR CONSTRUCTION

LOT NUMBER:	LOT NUMBER
DRAWN BY:	AUTHOR
CHECKED BY:	CHECKER
COPYRIGHT:	VICTORIA UNIVERSITY

SHEET TITLE

FLOOR PLAN

A-111

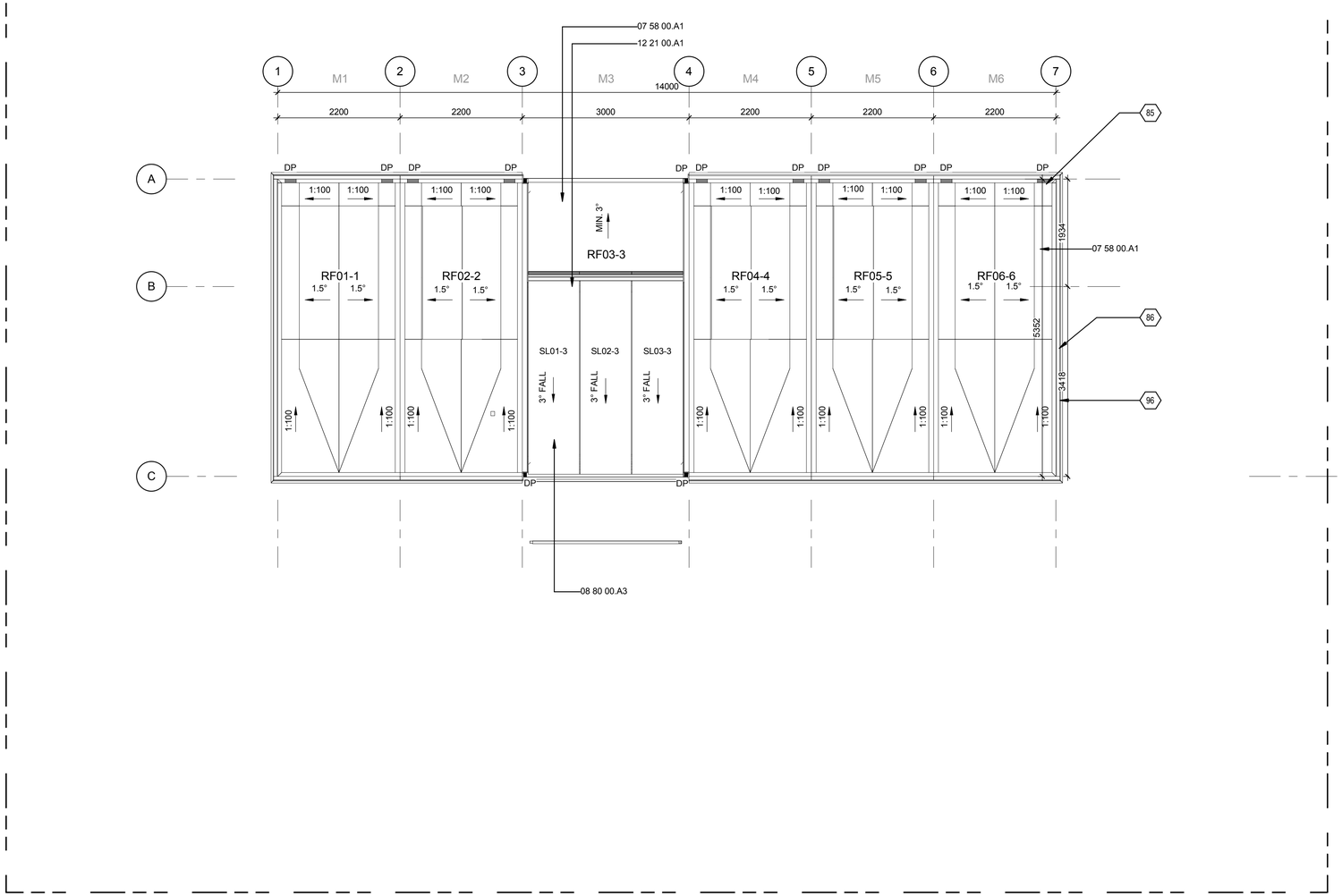

A1 ROOF PLAN
1 : 48

0 2' 4' 8'

8/13/2011 8:18:53 AM

GENERAL SHEET NOTES

REFERENCE KEYNOTES

07 58 00.A1	BUTYNOL ROOFING MEMBRANE ON PLYWOOD SUBSTRATE. 1.5° FALL TO ROOF.
08 80 00.A3	TRIPPLE GLAZED THREE PART CUSTOM SKYLIGHT STRUCTUALLY SEALED TO MS ANGLE FRAMES. 42MM, 3° FALL
12 21 00.A1	MOTORISED ROLLOUT THERMAL SKYLIGHT INSULATION UNDER SKYLIGHT.

SHEET KEYNOTES

85	ROOF PANELS SCUPPERED ON NORTH EDGE. DOWNPIPES RUN IN CAVITY BETWEEN WALL AND REMOVABLE CLADDING PANELS.
86	PARAPET FLASHING OVER EXTERIOR CLADDING PANELS INSTALLED AFTER MODULE ASSEMBLY
96	INDIVIDUAL ROOFING MODULES PREFABRICATED OFF SITE

FIRST LIGHT NZ

TEAM NAME:	FIRST LIGHT
ADDRESS:	139 VIVIAN STREET TE ARO, WELLINGTON NEWZEALAND
CONTACT:	ELINUTTALL@GMAIL.COM WWW.FIRSTLIGHTHOUSE.AC.NZ

CONSULTANTS

TENNENT + BROWN ARCHITECTS
DUNNING THORNTON CONSULTANTS LTD
LEAP AUSTRALASIA LTD
SOUTHERN PERSPECTIVES / SOLAR CITY

CLIENT

U.S. DEPARTMENT OF ENERGY
SOLAR DECATHLON 2011
WWW.SOLARDECATHLON.GOV

U.S. DEPARTMENT OF ENERGY SOLAR DECATHLON

MARK	DATE	DESCRIPTION
CN	11-01-11	FOR CONSTRUCTION

LOT NUMBER:	LOT NUMBER
DRAWN BY:	AUTHOR
CHECKED BY:	CHECKER
COPYRIGHT:	

SHEET TITLE

ROOF PLAN

A-112

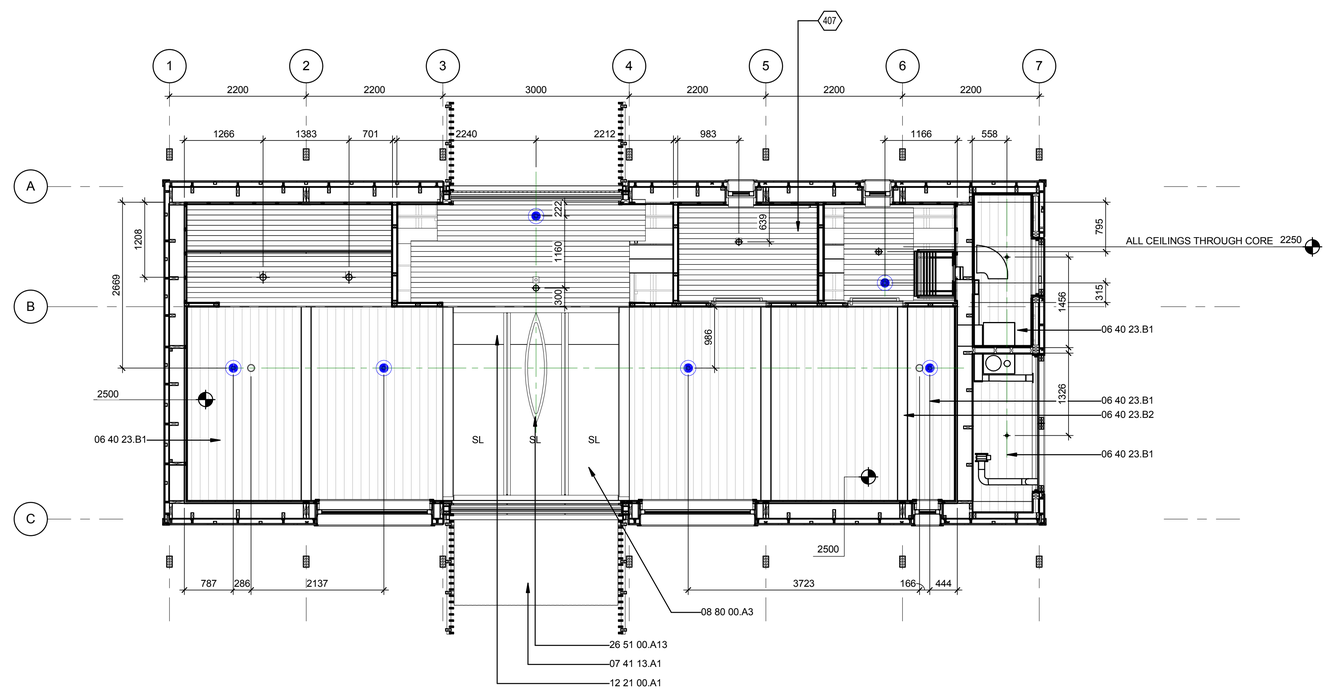

A2 REFLECTED CEILING PLAN
1 : 48

0 2' 4' 8'

GENERAL SHEET NOTES

1.
MEASUREMENTS FOR CEILING FITTINGS TAKEN FROM WALL STRUCTURE

6W RECESSED DOWNLIGHT

12W RECESSED DOWNLIGHT

SMOKE DETECTOR / ALARM

SPRINKLER HEAD

REFERENCE KEYNOTES

06 40 23.B1	135X19MM WHITEWASHED TONGUE & GROOVE PROFILE PINE TIMBER BOARD TO CEILING ALIGNED TO DIRECTION INDICATED
06 40 23.B2	150 X 19MM REMOVABLE WHITEWASHED TIMBER BOARD TO MODULE JOINS
07 41 13.A1	METALCRAFT PROFILED CORRUGATE ROOFING AT 3°. BOLT FIXED TO STEEL ANGLE
08 80 00.A3	TRIPPLE GLAZED THREE PART CUSTOM SKYLIGHT STRUCTUALLY SEALED TO MS ANGLE FRAMES. 42MM, 3° FALL
12 21 00.A1	MOTORISED ROLLOUT THERMAL SKYLIGHT INSULATION UNDER SKYLIGHT.
26 51 00.A13	FEATURE PENDANT LIGHTING FIXTURE OVER DINING ROOM TABLE

SHEET KEYNOTES

407	REMOVEABLE RIMU T&G CEILING PANELS TO ALL CEILINGS THROUGH BUILDING CORE - REFER INTERIOR DRAWING SET FOR DETAILS AND SETOUT

FIRST LIGHT NZ

TEAM NAME:	FIRSTLIGHT NZ
ADDRESS:	139 VIVIAN STREET TE ARO, WELLINGTON NEWZEALAND
CONTACT:	INFO@FIRSTLIGHTHOUSE.AC.NZ WWW.FIRSTLIGHTHOUSE.AC.NZ

CONSULTANTS

TENNENT + BROWN ARCHITECTS

DUNNING THORNTON CONSULTANTS LTD

LEAP AUSTRALASIA LTD

SOUTHERN PERSPECTIVES / SOLAR CITY

CLIENT

U.S. DEPARTMENT OF ENERGY

SOLAR DECATHLON 2011

WWW.SOLARDECATHLON.GOV

U.S. DEPARTMENT OF ENERGY SOLAR DECATHLON

MARK	DATE	DESCRIPTION
CN	11-01-11	FOR CONSTRUCTION

LOT NUMBER:	LOT NUMBER
DRAWN BY:	AUTHOR
CHECKED BY:	CHECKER
COPYRIGHT:	VICTORIA UNIVERSITY

SHEET TITLE

REFLECTED CEILING PLAN

A-121

8/13/2011 8:19:00 AM

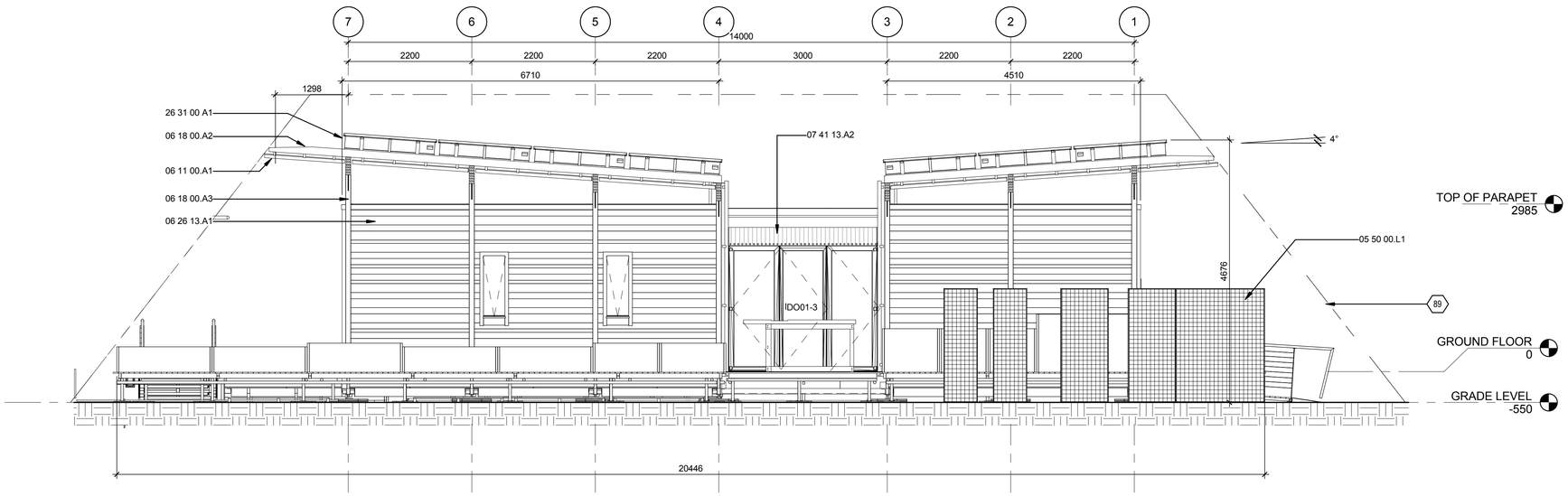

C1 NORTH ELEVATION
1 : 48

0 2' 4' 8'

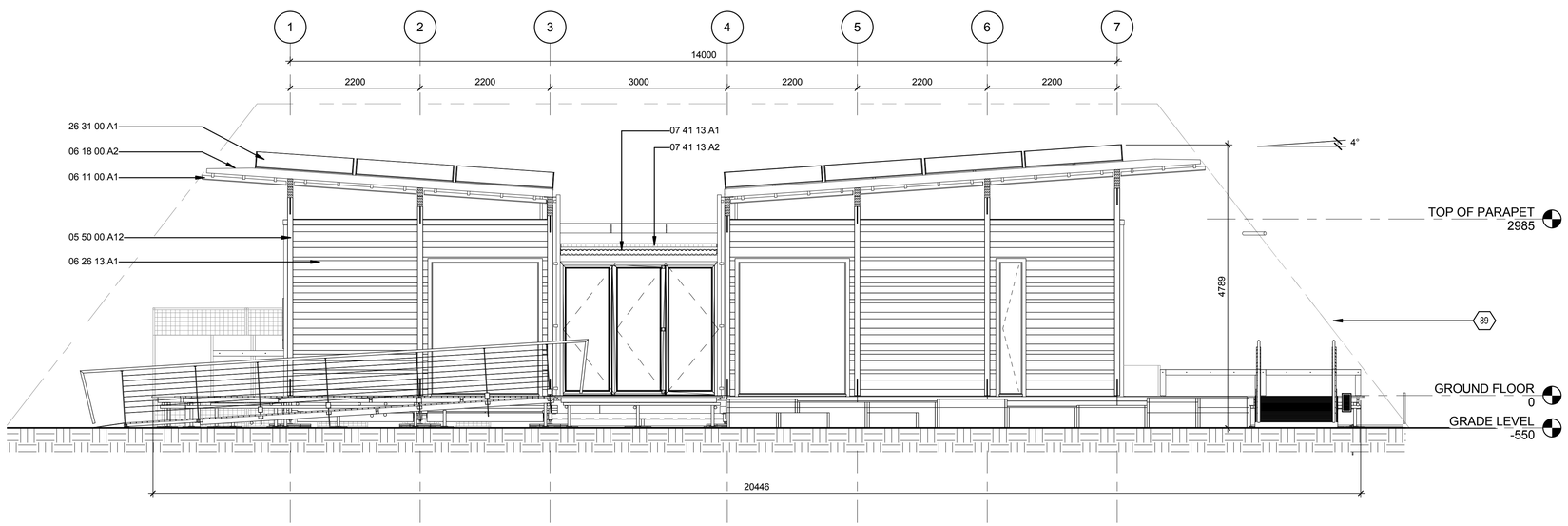

A1 SOUTH ELEVATION
1 : 48

0 2' 4' 8'

GENERAL SHEET NOTES

REFERENCE KEYNOTES

05 50 00.A12	CLADDING WALL CHANNEL TYPE C06
05 50 00.L1	LANDSCAPE SCREEN TYPE 1 - NUMBER NEEDED 2
06 11 00.A1	75X19MM CEDAR SLATS AT 100MM CENTRES FIXED TO 65X35MM BATTENS. CONSTRUCTED IN PANELISED SYSTEM FOR ONSITE ASSEMBLY.
06 18 00.A2	135X42MM GLULAM GL8 RAFTERS AT 750MM NOM. CENTRES SPANNIG FULL LENGTH OF CANOPY, TAPERING TO 70X42MM @ CANTILEVERED END. REFER FABRICATION DRAWINGS.
06 18 00.A3	90X180MM GLULAM GL10 COLUMN. REFER FABRICATION DRAWINGS.
06 26 13.A1	PANELIZED REMOVABLE HORIZONTAL SHIPLAP CEDAR WEATHERBOARDS ON 60MM CAVITY, FIXED T 735MM MAX CRS TO ALUMINIUM CAVITY BATTENS.
07 41 13.A1	METALCRAFT PROFILED CORRUGATE ROOFING AT 3°. BOLT FIXED TO STEEL ANGLE
07 41 13.A2	CORRUGATED ALUMINIUM CLADDING
26 31 00 A1	225W MITSUBISHI PHOTOVOLTAIC COLLECTORS

SHEET KEYNOTES

89	SOLAR ENVELOPE FOR WASHINGTON SITE SHOWN DASHED

FIRST LIGHT NZ

TEAM NAME: FIRSTLIGHT NZ
ADDRESS: 139 VIVIAN STREET TE ARO, WELLINGTON NEWZEALAND
CONTACT: INFO@FIRSTLIGHTHOUSE.AC.NZ WWW.FIRSTLIGHTHOUSE.AC.NZ

CONSULTANTS

TENNENT + BROWN ARCHITECTS
DUNNING THORNTON CONSULTANTS LTD
LEAP AUSTRALASIA LTD
SOUTHERN PERSPECTIVES / SOLAR CITY

CLIENT
U.S. DEPARTMENT OF ENERGY
SOLAR DECATHLON 2011
WWW.SOLARDECATHLON.GOV

U.S. DEPARTMENT OF ENERGY SOLAR DECATHLON

MARK	DATE	DESCRIPTION
CN	11-01-11	FOR CONSTRUCTION

LOT NUMBER:	LOT NUMBER
DRAWN BY:	AUTHOR
CHECKED BY:	CHECKER
COPYRIGHT:	VICTORIA UNIVERSITY

SHEET TITLE
ELEVATIONS

A-211

8/13/2011 8:19:14 AM

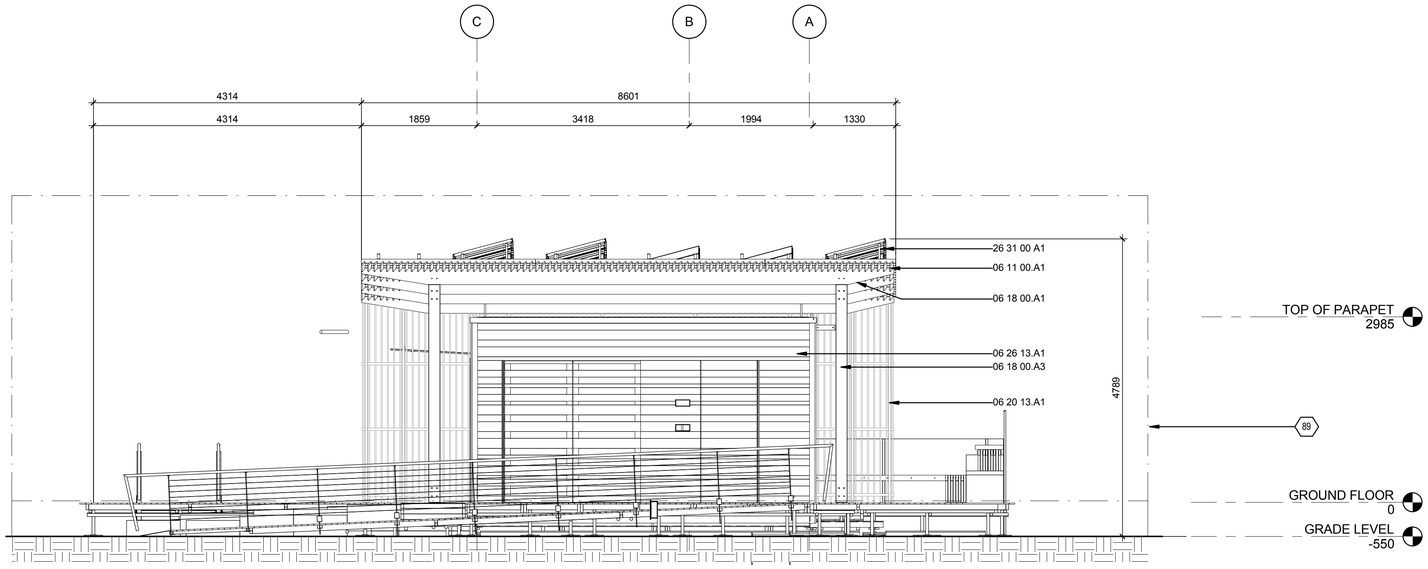

C1 EAST ELEVATION

1 : 48

0 2' 4' 8'

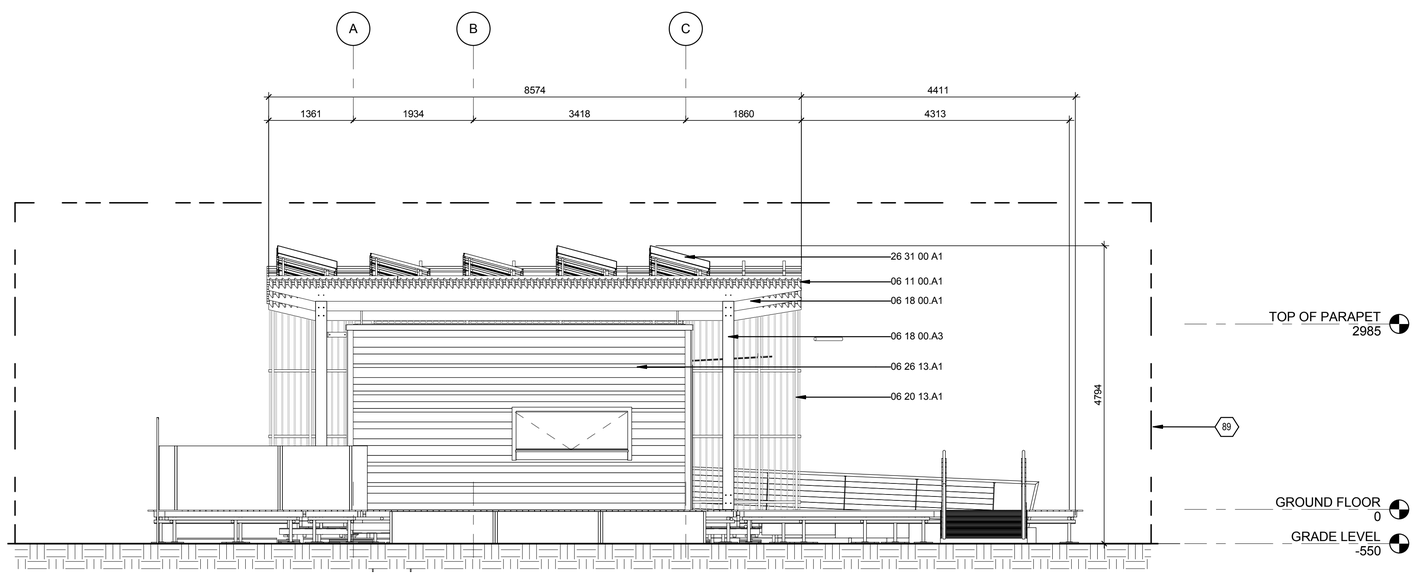

A1 WEST ELEVATION

1 : 48

0 2' 4' 8'

8/13/2011 8:19:35 AM

GENERAL SHEET NOTES

REFERENCE KEYNOTES

06 11 00.A1	75X19MM CEDAR SLATS AT 100MM CENTRES FIXED TO 65X35MM BATTENS. CONSTRUCTED IN PANELISED SYSTEM FOR ONSITE ASSEMBLY.
06 18 00.A1	318X90MM GLUE-LAMINATED TIMBER BEAM SPANNING BETWEEN COLUMNS, TAPERING TO 135X90 @ CANTILEVERED ENDS. REFER FABRICATION DRAWINGS.
06 18 00.A3	90X180MM GLULAM GL10 COLUMN. REFER FABRICATION DRAWINGS.
06 20 13.A1	65X19MM CEDAR SLATS @100MM CENTRES.
06 26 13.A1	PANELIZED REMOVABLE HORIZONTAL SHIPLAP CEDAR WEATHERBOARDS ON 60MM CAVITY, FIXED T 735MM MAX CRS TO ALUMINIUM CAVITY BATTENS.
26 31 00 A1	225W MITSUBISHI PHOTOVOLTAIC COLLECTORS

SHEET KEYNOTES

89	SOLAR ENVELOPE FOR WASHINGTON SITE SHOWN DASHED

FIRST LIGHT NZ

TEAM NAME:	FIRSTLIGHT NZ
ADDRESS:	139 VIVIAN STREET TE ARO, WELLINGTON NEWZEALAND
CONTACT:	INFO@FIRSTLIGHTHOUSE.AC.NZ WWW.FIRSTLIGHTHOUSE.AC.NZ

CONSULTANTS

TENNENT + BROWN ARCHITECTS

DUNNING THORNTON CONSULTANTS LTD

LEAP AUSTRALASIA LTD

SOUTHERN PERSPECTIVES / SOLAR CITY

CLIENT

U.S. DEPARTMENT OF ENERGY

SOLAR DECATHLON 2011

WWW.SOLARDECATHLON.GOV

U.S. DEPARTMENT OF ENERGY SOLAR DECATHLON

MARK	DATE	DESCRIPTION
CN	11-01-11	FOR CONSTRUCTION

LOT NUMBER:	LOT NUMBER
DRAWN BY:	AUTHOR
CHECKED BY:	CHECKER
COPYRIGHT:	VICTORIA UNIVERSITY

SHEET TITLE

ELEVATIONS

A-212

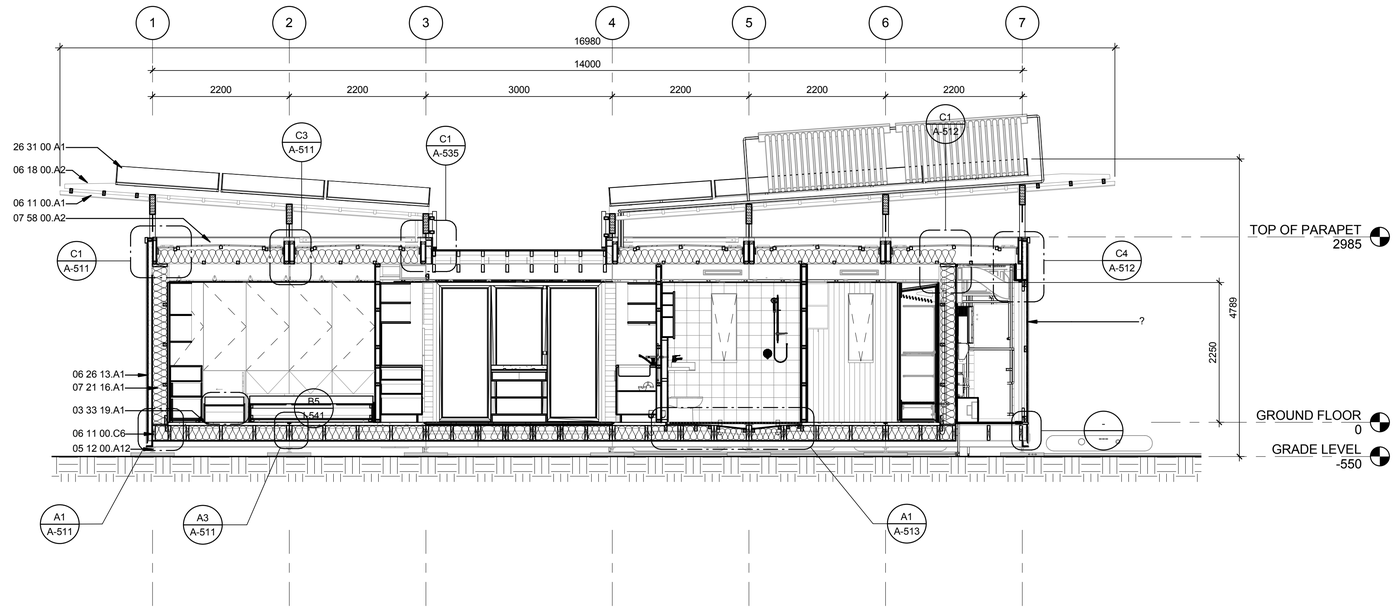

C1 LONGITUDINAL BUILDING SECTION CORE

1 : 48

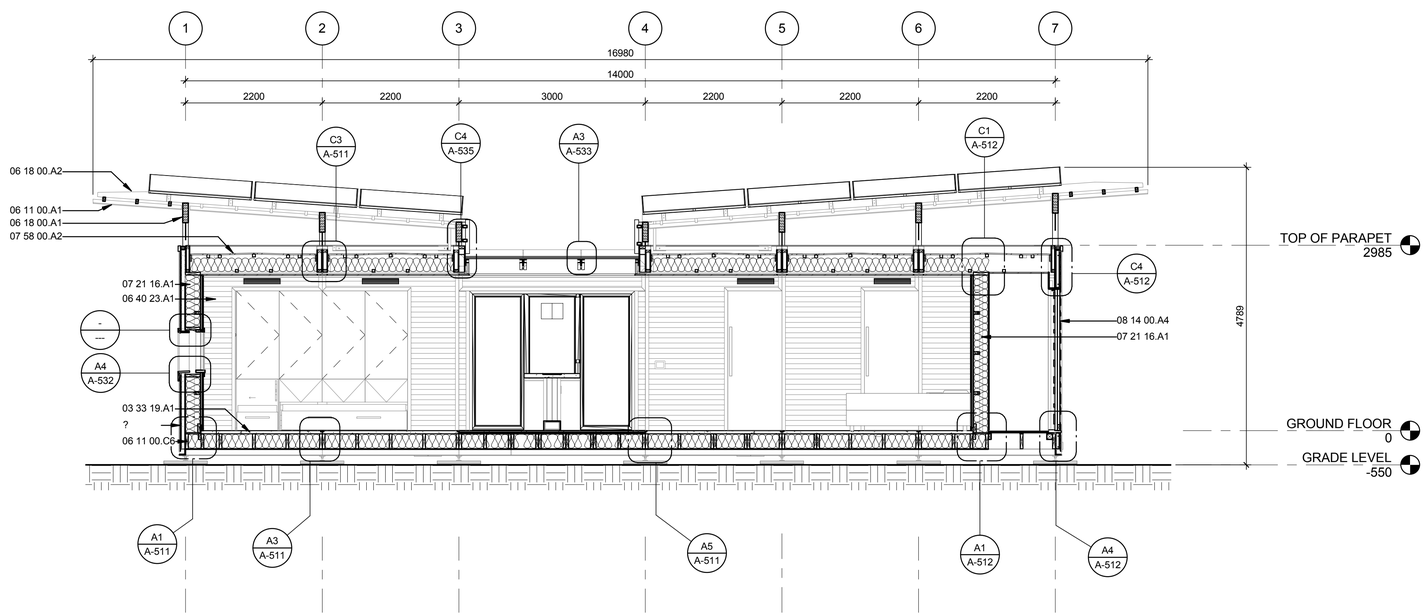

A1 LONGITUDINAL BUILDING SECTION

1 : 48

GENERAL SHEET NOTES

REFERENCE KEYNOTES

03 33 19.A1	50MM FLEXUS ENGINEERED CEMENTITIOUS COMPOSITE CONCRETE FLOOR WITH 10MM ARDEX PANDOMO K1 LEVELLING COMPOUND. CONCRETE FIXED WITH COMPOSITE FLOOR SHEAR CONNECTORS TO TIMBER JOISTS (REFER ENGINEERS SKETCH DETAIL FOR FIXING)
05 12 00.A12	ADJUSTABLE STEEL SCAFFOLD SCREW WITH 700X700MM PLYWOOD FOOTING. MAXIMUM VERTICAL DEVIATION 463MM
06 11 00.A1	75X19MM CEDAR SLATS AT 100MM CENTRES FIXED TO 65X35MM BATTENS. CONSTRUCTED IN PANELISED SYSTEM FOR ONSITE ASSEMBLY.
06 11 00.C6	240X45MM LVL FLOOR JOIST
06 18 00.A1	318X90MM GLUE-LAMINATED TIMBER BEAM SPANNING BETWEEN COLUMNS, TAPERING TO 135X90 @ CANTILEVERED ENDS. REFER FABRICATION DRAWINGS.
06 18 00.A2	135X42MM GLULAM GL8 RAFTERS AT 750MM NOM. CENTRES SPANNIG FULL LENGTH OF CANOPY, TAPERING TO 70X42MM @ CANTILEVERED END. REFER FABRICATION DRAWINGS.
06 26 13.A1	PANELIZED REMOVABLE HORIZONTAL SHIPLAP CEDAR WEATHERBOARDS ON 60MM CAVITY, FIXED T 735MM MAX CRS TO ALUMINIUM CAVITY BATTENS.
06 40 23.A1	83X12MM HORIZONTAL TONGUE & GROOVE RIMU TIMBER BOARD INTERIOR LINNING.
07 21 16.A1	WOOL INSULATION BATTS
07 58 00.A2	ROOF MODULES GENERALLY SELECTED ROOFING MEMBRANE ON PLYWOOD SUBSTRATE AND CNC ROUTED JOISTS TO FALLS. SEE RELEVANT DETAIL
08 14 00.A4	VENTILATED TIMBER DOOR TO SERVICES SHED
26 31 00 A1	225W MITSUBISHI PHOTOVOLTAIC COLLECTORS

SHEET KEYNOTES

FIRST LIGHT NZ

TEAM NAME:	FIRSTLIGHT NZ
ADDRESS:	139 VIVIAN STREET TE ARO, WELLINGTON NEWZEALAND
CONTACT:	INFO@FIRSTLIGHTHOUSE.AC.NZ WWW.FIRSTLIGHTHOUSE.AC.NZ

CONSULTANTS

TENNENT + BROWN ARCHITECTS

DUNNING THORNTON CONSULTANTS LTD

LEAP AUSTRALASIA LTD

SOUTHERN PERSPECTIVES / SOLAR CITY

CLIENT

U.S. DEPARTMENT OF ENERGY

SOLAR DECATHLON 2011

WWW.SOLARDECATHLON.GOV

U.S. DEPARTMENT OF ENERGY SOLAR DECATHLON

MARK	DATE	DESCRIPTION
CN	11-01-11	FOR CONSTRUCTION

LOT NUMBER:	LOT NUMBER
DRAWN BY:	AUTHOR
CHECKED BY:	CHECKER
COPYRIGHT:	VICTORIA UNIVERSITY

SHEET TITLE

BUILDING SECTIONS

A-301

8/13/2011 8:20:01 AM

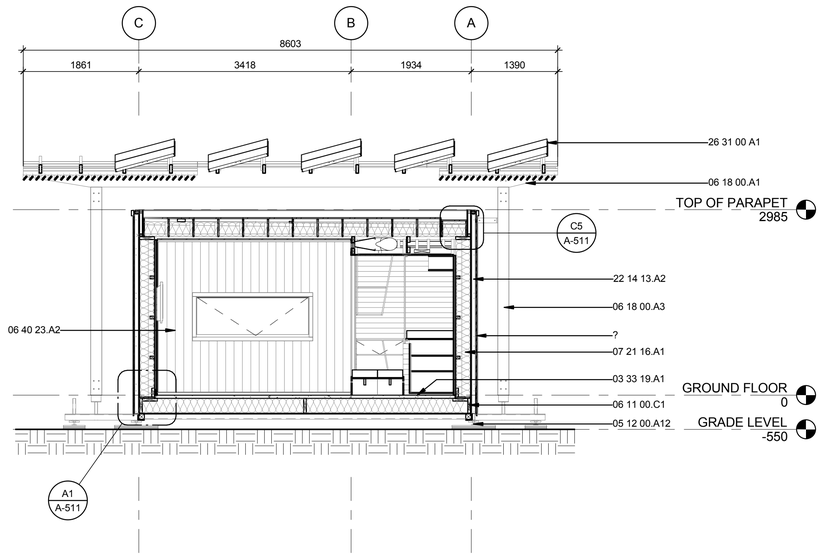

C1 TRANSVERSE BUILDING SECTION LIVING

1 : 48

0 2' 4' 8'

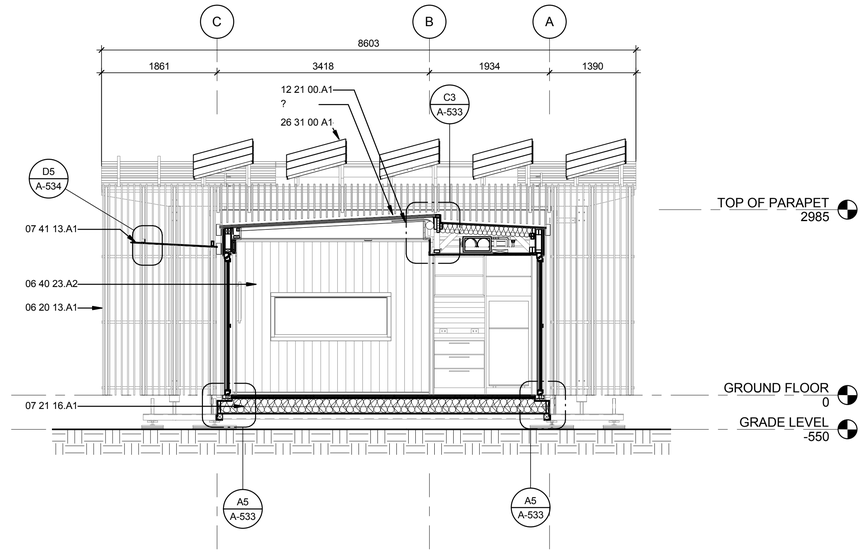

C4 TRANSVERSE BUILDING SECTION SKYLIGHT

1 : 48

0 2' 4' 8'

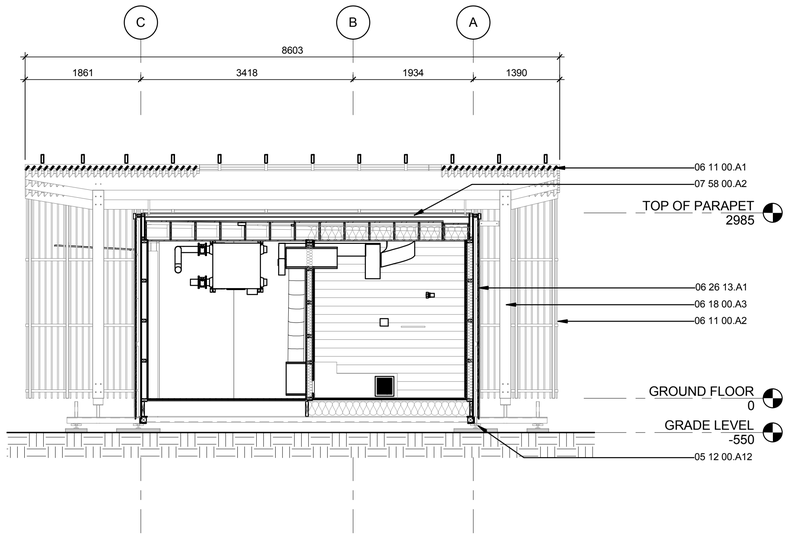

A1 TRANSVERSE BUILDING SECTION SHED

1 : 48

0 2' 4' 8'

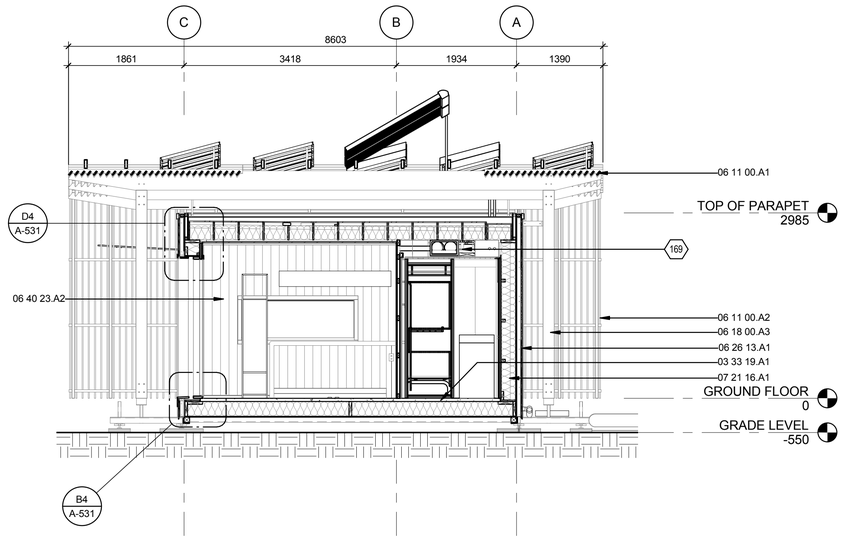

A4 TRANSVERSE BUILDING SECTION BEDROOM

1 : 48

0 2' 4' 8'

GENERAL SHEET NOTES

1. LANDSCAPE NOT SHOWN FOR CLARITY

REFERENCE KEYNOTES

03 33 19.A1	50MM FLEXUS ENGINEERED CEMENTITIOUS COMPOSITE CONCRETE FLOOR WITH 10MM ARDEX PANDOMO K1 LEVELLING COMPOUND. CONCRETE FIXED WITH COMPOSITE FLOOR SHEAR CONNECTORS TO TIMBER JOISTS (REFER ENGINEERS SKETCH DETAIL FOR FIXING)
05 12 00.A12	ADJUSTABLE STEEL SCAFFOLD SCREW WITH 700X700MM PLYWOOD FOOTING. MAXIMUM VERTICAL DEVIATION 463MM
06 11 00.A1	75X19MM CEDAR SLATS AT 100MM CENTRES FIXED TO 65X35MM BATTENS. CONSTRUCTED IN PANELISED SYSTEM FOR ONSITE ASSEMBLY.
06 11 00.A2	90 X 45MM TIMBER SUPPORT STUD
06 11 00.C1	240X45MM LVL TRIMMING JOIST
06 18 00.A1	318X90MM GLUE-LAMINATED TIMBER BEAM SPANNING BETWEEN COLUMNS, TAPERING TO 135X90 @ CANTILEVERED ENDS. REFER FABRICATION DRAWINGS.
06 18 00.A3	90X180MM GLULAM GL10 COLUMN. REFER FABRICATION DRAWINGS.
06 20 13.A1	65X19MM CEDAR SLATS @100MM CENTRES.
06 26 13.A1	PANELIZED REMOVABLE HORIZONTAL SHIPLAP CEDAR WEATHERBOARDS ON 60MM CAVITY, FIXED T 735MM MAX CRS TO ALUMINIUM CAVITY BATTENS.
06 40 23.A2	135X19MM WHITEWASHED TONGUE & GROOVE PROFILE VERTICAL TIMBER BOARD ON 45X25 TIMBER BATTENS
07 21 16.A1	WOOL INSULATION BATTS
07 41 13.A1	METALCRAFT PROFILED CORRUGATE ROOFING AT 3°. BOLT FIXED TO STEEL ANGLE
07 58 00.A2	ROOF MODULES GENERALLY SELECTED ROOFING MEMBRANE ON PLYWOOD SUBSTRATE AND CNC ROUTED JOISTS TO FALLS. SEE RELEVANT DETAIL
08 80 00.A3	TRIPPLE GLAZED THREE PART CUSTOM SKYLIGHT STRUCTUALLY SEALED TO MS ANGLE FRAMES. 42MM, 3° FALL
12 21 00.A1	MOTORISED ROLLOUT THERMAL SKYLIGHT INSULATION UNDER SKYLIGHT.
22 14 13.A2	55X75MM RECTANGULAR FACTORY PAINTED STEEL DOWNPIPE CONCEALED IN WALL CAVITY
26 31 00 A1	225W MITSUBISHI PHOTOVOLTAIC COLLECTORS

SHEET KEYNOTES

169	600X280MM OPENING IN TRANSVERSE SHEAR WALLS FOR DUCTING

FIRST LIGHT NZ

TEAM NAME: FIRSTLIGHT NZ

ADDRESS: 139 VIVIAN STREET
TE ARO, WELLINGTON
NEWZEALAND

CONTACT: INFO@FIRSTLIGHTHOUSE.AC.NZ
WWW.FIRSTLIGHTHOUSE.AC.NZ

CONSULTANTS

TENNENT + BROWN ARCHITECTS

DUNNING THORNTON CONSULTANTS LTD

LEAP AUSTRALASIA LTD

SOUTHERN PERSPECTIVES / SOLAR CITY

CLIENT

U.S. DEPARTMENT OF ENERGY

SOLAR DECATHLON 2011

WWW.SOLARDECATHLON.GOV

U.S. DEPARTMENT OF ENERGY SOLAR DECATHLON

MARK	DATE	DESCRIPTION
CN	11-01-11	FOR CONSTRUCTION

LOT NUMBER:	LOT NUMBER
DRAWN BY:	AUTHOR
CHECKED BY:	CHECKER
COPYRIGHT:	VICTORIA UNIVERSITY

SHEET TITLE

BUILDING SECTIONS

A-302

8/13/2011 8:20:23 AM

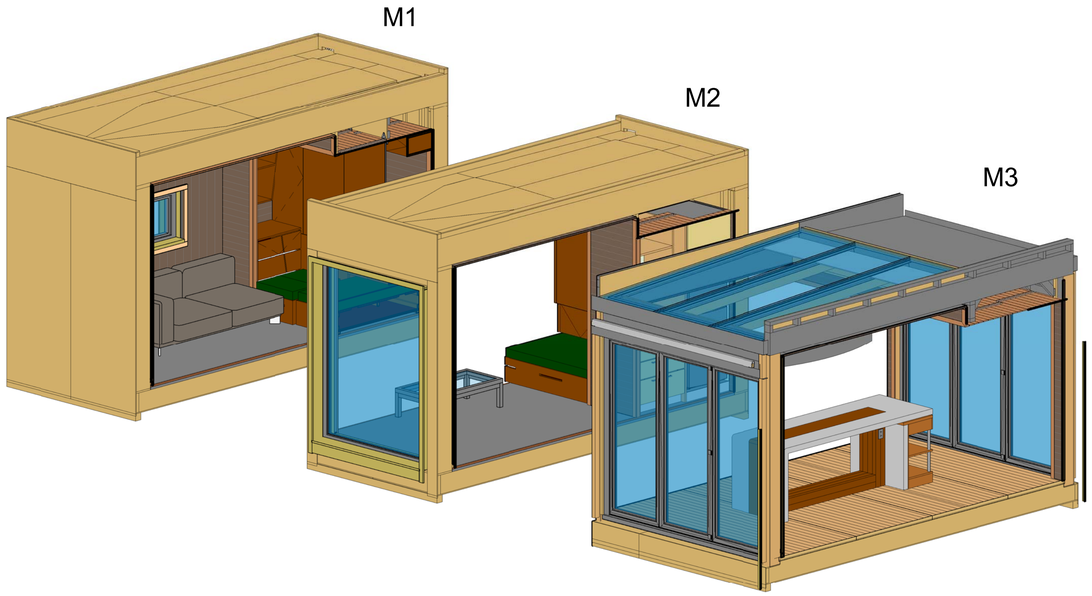

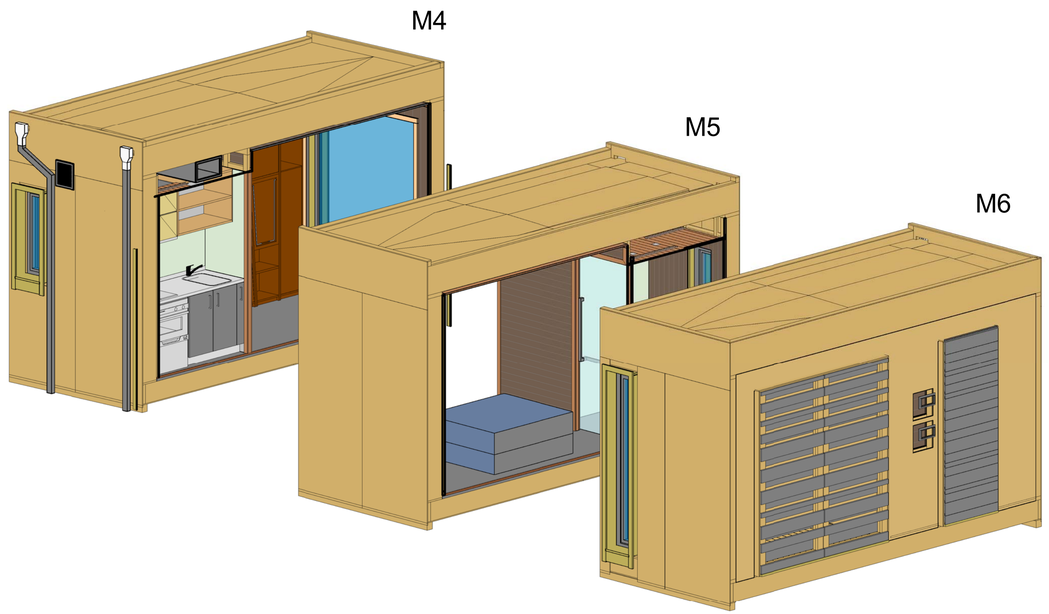

A1 EXPLODED MODULES

GENERAL SHEET NOTES

1.
MODULE 3 WILL BE DISASSEMBLED AND PACKED INTO THE 40 FOOT SHIPPING CONTAINERS

REFERENCE KEYNOTES

SHEET KEYNOTES

FIRST LIGHT NZ

TEAM NAME:	FIRSTLIGHT NZ
ADDRESS:	139 VIVIAN STREET TE ARO, WELLINGTON NEWZEALAND
CONTACT:	INFO@FIRSTLIGHTHOUSE.AC.NZ WWW.FIRSTLIGHTHOUSE.AC.NZ

CONSULTANTS

TENNENT + BROWN ARCHITECTS
DUNNING THORNTON CONSULTANTS LTD
LEAP AUSTRALASIA LTD
SOUTHERN PERSPECTIVES / SOLAR CITY

CLIENT

U.S. DEPARTMENT OF ENERGY
SOLAR DECATHLON 2011
WWW.SOLARDECATHLON.GOV

U.S. DEPARTMENT OF ENERGY SOLAR DECATHLON

MARK	DATE	DESCRIPTION
CN	11-01-11	FOR CONSTRUCTION

LOT NUMBER:	LOT NUMBER
DRAWN BY:	AUTHOR
CHECKED BY:	CHECKER
COPYRIGHT:	VICTORIA UNIVERSITY

SHEET TITLE

EXPLODED MODULES SCHEMATIC

A-401

8/13/2011 8:20:38 AM

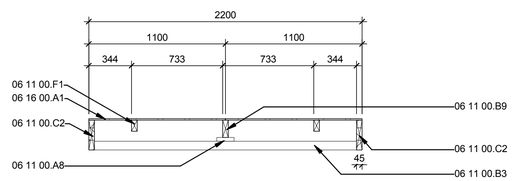

D2 WALL TYPE 1
1 : 24

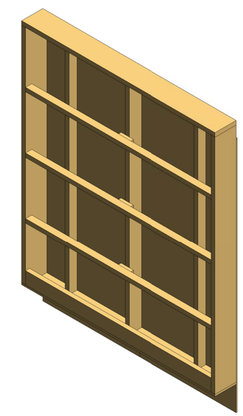

D5 WALL TYPE 1

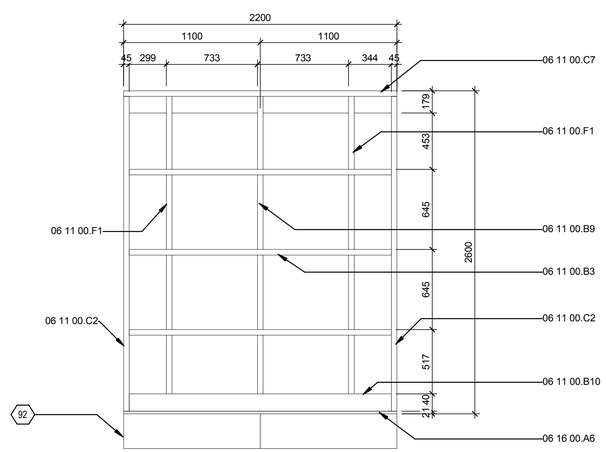

A2 WALL TYPE 1 FRAMING ELEVATION
1 : 24

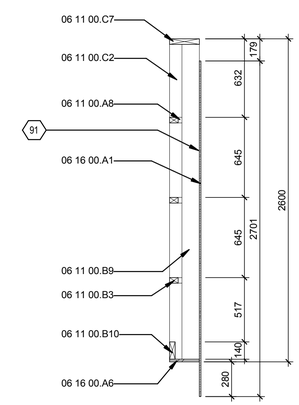

A5 WALL TYPE 1 SECTION
1 : 24

GENERAL SHEET NOTES

REFERENCE KEYNOTES

06 11 00.A8	30X45MM TIMBER BLOCKING
06 11 00.B3	70X45MM HORIZONTAL TIMBER
06 11 00.B9	140X45MM TIMBER STUD
06 11 00.B10	140X45MM HORIZONTAL TIMBER
06 11 00.C2	240X45MM LVL WALL STUD
06 11 00.C7	240X45MM TIMBER TOP PLATE
06 11 00.F1	90X45MM TIMBER WALL STUD
06 16 00.A1	12MM PLYWOOD BRACING SHEETS LAID VERTICALLY
06 16 00.A6	21MM PLYWOOD BOTTOM PLATE

SHEET KEYNOTES

91	FIX WITH 2.8MMØ X50 FLAT HEAD NAILS @150MM CTRS TO SHEET EDGES, 300MMCRS INTERNALLY
92	PLYWOOD SHEETS SHOWN BEYOND. FIX WITH 2.8Ø X50 FLAT HEAD NAILS @150CRS TO SHEET EDGES, 300CRS INTERNALLY

FIRST LIGHT NZ

TEAM NAME:	FIRSTLIGHT NZ
ADDRESS:	139 VIVIAN STREET TE ARO, WELLINGTON NEWZEALAND
CONTACT:	INFO@FIRSTLIGHTHOUSE.AC.NZ WWW.FIRSTLIGHTHOUSE.AC.NZ

CONSULTANTS

TENNENT + BROWN ARCHITECTS
DUNNING THORNTON CONSULTANTS LTD
LEAP AUSTRALASIA LTD
SOUTHERN PERSPECTIVES / SOLAR CITY

CLIENT

U.S. DEPARTMENT OF ENERGY
SOLAR DECATHLON 2011
WWW.SOLARDECATHLON.GOV

U.S. DEPARTMENT OF ENERGY SOLAR DECATHLON

MARK	DATE	DESCRIPTION
CN	11-01-11	FOR CONSTRUCTION

LOT NUMBER:	LOT NUMBER
DRAWN BY:	Author
CHECKED BY:	Checker
COPYRIGHT:	VICTORIA UNIVERSITY

SHEET TITLE

WALL TYPE 1

A-411

8/13/2011 8:20:49 AM

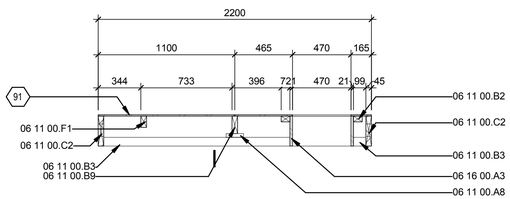

C1 WALL TYPE 2
1 : 24

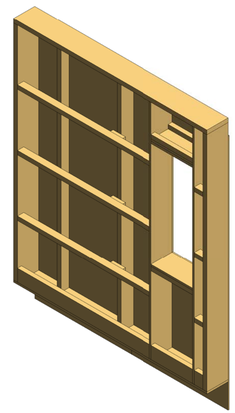

C5 WALL TYPE 2

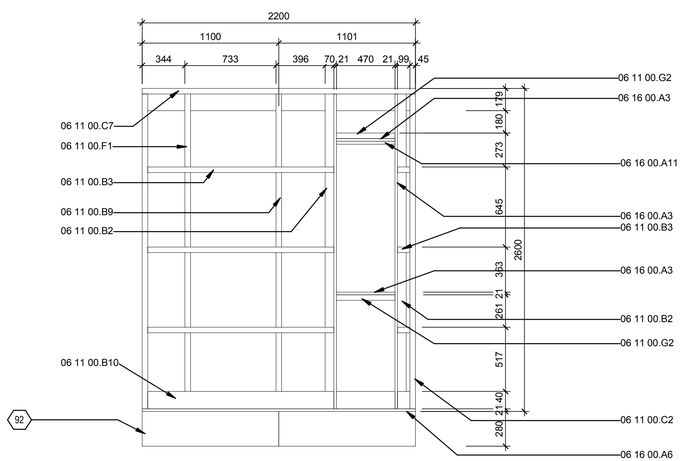

A1 WALL TYPE 2 FRAMING ELEVATION
1 : 24

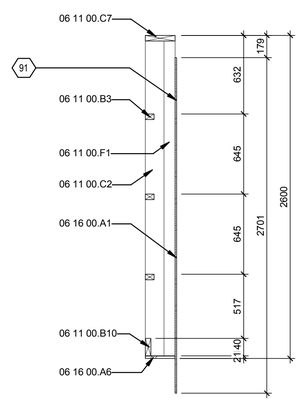

A3 WALL TYPE 2 SECTION
1 : 24

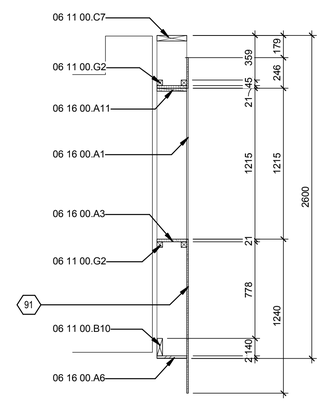

A5 WALL TYPE 2 OPENING SECTION
1 : 24

GENERAL SHEET NOTES

REFERENCE KEYNOTES

06 11 00.A8	30X45MM TIMBER BLOCKING
06 11 00.B2	70X45MM TIMBER STUD
06 11 00.B3	70X45MM HORIZONTAL TIMBER
06 11 00.B9	140X45MM TIMBER STUD
06 11 00.B10	140X45MM HORIZONTAL TIMBER
06 11 00.C2	240X45MM LVL WALL STUD
06 11 00.C7	240X45MM TIMBER TOP PLATE
06 11 00.F1	90X45MM TIMBER WALL STUD
06 11 00.G2	45X45MM BLOCKING TIMBER
06 16 00.A1	12MM PLYWOOD BRACING SHEETS LAID VERTICALLY
06 16 00.A3	21MM PLYWOOD
06 16 00.A6	21MM PLYWOOD BOTTOM PLATE
06 16 00.A11	12MM PLYWOOD LINING, TREATED AND PAINTED

SHEET KEYNOTES

91	FIX WITH 2.8MMØ X50 FLAT HEAD NAILS @150MM CTRS TO SHEET EDGES, 300MMCRS INTERNALLY
92	PLYWOOD SHEETS SHOWN BEYOND. FIX WITH 2.80 X50 FLAT HEAD NAILS @150CRS TO SHEET EDGES, 300CRS INTERNALLY

FIRST LIGHT NZ

TEAM NAME: FIRSTLIGHT NZ
ADDRESS: 139 VIVIAN STREET
TE ARO, WELLINGTON
NEWZEALAND
CONTACT: INFO@FIRSTLIGHTHOUSE.AC.NZ
WWW.FIRSTLIGHTHOUSE.AC.NZ

CONSULTANTS

TENNENT + BROWN ARCHITECTS
DUNNING THORNTON CONSULTANTS LTD
LEAP AUSTRALASIA LTD
SOUTHERN PERSPECTIVES / SOLAR CITY

CLIENT

U.S. DEPARTMENT OF ENERGY
SOLAR DECATHLON 2011
WWW.SOLARDECATHLON.GOV

U.S. DEPARTMENT OF ENERGY SOLAR DECATHLON

MARK	DATE	DESCRIPTION
CN	11-01-11	FOR CONSTRUCTION

LOT NUMBER:	LOT NUMBER
DRAWN BY:	Author
CHECKED BY:	Checker
COPYRIGHT:	VICTORIA UNIVERSITY

SHEET TITLE

WALL TYPE 2

A-412

8/13/2011 8:20:59 AM

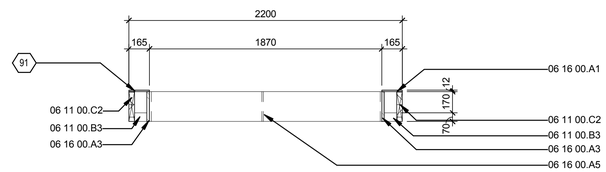

C2 WALL TYPE 3
1 : 24

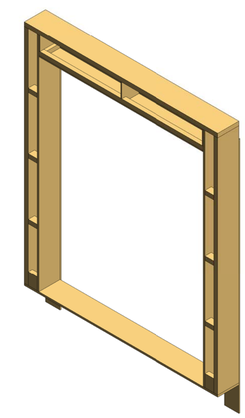

C5 WALL TYPE 3

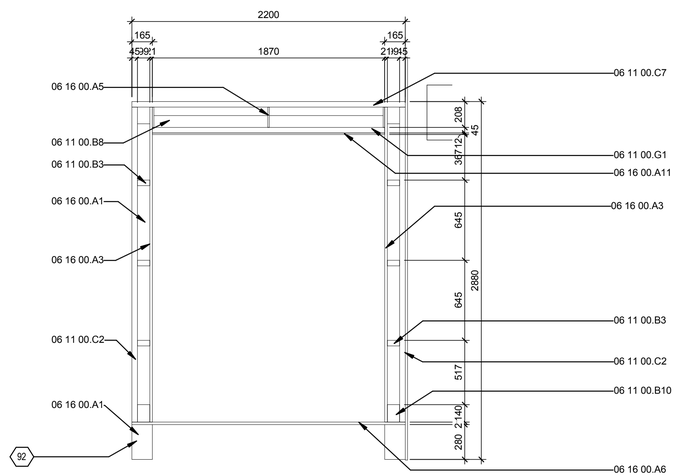

A2 WALL TYPE 3 FRAMING ELEVATION
1 : 24

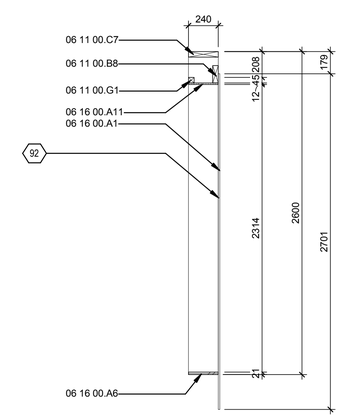

A5 WALL TYPE 3 SECTION
1 : 24

GENERAL SHEET NOTES

REFERENCE KEYNOTES

06 11 00.B3	70X45MM HORIZONTAL TIMBER
06 11 00.B8	140X45MM TIMBER AND PLYWOOD FORMING BOX BEAM LINTEL
06 11 00.B10	140X45MM HORIZONTAL TIMBER
06 11 00.C2	240X45MM LVL WALL STUD
06 11 00.C7	240X45MM TIMBER TOP PLATE
06 11 00.G1	45X45MM HORIZONTAL TIMBER
06 16 00.A1	12MM PLYWOOD BRACING SHEETS LAID VERTICALLY
06 16 00.A3	21MM PLYWOOD
06 16 00.A5	12MM PLYWOOD GUSSET @ MID SPAN AND ENDS (SHOWN ABOVE)
06 16 00.A6	21MM PLYWOOD BOTTOM PLATE
06 16 00.A11	12MM PLYWOOD LINING, TREATED AND PAINTED
06 26 40.A1	83X12MM TOUNGE AND GROOVE RIMU BOARDS NAIL FIXED THROUGH TOUNGE TO METAL BATTEN

SHEET KEYNOTES

91	FIX WITH 2.8MMØ X50 FLAT HEAD NAILS @150MM CTRS TO SHEET EDGES, 300MMCRS INTERNALLY
92	PLYWOOD SHEETS SHOWN BEYOND. FIX WITH 2.80 X50 FLAT HEAD NAILS @150CRS TO SHEET EDGES, 300CRS INTERNALLY

FIRST LIGHT NZ

TEAM NAME:	FIRSTLIGHT NZ
ADDRESS:	139 VIVIAN STREET TE ARO, WELLINGTON NEWZEALAND
CONTACT:	INFO@FIRSTLIGHTHOUSE.AC.NZ WWW.FIRSTLIGHTHOUSE.AC.NZ

CONSULTANTS

TENNENT + BROWN ARCHITECTS
DUNNING THORNTON CONSULTANTS LTD
LEAP AUSTRALASIA LTD
SOUTHERN PERSPECTIVES / SOLAR CITY

CLIENT

U.S. DEPARTMENT OF ENERGY
SOLAR DECATHLON 2011
WWW.SOLARDECATHLON.GOV

U.S. DEPARTMENT OF ENERGY SOLAR DECATHLON

MARK	DATE	DESCRIPTION
CN	11-01-11	FOR CONSTRUCTION

LOT NUMBER:	LOT NUMBER
DRAWN BY:	Author
CHECKED BY:	Checker
COPYRIGHT:	VICTORIA UNIVERSITY

SHEET TITLE

WALL TYPE 3

A-413

8/13/2011 8:21:10 AM

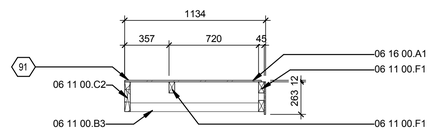

C3 WALL TYPE 4
1 : 24

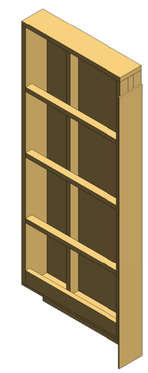

C5 WALL TYPE 4

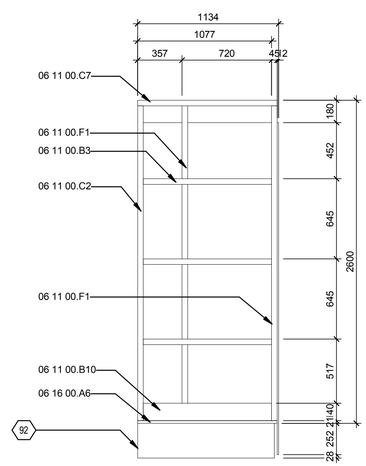

A3 WALL TYPE 4 FRAMING ELEVATION
1 : 24

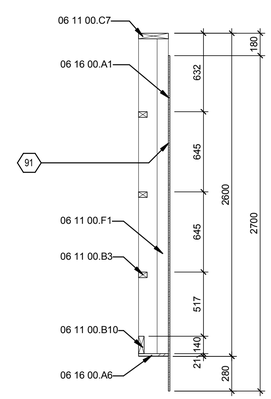

A5 WALL TYPE 4 SECTION
1 : 24

GENERAL SHEET NOTES

REFERENCE KEYNOTES

06 11 00.B3	70X45MM HORIZONTAL TIMBER
06 11 00.B10	140X45MM HORIZONTAL TIMBER
06 11 00.C2	240X45MM LVL WALL STUD
06 11 00.C7	240X45MM TIMBER TOP PLATE
06 11 00.F1	90X45MM TIMBER WALL STUD
06 16 00.A1	12MM PLYWOOD BRACING SHEETS LAID VERTICALLY
06 16 00.A6	21MM PLYWOOD BOTTOM PLATE

SHEET KEYNOTES

91	FIX WITH 2.8MMØ X50 FLAT HEAD NAILS @150MM CTRS TO SHEET EDGES, 300MMCRS INTERNALLY
92	PLYWOOD SHEETS SHOWN BEYOND. FIX WITH 2.8Ø X50 FLAT HEAD NAILS @150CRS TO SHEET EDGES, 300CRS INTERNALLY

FIRST LIGHT NZ

TEAM NAME:	FIRSTLIGHT NZ
ADDRESS:	139 VIVIAN STREET TE ARO, WELLINGTON NEWZEALAND
CONTACT:	INFO@FIRSTLIGHTHOUSE.AC.NZ WWW.FIRSTLIGHTHOUSE.AC.NZ

CONSULTANTS

TENNENT + BROWN ARCHITECTS
DUNNING THORNTON CONSULTANTS LTD
LEAP AUSTRALASIA LTD
SOUTHERN PERSPECTIVES / SOLAR CITY

CLIENT
U.S. DEPARTMENT OF ENERGY
SOLAR DECATHLON 2011
WWW.SOLARDECATHLON.GOV

U.S. DEPARTMENT OF ENERGY SOLAR DECATHLON

MARK	DATE	DESCRIPTION
CN	11-01-11	FOR CONSTRUCTION

LOT NUMBER:	LOT NUMBER
DRAWN BY:	Author
CHECKED BY:	Checker
COPYRIGHT:	VICTORIA UNIVERSITY

SHEET TITLE
WALL TYPE 4

A-414

8/13/2011 8:21:21 AM

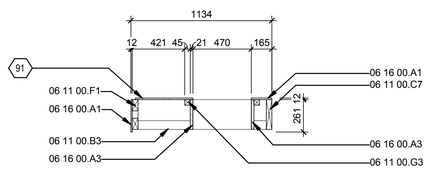

C1 WALL TYPE 5
1 : 24

0 1' 2' 4'

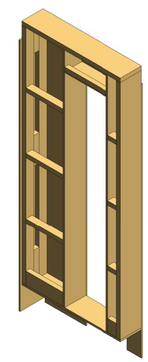

C5 WALL TYPE 5

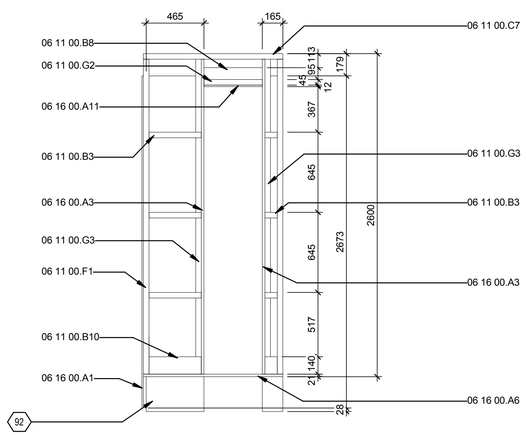

A1 WALL TYPE 5 FRAMING ELEVATION
1 : 24

0 1' 2' 4'

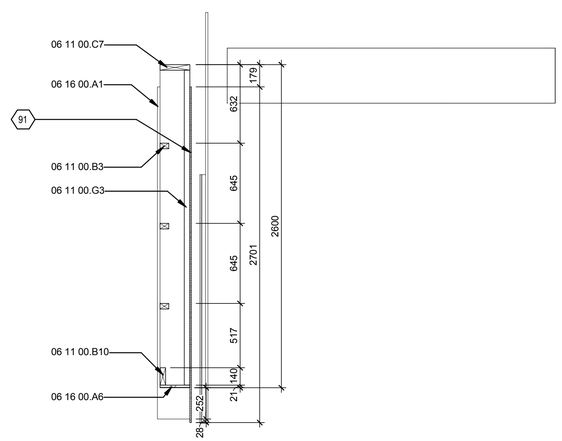

A3 WALL TYPE 5 SECTION
1 : 24

0 1' 2' 4'

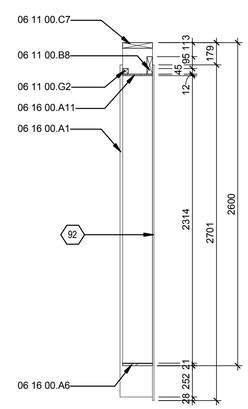

A5 WALL TYPE 5 OPENING SECTION
1 : 24

0 1' 2' 4'

GENERAL SHEET NOTES

REFERENCE KEYNOTES

06 11 00.B3	70X45MM HORIZONTAL TIMBER
06 11 00.B8	140X45MM TIMBER AND PLYWOOD FORMING BOX BEAM LINTEL
06 11 00.B10	140X45MM HORIZONTAL TIMBER
06 11 00.C7	240X45MM TIMBER TOP PLATE
06 11 00.F1	90X45MM TIMBER WALL STUD
06 11 00.G2	45X45MM BLOCKING TIMBER
06 11 00.G3	45X45MM TIMBER STUD
06 16 00.A1	12MM PLYWOOD BRACING SHEETS LAID VERTICALLY
06 16 00.A3	21MM PLYWOOD
06 16 00.A6	21MM PLYWOOD BOTTOM PLATE
06 16 00.A11	12MM PLYWOOD LINING, TREATED AND PAINTED

SHEET KEYNOTES

91	FIX WITH 2.8MMØ X50 FLAT HEAD NAILS @150MM CTRS TO SHEET EDGES, 300MMCRS INTERNALLY
92	PLYWOOD SHEETS SHOWN BEYOND. FIX WITH 2.8Ø X50 FLAT HEAD NAILS @150CRS TO SHEET EDGES, 300CRS INTERNALLY

FIRST LIGHT NZ

TEAM NAME: FIRSTLIGHT NZ

ADDRESS: 139 VIVIAN STREET
TE ARO, WELLINGTON
NEWZEALAND

CONTACT: INFO@FIRSTLIGHTHOUSE.AC.NZ
WWW.FIRSTLIGHTHOUSE.AC.NZ

CONSULTANTS

TENNENT + BROWN ARCHITECTS

DUNNING THORNTON CONSULTANTS LTD

LEAP AUSTRALASIA LTD

SOUTHERN PERSPECTIVES / SOLAR CITY

CLIENT

U.S. DEPARTMENT OF ENERGY

SOLAR DECATHLON 2011

WWW.SOLARDECATHLON.GOV

U.S. DEPARTMENT OF ENERGY SOLAR DECATHLON

MARK	DATE	DESCRIPTION
CN	11-01-11	FOR CONSTRUCTION

LOT NUMBER:	LOT NUMBER
DRAWN BY:	Author
CHECKED BY:	Checker
COPYRIGHT:	VICTORIA UNIVERSITY

SHEET TITLE

WALL TYPE 5

A-415

8/13/2011 8:21:32 AM

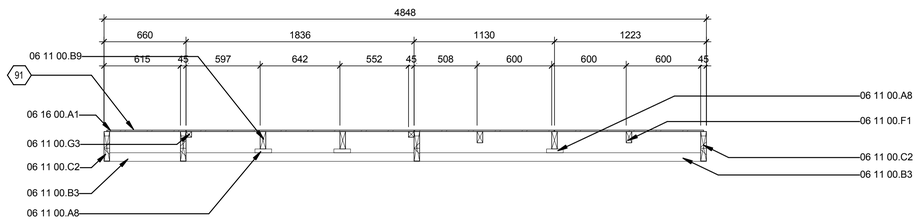

C1 WALL TYPE 6
1 : 24

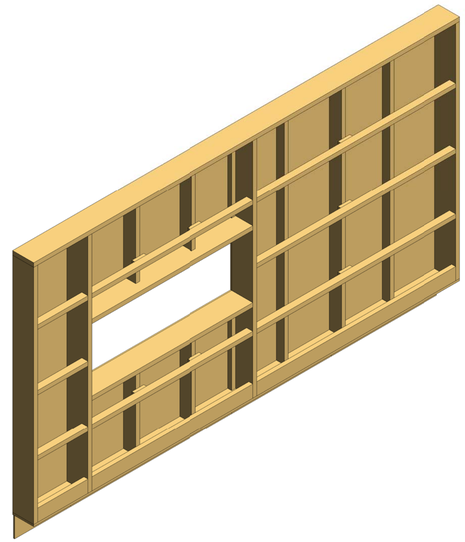

C4 WALL TYPE 6

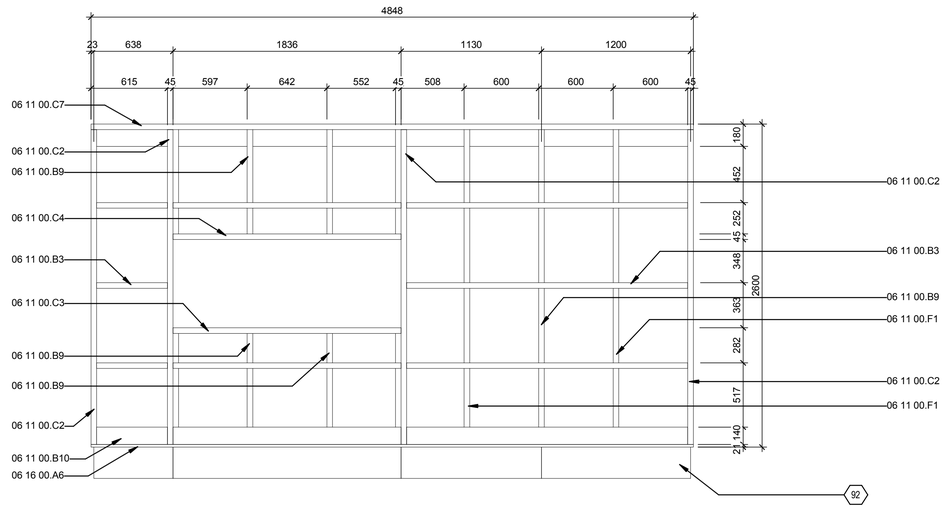

A1 WALL TYPE 6 FRAMING ELEVATION
1 : 24

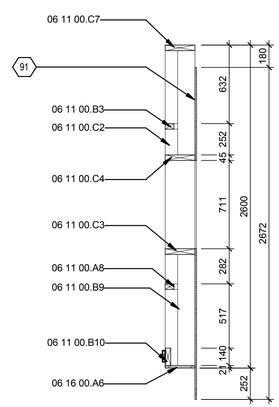

A4 WALL TYPE 6 OPENING SECTION
1 : 24

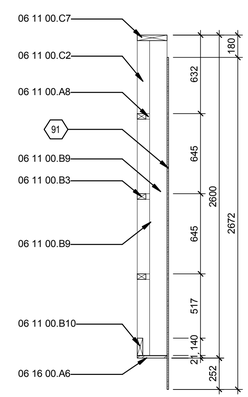

A6 WALL TYPE 6 SECTION
1 : 24

GENERAL SHEET NOTES

REFERENCE KEYNOTES

06 11 00.A8	30X45MM TIMBER BLOCKING
06 11 00.B3	70X45MM HORIZONTAL TIMBER
06 11 00.B9	140X45MM TIMBER STUD
06 11 00.B10	140X45MM HORIZONTAL TIMBER
06 11 00.C2	240X45MM LVL WALL STUD
06 11 00.C3	240X45MM TIMBER SILL
06 11 00.C4	240X45MM TIMBER HEAD
06 11 00.C7	240X45MM TIMBER TOP PLATE
06 11 00.F1	90X45MM TIMBER WALL STUD
06 11 00.G3	45X45MM TIMBER STUD
06 16 00.A1	12MM PLYWOOD BRACING SHEETS LAID VERTICALLY
06 16 00.A6	21MM PLYWOOD BOTTOM PLATE

SHEET KEYNOTES

91	FIX WITH 2.8MMØ X50 FLAT HEAD NAILS @150MM CTRS TO SHEET EDGES, 300MMCRS INTERNALLY
92	PLYWOOD SHEETS SHOWN BEYOND. FIX WITH 2.8Ø X50 FLAT HEAD NAILS @150CRS TO SHEET EDGES, 300CRS INTERNALLY

FIRST LIGHT NZ

TEAM NAME: FIRSTLIGHT NZ
ADDRESS: 139 VIVIAN STREET
TE ARO, WELLINGTON
NEWZEALAND
CONTACT: INFO@FIRSTLIGHTHOUSE.AC.NZ
WWW.FIRSTLIGHTHOUSE.AC.NZ

CONSULTANTS

TENNENT + BROWN ARCHITECTS
DUNNING THORNTON CONSULTANTS LTD
LEAP AUSTRALASIA LTD
SOUTHERN PERSPECTIVES / SOLAR CITY

CLIENT
U.S. DEPARTMENT OF ENERGY
SOLAR DECATHLON 2011
WWW.SOLARDECATHLON.GOV

U.S. DEPARTMENT OF ENERGY SOLAR DECATHLON

MARK	DATE	DESCRIPTION
CN	11-01-11	FOR CONSTRUCTION

LOT NUMBER:	LOT NUMBER
DRAWN BY:	Author
CHECKED BY:	Checker
COPYRIGHT:	VICTORIA UNIVERSITY

SHEET TITLE
WALL TYPE 6

A-417

8/13/2011 8:21:42 AM

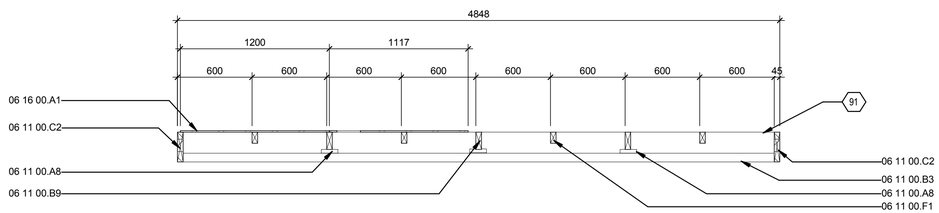

C1 WALL TYPE 7
1 : 24

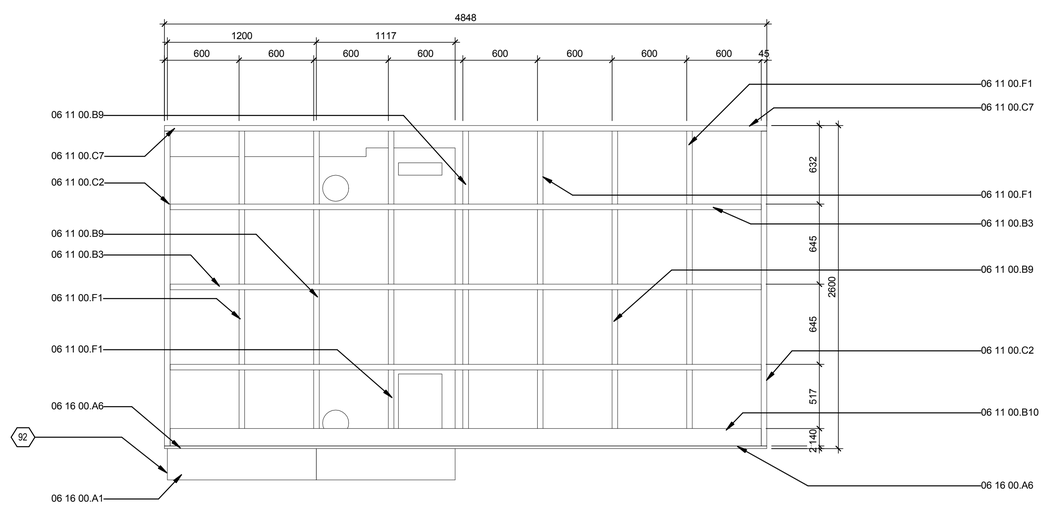

A1 WALL TYPE 7 FRAMING ELEVATION
1 : 24

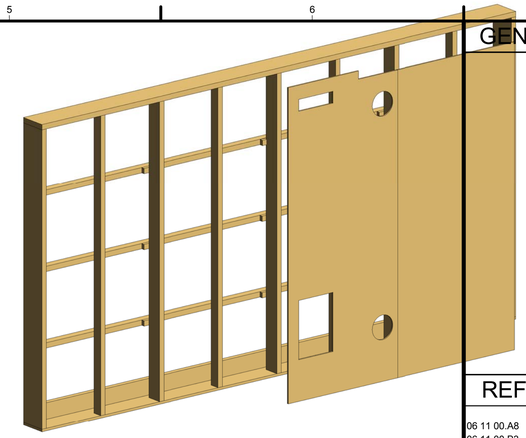

C5 WALL TYPE 7

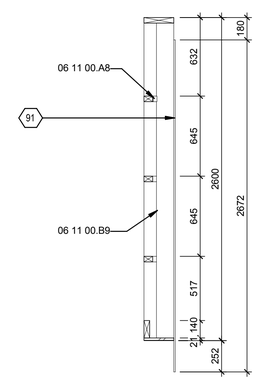

A5 WALL TYPE 7 SECTION
1 : 24

GENERAL SHEET NOTES

REFERENCE KEYNOTES

06 11 00.A8	30X45MM TIMBER BLOCKING
06 11 00.B3	70X45MM HORIZONTAL TIMBER
06 11 00.B9	140X45MM TIMBER STUD
06 11 00.B10	140X45MM HORIZONTAL TIMBER
06 11 00.C2	240X45MM LVL WALL STUD
06 11 00.C7	240X45MM TIMBER TOP PLATE
06 11 00.F1	90X45MM TIMBER WALL STUD
06 16 00.A1	12MM PLYWOOD BRACING SHEETS LAID VERTICALLY
06 16 00.A6	21MM PLYWOOD BOTTOM PLATE

SHEET KEYNOTES

91	FIX WITH 2.8MMØ X50 FLAT HEAD NAILS @150MM CTRS TO SHEET EDGES, 300MMCRS INTERNALLY
92	PLYWOOD SHEETS SHOWN BEYOND. FIX WITH 2.8Ø X50 FLAT HEAD NAILS @150CRS TO SHEET EDGES, 300CRS INTERNALLY

FIRST LIGHT NZ

TEAM NAME:	FIRSTLIGHT NZ
ADDRESS:	139 VIVIAN STREET TE ARO, WELLINGTON NEWZEALAND
CONTACT:	INFO@FIRSTLIGHTHOUSE.AC.NZ WWW.FIRSTLIGHTHOUSE.AC.NZ

CONSULTANTS

TENNENT + BROWN ARCHITECTS
DUNNING THORNTON CONSULTANTS LTD
LEAP AUSTRALASIA LTD
SOUTHERN PERSPECTIVES / SOLAR CITY

CLIENT

U.S. DEPARTMENT OF ENERGY
SOLAR DECATHLON 2011
WWW.SOLARDECATHLON.GOV

U.S. DEPARTMENT OF ENERGY SOLAR DECATHLON

MARK	DATE	DESCRIPTION
CN	11-01-11	FOR CONSTRUCTION

LOT NUMBER:	LOT NUMBER
DRAWN BY:	Author
CHECKED BY:	Checker
COPYRIGHT:	VICTORIA UNIVERSITY

SHEET TITLE

WALL TYPE 7

A-419

8/13/2011 8:21:53 AM

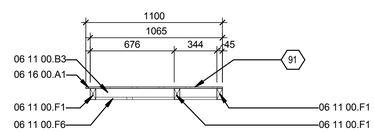

C3 WALL TYPE 8
1 : 24

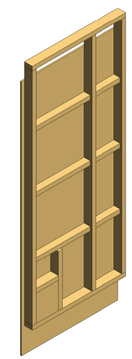

C5 WALL TYPE 8

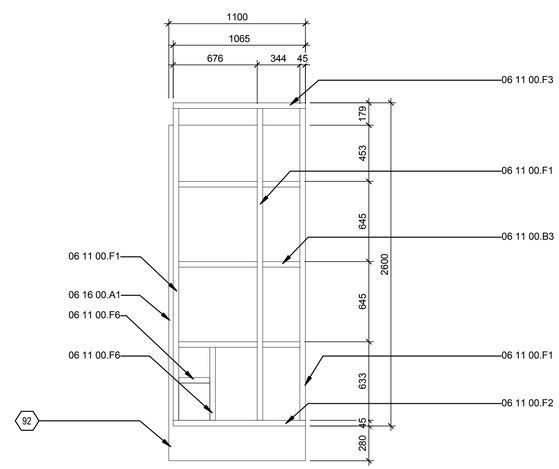

A3 WALL TYPE 8 FRAMING ELEVATION
1 : 24

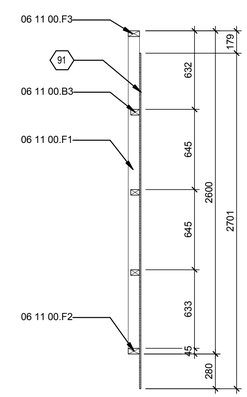

A5 WALL TYPE 8 SECTION
1 : 24

GENERAL SHEET NOTES

REFERENCE KEYNOTES

06 11 00.B3	70X45MM HORIZONTAL TIMBER
06 11 00.F1	90X45MM TIMBER WALL STUD
06 11 00.F2	90X45MM TIMBER BOTTOM PLATE
06 11 00.F3	90X45MM TIMBER TOP PLATE
06 11 00.F6	90X45MM TIMBER BLOCKING
06 16 00.A1	12MM PLYWOOD BRACING SHEETS LAID VERTICALLY

SHEET KEYNOTES

91	FIX WITH 2.8MMØ X50 FLAT HEAD NAILS @150MM CTRS TO SHEET EDGES, 300MMCRS INTERNALLY
92	PLYWOOD SHEETS SHOWN BEYOND. FIX WITH 2.8Ø X50 FLAT HEAD NAILS @150CRS TO SHEET EDGES, 300CRS INTERNALLY

FIRST LIGHT NZ

TEAM NAME:	FIRSTLIGHT NZ
ADDRESS:	139 VIVIAN STREET TE ARO, WELLINGTON NEWZEALAND
CONTACT:	INFO@FIRSTLIGHTHOUSE.AC.NZ WWW.FIRSTLIGHTHOUSE.AC.NZ

CONSULTANTS

TENNENT + BROWN ARCHITECTS
DUNNING THORNTON CONSULTANTS LTD
LEAP AUSTRALASIA LTD
SOUTHERN PERSPECTIVES / SOLAR CITY

CLIENT

U.S. DEPARTMENT OF ENERGY
SOLAR DECATHLON 2011
WWW.SOLARDECATHLON.GOV

U.S. DEPARTMENT OF ENERGY SOLAR DECATHLON

MARK	DATE	DESCRIPTION
CN	11-01-11	FOR CONSTRUCTION

LOT NUMBER:	LOT NUMBER
DRAWN BY:	Author
CHECKED BY:	Checker
COPYRIGHT:	VICTORIA UNIVERSITY

SHEET TITLE

WALL TYPE 8

A-420

8/13/2011 8:22:03 AM

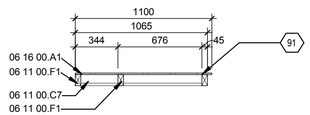

C3 WALL TYPE 9
1 : 24

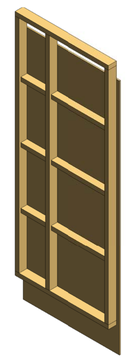

C5 WALL TYPE 9

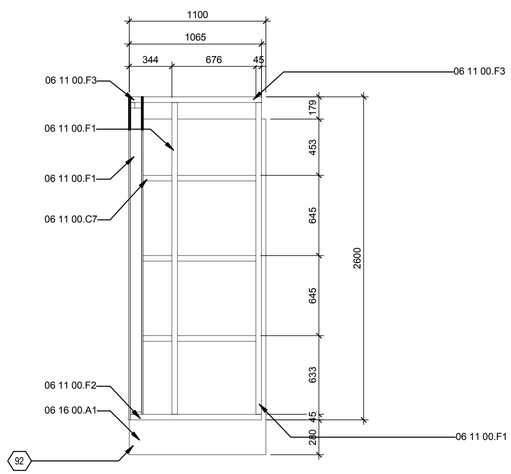

A3 WALL TYPE 9 FRAMING ELEVATION
1 : 24

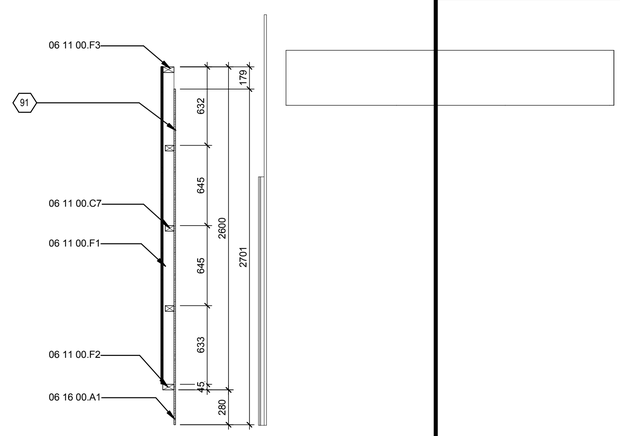

A5 WALL TYPE 9 SECTION
1 : 24

GENERAL SHEET NOTES

REFERENCE KEYNOTES

06 11 00.C7	240X45MM TIMBER TOP PLATE
06 11 00.F1	90X45MM TIMBER WALL STUD
06 11 00.F2	90X45MM TIMBER BOTTOM PLATE
06 11 00.F3	90X45MM TIMBER TOP PLATE
06 16 00.A1	12MM PLYWOOD BRACING SHEETS LAID VERTICALLY

SHEET KEYNOTES

91	FIX WITH 2.8MMØ X50 FLAT HEAD NAILS @150MM CTRS TO SHEET EDGES, 300MMCRS INTERNALLY
92	PLYWOOD SHEETS SHOWN BEYOND. FIX WITH 2.8Ø X50 FLAT HEAD NAILS @150CRS TO SHEET EDGES, 300CRS INTERNALLY

FIRST LIGHT NZ

TEAM NAME:	FIRSTLIGHT NZ
ADDRESS:	139 VIVIAN STREET TE ARO, WELLINGTON NEWZEALAND
CONTACT:	INFO@FIRSTLIGHTHOUSE.AC.NZ WWW.FIRSTLIGHTHOUSE.AC.NZ

CONSULTANTS

TENNENT + BROWN ARCHITECTS

DUNNING THORNTON CONSULTANTS LTD

LEAP AUSTRALASIA LTD

SOUTHERN PERSPECTIVES / SOLAR CITY

CLIENT

U.S. DEPARTMENT OF ENERGY

SOLAR DECATHLON 2011

WWW.SOLARDECATHLON.GOV

U.S. DEPARTMENT OF ENERGY SOLAR DECATHLON

MARK	DATE	DESCRIPTION
CN	11-01-11	FOR CONSTRUCTION

LOT NUMBER:	LOT NUMBER
DRAWN BY:	Author
CHECKED BY:	Checker
COPYRIGHT:	VICTORIA UNIVERSITY

SHEET TITLE

WALL TYPE 9

A-421

8/13/2011 8:22:14 AM

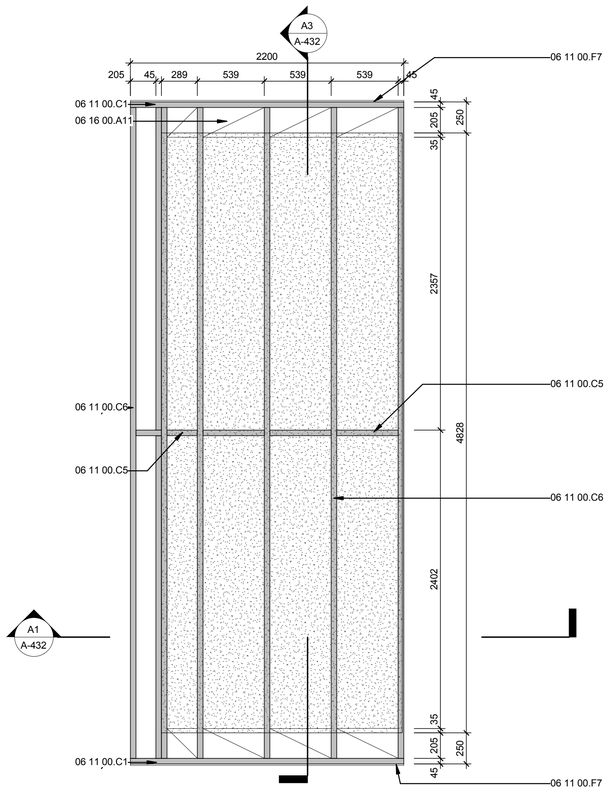

C1 FLOOR TYPE 1 - PLAN
1 : 24

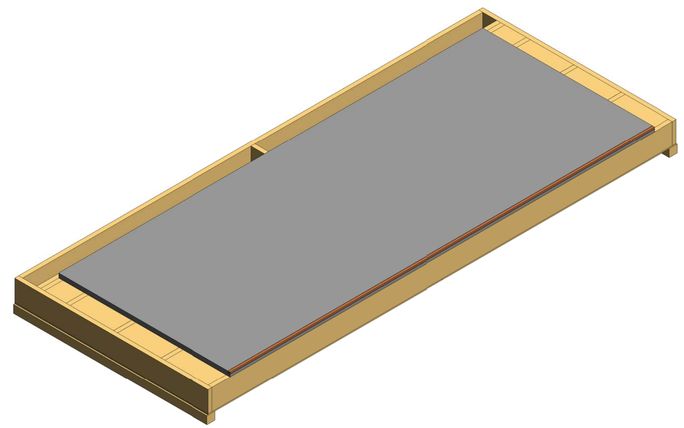

C3 FLOOR TYPE 1

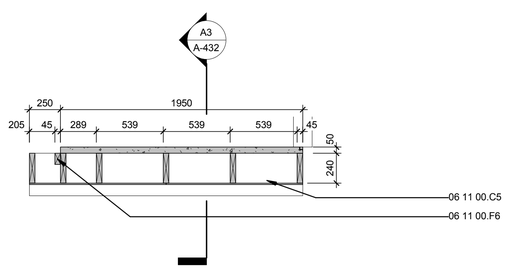

A1 FLOOR TYPE 1 - TRANSVERSE SECTION
1 : 24

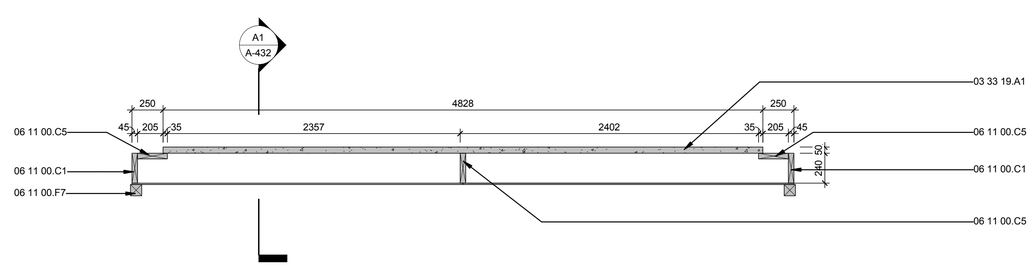

A3 FLOOR TYPE 1 - LONGITUDIONAL SECTION
1 : 24

GENERAL SHEET NOTES

REFERENCE KEYNOTES

03 33 19.A1	50MM FLEXUS ENGINEERED CEMENTITIOUS COMPOSITE CONCRETE FLOOR WITH 10MM ARDEX PANDOMO K1 LEVELLING COMPOUND. CONCRETE FIXED WITH COMPOSITE FLOOR SHEAR CONNECTORS TO TIMBER JOISTS (REFER ENGINEERS SKETCH DETAIL FOR FIXING)
06 11 00.C1	240X45MM LVL TRIMMING JOIST
06 11 00.C5	240X45MM TIMBER BLOCKING
06 11 00.C6	240X45MM LVL FLOOR JOIST
06 11 00.F6	90X45MM TIMBER BLOCKING
06 11 00.F7	90X90MM TIMBER EDGE BLOCK, NOTCHED AROUND PLYWOOD
06 16 00.A11	12MM PLYWOOD LINING, TREATED AND PAINTED

SHEET KEYNOTES

FIRST LIGHT NZ

TEAM NAME:	FIRSTLIGHT NZ
ADDRESS:	139 VIVIAN STREET TE ARO, WELLINGTON NEWZEALAND
CONTACT:	INFO@FIRSTLIGHTHOUSE.AC.NZ WWW.FIRSTLIGHTHOUSE.AC.NZ

CONSULTANTS

TENNENT + BROWN ARCHITECTS
DUNNING THORNTON CONSULTANTS LTD
LEAP AUSTRALASIA LTD
SOUTHERN PERSPECTIVES / SOLAR CITY

CLIENT

U.S. DEPARTMENT OF ENERGY
SOLAR DECATHLON 2011
WWW.SOLARDECATHLON.GOV

U.S. DEPARTMENT OF ENERGY SOLAR DECATHLON

MARK	DATE	DESCRIPTION
CN	11-01-11	FOR CONSTRUCTION

LOT NUMBER:	LOT NUMBER
DRAWN BY:	Author
CHECKED BY:	Checker
COPYRIGHT:	VICTORIA UNIVERSITY

SHEET TITLE

FL01-1

A-432

8/13/2011 8:22:26 AM

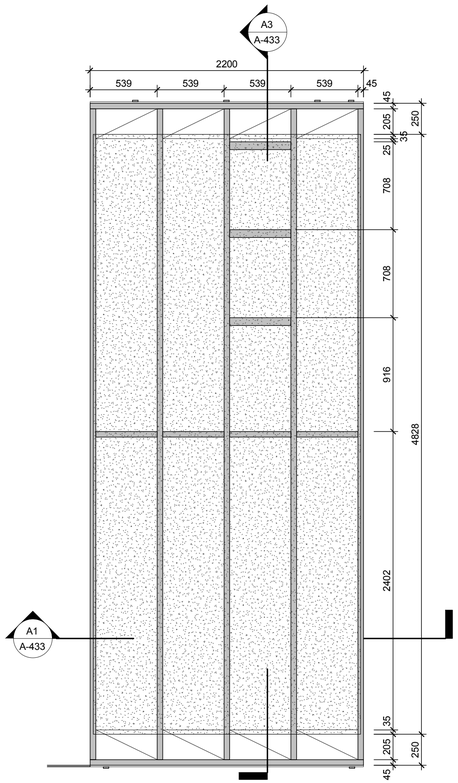

C1 FLOOR TYPE 2 - PLAN
1 : 24

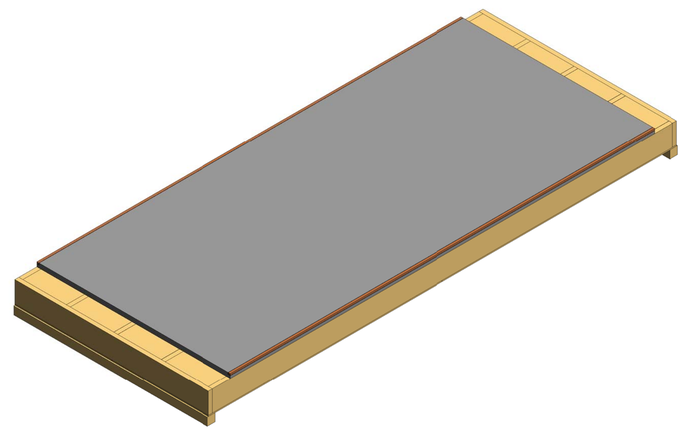

C2 FLOOR TYPE 2

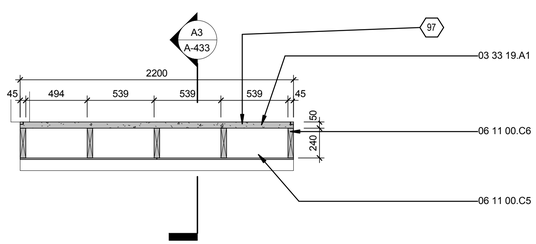

A1 FLOOR TYPE 2 - TRANSVERSE SECTION
1 : 24

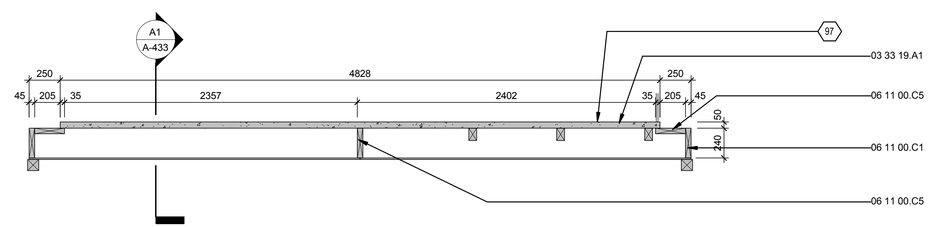

A3 FLOOR TYPE 2 - LONGITUDIONAL SECTION
1 : 24

0 1' 2' 4'

GENERAL SHEET NOTES

REFERENCE KEYNOTES

03 33 19.A1	50MM FLEXUS ENGINEERED CEMENTITIOUS COMPOSITE CONCRETE FLOOR WITH 10MM ARDEX PANDOMO K1 LEVELLING COMPOUND. CONCRETE FIXED WITH COMPOSITE FLOOR SHEAR CONNECTORS TO TIMBER JOISTS (REFER ENGINEERS SKETCH DETAIL FOR FIXING)
06 11 00.C1	240X45MM LVL TRIMMING JOIST
06 11 00.C5	240X45MM TIMBER BLOCKING
06 11 00.C6	240X45MM LVL FLOOR JOIST

SHEET KEYNOTES

97	FIXED WITH COMPOSITE FLOOR SHEAR CONNECTORS

FIRST LIGHT NZ

TEAM NAME:	FIRSTLIGHT NZ
ADDRESS:	139 VIVIAN STREET TE ARO, WELLINGTON NEWZEALAND
CONTACT:	INFO@FIRSTLIGHTHOUSE.AC.NZ WWW.FIRSTLIGHTHOUSE.AC.NZ

CONSULTANTS

TENNENT + BROWN ARCHITECTS
DUNNING THORNTON CONSULTANTS LTD
LEAP AUSTRALASIA LTD
SOUTHERN PERSPECTIVES / SOLAR CITY

CLIENT

U.S. DEPARTMENT OF ENERGY
SOLAR DECATHLON 2011
WWW.SOLARDECATHLON.GOV

U.S. DEPARTMENT OF ENERGY SOLAR DECATHLON

MARK	DATE	DESCRIPTION
CN	11-01-11	FOR CONSTRUCTION

LOT NUMBER:	LOT NUMBER
DRAWN BY:	Author
CHECKED BY:	Checker
COPYRIGHT:	VICTORIA UNIVERSITY

SHEET TITLE

FL02-2

A-433

8/13/2011 8:22:37 AM

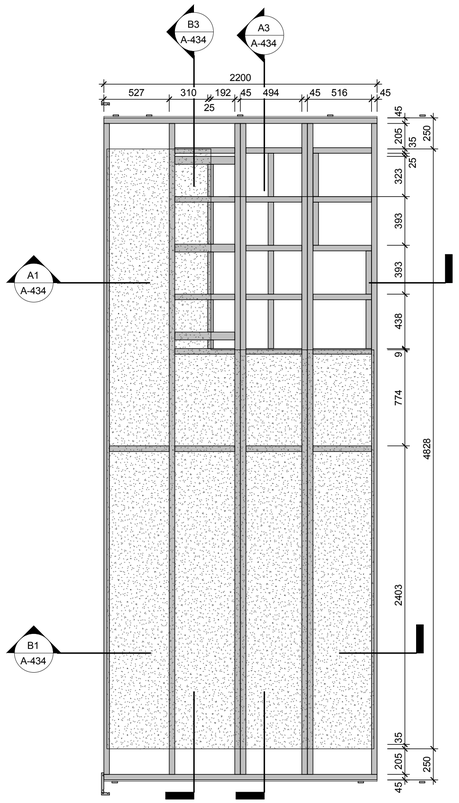

C1 FLOOR TYPE 4 - PLAN
1 : 24

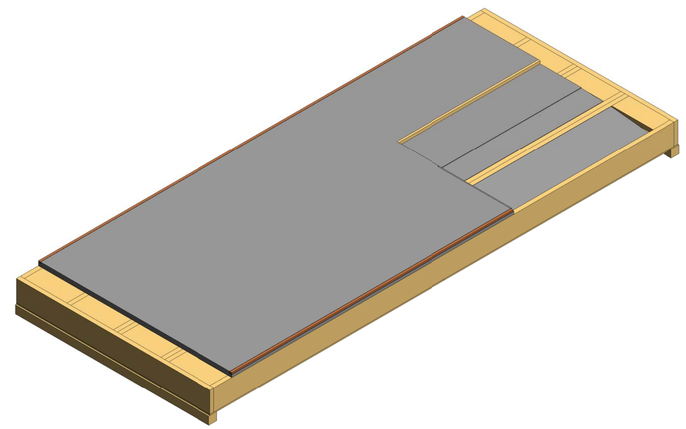

C3 FLOOR TYPE 4

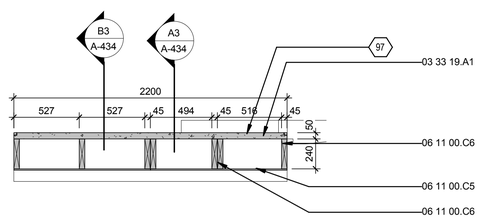

B1 FLOOR TYPE 4 - TRANSVERSE SECTION 1
1 : 24

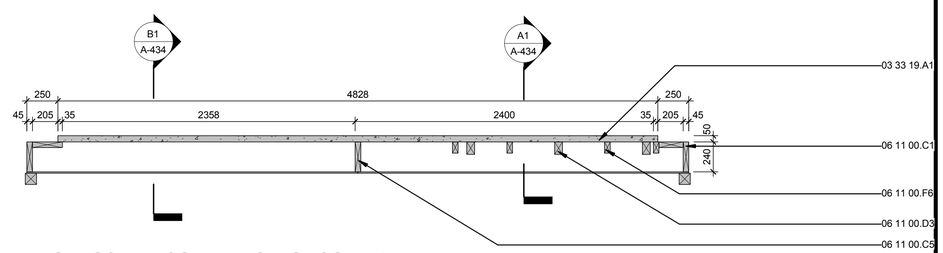

B3 FLOOR TYPE 4 - LONGITUDIONAL SECTION 1
1 : 24

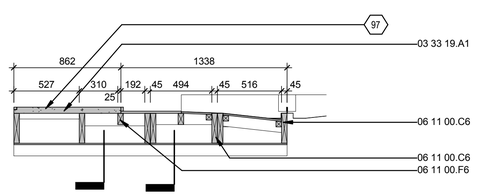

A1 FLOOR TYPE 4 - TRANSVERSE SECTION 2
1 : 24

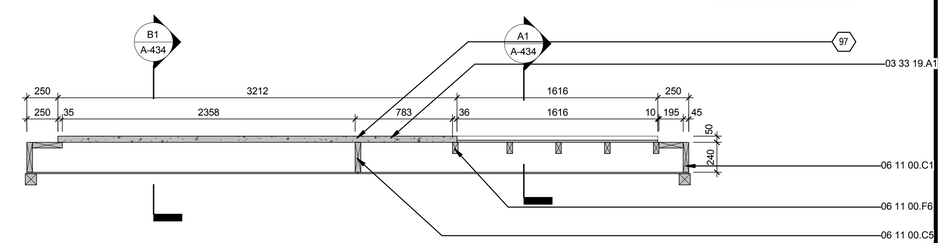

A3 FLOOR TYPE 4 - LONGITUDIONAL SECTION 2
1 : 24

GENERAL SHEET NOTES

REFERENCE KEYNOTES

03 33 19.A1	50MM FLEXUS ENGINEERED CEMENTITIOUS COMPOSITE CONCRETE FLOOR WITH 10MM ARDEX PANDOMO K1 LEVELLING COMPOUND. CONCRETE FIXED WITH COMPOSITE FLOOR SHEAR CONNECTORS TO TIMBER JOISTS (REFER ENGINEERS SKETCH DETAIL FOR FIXING)
06 11 00.C1	240X45MM LVL TRIMMING JOIST
06 11 00.C5	240X45MM TIMBER BLOCKING
06 11 00.C6	240X45MM LVL FLOOR JOIST
06 11 00.D3	100X63MM LVL NOGS. 2 MULTI GRIPS EACH END CUT TO SHOWER FALLS (REFER ENGINEERS SKETCH DETAIL SK13 FOR FIXING)
06 11 00.F6	90X45MM TIMBER BLOCKING

SHEET KEYNOTES

97	FIXED WITH COMPOSITE FLOOR SHEAR CONNECTORS

FIRST LIGHT NZ

TEAM NAME:	FIRSTLIGHT NZ
ADDRESS:	139 VIVIAN STREET TE ARO, WELLINGTON NEWZEALAND
CONTACT:	INFO@FIRSTLIGHTHOUSE.AC.NZ WWW.FIRSTLIGHTHOUSE.AC.NZ

CONSULTANTS

TENNENT + BROWN ARCHITECTS
DUNNING THORNTON CONSULTANTS LTD
LEAP AUSTRALASIA LTD
SOUTHERN PERSPECTIVES / SOLAR CITY

CLIENT

U.S. DEPARTMENT OF ENERGY
SOLAR DECATHLON 2011
WWW.SOLARDECATHLON.GOV

U.S. DEPARTMENT OF ENERGY SOLAR DECATHLON

MARK	DATE	DESCRIPTION
CN	11-01-11	FOR CONSTRUCTION

LOT NUMBER:	LOT NUMBER
DRAWN BY:	Author
CHECKED BY:	Checker
COPYRIGHT:	VICTORIA UNIVERSITY

SHEET TITLE

FL05-4

A-434

8/13/2011 8:22:50 AM

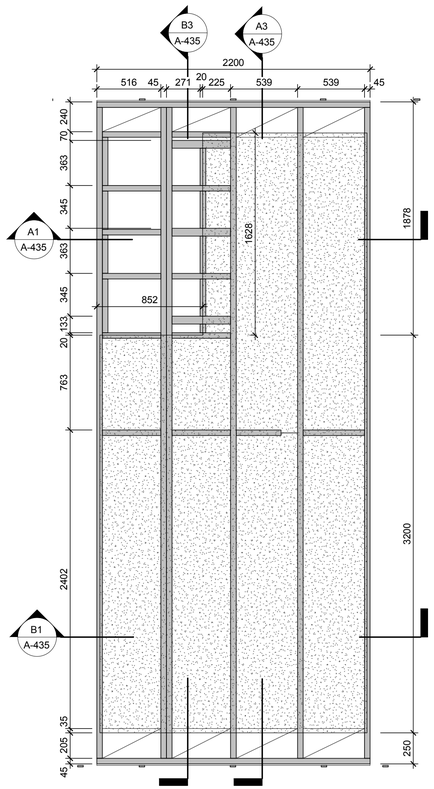

C1 FLOOR TYPE 5 - PLAN
1 : 24

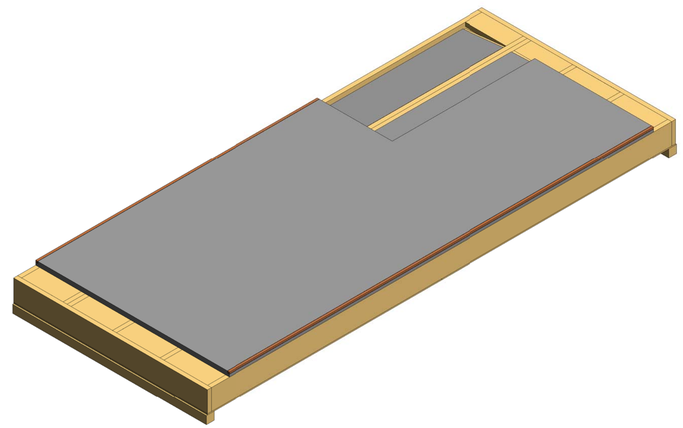

C3 FLOOR TYPE 5

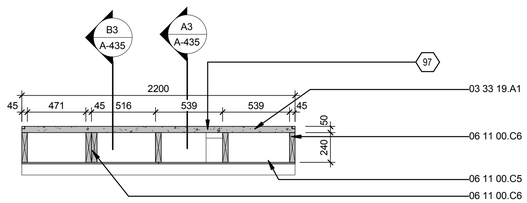

B1 FLOOR TYPE 5 - TRANSVERSE SECTION 1
1 : 24

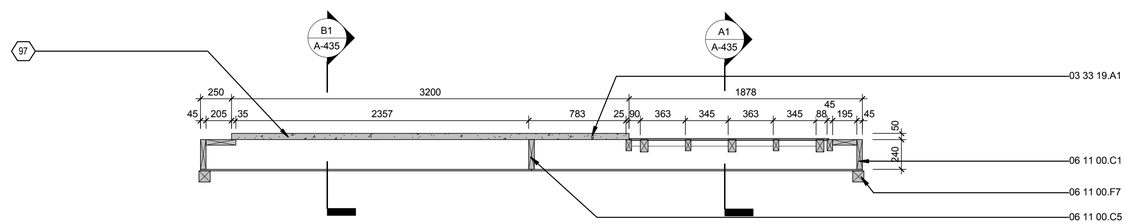

B3 FLOOR TYPE 5 - LONGITUDIONAL SECTION 1
1 : 24

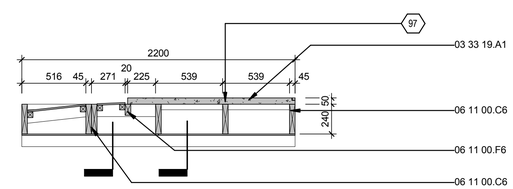

A1 FLOOR TYPE 5 - TRANSVERSE SECTION 2
1 : 24

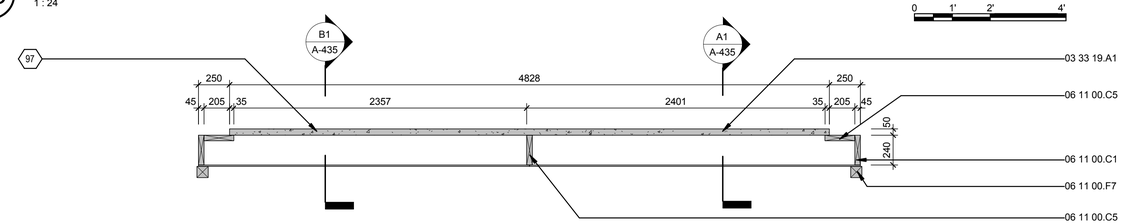

A3 FLOOR TYPE 5 - LONGITUDIONAL SECTION 2
1 : 24

GENERAL SHEET NOTES

REFERENCE KEYNOTES

03 33 19.A1	50MM FLEXUS ENGINEERED CEMENTITIOUS COMPOSITE CONCRETE FLOOR WITH 10MM ARDEX PANDOMO K1 LEVELLING COMPOUND. CONCRETE FIXED WITH COMPOSITE FLOOR SHEAR CONNECTORS TO TIMBER JOISTS (REFER ENGINEERS SKETCH DETAIL FOR FIXING)
06 11 00.C1	240X45MM LVL TRIMMING JOIST
06 11 00.C5	240X45MM TIMBER BLOCKING
06 11 00.C6	240X45MM LVL FLOOR JOIST
06 11 00.F6	90X45MM TIMBER BLOCKING
06 11 00.F7	90X90MM TIMBER EDGE BLOCK, NOTCHED AROUND PLYWOOD

SHEET KEYNOTES

97	FIXED WITH COMPOSITE FLOOR SHEAR CONNECTORS

FIRST LIGHT NZ

TEAM NAME:	FIRSTLIGHT NZ
ADDRESS:	139 VIVIAN STREET TE ARO, WELLINGTON NEWZEALAND
CONTACT:	INFO@FIRSTLIGHTHOUSE.AC.NZ WWW.FIRSTLIGHTHOUSE.AC.NZ

CONSULTANTS

TENNENT + BROWN ARCHITECTS
DUNNING THORNTON CONSULTANTS LTD
LEAP AUSTRALASIA LTD
SOUTHERN PERSPECTIVES / SOLAR CITY

CLIENT

U.S. DEPARTMENT OF ENERGY
SOLAR DECATHLON 2011
WWW.SOLARDECATHLON.GOV

U.S. DEPARTMENT OF ENERGY SOLAR DECATHLON

MARK	DATE	DESCRIPTION
CN	11-01-11	FOR CONSTRUCTION

LOT NUMBER:	LOT NUMBER
DRAWN BY:	Author
CHECKED BY:	Checker
COPYRIGHT:	VICTORIA UNIVERSITY

SHEET TITLE

FL06-5

A-435

8/13/2011 8:23:02 AM

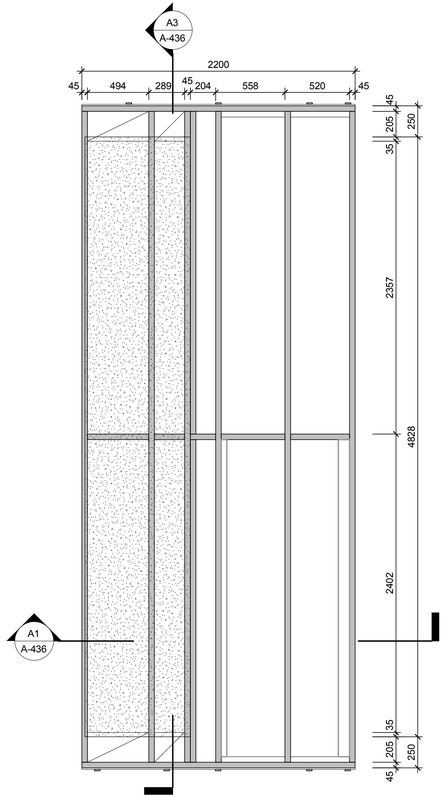

C1 FLOOR TYPE 6 - PLAN
1 : 24

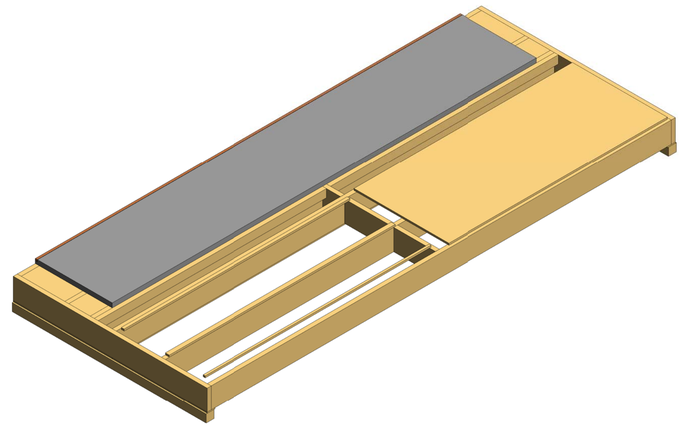

C3 FLOOR TYPE 6

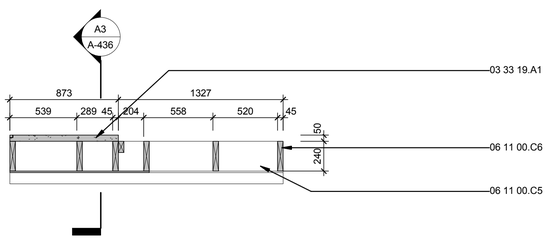

A1 FLOOR TYPE 6 - TRANSVERSE SECTION
1 : 24

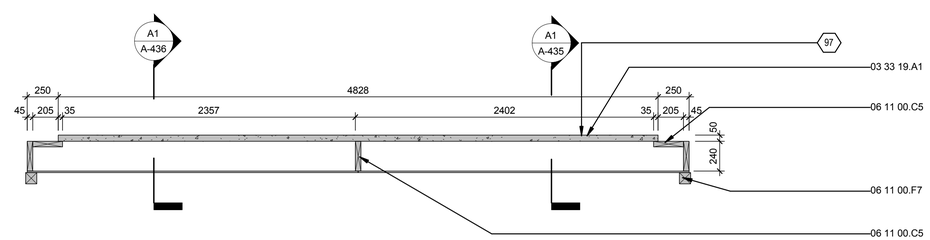

A3 FLOOR TYPE 6 - LONGITUDIONAL SECTION
1 : 24

GENERAL SHEET NOTES

REFERENCE KEYNOTES

03 33 19.A1	50MM FLEXUS ENGINEERED CEMENTITIOUS COMPOSITE CONCRETE FLOOR WITH 10MM ARDEX PANDOMO K1 LEVELLING COMPOUND. CONCRETE FIXED WITH COMPOSITE FLOOR SHEAR CONNECTORS TO TIMBER JOISTS (REFER ENGINEERS SKETCH DETAIL FOR FIXING)
06 11 00.C5	240X45MM TIMBER BLOCKING
06 11 00.C6	240X45MM LVL FLOOR JOIST
06 11 00.F7	90X90MM TIMBER EDGE BLOCK, NOTCHED AROUND PLYWOOD

SHEET KEYNOTES

97	FIXED WITH COMPOSITE FLOOR SHEAR CONNECTORS

FIRST LIGHT NZ

TEAM NAME:	FIRST LIGHT
ADDRESS:	139 VIVIAN STREET TE ARO, WELLINGTON NEWZEALAND
CONTACT:	ELINUTTALL@GMAIL.COM WWW.FIRSTLIGHTHOUSE.AC.NZ

CONSULTANTS

TENNENT + BROWN ARCHITECTS
DUNNING THORNTON CONSULTANTS LTD
LEAP AUSTRALASIA LTD
SOUTHERN PERSPECTIVES / SOLAR CITY

CLIENT

U.S. DEPARTMENT OF ENERGY
SOLAR DECATHLON 2011
WWW.SOLARDECATHLON.GOV

U.S. DEPARTMENT OF ENERGY SOLAR DECATHLON

MARK	DATE	DESCRIPTION
CN	11-01-11	FOR CONSTRUCTION

LOT NUMBER:	LOT NUMBER
DRAWN BY:	Author
CHECKED BY:	Checker
COPYRIGHT:	

SHEET TITLE

FL07-6

A-436

8/13/2011 8:23:13 AM

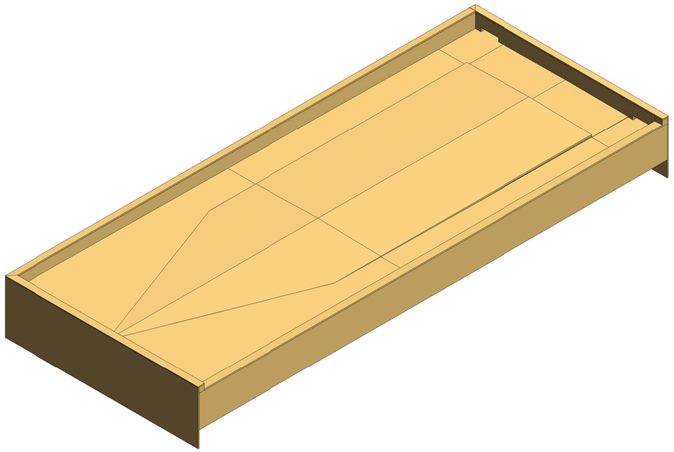

1 ROOF TYPE 1

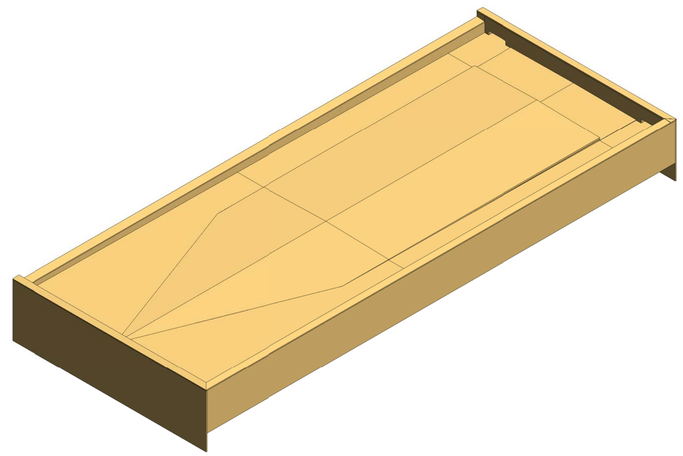

2 ROOF TYPE 2

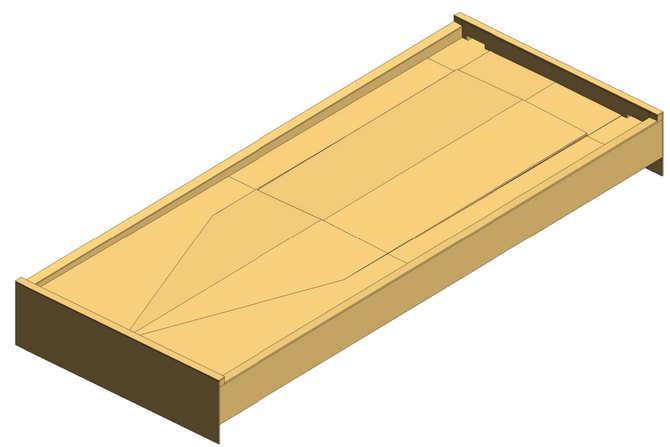

3 ROOF TYPE 3

GENERAL SHEET NOTES

REFERENCE KEYNOTES

SHEET KEYNOTES

FIRST LIGHT NZ

TEAM NAME:	FIRSTLIGHT NZ
ADDRESS:	139 VIVIAN STREET TE ARO, WELLINGTON NEWZEALAND
CONTACT:	INFO@FIRSTLIGHTHOUSE.AC.NZ WWW.FIRSTLIGHTHOUSE.AC.NZ

CONSULTANTS

TENNENT + BROWN ARCHITECTS
DUNNING THORNTON CONSULTANTS LTD
LEAP AUSTRALASIA LTD
SOUTHERN PERSPECTIVES / SOLAR CITY

CLIENT

U.S. DEPARTMENT OF ENERGY
SOLAR DECATHLON 2011
WWW.SOLARDECATHLON.GOV

U.S. DEPARTMENT OF ENERGY SOLAR DECATHLON

MARK	DATE	DESCRIPTION
CN	11-01-11	FOR CONSTRUCTION

LOT NUMBER:	LOT NUMBER
DRAWN BY:	Author
CHECKED BY:	Checker
COPYRIGHT:	VICTORIA UNIVERSITY

SHEET TITLE

ROOF TYPES - ISOMETRIC

A-441

8/13/2011 8:23:25 AM

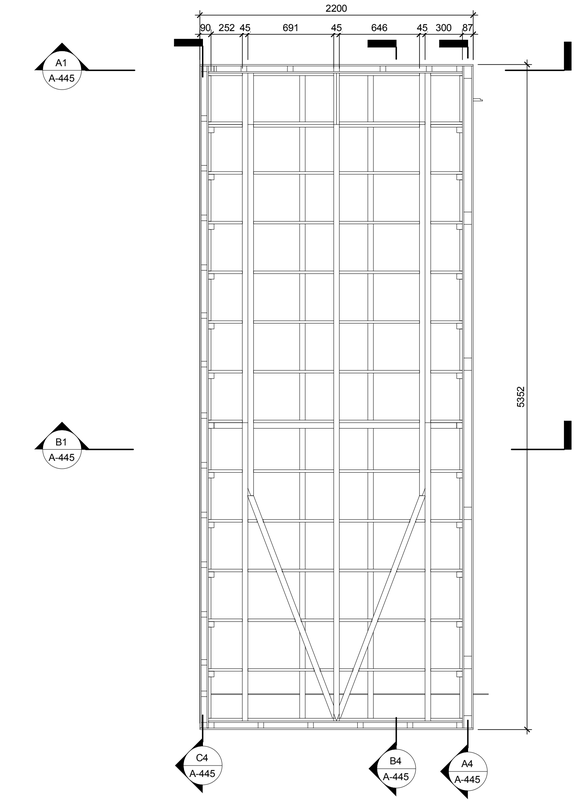

C1 ROOF TYPE 1 FRAMING PLAN
1 : 24

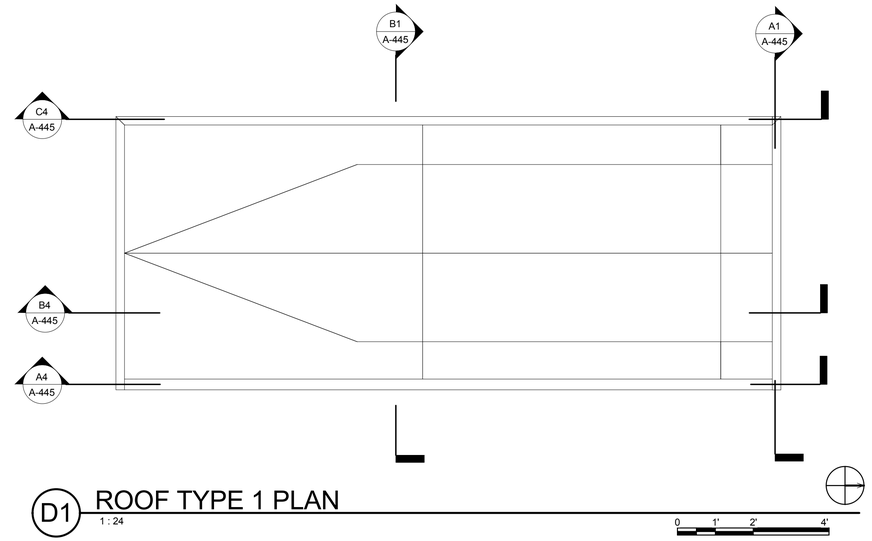

D1 ROOF TYPE 1 PLAN
1 : 24

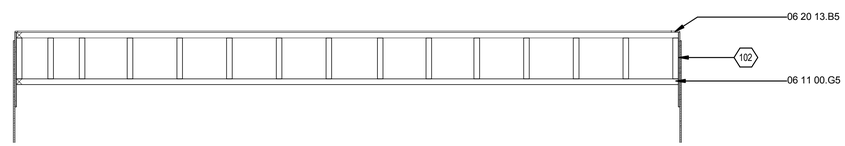

C4 ROOF TYPE 1 LONGITUDINAL SECTION BOX BEAM
1 : 24

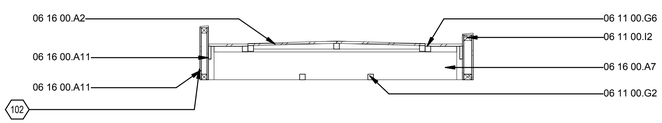

B1 ROOF TYPE 1 TRANSVERSE SECTION
1 : 24

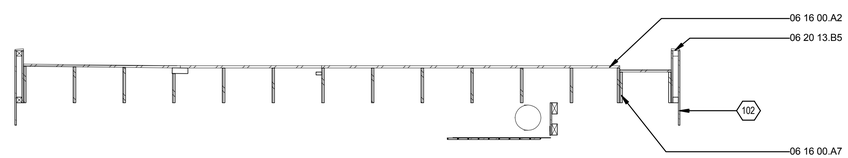

B4 ROOF TYPE 1 LONGITUDINAL SECTION
1 : 24

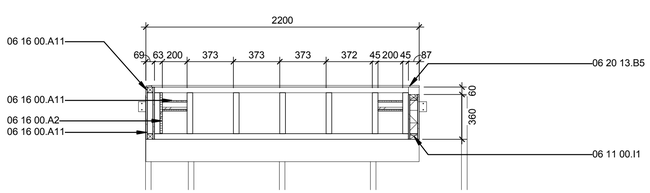

A1 ROOF TYPE 1 TRANSVERSE SECTION END BOX BEAM
1 : 24

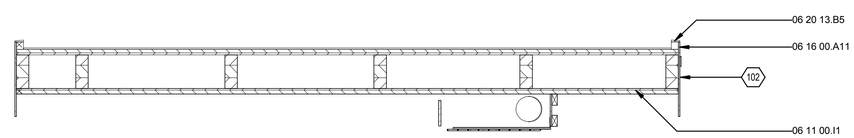

A4 ROOF TYPE 1 LONGITUDINAL SECTION LVL BOX BEAM
1 : 24

GENERAL SHEET NOTES

REFERENCE KEYNOTES

06 11 00.G2	45X45MM BLOCKING TIMBER
06 11 00.G5	45X45MM TIMBER PLYWOOD BOX BEAM BOTTOM CHORD
06 11 00.G6	45X45MM CONTINUOUS TIMBER
06 11 00.I1	63X45MM LVL PLYWOOD BOX BEAM TOP CHORD
06 11 00.I2	63X45MM LVL PLYWOOD BOX BEAM BOTTOM CHORD
06 16 00.A2	18MM PLYWOOD
06 16 00.A7	21MM PLYWOOD RIBS AT 400M CENTRES. CNC CUT TO FALLS.
06 16 00.A11	12MM PLYWOOD LINING, TREATED AND PAINTED
06 20 13.B5	TIMBER PARAPET FURRING TO ACHIEVE PARAPET FALL

SHEET KEYNOTES

102	12MM OUTER PLYWOOD WEB OF ALL BOXBEAMS TO BE SUPPLIED LOOSE FOR CONSTRUCTION PHASE TWO

FIRST LIGHT NZ

TEAM NAME: FIRSTLIGHT NZ
ADDRESS: 139 VIVIAN STREET TE ARO, WELLINGTON NEWZEALAND
CONTACT: INFO@FIRSTLIGHTHOUSE.AC.NZ WWW.FIRSTLIGHTHOUSE.AC.NZ

CONSULTANTS

TENNENT + BROWN ARCHITECTS
DUNNING THORNTON CONSULTANTS LTD
LEAP AUSTRALASIA LTD
SOUTHERN PERSPECTIVES / SOLAR CITY

CLIENT

U.S. DEPARTMENT OF ENERGY
SOLAR DECATHLON 2011
WWW.SOLARDECATHLON.GOV

U.S. DEPARTMENT OF ENERGY SOLAR DECATHLON

MARK	DATE	DESCRIPTION
CN	11-01-11	FOR CONSTRUCTION

LOT NUMBER:	LOT NUMBER
DRAWN BY:	Author
CHECKED BY:	Checker
COPYRIGHT:	VICTORIA UNIVERSITY

SHEET TITLE

ROOF TYPE 1 - CONSTRUCTION DRAWINGS

A-445

8/13/2011 8:23:31 AM

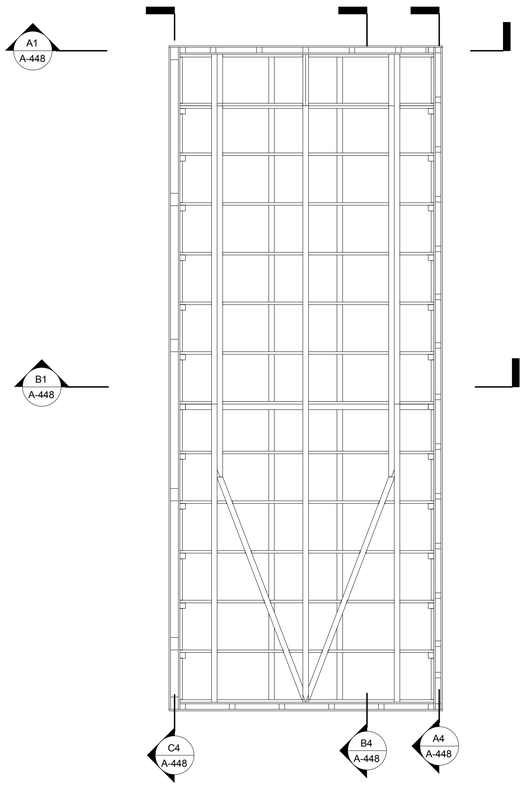

C1 ROOF TYPE 2 FRAMING PLAN
1 : 24

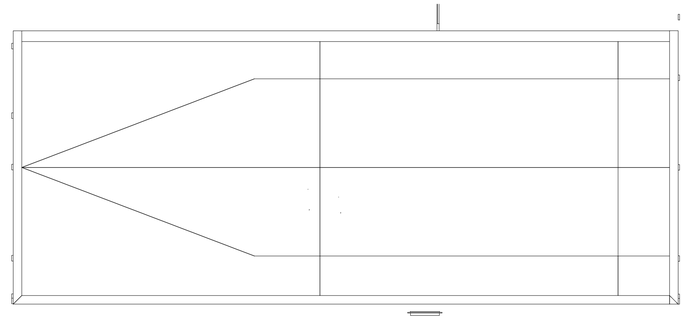

D4 ROOF TYPE 2 PLAN
1 : 24

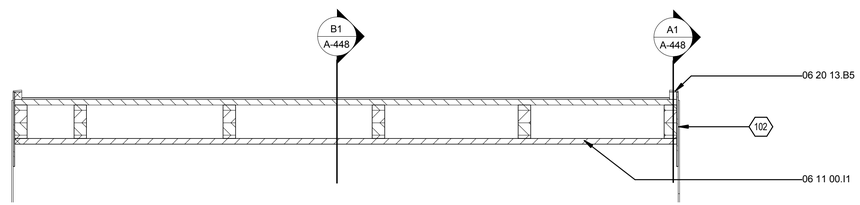

C4 ROOF TYPE 2 LONGITUDINAL SECTION LV BOX BEAM
1 : 24

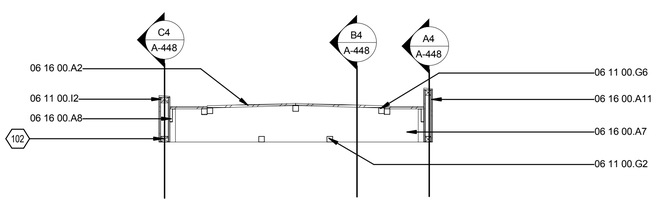

B1 ROOF TYPE 2 TRANSVERSE SECTION
1 : 24

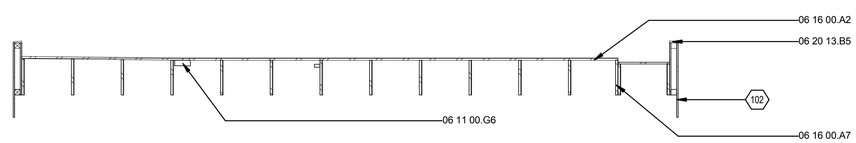

B4 ROOF TYPE 2 LONGITUDINAL SECTION
1 : 24

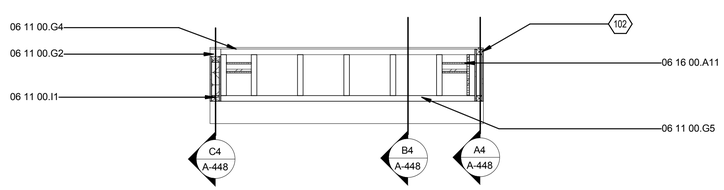

A1 ROOF TYPE 2 TRANSVERSE SECTION END BOX BEAM
1 : 24

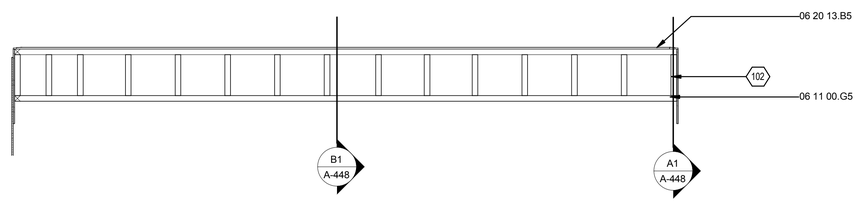

A4 ROOF TYPE 2 LONGITUDINAL SECTION BOX BEAM
1 : 24

GENERAL SHEET NOTES

REFERENCE KEYNOTES

06 11 00.G2	45X45MM BLOCKING TIMBER
06 11 00.G4	45X45MM TIMBER PLYWOOD BOX BEAM TOP CHORD
06 11 00.G5	45X45MM TIMBER PLYWOOD BOX BEAM BOTTOM CHORD
06 11 00.G6	45X45MM CONTINUOUS TIMBER
06 11 00.I1	63X45MM LVL PLYWOOD BOX BEAM TOP CHORD
06 11 00.I2	63X45MM LVL PLYWOOD BOX BEAM BOTTOM CHORD
06 16 00.A2	18MM PLYWOOD
06 16 00.A7	21MM PLYWOOD RIBS AT 400M CENTRES. CNC CUT TO FALLS.
06 16 00.A8	21MM PLYWOOD BLOCKING
06 16 00.A11	12MM PLYWOOD LINING, TREATED AND PAINTED
06 20 13.B5	TIMBER PARAPET FURRING TO ACHIEVE PARAPET FALL

SHEET KEYNOTES

102	12MM OUTER PLYWOOD WEB OF ALL BOXBEAMS TO BE SUPPLIED LOOSE FOR CONSTRUCTION PHASE TWO

FIRST LIGHT NZ

TEAM NAME:	FIRST LIGHT
ADDRESS:	139 VIVIAN STREET TE ARO, WELLINGTON NEWZEALAND
CONTACT:	ELINUTTALL@GMAIL.COM WWW.FIRSTLIGHTHOUSE.AC.NZ

CONSULTANTS

TENNENT + BROWN ARCHITECTS
DUNNING THORNTON CONSULTANTS LTD
LEAP AUSTRALASIA LTD
SOUTHERN PERSPECTIVES / SOLAR CITY

CLIENT

U.S. DEPARTMENT OF ENERGY
SOLAR DECATHLON 2011
WWW.SOLARDECATHLON.GOV

U.S. DEPARTMENT OF ENERGY SOLAR DECATHLON

MARK	DATE	DESCRIPTION
CN	11-01-11	FOR CONSTRUCTION

LOT NUMBER:	LOT NUMBER
DRAWN BY:	Author
CHECKED BY:	Checker
COPYRIGHT:	

SHEET TITLE

ROOF TYPE 2 - CONSTRUCTION DRAWINGS

A-448

8/13/2011 8:23:37 AM

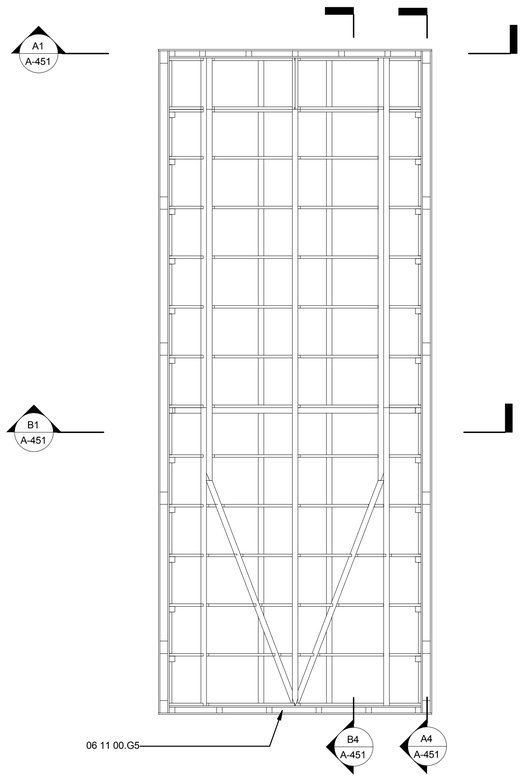

C1 ROOF TYPE 3 FRAMING PLAN
1 : 24

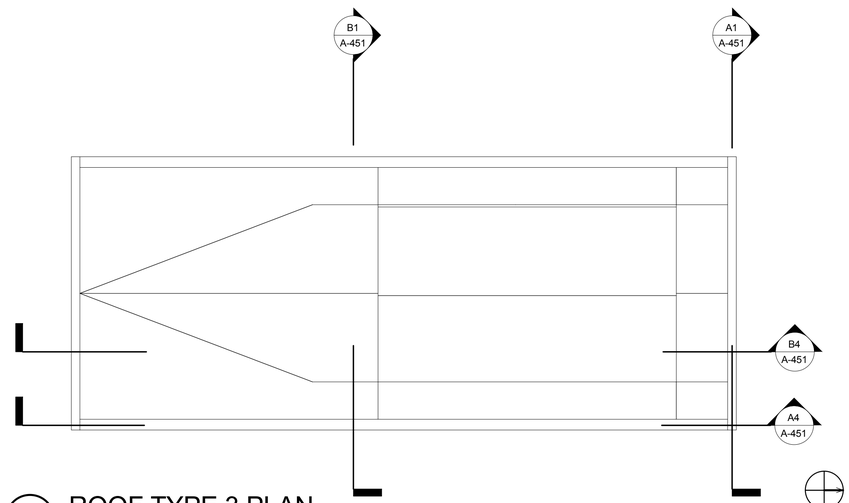

C4 ROOF TYPE 3 PLAN
1 : 24

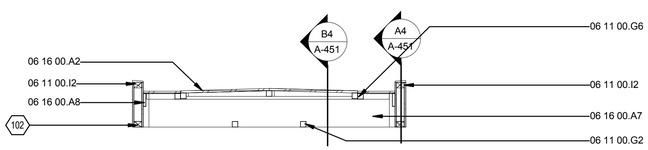

B1 ROOF TYPE 3 TRANSVERSE SECTION
1 : 24

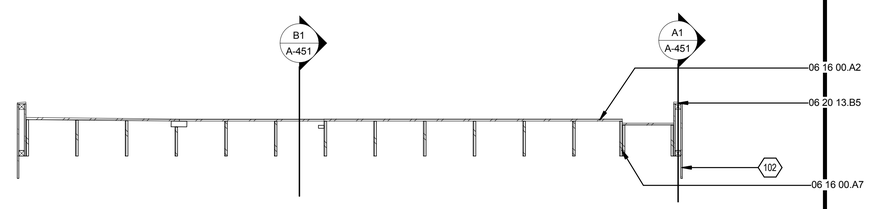

B4 ROOF TYPE 3 LONGITUDINAL SECTION
1 : 24

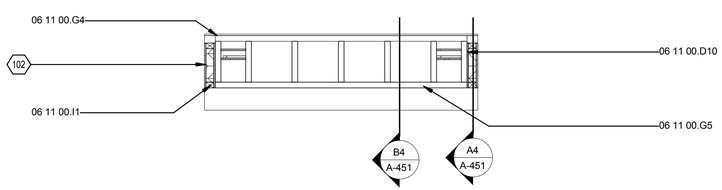

A1 ROOF TYPE 3 TRANSVERSE SECTION END BOX BEAM
1 : 24

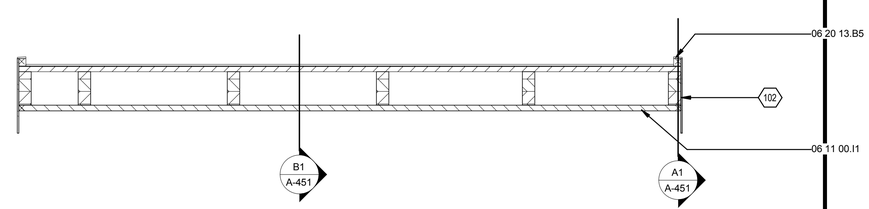

A4 ROOF TYPE 3 LONGITUDINAL SECTION LVL BOX BEAM
1 : 24

GENERAL SHEET NOTES

REFERENCE KEYNOTES

06 11 00.D10	360X87MM PLYWOOD BOXBEAM: 63X45MM LVL TOP AND BOTTOM CHORDS. 63X100MM LVL STIFFENERS @ 1200MM CENTRES. 12MM PLYWOOD WEBS.
06 11 00.G2	45X45MM BLOCKING TIMBER
06 11 00.G4	45X45MM TIMBER PLYWOOD BOX BEAM TOP CHORD
06 11 00.G5	45X45MM TIMBER PLYWOOD BOX BEAM BOTTOM CHORD
06 11 00.G6	45X45MM CONTINUOUS TIMBER
06 11 00.I1	63X45MM LVL PLYWOOD BOX BEAM TOP CHORD
06 11 00.I2	63X45MM LVL PLYWOOD BOX BEAM BOTTOM CHORD
06 16 00.A2	18MM PLYWOOD
06 16 00.A7	21MM PLYWOOD RIBS AT 400M CENTRES. CNC CUT TO FALLS.
06 16 00.A8	21MM PLYWOOD BLOCKING
06 20 13.B5	TIMBER PARAPET FURRING TO ACHIEVE PARAPET FALL

SHEET KEYNOTES

102	12MM OUTER PLYWOOD WEB OF ALL BOXBEAMS TO BE SUPPLIED LOOSE FOR CONSTRUCTION PHASE TWO

FIRST LIGHT NZ

TEAM NAME:	FIRST LIGHT
ADDRESS:	139 VIVIAN STREET TE ARO, WELLINGTON NEWZEALAND
CONTACT:	ELINUTTALL@GMAIL.COM WWW.FIRSTLIGHTHOUSE.AC.NZ

CONSULTANTS

TENNENT + BROWN ARCHITECTS
DUNNING THORNTON CONSULTANTS LTD
LEAP AUSTRALASIA LTD
SOUTHERN PERSPECTIVES / SOLAR CITY

CLIENT

U.S. DEPARTMENT OF ENERGY
SOLAR DECATHLON 2011
WWW.SOLARDECATHLON.GOV

U.S. DEPARTMENT OF ENERGY SOLAR DECATHLON

MARK	DATE	DESCRIPTION
CN	11-01-11	FOR CONSTRUCTION

LOT NUMBER:	LOT NUMBER
DRAWN BY:	Author
CHECKED BY:	Checker
COPYRIGHT:	

SHEET TITLE

ROOF TYPE 3 - CONSTRUCTION DRAWINGS

A-451

8/13/2011 8:23:43 AM

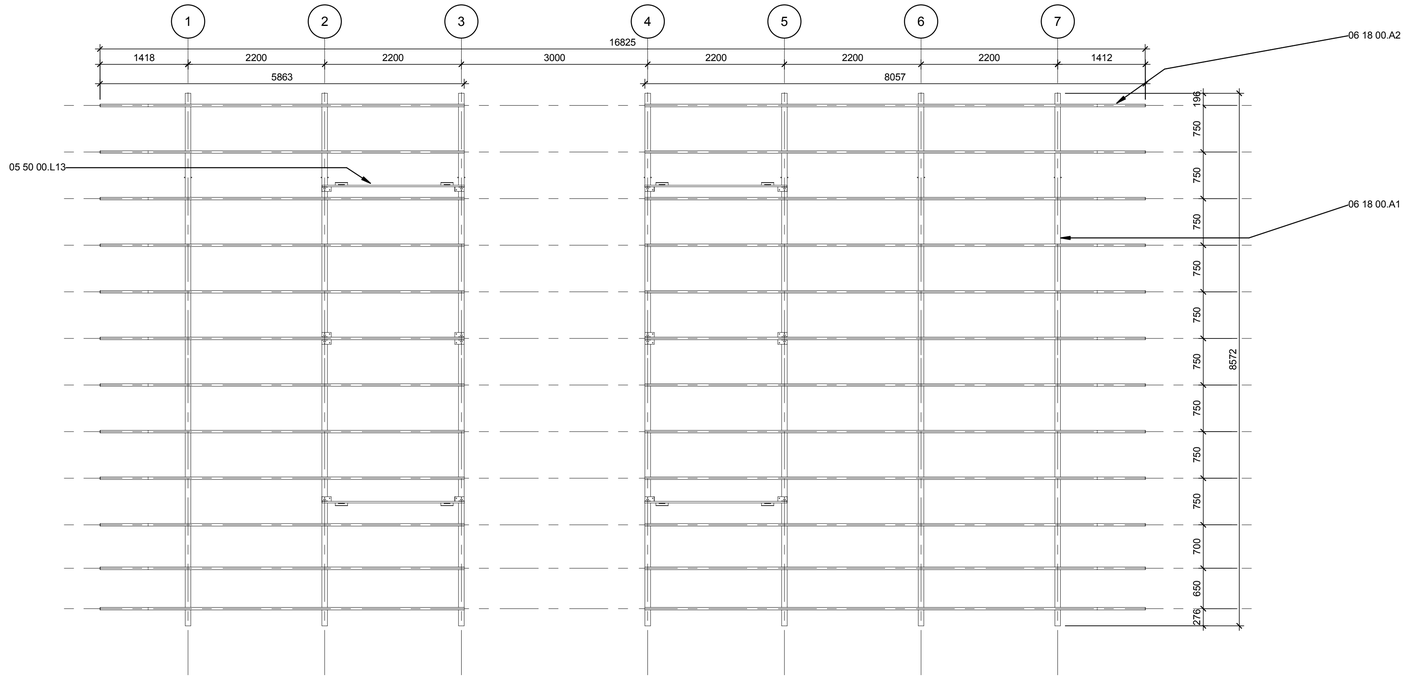

C1 CANOPY STRUCTURAL PLAN

1 : 48

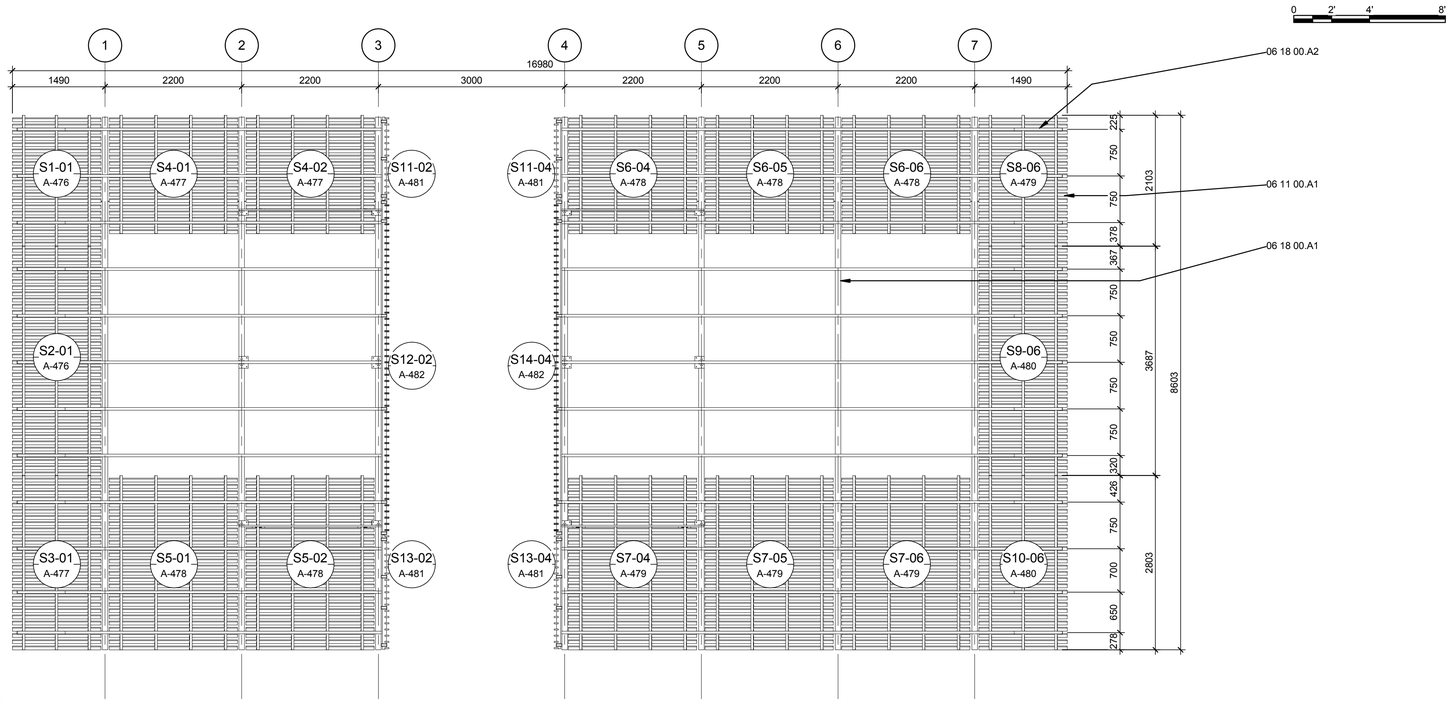

A1 CANOPY PLAN

1 : 48

GENERAL SHEET NOTES

REFERENCE KEYNOTES

05 50 00.L13	STRUCTURAL STEEL SUPPORT BRACKETS
06 11 00.A1	75X19MM CEDAR SLATS AT 100MM CENTRES FIXED TO 65X35MM BATTENS. CONSTRUCTED IN PANELISED SYSTEM FOR ONSITE ASSEMBLY.
06 18 00.A1	318X90MM GLUE-LAMINATED TIMBER BEAM SPANNING BETWEEN COLUMNS, TAPERING TO 135X90 @ CANTILEVERED ENDS. REFER FABRICATION DRAWINGS.
06 18 00.A2	135X42MM GLULAM GL8 RAFTERS AT 750MM NOM. CENTRES SPANNIG FULL LENGTH OF CANOPY, TAPERING TO 70X42MM @ CANTILEVERED END. REFER FABRICATION DRAWINGS.

SHEET KEYNOTES

FIRST LIGHT NZ

TEAM NAME:	FIRST LIGHT
ADDRESS:	139 VIVIAN STREET TE ARO, WELLINGTON NEWZEALAND
CONTACT:	ELINUTTALL@GMAIL.COM WWW.FIRSTLIGHTHOUSE.AC.NZ

CONSULTANTS

TENNENT + BROWN ARCHITECTS

DUNNING THORNTON CONSULTANTS LTD

LEAP AUSTRALASIA LTD

SOUTHERN PERSPECTIVES / SOLAR CITY

CLIENT

U.S. DEPARTMENT OF ENERGY

SOLAR DECATHLON 2011

WWW.SOLARDECATHLON.GOV

U.S. DEPARTMENT OF ENERGY SOLAR DECATHLON

MARK	DATE	DESCRIPTION
CN	11-01-11	FOR CONSTRUCTION

LOT NUMBER:	LOT NUMBER
DRAWN BY:	Author
CHECKED BY:	Checker
COPYRIGHT:	

SHEET TITLE

CANOPY PLAN

A-461

8/13/2011 8:23:48 AM

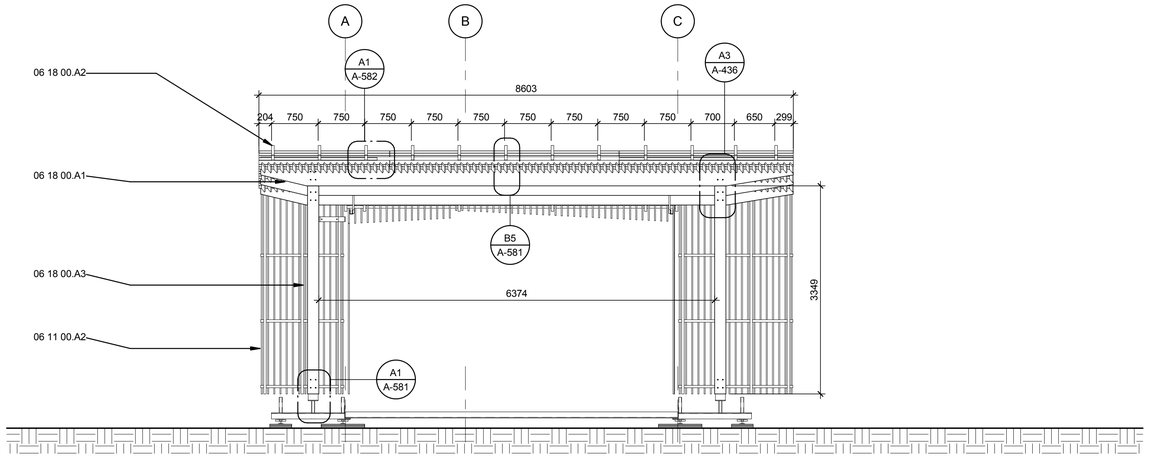

D1 CANOPY WEST ELEVATION

1 : 48

0 2' 4' 8'

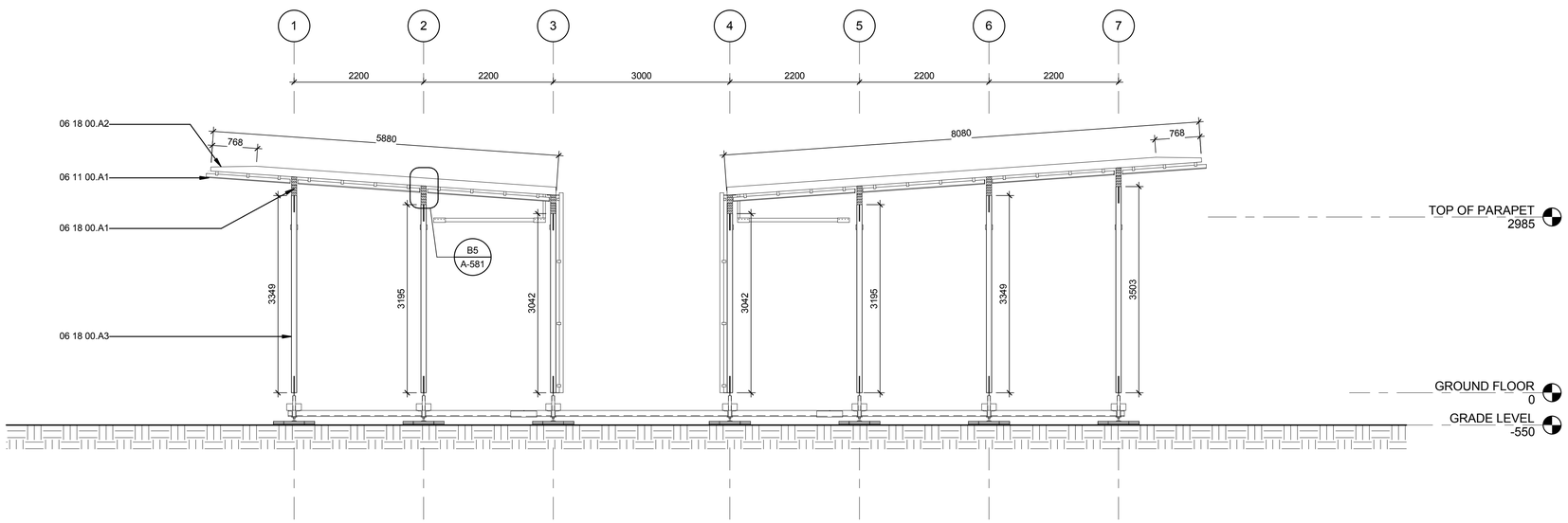

A1 CANOPY SOUTH ELEVATION

1 : 48

8/13/2011 8:23:54 AM

GENERAL SHEET NOTES

REFERENCE KEYNOTES

06 11 00.A1	75X19MM CEDAR SLATS AT 100MM CENTRES FIXED TO 65X35MM BATTENS. CONSTRUCTED IN PANELISED SYSTEM FOR ONSITE ASSEMBLY.
06 11 00.A2	90 X 45MM TIMBER SUPPORT STUD
06 18 00.A1	318X90MM GLUE-LAMINATED TIMBER BEAM SPANNING BETWEEN COLUMNS, TAPERING TO 135X90 @ CANTILEVERED ENDS. REFER FABRICATION DRAWINGS.
06 18 00.A2	135X42MM GLULAM GL8 RAFTERS AT 750MM NOM. CENTRES SPANNIG FULL LENGTH OF CANOPY, TAPERING TO 70X42MM @ CANTILEVERED END. REFER FABRICATION DRAWINGS.
06 18 00.A3	90X180MM GLULAM GL10 COLUMN. REFER FABRICATION DRAWINGS.

SHEET KEYNOTES

FIRST LIGHT NZ

TEAM NAME: FIRST LIGHT

ADDRESS: 139 VIVIAN STREET
TE ARO, WELLINGTON
NEWZEALAND

CONTACT: ELINUTTALL@GMAIL.COM
WWW.FIRSTLIGHTHOUSE.AC.NZ

CONSULTANTS

TENNENT + BROWN ARCHITECTS

DUNNING THORNTON CONSULTANTS LTD

LEAP AUSTRALASIA LTD

SOUTHERN PERSPECTIVES / SOLAR CITY

CLIENT

U.S. DEPARTMENT OF ENERGY

SOLAR DECATHLON 2011

WWW.SOLARDECATHLON.GOV

U.S. DEPARTMENT OF ENERGY SOLAR DECATHLON

MARK	DATE	DESCRIPTION
CN	11-01-11	FOR CONSTRUCTION

LOT NUMBER: LOT NUMBER

DRAWN BY: Author

CHECKED BY: Checker

COPYRIGHT:

SHEET TITLE

CANOPY ELEVATIONS

A-462

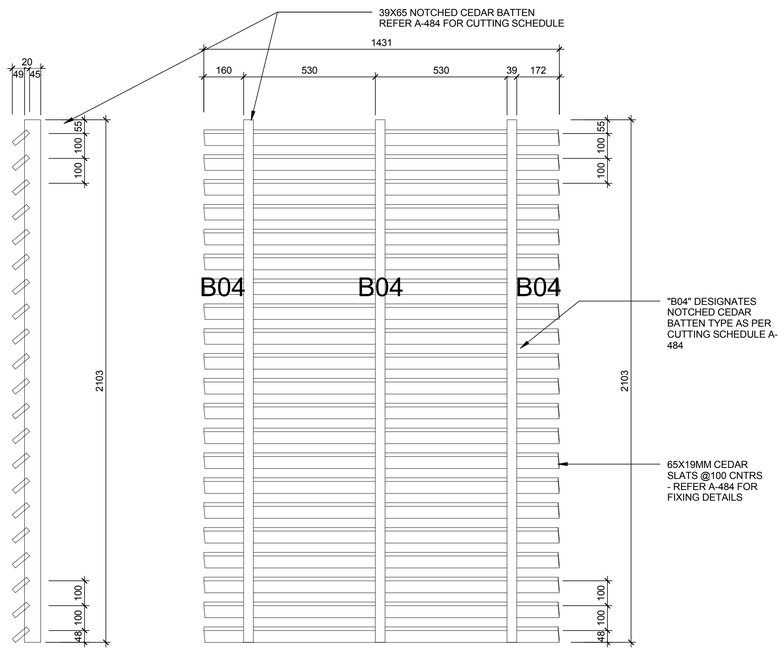

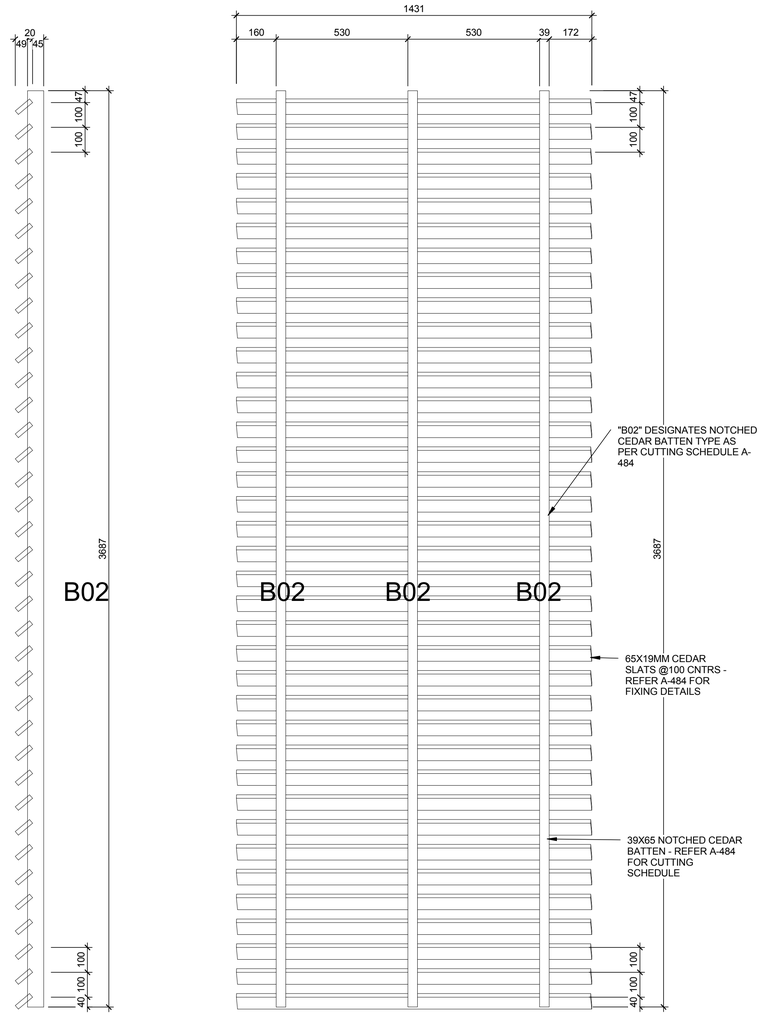

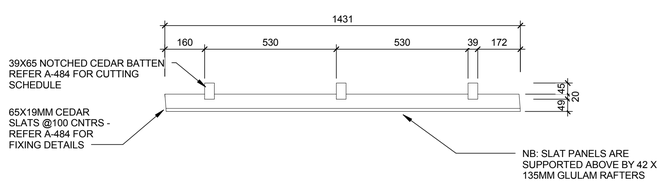

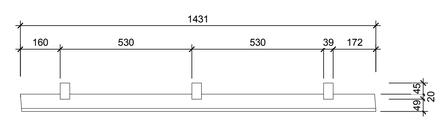

A1 S1 MODULE

0 1/2' 1' 2'

A4 S2 MODULE

0 1/2' 1' 2'

GENERAL SHEET NOTES

REFERENCE KEYNOTES

SHEET KEYNOTES

FIRST LIGHT NZ

TEAM NAME:	FIRST LIGHT
ADDRESS:	139 VIVIAN STREET TE ARO, WELLINGTON NEWZEALAND
CONTACT:	ELINUTTALL@GMAIL.COM WWW.FIRSTLIGHTHOUSE.AC.NZ

CONSULTANTS

TENNENT + BROWN ARCHITECTS
DUNNING THORNTON CONSULTANTS LTD
LEAP AUSTRALASIA LTD
SOUTHERN PERSPECTIVES / SOLAR CITY

CLIENT

U.S. DEPARTMENT OF ENERGY
SOLAR DECATHLON 2011
WWW.SOLARDECATHLON.GOV

U.S. DEPARTMENT OF ENERGY SOLAR DECATHLON

MARK	DATE	DESCRIPTION
CN	11-01-11	FOR CONSTRUCTION

LOT NUMBER:	LOT NUMBER
DRAWN BY:	Author
CHECKED BY:	Checker
COPYRIGHT:	

SHEET TITLE

CANOPY MODULES
S1 & S2

A-474

8/13/2011 8:24:00 AM

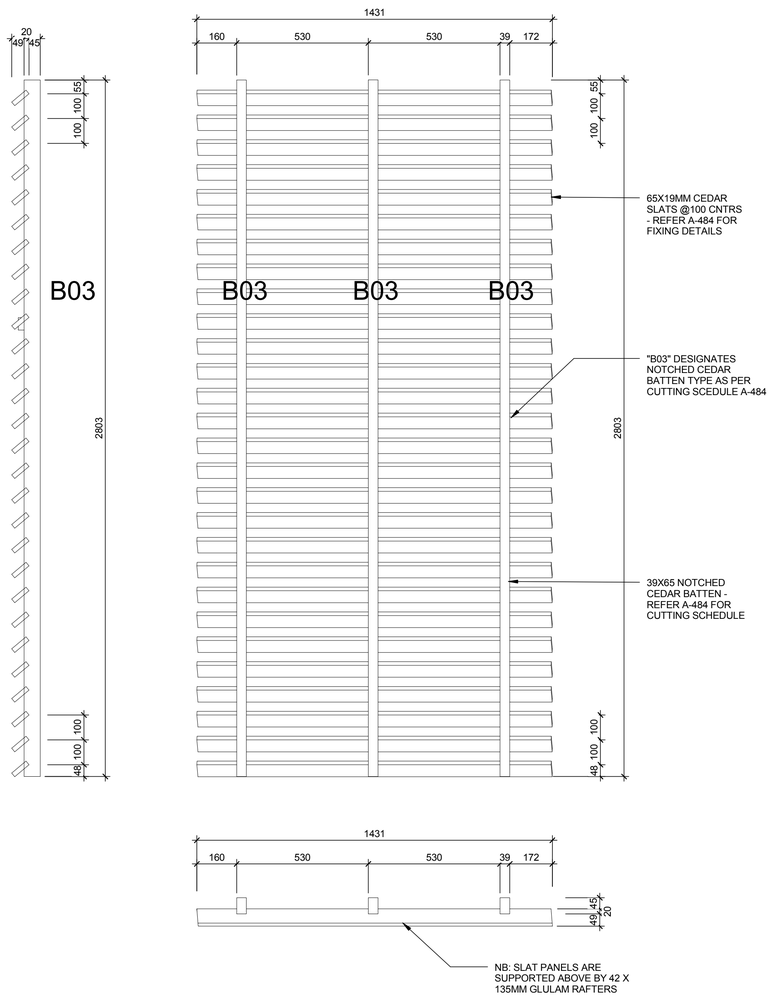

A1 S3 MODULE

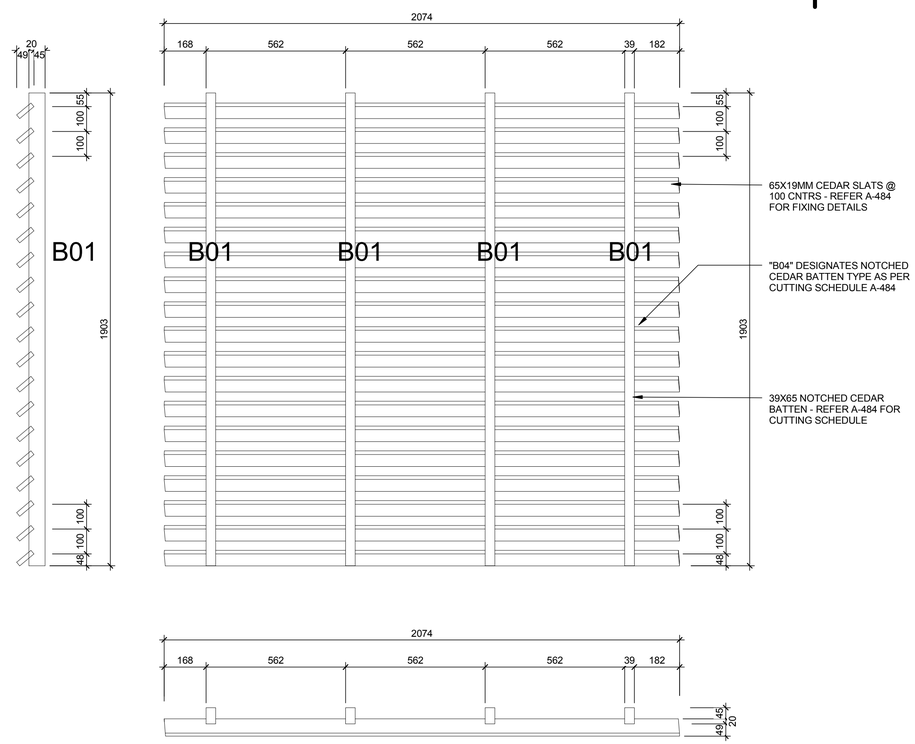

A4 S4 MODULE

0 1/2' 1' 2'

GENERAL SHEET NOTES

REFERENCE KEYNOTES

SHEET KEYNOTES

FIRST LIGHT NZ

TEAM NAME:	FIRST LIGHT
ADDRESS:	139 VIVIAN STREET TE ARO, WELLINGTON NEWZEALAND
CONTACT:	ELINUTTALL@GMAIL.COM WWW.FIRSTLIGHTHOUSE.AC.NZ

CONSULTANTS

TENNENT + BROWN ARCHITECTS
DUNNING THORNTON CONSULTANTS LTD
LEAP AUSTRALASIA LTD
SOUTHERN PERSPECTIVES / SOLAR CITY

CLIENT

U.S. DEPARTMENT OF ENERGY
SOLAR DECATHLON 2011
WWW.SOLARDECATHLON.GOV

U.S. DEPARTMENT OF ENERGY SOLAR DECATHLON

MARK	DATE	DESCRIPTION
CN	11-01-11	FOR CONSTRUCTION

LOT NUMBER:	LOT NUMBER
DRAWN BY:	Author
CHECKED BY:	Checker
COPYRIGHT:	

SHEET TITLE

CANOPY MODULES
S3 & S4

A-475

8/13/2011 8:24:06 AM

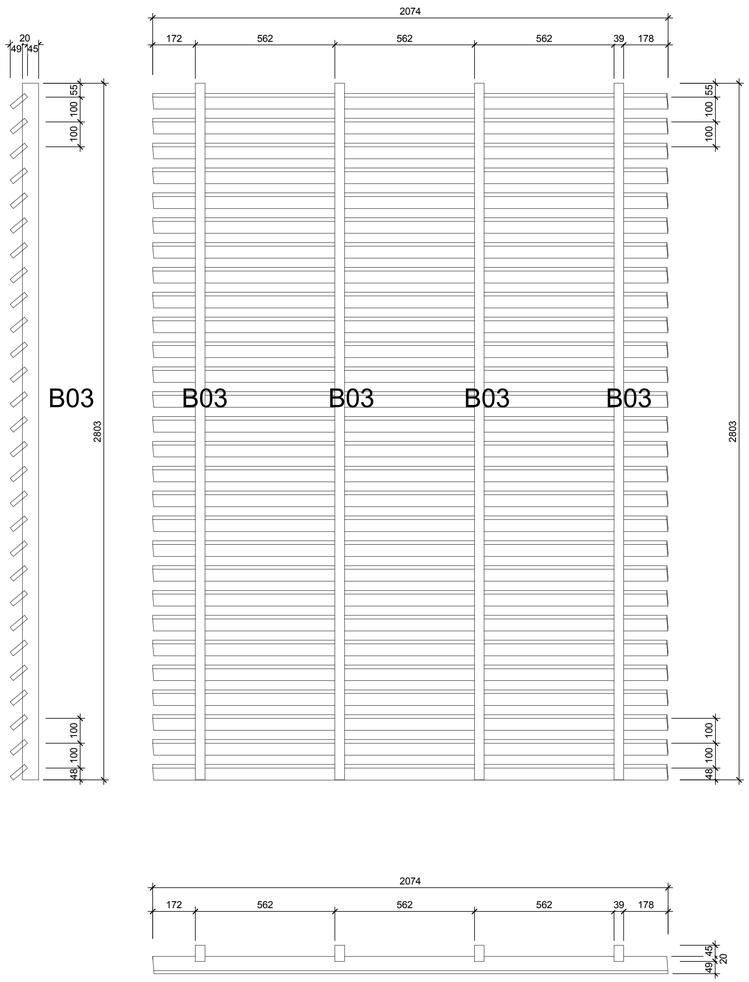

A1 S5 MODULE

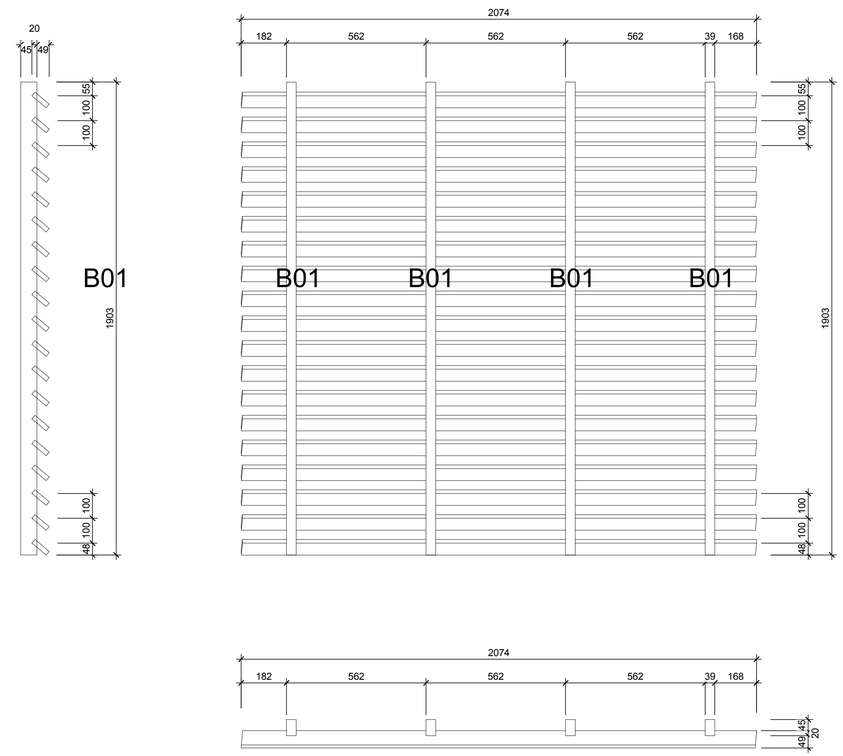

A4 S6 MODULE

GENERAL SHEET NOTES

REFERENCE KEYNOTES

SHEET KEYNOTES

FIRST LIGHT NZ

TEAM NAME:	FIRST LIGHT
ADDRESS:	139 VIVIAN STREET TE ARO, WELLINGTON NEWZEALAND
CONTACT:	ELINUTTALL@GMAIL.COM WWW.FIRSTLIGHTHOUSE.AC.NZ

CONSULTANTS

TENNENT + BROWN ARCHITECTS
DUNNING THORNTON CONSULTANTS LTD
LEAP AUSTRALASIA LTD
SOUTHERN PERSPECTIVES / SOLAR CITY

CLIENT

U.S. DEPARTMENT OF ENERGY
SOLAR DECATHLON 2011
WWW.SOLARDECATHLON.GOV

U.S. DEPARTMENT OF ENERGY SOLAR DECATHLON

MARK	DATE	DESCRIPTION
CN	11-01-11	FOR CONSTRUCTION

LOT NUMBER:	LOT NUMBER
DRAWN BY:	Author
CHECKED BY:	Checker
COPYRIGHT:	

SHEET TITLE

CANOPY MODULES
S5 & S6

A-476

8/13/2011 8:24:12 AM

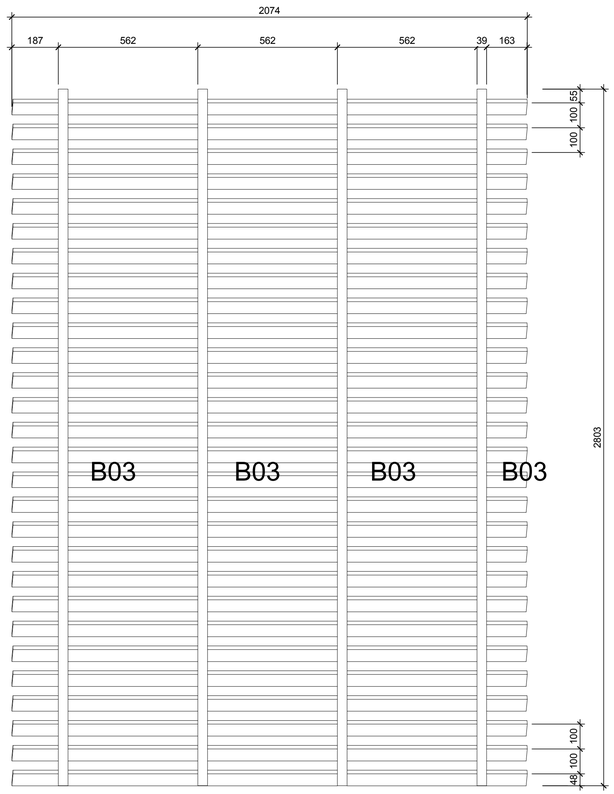

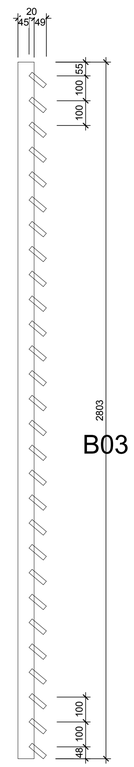

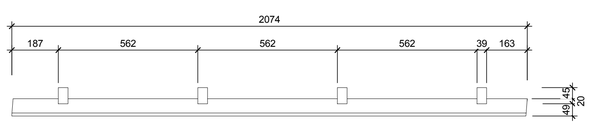

A1 S7 MODULE

0 1/2' 1' 2'

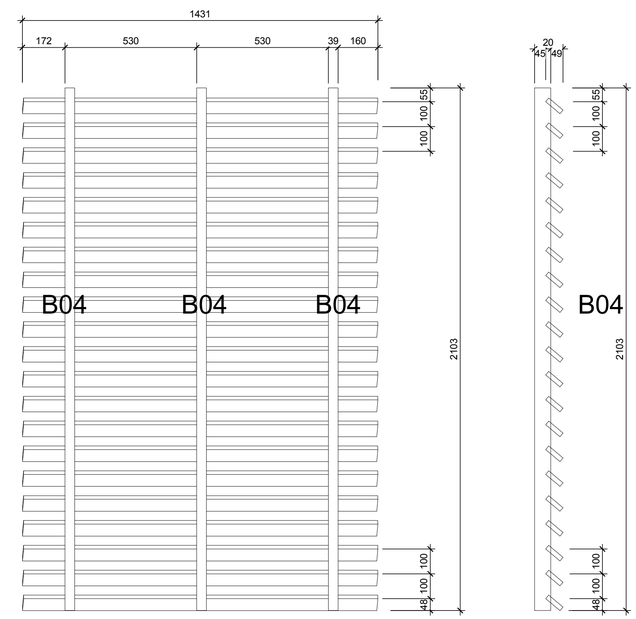

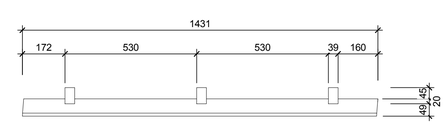

A4 S8 MODULE

0 1/2' 1' 2'

GENERAL SHEET NOTES

REFERENCE KEYNOTES

SHEET KEYNOTES

FIRST LIGHT NZ

TEAM NAME:	FIRST LIGHT
ADDRESS:	139 VIVIAN STREET TE ARO, WELLINGTON NEWZEALAND
CONTACT:	ELINUTTALL@GMAIL.COM WWW.FIRSTLIGHTHOUSE.AC.NZ

CONSULTANTS

TENNENT + BROWN ARCHITECTS
DUNNING THORNTON CONSULTANTS LTD
LEAP AUSTRALASIA LTD
SOUTHERN PERSPECTIVES / SOLAR CITY

CLIENT

U.S. DEPARTMENT OF ENERGY
SOLAR DECATHLON 2011
WWW.SOLARDECATHLON.GOV

U.S. DEPARTMENT OF ENERGY SOLAR DECATHLON

MARK	DATE	DESCRIPTION
CN	11-01-11	FOR CONSTRUCTION

LOT NUMBER:	LOT NUMBER
DRAWN BY:	Author
CHECKED BY:	Checker
COPYRIGHT:	

SHEET TITLE

CANOPY MODULES
S7 & S8

A-477

8/13/2011 8:24:18 AM

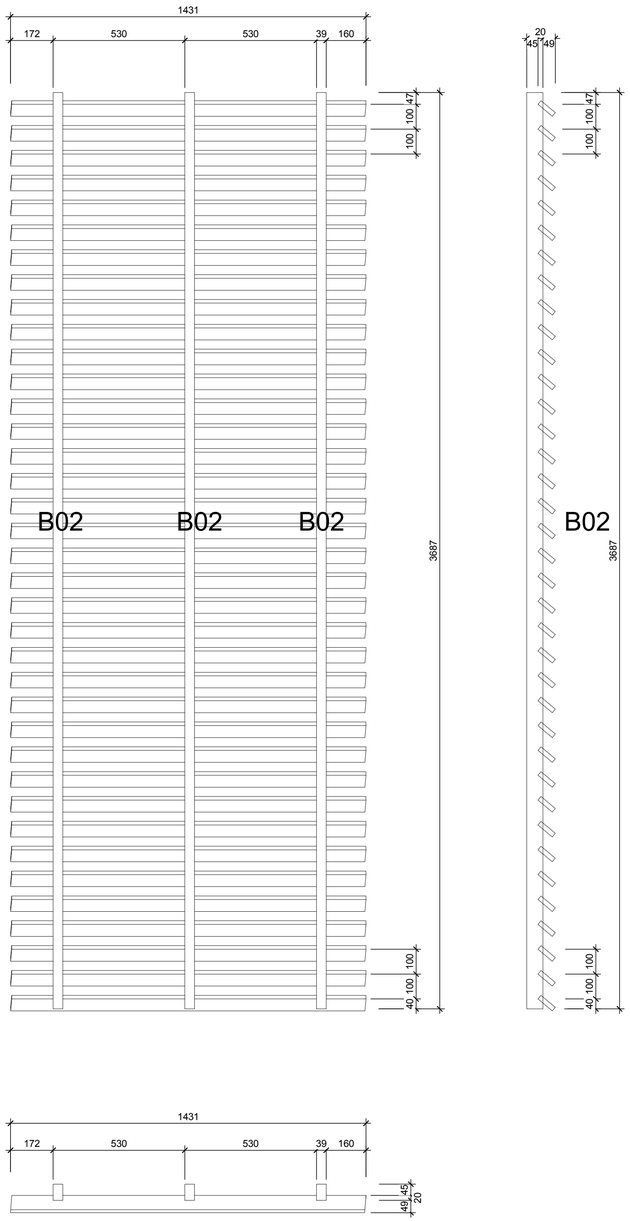

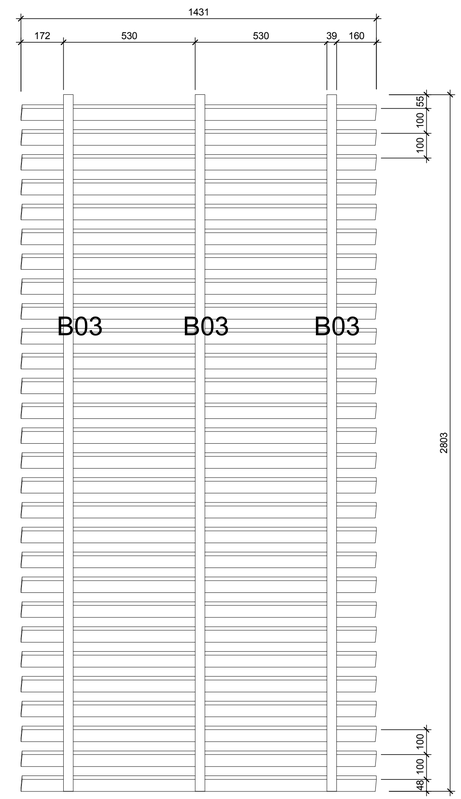

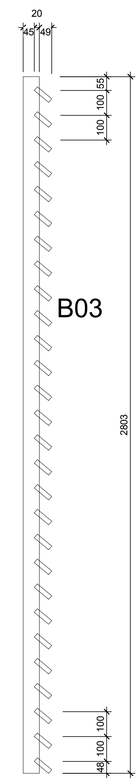

A1 S9 MODULE

0 1/2' 1' 2'

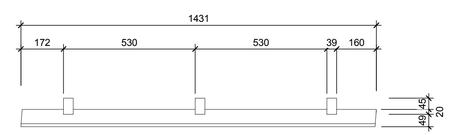

A4 S10 MODULE

0 1/2' 1' 2'

GENERAL SHEET NOTES

REFERENCE KEYNOTES

SHEET KEYNOTES

FIRST LIGHT NZ

TEAM NAME:	FIRST LIGHT
ADDRESS:	139 VIVIAN STREET TE ARO, WELLINGTON NEWZEALAND
CONTACT:	ELINUTTALL@GMAIL.COM WWW.FIRSTLIGHTHOUSE.AC.NZ

CONSULTANTS

TENNENT + BROWN ARCHITECTS
DUNNING THORNTON CONSULTANTS LTD
LEAP AUSTRALASIA LTD
SOUTHERN PERSPECTIVES / SOLAR CITY

CLIENT

U.S. DEPARTMENT OF ENERGY
SOLAR DECATHLON 2011
WWW.SOLARDECATHLON.GOV

U.S. DEPARTMENT OF ENERGY SOLAR DECATHLON

MARK	DATE	DESCRIPTION
CN	11-01-11	FOR CONSTRUCTION

LOT NUMBER:	LOT NUMBER
DRAWN BY:	Author
CHECKED BY:	Checker
COPYRIGHT:	

SHEET TITLE

CANOPY MODULES
S9 & S10

A-478

8/13/2011 8:24:24 AM

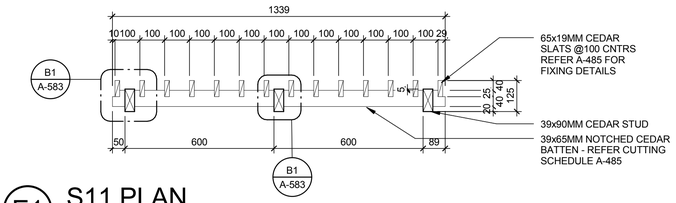

E1 S11 PLAN
1 : 12

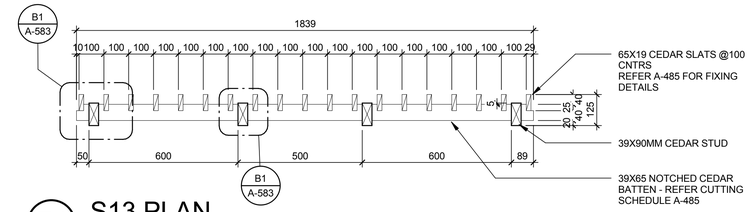

E4 S13 PLAN
1 : 12

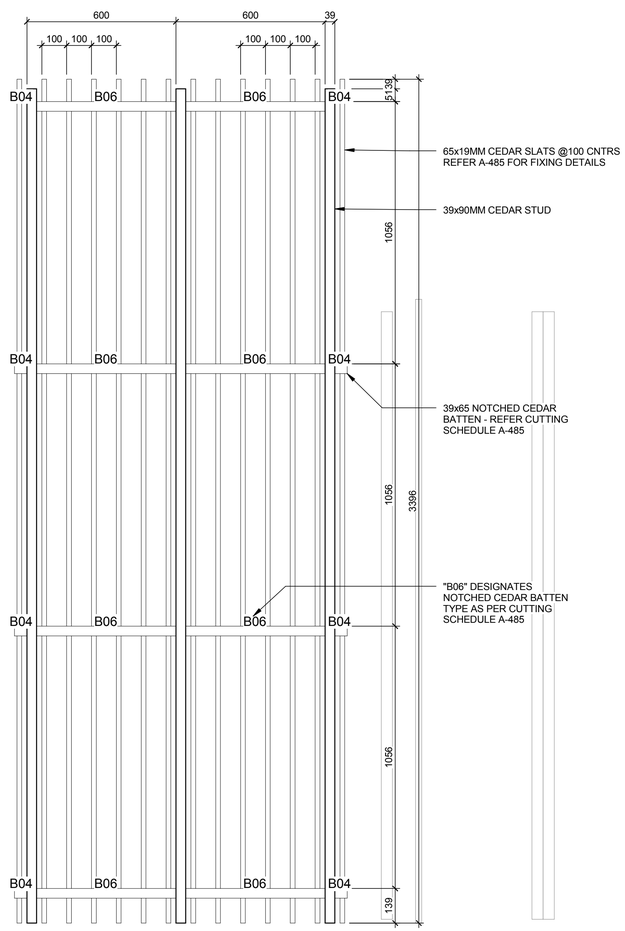

A1 S11 ELEVATION
1 : 12

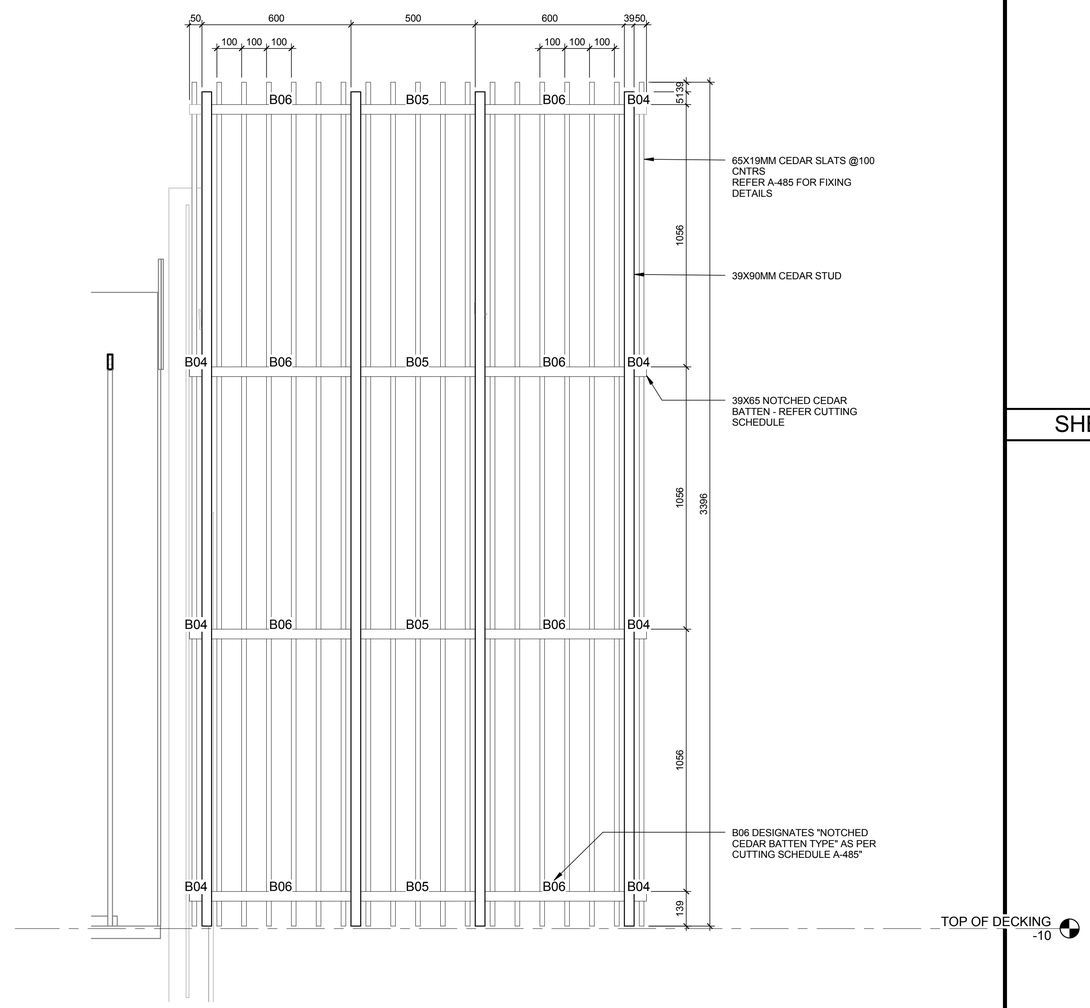

A4 S13 ELEVATION
1 : 12

0 1/2' 1' 2'

GENERAL SHEET NOTES

REFERENCE KEYNOTES

SHEET KEYNOTES

FIRST LIGHT NZ

TEAM NAME:	FIRST LIGHT
ADDRESS:	139 VIVIAN STREET TE ARO, WELLINGTON NEWZEALAND
CONTACT:	ELINUTTALL@GMAIL.COM WWW.FIRSTLIGHTHOUSE.AC.NZ

CONSULTANTS

TENNENT + BROWN ARCHITECTS
DUNNING THORNTON CONSULTANTS LTD
LEAP AUSTRALASIA LTD
SOUTHERN PERSPECTIVES / SOLAR CITY

CLIENT

U.S. DEPARTMENT OF ENERGY
SOLAR DECATHLON 2011
WWW.SOLARDECATHLON.GOV

U.S. DEPARTMENT OF ENERGY SOLAR DECATHLON

MARK	DATE	DESCRIPTION
CN	11-01-11	FOR CONSTRUCTION

LOT NUMBER:	LOT NUMBER
DRAWN BY:	Author
CHECKED BY:	Checker
COPYRIGHT:	

SHEET TITLE

CANOPY MODULES
S11 & S13

A-479

8/13/2011 8:24:30 AM

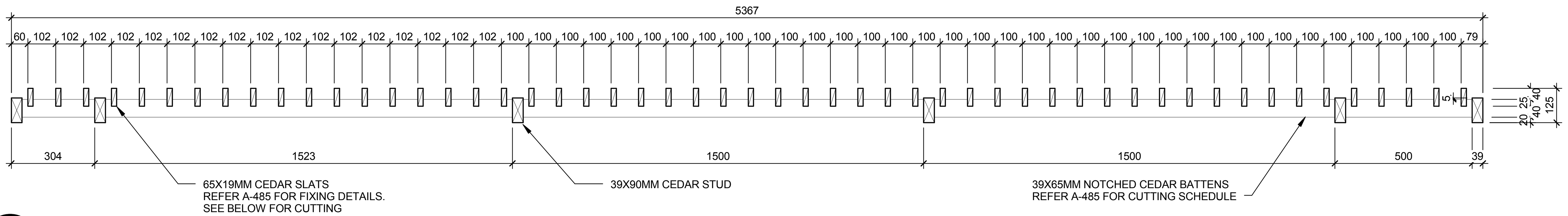

E1 S12 PLAN
1 : 12

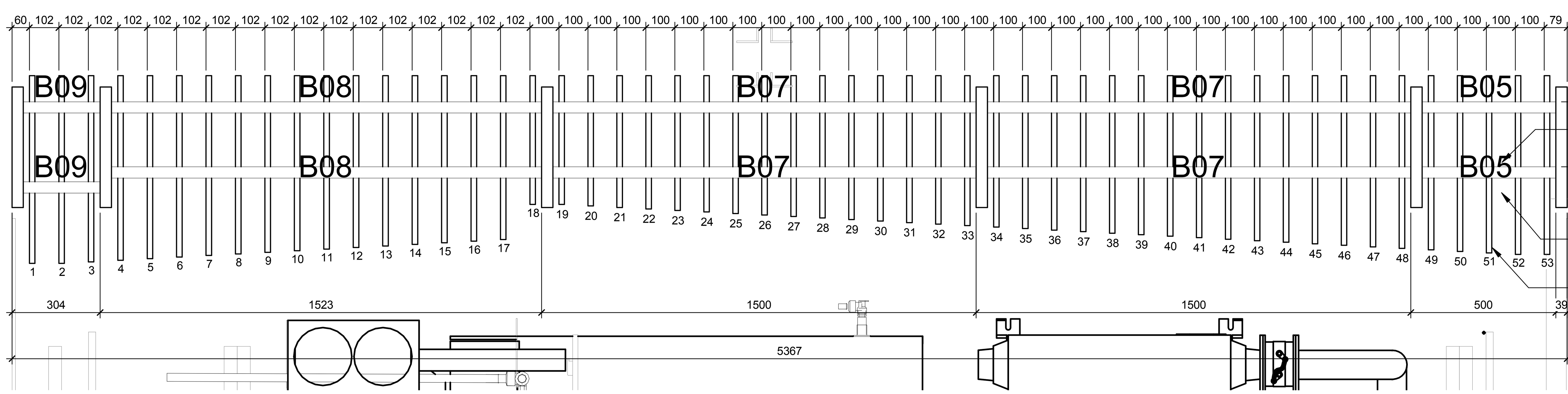

C1 S12 ELEVATION
1 : 12

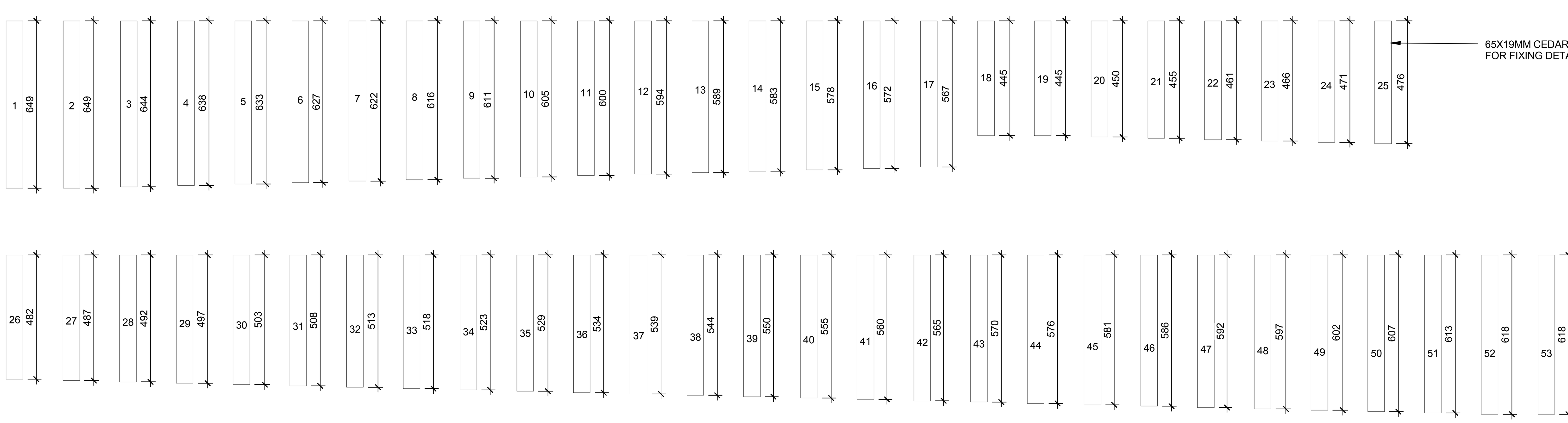

A1 SLAT CUTTING SCHEDULE S12 & S14
1 : 12

0 1/2' 1' 2'

8/13/2011 8:24:35 AM

GENERAL SHEET NOTES

REFERENCE KEYNOTES

SHEET KEYNOTES

FIRST LIGHT NZ

TEAM NAME:	FIRST LIGHT
ADDRESS:	139 VIVIAN STREET TE ARO, WELLINGTON NEWZEALAND
CONTACT:	ELINUTTALL@GMAIL.COM WWW.FIRSTLIGHTHOUSE.AC.NZ

CONSULTANTS

TENNENT + BROWN ARCHITECTS
DUNNING THORNTON CONSULTANTS LTD
LEAP AUSTRALASIA LTD
SOUTHERN PERSPECTIVES / SOLAR CITY

CLIENT

U.S. DEPARTMENT OF ENERGY
SOLAR DECATHLON 2011
WWW.SOLARDECATHLON.GOV

U.S. DEPARTMENT OF ENERGY SOLAR DECATHLON

MARK	DATE	DESCRIPTION
CN	11-01-11	FOR CONSTRUCTION

LOT NUMBER:	LOT NUMBER
DRAWN BY:	Author
CHECKED BY:	Checker
COPYRIGHT:	

SHEET TITLE

CANOPY MODULES S12 & S14

A-480

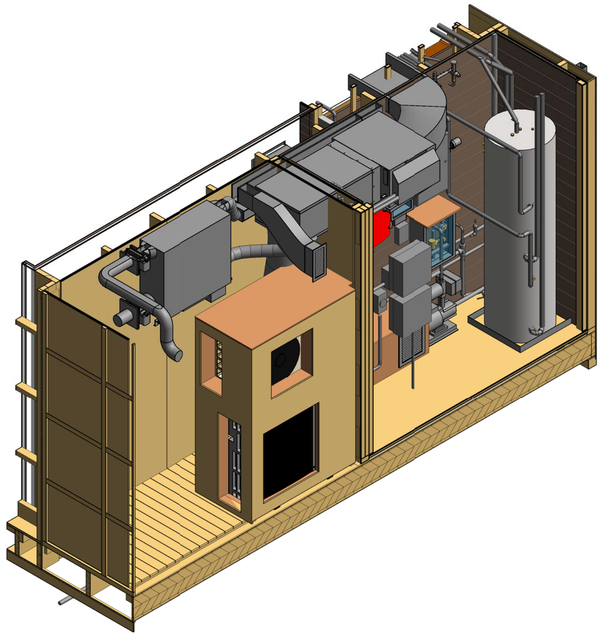

A1 SERVICES SHED ISOMETRIC

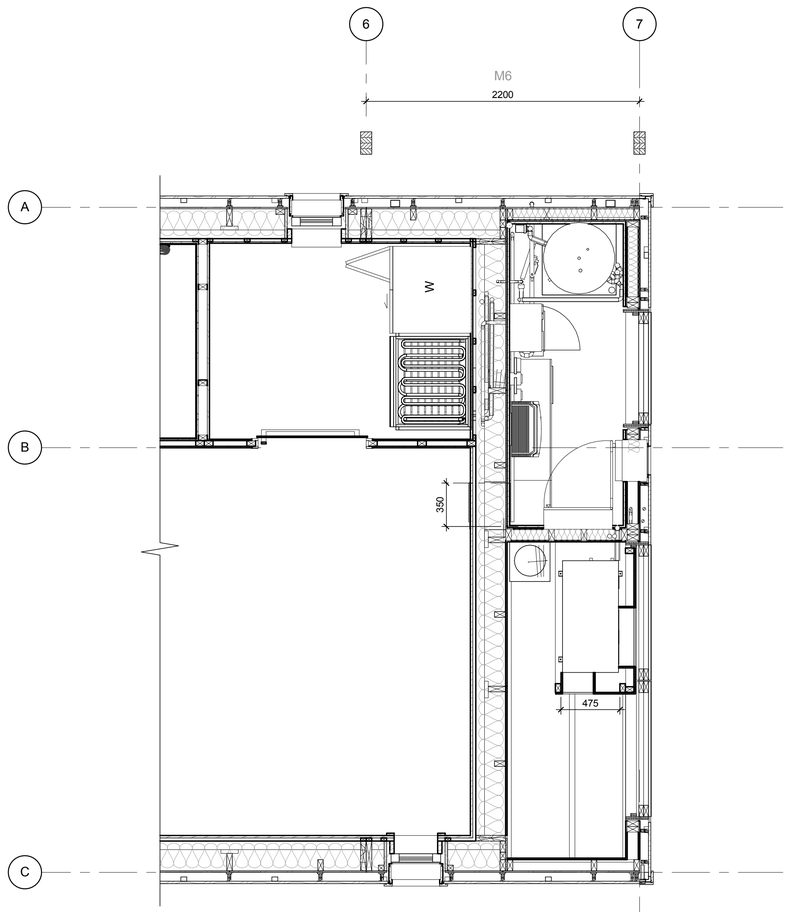

A4 SERVICES SHED
1 : 24

0 1' 2' 4'

GENERAL SHEET NOTES

1.
MECHANICAL EQUIPMENT SHOWN INDICATIVELY ONLY. REFER MECHANICAL, PLUMBING, ELECTRICAL, TELECOMMUNICATIONS AND FIRE PROTECTION DRAWING SETS FOR DETAIL.

REFERENCE KEYNOTES

SHEET KEYNOTES

FIRST LIGHT NZ

TEAM NAME:	FIRSTLIGHT NZ
ADDRESS:	139 VIVIAN STREET TE ARO, WELLINGTON NEWZEALAND
CONTACT:	INFO@FIRSTLIGHTHOUSE.AC.NZ WWW.FIRSTLIGHTHOUSE.AC.NZ

CONSULTANTS

TENNENT + BROWN ARCHITECTS
DUNNING THORNTON CONSULTANTS LTD
LEAP AUSTRALASIA LTD
SOUTHERN PERSPECTIVES / SOLAR CITY

CLIENT
U.S. DEPARTMENT OF ENERGY
SOLAR DECATHLON 2011
WWW.SOLARDECATHLON.GOV

U.S. DEPARTMENT OF ENERGY SOLAR DECATHLON

MARK	DATE	DESCRIPTION
CN	11-01-11	FOR CONSTRUCTION

LOT NUMBER:	LOT NUMBER
DRAWN BY:	Author
CHECKED BY:	Checker
COPYRIGHT:	VICTORIA UNIVERSITY

SHEET TITLE
SERVICES SHED PLANS

A-490

8/13/2011 8:24:49 AM

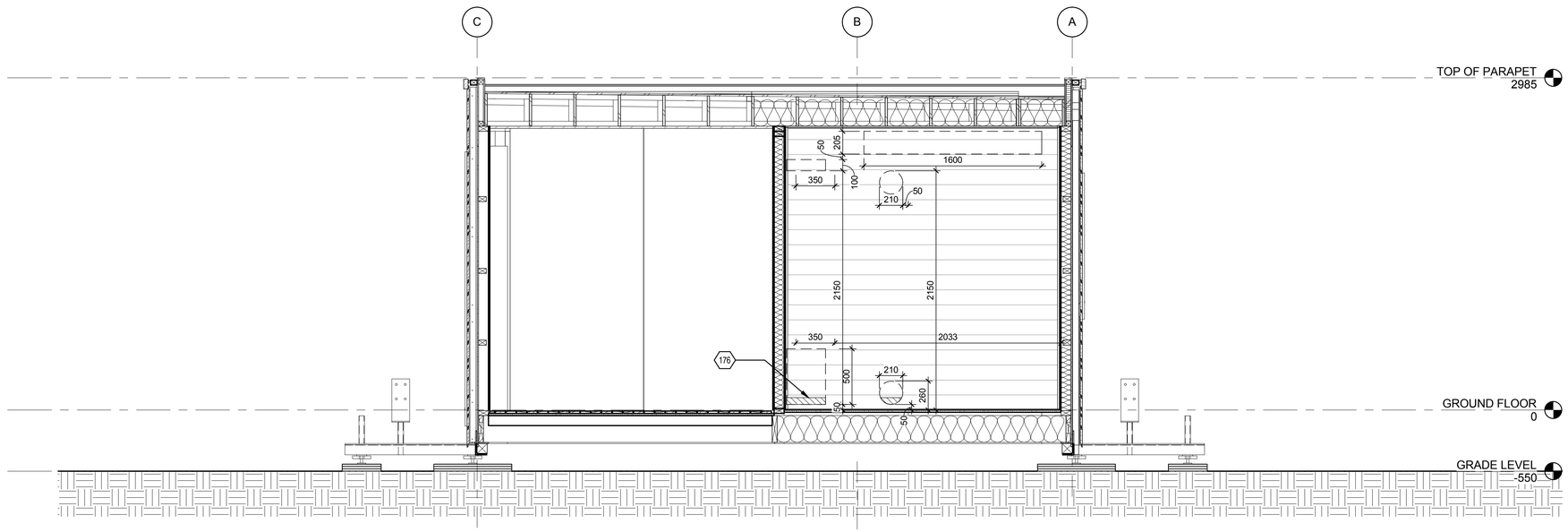

C3 SERVICE SHED WALL PENETRATIONS

1 : 24

0 1' 2' 4'

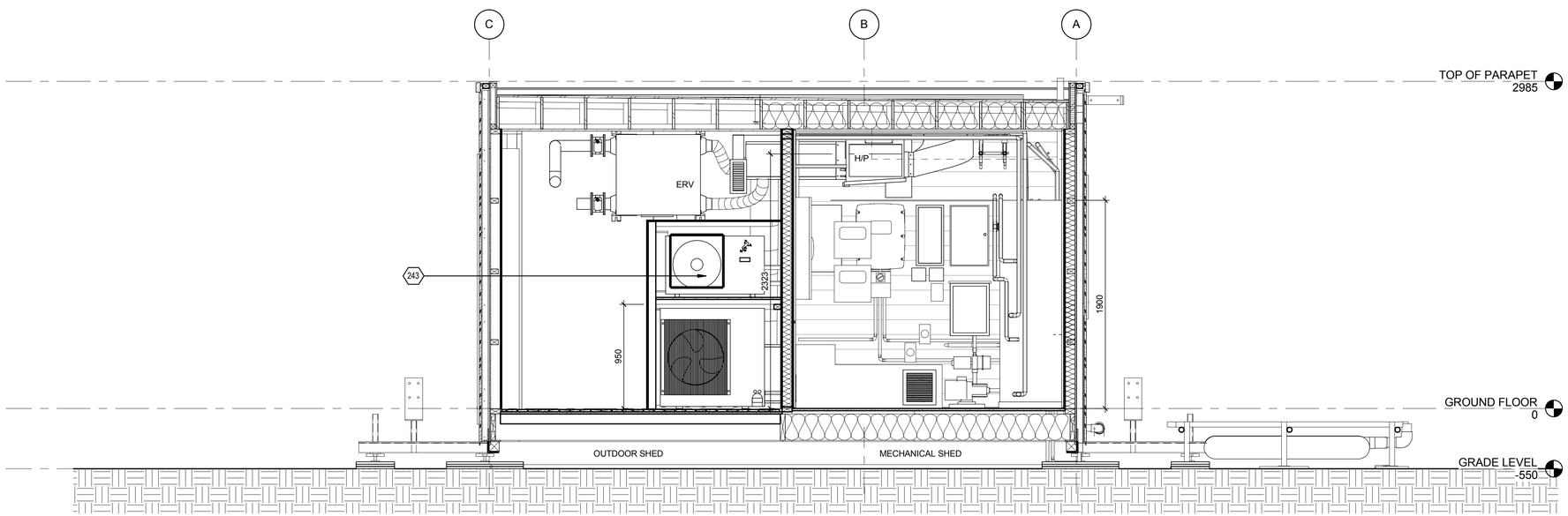

A1 SERVICE SHED ELEVATION

1 : 24

0 1' 2' 4'

GENERAL SHEET NOTES

1.
MECHANICAL EQUIPMENT SHOWN INDICATIVELY ONLY. REFER MECHANICAL, PLUMBING, ELECTRICAL, TELECOMMUNICATIONS AND FIRE PROTECTION DRAWING SETS FOR DETAIL.
2.
LANDSCAPE AND CANOPY NOT SHEWN FOR CLARITY

REFERENCE KEYNOTES

SHEET KEYNOTES

176	HATCHED AREA INDICATES PENETRATION THROUGH HORIZONTAL STUD ON INSIDE FACE OF WALL TO ALLOW FOR RETURN AIR GRILL
243	SERVICES ITEMS SHOWN INDICATIVE ONLY - REFER TO RELEVANT DISCIPLINE SETS FOR DETAILS

FIRST LIGHT NZ

TEAM NAME:	FIRSTLIGHT NZ
ADDRESS:	139 VIVIAN STREET TE ARO, WELLINGTON NEWZEALAND
CONTACT:	INFO@FIRSTLIGHTHOUSE.AC.NZ WWW.FIRSTLIGHTHOUSE.AC.NZ

CONSULTANTS

TENNENT + BROWN ARCHITECTS
DUNNING THORNTON CONSULTANTS LTD
LEAP AUSTRALASIA LTD
SOUTHERN PERSPECTIVES / SOLAR CITY

CLIENT

U.S. DEPARTMENT OF ENERGY
SOLAR DECATHLON 2011
WWW.SOLARDECATHLON.GOV

U.S. DEPARTMENT OF ENERGY SOLAR DECATHLON

MARK	DATE	DESCRIPTION
CN	11-01-11	FOR CONSTRUCTION

LOT NUMBER:	LOT NUMBER
DRAWN BY:	Author
CHECKED BY:	Checker
COPYRIGHT:	VICTORIA UNIVERSITY

SHEET TITLE

SERVICE SHED ELEVATIONS

A-491

8/13/2011 8:24:57 AM

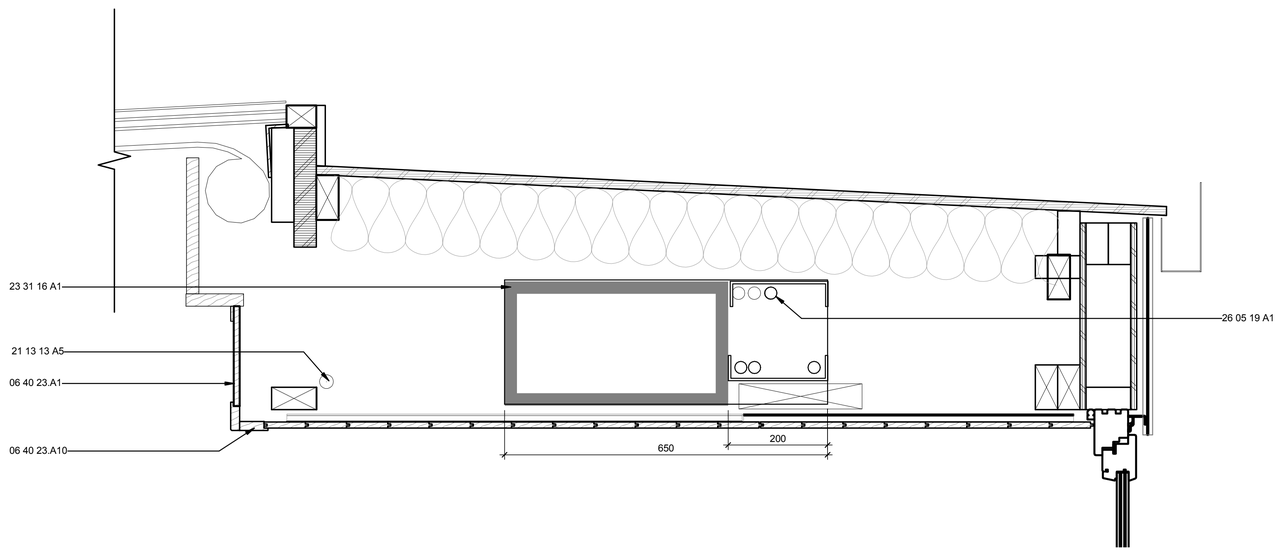

C1 BULKHEAD SECTION - MODULE 3
1 : 6

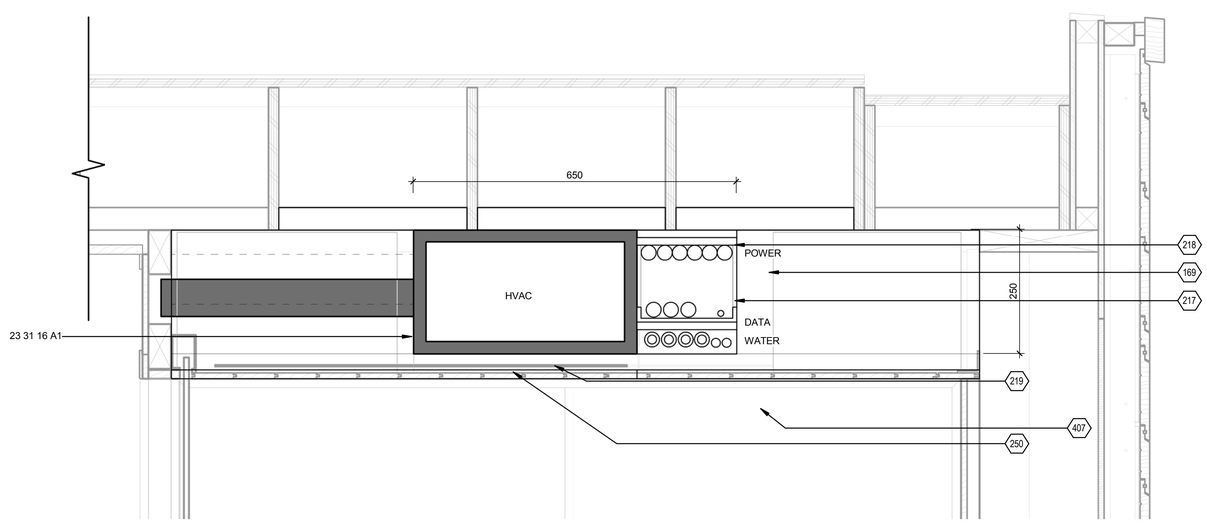

A1 SECTION OF BULKHEAD THROUGH SHEAR WALL
1 : 6

GENERAL SHEET NOTES

REFERENCE KEYNOTES

06 40 23.A1	83X12MM HORIZONTAL TONGUE & GROOVE RIMU TIMBER BOARD INTERIOR LINNING.
06 40 23.A10	EX 57X18MM INTERIOR TIMBER TRIM TO OPENINGS
21 13 13 A5	28MM HEP20 POLYBUTYLENE MAIN BRANCH PIPING IN BULKHEAD
23 31 16 A1	PREMIER FOAMBOARD DUCTING
26 05 19 A1	25 CORE, 2.5MM2 (AWG 14) OFLEX CLASSIC 130H MULTICORE CABLE

SHEET KEYNOTES

169	600X280MM OPENING IN TRANSVERSE SHEAR WALLS FOR DUCTING
216	DATA CABLES BUNDLED TOGETHER RUNNING TO EACH MODULE
217	200MM BASKET TRAYS HUNG FROM CEILING WITH SUSPENSION BRACKET
218	200MM UNISTRUT HUNG FROM ROOF STRUCTURE
219	ORGANISER SUPPLIED DATA CABLE
250	WATER PIPES HUNG FROM BASKET TRAY IN SERVICES BULKHEAD. ALL WATER LINES TO RUN THROUGH 650 X 250 OPENINGS BETWEEN SHEAR WALLS
407	REMOVEABLE RIMU T&G CEILING PANELS TO ALL CEILINGS THROUGH BUILDING CORE - REFER INTERIOR DRAWING SET FOR DETAILS AND SETOUT

FIRST LIGHT NZ

TEAM NAME:	FIRST LIGHT
ADDRESS:	139 VIVIAN STREET TE ARO, WELLINGTON NEWZEALAND
CONTACT:	ELINUTTALL@GMAIL.COM WWW.FIRSTLIGHTHOUSE.AC.NZ

CONSULTANTS

TENNENT + BROWN ARCHITECTS
DUNNING THORNTON CONSULTANTS LTD
LEAP AUSTRALASIA LTD
SOUTHERN PERSPECTIVES / SOLAR CITY

CLIENT

U.S. DEPARTMENT OF ENERGY
SOLAR DECATHLON 2011
WWW.SOLARDECATHLON.GOV

U.S. DEPARTMENT OF ENERGY SOLAR DECATHLON

MARK	DATE	DESCRIPTION
CN	11-01-11	FOR CONSTRUCTION

LOT NUMBER:	LOT NUMBER
DRAWN BY:	Author
CHECKED BY:	Checker

COPYRIGHT:

SHEET TITLE

BULKHEAD SECTION

A-493

8/13/2011 8:25:08 AM

M1

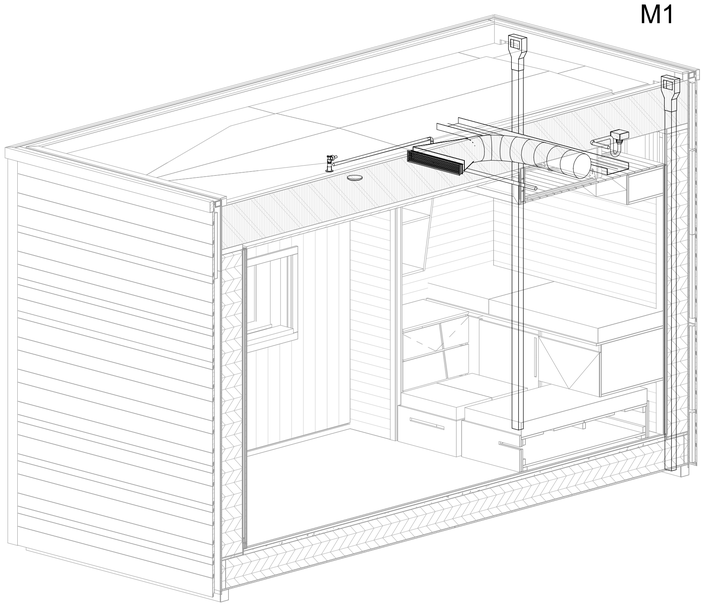

M2

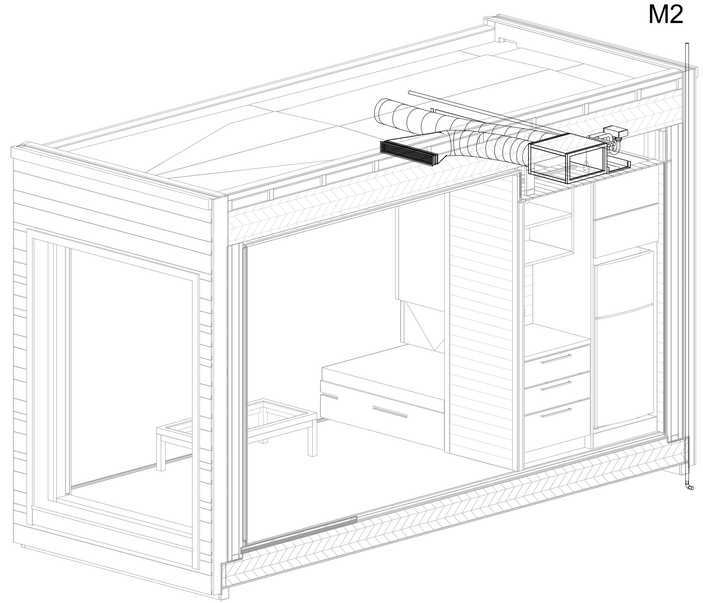

A1 MODULES 1 & 2 SERVICES CONNECTIONS

8/13/2011 8:25:14 AM

GENERAL SHEET NOTES

REFERENCE KEYNOTES

SHEET KEYNOTES

FIRST LIGHT NZ

TEAM NAME:	FIRSTLIGHT NZ
ADDRESS:	139 VIVIAN STREET TE ARO, WELLINGTON NEWZEALAND
CONTACT:	INFO@FIRSTLIGHTHOUSE.AC.NZ WWW.FIRSTLIGHTHOUSE.AC.NZ

CONSULTANTS

TENNENT + BROWN ARCHITECTS
DUNNING THORNTON CONSULTANTS LTD
LEAP AUSTRALASIA LTD
SOUTHERN PERSPECTIVES / SOLAR CITY

CLIENT

U.S. DEPARTMENT OF ENERGY
SOLAR DECATHLON 2011
WWW.SOLARDECATHLON.GOV

U.S. DEPARTMENT OF ENERGY SOLAR DECATHLON

MARK	DATE	DESCRIPTION
CN	11-01-11	FOR CONSTRUCTION

LOT NUMBER:	LOT NUMBER
DRAWN BY:	Author
CHECKED BY:	Checker
COPYRIGHT:	VICTORIA UNIVERSITY

SHEET TITLE

MODULES - SERVICES CONNECTIONS

A-494

M3

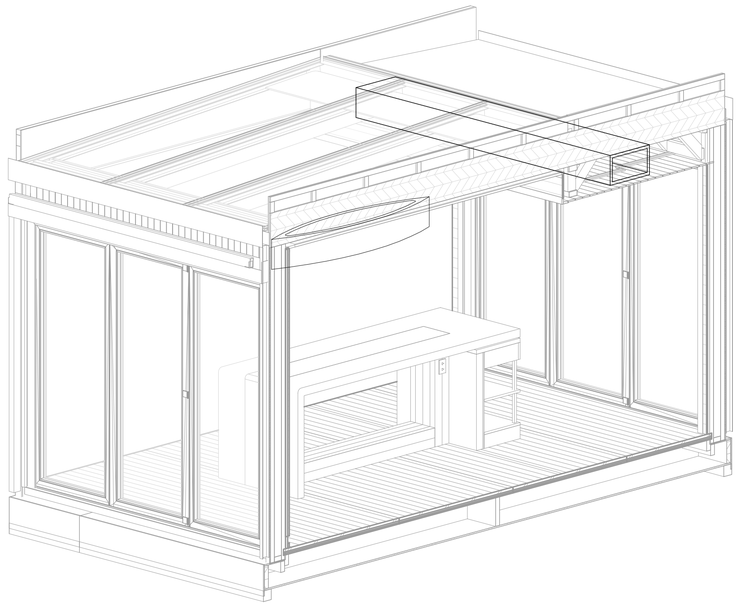

M4

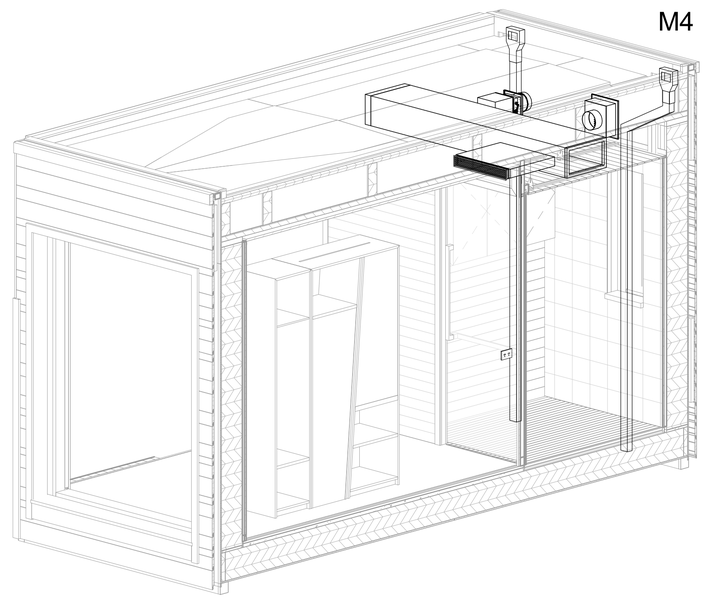

A1 MODULES 3 & 4 SERVICES CONNECTIONS

8/13/2011 8:25:22 AM

GENERAL SHEET NOTES

REFERENCE KEYNOTES

SHEET KEYNOTES

FIRST LIGHT NZ

TEAM NAME:	FIRSTLIGHT NZ
ADDRESS:	139 VIVIAN STREET TE ARO, WELLINGTON NEWZEALAND
CONTACT:	INFO@FIRSTLIGHTHOUSE.AC.NZ WWW.FIRSTLIGHTHOUSE.AC.NZ

CONSULTANTS

TENNENT + BROWN ARCHITECTS
DUNNING THORNTON CONSULTANTS LTD
LEAP AUSTRALASIA LTD
SOUTHERN PERSPECTIVES / SOLAR CITY

CLIENT

U.S. DEPARTMENT OF ENERGY
SOLAR DECATHLON 2011
WWW.SOLARDECATHLON.GOV

U.S. DEPARTMENT OF ENERGY SOLAR DECATHLON

MARK	DATE	DESCRIPTION
CN	11-01-11	FOR CONSTRUCTION

LOT NUMBER:	LOT NUMBER
DRAWN BY:	Author
CHECKED BY:	Checker
COPYRIGHT:	VICTORIA UNIVERSITY

SHEET TITLE

MODULES - SERVICES CONNECTIONS

A-495

M5

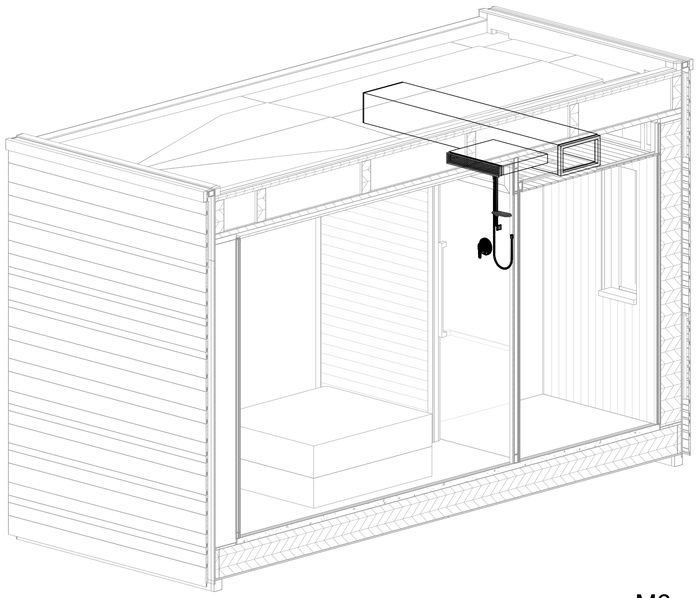

M6

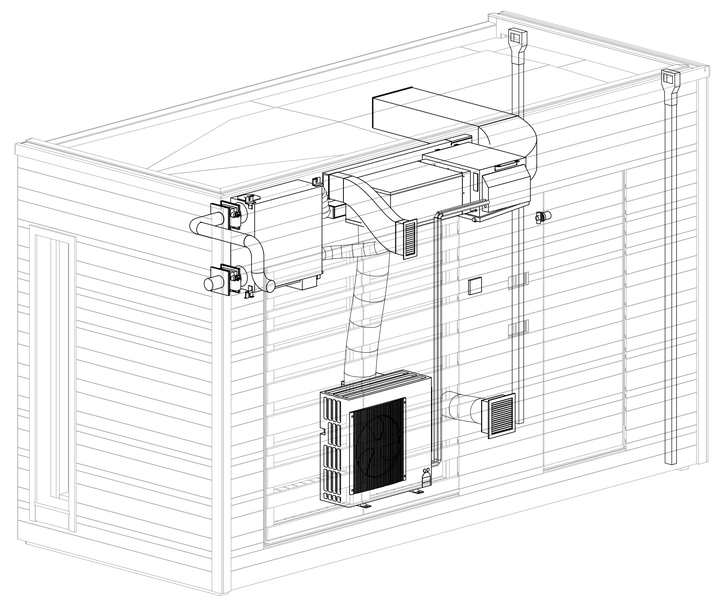

A1 MODULES 5 & 6 SERVICES CONNECTIONS

8/13/2011 8:25:30 AM

GENERAL SHEET NOTES

REFERENCE KEYNOTES

SHEET KEYNOTES

FIRST LIGHT NZ

TEAM NAME:	FIRSTLIGHT NZ
ADDRESS:	139 VIVIAN STREET TE ARO, WELLINGTON NEWZEALAND
CONTACT:	INFO@FIRSTLIGHTHOUSE.AC.NZ WWW.FIRSTLIGHTHOUSE.AC.NZ

CONSULTANTS

TENNENT + BROWN ARCHITECTS
DUNNING THORNTON CONSULTANTS LTD
LEAP AUSTRALASIA LTD
SOUTHERN PERSPECTIVES / SOLAR CITY

CLIENT

U.S. DEPARTMENT OF ENERGY
SOLAR DECATHLON 2011
WWW.SOLARDECATHLON.GOV

U.S. DEPARTMENT OF ENERGY SOLAR DECATHLON

MARK	DATE	DESCRIPTION
CN	11-01-11	FOR CONSTRUCTION

LOT NUMBER:	LOT NUMBER
DRAWN BY:	Author
CHECKED BY:	Checker
COPYRIGHT:	VICTORIA UNIVERSITY

SHEET TITLE

MODULES - SERVICES CONNECTIONS

A-496

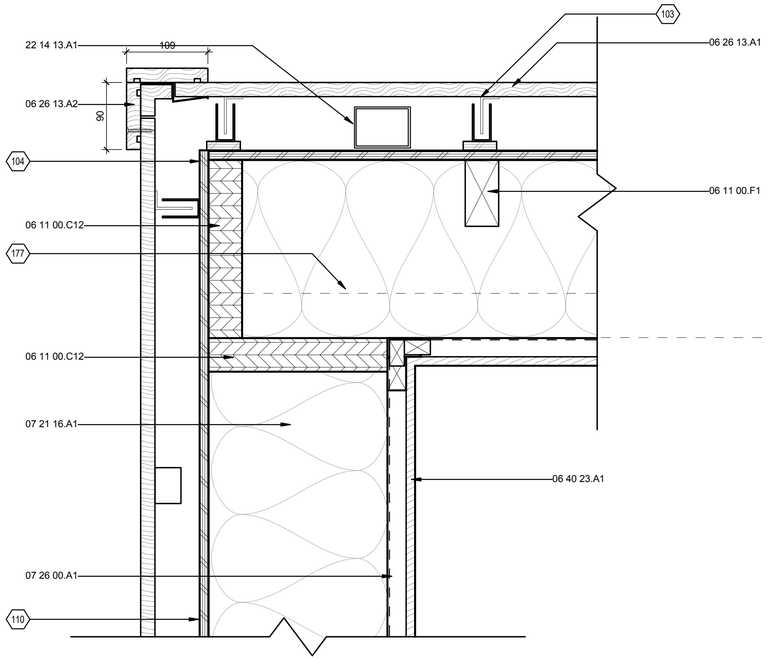

C1 MODULE CORNER PLAN
1 : 4

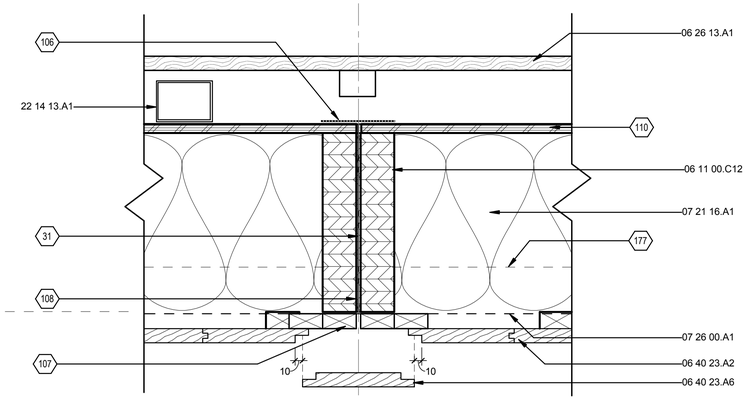

D4 TYPICAL MODULE WALL JOINT PLAN
1 : 4

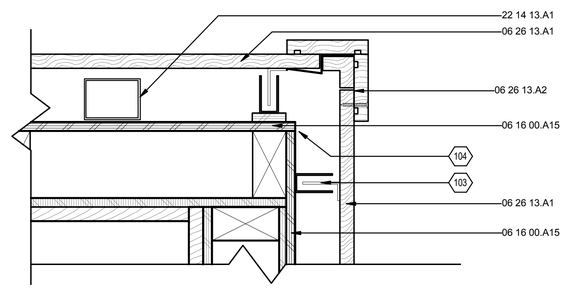

C4 SHED CORNER PLAN
1 : 4

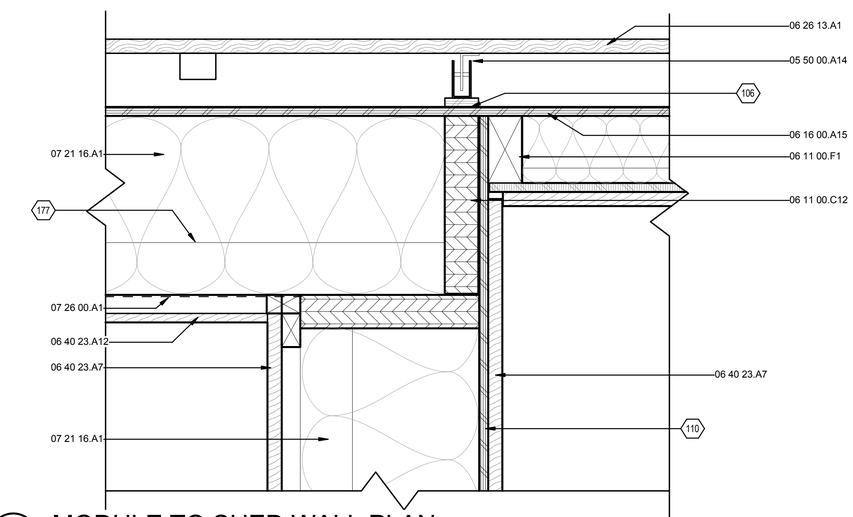

A1 MODULE TO SHED WALL PLAN
1 : 4

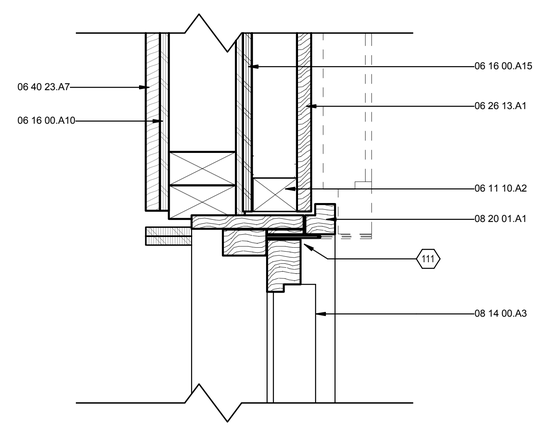

A4 SHED DOOR JAMB PLAN
1 : 4

8/13/2011 8:25:36 AM

GENERAL SHEET NOTES

REFERENCE KEYNOTES

05 50 00.A14	CLADDING WALL CHANNEL TYPE C08
06 11 00.C12	240X45MM LVL WALL STUD AT MODULE EDGE
06 11 00.F1	90X45MM TIMBER WALL STUD
06 11 10.A2	
06 16 00.A10	12MM ECOPLY LINING NAIL FIXED AT 75MM CENTRES
06 16 00.A15	12MM PLYWOOD ON 25MM CAVITY
06 26 13.A1	PANELIZED REMOVABLE HORIZONTAL SHIPLAP CEDAR WEATHERBOARDS ON 60MM CAVITY, FIXED T 735MM MAX CRS TO ALUMINIUM CAVITY BATTENS.
06 26 13.A2	PRE-FORMED EXTERNAL CEDAR CORNER COVERBOARD SECURED TO CLADDING BY STEEL SPRING CLIP AND SCREW FIXING
06 40 23.A1	83X12MM HORIZONTAL TONGUE & GROOVE RIMU TIMBER BOARD INTERIOR LINNING.
06 40 23.A2	135X19MM WHITEWASHED TONGUE & GROOVE PROFILE VERTICAL TIMBER BOARD ON 45X25 TIMBER BATTENS
06 40 23.A6	REMOVABLE COVER BOARD SCREW FIXED OVER MODULE JOIN
06 40 23.A7	135X19MM WHITEWASHED TONGUE & GROOVE PROFILE HORIZONTAL TIMBER BOARD
06 40 23.A12	83X12MM VERTICAL TONGUE & GROOVE TIMBER BOARD INTERIOR LINNING. STAINED - RESENE WATERBOURNE COLOURWOOD 'WALNUT'
07 21 16.A1	WOOL INSULATION BATTS
07 26 00.A1	PROCLIMA VAPOUR CHECK MEMBRANE
08 14 00.A3	SOLID TIMBER DOOR TO SERVICES SHED
08 20 01.A1	EX 40X50MM TIMBER REVEAL (MIMICS WINDOW JAMB DETAIL)
22 14 13.A1	55X75MM RECTANGULAR FACTORY PAINTED STEEL DOWNPIPE

SHEET KEYNOTES

31	INSTALL 2 X PF RODS BETWEEN MODULE JOINTS
103	ALL CHANNELS CLIP FIXED TO ALUMINIUM SUPPORTS ON TIMBER CAVITY BATTENS
104	INSTALL HEAVY DUTY FLASHING TAPE OVER MODULE CORNER
106	INSTALL HEAVY DUTY FLASHING TAPE OVER VERTICAL PLYWOOD JOIN
107	INSTALL HEAVY DUTY FLAHING TAPE OVER TIMBER CAVITY BATTENS AT MODULE JOIN
108	INSTALL 2X RODS TO MODULE EDGE
110	12MM PLYWOOD SHEETS LAID VERTICALLY WITH PROPRIETY 'H' FLASHING AT HORIZONTAL JOINT. FLASHING TAPE TO ALL PLYWOOD VERTICAL JOINS
111	INSTALL HEAVY DUTY, 70MM HINGE OPEN DOOR POSITION SHOWN DOTTED (FULL OPENING REQUIRED FOR EXHIBIT)
177	LINE OF 70X45MM HORIZONTAL TIMBERS AT 650MM MAX CENTRES BLOCKED OFF TIMBER STUDS AT MID MODULE

FIRST LIGHT NZ

TEAM NAME:	FIRSTLIGHT NZ
ADDRESS:	139 VIVIAN STREET TE ARO, WELLINGTON NEWZEALAND
CONTACT:	INFO@FIRSTLIGHTHOUSE.AC.NZ WWW.FIRSTLIGHTHOUSE.AC.NZ

CONSULTANTS

TENNENT + BROWN ARCHITECTS

DUNNING THORNTON CONSULTANTS LTD

LEAP AUSTRALASIA LTD

SOUTHERN PERSPECTIVES / SOLAR CITY

CLIENT

U.S. DEPARTMENT OF ENERGY

SOLAR DECATHLON 2011

WWW.SOLARDECATHLON.GOV

U.S. DEPARTMENT OF ENERGY SOLAR DECATHLON

MARK	DATE	DESCRIPTION
CN	11-01-11	FOR CONSTRUCTION

LOT NUMBER:	LOT NUMBER
DRAWN BY:	AUTHOR
CHECKED BY:	CHECKER
COPYRIGHT:	VICTORIA UNIVERSITY

SHEET TITLE

TYPICAL MODULE PLAN DETAILS

A-501

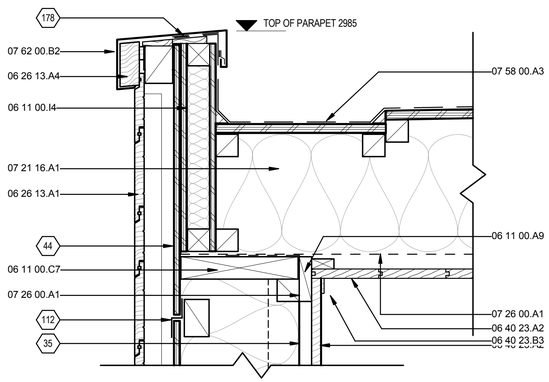

C1 END MODULE PARAPET SECTION
1 : 6

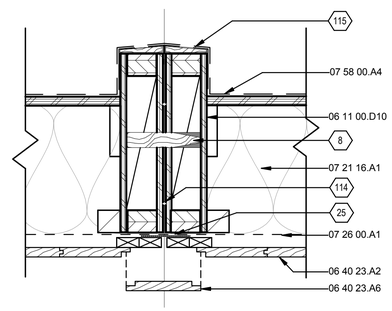

C3 TYPICAL MODULE ROOF JOINT
1 : 6

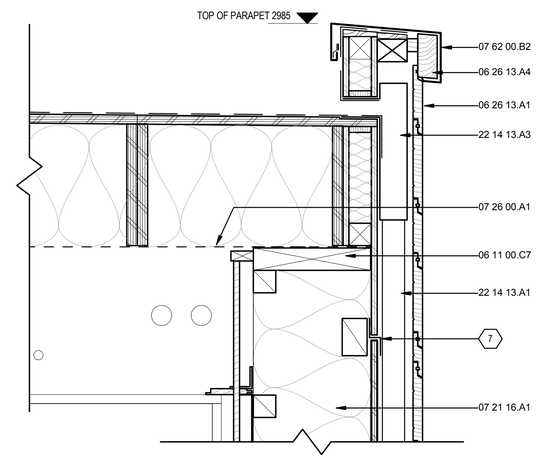

C5 DOWNPIPE ASSEMBLY SECTION
1 : 6

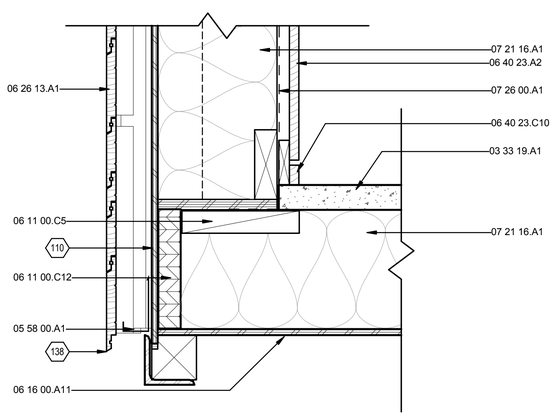

A1 END MODULE FLOOR EDGE SECTION
1 : 6

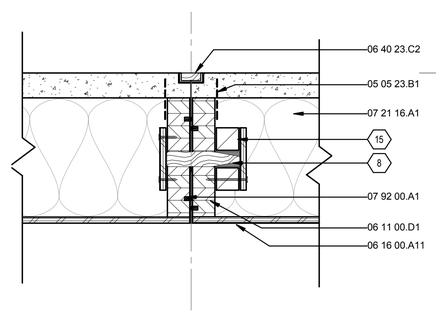

A3 TYPICAL FLOOR JOINT SECTION
1 : 6

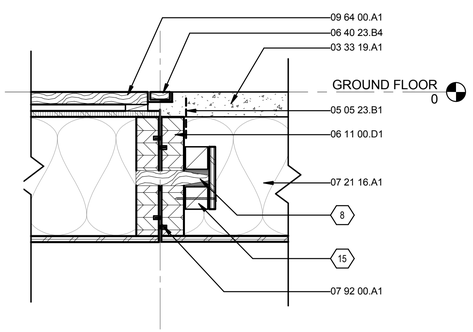

A5 KITCHEN FLOOR JOINT SECTION
1 : 6

GENERAL SHEET NOTES

REFERENCE KEYNOTES

03 33 19.A1	50MM FLEXUS ENGINEERED CEMENTITIOUS COMPOSITE CONCRETE FLOOR WITH 10MM ARDEX PANDOMO K1 LEVELLING COMPOUND. CONCRETE FIXED WITH COMPOSITE FLOOR SHEAR CONNECTORS TO TIMBER JOISTS (REFER ENGINEERS SKETCH DETAIL FOR FIXING)
05 05 23.B1	GANGNAIL PLATES TO EDGE OF LVL JOISTS CAST INTO CONCRETE FLOOR TOPPING
05 58 00.A1	
06 11 00.A9	90 X 25MM CAVITY BATTEN PERMANENTLY FIXED TO LVL TOP PLATE
06 11 00.C5	240X45MM TIMBER BLOCKING
06 11 00.C7	240X45MM TIMBER TOP PLATE
06 11 00.C12	240X45MM LVL WALL STUD AT MODULE EDGE
06 11 00.D1	240X45MM LVL FLOOR JOISTS
06 11 00.D10	360X87MM PLYWOOD BOXBEAM: 63X45MM LVL TOP AND BOTTOM CHORDS. 63X100MM LVL STIFFENERS @ 1200MM CENTRES. 12MM PLYWOOD WEBS.
06 11 00.I4	420X69MM INSULATED PLYWOOD BOX BEAM - 45X45 TIMBER TOP AND BOTTOM CHORDS, 12MM PLY WEBS
06 16 00.A11	12MM PLYWOOD LINING, TREATED AND PAINTED
06 26 13.A1	PANELIZED REMOVABLE HORIZONTAL SHIPLAP CEDAR WEATHERBOARDS ON 60MM CAVITY, FIXED T 735MM MAX CRS TO ALUMINIUM CAVITY BATTENS.
06 26 13.A4	PARAPET COVERBOARD
06 40 23.A2	135X19MM WHITEWASHED TONGUE & GROOVE PROFILE VERTICAL TIMBER BOARD ON 45X25 TIMBER BATTENS
06 40 23.A6	REMOVABLE COVER BOARD SCREW FIXED OVER MODULE JOIN
06 40 23.A12	83X12MM VERTICAL TONGUE & GROOVE TIMBER BOARD INTERIOR LINNING. STAINED - RESENE WATERBOURNE COLOURWOOD 'WALNUT'
06 40 23.B1	135X19MM WHITEWASHED TONGUE & GROOVE PROFILE PINE TIMBER BOARD TO CEILING ALIGNED TO DIRECTION INDICATED
06 40 23.B3	30X6 TIMBER TRIM TO WALL CEILING JUNCTION
06 40 23.B4	TORRIFIED ASH 47X18 TIMBER BEAD
06 40 23.C2	ALUMINIUM CHANEL AND 50 X 25 TIMBER REVEAL FITTED TO RECESS IN FLOOR BETWEEN MODULE JOINS
06 40 23.C10	40 X 19MM TIMBER TRIM TO BOTTOM OF WALL LINING WITH 10MM NEGATIVE DETAIL
07 21 16.A1	WOOL INSULATION BATTS
07 26 00.A1	PROCLIMA VAPOUR CHECK MEMBRANE
07 58 00.A3	SELECTED WPM 1.5° ROOF & GUTTER ON 18MM PLY
07 58 00.A4	SELECTED WPM 1.5° ROOF & GUTTER ON 18MM PLY, DRESSED OVER PLYWOOD BOX BEAM
07 62 00.B2	METAL PARAPET CAP FLASHING 5° FALL WITH CONTINUIOUS CLIP FIXING
07 92 00.A1	RAVEN SEAL FITTED TO TIMBER SIDES
09 64 00.A1	3M X 1.3M PANELISED 20 X 140MM TIMBER FLOORING ON 12MM PLYWOOD (PLY = 200MM WIDE AT 400MM CENTRES) AND TIMBER PACKERS
22 14 13.A1	55X75MM RECTANGULAR FACTORY PAINTED STEEL DOWNPIPE
22 14 13.A3	65X100MM PROPRIETARY SCUPPER OUTLET. WPM DRESSED INTO SCUPPER ALL ROUND

SHEET KEYNOTES

7	PROPRIETORY 'H' FLASHING AT HORIZONTAL JOINT. APPLY FLASHING TAPE TO ALL VERTICAL PLYWOOD JOINS
8	HARDWOOD TIMER LOCATOR PIN
15	SEALED TIMBER BUILT UP AROUND PIN
25	INSTALL HEAVY DUTY FLASHING TAPE OVER MODULE JOINT
35	LINE OF 140X45MM TIMBER STUDS AT 735 MAX CENTRES
44	12MM PLYWOOD TO GIVE FLUSH FINISH TO WALL AND ASSIST IN MODULE ROOF TO WALL FIXING
110	12MM PLYWOOD SHEETS LAID VERTICALLY WITH PROPRIETY 'H' FLASHING AT HORIZONTAL JOINT. FLASHING TAPE TO ALL PLYWOOD VERTICAL JOINS
112	FLEXIBLE BITUMINOUS FLASHING TO HORIZONTAL JOINTS
114	INSTALL 2X PF RODS BETWEEN MODULE JOINS
115	ADHESIVE MEMBRANE STRIP TO SUIT SECTED MEMBRANE RUN OVER MODULE PARAPET JOIN
138	OVERHANG CLADDING 35MM FROM UNDERSIDE OF FLOOR MODULE.
178	ROOFING MEMBRANE LAPPED OVER PARAPET

FIRST LIGHT NZ

TEAM NAME:	FIRSTLIGHT NZ
ADDRESS:	139 VIVIAN STREET TE ARO, WELLINGTON NEWZEALAND
CONTACT:	INFO@FIRSTLIGHTHOUSE.AC.NZ WWW.FIRSTLIGHTHOUSE.AC.NZ

CONSULTANTS

TENNENT + BROWN ARCHITECTS

DUNNING THORNTON CONSULTANTS LTD

LEAP AUSTRALASIA LTD

SOUTHERN PERSPECTIVES / SOLAR CITY

CLIENT

U.S. DEPARTMENT OF ENERGY

SOLAR DECATHLON 2011

WWW.SOLARDECATHLON.GOV

U.S. DEPARTMENT OF ENERGY SOLAR DECATHLON

MARK	DATE	DESCRIPTION
CN	11-01-11	FOR CONSTRUCTION

LOT NUMBER:	LOT NUMBER
DRAWN BY:	AUTHOR
CHECKED BY:	CHECKER
COPYRIGHT:	VICTORIA UNIVERSITY

SHEET TITLE

TYPICAL MODULE SECTION DETAILS

A-511

8/13/2011 8:25:42 AM

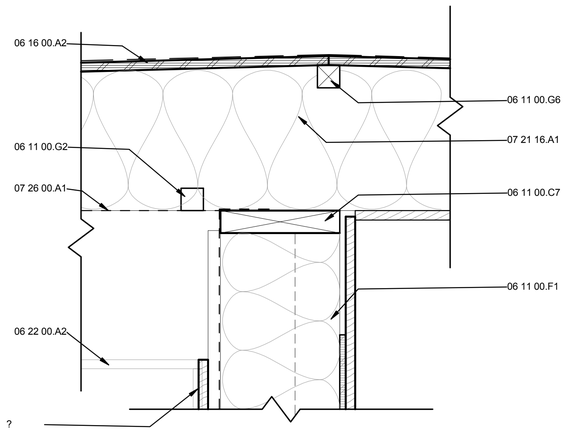

C1 MODULE TO SHED ROOF SECTION
1 : 6

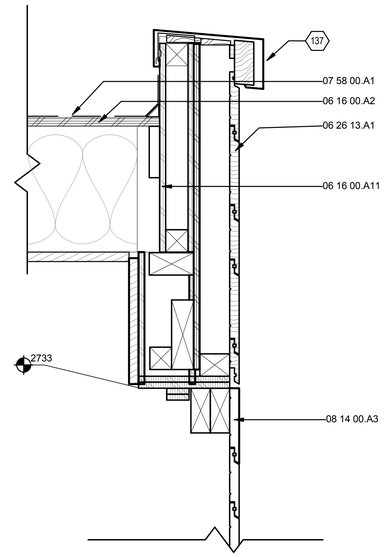

C4 SHED DOOR (SOLID) HEAD SECTION
1 : 6

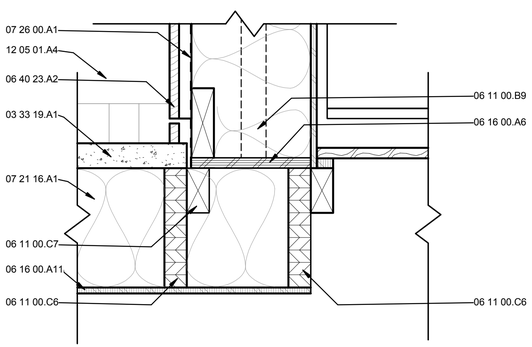

A1 SHED FLOOR SECTION
1 : 6

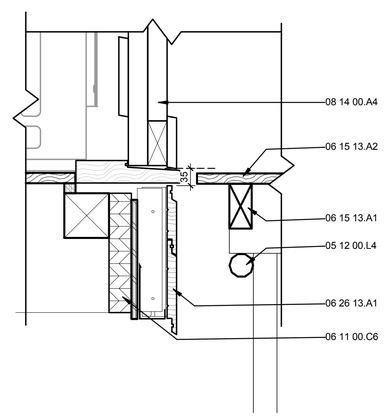

A4 SHED DOOR SILL SECTION (VENTILATED)
1 : 6

GENERAL SHEET NOTES

REFERENCE KEYNOTES

03 33 19.A1	50MM FLEXUS ENGINEERED CEMENTITIOUS COMPOSITE CONCRETE FLOOR WITH 10MM ARDEX PANDOMO K1 LEVELLING COMPOUND. CONCRETE FIXED WITH COMPOSITE FLOOR SHEAR CONNECTORS TO TIMBER JOISTS (REFER ENGINEERS SKETCH DETAIL FOR FIXING)
05 12 00.L4	48MM STANDARD SCAFFOLD POLE
06 11 00.B9	140X45MM TIMBER STUD
06 11 00.C6	240X45MM LVL FLOOR JOIST
06 11 00.C7	240X45MM TIMBER TOP PLATE
06 11 00.F1	90X45MM TIMBER WALL STUD
06 11 00.G2	45X45MM BLOCKING TIMBER
06 11 00.G6	45X45MM CONTINUOUS TIMBER
06 15 13.A1	90X45MM BLOCKING TIMBER
06 15 13.A2	90X21MM DECKING TIMBER
06 16 00.A2	18MM PLYWOOD
06 16 00.A6	21MM PLYWOOD BOTTOM PLATE
06 16 00.A11	12MM PLYWOOD LINING, TREATED AND PAINTED
06 16 00.A12	12MM PLYWOOD LINING ON 45X25 TIMBER BATTENS
06 22 00.A2	WASHING MACHINE CABINET
06 26 13.A1	PANELIZED REMOVABLE HORIZONTAL SHIPLAP CEDAR WEATHERBOARDS ON 60MM CAVITY, FIXED T 735MM MAX CRS TO ALUMINIUM CAVITY BATTENS.
06 40 23.A2	135X19MM WHITEWASHED TONGUE & GROOVE PROFILE VERTICAL TIMBER BOARD ON 45X25 TIMBER BATTENS
07 21 16.A1	WOOL INSULATION BATTS
07 26 00.A1	PROCLIMA VAPOUR CHECK MEMBRANE
07 58 00.A1	BUTYNOL ROOFING MEMBRANE ON PLYWOOD SUBSTRATE. 1.5° FALL TO ROOF.
08 14 00.A3	SOLID TIMBER DOOR TO SERVICES SHED
08 14 00.A4	VENTILATED TIMBER DOOR TO SERVICES SHED
12 05 01.A4	CUSTOM BED UNIT BY OTHERS

SHEET KEYNOTES

137	SIDE FIXED OVER NEOPRENE SPACER

FIRST LIGHT NZ

TEAM NAME:	FIRSTLIGHT NZ
ADDRESS:	139 VIVIAN STREET TE ARO, WELLINGTON NEWZEALAND
CONTACT:	INFO@FIRSTLIGHTHOUSE.AC.NZ WWW.FIRSTLIGHTHOUSE.AC.NZ

CONSULTANTS

TENNENT + BROWN ARCHITECTS

DUNNING THORNTON CONSULTANTS LTD

LEAP AUSTRALASIA LTD

SOUTHERN PERSPECTIVES / SOLAR CITY

CLIENT

U.S. DEPARTMENT OF ENERGY

SOLAR DECATHLON 2011

WWW.SOLARDECATHLON.GOV

U.S. DEPARTMENT OF ENERGY SOLAR DECATHLON

MARK	DATE	DESCRIPTION
CN	11-01-11	FOR CONSTRUCTION

LOT NUMBER:	LOT NUMBER
DRAWN BY:	Author
CHECKED BY:	Checker
COPYRIGHT:	VICTORIA UNIVERSITY

SHEET TITLE

SHED SECTION DETAILS

A-512

8/13/2011 8:25:47 AM

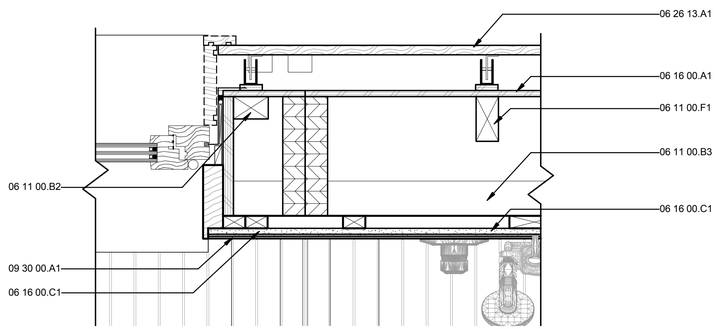

C1 SHOWER WALL WINDOW PLAN
1 : 6

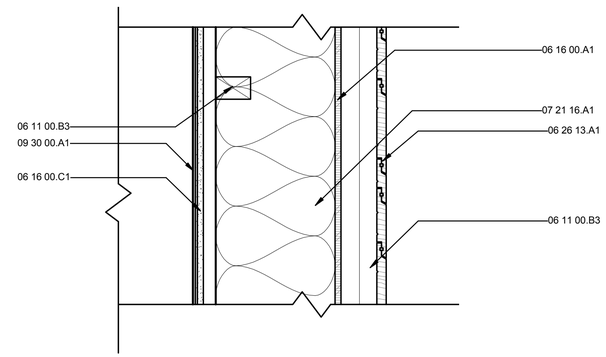

C4 SHOWER WALL DETAIL SECTION
1 : 6

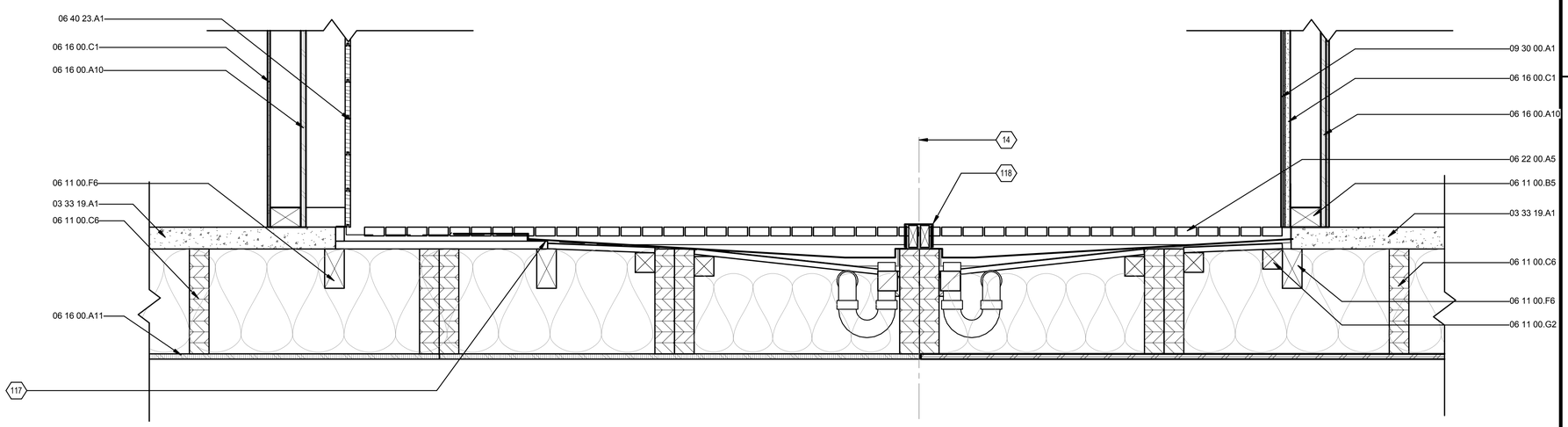

A1 SHOWER FLOOR SECTION
1 : 6

GENERAL SHEET NOTES

REFERENCE KEYNOTES

03 33 19.A1	50MM FLEXUS ENGINEERED CEMENTITIOUS COMPOSITE CONCRETE FLOOR WITH 10MM ARDEX PANDOMO K1 LEVELLING COMPOUND. CONCRETE FIXED WITH COMPOSITE FLOOR SHEAR CONNECTORS TO TIMBER JOISTS (REFER ENGINEERS SKETCH DETAIL FOR FIXING)
06 11 00.B2	70X45MM TIMBER STUD
06 11 00.B3	70X45MM HORIZONTAL TIMBER
06 11 00.B5	70X45MM TIMBER BOTTOM PLATE
06 11 00.C6	240X45MM LVL FLOOR JOIST
06 11 00.F1	90X45MM TIMBER WALL STUD
06 11 00.F6	90X45MM TIMBER BLOCKING
06 11 00.G2	45X45MM BLOCKING TIMBER
06 16 00.A1	12MM PLYWOOD BRACING SHEETS LAID VERTICALLY
06 16 00.A10	12MM ECOPLY LINING NAIL FIXED AT 75MM CENTRES
06 16 00.A11	12MM PLYWOOD LINING, TREATED AND PAINTED
06 16 00.C1	CEMENT FIBRE BOARD
06 22 00.A5	BATHROOM CABINET WITH 1150MM LED BAR MOUNTED ABOVE AND BELOW. REFER DETAIL DRAWINGS
06 22 00.K46	KITCHEN MODULE EAST
06 26 13.A1	PANELIZED REMOVABLE HORIZONTAL SHIPLAP CEDAR WEATHERBOARDS ON 60MM CAVITY, FIXED T 735MM MAX CRS TO ALUMINIUM CAVITY BATTENS.
06 40 23.A1	83X12MM HORIZONTAL TONGUE & GROOVE RIMU TIMBER BOARD INTERIOR LINNING.
07 21 16.A1	WOOL INSULATION BATTS
09 30 00.A1	

SHEET KEYNOTES

14	MODULE BOUNDARY
117	WPM APPLIED UNDER STAINLESS SHOWER TRAY, SECONDRY LAYER APPLIED OVER STEEL AT EDGE
118	STAINLESS STEEL 'CAP' OVER STAINLESS STEEL SADDLE FLASHING INSTALLED ON SITE AFTER MODULE JOIN

FIRST LIGHT NZ

TEAM NAME:	FIRSTLIGHT NZ
ADDRESS:	139 VIVIAN STREET TE ARO, WELLINGTON NEWZEALAND
CONTACT:	INFO@FIRSTLIGHTHOUSE.AC.NZ WWW.FIRSTLIGHTHOUSE.AC.NZ

CONSULTANTS

TENNENT + BROWN ARCHITECTS
DUNNING THORNTON CONSULTANTS LTD
LEAP AUSTRALASIA LTD
SOUTHERN PERSPECTIVES / SOLAR CITY

CLIENT

U.S. DEPARTMENT OF ENERGY
SOLAR DECATHLON 2011
WWW.SOLARDECATHLON.GOV

U.S. DEPARTMENT OF ENERGY SOLAR DECATHLON

MARK	DATE	DESCRIPTION
CN	11-01-11	FOR CONSTRUCTION

LOT NUMBER:	LOT NUMBER
DRAWN BY:	Author
CHECKED BY:	Checker
COPYRIGHT:	VICTORIA UNIVERSITY

SHEET TITLE

BATHROOM SECTION DETAILS

A-513

8/13/2011 8:25:53 AM

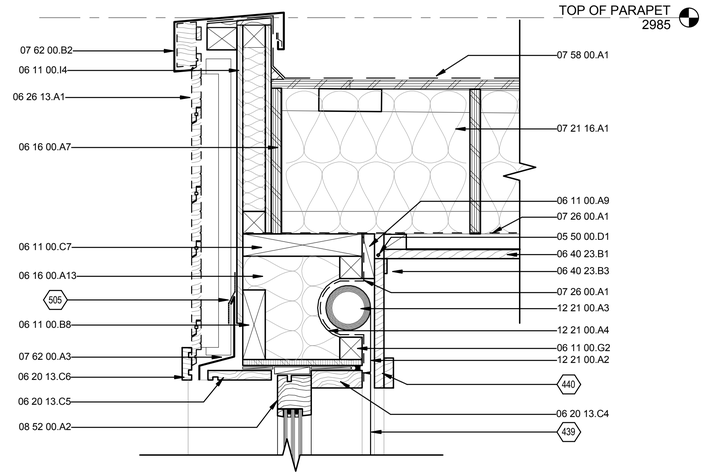

D1 FIXED WINDOW HEAD SECTION
1 : 6

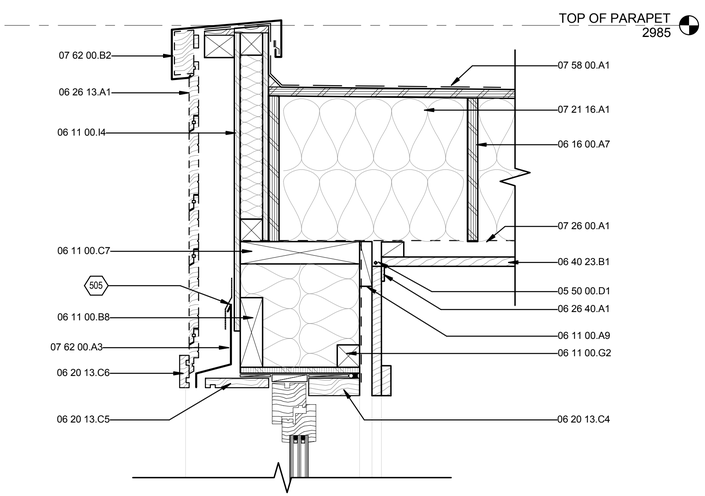

D4 HINGED WINDOW HEAD SECTION
1 : 6

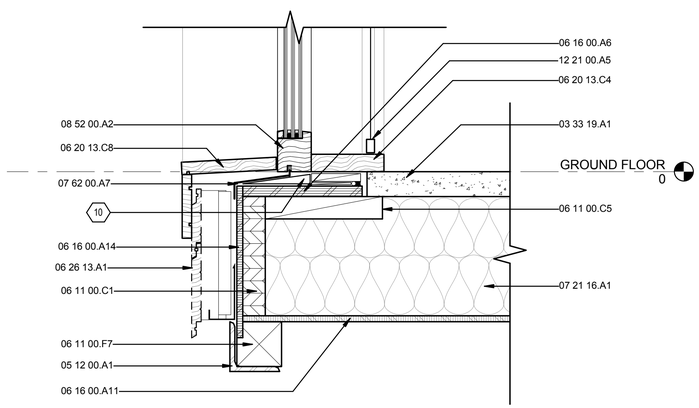

B11 FIXED WINDOW SILL SECTION
1 : 6

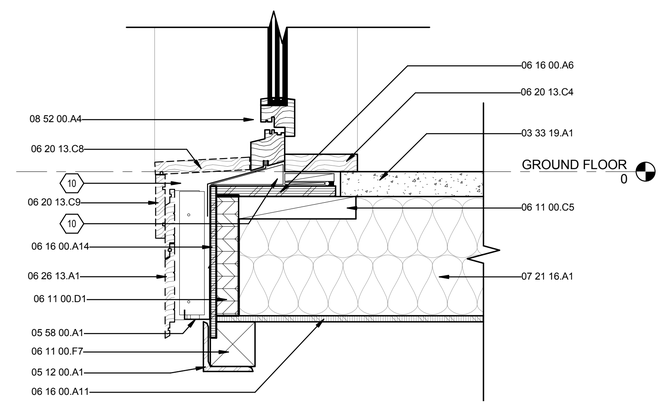

B4 HINGED WINDOW SILL SECTION
1 : 6

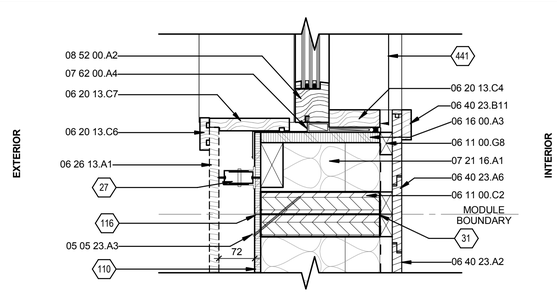

A1 FIXED WINDOW JAMB PLAN
1 : 6

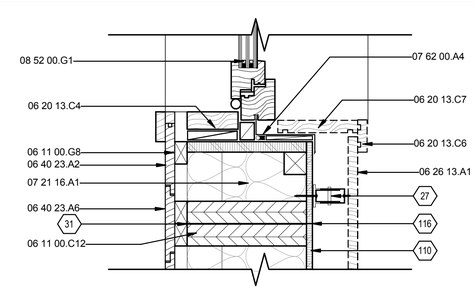

A4 HINGED WINDOW JAMB PLAN
1 : 6

REFERENCE KEYNOTES

03 33 19.A1	50MM FLEXUS ENGINEERED CEMENTITIOUS COMPOSITE CONCRETE FLOOR WITH 10MM ARDEX PANDOMO K1 LEVELLING COMPOUND. CONCRETE FIXED WITH COMPOSITE FLOOR SHEAR CONNECTORS TO TIMBER JOISTS (REFER ENGINEERS SKETCH DETAIL FOR FIXING)
05 05 23.A3	120MM COACH SCREW FIXINGS @ MID HEIGHT OF WALL
05 12 00.A1	100X100X10MM EA FOUNDATION BEARER
05 50 00.D1	6MM Ø STAINLESS STEEL CABLE CONTINUOUS ALONG LENGTH OF BUILDING - TENSIONED ON SITE PRIOR TO PANEL FIXING.
05 58 00.A1	
06 11 00.A9	90 X 25MM CAVITY BATTEN PERMANENTLY FIXED TO LVL TOP PLATE
06 11 00.B8	140X45MM TIMBER AND PLYWOOD FORMING BOX BEAM LINTEL
06 11 00.C1	240X45MM LVL TRIMMING JOIST
06 11 00.C2	240X45MM LVL WALL STUD
06 11 00.C5	240X45MM TIMBER BLOCKING
06 11 00.C7	240X45MM TIMBER TOP PLATE
06 11 00.C12	240X45MM LVL WALL STUD AT MODULE EDGE
06 11 00.D1	240X45MM LVL FLOOR JOISTS
06 11 00.F7	90X90MM TIMBER EDGE BLOCK, NOTCHED AROUND PLYWOOD
06 11 00.G2	45X45MM BLOCKING TIMBER
06 11 00.G8	45X25MM INTERNAL TIMBER CAVITY BATTENS
06 11 00.I4	420X69MM INSULATED PLYWOOD BOX BEAM - 45X45 TIMBER TOP AND BOTTOM CHORDS, 12MM PLY WEBS
06 16 00.A3	21MM PLYWOOD
06 16 00.A6	21MM PLYWOOD BOTTOM PLATE
06 16 00.A7	21MM PLYWOOD RIBS AT 400M CENTRES. CNC CUT TO FALLS.
06 16 00.A11	12MM PLYWOOD LINING, TREATED AND PAINTED
06 16 00.A13	12MM PLYWOOD GUSSET @ MID SPAN AND ENDS
06 16 00.A14	12MM PLYWOOD SHEETS, FLASHING TAPE VERTICAL JOINS. LAP 30 OVER 90 X 90 TIMBEREDGE BLOCK
06 20 13.C4	35MM REVEALS TO WINDOW - CUT TO FIT ON SITE
06 20 13.C5	REMOVABLE 140 X 25MM TIMBER REVEAL SCREW FIXED, WITH 5 X 5 DRIP GROOVE.
06 20 13.C6	REMOVABLE 18 X 60MM TIMBER FACING FIXED TO REMOVABLE WEATHERBOARD PANELS
06 20 13.C7	REMOVABLE 160 X 25MM TIMBER REVEAL SCREW FIXED, 20MM COVER TO CLADING PANEL
06 20 13.C8	REMOVEABLE 190 X 25MM TIMBER SILL
06 20 13.C9	REMOVABLE 18 X 130MM TIMBER FACING FIXED TO REMOVABLE WEATHERBOARD PANELS
06 26 13.A1	PANELIZED REMOVABLE HORIZONTAL SHIPLAP CEDAR WEATHERBOARDS ON 60MM CAVITY, FIXED T 735MM MAX CRS TO ALUMINIUM CAVITY BATTENS.
06 26 40.A1	83X12MM TOUNGE AND GROOVE RIMU BOARDS NAIL FIXED THROUGH TOUNGE TO METAL BATTEN
06 40 23.A2	135X19MM WHITEWASHED TONGUE & GROOVE PROFILE VERTICAL TIMBER BOARD ON 45X25 TIMBER BATTENS
06 40 23.A6	REMOVABLE COVER BOARD SCREW FIXED OVER MODULE JOIN
06 40 23.B1	135X19MM WHITEWASHED TONGUE & GROOVE PROFILE PINE TIMBER BOARD TO CEILING ALIGNED TO DIRECTION INDICATED
06 40 23.B3	30X6 TIMBER TRIM TO WALL CEILING JUNCTION
06 40 23.B11	60 X 19 WHITEWASHED PINE ARCHITRAVES TO WINDOWS IN LIVING SPACES
07 21 16.A1	WOOL INSULATION BATTS
07 26 00.A1	PROCLIMA VAPOUR CHECK MEMBRANE
07 58 00.A1	BUTYNOL ROOFING MEMBRANE ON PLYWOOD SUBSTRATE. 1.5° FALL TO ROOF.
07 62 00.A3	FLEXIBLE BITUMOUS HEAD FLASHING
07 62 00.A4	FACTORY PAINTED STEEL BACK FLASHING, SEAL TO WINDOW FRAME
07 62 00.A7	FACTORY PAINTED STEEL SILL FLASHING. SEAL TO WINDOW FRAME
07 62 00.B2	METAL PARAPET CAP FLASHING 5° FALL WITH CONTINUIOUS CLIP FIXING
08 52 00.A2	FIXED TIMBER WINDOW, 36MM TRIPPLE GLAZED 'ECOWINDOWS' STANDARD FIXED PROFILE
08 52 00.A4	TOP HINGED TIMBER WINDOW, 36MM TRIPPLE GLAZED 'ECOWINDOWS' STANDARD FIXED PROFILE
08 52 00.G1	
12 21 00.A2	BRUSH ATTACHED TO INSIDE OF JAMB TO PREVENT AIR FLOW AROUND BLIND WHEN PULLED DOWN
12 21 00.A3	CONCEALED WINDOW ROLLER BLIND
12 21 00.A4	CUT PLASTIC PIPE FIXED TO 45 X 45MM TIMBERS TO CONTAIN INSULATION WITHIN WALL. 118MM DIA NOTCH TO PLYWOOD GUSSET AT EACH END TO ALLOW FOR ROLLER BLIND.
12 21 00.A5	27 X 16MM RECTANGULAR BOTTOM PROFILE TO BLIND. COLOUR WHITE - WITH BRUSH INSTALLED TO LOWER EDGE

SHEET KEYNOTES

10	TIMBER BLOCKING WHERE REQUIRED
27	ALUMINIUM LOCKING CHANNEL. SEE SPECIFICATION FOR MORE DETAIL.
31	INSTALL 2 X PF RODS BETWEEN MODULE JOINTS
110	12MM PLYWOOD SHEETS LAID VERTICALLY WITH PROPRIETY 'H' FLASHING AT HORIZONTAL JOINT. FLASHING TAPE TO ALL PLYWOOD VERTICAL JOINS
116	INSTALL HEAVY DUTY FLASHING TAPE OVER MODULE JOINT
439	BLIND ROLLS OUT WITHIN CAVITY SPACE
440	REMOVABLE WALL PANEL TO ALLOW MAINTENANCE ACCESS TO BLIND. SCREW FIXED ON SITE AND DOWELLED.
441	ROLLER BLIND PULLS DOWN INSIDE CAVITY - OVERLAPS WINDOW FRAME 25MM EITHER SIDE
505	INSTALL HEAVY DUTY FLASHING TAPE OVER HEAD FLASHINGS

FIRST LIGHT NZ

TEAM NAME:	FIRSTLIGHT NZ
ADDRESS:	139 VIVIAN STREET TE ARO, WELLINGTON NEWZEALAND
CONTACT:	INFO@FIRSTLIGHTHOUSE.AC.NZ WWW.FIRSTLIGHTHOUSE.AC.NZ

CONSULTANTS

TENNENT + BROWN ARCHITECTS

DUNNING THORNTON CONSULTANTS LTD

LEAP AUSTRALASIA LTD

SOUTHERN PERSPECTIVES / SOLAR CITY

CLIENT

U.S. DEPARTMENT OF ENERGY

SOLAR DECATHLON 2011

WWW.SOLARDECATHLON.GOV

U.S. DEPARTMENT OF ENERGY SOLAR DECATHLON

MARK	DATE	DESCRIPTION
CN	11-01-11	FOR CONSTRUCTION

LOT NUMBER:	LOT NUMBER
DRAWN BY:	AUTHOR
CHECKED BY:	CHECKER
COPYRIGHT:	VICTORIA UNIVERSITY

SHEET TITLE

FIXED & HINGED WINDOW DETAILS

A-531

8/13/2011 8:25:59 AM

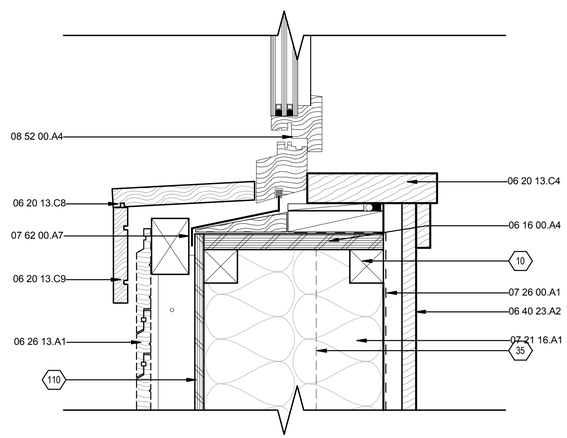

A4 BATHROOM & LAUNDRY WINDOW SILL
1 : 4

GENERAL SHEET NOTES

REFERENCE KEYNOTES

06 16 00.A4	12MM PLYWOOD
06 20 13.C4	35MM REVEALS TO WINDOW - CUT TO FIT ON SITE
06 20 13.C8	REMOVEABLE 190 X 25MM TIMBER SILL
06 20 13.C9	REMOVABLE 18 X 130MM TIMBER FACING FIXED TO REMOVABLE WEATHERBOARD PANELS
06 26 13.A1	PANELIZED REMOVABLE HORIZONTAL SHIPLAP CEDAR WEATHERBOARDS ON 60MM CAVITY, FIXED T 735MM MAX CRS TO ALUMINIUM CAVITY BATTENS.
06 40 23.A2	135X19MM WHITEWASHED TONGUE & GROOVE PROFILE VERTICAL TIMBER BOARD ON 45X25 TIMBER BATTENS
07 21 16.A1	WOOL INSULATION BATTS
07 26 00.A1	PROCLIMA VAPOUR CHECK MEMBRANE
07 62 00.A7	FACTORY PAINTED STEEL SILL FLASHING. SEAL TO WINDOW FRAME
08 52 00.A4	TOP HINGED TIMBER WINDOW, 36MM TRIPPLE GLAZED 'ECOWINDOWS' STANDARD FIXED PROFILE

SHEET KEYNOTES

10	TIMBER BLOCKING WHERE REQUIRED
35	LINE OF 140X45MM TIMBER STUDS AT 735 MAX CENTRES
110	12MM PLYWOOD SHEETS LAID VERTICALLY WITH PROPRIETY 'H' FLASHING AT HORIZONTAL JOINT. FLASHING TAPE TO ALL PLYWOOD VERTICAL JOINS

FIRST LIGHT NZ

TEAM NAME: FIRSTLIGHT NZ
ADDRESS: 139 VIVIAN STREET
TE ARO, WELLINGTON
NEWZEALAND
CONTACT: INFO@FIRSTLIGHTHOUSE.AC.NZ
WWW.FIRSTLIGHTHOUSE.AC.NZ

CONSULTANTS

TENNENT + BROWN ARCHITECTS
DUNNING THORNTON CONSULTANTS LTD
LEAP AUSTRALASIA LTD
SOUTHERN PERSPECTIVES / SOLAR CITY

CLIENT

U.S. DEPARTMENT OF ENERGY
SOLAR DECATHLON 2011
WWW.SOLARDECATHLON.GOV

U.S. DEPARTMENT OF ENERGY SOLAR DECATHLON

MARK	DATE	DESCRIPTION
CN	11-01-11	FOR CONSTRUCTION

LOT NUMBER:	LOT NUMBER
DRAWN BY:	Author
CHECKED BY:	Checker
COPYRIGHT:	VICTORIA UNIVERSITY

SHEET TITLE

WINDOW SILL DETAIL

A-532

8/13/2011 8:26:02 AM

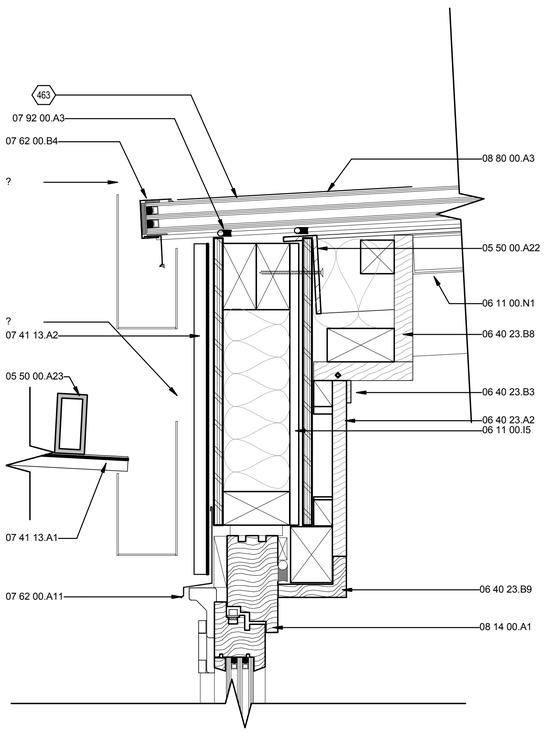

C1 BI-FOLD HEAD AND SKYLIGHT SECTION
1 : 4

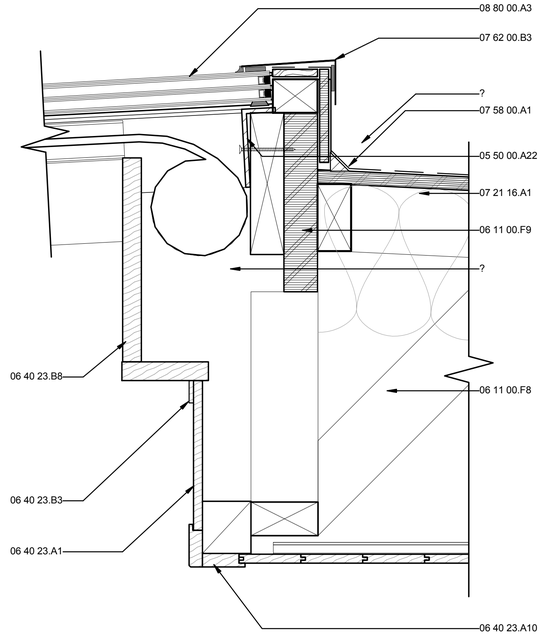

C3 SKYLIGHT HEAD SECTION
1 : 4

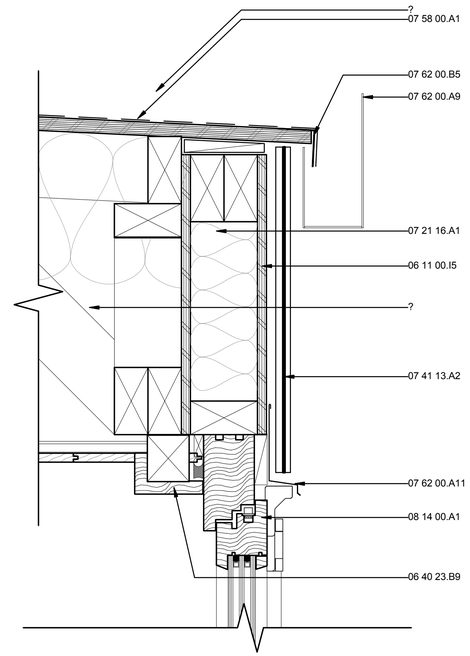

C5 BI-FOLD HEAD SECTION
1 : 4

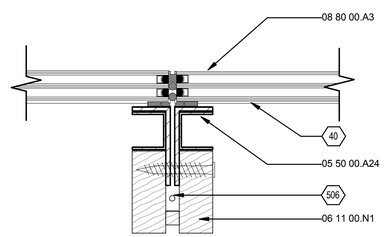

A3 SKYLIGHT - BEAM SECTION
1 : 4

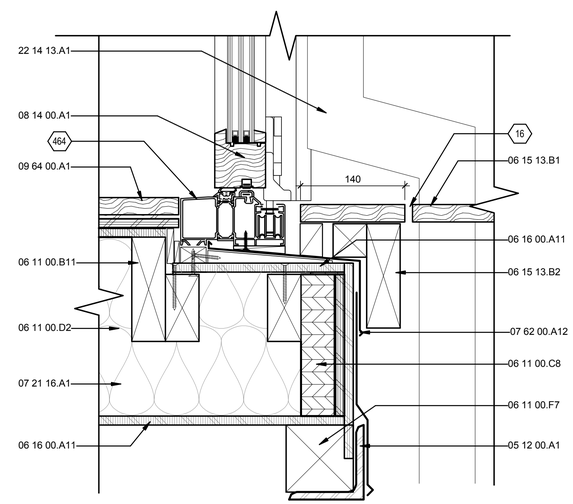

A5 BI-FOLD SILL TO DECK SECTION
1 : 4

GENERAL SHEET NOTES

REFERENCE KEYNOTES

05 12 00.A1	100X100X10MM EA FOUNDATION BEARER
05 50 00.A22	45X 110 X 6MM MS ANGLE FRAMES (3 UNITS) SCREW FIXED AT 300MM CENTRES (DRILL HOLES AT 200MM CENTRES) TO LVL BEAM
05 50 00.A23	80 X 40 X 6 ALUMINIUM RHS
05 50 00.A24	MOTORISED SKYLIGHT BLINDS RUN IN 50 X 45 ALUMINIUM CHANEL
06 11 00.B11	140X45MM TIMBER BLOCKING BETWEEN FLOOR JOISTS
06 11 00.C8	190X45MM LVL TRIMMING JOIST
06 11 00.D2	240X45MM LVL FLOOR JOISTS AT 500 MAX CENTRES NOTCHED 50 X 185MM AT DOOR SILL.
06 11 00.F7	90X90MM TIMBER EDGE BLOCK, NOTCHED AROUND PLYWOOD
06 11 00.F8	45° BRACING STRUT - 90 X 40MM
06 11 00.F9	240 X 45MM LVL ROOF BEAM
06 11 00.I5	340 X 114MM INSULATED PLYWOOD BOX BEAM - 2(45X90) TIMBER TOP CHORD AND 45 X 90 BOTTOM CHORD, 12MM PLY WEBS
06 11 00.N1	2 (100 X 45MM) DRESSED TIMBER RAFTERS BOLT FIXED TO SKYLIGHT ANGLE FRAME. BOLT HEADS RECESSED FLUSH. FINISH TIMBER 12MM SHORT OF TIMBER REVEAL.
06 15 13.B1	PANELISED 25 X 140MM DECKING TIMBERS
06 15 13.B2	140 X 45MM TIMBER TRIMMER, FIXED THROUGH 20MM PACKER OVER DOWNSTAND OF SILL FLASHING. SECONDARY PACKING AT TOP TO FIX DECKING.
06 16 00.A3	21MM PLYWOOD
06 16 00.A11	12MM PLYWOOD LINING, TREATED AND PAINTED
06 40 23.A1	83X12MM HORIZONTAL TONGUE & GROOVE RIMU TIMBER BOARD INTERIOR LINNING.
06 40 23.A2	135X19MM WHITEWASHED TONGUE & GROOVE PROFILE VERTICAL TIMBER BOARD ON 45X25 TIMBER BATTENS
06 40 23.A10	EX 57X18MM INTERIOR TIMBER TRIM TO OPENINGS
06 40 23.B3	30X6 TIMBER TRIM TO WALL CEILING JUNCTION
06 40 23.B8	25MM DRESSED TIMBER FACING
06 40 23.B9	90 X 25MM DRESSED TIMBER REVEAL, 10MM NEGATIVE DETAIL TO WALL LINNING, SOLID TIMBER BLOCKING BEHIND
07 21 16.A1	WOOL INSULATION BATTS
07 41 13.A1	METALCRAFT PROFILED CORRUGATE ROOFING AT 3°. BOLT FIXED TO STEEL ANGLE
07 41 13.A2	CORRUGATED ALUMINIUM CLADDING
07 58 00.A1	BUTYNOL ROOFING MEMBRANE ON PLYWOOD SUBSTRATE. 1.5° FALL TO ROOF.
07 62 00.A9	CUSTOM FORMED 0.55 BMT PAINTED STEEL WITH GUTTER OVERFLOW HOLES AT HEIGHT OF REAR GUTTER UPSTAND
07 62 00.A10	CUSTOM FORMED 0.55 BMT PAINTED STEEL WITH GUTTER OVERFLOW HOLES
07 62 00.A11	PAINTED STEEL HEAD FLASHING, FLASHING TAPE TO PLYWOOD BOX BEAM
07 62 00.A12	PAINTED STEEL SILL FLASHING BELOW BI-FOLD FRAME. 5° FALL. ENCASE TOP EDGE OF AFLASHING WITH NEOPRENE SLEEVE TO REDUCE THERMAL BRIDGING.
07 62 00.B3	CONTINUOUS ALUMINIUM ANGLE FLASHING SEALED TO GLAZING AND UPSTAND OF WPM ROOF. INSTALL NEOPRENE PACKING BETWEEN ANGLE & GLAZING.
07 62 00.B4	CONTINIOUS ALUMINIUM ANGLE WITH CUSTOM UNDERFLASHING SEALED TO SPOUTING. INSTALL NEOPRENE PACKER BETWEEN ANGLE AND GLAZING
07 62 00.B5	45 X 45MM ALUMINIUM ANGLE REBATED TO EDGE OF PLYWOOD. WPM TO RUN OVER
07 92 00.A3	AIR SEAL
08 14 00.A1	TRIPLE GLAZED EXTERIOR BIFOLD DOOR
08 80 00.A3	TRIPPLE GLAZED THREE PART CUSTOM SKYLIGHT STRUCTUALLY SEALED TO MS ANGLE FRAMES. 42MM, 3° FALL
09 64 00.A1	3M X 1.3M PANELISED 20 X 140MM TIMBER FLOORING ON 12MM PLYWOOD (PLY = 200MM WIDE AT 400MM CENTRES) AND TIMBER PACKERS
12 21 00.A1	MOTORISED ROLLOUT THERMAL SKYLIGHT INSULATION UNDER SKYLIGHT.
22 14 13.A1	55X75MM RECTANGULAR FACTORY PAINTED STEEL DOWNPIPE

SHEET KEYNOTES

16	TOP OF DECK SITS 10MM LOWER THAN INTERNAL FINISHED FLOOR LEVEL
40	JOINT STRUCTURALLY GLAZED AND SEALED TO WINDOW MANUFACTURERS SPECIFICATIONS
463	WHITE PAINT FINISH TO GLASS TO PREVENT OVERHEATING IN WALL CAVITY
464	TRIM 25MM FLANGE OFF BI-FOLD SILL TO ACHIEVE FLUSH PROFILE AS SHOWN
506	WIRES FOR DINING TABLE LIGHT RUN THROUGH CAVITY BETWEEN TIMBER RAFTERS

FIRST LIGHT NZ

TEAM NAME:	FIRSTLIGHT NZ
ADDRESS:	139 VIVIAN STREET TE ARO, WELLINGTON NEWZEALAND
CONTACT:	INFO@FIRSTLIGHTHOUSE.AC.NZ WWW.FIRSTLIGHTHOUSE.AC.NZ

CONSULTANTS

TENNENT + BROWN ARCHITECTS

DUNNING THORNTON CONSULTANTS LTD

LEAP AUSTRALASIA LTD

SOUTHERN PERSPECTIVES / SOLAR CITY

CLIENT

U.S. DEPARTMENT OF ENERGY

SOLAR DECATHLON 2011

WWW.SOLARDECATHLON.GOV

U.S. DEPARTMENT OF ENERGY SOLAR DECATHLON

MARK	DATE	DESCRIPTION
CN	11-01-11	FOR CONSTRUCTION

LOT NUMBER:	LOT NUMBER
DRAWN BY:	Author
CHECKED BY:	Checker
COPYRIGHT:	VICTORIA UNIVERSITY

SHEET TITLE

SKYLIGHT & BIFOLD DOOR DETAILS

A-533

8/13/2011 8:26:09 AM

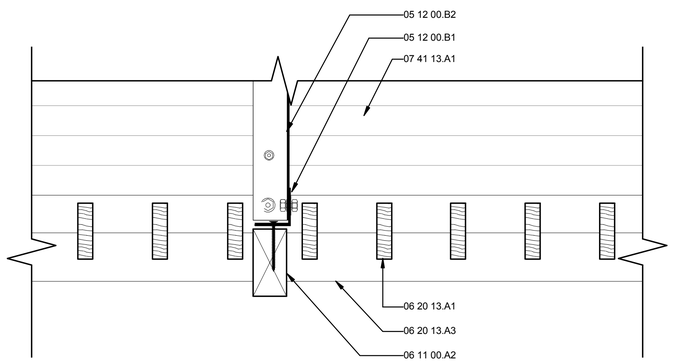

D1 AWNING TO CANOPY PLAN
1 : 4

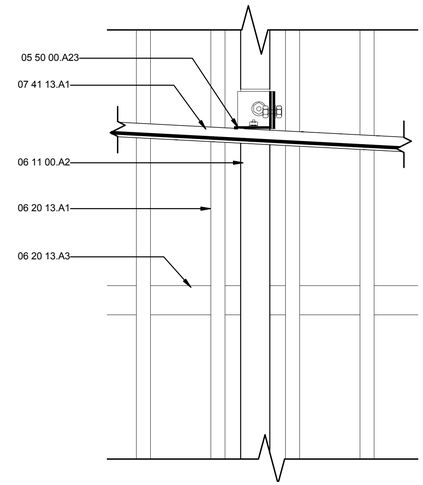

D5 AWNING TO CANOPY SECTION
1 : 4

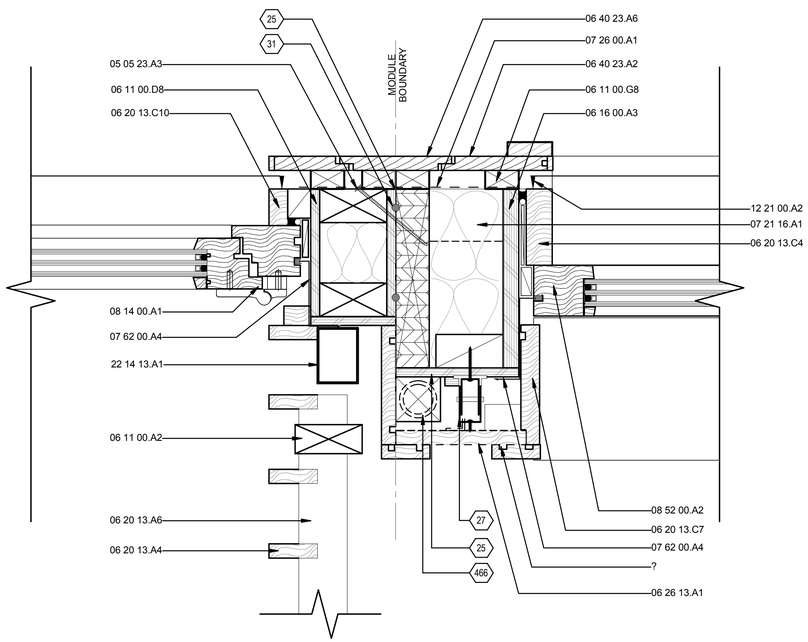

A1 BI-FOLD & FIXED WINDOW JAMB PLAN
1 : 4

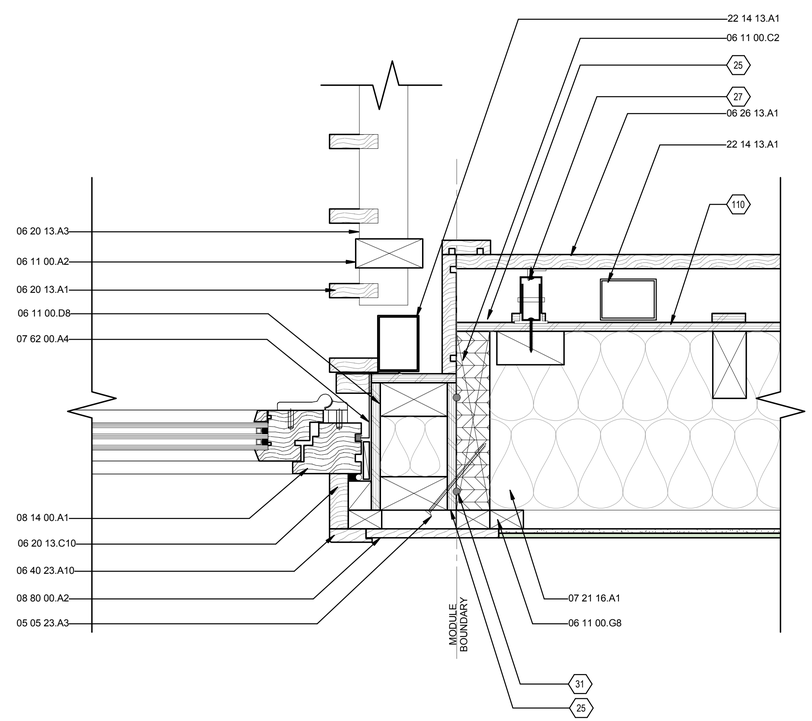

A4 BI-FOLD JAMB PLAN
1 : 4

GENERAL SHEET NOTES

REFERENCE KEYNOTES

05 05 23.A3	120MM COACH SCREW FIXINGS @ MID HEIGHT OF WALL
05 12 00.B1	50 X 50MM VERTICAL STEEL ANGLE SUPPORT BRACKET
05 12 00.B2	50 X 50MM STEEL ANGLE TO SUPPORT CANOPY
05 50 00.A23	80 X 40 X 6 ALUMINIUM RHS
06 11 00.A2	90 X 45MM TIMBER SUPPORT STUD
06 11 00.C2	240X45MM LVL WALL STUD
06 11 00.D8	90 X 45MM INSULATED TIMBER AND PLYWOOD BOXPOST
06 11 00.G8	45X25MM INTERNAL TIMBER CAVITY BATTENS
06 16 00.A3	21MM PLYWOOD
06 20 13.A1	65X19MM CEDAR SLATS @100MM CENTRES.
06 20 13.A3	60X45MM HORIZONTAL CEDAR SUPPORT BATTEN AT 562 MAX CENTRES
06 20 13.A4	75X19MM VERTICAL CEDAR SLATS AT 100MM CENTRES FIXED TO 65X45MM HORIZONTAL BATTENS
06 20 13.A6	65X39MM HORIZONTAL CEDAR BATTEN (NOTCHED)
06 20 13.C4	35MM REVEALS TO WINDOW - CUT TO FIT ON SITE
06 20 13.C6	REMOVABLE 18 X 60MM TIMBER FACING FIXED TO REMOVABLE WEATHERBOARD PANELS
06 20 13.C7	REMOVABLE 160 X 25MM TIMBER REVEAL SCREW FIXED, 20MM COVER TO CLADING PANEL
06 20 13.C10	25MM REVEALS TO WINDOW - CUT TO FIT ON SITE
06 26 13.A1	PANELIZED REMOVABLE HORIZONTAL SHIPLAP CEDAR WEATHERBOARDS ON 60MM CAVITY, FIXED T 735MM MAX CRS TO ALUMINIUM CAVITY BATTENS.
06 40 23.A2	135X19MM WHITEWASHED TONGUE & GROOVE PROFILE VERTICAL TIMBER BOARD ON 45X25 TIMBER BATTENS
06 40 23.A6	REMOVABLE COVER BOARD SCREW FIXED OVER MODULE JOIN
06 40 23.A10	EX 57X18MM INTERIOR TIMBER TRIM TO OPENINGS
07 21 16.A1	WOOL INSULATION BATTS
07 26 00.A1	PROCLIMA VAPOUR CHECK MEMBRANE
07 41 13.A1	METALCRAFT PROFILED CORRUGATE ROOFING AT 3°. BOLT FIXED TO STEEL ANGLE
07 62 00.A4	FACTORY PAINTED STEEL BACK FLASHING, SEAL TO WINDOW FRAME
08 14 00.A1	TRIPLE GLAZED EXTERIOR BIFOLD DOOR
08 52 00.A2	FIXED TIMBER WINDOW, 36MM TRIPPLE GLAZED 'ECOWINDOWS' STANDARD FIXED PROFILE
08 80 00.A2	6MM TOUGHENED GLASS SPLASHBACK FROSTED AND BACK PAINTED ON 6MM COMPRESSED FIBRE CEMENT SHEET. LAP OVER STAINLESS UPTURN.
12 21 00.A2	BRUSH ATTACHED TO INSIDE OF JAMB TO PREVENT AIR FLOW AROUND BLIND WHEN PULLED DOWN
22 14 13.A1	55X75MM RECTANGULAR FACTORY PAINTED STEEL DOWNPIPE

SHEET KEYNOTES

25	INSTALL HEAVY DUTY FLASHING TAPE OVER MODULE JOINT
27	ALUMINIUM LOCKING CHANNEL. SEE SPECIFICATION FOR MORE DETAIL.
31	INSTALL 2 X PF RODS BETWEEN MODULE JOINTS
110	12MM PLYWOOD SHEETS LAID VERTICALLY WITH PROPRIETY 'H' FLASHING AT HORIZONTAL JOINT. FLASHING TAPE TO ALL PLYWOOD VERTICAL JOINS
466	SCAFFOLD FOUNDATION SHOWN BELOW

FIRST LIGHT NZ

TEAM NAME:	FIRST LIGHT
ADDRESS:	139 VIVIAN STREET TE ARO, WELLINGTON NEWZEALAND
CONTACT:	ELINUTTALL@GMAIL.COM WWW.FIRSTLIGHTHOUSE.AC.NZ

CONSULTANTS

TENNENT + BROWN ARCHITECTS

DUNNING THORNTON CONSULTANTS LTD

LEAP AUSTRALASIA LTD

SOUTHERN PERSPECTIVES / SOLAR CITY

CLIENT

U.S. DEPARTMENT OF ENERGY

SOLAR DECATHLON 2011

WWW.SOLARDECATHLON.GOV

U.S. DEPARTMENT OF ENERGY SOLAR DECATHLON

MARK	DATE	DESCRIPTION
CN	11-01-11	FOR CONSTRUCTION

LOT NUMBER:	LOT NUMBER
DRAWN BY:	Author
CHECKED BY:	Checker
COPYRIGHT:	

SHEET TITLE

BIFOLD & CANOPY DETAILS

A-534

8/13/2011 8:26:14 AM

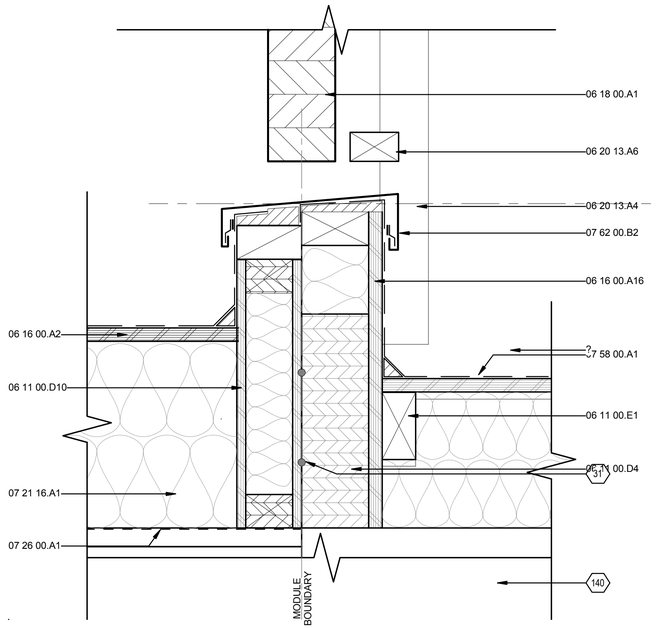

C1 ROOF EDGE OVER KITCHEN SECTION
1 : 4

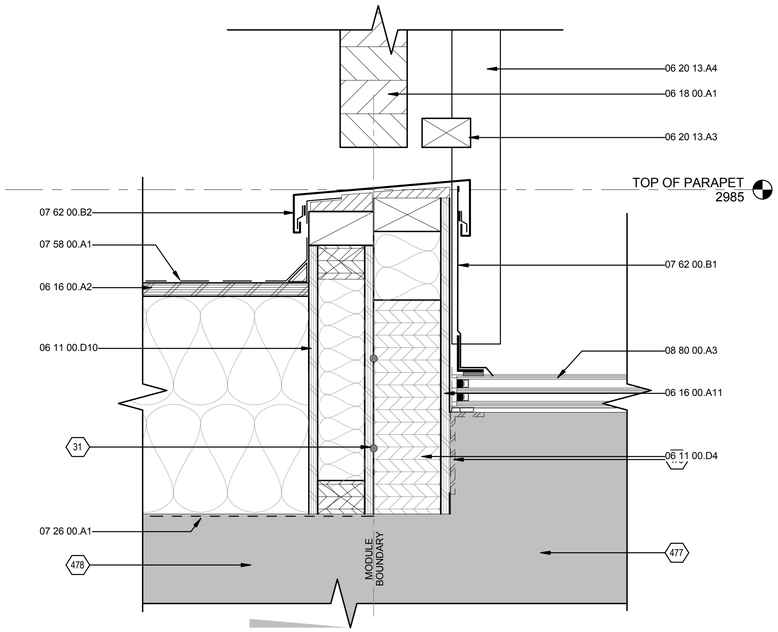

C4 SKYLIGHT PERIMETER LOW POINT SECTION
1 : 4

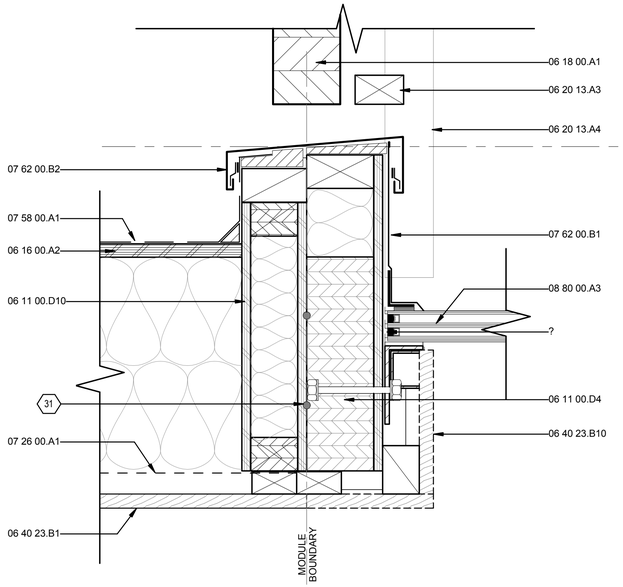

A1 SKYLIGHT PERIMETER MID POINT SECTION
1 : 4

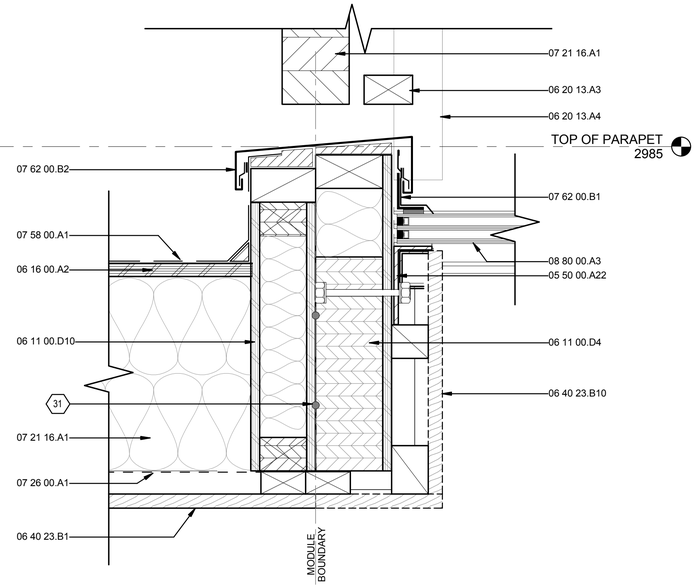

A4 SKYLIGHT PERIMETER HIGH POINT SECTION
1 : 4

GENERAL SHEET NOTES

REFERENCE KEYNOTES

05 50 00.A22	45X 110 X 6MM MS ANGLE FRAMES (3 UNITS) SCREW FIXED AT 300MM CENTRES (DRILL HOLES AT 200MM CENTRES) TO LVL BEAM
06 11 00.D4	287 X 93 CONTINUOUS LVL BEAM
06 11 00.D10	360X87MM PLYWOOD BOXBEAM: 63X45MM LVL TOP AND BOTTOM CHORDS. 63X100MM LVL STIFFENERS @ 1200MM CENTRES. 12MM PLYWOOD WEBS.
06 11 00.E1	90 X 45MM TIMBER
06 16 00.A2	18MM PLYWOOD
06 16 00.A3	21MM PLYWOOD
06 16 00.A11	12MM PLYWOOD LINING, TREATED AND PAINTED
06 16 00.A16	FORM 12MM PLYWOOD ROOF UPSTAND WITH SOLID TIMBER BLOCKING AND APPLY WPM. ASSEMBLY IS PRE-MEMBRANED AND SLOTTED OVER LVL BEAM ON SITE.
06 18 00.A1	318X90MM GLUE-LAMINATED TIMBER BEAM SPANNING BETWEEN COLUMNS, TAPERING TO 135X90 @ CANTILEVERED ENDS. REFER FABRICATION DRAWINGS.
06 20 13.A3	60X45MM HORIZONTAL CEDAR SUPPORT BATTEN AT 562 MAX CENTRES
06 20 13.A4	75X19MM VERTICAL CEDAR SLATS AT 100MM CENTRES FIXED TO 65X45MM HORIZONTAL BATTENS
06 20 13.A6	65X39MM HORIZONTAL CEDAR BATTEN (NOTCHED)
06 40 23.B1	135X19MM WHITEWASHED TONGUE & GROOVE PROFILE PINE TIMBER BOARD TO CEILING ALIGNED TO DIRECTION INDICATED
06 40 23.B10	REMOVABLE TIMBER FACING CUT TO FALL OF SKYLIGHT
07 21 16.A1	WOOL INSULATION BATTS
07 26 00.A1	PROCLIMA VAPOUR CHECK MEMBRANE
07 58 00.A1	BUTYNOL ROOFING MEMBRANE ON PLYWOOD SUBSTRATE. 1.5° FALL TO ROOF.
07 62 00.B1	REMOVABLE FACTORY PAINTED FLASHING. TAPERED TO SKYLIGHT FALL.
07 62 00.B2	METAL PARAPET CAP FLASHING 5° FALL WITH CONTINUIOUS CLIP FIXING
08 80 00.A3	TRIPPLE GLAZED THREE PART CUSTOM SKYLIGHT STRUCTUALLY SEALED TO MS ANGLE FRAMES. 42MM, 3° FALL

SHEET KEYNOTES

31	INSTALL 2 X PF RODS BETWEEN MODULE JOINTS
140	SERVICES BULKHEAD
477	SECTION CUTS THROUGH TIMBER FRAMING AND BI-FOLD SECTION - NOT SHOWN FOR CLARITY
478	SECTION CUTS THROUGH INSULATED TIMBER WALL - NOT SHOWN FOR CLARITY
479	WELDED ANGLE FRAME TO SKYLIGHT OCCURS TO INSIDE EDGE OF LINTEL (SHOWN DOTTED BEHIND)

FIRST LIGHT NZ

TEAM NAME:	FIRSTLIGHT NZ
ADDRESS:	139 VIVIAN STREET TE ARO, WELLINGTON NEWZEALAND
CONTACT:	INFO@FIRSTLIGHTHOUSE.AC.NZ WWW.FIRSTLIGHTHOUSE.AC.NZ

CONSULTANTS

TENNENT + BROWN ARCHITECTS

DUNNING THORNTON CONSULTANTS LTD

LEAP AUSTRALASIA LTD

SOUTHERN PERSPECTIVES / SOLAR CITY

CLIENT

U.S. DEPARTMENT OF ENERGY

SOLAR DECATHLON 2011

WWW.SOLARDECATHLON.GOV

U.S. DEPARTMENT OF ENERGY SOLAR DECATHLON

MARK	DATE	DESCRIPTION
CN	11-01-11	FOR CONSTRUCTION

LOT NUMBER:	LOT NUMBER
DRAWN BY:	Author
CHECKED BY:	Checker
COPYRIGHT:	VICTORIA UNIVERSITY

SHEET TITLE

SKYLIGHT JAMB DETAILS

A-535

8/13/2011 8:26:19 AM

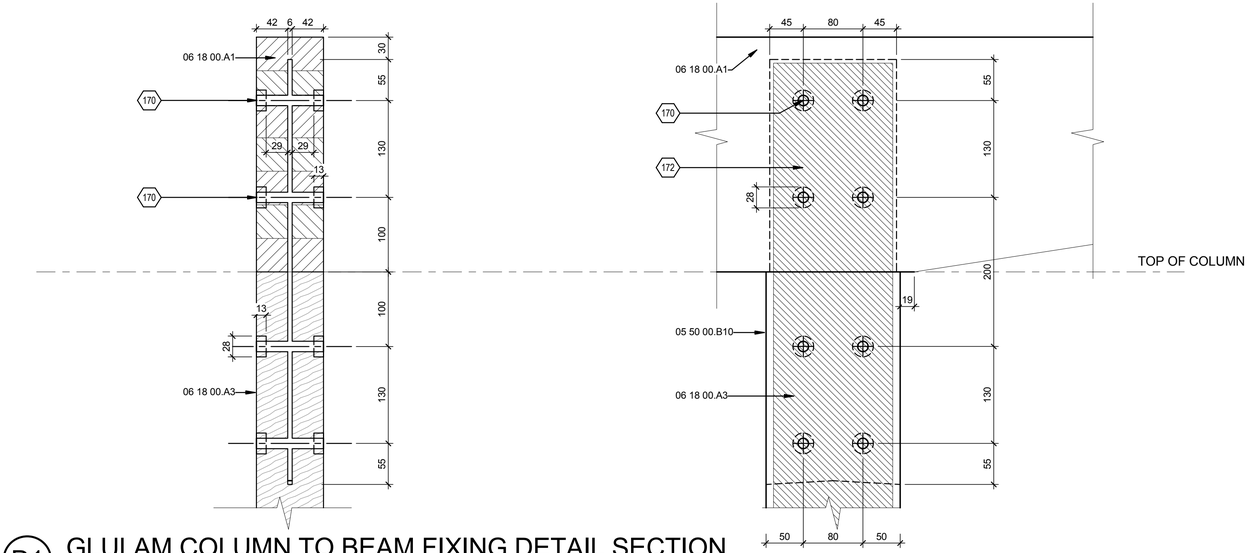

D1 GLULAM COLUMN TO BEAM FIXING DETAIL SECTION
1 : 4

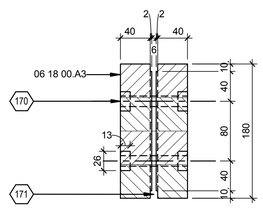

C1 GLULAM COLUMN FIXING PLAN DETAIL
1 : 4

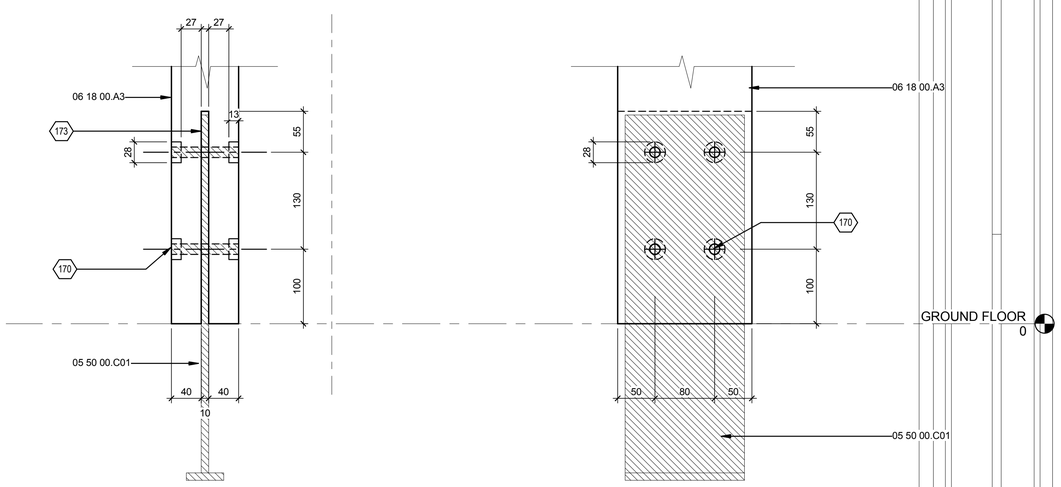

A1 GLULAM COLUMN BASE FIXING SECTION DETAIL
1 : 4

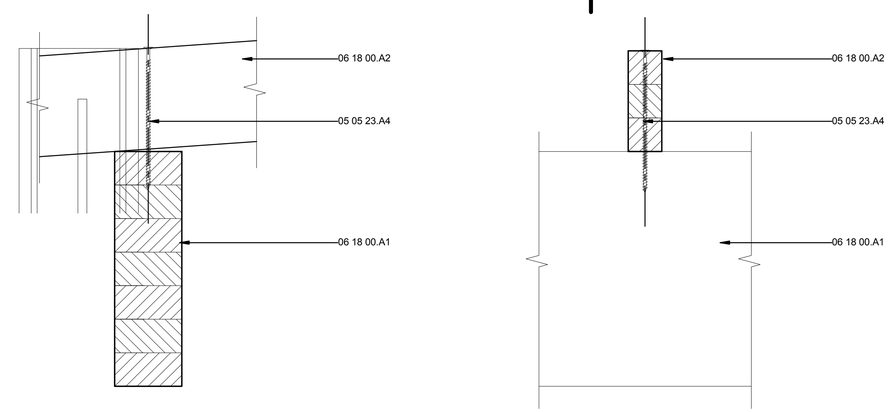

B5 GLULAM RAFTER TO BEAM FIXING DETAIL SECTION
1 : 4

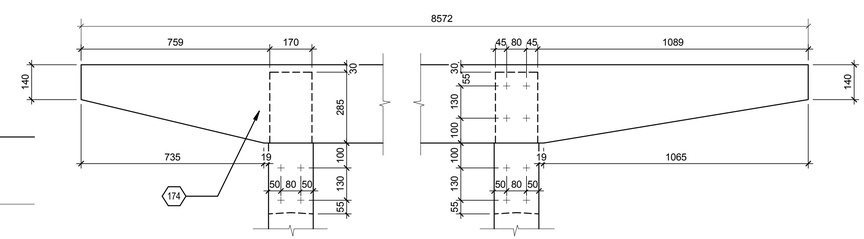

A5 GLULAM BEAM FIXING LOCATIONS - ELEVATION
1 : 12

GENERAL SHEET NOTES

REFERENCE KEYNOTES

05 05 23.A4	1 NO. 10MM DIAMETER X 220MM SPAX SCREW - CSK HEAD
05 50 00.B10	6MM STAINLESS STEEL PLATE
05 50 00.C01	10MM STEEL FOUNDATION PLATE
06 18 00.A1	318X90MM GLUE-LAMINATED TIMBER BEAM SPANNING BETWEEN COLUMNS, TAPERING TO 135X90 @ CANTILEVERED ENDS. REFER FABRICATION DRAWINGS.
06 18 00.A2	135X42MM GLULAM GL8 RAFTERS AT 750MM NOM. CENTRES SPANNIG FULL LENGTH OF CANOPY, TAPERING TO 70X42MM @ CANTILEVERED END. REFER FABRICATION DRAWINGS.
06 18 00.A3	90X180MM GLULAM GL10 COLUMN. REFER FABRICATION DRAWINGS.

SHEET KEYNOTES

170	14MMØ HOLES FOR M12 STAINLESS STEEL HEXHEAD BOLTS. RECESSED TO SUIT BOLT DIMENSION - 28MM DIAMETER X 13MM RECESS
171	SLOT CUT FOR 6MM S/S PLATE AT TOP OF COLUMN, 10X10MM REBATE TO EDGE. SLOT CUT FOR 10MM STEEL FOUNDATION PLATE AT BASE OF COLUMN
172	IMPORTANT; NOTCH FOR STEEL BOLTS ONLY AT ONE END OF BEAM. SEE BEAM ELEVATION
173	10MM SLOT CUT FULL WIDTH THROUGH COLUMN
174	IMPORTANT: NOTCH FOR STEEL PLATE ONLY AT THIS SIDE OF BEAM - NO BOLT HOLES

FIRST LIGHT NZ

TEAM NAME: FIRST LIGHT
ADDRESS: 139 VIVIAN STREET TE ARO, WELLINGTON NEWZEALAND
CONTACT: ELINUTTALL@GMAIL.COM WWW.FIRSTLIGHTHOUSE.AC.NZ

CONSULTANTS

TENNENT + BROWN ARCHITECTS
DUNNING THORNTON CONSULTANTS LTD
LEAP AUSTRALASIA LTD
SOUTHERN PERSPECTIVES / SOLAR CITY

CLIENT

U.S. DEPARTMENT OF ENERGY
SOLAR DECATHLON 2011
WWW.SOLARDECATHLON.GOV

U.S. DEPARTMENT OF ENERGY SOLAR DECATHLON

MARK	DATE	DESCRIPTION
CN	11-01-11	FOR CONSTRUCTION

LOT NUMBER:	LOT NUMBER
DRAWN BY:	Author
CHECKED BY:	Checker
COPYRIGHT:	

SHEET TITLE

GLULAM FIXING DETAILS

A-581

8/13/2011 8:26:24 AM

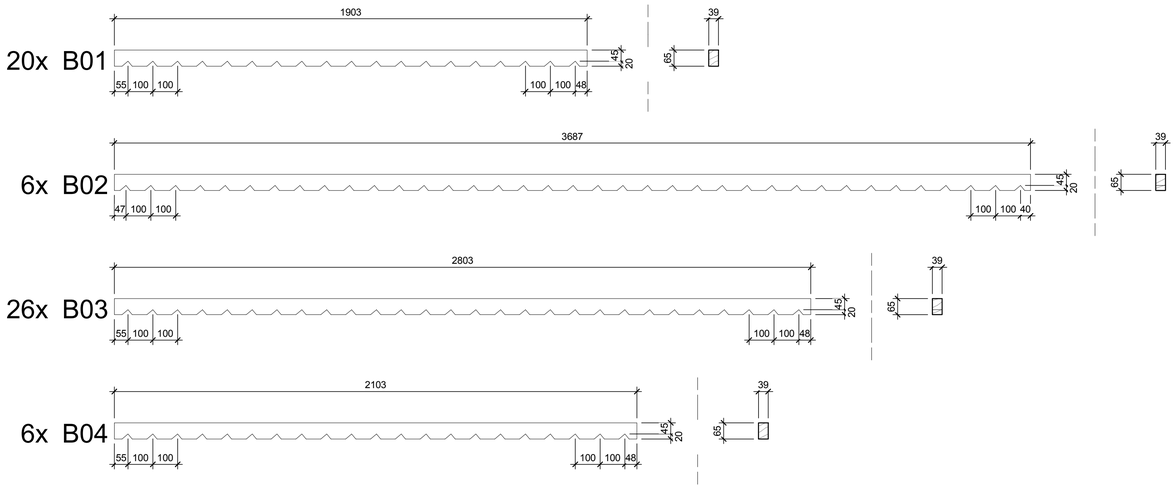

C1 CANOPY BATTEN CUTTING SCHEDULE

1 : 12

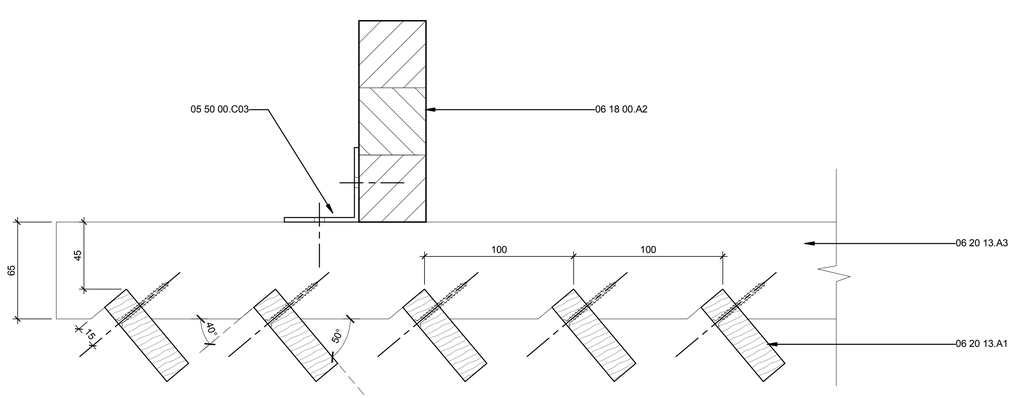

A1 CANOPY BATTEN FIXING DETAIL SECTION

1 : 2

8/13/2011 8:26:28 AM

GENERAL SHEET NOTES

REFERENCE KEYNOTES

05 50 00.C03	50 X 50 X 3MM STAINLESS STEEL ANGLE BRACKET (40MM WIDTH). ENGINEER TO SPECIFY FIXINGS
06 18 00.A2	135X42MM GLULAM GL8 RAFTERS AT 750MM NOM. CENTRES SPANNIG FULL LENGTH OF CANOPY, TAPERING TO 70X42MM @ CANTILEVERED END. REFER FABRICATION DRAWINGS.
06 20 13.A1	65X19MM CEDAR SLATS @100MM CENTRES.
06 20 13.A3	60X45MM HORIZONTAL CEDAR SUPPORT BATTEN AT 562 MAX CENTRES

SHEET KEYNOTES

FIRST LIGHT NZ

TEAM NAME:	FIRST LIGHT
ADDRESS:	139 VIVIAN STREET TE ARO, WELLINGTON NEWZEALAND
CONTACT:	ELINUTTALL@GMAIL.COM WWW.FIRSTLIGHTHOUSE.AC.NZ

CONSULTANTS

TENNENT + BROWN ARCHITECTS

DUNNING THORNTON CONSULTANTS LTD

LEAP AUSTRALASIA LTD

SOUTHERN PERSPECTIVES / SOLAR CITY

CLIENT

U.S. DEPARTMENT OF ENERGY

SOLAR DECATHLON 2011

WWW.SOLARDECATHLON.GOV

U.S. DEPARTMENT OF ENERGY SOLAR DECATHLON

MARK	DATE	DESCRIPTION
CN	11-01-11	FOR CONSTRUCTION

LOT NUMBER:	LOT NUMBER
DRAWN BY:	Author
CHECKED BY:	Checker
COPYRIGHT:	

SHEET TITLE

CANOPY BATTENS

A-582

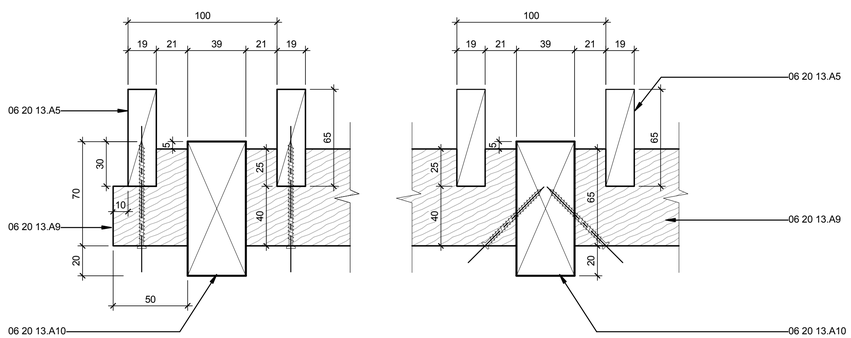

B1 CANOPY BATTEN FIXING DETAIL - PLAN

1 : 2

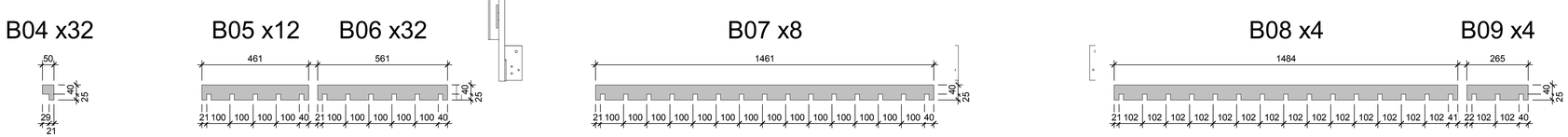

A1 VERTICAL SLAT BATTENS

1 : 12

0 1/2' 1' 2'

GENERAL SHEET NOTES

REFERENCE KEYNOTES

06 20 13.A5	19X65MM VERTICAL CEDAR SLAT
06 20 13.A9	39X65MM NOTCHED CEDAR BATTEN
06 20 13.A10	39X90MM CEDAR STUD

SHEET KEYNOTES

FIRST LIGHT NZ

TEAM NAME:	FIRST LIGHT
ADDRESS:	139 VIVIAN STREET TE ARO, WELLINGTON NEWZEALAND
CONTACT:	ELINUTTALL@GMAIL.COM WWW.FIRSTLIGHTHOUSE.AC.NZ

CONSULTANTS

TENNENT + BROWN ARCHITECTS
DUNNING THORNTON CONSULTANTS LTD
LEAP AUSTRALASIA LTD
SOUTHERN PERSPECTIVES / SOLAR CITY

CLIENT

U.S. DEPARTMENT OF ENERGY
SOLAR DECATHLON 2011
WWW.SOLARDECATHLON.GOV

U.S. DEPARTMENT OF ENERGY SOLAR DECATHLON

MARK	DATE	DESCRIPTION
CN	11-01-11	FOR CONSTRUCTION

LOT NUMBER:	LOT NUMBER
DRAWN BY:	Author
CHECKED BY:	Checker
COPYRIGHT:	

SHEET TITLE

CANOPY BATTENS
VERTICAL SLATS

A-583

8/13/2011 8:26:32 AM

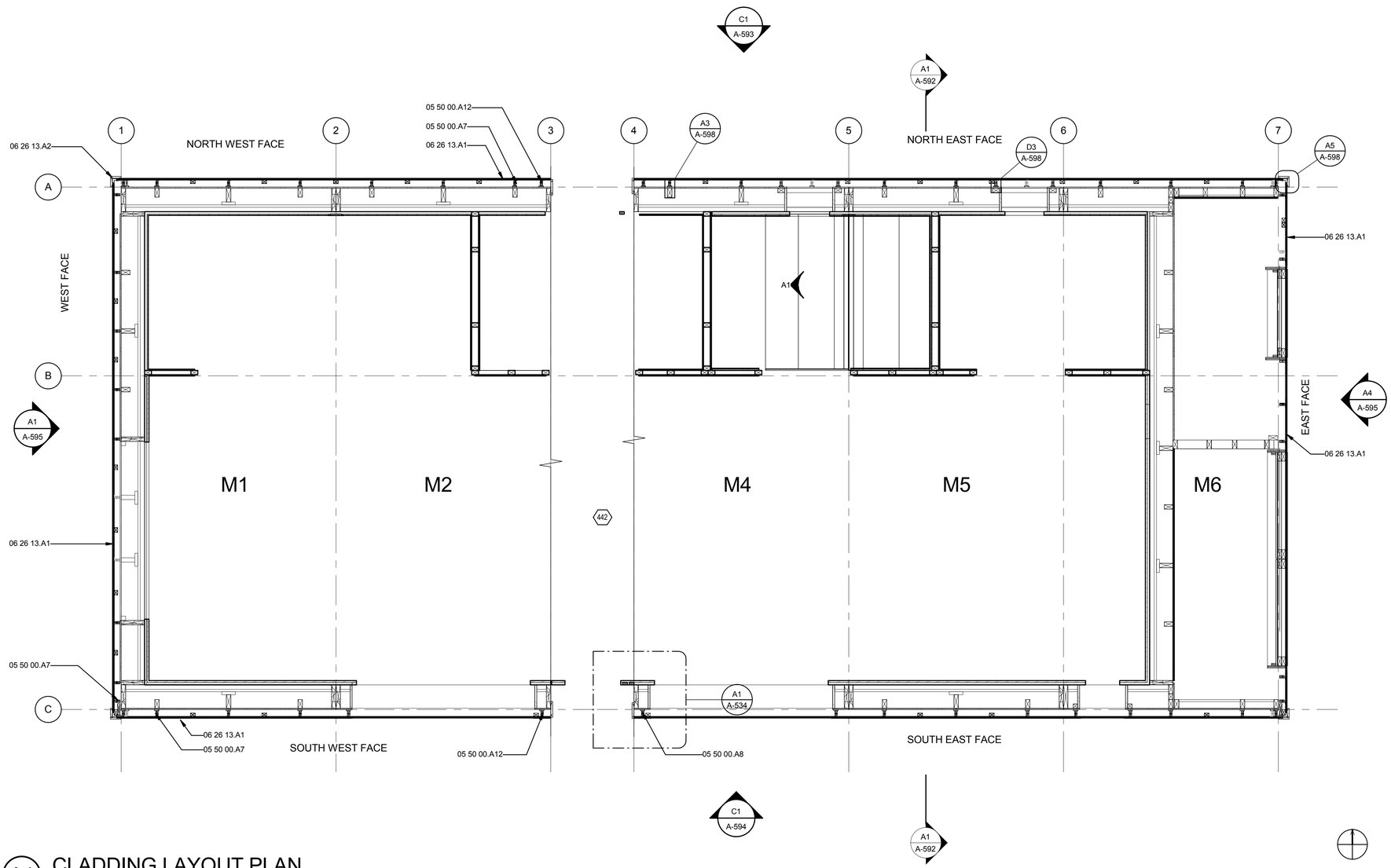

A1 CLADDING LAYOUT PLAN

1 : 24

0 1/2" 1' 1 1/2'

8/13/2011 8:26:38 AM

GENERAL SHEET NOTES

REFERENCE KEYNOTES

05 50 00.A7	CLADDING WALL CHANNEL TYPE C01
05 50 00.A8	CLADDING WALL CHANNEL TYPE C01A
05 50 00.A12	CLADDING WALL CHANNEL TYPE C06
06 26 13.A1	PANELIZED REMOVABLE HORIZONTAL SHIPLAP CEDAR WEATHERBOARDS ON 60MM CAVITY, FIXED T 735MM MAX CRS TO ALUMINIUM CAVITY BATTENS.
06 26 13.A2	PRE-FORMED EXTERNAL CEDAR CORNER COVERBOARD SECURED TO CLADDING BY STEEL SPRING CLIP AND SCREW FIXING

SHEET KEYNOTES

442	MODULE 3 OMITTED FOR CLARITY

FIRST LIGHT NZ

TEAM NAME:	FIRSTLIGHT NZ
ADDRESS:	139 VIVIAN STREET TE ARO, WELLINGTON NEWZEALAND
CONTACT:	INFO@FIRSTLIGHTHOUSE.AC.NZ WWW.FIRSTLIGHTHOUSE.AC.NZ

CONSULTANTS

TENNENT + BROWN ARCHITECTS

DUNNING THORNTON CONSULTANTS LTD

LEAP AUSTRALASIA LTD

SOUTHERN PERSPECTIVES / SOLAR CITY

CLIENT

U.S. DEPARTMENT OF ENERGY

SOLAR DECATHLON 2011

WWW.SOLARDECATHLON.GOV

U.S. DEPARTMENT OF ENERGY SOLAR DECATHLON

MARK	DATE	DESCRIPTION
CN	11-01-11	FOR CONSTRUCTION
a	04-03-11	REVISED CLADDING
b	05-03-11	ALL CLADDING DRAWINGS REVISED TO REFLECT CHANGE IN CLADDING CHANNEL

LOT NUMBER:	LOT NUMBER
DRAWN BY:	Author
CHECKED BY:	Checker
COPYRIGHT:	VICTORIA UNIVERSITY

SHEET TITLE

CLADDING LAYOUT PLAN

A-591

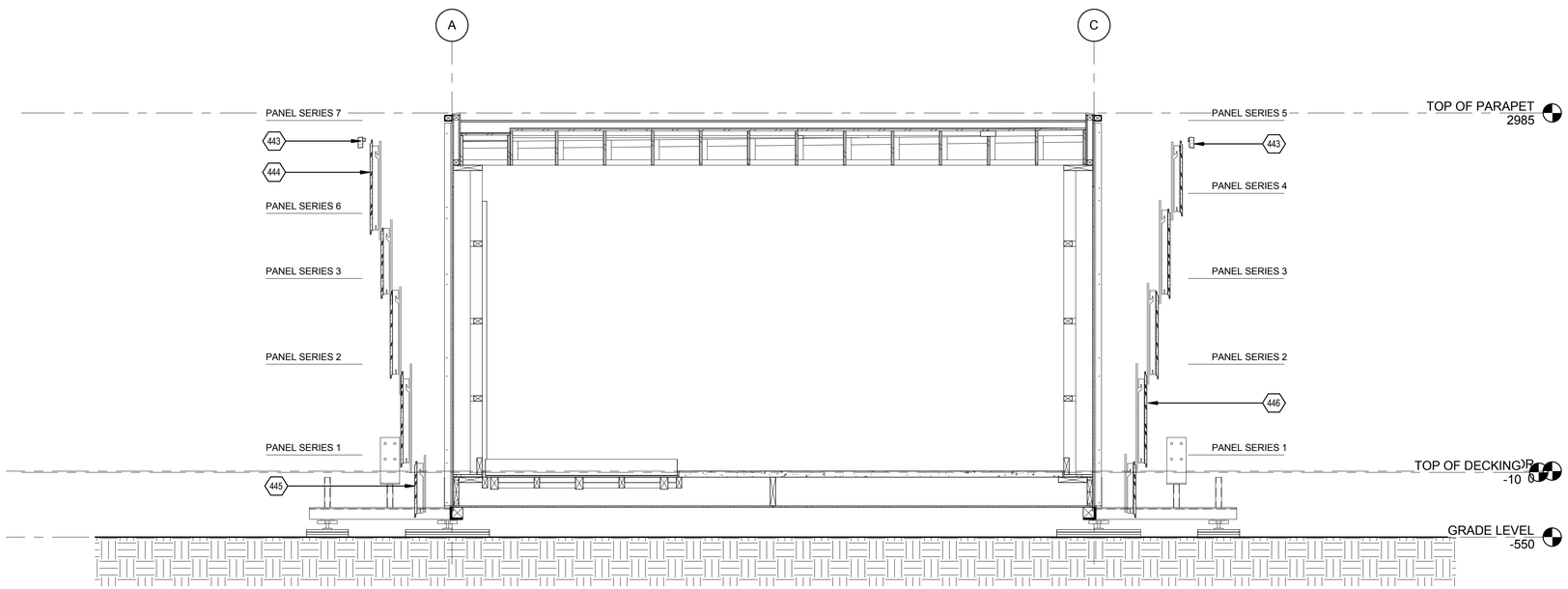

A1 CLADDING ASSEMBLY SECTION
1 : 24

0 1/2" 1' 1 1/2'

GENERAL SHEET NOTES

SHEET KEYNOTES

443	PARAPET COVERBOARD FIXED IN PLACE AFTER PANEL INSTALLATION TO SECURE TOP PANEL AND PREVENT UPLIFT. PARAPET FLASHING TO BE FIXED OVER COVERBOARD
444	NORTH EAST FACE OF BUILDING INCORPORATES PANEL SERIES 6 & 7 ON TOP TWO LAYERS TO ACCOMMODATE WINDOWS
445	CLADDING PANELS ASSEMBLED ON SITE FROM BOTTOM TO TOP, WITH EACH SUBSEQUENT PANEL PLACED OVER THE ONE BELOW, CREATING A SEAMLESS WEATHERBOARD CLADDING
446	PANEL SERIES 1 THROUGH 5 USED ON ALL WALLS EXCEPT NORTH EAST FACE

REFERENCE KEYNOTES

FIRST LIGHT NZ

TEAM NAME: FIRST LIGHT

ADDRESS: 139 VIVIAN STREET
TE ARO, WELLINGTON
NEWZEALAND

CONTACT: ELINUTTALL@GMAIL.COM
WWW.FIRSTLIGHTHOUSE.AC.NZ

CONSULTANTS

TENNENT + BROWN ARCHITECTS
DUNNING THORNTON CONSULTANTS LTD
LEAP AUSTRALASIA LTD
SOUTHERN PERSPECTIVES / SOLAR CITY

CLIENT

U.S. DEPARTMENT OF ENERGY
SOLAR DECATHLON 2011
WWW.SOLARDECATHLON.GOV

U.S. DEPARTMENT OF ENERGY SOLAR DECATHLON

MARK	DATE	DESCRIPTION
(CN	04-03-11	FOR CONSTRUCTION
b	05-03-11	ALL CLADDING DRAWINGS REVISED TO REFLECT CHANGE IN CLADDING CHANNEL

LOT NUMBER: LOT NUMBER
DRAWN BY: Author
CHECKED BY: Checker
COPYRIGHT:

SHEET TITLE

CLADDING ASSEMBLY SECTION

A-592

8/13/2011 8:26:45 AM

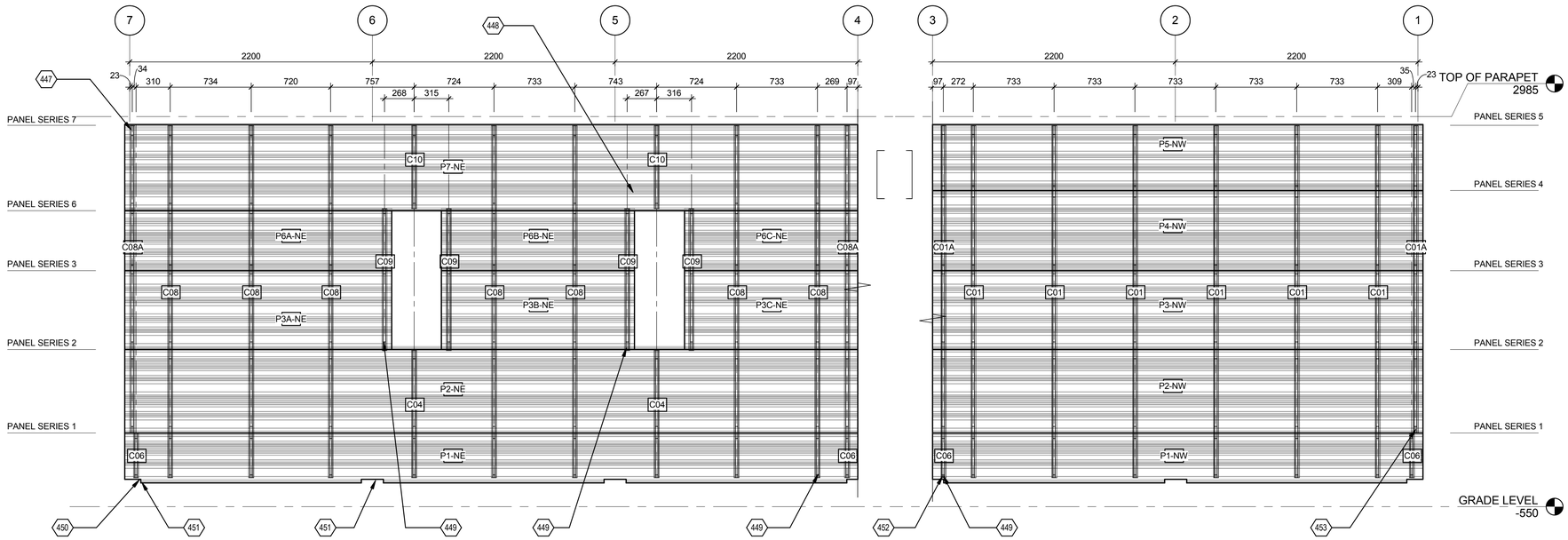

C1 CLADDING PANEL LAYOUT NORTH ELEVATION

1 : 24

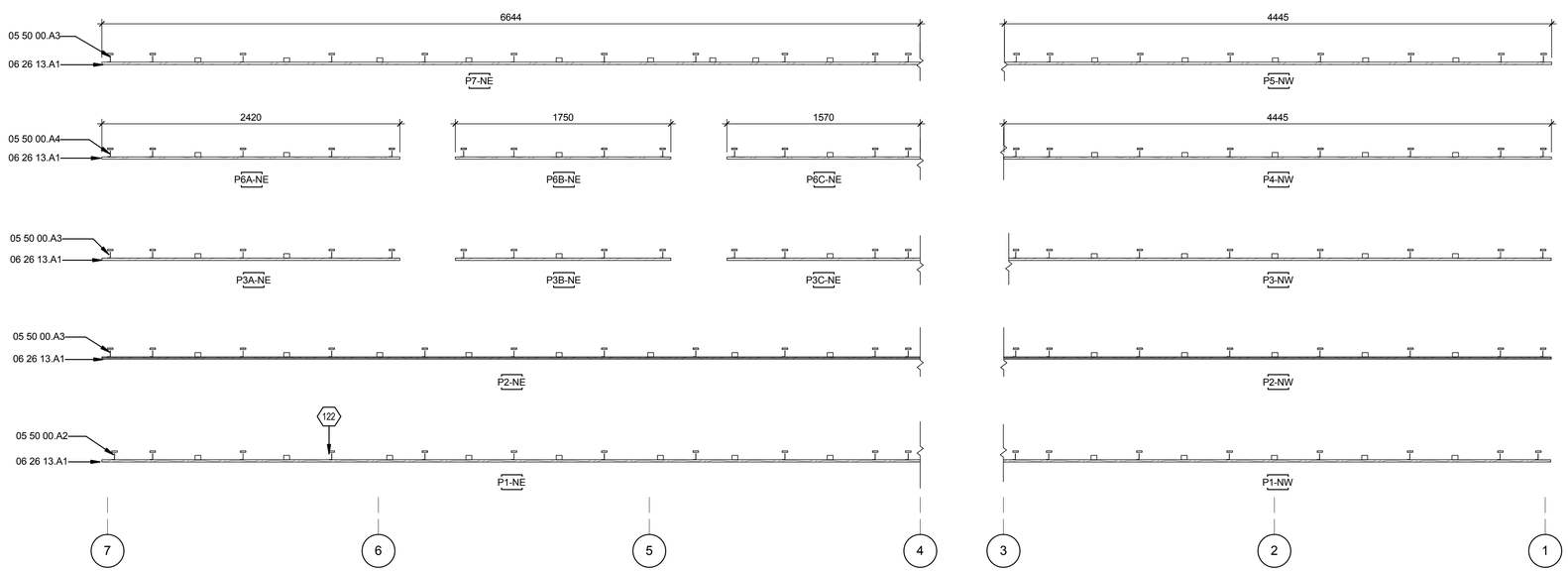

A1 CLADDING PANEL TYPE PLAN NORTH ELEVATION

1 : 24

GENERAL SHEET NOTES

CLADDING PANEL LENGTHS SPECIFIED TO ALLOW EXPANSION GAP AT BUILDING CORNERS & WINDOW EDGE

ALUMINIUM WALL CHANELS FIXED TO WALL STRUCTURE

REFERENCE KEYNOTES

05 50 00.A2	63.5X31.75X4.763MM UA ALUMINIUM CHANNEL
05 50 00.A3	50.8X34.92X3.175MM UA ALUMINIUM CHANNEL
05 50 00.A4	550MM ALUMINIUM PANEL BACKER
06 26 13.A1	PANELIZED REMOVABLE HORIZONTAL SHIPLAP CEDAR WEATHERBOARDS ON 60MM CAVITY, FIXED T 735MM MAX CRS TO ALUMINIUM CAVITY BATTENS.

SHEET KEYNOTES

122	ALL ALUMINIUM PANELS BACKERS TO LINE UP WITH WALL CHANELS
447	CENTRE OF ALUMINIUM WALL CHANNELS INDICATED BY DIMENSIONS FROM GRIDLINES
448	CENTRE SECTION OF C10 CHANNELS CUT ONSITE TO ALLOW FOR DOWNPIPES
449	THESE ALUMINIUM WALL CHANNELS HAVE PLASTIC LOCKING INSERTS INSTALLED ON ALL ALUMINIUM RODS
450	END CHANNEL OFFSET TO AVOID CONFLICT WITH FOUNDATION SYSTEM
451	BOTTOM WEATHER BOARD OF PANEL SERIES 1 NOTCHED AS REQUIRED TO FIT AROUND FOUNDATION SYSTEM
452	C06 ALUMINIUM WALL CHANNELS TO BE REMOVABLE TO FACILITATE MODULE ASSEMBLY
453	END CHANNEL OFFSET TO AVOID CONFLICT WITH FOUNDATION SYSTEM

FIRST LIGHT NZ

TEAM NAME:	FIRSTLIGHT NZ
ADDRESS:	139 VIVIAN STREET TE ARO, WELLINGTON NEWZEALAND
CONTACT:	INFO@FIRSTLIGHTHOUSE.AC.NZ WWW.FIRSTLIGHTHOUSE.AC.NZ

CONSULTANTS

TENNENT + BROWN ARCHITECTS

DUNNING THORNTON CONSULTANTS LTD

LEAP AUSTRALASIA LTD

SOUTHERN PERSPECTIVES / SOLAR CITY

CLIENT

U.S. DEPARTMENT OF ENERGY

SOLAR DECATHLON 2011

WWW.SOLARDECATHLON.GOV

U.S. DEPARTMENT OF ENERGY SOLAR DECATHLON

MARK	DATE	DESCRIPTION
CN	11-01-11	FOR CONSTRUCTION
a	04-03-11	REVISED CLADDING
b	05-03-11	ALL CLADDING DRAWINGS REVISED TO REFLECT CHANGE IN CLADDING CHANNEL

LOT NUMBER:	LOT NUMBER
DRAWN BY:	Author
CHECKED BY:	Checker
COPYRIGHT:	VICTORIA UNIVERSITY

SHEET TITLE

CLADDING PANEL LAYOUT NORTH ELEVATION

A-593

8/13/2011 8:26:53 AM

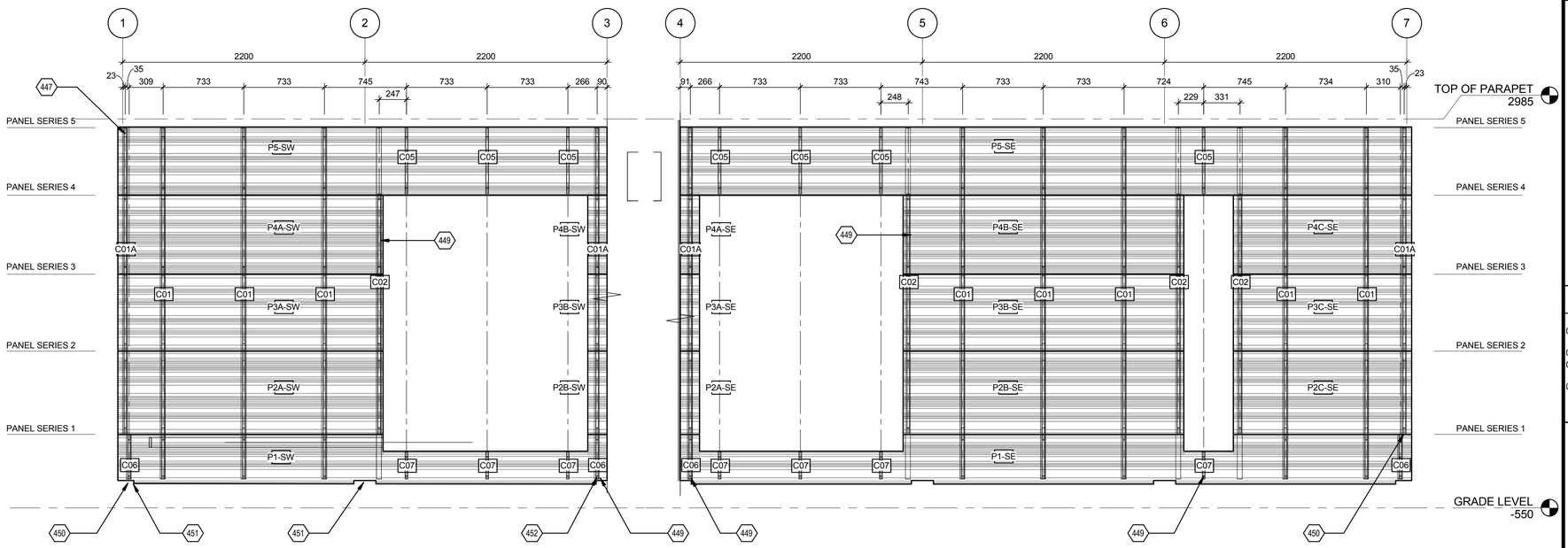

C1 CLADDING PANEL LAYOUT SOUTH ELEVATION

1 : 24

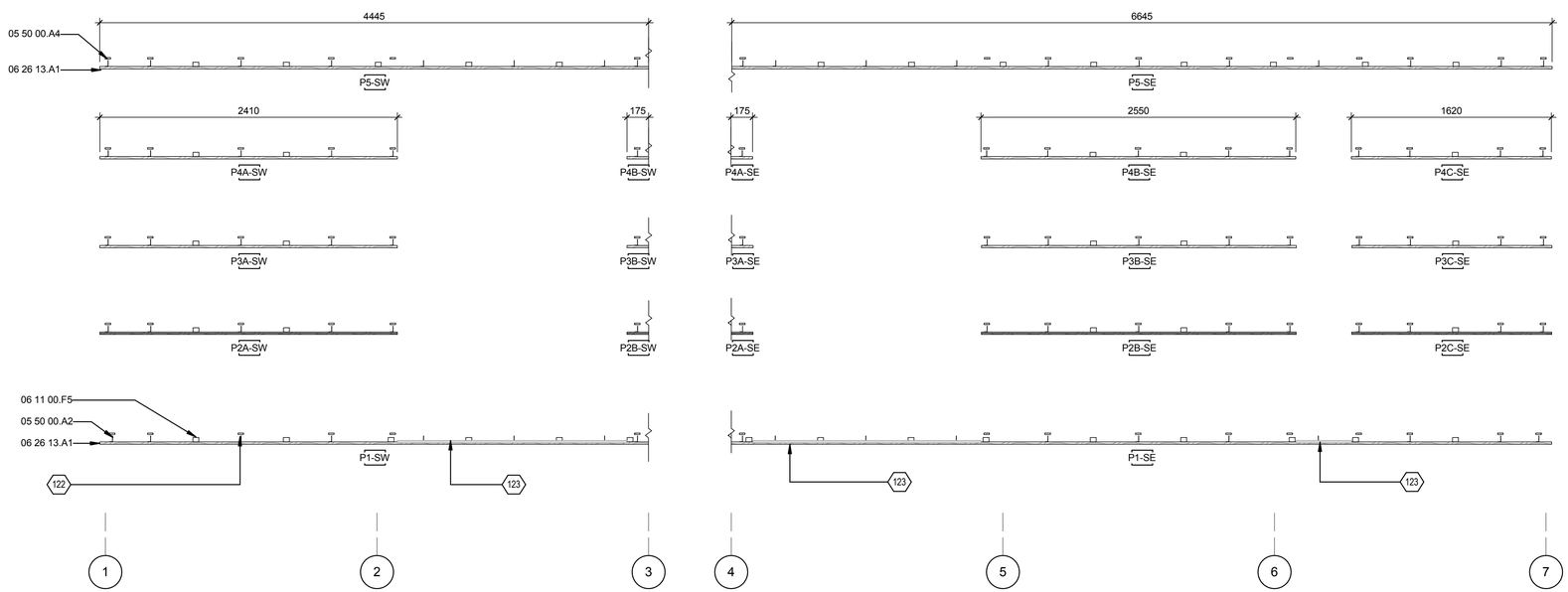

A1 CLADDING PANEL TYPE PLAN SOUTH ELEVATION

1 : 24

GENERAL SHEET NOTES

CLADDING PANEL LENGTHS SPECIFIED TO ALLOW EXPANSION GAP AT BUILDING CORNERS & WINDOW EDGE

ALUMINIUM WALL CHANELS FIXED TO WALL STRUCTURE

REFERENCE KEYNOTES

05 50 00.A2	63.5X31.75X4.763MM UA ALUMINIUM CHANNEL
05 50 00.A4	550MM ALUMINIUM PANEL BACKER
06 11 00.F5	35X25MM INTERMEDIATE TIMBER PANEL BACKER
06 26 13.A1	PANELIZED REMOVABLE HORIZONTAL SHIPLAP CEDAR WEATHERBOARDS ON 60MM CAVITY, FIXED T 735MM MAX CRS TO ALUMINIUM CAVITY BATTENS.

SHEET KEYNOTES

122	ALL ALUMINIUM PANELS BACKERS TO LINE UP WITH WALL CHANELS
123	TOP WEATHERBOARD REMOVED AT WINDOW EDGE. ALUMINIUM ANGLE REDUCED FROM 425MM TO 260MM IN GREYED SECTION
447	CENTRE OF ALUMINIUM WALL CHANNELS INDICATED BY DIMENSIONS FROM GRIDLINES
449	THESE ALUMINIUM WALL CHANNELS HAVE PLASTIC LOCKING INSERTS INSTALLED ON ALL ALUMINIUM RODS
450	END CHANNEL OFFSET TO AVOID CONFLICT WITH FOUNDATION SYSTEM
451	BOTTOM WEATHER BOARD OF PANEL SERIES 1 NOTCHED AS REQUIRED TO FIT AROUND FOUNDATION SYSTEM
452	C06 ALUMINIUM WALL CHANNELS TO BE REMOVABLE TO FACILITATE MODULE ASSEMBLY

FIRST LIGHT NZ

TEAM NAME:	FIRSTLIGHT NZ
ADDRESS:	139 VIVIAN STREET TE ARO, WELLINGTON NEWZEALAND
CONTACT:	INFO@FIRSTLIGHTHOUSE.AC.NZ WWW.FIRSTLIGHTHOUSE.AC.NZ

CONSULTANTS

TENNENT + BROWN ARCHITECTS

DUNNING THORNTON CONSULTANTS LTD

LEAP AUSTRALASIA LTD

SOUTHERN PERSPECTIVES / SOLAR CITY

CLIENT

U.S. DEPARTMENT OF ENERGY

SOLAR DECATHLON 2011

WWW.SOLARDECATHLON.GOV

U.S. DEPARTMENT OF ENERGY SOLAR DECATHLON

MARK	DATE	DESCRIPTION
CN	11-01-11	FOR CONSTRUCTION
a	04-03-11	REVISED CLADDING
b	05-03-11	ALL CLADDING DRAWINGS REVISED TO REFLECT CHANGE IN CLADDING CHANNEL

LOT NUMBER:	LOT NUMBER
DRAWN BY:	Author
CHECKED BY:	Checker
COPYRIGHT:	VICTORIA UNIVERSITY

SHEET TITLE

CLADDING PANEL LAYOUT SOUTH ELEVATION

A-594

8/13/2011 8:27:00 AM

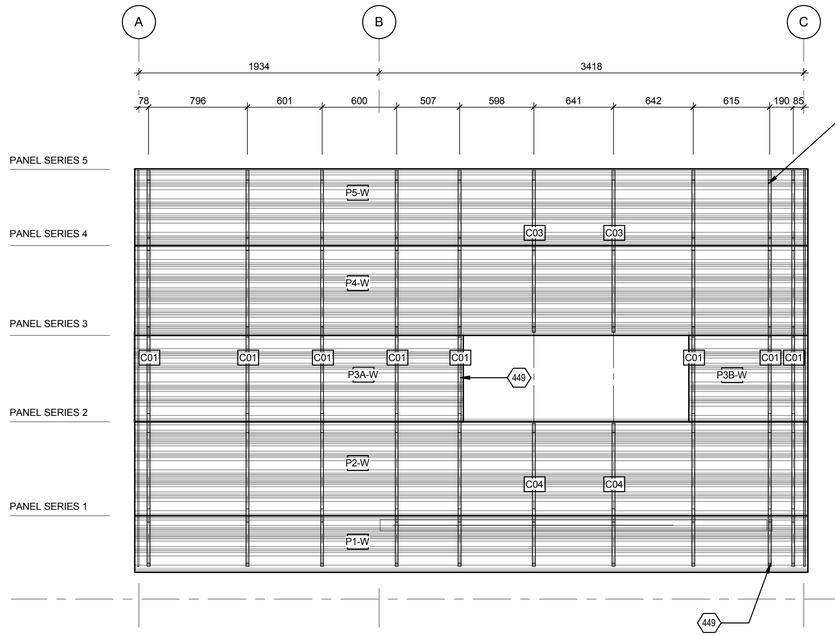

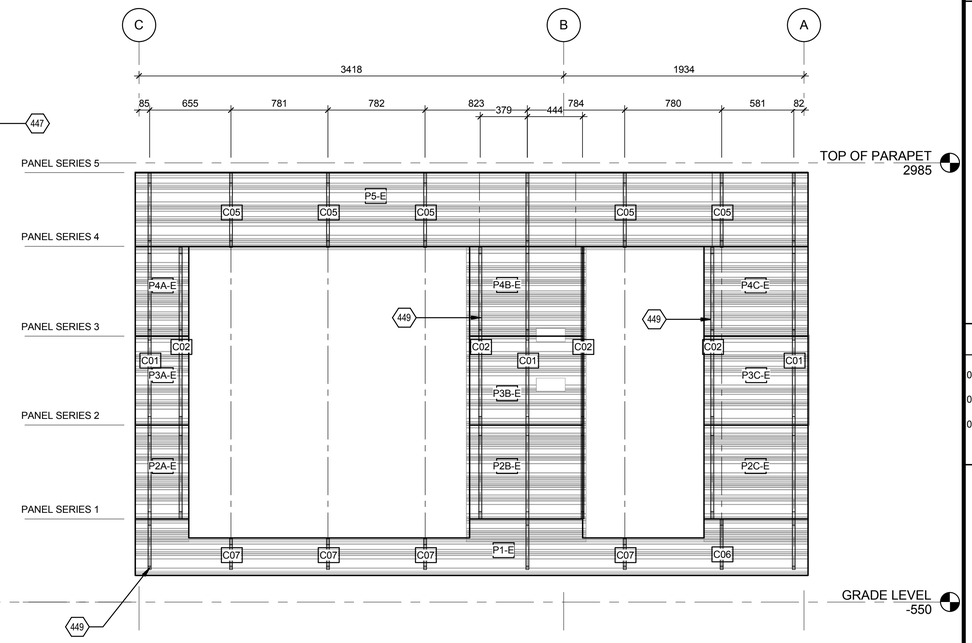

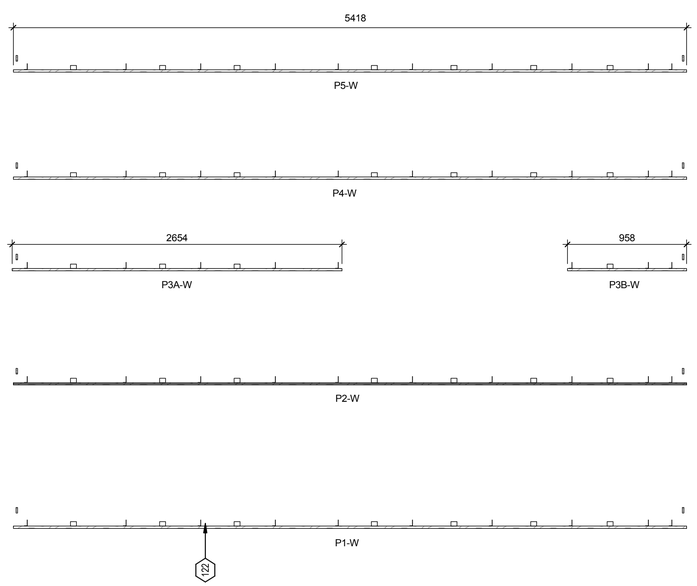

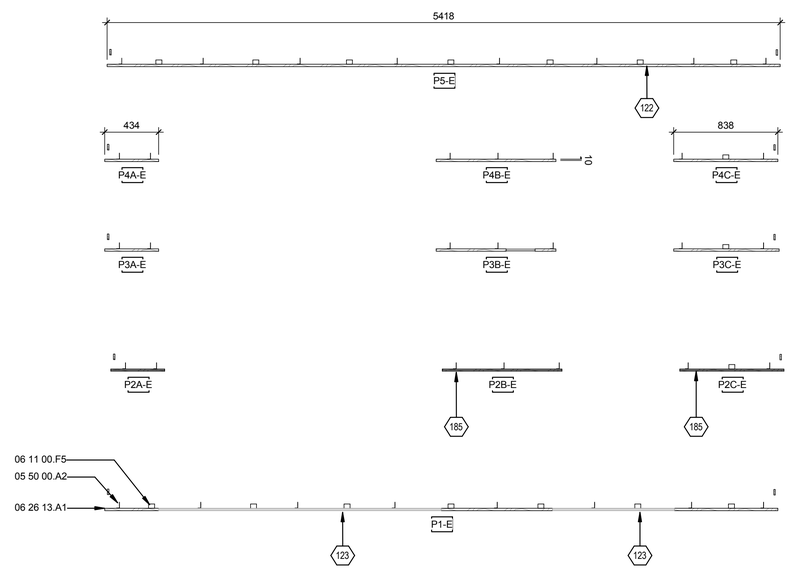

A1 CLADDING PANEL LAYOUT WEST ELEVATION

1 : 24

0 1' 2' 4'

A4 CLADDING PANEL LAYOUT EAST ELEVATION

1 : 24

0 1' 2' 4'

GENERAL SHEET NOTES

CLADDING PANEL LENGTHS SPECIFIED TO ALLOW EXPANSION GAP AT BUILDING CORNERS & WINDOW EDGE

ALUMINIUM WALL CHANELS FIXED TO WALL STRUCTURE

REFERENCE KEYNOTES

05 50 00.A2	63.5X31.75X4.763MM UA ALUMINIUM CHANNEL
06 11 00.F5	35X25MM INTERMEDIATE TIMBER PANEL BACKER
06 26 13.A1	PANELIZED REMOVABLE HORIZONTAL SHIPLAP CEDAR WEATHERBOARDS ON 60MM CAVITY, FIXED T 735MM MAX CRS TO ALUMINIUM CAVITY BATTENS.

SHEET KEYNOTES

122	ALL ALUMINIUM PANELS BACKERS TO LINE UP WITH WALL CHANELS
123	TOP WEATHERBOARD REMOVED AT WINDOW EDGE. ALUMINIUM ANGLE REDUCED FROM 425MM TO 260MM IN GREYED SECTION
185	TOP TWO WEATHERBOARDS REMOVED AT WINDOW EDGE. ALUMINIUM ANGLE REDUCED FROM 425MM TO 260MM IN GREYED SECTION
447	CENTRE OF ALUMINIUM WALL CHANNELS INDICATED BY DIMENSIONS FROM GRIDLINES
449	THESE ALUMINIUM WALL CHANNELS HAVE PLASTIC LOCKING INSERTS INSTALLED ON ALL ALUMINIUM RODS

FIRST LIGHT NZ

TEAM NAME:	FIRSTLIGHT NZ
ADDRESS:	139 VIVIAN STREET TE ARO, WELLINGTON NEWZEALAND
CONTACT:	INFO@FIRSTLIGHTHOUSE.AC.NZ WWW.FIRSTLIGHTHOUSE.AC.NZ

CONSULTANTS

TENNENT + BROWN ARCHITECTS

DUNNING THORNTON CONSULTANTS LTD

LEAP AUSTRALASIA LTD

SOUTHERN PERSPECTIVES / SOLAR CITY

CLIENT

U.S. DEPARTMENT OF ENERGY

SOLAR DECATHLON 2011

WWW.SOLARDECATHLON.GOV

U.S. DEPARTMENT OF ENERGY SOLAR DECATHLON

MARK	DATE	DESCRIPTION
CN	11-01-11	FOR CONSTRUCTION
a	04-03-11	REVISED CLADDING
b	05-03-11	ALL CLADDING DRAWINGS REVISED TO REFLECT CHANGE IN CLADDING CHANNEL

LOT NUMBER:	LOT NUMBER
DRAWN BY:	Author
CHECKED BY:	Checker
COPYRIGHT:	VICTORIA UNIVERSITY

SHEET TITLE

CLADDING PANEL LAYOUT EAST & WEST ELEVATIONS

A-595

8/13/2011 8:27:08 AM

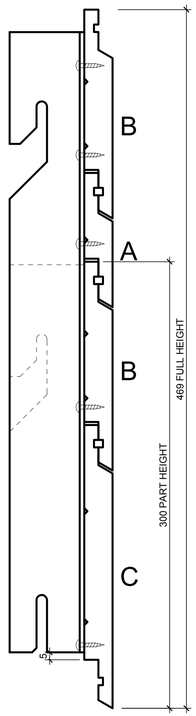

PANEL SERIES 1

P1-SW
P1-SE
P1-E
P1-NE
P1-NW
P1-W

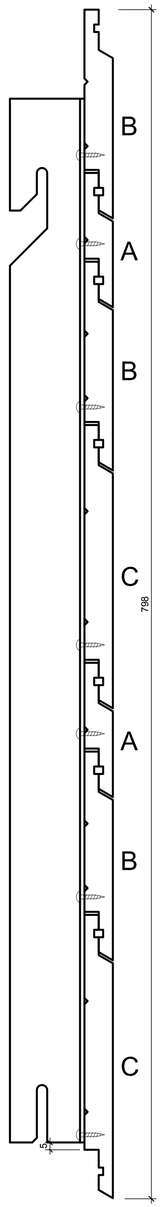

PANEL SERIES 2

P2A-SW
P2B-SW
P2A-SE
P2B-SE
P2C-SE
P2A-E
P2B-E
P2C-E
P2-NE

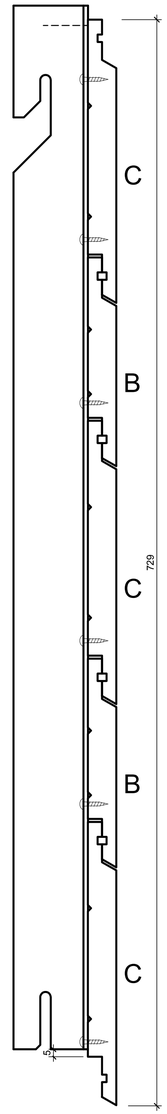

PANEL SERIES 3

P3A-SW
P3B-SW
P3A-SE
P3B-SE
P3C-SE
P3A-E
P3B-E
P3C-E
P3A-NE
P3B-NE
P3C-NE
P3-NW
P3A-W
P3B-W

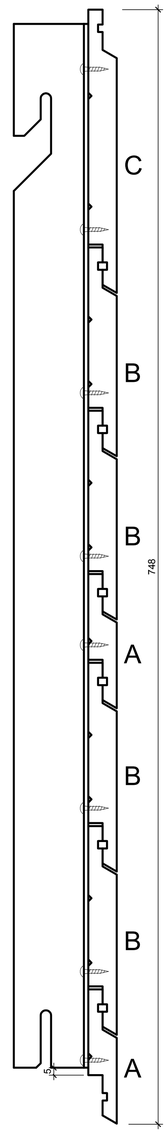

PANEL SERIES 4

P4A-SW
P4B-SW
P4A-SE
P4B-SE
P4C-SE
P4A-E
P4B-E
P4-NW
P4-W

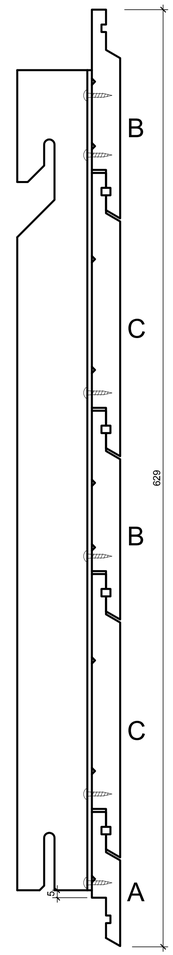

PANEL SERIES 5

P5-SW
P5-SE
P5-E
P5-NW
P5-W

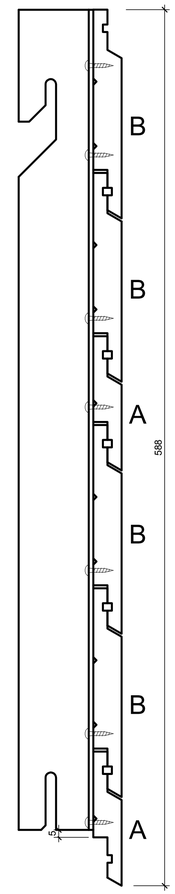

PANEL SERIES 6

P6A-NE
P6B-NE
P6C-NE

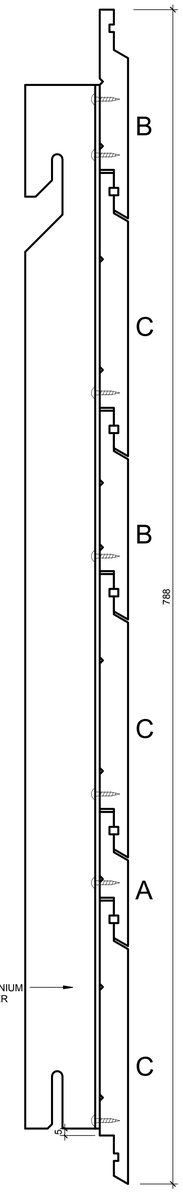

PANEL SERIES 7

P7-NE

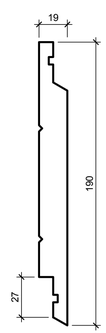

WEATHERBOARD TYPE C

-HERMAN PACIFIC CP836

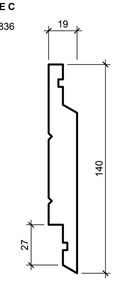

WEATHERBOARD TYPE B

-HERMAN PACIFIC CP835

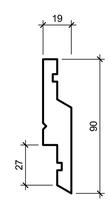

WEATHERBOARD TYPE A

-HERMAN PACIFIC CP837

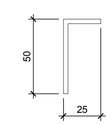

PANEL BACKER
ANGLE (UA 1109)

ALUMINIUM BACKER

CLADDING PANEL CONSTRUCTION & WEATHERBOARD PROFILES

A1

1 : 2

GENERAL SHEET NOTES

REFERENCE KEYNOTES

SHEET KEYNOTES

FIRST LIGHT NZ

TEAM NAME:	FIRSTLIGHT NZ
ADDRESS:	139 VIVIAN STREET TE ARO, WELLINGTON NEWZEALAND
CONTACT:	INFO@FIRSTLIGHTHOUSE.AC.NZ WWW.FIRSTLIGHTHOUSE.AC.NZ

CONSULTANTS

TENNENT + BROWN ARCHITECTS
DUNNING THORNTON CONSULTANTS LTD
LEAP AUSTRALASIA LTD
SOUTHERN PERSPECTIVES / SOLAR CITY

CLIENT

U.S. DEPARTMENT OF ENERGY
SOLAR DECATHLON 2011
WWW.SOLARDECATHLON.GOV

U.S. DEPARTMENT OF ENERGY SOLAR DECATHLON

MARK	DATE	DESCRIPTION
CN	11-01-11	FOR CONSTRUCTION
a	04-03-11	REVISED CLADDING
b	05-03-11	ALL CLADDING DRAWINGS REVISED TO REFLECT CHANGE IN CLADDING CHANNEL

LOT NUMBER:	LOT NUMBER
DRAWN BY:	Author
CHECKED BY:	Checker
COPYRIGHT:	VICTORIA UNIVERSITY

SHEET TITLE

CLADDING PANEL DETAILS

A-596

8/13/2011 8:27:12 AM

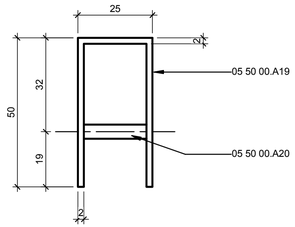

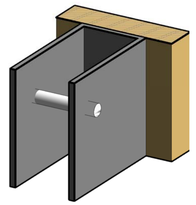

D1 CLADDING WALL CHANNEL
1 : 1

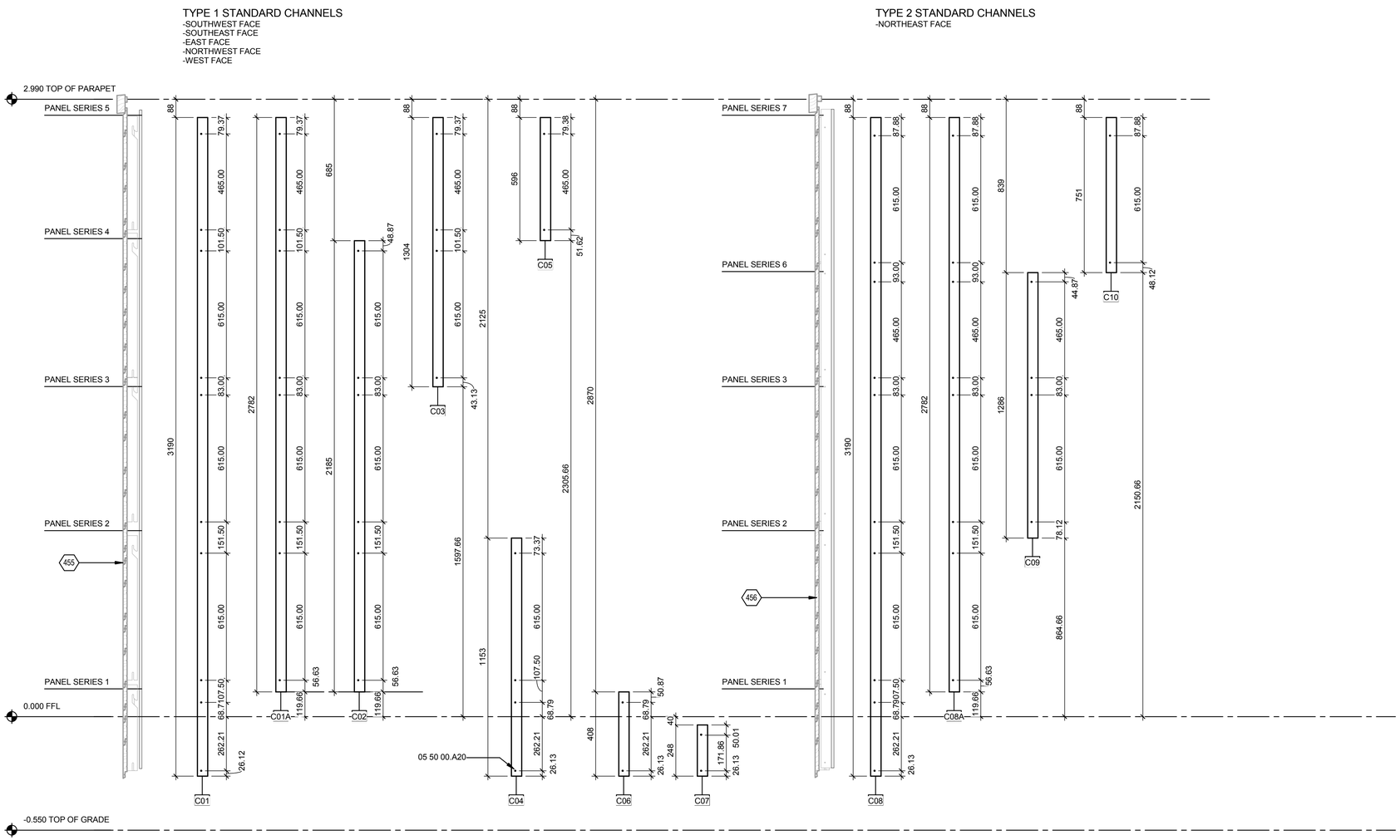

A1 CLADDING WALL CHANNELS
1 : 12

0 1' 2' 4'

GENERAL SHEET NOTES

REFERENCE KEYNOTES

05 50 00.A19	ALUMINIUM CHANNEL 25 X 50 X 2MM WITH HOLES DRILLED THROUGH FLANGES FOR ALUMINIUM ROD
05 50 00.A20	ALUMINIUM ROD 4.76MM DIA, GLUE FIXED THROUGH CHANNEL FLANGES AT INDICATED CENTRES

SHEET KEYNOTES

455	SOUTH EAST FACE CLADDING PANELS SHOWN GREYED
456	NORTH EAST FACE CLADDING PANELS SHOWN GREYED

FIRST LIGHT NZ

TEAM NAME:	FIRSTLIGHT NZ
ADDRESS:	139 VIVIAN STREET TE ARO, WELLINGTON NEWZEALAND
CONTACT:	INFO@FIRSTLIGHTHOUSE.AC.NZ WWW.FIRSTLIGHTHOUSE.AC.NZ

CONSULTANTS

TENNENT + BROWN ARCHITECTS
DUNNING THORNTON CONSULTANTS LTD
LEAP AUSTRALASIA LTD
SOUTHERN PERSPECTIVES / SOLAR CITY

CLIENT
U.S. DEPARTMENT OF ENERGY
SOLAR DECATHLON 2011
WWW.SOLARDECATHLON.GOV

U.S. DEPARTMENT OF ENERGY SOLAR DECATHLON

MARK	DATE	DESCRIPTION
CN	11-01-11	FOR CONSTRUCTION
a	04-03-11	REVISED CLADDING
b	05-03-11	ALL CLADDING DRAWINGS REVISED TO REFLECT CHANGE IN CLADDING CHANNEL

LOT NUMBER:	LOT NUMBER
DRAWN BY:	Author
CHECKED BY:	Checker
COPYRIGHT:	VICTORIA UNIVERSITY

SHEET TITLE
CLADDING WALL CHANNELS

A-597

8/13/2011 8:27:23 AM

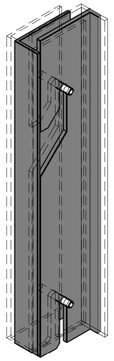

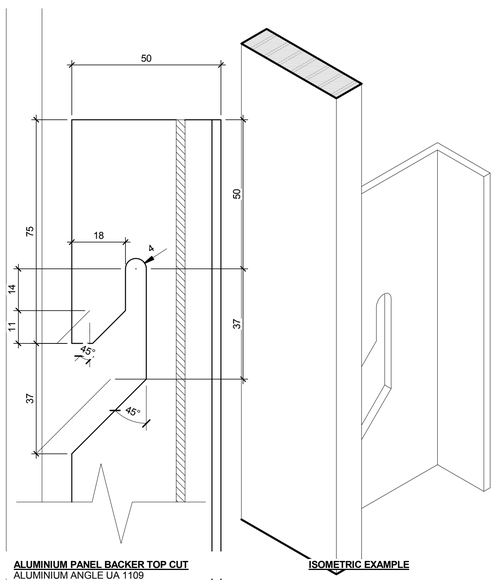

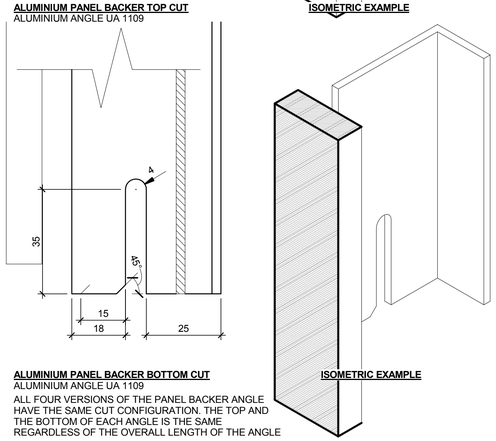

A1 CLADDING PANEL ANGLE
1 : 1

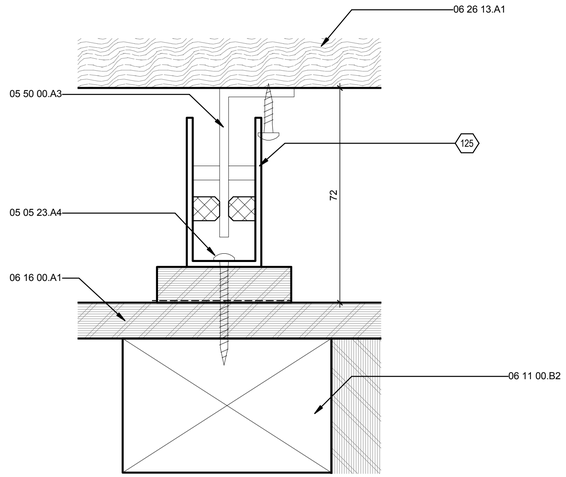

D3 LOCKING CHANNEL - PLAN
1 : 1

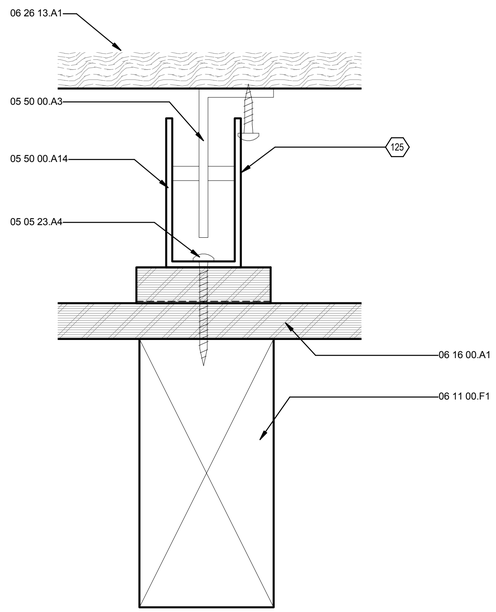

A3 STANDARD CHANNEL - PLAN
1 : 1

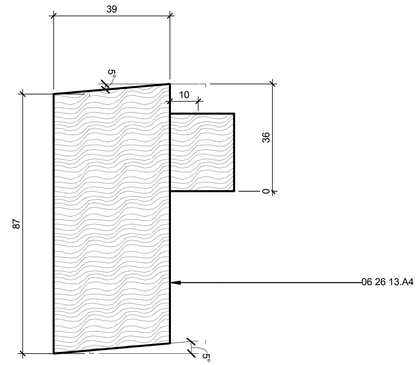

D5 PARAPET COVERBOARD - SECTION
1 : 1

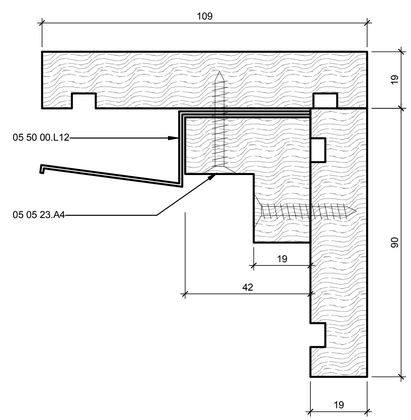

A5 CORNER COVERBOARD - PLAN
1 : 1

GENERAL SHEET NOTES

REFERENCE KEYNOTES

05 05 23.A4	1 NO. 10MM DIAMETER X 220MM SPAX SCREW - CSK HEAD
05 50 00.A3	50.8X34.92X3.175MM UA ALUMINIUM CHANNEL
05 50 00.A14	CLADDING WALL CHANNEL TYPE C08
05 50 00.L12	STEEL SPRING CLIP FOR SECURING TO CLADDING
06 11 00.B2	70X45MM TIMBER STUD
06 11 00.F1	90X45MM TIMBER WALL STUD
06 16 00.A1	12MM PLYWOOD BRACING SHEETS LAID VERTICALLY
06 26 13.A1	PANELIZED REMOVABLE HORIZONTAL SHIPLAP CEDAR WEATHERBOARDS ON 60MM CAVITY, FIXED T 735MM MAX CRS TO ALUMINIUM CAVITY BATTENS.
06 26 13.A4	PARAPET COVERBOARD

SHEET KEYNOTES

125	ALL CHANNELS FIXED TO WALL STRUCTURE

FIRST LIGHT NZ

TEAM NAME:	FIRSTLIGHT NZ
ADDRESS:	139 VIVIAN STREET TE ARO, WELLINGTON NEWZEALAND
CONTACT:	INFO@FIRSTLIGHTHOUSE.AC.NZ WWW.FIRSTLIGHTHOUSE.AC.NZ

CONSULTANTS

TENNENT + BROWN ARCHITECTS

DUNNING THORNTON CONSULTANTS LTD

LEAP AUSTRALASIA LTD

SOUTHERN PERSPECTIVES / SOLAR CITY

CLIENT

U.S. DEPARTMENT OF ENERGY

SOLAR DECATHLON 2011

WWW.SOLARDECATHLON.GOV

U.S. DEPARTMENT OF ENERGY SOLAR DECATHLON

MARK	DATE	DESCRIPTION
CN	11-01-11	FOR CONSTRUCTION
a	04-03-11	REVISED CLADDING
b	05-03-11	ALL CLADDING DRAWINGS REVISED TO REFLECT CHANGE IN CLADDING CHANNEL

LOT NUMBER:	LOT NUMBER
DRAWN BY:	Author
CHECKED BY:	Checker
COPYRIGHT:	VICTORIA UNIVERSITY

SHEET TITLE

CLADDING COMPONENT DETAILS

A-598

8/13/2011 8:27:36 AM

A1 EXTERIOR VIEW

8/13/2011 8:27:40 AM

FIRST LIGHT NZ

TEAM NAME:	FIRSTLIGHT NZ
ADDRESS:	139 VIVIAN STREET TE ARO, WELLINGTON NEWZEALAND
CONTACT:	INFO@FIRSTLIGHTHOUSE.AC.NZ WWW.FIRSTLIGHTHOUSE.AC.NZ

CONSULTANTS

TENNENT + BROWN ARCHITECTS
DUNNING THORNTON CONSULTANTS LTD
LEAP AUSTRALASIA LTD
SOUTHERN PERSPECTIVES / SOLAR CITY

CLIENT

U.S. DEPARTMENT OF ENERGY
SOLAR DECATHLON 2011
WWW.SOLARDECATHLON.GOV

U.S. DEPARTMENT OF ENERGY SOLAR DECATHLON

MARK	DATE	DESCRIPTION
CN	11-01-11	FOR CONSTRUCTION

LOT NUMBER:	LOT NUMBER
DRAWN BY:	AUTHOR
CHECKED BY:	CHECKER
COPYRIGHT:	VICTORIA UNIVERSITY

SHEET TITLE

ARCHITECTURAL RENDERINGS

A-901

D1 VIEW OF KITCHEN & DINING ROOM

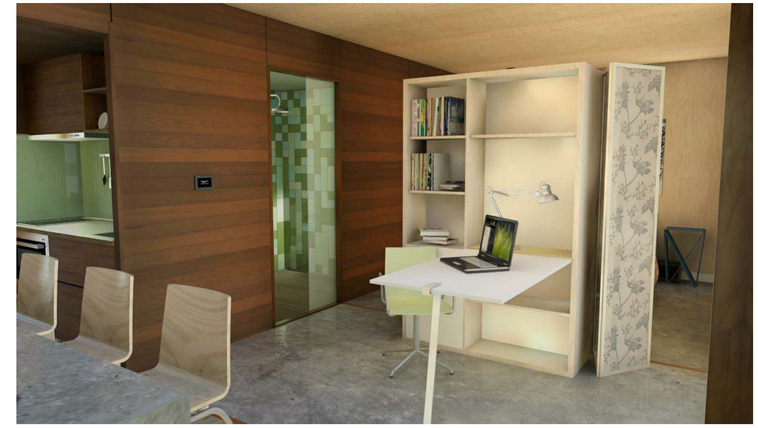

D5 VIEW OF STUDY UNIT

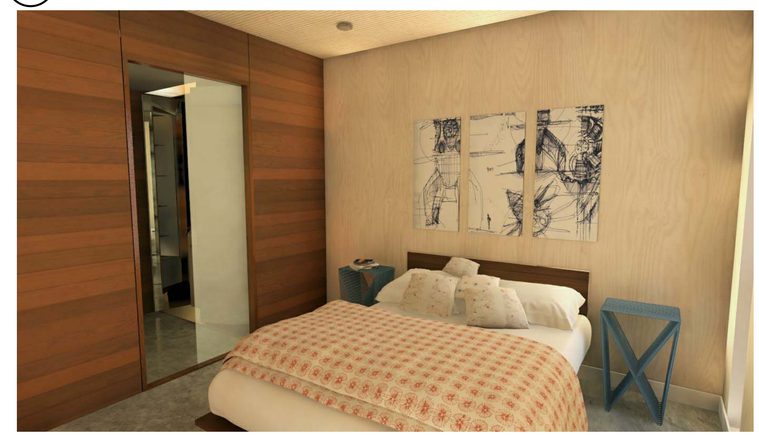

B5 VIEW OF BEDROOM

A1 VIEW OF BATHROOM

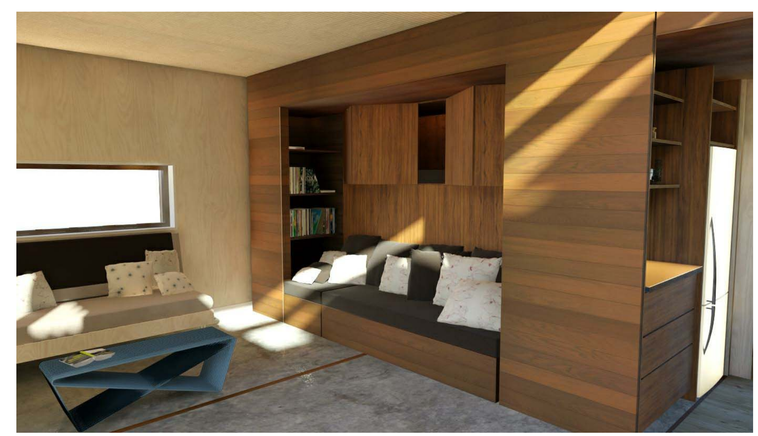

A5 VIEW OF LOUNGE JOINERY UNIT

8/13/2011 8:27:44 AM

FIRST LIGHT NZ

TEAM NAME:	FIRSTLIGHT NZ
ADDRESS:	139 VIVIAN STREET TE ARO, WELLINGTON NEWZEALAND
CONTACT:	INFO@FIRSTLIGHTHOUSE.AC.NZ WWW.FIRSTLIGHTHOUSE.AC.NZ

CONSULTANTS

TENNENT + BROWN ARCHITECTS
DUNNING THORNTON CONSULTANTS LTD
LEAP AUSTRALASIA LTD
SOUTHERN PERSPECTIVES / SOLAR CITY

CLIENT

U.S. DEPARTMENT OF ENERGY
SOLAR DECATHLON 2011
WWW.SOLARDECATHLON.GOV

U.S. DEPARTMENT OF ENERGY SOLAR DECATHLON

MARK	DATE	DESCRIPTION
CN	11-01-11	FOR CONSTRUCTION

LOT NUMBER:	LOT NUMBER
DRAWN BY:	AUTHOR
CHECKED BY:	CHECKER
COPYRIGHT:	VICTORIA UNIVERSITY

SHEET TITLE

ARCHITECTURAL RENDERINGS

A-902

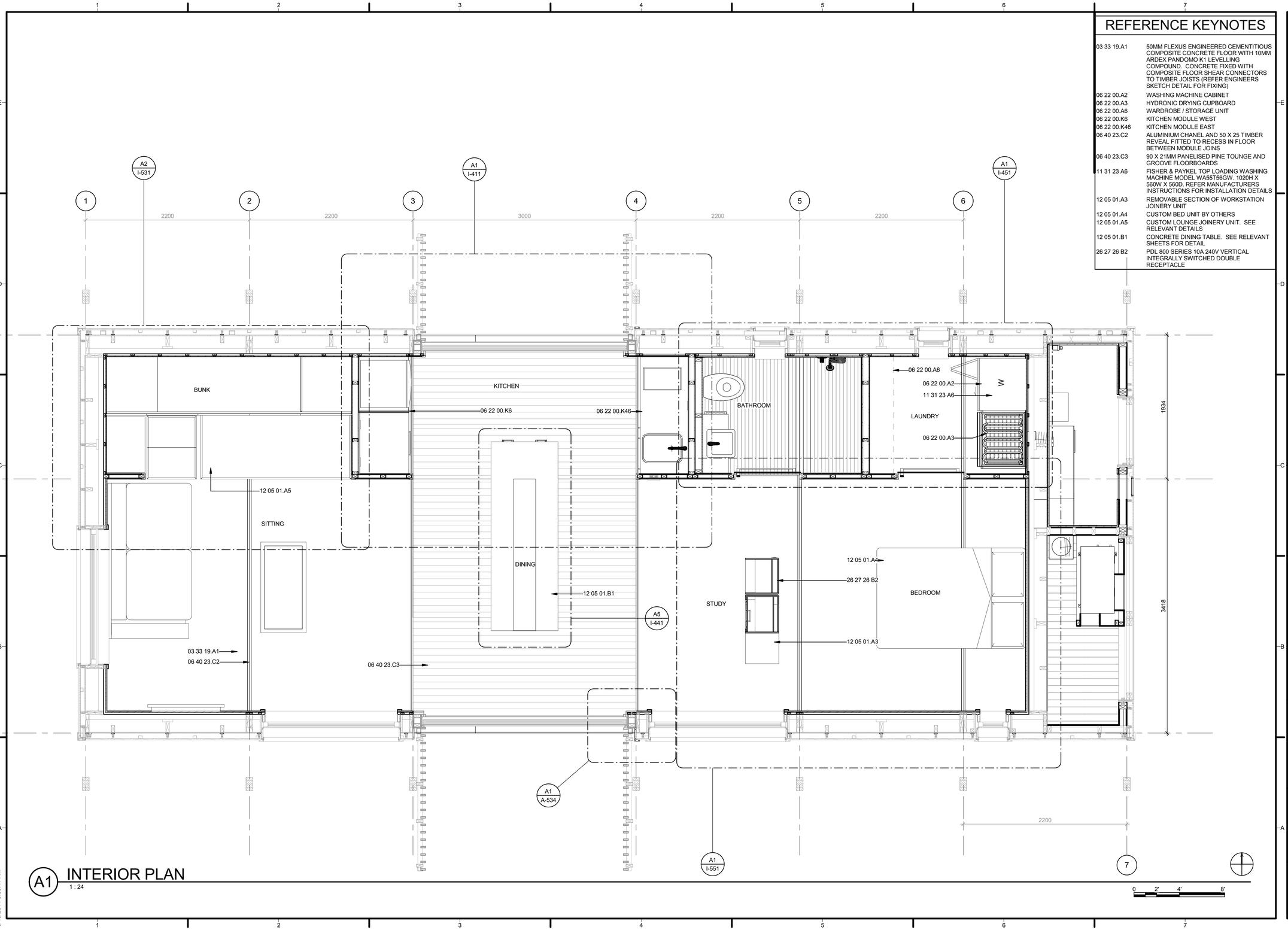

A1 INTERIOR PLAN
1 : 24

REFERENCE KEYNOTES

03 33 19.A1	50MM FLEXUS ENGINEERED CEMENTITIOUS COMPOSITE CONCRETE FLOOR WITH 10MM ARDEX PANDOMO K1 LEVELLING COMPOUND. CONCRETE FIXED WITH COMPOSITE FLOOR SHEAR CONNECTORS TO TIMBER JOISTS (REFER ENGINEERS SKETCH DETAIL FOR FIXING)
06 22 00.A2	WASHING MACHINE CABINET
06 22 00.A3	HYDRONIC DRYING CUPBOARD
06 22 00.A6	WARDROBE / STORAGE UNIT
06 22 00.K6	KITCHEN MODULE WEST
06 22 00.K46	KITCHEN MODULE EAST
06 40 23.C2	ALUMINIUM CHANEL AND 50 X 25 TIMBER REVEAL FITTED TO RECESS IN FLOOR BETWEEN MODULE JOINS
06 40 23.C3	90 X 21MM PANELISED PINE TOUNGE AND GROOVE FLOORBOARDS
11 31 23 A6	FISHER & PAYKEL TOP LOADING WASHING MACHINE MODEL WA55T56GW. 1020H X 560W X 560D. REFER MANUFACTURERS INSTRUCTIONS FOR INSTALLATION DETAILS
12 05 01.A3	REMOVABLE SECTION OF WORKSTATION JOINERY UNIT
12 05 01.A4	CUSTOM BED UNIT BY OTHERS
12 05 01.A5	CUSTOM LOUNGE JOINERY UNIT. SEE RELEVANT DETAILS
12 05 01.B1	CONCRETE DINING TABLE. SEE RELEVANT SHEETS FOR DETAIL
26 27 26 B2	PDL 800 SERIES 10A 240V VERTICAL INTEGRALLY SWITCHED DOUBLE RECEPTACLE

FIRST LIGHT NZ

TEAM NAME:	FIRSTLIGHT NZ
ADDRESS:	139 VIVIAN STREET TE ARO, WELLINGTON NEWZEALAND
CONTACT:	INFO@FIRSTLIGHTHOUSE.AC.NZ WWW.FIRSTLIGHTHOUSE.AC.NZ

CONSULTANTS

TENNENT + BROWN ARCHITECTS
DUNNING THORNTON CONSULTANTS LTD
LEAP AUSTRALASIA LTD
SOUTHERN PERSPECTIVES / SOLAR CITY

CLIENT

U.S. DEPARTMENT OF ENERGY
SOLAR DECATHLON 2011
WWW.SOLARDECATHLON.GOV

U.S. DEPARTMENT OF ENERGY SOLAR DECATHLON

MARK	DATE	DESCRIPTION
CN	11-01-11	FOR CONSTRUCTION

LOT NUMBER:	LOT NUMBER
DRAWN BY:	AUTHOR
CHECKED BY:	Checker
COPYRIGHT:	VICTORIA UNIVERSITY

SHEET TITLE

INTERIOR DESIGN PLAN

I-101

8/13/2011 8:33:41 AM

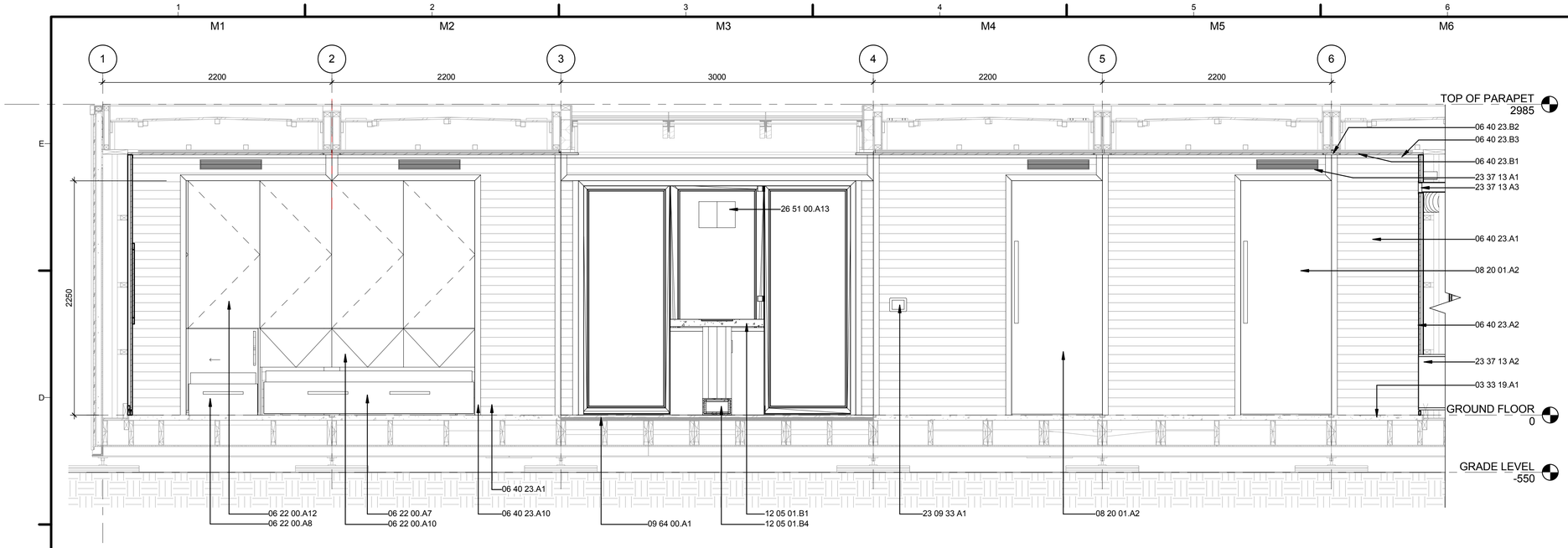

C1 INTERIOR ELEVATION - NORTH
1 : 24

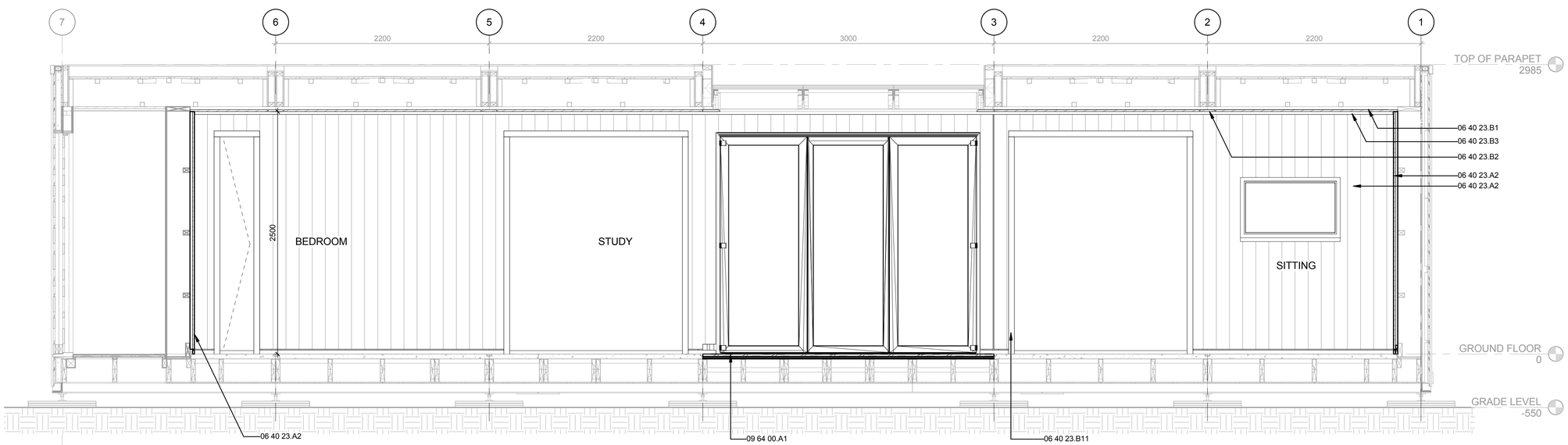

A1 INTERIOR ELEVATION - SOUTH
1 : 24

REFERENCE KEYNOTES

03 33 19.A1	50MM FLEXUS ENGINEERED CEMENTITIOUS COMPOSITE CONCRETE FLOOR WITH 10MM ARDEX PANDOMO K1 LEVELLING COMPOUND. CONCRETE FIXED WITH COMPOSITE FLOOR SHEAR CONNECTORS TO TIMBER JOISTS (REFER ENGINEERS SKETCH DETAIL FOR FIXING)
06 22 00.A7	LIVING ROOM JOINERY - DOUBLE SOFA BED
06 22 00.A8	LIVING ROOM JOINERY - OTTOMAN
06 22 00.A10	LIVING ROOM JOINERY - BUNK BED. PLATFORM ALSO ACTS AS KIDS' TV VIEWING PLATFORM WHEN BIFOLD DOORS ARE OPEN
06 22 00.A12	LIVING ROOM JOINERY - BIFOLD DOORS. TRACK GEAR FIXED ON-SITE. BOTTOM TRACK FIXED TO BUNK SHELVING UNIT, TOP TRACK TO CEILING.
06 40 23.A1	83X12MM HORIZONTAL TONGUE & GROOVE RIMU TIMBER BOARD INTERIOR LINNING.
06 40 23.A2	135X19MM WHITEWASHED TONGUE & GROOVE PROFILE VERTICAL TIMBER BOARD ON 45X25 TIMBER BATTENS
06 40 23.A10	EX 57X18MM INTERIOR TIMBER TRIM TO OPENINGS
06 40 23.B1	135X19MM WHITEWASHED TONGUE & GROOVE PROFILE PINE TIMBER BOARD TO CEILING ALIGNED TO DIRECTION INDICATED
06 40 23.B2	150 X 19MM REMOVABLE WHITEWASHED TIMBER BOARD TO MODULE JOINS
06 40 23.B3	30X6 TIMBER TRIM TO WALL CEILING JUNCTION
06 40 23.B11	60 X 19 WHITEWASHED PINE ARCHITRAVES TO WINDOWS IN LIVING SPACES
08 20 01.A2	10MM TOP HUNG FLOOR TO CEILING TOUGHENED GLASS FACE-SLIDER. ACID ETCHED ON SOUTH FACE. DORMA AGILE 150 SLIDING DOOR SYSTEM
09 64 00.A1	3M X 1.3M PANELISED 20 X 140MM TIMBER FLOORING ON 12MM PLYWOOD (PLY = 200MM WIDE AT 400MM CENTRES) AND TIMBER PACKERS
12 05 01.B1	CONCRETE DINING TABLE. SEE RELEVANT SHEETS FOR DETAIL
12 05 01.B4	18MM PLYWOOD FRAMED LEG TO CONCRETE TABLE
23 09 33 A1	SCHNEIDER ELECTRIC MAGELIS HMI CONTROLLER
23 37 13 A1	600 X 600MM SUPPLY AIR LINEAR DIFFUSERS
23 37 13 A2	350 X 500MM RETURN AIR EGGCRATE GRILLE
23 37 13 A3	350 X 100MM RETURN AIR EGGCRATE GRILLE
26 51 00.A13	FEATURE PENDANT LIGHTING FIXTURE OVER DINING ROOM TABLE

SHEET KEYNOTES

FIRST LIGHT NZ

TEAM NAME:	FIRSTLIGHT NZ
ADDRESS:	139 VIVIAN STREET TE ARO, WELLINGTON NEWZEALAND
CONTACT:	INFO@FIRSTLIGHTHOUSE.AC.NZ WWW.FIRSTLIGHTHOUSE.AC.NZ

CONSULTANTS

TENNENT + BROWN ARCHITECTS
DUNNING THORNTON CONSULTANTS LTD
LEAP AUSTRALASIA LTD
SOUTHERN PERSPECTIVES / SOLAR CITY

CLIENT
U.S. DEPARTMENT OF ENERGY
SOLAR DECATHLON 2011
WWW.SOLARDECATHLON.GOV

U.S. DEPARTMENT OF ENERGY SOLAR DECATHLON

MARK	DATE	DESCRIPTION
CN	11-01-11	FOR CONSTRUCTION

LOT NUMBER:	LOT NUMBER
DRAWN BY:	AUTHOR
CHECKED BY:	Checker
COPYRIGHT:	VICTORIA UNIVERSITY

SHEET TITLE
INTERIOR ELEVATIONS

I-211

8/13/2011 8:33:51 AM

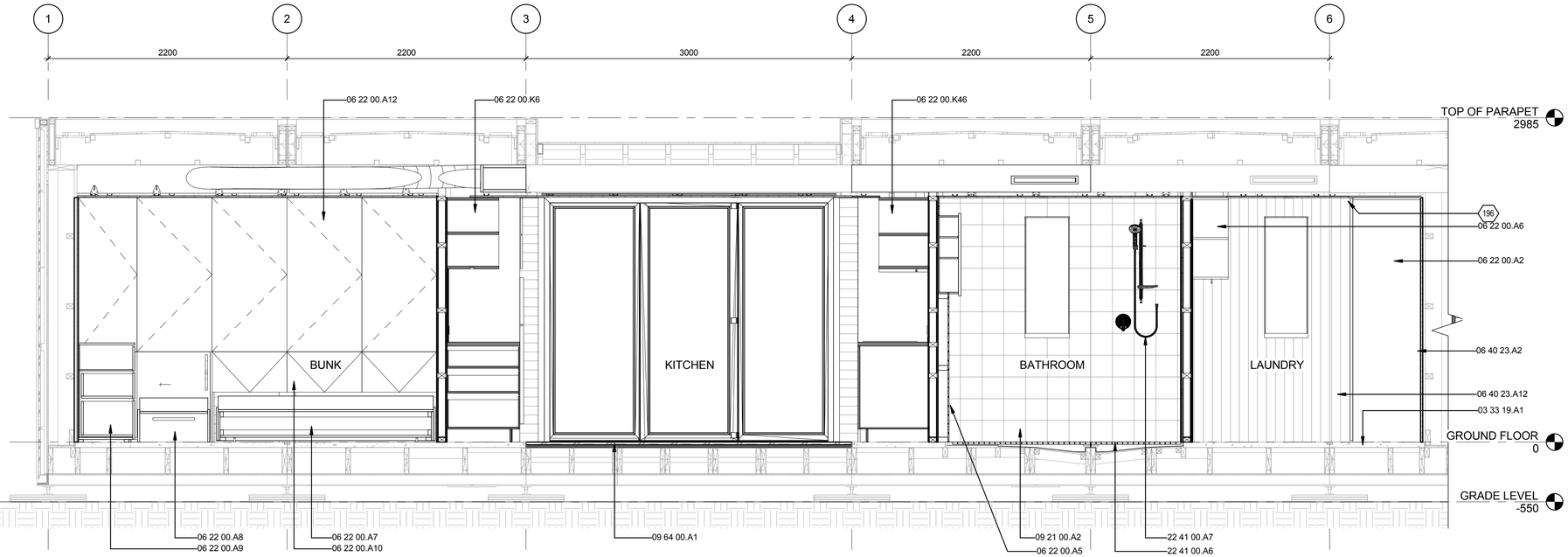

INTERIOR ELEVATION - NORTH THROUGH SERVICES CORE

C1 1 : 24

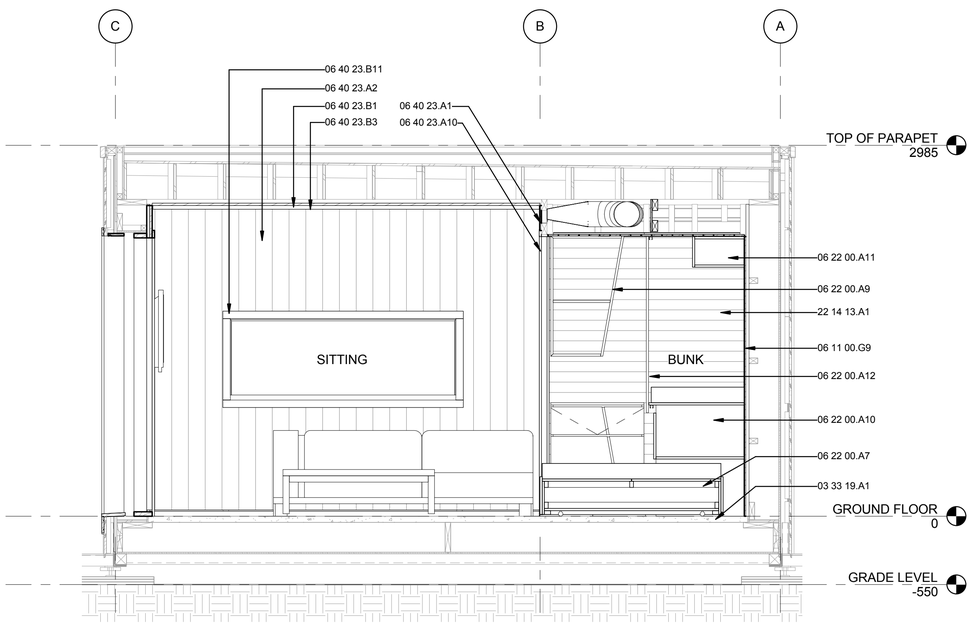

INTERIOR ELEVATION - WEST

A1 1 : 24

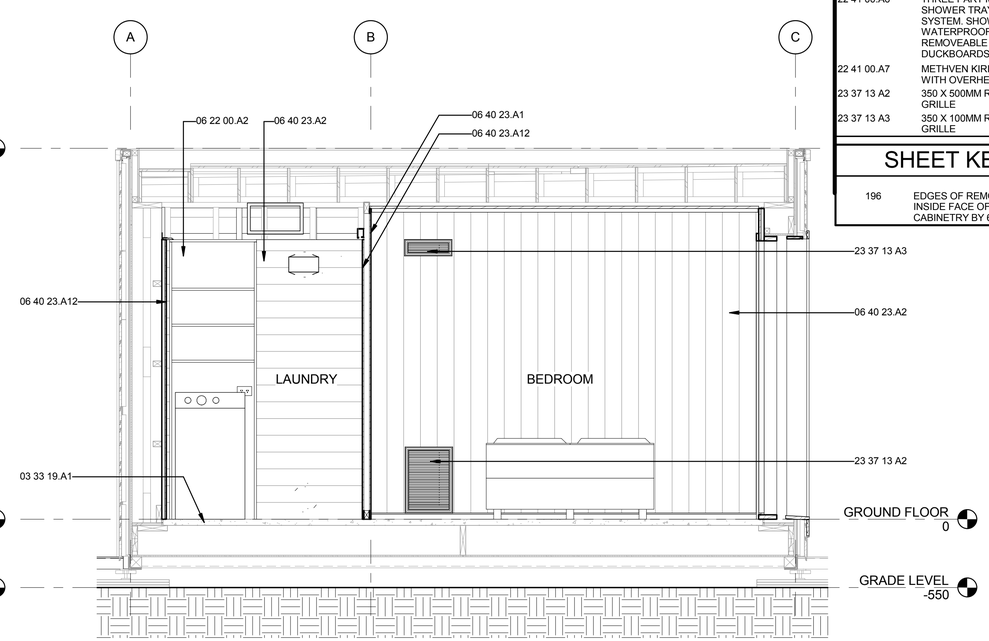

INTERIOR ELEVATION - EAST

A4 1 : 24

REFERENCE KEYNOTES

03 33 19.A1	50MM FLEXUS ENGINEERED CEMENTITIOUS COMPOSITE CONCRETE FLOOR WITH 10MM ARDEX PANDOMO K1 LEVELLING COMPOUND. CONCRETE FIXED WITH COMPOSITE FLOOR SHEAR CONNECTORS TO TIMBER JOISTS (REFER ENGINEERS SKETCH DETAIL FOR FIXING)
06 11 00.G9	45X25MM VERTICAL INTERNAL TIMBER CAVITY BATTENS FIXED TO WALL FRAMING. 400MM CENTRES MIN.
06 22 00.A2	WASHING MACHINE CABINET
06 22 00.A5	BATHROOM CABINET WITH 1150MM LED BAR MOUNTED ABOVE AND BELOW. REFER DETAIL DRAWINGS
06 22 00.A6	WARDROBE / STORAGE UNIT
06 22 00.A7	LIVING ROOM JOINERY - DOUBLE SOFA BED
06 22 00.A8	LIVING ROOM JOINERY - OTTOMAN
06 22 00.A9	LIVING ROOM JOINERY - BEDSIDE SHELVING/STORAGE UNIT. FIXED TO WALL AND CEILING STRUCTURE
06 22 00.A10	LIVING ROOM JOINERY - BUNK BED. PLATFORM ALSO ACTS AS KIDS' TV VIEWING PLATFORM WHEN BIFOLD DOORS ARE OPEN
06 22 00.A11	LIVING ROOM JOINERY - ABOVE BUNK SHELVING UNIT. PRE-ASSEMBLED AND TOP HUNG FROM CEILING STRUCTURE
06 22 00.A12	LIVING ROOM JOINERY - BIFOLD DOORS. TRACK GEAR FIXED ON-SITE. BOTTOM TRACK FIXED TO BUNK SHELVING UNIT, TOP TRACK TO CEILING.
06 22 00.K6	KITCHEN MODULE WEST
06 22 00.K46	KITCHEN MODULE EAST
06 40 23.A1	83X12MM HORIZONTAL TONGUE & GROOVE RIMU TIMBER BOARD INTERIOR LINNING.
06 40 23.A2	135X19MM WHITEWASHED TONGUE & GROOVE PROFILE VERTICAL TIMBER BOARD ON 45X25 TIMBER BATTENS
06 40 23.A10	EX 57X18MM INTERIOR TIMBER TRIM TO OPENINGS
06 40 23.A12	83X12MM VERTICAL TONGUE & GROOVE TIMBER BOARD INTERIOR LINNING. STAINED - RESENE WATERBOURNE COLOURWOOD 'WALNUT'
06 40 23.B1	135X19MM WHITEWASHED TONGUE & GROOVE PROFILE PINE TIMBER BOARD TO CEILING ALIGNED TO DIRECTION INDICATED
06 40 23.B3	30X6 TIMBER TRIM TO WALL CEILING JUNCTION
06 40 23.B11	60 X 19 WHITEWASHED PINE ARCHITRAVES TO WINDOWS IN LIVING SPACES
09 21 00.A2	200 X 200MM ETCHLITE BACKPAINTED GLASS TILES OVER WPM ON 12MM COMPRESSED FIBRE CEMENT SHEET SUBSTRATE
09 64 00.A1	3M X 1.3M PANELISED 20 X 140MM TIMBER FLOORING ON 12MM PLYWOOD (PLY = 200MM WIDE AT 400MM CENTRES) AND TIMBER PACKERS
22 14 13.A1	55X75MM RECTANGULAR FACTORY PAINTED STEEL DOWNPIPE
22 41 00.A6	THREE PART MERCER STAINLESS STEEL SHOWER TRAY UNDER DUCKBOARD SYSTEM. SHOWER TRAY CROSSES AND WATERPROOFS MODULE JOIN. REMOVEABLE HARDWOOD TIMBER DUCKBOARDS SIT OVER TRAY
22 41 00.A7	METHVEN KIRI SATINJET SHOWER SYSTEM WITH OVERHEAD RAINSHOWER COLUMN
23 37 13 A2	350 X 500MM RETURN AIR EGGCRATE GRILLE
23 37 13 A3	350 X 100MM RETURN AIR EGGCRATE GRILLE

SHEET KEYNOTES

196	EDGES OF REMOVABLE CEILING TO OVERLAP INSIDE FACE OF PERMANENTLY INSTALLED CABINETRY BY 6MM

FIRST LIGHT NZ

TEAM NAME:	FIRSTLIGHT NZ
ADDRESS:	139 VIVIAN STREET TE ARO, WELLINGTON NEWZEALAND
CONTACT:	INFO@FIRSTLIGHTHOUSE.AC.NZ WWW.FIRSTLIGHTHOUSE.AC.NZ

CONSULTANTS

TENNENT + BROWN ARCHITECTS

DUNNING THORNTON CONSULTANTS LTD

LEAP AUSTRALASIA LTD

SOUTHERN PERSPECTIVES / SOLAR CITY

CLIENT

U.S. DEPARTMENT OF ENERGY

SOLAR DECATHLON 2011

WWW.SOLARDECATHLON.GOV

U.S. DEPARTMENT OF ENERGY SOLAR DECATHLON

MARK	DATE	DESCRIPTION
CN	11-01-11	FOR CONSTRUCTION

LOT NUMBER:	LOT NUMBER
DRAWN BY:	Author
CHECKED BY:	Checker
COPYRIGHT:	VICTORIA UNIVERSITY

SHEET TITLE

INTERIOR ELEVATIONS

I-212

8/13/2011 8:34:05 AM

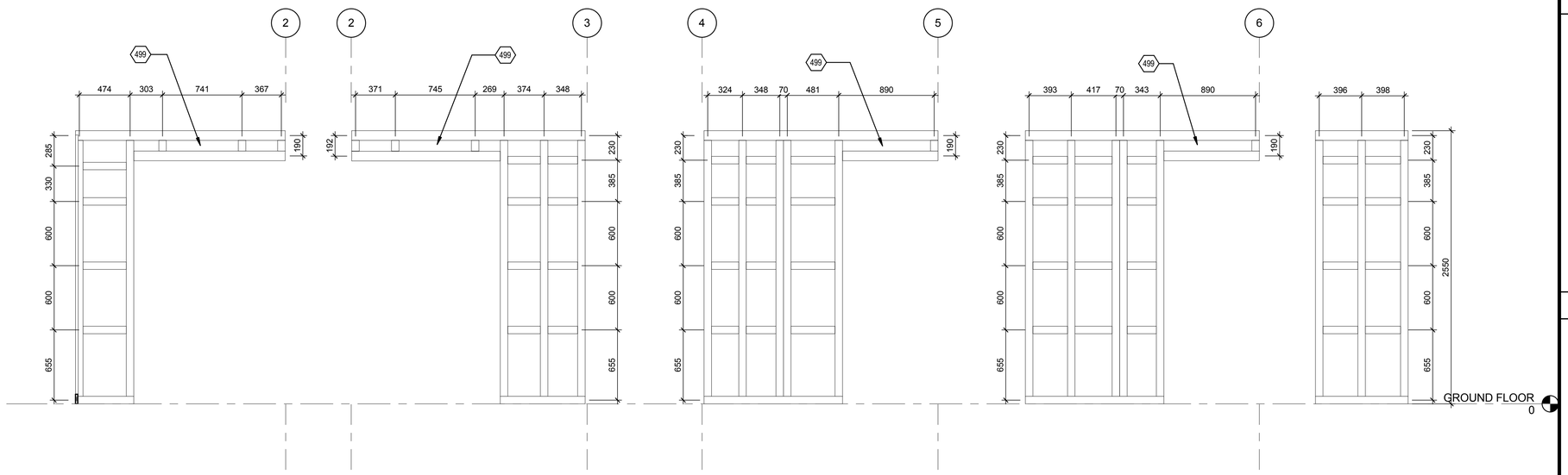

D1 MODULE 1
1 : 24

D2 MODULE 2
1 : 24

D3 MODULE 4
1 : 24

D5 MODULE 5
1 : 24

D6 MODULE 6
1 : 24

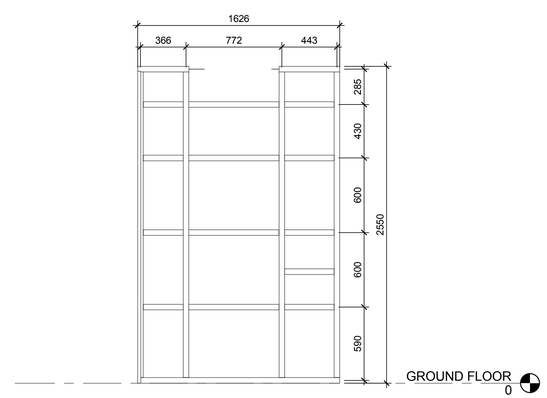

A5 TRANSVERSE FRAMING
1 : 24

0 1' 2' 4'

GENERAL SHEET NOTES

1.
ALL FRAMING TIMBER 70X45MM UNLESS OTHERWISE STATED
2.
ALL DIMENSIONS GIVEN TO THE CENTRE OF THE TIMBER FRAMING

REFERENCE KEYNOTES

SHEET KEYNOTES

499	FRAMING TO ALLOW FOR 600 X 100MM HVAC BRANCH AND GRILLE

FIRST LIGHT NZ

TEAM NAME:	FIRST LIGHT
ADDRESS:	139 VIVIAN STREET TE ARO, WELLINGTON NEWZEALAND
CONTACT:	ELINUTTALL@GMAIL.COM WWW.FIRSTLIGHTHOUSE.AC.NZ

CONSULTANTS

TENNENT + BROWN ARCHITECTS
DUNNING THORNTON CONSULTANTS LTD
LEAP AUSTRALASIA LTD
SOUTHERN PERSPECTIVES / SOLAR CITY

CLIENT

U.S. DEPARTMENT OF ENERGY
SOLAR DECATHLON 2011
WWW.SOLARDECATHLON.GOV

U.S. DEPARTMENT OF ENERGY SOLAR DECATHLON

MARK	DATE	DESCRIPTION
CN	11-01-11	FOR CONSTRUCTION

LOT NUMBER:	LOT NUMBER
DRAWN BY:	Author
CHECKED BY:	Checker
COPYRIGHT:	

SHEET TITLE

INTERIOR FRAMING ELEVATIONS

I-213

8/13/2011 8:34:10 AM

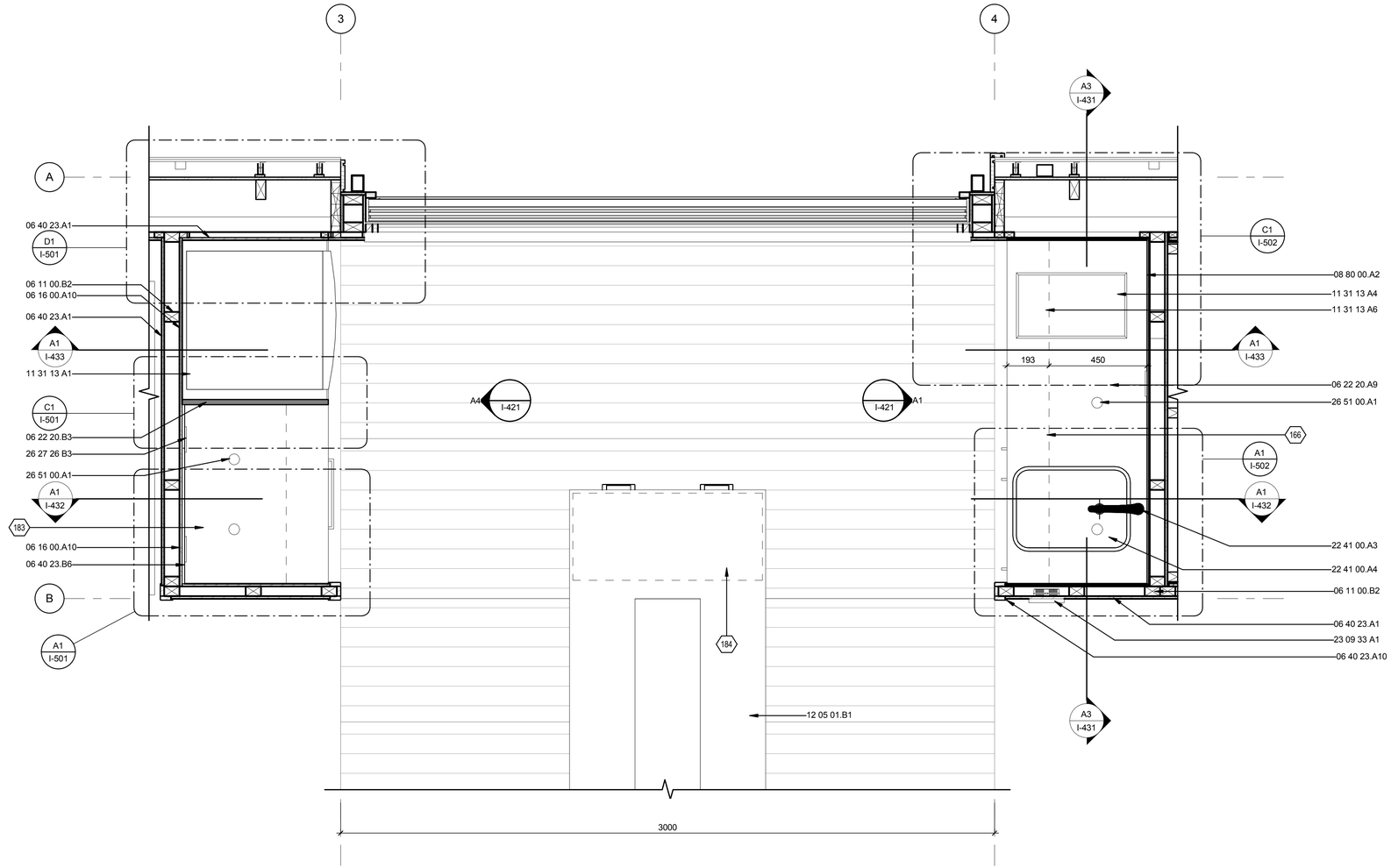

A1 KITCHEN PLAN
1 : 12

0 2' 4' 8'

8/13/2011 8:34:21 AM

GENERAL SHEET NOTES

REFERENCE KEYNOTES

06 11 00.B2	70X45MM TIMBER STUD
06 16 00.A10	12MM ECOPLY LINING NAIL FIXED AT 75MM CENTRES
06 22 20.A9	STAINLESS STEEL LAMINATED TO 36MM PLY BENCHTOP WITH 'WET EDGE' DETAILED FRONT EDGE - STAINLESS STEEL TO RETURN 50MM AT BACK EDGE
06 22 20.B3	24MM FULL HEIGHT MDF PANEL WITH RIMU VENEER TO BOTH SIDES AND RIMU EDGE TAPE
06 40 23.A1	83X12MM HORIZONTAL TONGUE & GROOVE RIMU TIMBER BOARD INTERIOR LINNING.
06 40 23.A10	EX 57X18MM INTERIOR TIMBER TRIM TO OPENINGS
06 40 23.B6	83X12MM HORIZONTAL TONGUE & GROOVE TIMBER BOARD INTERIOR LINNING PAINTED RESENE 'PEPPERMINT'
08 80 00.A2	6MM TOUGHENED GLASS SPLASHBACK FROSTED AND BACK PAINTED ON 6MM COMPRESSED FIBRE CEMENT SHEET. LAP OVER STAINLESS UPTURN.
11 31 13 A1	FISHER & PAYKEL FRIDGE FREEZER MODEL E331T
11 31 13 A4	FISHER & PAYKEL SLIMLINE INDUCTION HOB
11 31 13 A6	FISHER & PAYKEL RANGEHOOD MODEL HC60PCHTX1 OVERHEAD
12 05 01.B1	CONCRETE DINING TABLE. SEE RELEVANT SHEETS FOR DETAIL
22 41 00.A3	BENCHTOP MOUNTED METHVEN FUTURA KITCHEN MIXER TAP CENTRED ON SINK
22 41 00.A4	MERCER STAINLESS STELL UNDERMOUNT SINK INVISIBLE WELD TO STAINLESS BENCHTOP
23 09 33 A1	SCHNEIDER ELECTRIC MAGELIS HMI CONTROLLER
26 27 26 B3	PDL 600 SLIMLINE SERIES DOUBLE HORIZONTAL POWER SOCKETS POSITIONED AS SHOWN
26 51 00.A1	6W RECESSED LED DOWNLIGHT

SHEET KEYNOTES

166	LINE OF OVERHEAD CABINETRY SHOWN ABOVE.
183	STAINLESS STEEL BENCH FOR SMALL APPLIANCES OVER FULL-EXTENSION DRAWERS
184	ROLLOUT JOINERY UNIT SHOWN DASHED STORED UNDER TABLE

FIRST LIGHT NZ

TEAM NAME:	FIRSTLIGHT NZ
ADDRESS:	139 VIVIAN STREET TE ARO, WELLINGTON NEWZEALAND
CONTACT:	INFO@FIRSTLIGHTHOUSE.AC.NZ WWW.FIRSTLIGHTHOUSE.AC.NZ

CONSULTANTS

TENNENT + BROWN ARCHITECTS
DUNNING THORNTON CONSULTANTS LTD
LEAP AUSTRALASIA LTD
SOUTHERN PERSPECTIVES / SOLAR CITY

CLIENT

U.S. DEPARTMENT OF ENERGY
SOLAR DECATHLON 2011
WWW.SOLARDECATHLON.GOV

U.S. DEPARTMENT OF ENERGY SOLAR DECATHLON

MARK	DATE	DESCRIPTION
CN	11-01-11	FOR CONSTRUCTION

LOT NUMBER:	LOT NUMBER
DRAWN BY:	AUTHOR
CHECKED BY:	Checker
COPYRIGHT:	VICTORIA UNIVERSITY

SHEET TITLE

KITCHEN PLAN

I-411

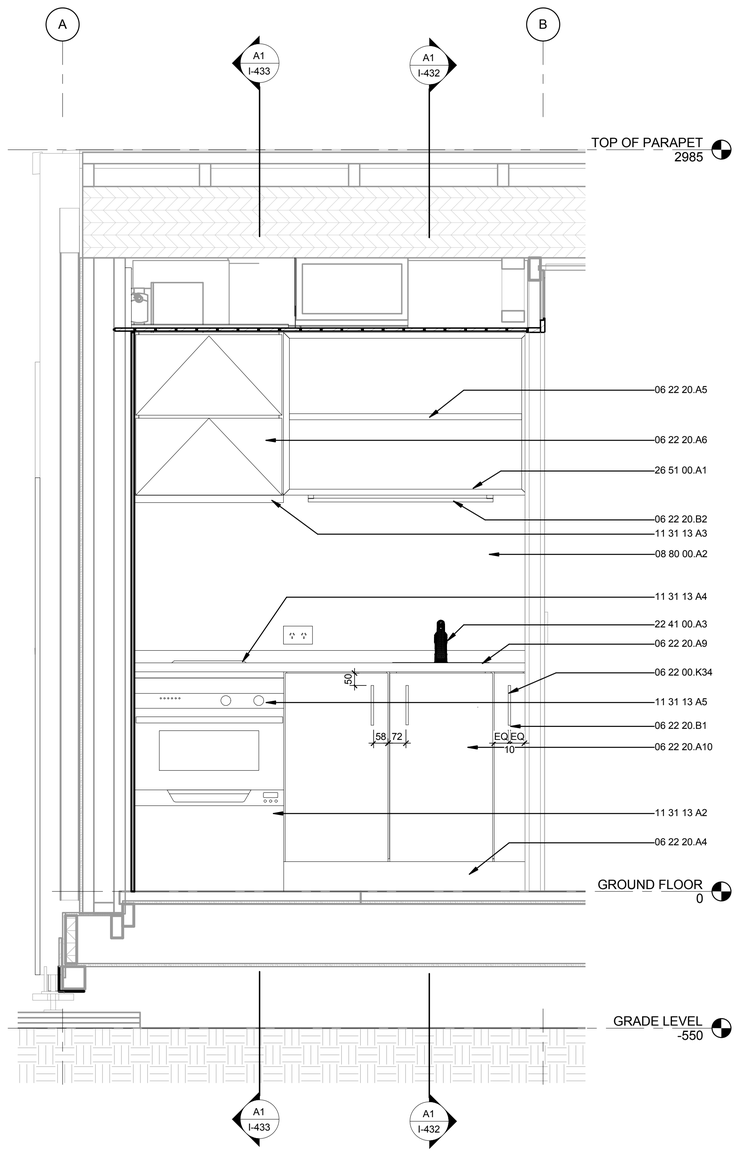

A1 KITCHEN ELEVATION EAST
1 : 12

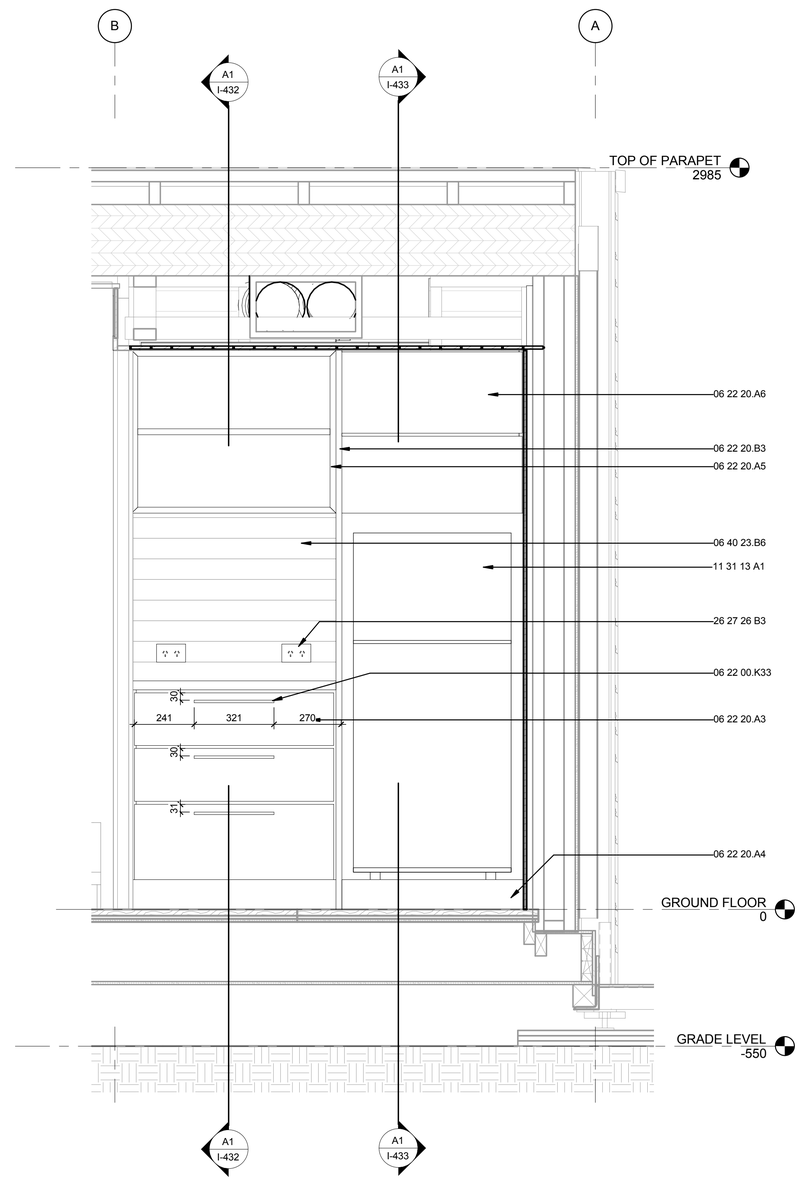

A4 KITCHEN ELEVATION WEST
1 : 12

0 1/2' 1' 2'

GENERAL SHEET NOTES

REFERENCE KEYNOTES

06 22 00.K33	320MM BRUSHED STAINLESS STEEL HANDLE TO KITCHEN CABINETRY
06 22 00.K34	160MM STAINLESS STEEL HANDLE TO KITCHEN CABINETRY
06 22 20.A3	HETTICH INNOTECH SOFT CLOSE DRAWERS ON QUADRO FULL EXTENSION RUNNERS
06 22 20.A4	MDF PODIUM CONSTRUCTED TO ALIGN FRIDGE WITH ADJACENT TOEKICK. PRESSED ALUMINIUM TO FRONT AND TOP FACES
06 22 20.A5	24MM MDF OPEN SHELVING, RIMU VENEERED ON BOTH FACES WITH RIMU EDGE TAPE APPLIED TO FRONT EDGE
06 22 20.A6	TOP HUNG 18MM 'RIMU HEART' LAMINATED MDF DOORS TO CABINETRY - HETTICH FLAP FITTING LIFE ADVANCED HK HARDWARE
06 22 20.A9	STAINLESS STEEL LAMINATED TO 36MM PLY BENCHTOP WITH 'WET EDGE' DETAILED FRONT EDGE - STAINLESS STEEL TO RETURN 50MM AT BACK EDGE
06 22 20.A10	SIDE HUNG 18MM 'RIMU HEART' LAMINATED MDF DOORS TO CABINETRY
06 22 20.B1	HETTICH CARGO IQ PULL-OUT TRAY DRAWER WITH QUADRO FULL EXTENSION V6 SLIDE
06 22 20.B2	ALUMINIUM UTENSIL BAR - HETTIC 744MM PRO DECOR RAIL #045209
06 22 20.B3	24MM FULL HEIGHT MDF PANEL WITH RIMU VENEER TO BOTH SIDES AND RIMU EDGE TAPE
06 40 23.B6	83X12MM HORIZONTAL TONGUE & GROOVE TIMBER BOARD INTERIOR LINNING PAINTED RESENE 'PEPPERMINT'
08 80 00.A2	6MM TOUGHENED GLASS SPLASHBACK FROSTED AND BACK PAINTED ON 6MM COMPRESSED FIBRE CEMENT SHEET. LAP OVER STAINLESS UPTURN.
11 31 13 A1	FISHER & PAYKEL FRIDGE FREEZER MODEL E331T
11 31 13 A2	FISHER & PAYKEL 6 PLACE SINGLE DISHDRAWER MODEL DD60SCX6
11 31 13 A3	FISHER & PAYKEL RANGEHOOD MODEL HC60PCHTX1
11 31 13 A4	FISHER & PAYKEL SLIMLINE INDUCTION HOB
11 31 13 A5	FISHER & PAYKEL COMPACT OVEN OB60NDEX1
22 41 00.A3	BENCHTOP MOUNTED METHVEN FUTURA KITCHEN MIXER TAP CENTRED ON SINK
26 27 26 B3	PDL 600 SLIMLINE SERIES DOUBLE HORIZONTAL POWER SOCKETS POSITIONED AS SHOWN
26 51 00.A1	6W RECESSED LED DOWNLIGHT

SHEET KEYNOTES

FIRST LIGHT NZ

TEAM NAME:	FIRSTLIGHT NZ
ADDRESS:	139 VIVIAN STREET TE ARO, WELLINGTON NEWZEALAND
CONTACT:	INFO@FIRSTLIGHTHOUSE.AC.NZ WWW.FIRSTLIGHTHOUSE.AC.NZ

CONSULTANTS

TENNENT + BROWN ARCHITECTS
DUNNING THORNTON CONSULTANTS LTD
LEAP AUSTRALASIA LTD
SOUTHERN PERSPECTIVES / SOLAR CITY

CLIENT

U.S. DEPARTMENT OF ENERGY
SOLAR DECATHLON 2011
WWW.SOLARDECATHLON.GOV

U.S. DEPARTMENT OF ENERGY SOLAR DECATHLON

MARK	DATE	DESCRIPTION
CN	11-01-11	FOR CONSTRUCTION

LOT NUMBER:	LOT NUMBER
DRAWN BY:	Author
CHECKED BY:	Checker
COPYRIGHT:	VICTORIA UNIVERSITY

SHEET TITLE

KITCHEN ELEVATIONS

I-421

8/13/2011 8:34:28 AM

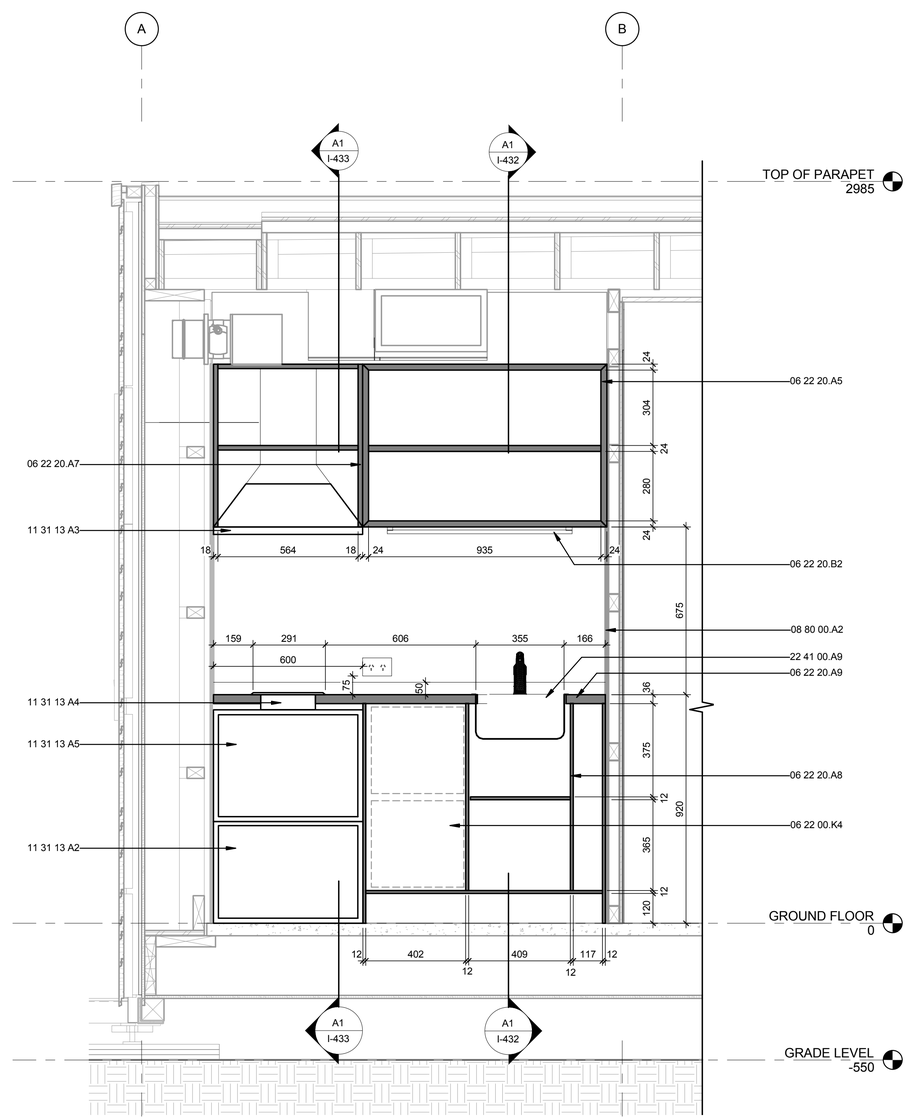

A3 KITCHEN SECTION 01 - INTERNAL CABINETRY LAYOUT

1 : 12

0 1/2' 1' 2'

GENERAL SHEET NOTES

REFERENCE KEYNOTES

06 22 00.K4	15L HETTICH COMPACT HIDEAWAY BINS STACKED (X4)
06 22 20.A5	24MM MDF OPEN SHELVING, RIMU VENEERED ON BOTH FACES WITH RIMU EDGE TAPE APPLIED TO FRONT EDGE
06 22 20.A7	18MM MDF CABINETRY. RIMU VENEERED ON BOTH SIDES WITH RIMU EDGE TAPE APPLIED TO EXPOSED EDGES.
06 22 20.A8	12MM WHITE MELAMINE CARCASS TO INTERIOR OF CABINET
06 22 20.A9	STAINLESS STEEL LAMINATED TO 36MM PLY BENCHTOP WITH 'WET EDGE' DETAILED FRONT EDGE - STAINLESS STEEL TO RETURN 50MM AT BACK EDGE
06 22 20.B2	ALUMINIUM UTENSIL BAR - HETTIC 744MM PRO DECOR RAIL #045209
08 80 00.A2	6MM TOUGHENED GLASS SPLASHBACK FROSTED AND BACK PAINTED ON 6MM COMPRESSED FIBRE CEMENT SHEET. LAP OVER STAINLESS UPTURN.
11 31 13 A2	FISHER & PAYKEL 6 PLACE SINGLE DISHDRAWER MODEL DD60SCX6
11 31 13 A3	FISHER & PAYKEL RANGEHOOD MODEL HC60PCHTX1
11 31 13 A4	FISHER & PAYKEL SLIMLINE INDUCTION HOB
11 31 13 A5	FISHER & PAYKEL COMPACT OVEN OB60NDEX1
22 41 00.A9	MECER 'RIVA' S/S SINK INVISIBLE WELD TO STAINLESS BENCHTOP

FIRST LIGHT NZ

TEAM NAME:	FIRST LIGHT
ADDRESS:	139 VIVIAN STREET TE ARO, WELLINGTON NEWZEALAND
CONTACT:	ELINUTTALL@GMAIL.COM WWW.FIRSTLIGHTHOUSE.AC.NZ

CONSULTANTS

TENNENT + BROWN ARCHITECTS

DUNNING THORNTON CONSULTANTS LTD

LEAP AUSTRALASIA LTD

SOUTHERN PERSPECTIVES / SOLAR CITY

CLIENT

U.S. DEPARTMENT OF ENERGY

SOLAR DECATHLON 2011

WWW.SOLARDECATHLON.GOV

U.S. DEPARTMENT OF ENERGY SOLAR DECATHLON

MARK	DATE	DESCRIPTION
CN	11-01-11	FOR CONSTRUCTION

LOT NUMBER:	LOT NUMBER
DRAWN BY:	Author
CHECKED BY:	Checker
COPYRIGHT:	

SHEET TITLE

KITCHEN SECTION 01

I-431

8/13/2011 8:34:33 AM

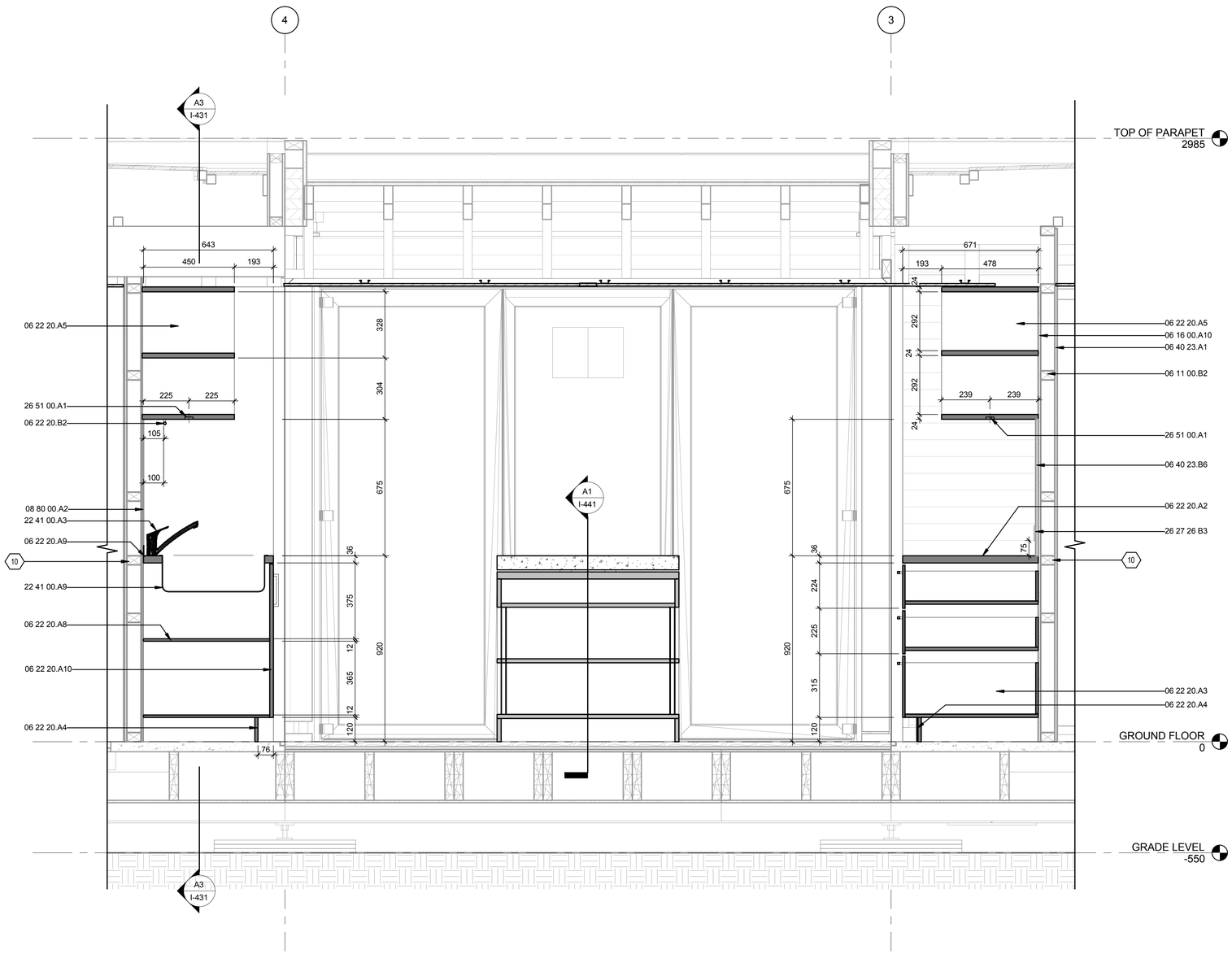

A1 KITCHEN SECTION 02
1 : 24

0 1/2' 1' 2'

8/13/2011 8:34:41 AM

GENERAL SHEET NOTES

REFERENCE KEYNOTES

06 11 00.B2	70X45MM TIMBER STUD
06 16 00.A10	12MM ECOPLY LINING NAIL FIXED AT 75MM CENTRES
06 22 20.A2	STAINLESS STEEL LAMINATED TO 36MM PLY BENCHTOP , STAINLESS RETURN 50MM AT BACK EDGE
06 22 20.A3	HETTICH INNOTECH SOFT CLOSE DRAWERS ON QUADRO FULL EXTENSION RUNNERS
06 22 20.A4	MDF PODIUM CONSTRUCTED TO ALIGN FRIDGE WITH ADJACENT TOEKICK. PRESSED ALUMINIUM TO FRONT AND TOP FACES
06 22 20.A5	24MM MDF OPEN SHELVING, RIMU VENEERED ON BOTH FACES WITH RIMU EDGE TAPE APPLIED TO FRONT EDGE
06 22 20.A8	12MM WHITE MELAMINE CARCASS TO INTERIOR OF CABINET
06 22 20.A9	STAINLESS STEEL LAMINATED TO 36MM PLY BENCHTOP WITH 'WET EDGE' DETAILED FRONT EDGE - STAINLESS STEEL TO RETURN 50MM AT BACK EDGE
06 22 20.A10	SIDE HUNG 18MM 'RIMU HEART' LAMINATED MDF DOORS TO CABINETRY
06 22 20.B2	ALUMINIUM UTENSIL BAR - HETTIC 744MM PRO DECOR RAIL #045209
06 40 23.A1	83X12MM HORIZONTAL TONGUE & GROOVE RIMU TIMBER BOARD INTERIOR LINNING.
06 40 23.B6	83X12MM HORIZONTAL TONGUE & GROOVE TIMBER BOARD INTERIOR LINNING PAINTED RESENE 'PEPPERMINT'
08 80 00.A2	6MM TOUGHENED GLASS SPLASHBACK FROSTED AND BACK PAINTED ON 6MM COMPRESSED FIBRE CEMENT SHEET. LAP OVER STAINLESS UPTURN.
22 41 00.A3	BENCHTOP MOUNTED METHVEN FUTURA KITCHEN MIXER TAP CENTRED ON SINK
22 41 00.A9	MECER 'RIVA' S/S SINK INVISIBLE WELD TO STAINLESS BENCHTOP
26 27 26 B3	PDL 600 SLIMLINE SERIES DOUBLE HORIZONTAL POWER SOCKETS POSITIONED AS SHOWN
26 51 00.A1	6W RECESSED LED DOWNLIGHT

SHEET KEYNOTES

10	TIMBER BLOCKING WHERE REQUIRED

FIRST LIGHT NZ

TEAM NAME:	FIRST LIGHT
ADDRESS:	139 VIVIAN STREET TE ARO, WELLINGTON NEWZEALAND
CONTACT:	ELINUTTALL@GMAIL.COM WWW.FIRSTLIGHTHOUSE.AC.NZ

CONSULTANTS

TENNENT + BROWN ARCHITECTS

DUNNING THORNTON CONSULTANTS LTD

LEAP AUSTRALASIA LTD

SOUTHERN PERSPECTIVES / SOLAR CITY

CLIENT

U.S. DEPARTMENT OF ENERGY

SOLAR DECATHLON 2011

WWW.SOLARDECATHLON.GOV

U.S. DEPARTMENT OF ENERGY SOLAR DECATHLON

MARK	DATE	DESCRIPTION
CN	11-01-11	FOR CONSTRUCTION

LOT NUMBER:	LOT NUMBER
DRAWN BY:	Author
CHECKED BY:	Checker
COPYRIGHT:	

SHEET TITLE

KITCHEN SECTION 02

I-432

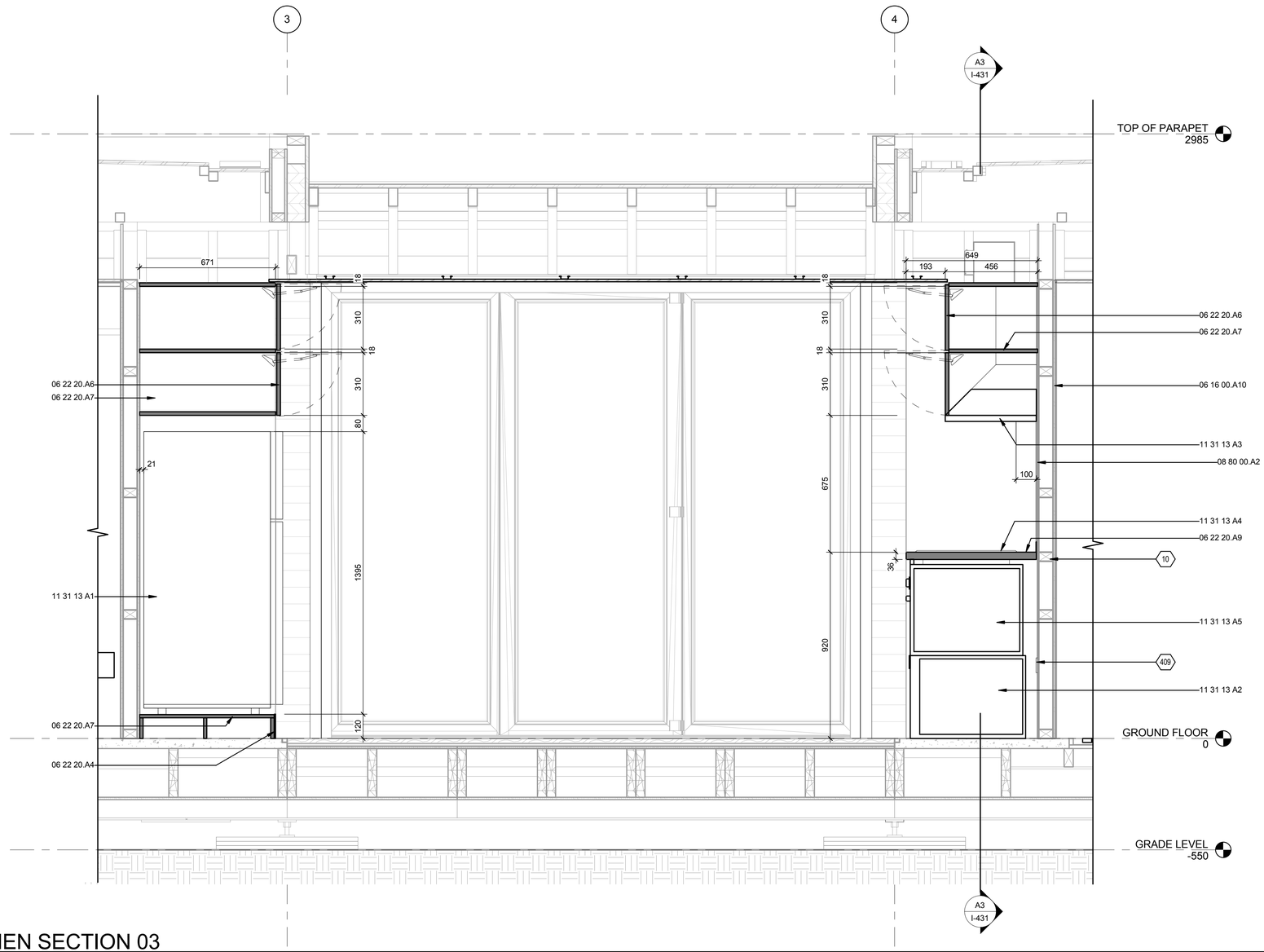

A1 KITCHEN SECTION 03
1 : 24

0 1/2' 1' 2'

GENERAL SHEET NOTES

REFERENCE KEYNOTES

06 16 00.A10	12MM ECOPLY LINING NAIL FIXED AT 75MM CENTRES
06 22 20.A4	MDF PODIUM CONSTRUCTED TO ALIGN FRIDGE WITH ADJACENT TOEKICK. PRESSED ALUMINIUM TO FRONT AND TOP FACES
06 22 20.A6	TOP HUNG 18MM 'RIMU HEART' LAMINATED MDF DOORS TO CABINETRY - HETTICH FLAP FITTING LIFE ADVANCED HK HARDWARE
06 22 20.A7	18MM MDF CABINETRY. RIMU VENEERED ON BOTH SIDES WITH RIMU EDGE TAPE APPLIED TO EXPOSED EDGES.
06 22 20.A9	STAINLESS STEEL LAMINATED TO 36MM PLY BENCHTOP WITH 'WET EDGE' DETAILED FRONT EDGE - STAINLESS STEEL TO RETURN 50MM AT BACK EDGE
08 80 00.A2	6MM TOUGHENED GLASS SPLASHBACK FROSTED AND BACK PAINTED ON 6MM COMPRESSED FIBRE CEMENT SHEET. LAP OVER STAINLESS UPTURN.
11 31 13 A1	FISHER & PAYKEL FRIDGE FREEZER MODEL E331T
11 31 13 A2	FISHER & PAYKEL 6 PLACE SINGLE DISHDRAWER MODEL DD60SCX6
11 31 13 A3	FISHER & PAYKEL RANGEHOOD MODEL HC60PCHTX1
11 31 13 A4	FISHER & PAYKEL SLIMLINE INDUCTION HOB
11 31 13 A5	FISHER & PAYKEL COMPACT OVEN OB60NDEX1

SHEET KEYNOTES

10	TIMBER BLOCKING WHERE REQUIRED
409	RECEPTACLES FOR OVEN AND DISHWASHER INSTALLED ON THIS WALL. POWER SWITCH LOCATED ABOVE BENCH

FIRST LIGHT NZ

TEAM NAME:	FIRSTLIGHT NZ
ADDRESS:	139 VIVIAN STREET TE ARO, WELLINGTON NEWZEALAND
CONTACT:	INFO@FIRSTLIGHTHOUSE.AC.NZ WWW.FIRSTLIGHTHOUSE.AC.NZ

CONSULTANTS

TENNENT + BROWN ARCHITECTS
DUNNING THORNTON CONSULTANTS LTD
LEAP AUSTRALASIA LTD
SOUTHERN PERSPECTIVES / SOLAR CITY

CLIENT

U.S. DEPARTMENT OF ENERGY
SOLAR DECATHLON 2011
WWW.SOLARDECATHLON.GOV

U.S. DEPARTMENT OF ENERGY SOLAR DECATHLON

MARK	DATE	DESCRIPTION
CN	11-01-11	FOR CONSTRUCTION

LOT NUMBER:	LOT NUMBER
DRAWN BY:	Author
CHECKED BY:	Checker
COPYRIGHT:	VICTORIA UNIVERSITY

SHEET TITLE

KITCHEN SECTION 03

I-433

8/13/2011 8:34:45 AM

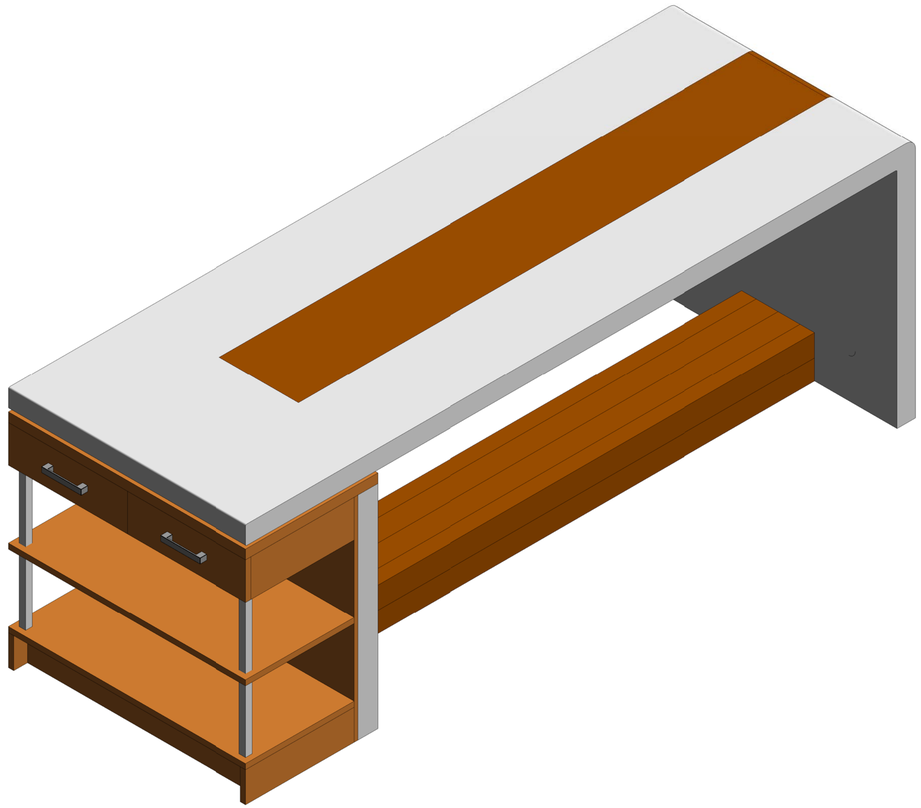

C1 DINING TABLE ISOMETRIC

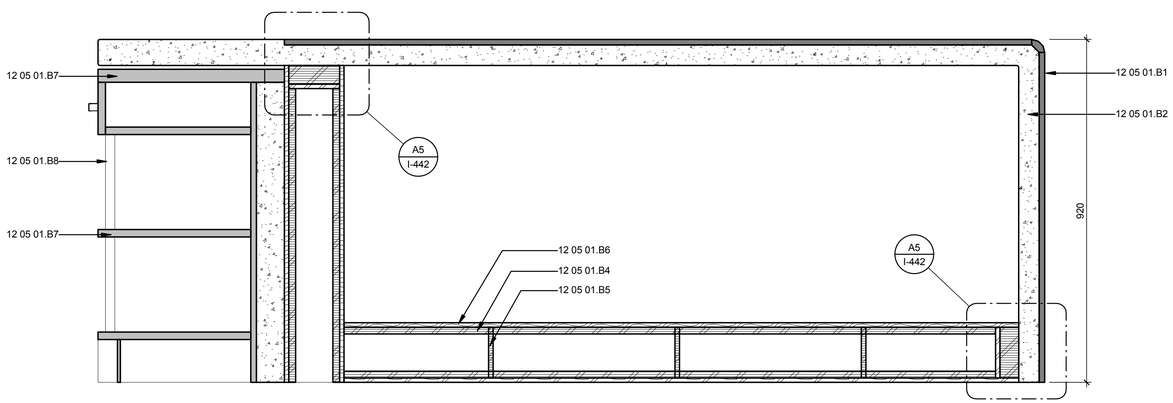

A1 DINING TABLE SECTION
1 : 8

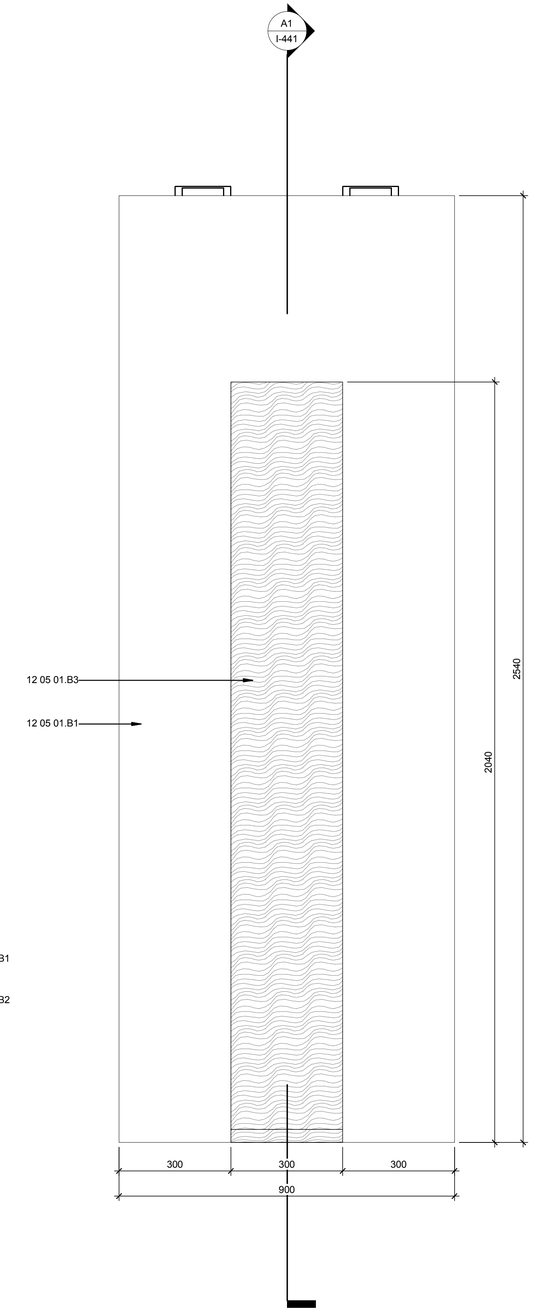

A5 DINING TABLE PLAN
1 : 8

GENERAL SHEET NOTES

REFERENCE KEYNOTES

12 05 01.B1	CONCRETE DINING TABLE. SEE RELEVANT SHEETS FOR DETAIL
12 05 01.B2	GLASS REINFORCED CONCRETE WITH POLYSTYRENE CORE TO FORM TOP AND SIDE OF TABLE
12 05 01.B3	300MM X 15MM RIMU VENEERED PLYWOOD INSERT
12 05 01.B4	18MM PLYWOOD FRAMED LEG TO CONCRETE TABLE
12 05 01.B5	PLYWOOD GUSSET TO INTERIOR OF PLYWOOD FRAMED LEG
12 05 01.B6	TABLE LEG FINISHED IN 83 X 12 RIMU TOUNGE AND GROOVE BOARDS
12 05 01.B7	RIMU VENEERED MDF CARCASS AND DRAWERS WITH RIMU EDGE TAPE TO EXPOSED EDGES
12 05 01.B8	25 X 25 X 2MM ALUMINIUM SHS

SHEET KEYNOTES

FIRST LIGHT NZ

TEAM NAME:	FIRST LIGHT
ADDRESS:	139 VIVIAN STREET TE ARO, WELLINGTON NEWZEALAND
CONTACT:	ELINUTTALL@GMAIL.COM WWW.FIRSTLIGHTHOUSE.AC.NZ

CONSULTANTS

TENNENT + BROWN ARCHITECTS
DUNNING THORNTON CONSULTANTS LTD
LEAP AUSTRALASIA LTD
SOUTHERN PERSPECTIVES / SOLAR CITY

CLIENT

U.S. DEPARTMENT OF ENERGY
SOLAR DECATHLON 2011
WWW.SOLARDECATHLON.GOV

U.S. DEPARTMENT OF ENERGY SOLAR DECATHLON

MARK	DATE	DESCRIPTION
CN	11-01-11	FOR CONSTRUCTION

LOT NUMBER:	LOT NUMBER
DRAWN BY:	Author
CHECKED BY:	Checker
COPYRIGHT:	

SHEET TITLE

DINING TABLE

I-441

8/13/2011 8:34:55 AM

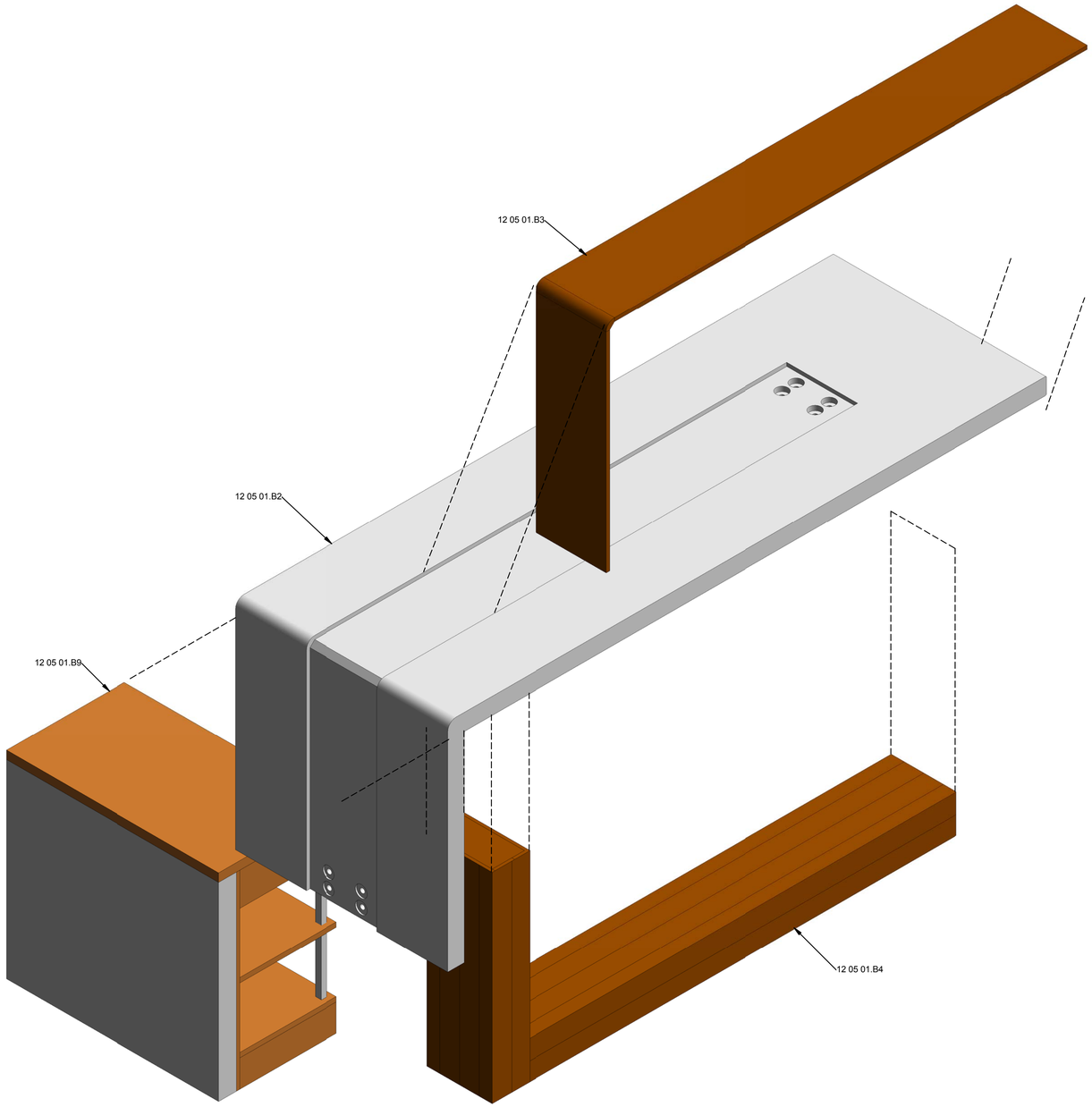

A1 DINING TABLE - EXPLODED ISOMETRIC

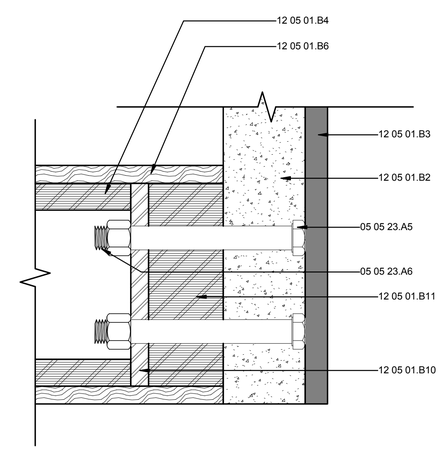

A5 CONCRETE / PLY LEG CONNECTOR
1 : 2

GENERAL SHEET NOTES

REFERENCE KEYNOTES

05 05 23.A5	M16 STAINLESS STEEL BOLT
05 05 23.A6	STAINLESS LOCKING NUTS WELDED TO PLATE
12 05 01.B2	GLASS REINFORCED CONCRETE WITH POLYSTYRENE CORE TO FORM TOP AND SIDE OF TABLE
12 05 01.B3	300MM X 15MM RIMU VENEERED PLYWOOD INSERT
12 05 01.B4	18MM PLYWOOD FRAMED LEG TO CONCRETE TABLE
12 05 01.B6	TABLE LEG FINISHED IN 83 X 12 RIMU TOUNGE AND GROOVE BOARDS
12 05 01.B9	SLIDE OUT DRAWER AND WORK SURFACE UNIT
12 05 01.B10	STAINLESS STEEL PLATE
12 05 01.B11	50MM PLYWOOD LEG END

SHEET KEYNOTES

FIRST LIGHT NZ

TEAM NAME:	FIRST LIGHT
ADDRESS:	139 VIVIAN STREET TE ARO, WELLINGTON NEWZEALAND
CONTACT:	ELINUTTALL@GMAIL.COM WWW.FIRSTLIGHTHOUSE.AC.NZ

CONSULTANTS

TENNENT + BROWN ARCHITECTS
DUNNING THORNTON CONSULTANTS LTD
LEAP AUSTRALASIA LTD
SOUTHERN PERSPECTIVES / SOLAR CITY

CLIENT
U.S. DEPARTMENT OF ENERGY
SOLAR DECATHLON 2011
WWW.SOLARDECATHLON.GOV

U.S. DEPARTMENT OF ENERGY SOLAR DECATHLON

MARK	DATE	DESCRIPTION
CN	11-01-11	FOR CONSTRUCTION

LOT NUMBER:	LOT NUMBER
DRAWN BY:	Author
CHECKED BY:	Checker
COPYRIGHT:	

SHEET TITLE
DINING TABLE EXPLODED ISO & DETAIL

I-442

8/13/2011 8:35:08 AM

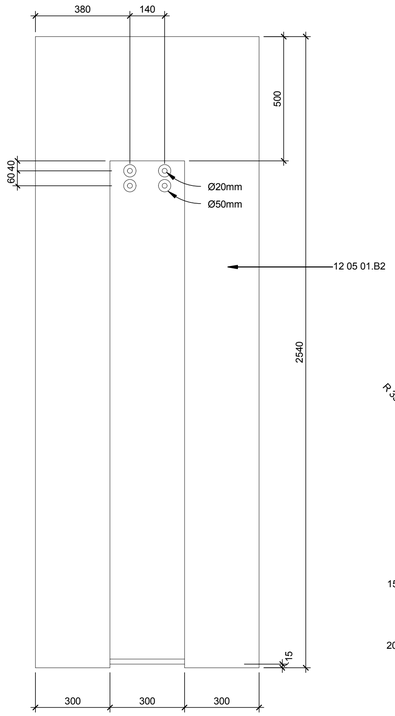

C1 CONCRETE TOP PLAN
1 : 12

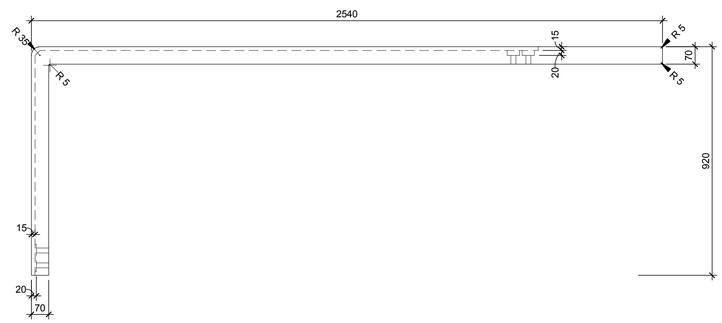

C2 CONCRETE TOP FRONT ELEVATION
1 : 12

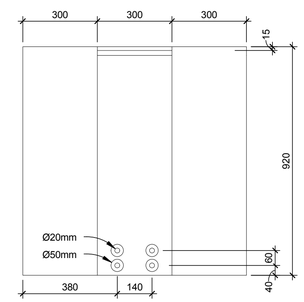

C5 CONCRETE TOP SIDE ELEVATION
1 : 12

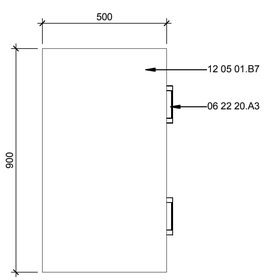

A1 DRAWER UNIT PLAN
1 : 12

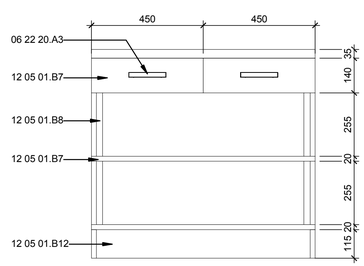

A2 DRAWER UNIT FRONT
1 : 12

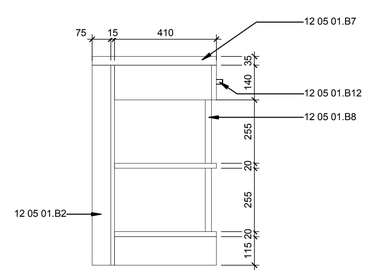

A4 DINING TABLE - DRAWER UNIT SIDE ELEVATION
1 : 12

GENERAL SHEET NOTES

REFERENCE KEYNOTES

06 22 20.A3	HETTICH INNOTECH SOFT CLOSE DRAWERS ON QUADRO FULL EXTENSION RUNNERS
12 05 01.B2	GLASS REINFORCED CONCRETE WITH POLYSTYRENE CORE TO FORM TOP AND SIDE OF TABLE
12 05 01.B7	RIMU VENEERED MDF CARCASS AND DRAWERS WITH RIMU EDGE TAPE TO EXPOSED EDGES
12 05 01.B8	25 X 25 X 2MM ALUMINIUM SHS
12 05 01.B12	RECESSED RIMU VENEERED TOE KICK

SHEET KEYNOTES

FIRST LIGHT NZ

TEAM NAME: FIRST LIGHT
ADDRESS: 139 VIVIAN STREET
TE ARO, WELLINGTON
NEWZEALAND
CONTACT: ELINUTTALL@GMAIL.COM
WWW.FIRSTLIGHTHOUSE.AC.NZ

CONSULTANTS

TENNENT + BROWN ARCHITECTS
DUNNING THORNTON CONSULTANTS LTD
LEAP AUSTRALASIA LTD
SOUTHERN PERSPECTIVES / SOLAR CITY

CLIENT
U.S. DEPARTMENT OF ENERGY
SOLAR DECATHLON 2011
WWW.SOLARDECATHLON.GOV

U.S. DEPARTMENT OF ENERGY SOLAR DECATHLON

MARK	DATE	DESCRIPTION
CN	11-01-11	FOR CONSTRUCTION

LOT NUMBER: LOT NUMBER
DRAWN BY: Author
CHECKED BY: Checker
COPYRIGHT:

SHEET TITLE
DINING TABLE - DETAILS

I-443

8/13/2011 8:35:13 AM

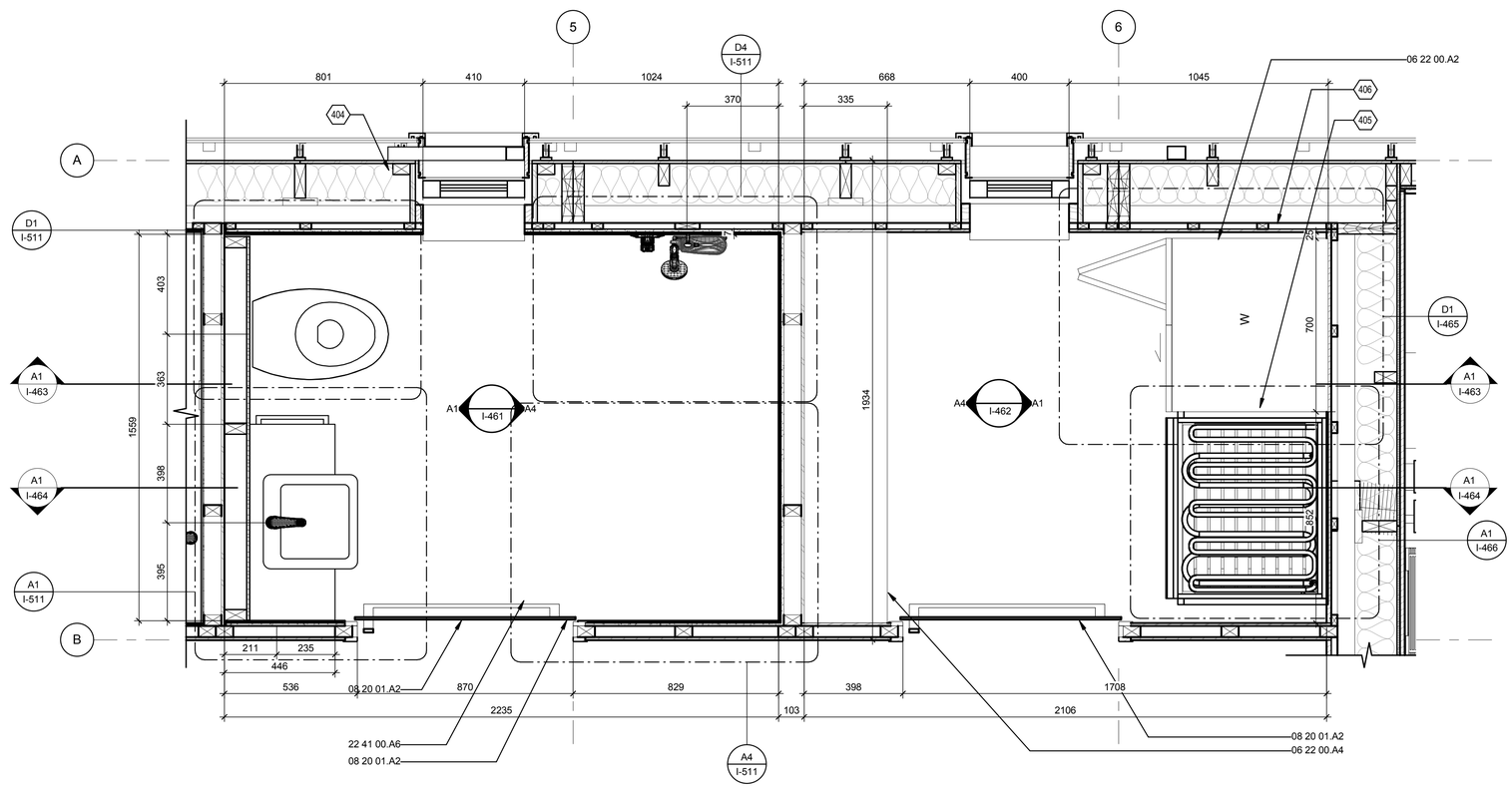

A1 BATHROOM AND LAUNDRY PLAN

1 : 12

0 2' 4' 8'

GENERAL SHEET NOTES

REFERENCE KEYNOTES

06 22 00.A2	WASHING MACHINE CABINET
06 22 00.A4	LINE OF STORAGE UNIT ABOVE - REFER ELEVATIONS FOR DETAILS
08 20 01.A2	10MM TOP HUNG FLOOR TO CEILING TOUGHENED GLASS FACE-SLIDER. ACID ETCHED ON SOUTH FACE. DORMA AGILE 150 SLIDING DOOR SYSTEM
22 41 00.A6	THREE PART MERCER STAINLESS STEEL SHOWER TRAY UNDER DUCKBOARD SYSTEM. SHOWER TRAY CROSSES AND WATERPROOFS MODULE JOIN. REMOVEABLE HARDWOOD TIMBER DUCKBOARDS SIT OVER TRAY

SHEET KEYNOTES

404	INSULATION SHOWN INDICATIVE ONLY. REFER DETAIL DRAWINGS AND SPECIFICATION FOR LOCATION, EXTENT AND TYPES
405	25MM PAINTED MDF NEGATIVE BETWEEN WASHING MACHINE CABINET AND HYDRONIC DRYING CABINET
406	25MM GAP BETWEEN WASHING MACHINE CABINET AND WALL. CONFIRM WITH MANUFACTURER TOLERANCE REQUIRED FOR CABINET DOOR

FIRST LIGHT NZ

TEAM NAME: FIRSTLIGHT NZ

ADDRESS: 139 VIVIAN STREET
TE ARO, WELLINGTON
NEWZEALAND

CONTACT: INFO@FIRSTLIGHTHOUSE.AC.NZ
WWW.FIRSTLIGHTHOUSE.AC.NZ

CONSULTANTS

TENNENT + BROWN ARCHITECTS

DUNNING THORNTON CONSULTANTS LTD

LEAP AUSTRALASIA LTD

SOUTHERN PERSPECTIVES / SOLAR CITY

CLIENT

U.S. DEPARTMENT OF ENERGY

SOLAR DECATHLON 2011

WWW.SOLARDECATHLON.GOV

U.S. DEPARTMENT OF ENERGY SOLAR DECATHLON

MARK	DATE	DESCRIPTION
CN	11-01-11	FOR CONSTRUCTION

LOT NUMBER:	LOT NUMBER
DRAWN BY:	Author
CHECKED BY:	Checker
COPYRIGHT:	VICTORIA UNIVERSITY

SHEET TITLE

BATHROOM PLAN & LDY PLAN

I-451

8/13/2011 8:35:20 AM

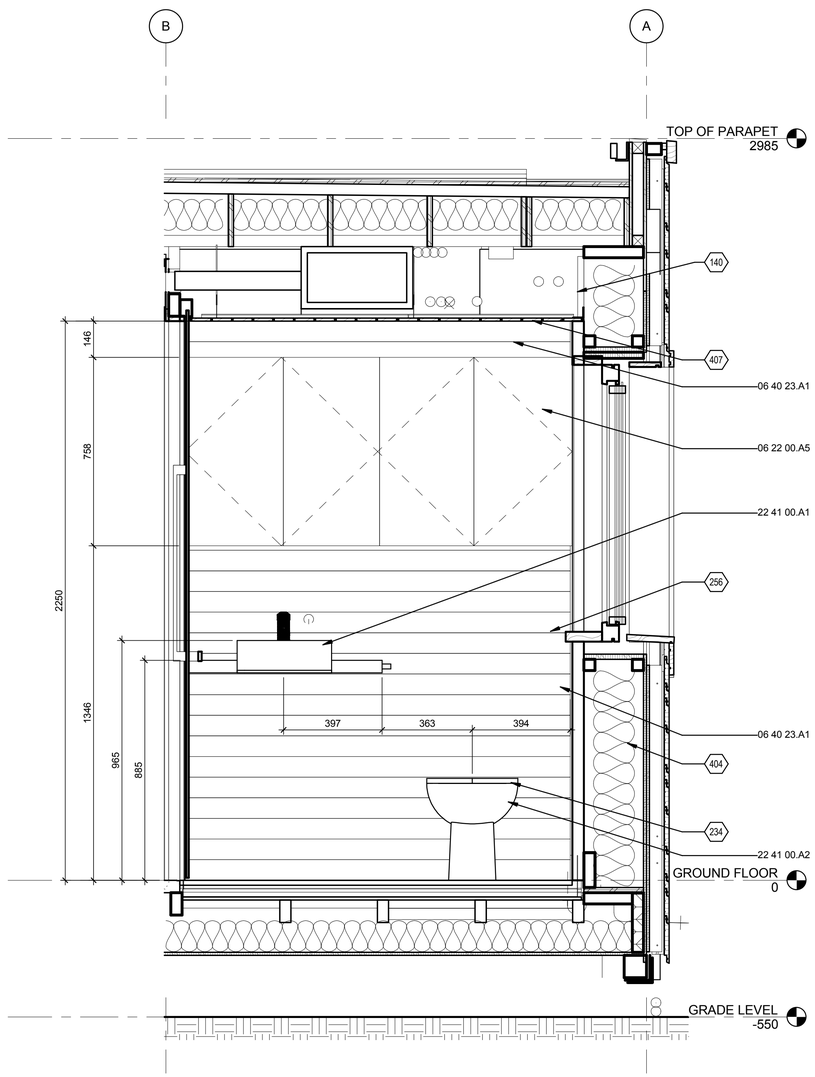

A1 BATHROOM ELEVATION - WEST
1 : 12

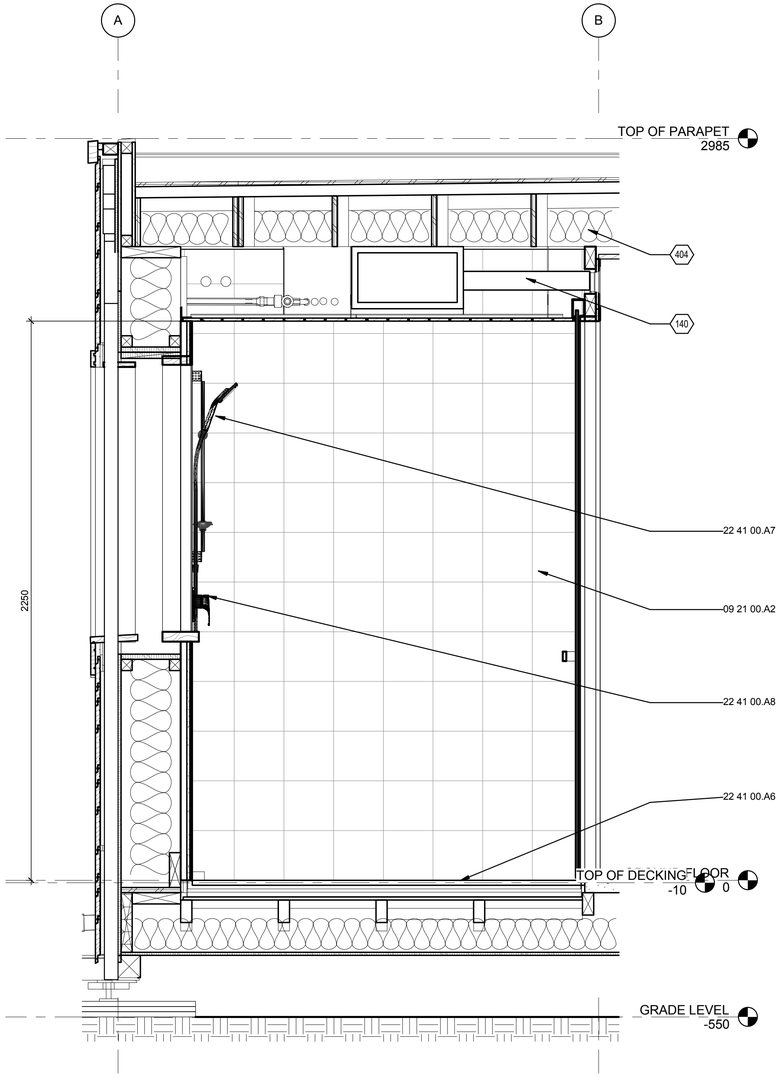

A4 BATHROOM ELEVATION - EAST
1 : 12

0 1/2' 1' 2'

GENERAL SHEET NOTES

REFERENCE KEYNOTES

06 22 00.A5	BATHROOM CABINET WITH 1150MM LED BAR MOUNTED ABOVE AND BELOW. REFER DETAIL DRAWINGS
06 40 23.A1	83X12MM HORIZONTAL TONGUE & GROOVE RIMU TIMBER BOARD INTERIOR LINNING.
09 21 00.A2	200 X 200MM ETCHLITE BACKPAINTED GLASS TILES OVER WPM ON 12MM COMPRESSED FIBRE CEMENT SHEET SUBSTRATE
22 41 00.A1	380 X 380 X 130MM TRENZ SEMI RECESSED BASIN. MODEL 4148-C
22 41 00.A2	IMEX CB-1088 ARCO BACK-TO-WALL TOILET PAN WITH FULLY FRAMED 'WATERMARK' DUAL FLUSH IN-WALL CISTERN. REFER MANUFACTURERS SPECIFICATIONS FOR INSTALLATION DETAILS
22 41 00.A6	THREE PART MERCER STAINLESS STEEL SHOWER TRAY UNDER DUCKBOARD SYSTEM. SHOWER TRAY CROSSES AND WATERPROOFS MODULE JOIN. REMOVEABLE HARDWOOD TIMBER DUCKBOARDS SIT OVER TRAY
22 41 00.A7	METHVEN KIRI SATINJET SHOWER SYSTEM WITH OVERHEAD RAINSHOWER COLUMN
22 41 00.A8	METHVEN FUTURA FT SHOWER MIXER TAP

SHEET KEYNOTES

140	SERVICES BULKHEAD
234	WC NOT CONNECTED TO MAIN DRAIN AND CAPPED FOR PURPOSES OF THE COMPETITION
256	WALL BUILT OUT 90MM TO ACCOMODATE PIPEWORK & IN-WALL CISTERN UP TO LEVEL OF CABINETRY
404	INSULATION SHOWN INDICATIVE ONLY. REFER DETAIL DRAWINGS AND SPECIFICATION FOR LOCATION, EXTENT AND TYPES
407	REMOVEABLE RIMU T&G CEILING PANELS TO ALL CEILINGS THROUGH BUILDING CORE - REFER INTERIOR DRAWING SET FOR DETAILS AND SETOUT

FIRST LIGHT NZ

TEAM NAME:	FIRSTLIGHT NZ
ADDRESS:	139 VIVIAN STREET TE ARO, WELLINGTON NEWZEALAND
CONTACT:	INFO@FIRSTLIGHTHOUSE.AC.NZ WWW.FIRSTLIGHTHOUSE.AC.NZ

CONSULTANTS

TENNENT + BROWN ARCHITECTS

DUNNING THORNTON CONSULTANTS LTD

LEAP AUSTRALASIA LTD

SOUTHERN PERSPECTIVES / SOLAR CITY

CLIENT

U.S. DEPARTMENT OF ENERGY

SOLAR DECATHLON 2011

WWW.SOLARDECATHLON.GOV

U.S. DEPARTMENT OF ENERGY SOLAR DECATHLON

MARK	DATE	DESCRIPTION
CN	11-01-11	FOR CONSTRUCTION

LOT NUMBER:	LOT NUMBER
DRAWN BY:	Author
CHECKED BY:	Checker
COPYRIGHT:	VICTORIA UNIVERSITY

SHEET TITLE

BATHROOM ELEVATIONS

I-461

8/13/2011 8:35:30 AM

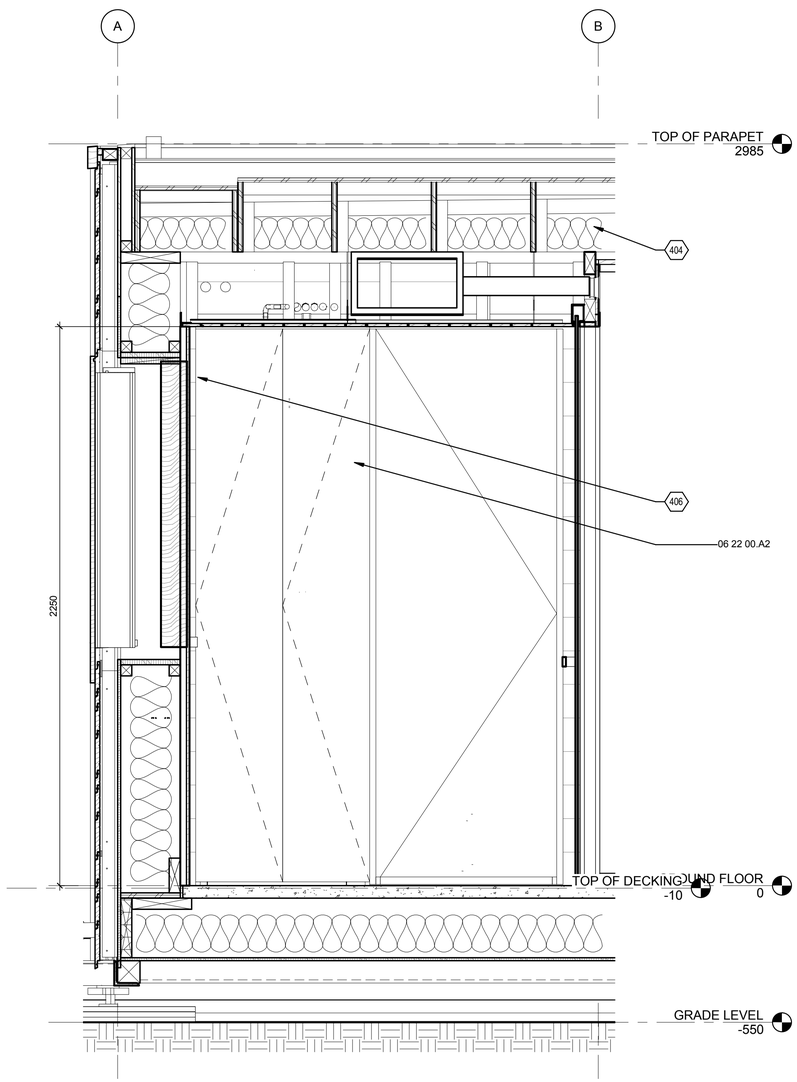

A1 LAUNDRY ELEVATION EAST
1 : 12

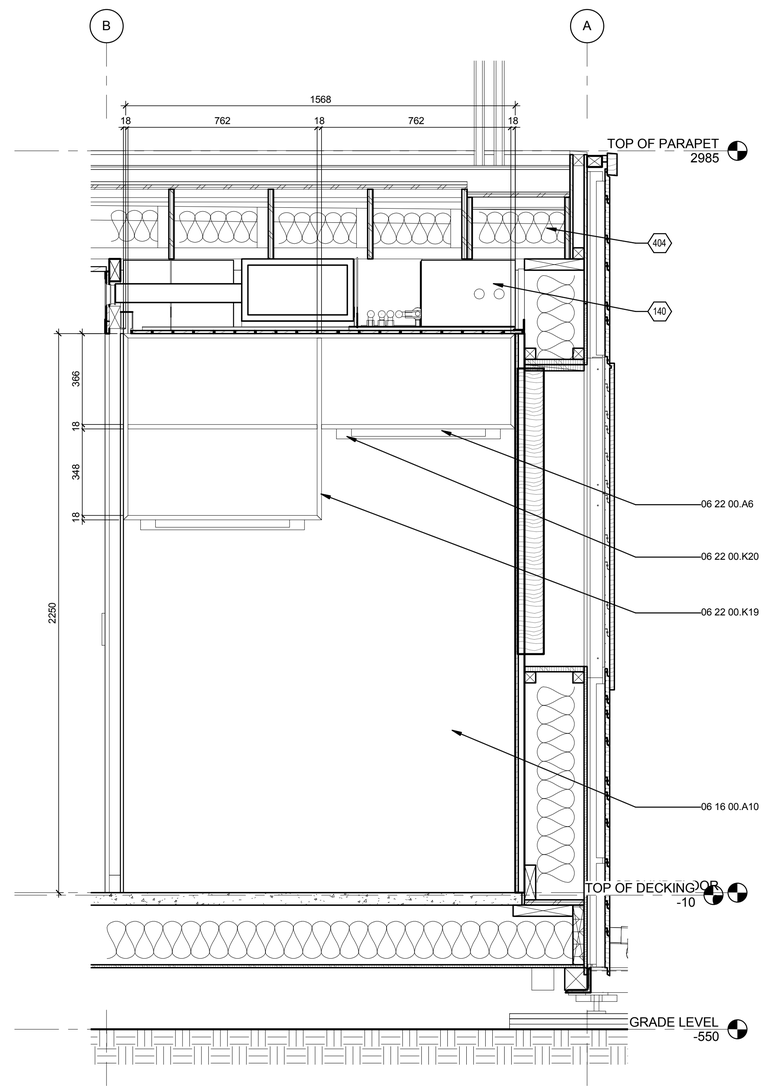

A4 LAUNDRY ELEVATION - WEST
1 : 12

0 1/2' 1' 2'

GENERAL SHEET NOTES

REFERENCE KEYNOTES

06 16 00.A10	12MM ECOPLY LINING NAIL FIXED AT 75MM CENTRES
06 22 00.A2	WASHING MACHINE CABINET
06 22 00.A6	WARDROBE / STORAGE UNIT
06 22 00.K19	18MM MDF WITH 'RIMU HEART' VENEER. RIMU EDGE TAPE APPLIED TO FRONT EDGE
06 22 00.K20	ALUMINIUM BAR FIXED TO JOINERY UNIT TO CREATE HANGING SPACE

SHEET KEYNOTES

140	SERVICES BULKHEAD
404	INSULATION SHOWN INDICATIVE ONLY. REFER DETAIL DRAWINGS AND SPECIFICATION FOR LOCATION, EXTENT AND TYPES
406	25MM GAP BETWEEN WASHING MACHINE CABINET AND WALL. CONFIRM WITH MANUFACTURER TOLERANCE REQUIRED FOR CABINET DOOR

FIRST LIGHT NZ

TEAM NAME:	FIRST LIGHT
ADDRESS:	139 VIVIAN STREET TE ARO, WELLINGTON NEWZEALAND
CONTACT:	ELINUTTALL@GMAIL.COM WWW.FIRSTLIGHTHOUSE.AC.NZ

CONSULTANTS

TENNENT + BROWN ARCHITECTS

DUNNING THORNTON CONSULTANTS LTD

LEAP AUSTRALASIA LTD

SOUTHERN PERSPECTIVES / SOLAR CITY

CLIENT

U.S. DEPARTMENT OF ENERGY

SOLAR DECATHLON 2011

WWW.SOLARDECATHLON.GOV

U.S. DEPARTMENT OF ENERGY SOLAR DECATHLON

MARK	DATE	DESCRIPTION
CN	11-01-11	FOR CONSTRUCTION

LOT NUMBER:	LOT NUMBER
DRAWN BY:	Author
CHECKED BY:	Checker
COPYRIGHT:	

SHEET TITLE

LAUNDRY ELEVATIONS

I-462

8/13/2011 8:35:36 AM

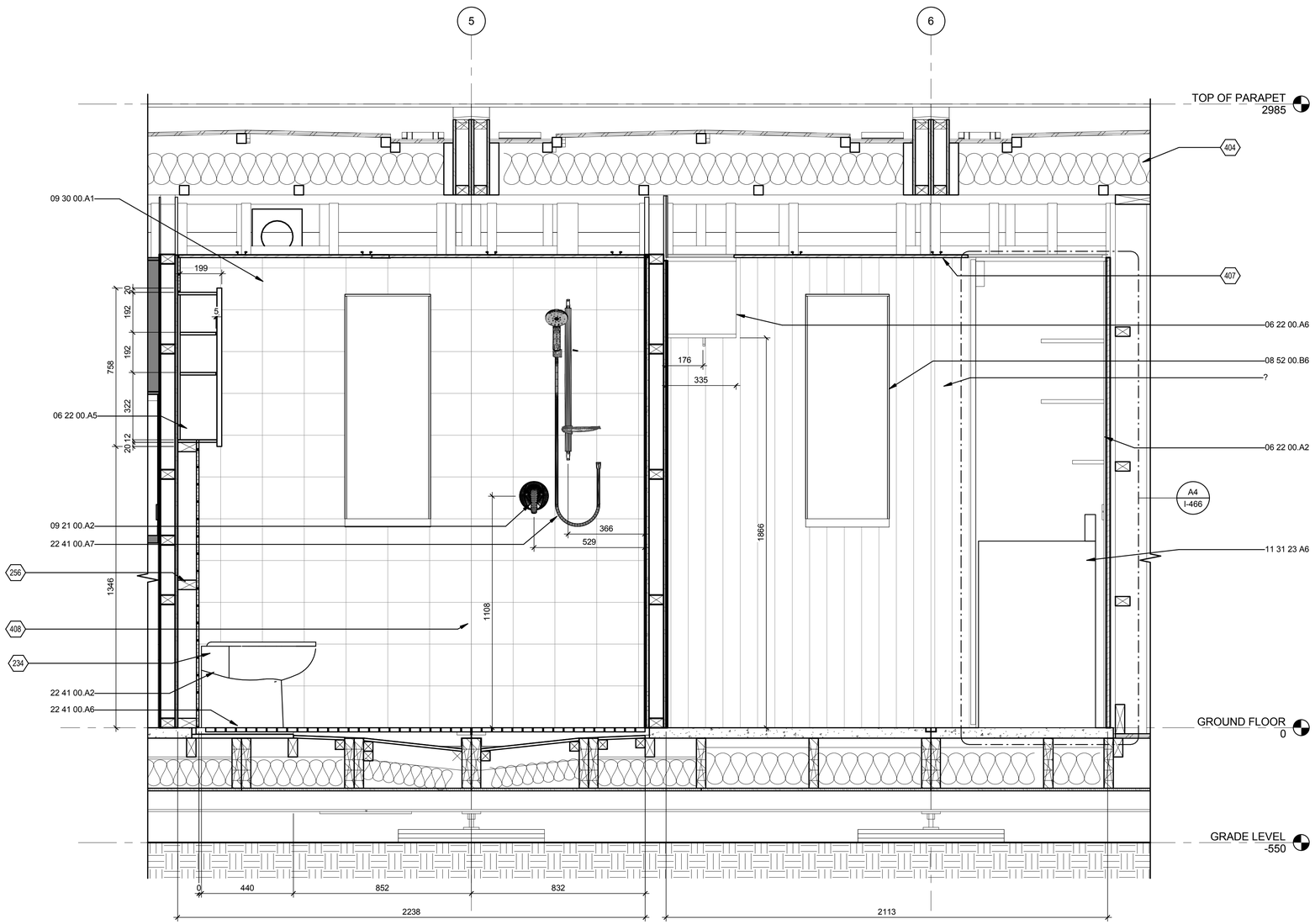

A1 BATHROOM & LINEN SECTION - NORTH

1 : 12

0 2' 4' 8'

GENERAL SHEET NOTES

REFERENCE KEYNOTES

06 22 00.A2	WASHING MACHINE CABINET
06 22 00.A5	BATHROOM CABINET WITH 1150MM LED BAR MOUNTED ABOVE AND BELOW. REFER DETAIL DRAWINGS
06 22 00.A6	WARDROBE / STORAGE UNIT
06 40 23.A1	83X12MM HORIZONTAL TONGUE & GROOVE RIMU TIMBER BOARD INTERIOR LINNING.
08 52 00.B6	
09 21 00.A2	200 X 200MM ETCHLITE BACKPAINTED GLASS TILES OVER WPM ON 12MM COMPRESSED FIBRE CEMENT SHEET SUBSTRATE
09 30 00.A1	
11 31 23 A6	FISHER & PAYKEL TOP LOADING WASHING MACHINE MODEL WA55T56GW. 1020H X 560W X 560D. REFER MANUFACTURERS INSTRUCTIONS FOR INSTALLATION DETAILS
22 41 00.A2	IMEX CB-1088 ARCO BACK-TO-WALL TOILET PAN WITH FULLY FRAMED 'WATERMARK' DUAL FLUSH IN-WALL CISTERN. REFER MANUFACTURERS SPECIFICATIONS FOR INSTALLATION DETAILS
22 41 00.A6	THREE PART MERCER STAINLESS STEEL SHOWER TRAY UNDER DUCKBOARD SYSTEM. SHOWER TRAY CROSSES AND WATERPROOFS MODULE JOIN. REMOVEABLE HARDWOOD TIMBER DUCKBOARDS SIT OVER TRAY
22 41 00.A7	METHVEN KIRI SATINJET SHOWER SYSTEM WITH OVERHEAD RAINSHOWER COLUMN

SHEET KEYNOTES

234	WC NOT CONNECTED TO MAIN DRAIN AND CAPPED FOR PURPOSES OF THE COMPETITION
256	WALL BUILT OUT 90MM TO ACCOMODATE PIPEWORK & IN-WALL CISTERN UP TO LEVEL OF CABINETRY
404	INSULATION SHOWN INDICATIVE ONLY. REFER DETAIL DRAWINGS AND SPECIFICATION FOR LOCATION, EXTENT AND TYPES
407	REMOVEABLE RIMU T&G CEILING PANELS TO ALL CEILINGS THROUGH BUILDING CORE - REFER INTERIOR DRAWING SET FOR DETAILS AND SETOUT
408	REMOVEABLE SECTION OF WALL TILES AT MODULE JOIN. REFER DRAWING A-513 FOR CONSTRUCTION DETAILS

FIRST LIGHT NZ

TEAM NAME:	FIRSTLIGHT NZ
ADDRESS:	139 VIVIAN STREET TE ARO, WELLINGTON NEWZEALAND
CONTACT:	INFO@FIRSTLIGHTHOUSE.AC.NZ WWW.FIRSTLIGHTHOUSE.AC.NZ

CONSULTANTS

TENNENT + BROWN ARCHITECTS

DUNNING THORNTON CONSULTANTS LTD

LEAP AUSTRALASIA LTD

SOUTHERN PERSPECTIVES / SOLAR CITY

CLIENT

U.S. DEPARTMENT OF ENERGY

SOLAR DECATHLON 2011

WWW.SOLARDECATHLON.GOV

U.S. DEPARTMENT OF ENERGY SOLAR DECATHLON

CN	11-01-11	FOR CONSTRUCTION

MARK	DATE	DESCRIPTION

LOT NUMBER:	LOT NUMBER
DRAWN BY:	Author
CHECKED BY:	Checker
COPYRIGHT:	VICTORIA UNIVERSITY

SHEET TITLE

BATHROOM & LAUNDRY SECTION - NORTH

I-463

8/13/2011 8:35:45 AM

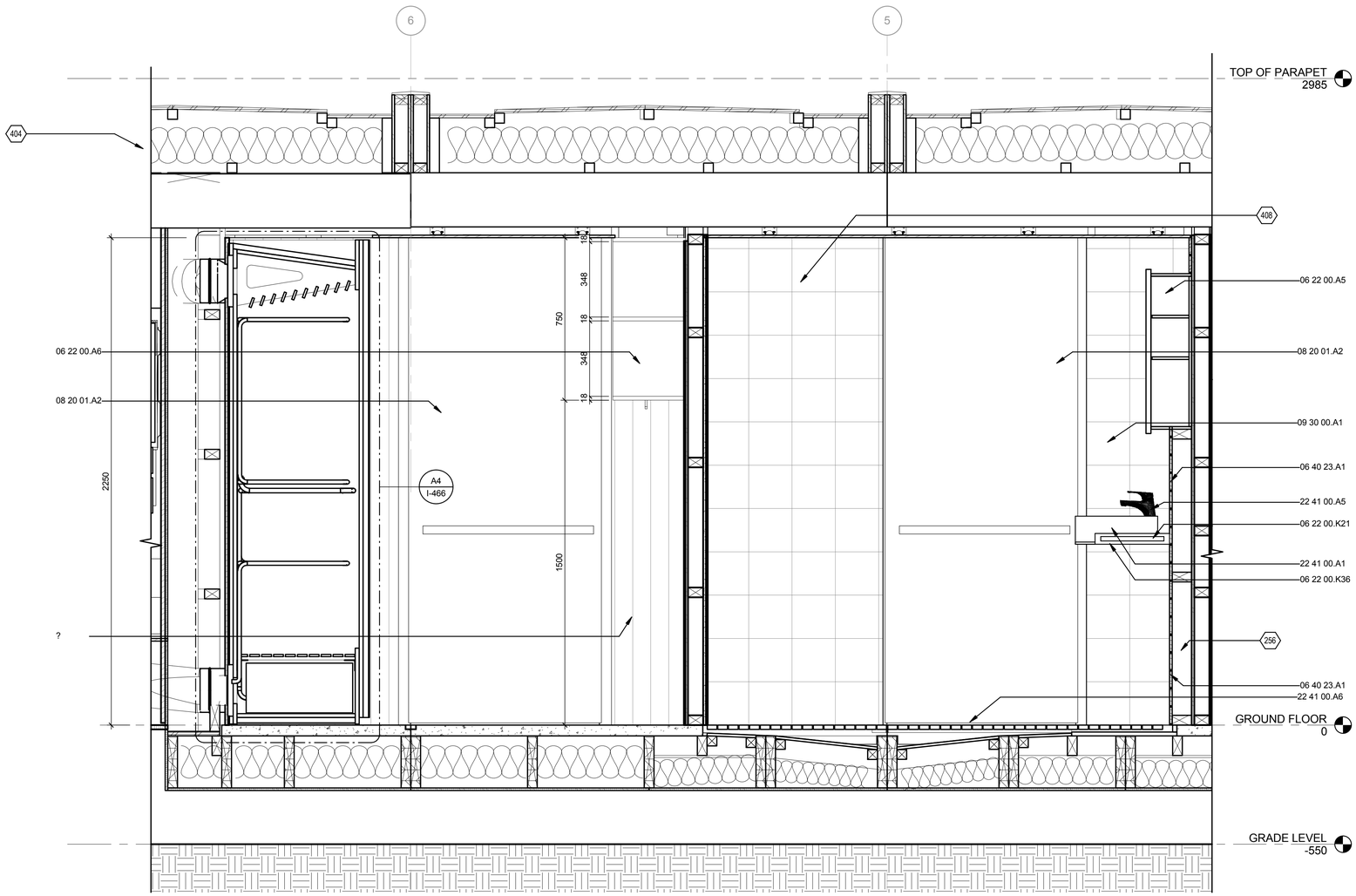

A1 BATHROOM & LAUNDRY SECTION - SOUTH
1 : 12

0 1/2' 1' 2'

GENERAL SHEET NOTES

REFERENCE KEYNOTES

06 22 00.A5	BATHROOM CABINET WITH 1150MM LED BAR MOUNTED ABOVE AND BELOW. REFER DETAIL DRAWINGS
06 22 00.A6	WARDROBE / STORAGE UNIT
06 22 00.K21	HETTICH PRO DECOR HANDLE 045637 TOWEL RAIL TO SIDE OF VANITY UNIT
06 22 00.K36	VANITY UNIT FIXED TO WALL FRAMING AT SOUTH AND NW EDGE WITH 50 X 10MM STEEL ANGLES
06 40 23.A1	83X12MM HORIZONTAL TONGUE & GROOVE RIMU TIMBER BOARD INTERIOR LINNING.
08 20 01.A2	10MM TOP HUNG FLOOR TO CEILING TOUGHENED GLASS FACE-SLIDER. ACID ETCHED ON SOUTH FACE. DORMA AGILE 150 SLIDING DOOR SYSTEM
09 30 00.A1	
22 41 00.A1	380 X 380 X 130MM TRENZ SEMI RECESSED BASIN. MODEL 4148-C
22 41 00.A5	METHVEN FUTURA BASIN MIXER
22 41 00.A6	THREE PART MERCER STAINLESS STEEL SHOWER TRAY UNDER DUCKBOARD SYSTEM. SHOWER TRAY CROSSES AND WATERPROOFS MODULE JOIN. REMOVEABLE HARDWOOD TIMBER DUCKBOARDS SIT OVER TRAY

SHEET KEYNOTES

256	WALL BUILT OUT 90MM TO ACCOMODATE PIPEWORK & IN-WALL CISTERN UP TO LEVEL OF CABINETRY
404	INSULATION SHOWN INDICATIVE ONLY. REFER DETAIL DRAWINGS AND SPECIFICATION FOR LOCATION, EXTENT AND TYPES
408	REMOVEABLE SECTION OF WALL TILES AT MODULE JOIN. REFER DRAWING A-513 FOR CONSTRUCTION DETAILS

FIRST LIGHT NZ

TEAM NAME: FIRSTLIGHT NZ
ADDRESS: 139 VIVIAN STREET TE ARO, WELLINGTON NEWZEALAND
CONTACT: INFO@FIRSTLIGHTHOUSE.AC.NZ WWW.FIRSTLIGHTHOUSE.AC.NZ

CONSULTANTS

TENNENT + BROWN ARCHITECTS
DUNNING THORNTON CONSULTANTS LTD
LEAP AUSTRALASIA LTD
SOUTHERN PERSPECTIVES / SOLAR CITY

CLIENT

U.S. DEPARTMENT OF ENERGY
SOLAR DECATHLON 2011
WWW.SOLARDECATHLON.GOV

U.S. DEPARTMENT OF ENERGY SOLAR DECATHLON

MARK	DATE	DESCRIPTION
CN	11-01-11	FOR CONSTRUCTION

LOT NUMBER:	LOT NUMBER
DRAWN BY:	Author
CHECKED BY:	Checker
COPYRIGHT:	VICTORIA UNIVERSITY

SHEET TITLE

BATHROOM & LAUNDRY SECTION SOUTH

I-464

8/13/2011 8:35:51 AM

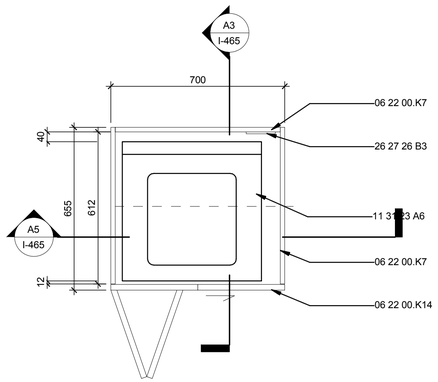

D1 LAUNDRY CABINET - PLAN
1 : 12

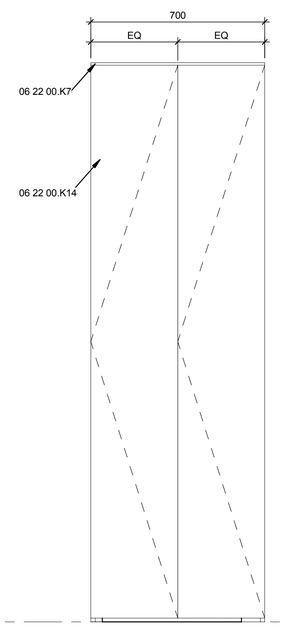

A1 LAUNDRY CABINET - FRONT ELEVATION
1 : 12

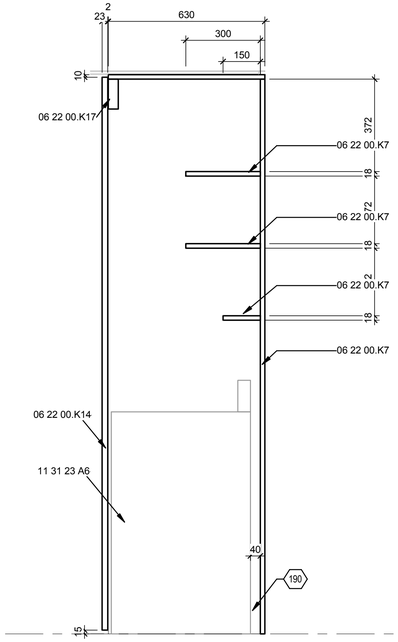

A3 LAUNDRY CABINET - SECTION 1
1 : 12

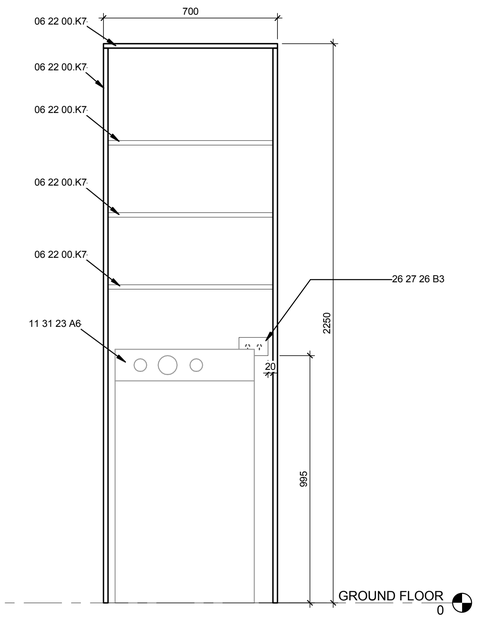

A5 LAUNDRY CABINET - SECTION 2
1 : 12

0 1" 2"

GENERAL SHEET NOTES

REFERENCE KEYNOTES

06 22 00.K7	STRUCTURAL FRAMES TO BE 18MM PLYWOOD - MITRED AT EDGES
06 22 00.K14	18MM PLYWOOD WITH 5MM MIRROR GLASS TO EXTERIOR FACE
06 22 00.K17	HETTICH WING LINE 770 FOLDING DOOR GEAR FIXED TO TOP PANEL OF CABINET. DOORS SUPPORTED BY TOP RAIL ONLY
11 31 23 A6	FISHER & PAYKEL TOP LOADING WASHING MACHINE MODEL WA55T56GW. 1020H X 560W X 560D. REFER MANUFACTURERS INSTRUCTIONS FOR INSTALLATION DETAILS
26 27 26 B3	PDL 600 SLIMLINE SERIES DOUBLE HORIZONTAL POWER SOCKETS POSITIONED AS SHOWN

SHEET KEYNOTES

190	40MM REQUIRED BETWEEN WASHING MACHINE AND BACK OF CABINET - REFER MANUFACTURERS INFORMATION FOR INSTALLATION DETAILS

FIRST LIGHT NZ

TEAM NAME:	FIRST LIGHT
ADDRESS:	139 VIVIAN STREET TE ARO, WELLINGTON NEWZEALAND
CONTACT:	ELINUTTALL@GMAIL.COM WWW.FIRSTLIGHTHOUSE.AC.NZ

CONSULTANTS

TENNENT + BROWN ARCHITECTS
DUNNING THORNTON CONSULTANTS LTD
LEAP AUSTRALASIA LTD
SOUTHERN PERSPECTIVES / SOLAR CITY

CLIENT
U.S. DEPARTMENT OF ENERGY
SOLAR DECATHLON 2011
WWW.SOLARDECATHLON.GOV

U.S. DEPARTMENT OF ENERGY SOLAR DECATHLON

MARK	DATE	DESCRIPTION
CN	11-01-11	FOR CONSTRUCTION

LOT NUMBER:	LOT NUMBER
DRAWN BY:	Author
CHECKED BY:	Checker
COPYRIGHT:	

SHEET TITLE
WASHING MACHINE CABINET

I-465

8/13/2011 8:35:55 AM

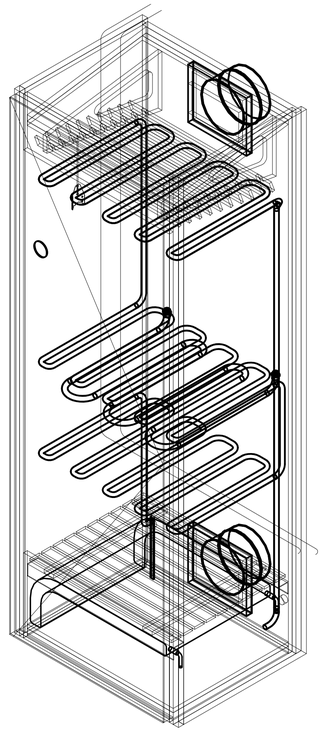

C1 HYDRONIC DRYER WIREFRAME ISOMETRIC

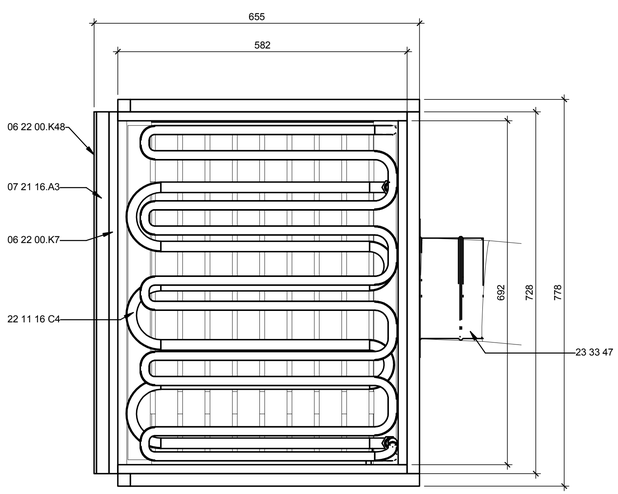

A1 HYDRONIC DRYER PLAN
1 : 6

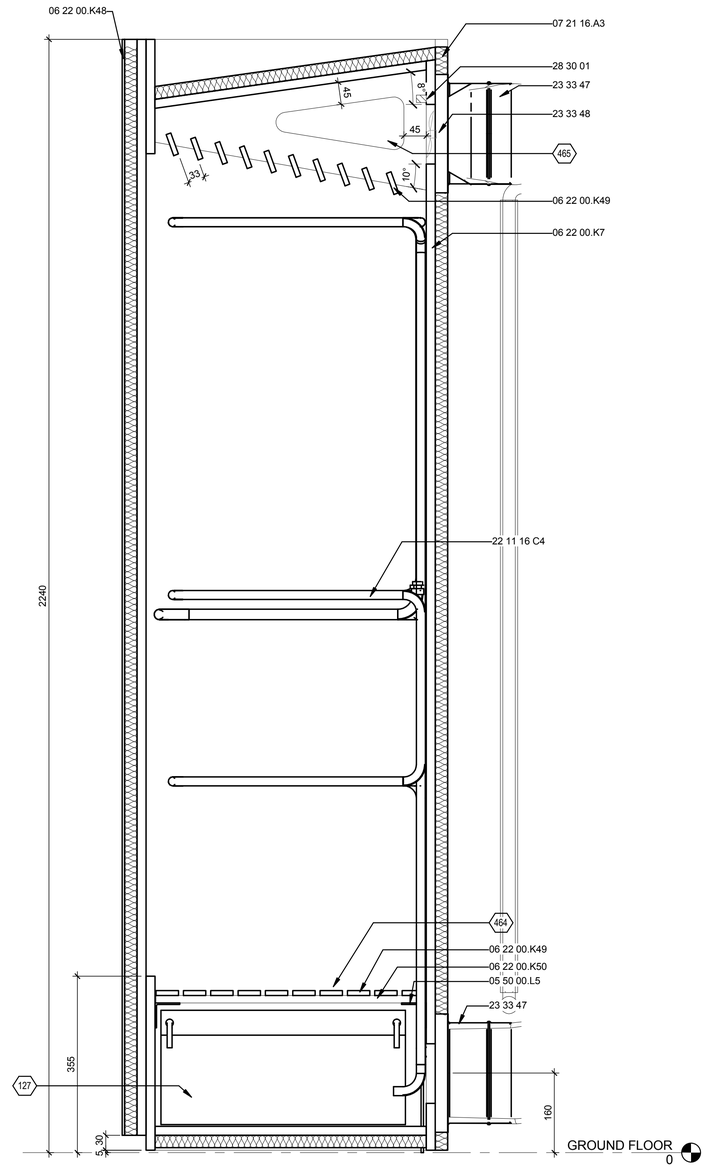

A4 HYDRONIC DRYER SECTION
1 : 6

GENERAL SHEET NOTES

REFERENCE KEYNOTES

05 50 00.L5	CHEQUERPLATE TO ENDS OF RAMP
06 22 00.K7	STRUCTURAL FRAMES TO BE 18MM PLYWOOD - MITRED AT EDGES
06 22 00.K48	5MM MIRROR GLASS TO DOOR FRONT
06 22 00.K49	45 X 10MM TIMBER SLATS
06 22 00.K50	45 X 15MM TIMBER BATTENS
07 21 16.A3	30MM SOLID INSULATION TO FULL EXTENT OF CABINET
22 11 16 C4	
23 33 47	
23 33 48	
28 30 01	

SHEET KEYNOTES

127	PLATFORM TO ACT AS BUNK BED/KIDS' TV-VIEWING SEAT WHEN BIFOLDS ARE OPEN
464	TRIM 25MM FLANGE OFF BI-FOLD SILL TO ACHIEVE FLUSH PROFILE AS SHOWN
465	PLYWOOD BLOCKING TO OBTAIN CORRECT WINDOW HEAD REVEAL HEIGHT

FIRST LIGHT NZ

TEAM NAME:	FIRST LIGHT
ADDRESS:	139 VIVIAN STREET TE ARO, WELLINGTON NEWZEALAND
CONTACT:	ELINUTTALL@GMAIL.COM WWW.FIRSTLIGHTHOUSE.AC.NZ

CONSULTANTS

TENNENT + BROWN ARCHITECTS
DUNNING THORNTON CONSULTANTS LTD
LEAP AUSTRALASIA LTD
SOUTHERN PERSPECTIVES / SOLAR CITY

CLIENT

U.S. DEPARTMENT OF ENERGY
SOLAR DECATHLON 2011
WWW.SOLARDECATHLON.GOV

U.S. DEPARTMENT OF ENERGY SOLAR DECATHLON

MARK	DATE	DESCRIPTION
CN	11-01-11	FOR CONSTRUCTION

LOT NUMBER:	LOT NUMBER
DRAWN BY:	Author
CHECKED BY:	Checker
COPYRIGHT:	

SHEET TITLE

HYDRONIC DRYER

I-466

8/13/2011 8:36:02 AM

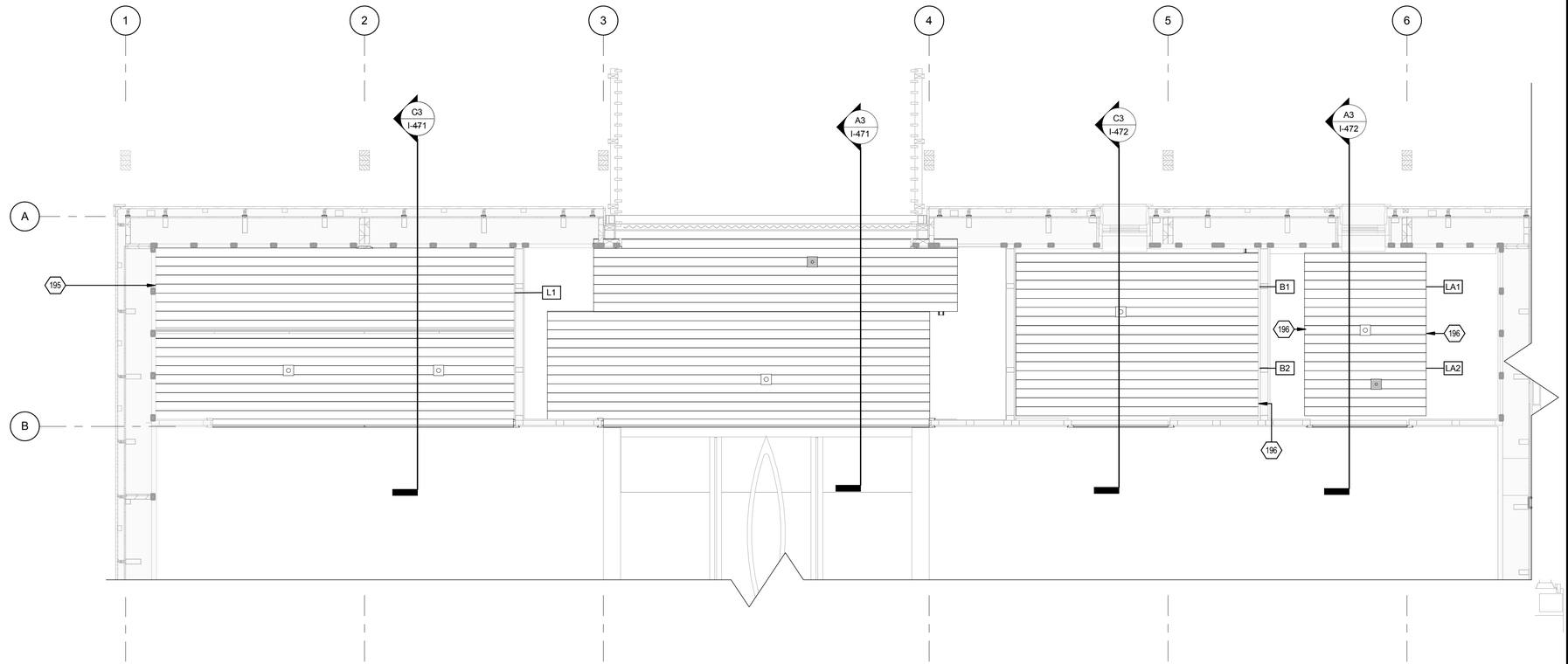

C1 REMOVEABLE CEILING KEY PLAN
1 : 24

GENERAL SHEET NOTES

1. SEE ARCHITECTURAL DRAWING SET FOR OVERALL REFLECTED CEILING PLAN

REFERENCE KEYNOTES

SHEET KEYNOTES

195	EDGES OF REMOVABLE CEILING TO OVERLAP INSIDE FACE OF INTERIOR LINING BY 6MM EACH SIDE.
196	EDGES OF REMOVABLE CEILING TO OVERLAP INSIDE FACE OF PERMANENTLY INSTALLED CABINETRY BY 6MM

FIRST LIGHT NZ

TEAM NAME:	FIRST LIGHT
ADDRESS:	139 VIVIAN STREET TE ARO, WELLINGTON NEWZEALAND
CONTACT:	ELINUTTALL@GMAIL.COM WWW.FIRSTLIGHTHOUSE.AC.NZ

CONSULTANTS

TENNENT + BROWN ARCHITECTS
DUNNING THORNTON CONSULTANTS LTD
LEAP AUSTRALASIA LTD
SOUTHERN PERSPECTIVES / SOLAR CITY

CLIENT

U.S. DEPARTMENT OF ENERGY
SOLAR DECATHLON 2011
WWW.SOLARDECATHLON.GOV

U.S. DEPARTMENT OF ENERGY SOLAR DECATHLON

MARK	DATE	DESCRIPTION
CN	11-01-11	FOR CONSTRUCTION

LOT NUMBER:	LOT NUMBER
DRAWN BY:	Author
CHECKED BY:	Checker
COPYRIGHT:	

SHEET TITLE

REMOVABLE CEILING PANELS PLAN

I-470

8/13/2011 8:36:07 AM

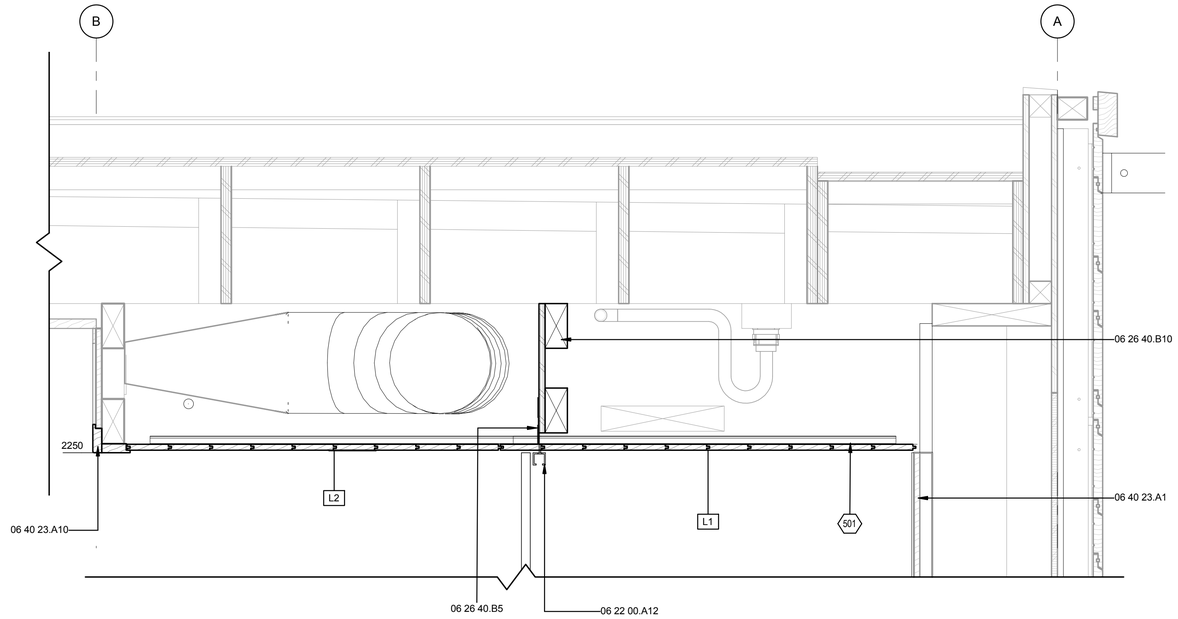

C3 CEILING SECTION - LOUNGE UNIT

1 : 6

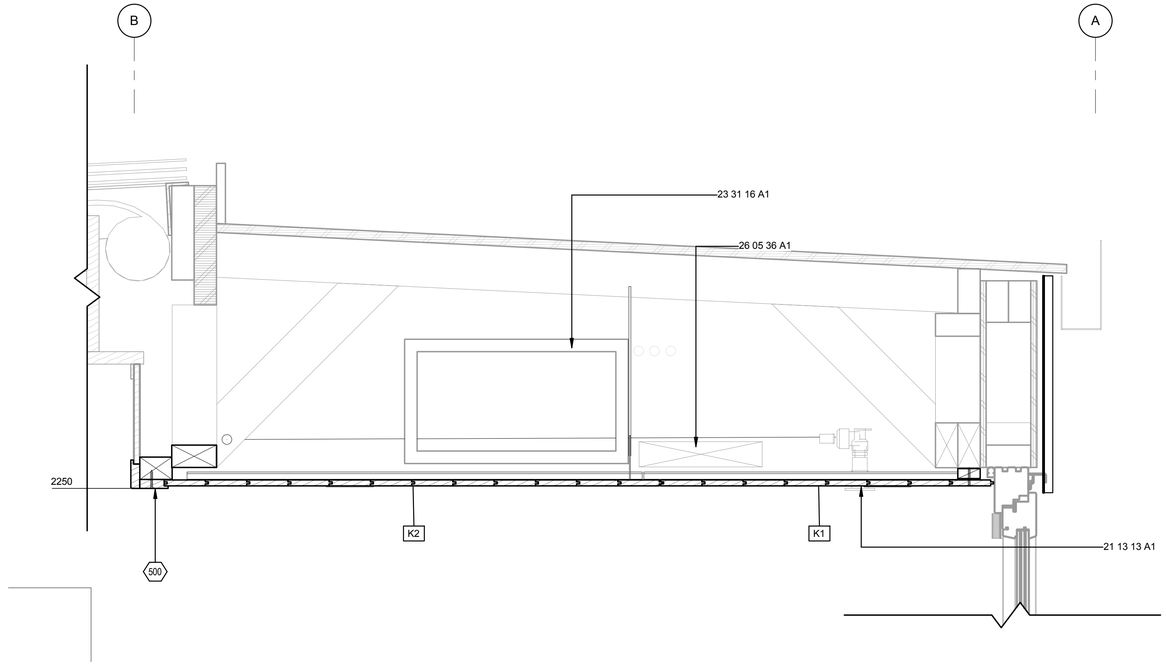

A3 CEILING SECTION - KITCHEN

1 : 6

REFERENCE KEYNOTES

06 22 00.A12	LIVING ROOM JOINERY - BIFOLD DOORS. TRACK GEAR FIXED ON-SITE. BOTTOM TRACK FIXED TO BUNK SHELVING UNIT, TOP TRACK TO CEILING.
06 26 40.B5	VERTICALLY ADJUSTABLE PROPRIETARY METAL CLIPS TO CEILING BATTENS SUSPENDED FROM ROOF STRUCTURE ABOVE
06 26 40.B10	PLYWOOD AND TIMBER BLOCKING SUSPENDED FROM ROOF STRUCTURE ABOVE TO SUPPORT DOOR TRACK AND REMOVABLE CEILINGS. BLOCKING BROKEN AT MODULE JOINS.
06 40 23.A1	83X12MM HORIZONTAL TONGUE & GROOVE RIMU TIMBER BOARD INTERIOR LINNING.
06 40 23.A10	EX 57X18MM INTERIOR TIMBER TRIM TO OPENINGS
21 13 13 A1	RECESSED SINJU SPRINKLER HEAD
23 31 16 A1	PREMIER FOAMBOARD DUCTING
26 05 36 A1	200MM X 30MM UNISTRUT BASKET TRAY

SHEET KEYNOTES

500	INSTALLATION SEQUENCE FOR KITCHEN CEILINGS: INSTALL COVERBOARD UNIT TO BULKHEAD AND SCREW FIX TO BLOCKING. SUPPORT UNIT K2 ON EDGE OF COVERBOARD AND CLIP BATTENS AT OTHER END TO SUSPENDED CLIP. SUPPORT UNIT K1 ON UNIT K2 FROM BATTENS AND SCREW FIX TO TIMBER FRAMING ADJACENT TO BIFOLD DOORS
501	INSTALLATION SEQUENCE FOR LOUNGE CEILINGS: INSTALL UNIT L1, SUPPORTING OUTER EDGE ON WALL LINING AND OTHER END TO CEILING BATTEN CLIP ATTACHED TO PLYWOOD LINTEL. SUPPORT UNIT L2 ON L1 VIA BATTENS AND SCREW FIX ARCHITRAVE TO BULKHEAD LINTEL TO SUPPORT UNIT L2.

FIRST LIGHT NZ

TEAM NAME: FIRST LIGHT

ADDRESS: 139 VIVIAN STREET
TE ARO, WELLINGTON
NEWZEALAND

CONTACT: ELINUTTALL@GMAIL.COM
WWW.FIRSTLIGHTHOUSE.AC.NZ

CONSULTANTS

TENNENT + BROWN ARCHITECTS
DUNNING THORNTON CONSULTANTS LTD
LEAP AUSTRALASIA LTD
SOUTHERN PERSPECTIVES / SOLAR CITY

CLIENT

U.S. DEPARTMENT OF ENERGY
SOLAR DECATHLON 2011
WWW.SOLARDECATHLON.GOV

U.S. DEPARTMENT OF ENERGY SOLAR DECATHLON

MARK	DATE	DESCRIPTION
CN	11-01-11	FOR CONSTRUCTION

LOT NUMBER: LOT NUMBER
DRAWN BY: Author
CHECKED BY: Checker
COPYRIGHT:

SHEET TITLE

REMOVEABLE CEILING ASSEMBLY- SECTIONS

I-471

8/13/2011 8:36:14 AM

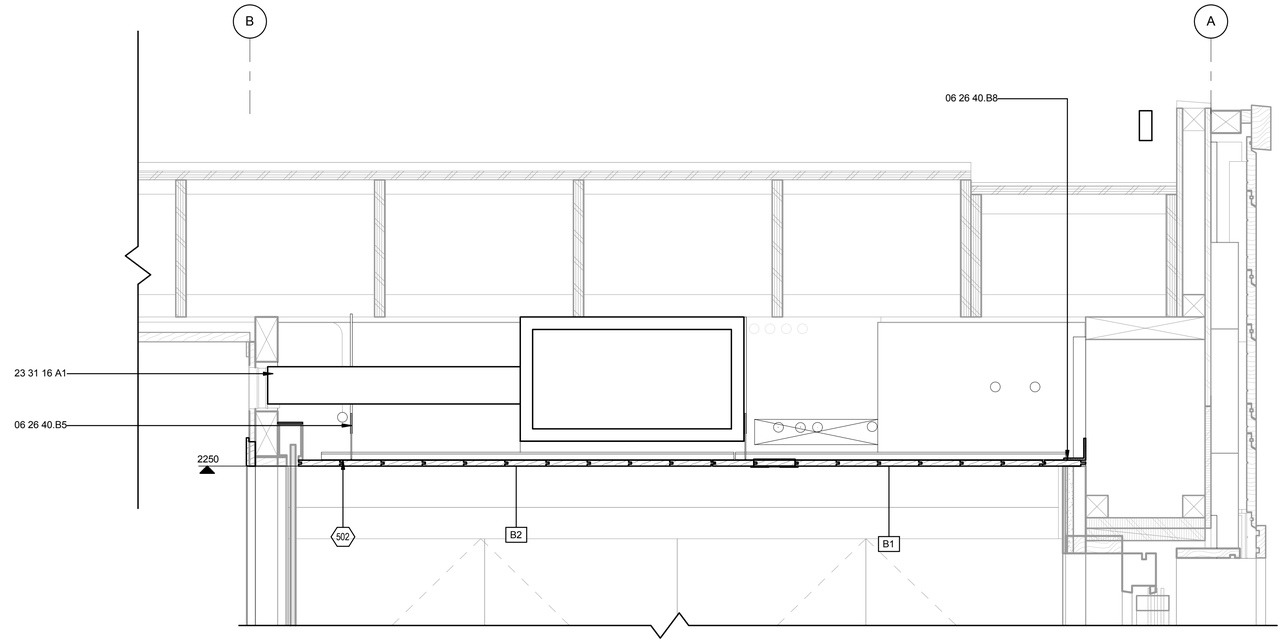

C3 CEILING SECTION - BATHROOM
1 : 6

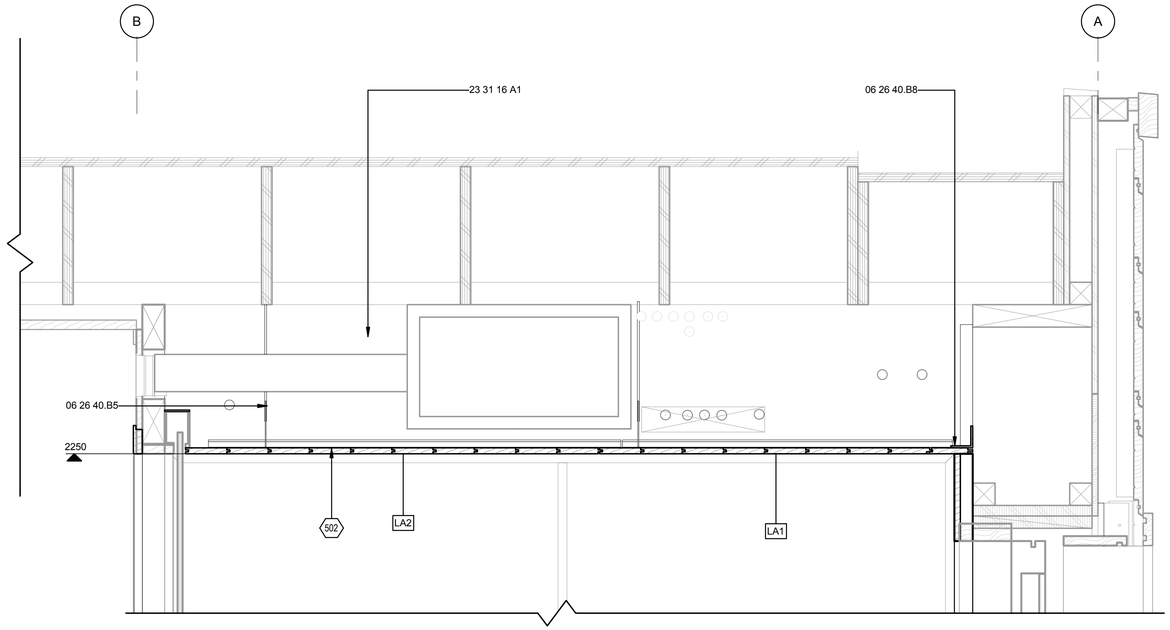

A3 CEILING SECTION - LAUNDRY
1 : 6

REFERENCE KEYNOTES

06 26 40.B5	VERTICALLY ADJUSTABLE PROPRIETARY METAL CLIPS TO CEILING BATTENS SUSPENDED FROM ROOF STRUCTURE ABOVE
06 26 40.B8	CEILING PANEL EDGE SUPPORT: 83 X 12 TOUNGE & GROOVE RIMU BOARD SUPPORTED BY 30 X 30 X 3 ALUMINIUM ANGLE SCREW FIXED TO WALL STRUCTURE
23 31 16 A1	PREMIER FOAMBOARD DUCTING

SHEET KEYNOTES

502	INSTALLATION SEQUENCE FOR BATHROOM AND LAUNDRY CEILINGS: SUPPORT UNIT B2 FROM SUSPENDED CEILING BATTEN CLIPS AT BOTH ENDS. SUPPORT UNIT B1 FROM UNIT B2 VIA BATTENS AND AT OTHER END ON CEILING EDGE SUPPORT.

FIRST LIGHT NZ

TEAM NAME:	FIRST LIGHT
ADDRESS:	139 VIVIAN STREET TE ARO, WELLINGTON NEWZEALAND
CONTACT:	ELINUTTALL@GMAIL.COM WWW.FIRSTLIGHTHOUSE.AC.NZ

CONSULTANTS

TENNENT + BROWN ARCHITECTS
DUNNING THORNTON CONSULTANTS LTD
LEAP AUSTRALASIA LTD
SOUTHERN PERSPECTIVES / SOLAR CITY

CLIENT

U.S. DEPARTMENT OF ENERGY
SOLAR DECATHLON 2011
WWW.SOLARDECATHLON.GOV

U.S. DEPARTMENT OF ENERGY SOLAR DECATHLON

MARK	DATE	DESCRIPTION
CN	11-01-11	FOR CONSTRUCTION

LOT NUMBER:	LOT NUMBER
DRAWN BY:	Author
CHECKED BY:	Checker
COPYRIGHT:	

SHEET TITLE

REMOVABLE CEILING ASSEMBLY- SECTIONS

I-472

8/13/2011 8:36:18 AM

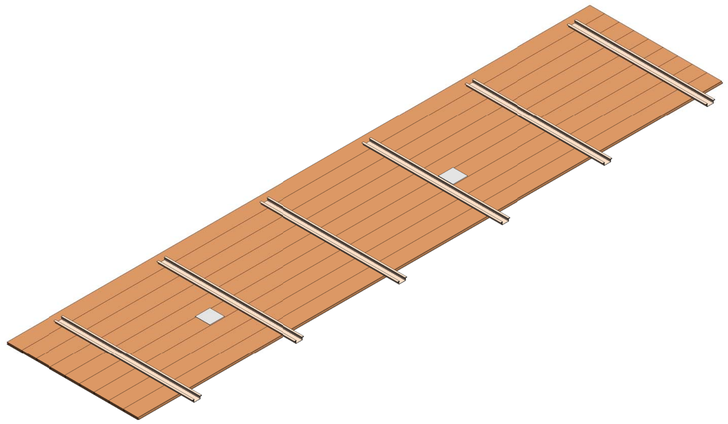

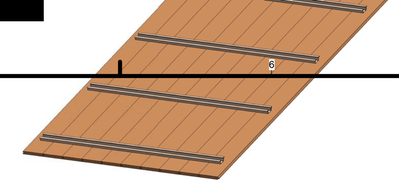

REFERENCE KEYNOTES

06 26 40.A1	83X12MM TOUNGE AND GROOVE RIMU BOARDS NAIL FIXED THROUGH TOUNGE TO METAL BATTEN
06 26 40.A2	PROPRIETARY METAL CEILING BATTENS AT 800MM CENTRES MAX
06 26 40.B3	83X83MM CUTOUT IN RIMU T&G BOARD AND NEIGHBOURING TOUNGE FOR 12W LED LIGHT FITTING

SHEET KEYNOTES

195	EDGES OF REMOVABLE CEILING TO OVERLAP INSIDE FACE OF INTERIOR LINING BY 6MM EACH SIDE.

D1 CEILING PANEL L2 ISOMETRIC

D4 CEILING PANEL L1 ISOMETRIC

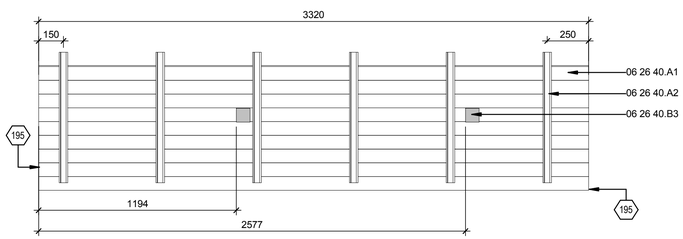

C1 CEILING PANEL L2 - PLAN
1 : 18

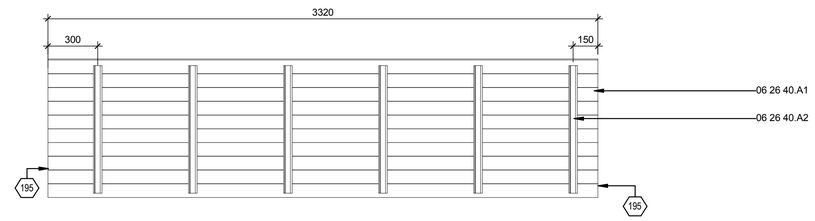

C4 CEILING PANEL L1 - PLAN
1 : 18

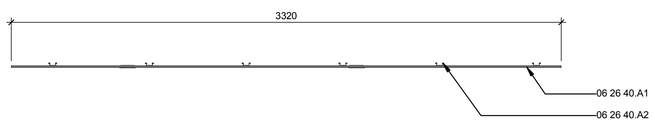

B1 CEILING PANEL L2 - SIDE ELEVATION
1 : 18

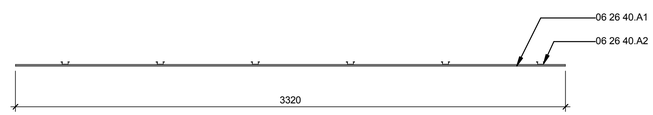

B4 CEILING PANEL L1 - SIDE ELEVATION
1 : 18

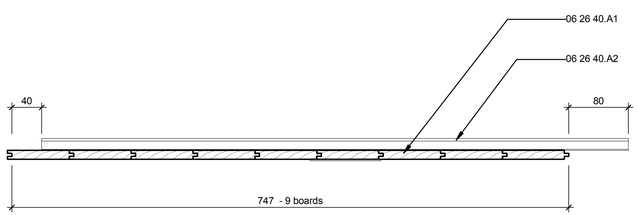

A1 CEILING PANEL L2 - SECTION
1 : 4

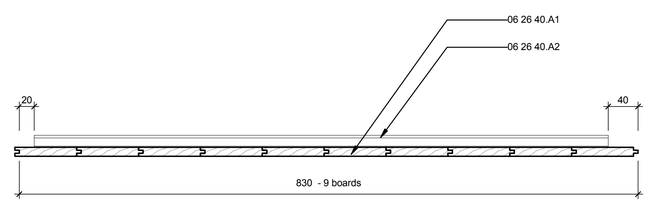

A4 CEILING PANEL L1 - SECTION
1 : 4

FIRST LIGHT NZ

TEAM NAME:	FIRST LIGHT
ADDRESS:	139 VIVIAN STREET TE ARO, WELLINGTON NEWZEALAND
CONTACT:	ELINUTTALL@GMAIL.COM WWW.FIRSTLIGHTHOUSE.AC.NZ

CONSULTANTS

TENNENT + BROWN ARCHITECTS
DUNNING THORNTON CONSULTANTS LTD
LEAP AUSTRALASIA LTD
SOUTHERN PERSPECTIVES / SOLAR CITY

CLIENT

U.S. DEPARTMENT OF ENERGY
SOLAR DECATHLON 2011
WWW.SOLARDECATHLON.GOV

U.S. DEPARTMENT OF ENERGY SOLAR DECATHLON

MARK	DATE	DESCRIPTION
CN	11-01-11	FOR CONSTRUCTION

LOT NUMBER:	LOT NUMBER
DRAWN BY:	Author
CHECKED BY:	Checker
COPYRIGHT:	

SHEET TITLE

REMOVABLE CEILING PANELS - LOUNGE

I-473

8/13/2011 8:36:30 AM

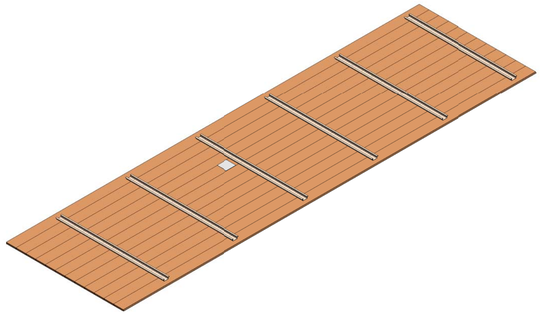

D1 CEILING PANEL K2 ISOMETRIC

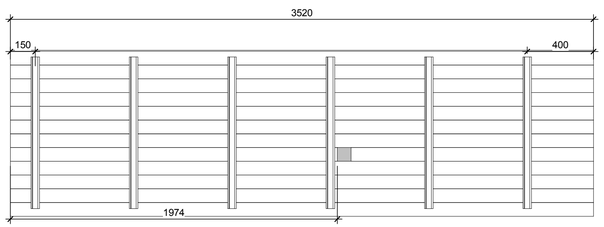

C1 CEILING PANEL K2 - PLAN
1 : 18

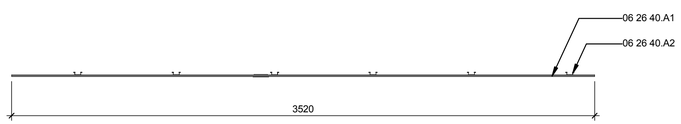

B1 CEILING PANEL K2 - SIDE ELEVATION
1 : 18

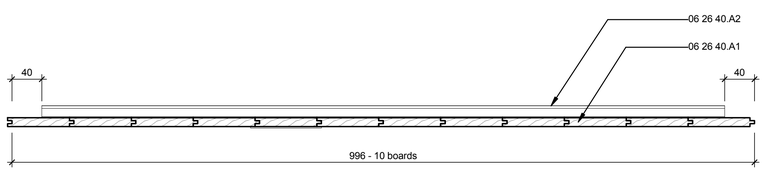

A1 CEILING PANEL K2 - SECTION
1 : 4

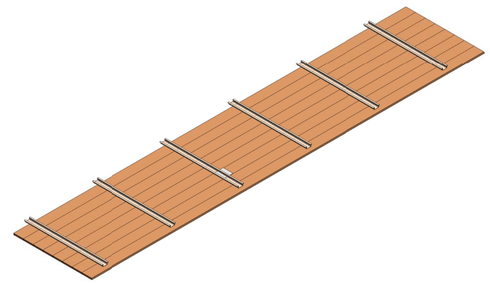

D4 CEILING PANEL K1 ISOMETRIC

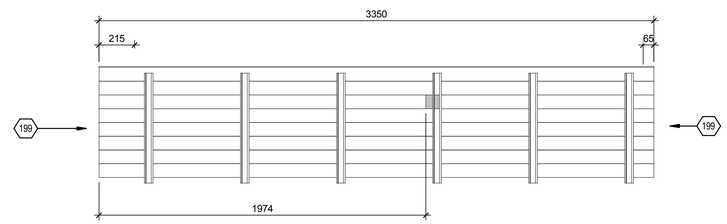

C4 CEILING PANEL K1 - PLAN
1 : 18

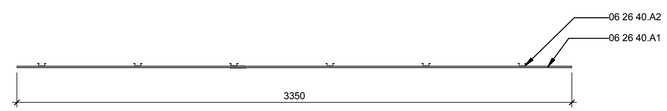

B4 CEILING PANEL K1 - SIDE ELEVATION
1 : 18

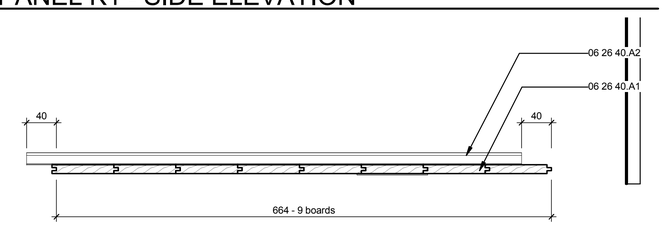

A4 CEILING PANEL K1 - SECTION
1 : 4

REFERENCE KEYNOTES

06 26 40.A1	83X12MM TOUNGE AND GROOVE RIMU BOARDS NAIL FIXED THROUGH TOUNGE TO METAL BATTEN
06 26 40.A2	PROPRIETARY METAL CEILING BATTENS AT 800MM CENTRES MAX

SHEET KEYNOTES

199	EDGES OF REMOVABLE CEILING TO OVERLAP INSIDE FACE OF PERMANENTLY INSTALLED CABINETRY BY 10MM

FIRST LIGHT NZ

TEAM NAME:	FIRST LIGHT
ADDRESS:	139 VIVIAN STREET TE ARO, WELLINGTON NEWZEALAND
CONTACT:	ELINUTTALL@GMAIL.COM WWW.FIRSTLIGHTHOUSE.AC.NZ

CONSULTANTS

TENNENT + BROWN ARCHITECTS
DUNNING THORNTON CONSULTANTS LTD
LEAP AUSTRALASIA LTD
SOUTHERN PERSPECTIVES / SOLAR CITY

CLIENT

U.S. DEPARTMENT OF ENERGY
SOLAR DECATHLON 2011
WWW.SOLARDECATHLON.GOV

U.S. DEPARTMENT OF ENERGY SOLAR DECATHLON

MARK	DATE	DESCRIPTION
CN	11-01-11	FOR CONSTRUCTION

LOT NUMBER:	LOT NUMBER
DRAWN BY:	Author
CHECKED BY:	Checker
COPYRIGHT:	

SHEET TITLE

REMOVABLE CEILING PANELS - KITCHEN

I-474

8/13/2011 8:36:42 AM

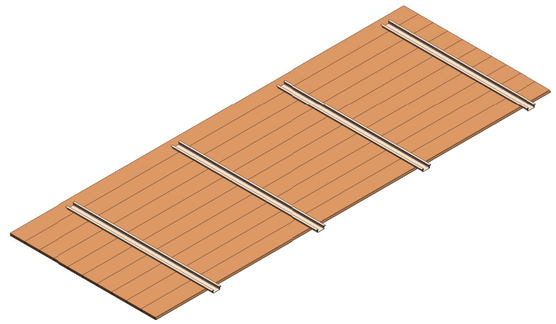

D3 CEILING PANEL B2 ISOMETRIC

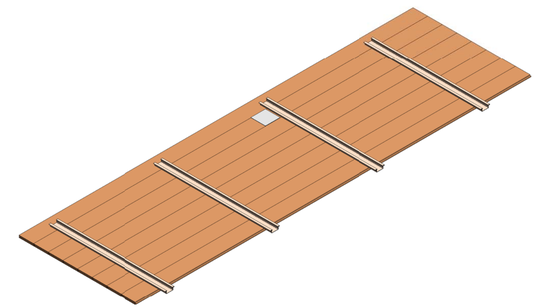

D5 CEILING PANEL B1 ISOMETRIC

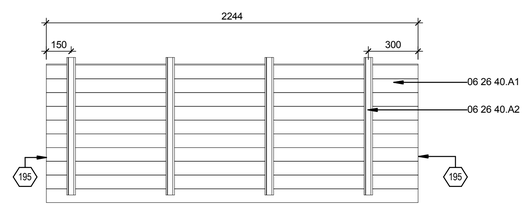

C3 CEILING PANEL B2 - PLAN
1 : 18

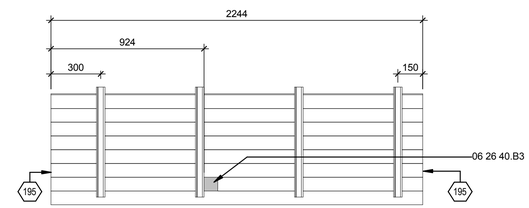

C5 CEILING PANEL B1 - PLAN
1 : 18

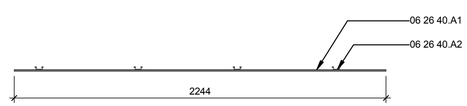

B3 CEILING PANEL B2 - SIDE ELEVATION
1 : 18

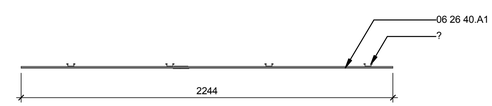

B5 CEILING PANEL B1 - SIDE ELEVATION
1 : 18

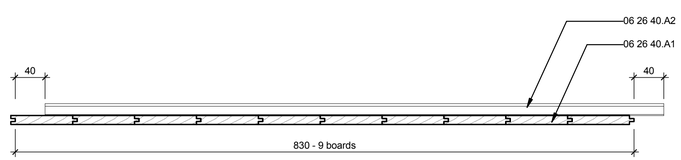

A2 CEILING PANEL B2 - SECTION
1 : 4

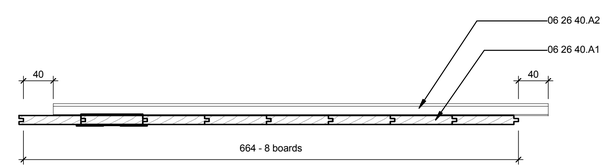

A5 CEILING PANEL B1 - SECTION
1 : 4

REFERENCE KEYNOTES

06 26 40.A1	83X12MM TOUNGE AND GROOVE RIMU BOARDS NAIL FIXED THROUGH TOUNGE TO METAL BATTEN
06 26 40.A2	PROPRIETARY METAL CEILING BATTENS AT 800MM CENTRES MAX
06 26 40.B3	83X83MM CUTOUT IN RIMU T&G BOARD AND NEIGHBOURING TOUNGE FOR 12W LED LIGHT FITTING

SHEET KEYNOTES

195	EDGES OF REMOVABLE CEILING TO OVERLAP INSIDE FACE OF INTERIOR LINING BY 6MM EACH SIDE.

FIRST LIGHT NZ

TEAM NAME:	FIRST LIGHT
ADDRESS:	139 VIVIAN STREET TE ARO, WELLINGTON NEWZEALAND
CONTACT:	ELINUTTALL@GMAIL.COM WWW.FIRSTLIGHTHOUSE.AC.NZ

CONSULTANTS

TENNENT + BROWN ARCHITECTS
DUNNING THORNTON CONSULTANTS LTD
LEAP AUSTRALASIA LTD
SOUTHERN PERSPECTIVES / SOLAR CITY

CLIENT

U.S. DEPARTMENT OF ENERGY
SOLAR DECATHLON 2011
WWW.SOLARDECATHLON.GOV

U.S. DEPARTMENT OF ENERGY SOLAR DECATHLON

MARK	DATE	DESCRIPTION
CN	11-01-11	FOR CONSTRUCTION

LOT NUMBER:	LOT NUMBER
DRAWN BY:	Author
CHECKED BY:	Checker
COPYRIGHT:	

SHEET TITLE

REMOVABLE CEILING PANELS - BATHROOM

I-475

8/13/2011 8:36:53 AM

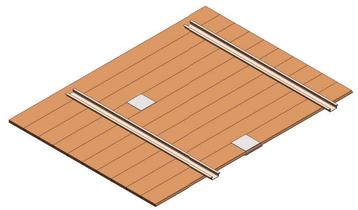

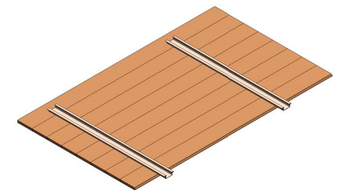

D3 CEILING PANEL LA2 ISOMETRIC

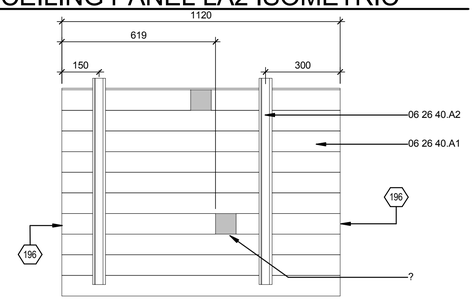

C3 CEILING PANEL LA2 - PLAN

1 : 12

D5 CEILING PANEL LA1 ISOMETRIC

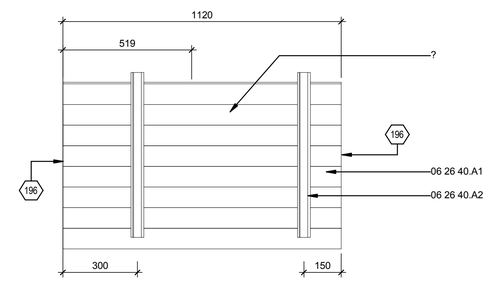

C5 CEILING PANEL LA1 - PLAN

1 : 12

C1

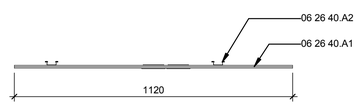

B3 CEILING PANEL LA2 - SIDE ELEVATION

1 : 12

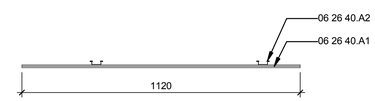

B5 CEILING PANEL LA1 - SIDE ELEVATION

1 : 12

B1

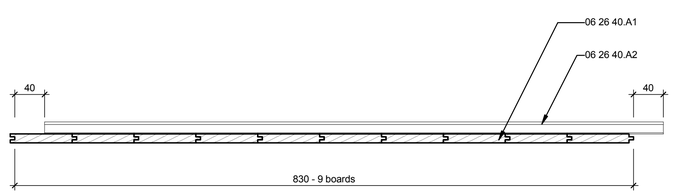

A2 CEILING PANEL LA2 - SECTION

1 : 4

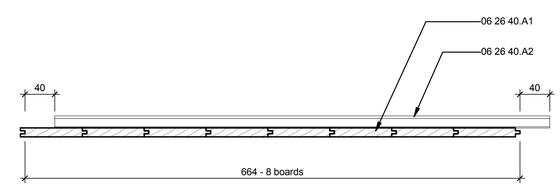

A5 CEILING PANEL LA1 - SECTION

1 : 4

REFERENCE KEYNOTES

06 26 40.A1	83X12MM TOUNGE AND GROOVE RIMU BOARDS NAIL FIXED THROUGH TOUNGE TO METAL BATTEN
06 26 40.A2	PROPRIETARY METAL CEILING BATTENS AT 800MM CENTRES MAX
06 26 40.B3	83X83MM CUTOUT IN RIMU T&G BOARD AND NEIGHBOURING TOUNGE FOR 12W LED LIGHT FITTING
06 26 40.B4	83X83MM CUTOUT IN RIMU T&G BOARD AND NEIGHBOURING TOUNGE FOR SPRINKLER HEAD

SHEET KEYNOTES

196	EDGES OF REMOVABLE CEILING TO OVERLAP INSIDE FACE OF PERMANENTLY INSTALLED CABINETRY BY 6MM

FIRST LIGHT NZ

TEAM NAME:	FIRST LIGHT
ADDRESS:	139 VIVIAN STREET TE ARO, WELLINGTON NEWZEALAND
CONTACT:	ELINUTTALL@GMAIL.COM WWW.FIRSTLIGHTHOUSE.AC.NZ

CONSULTANTS

TENNENT + BROWN ARCHITECTS
DUNNING THORNTON CONSULTANTS LTD
LEAP AUSTRALASIA LTD
SOUTHERN PERSPECTIVES / SOLAR CITY

CLIENT

U.S. DEPARTMENT OF ENERGY
SOLAR DECATHLON 2011
WWW.SOLARDECATHLON.GOV

U.S. DEPARTMENT OF ENERGY SOLAR DECATHLON

MARK	DATE	DESCRIPTION
CN	11-01-11	FOR CONSTRUCTION

LOT NUMBER:	LOT NUMBER
DRAWN BY:	Author
CHECKED BY:	Checker
COPYRIGHT:	

SHEET TITLE

REMOVABLE CEILING PANELS - LAUNDRY

I-476

8/13/2011 8:37:04 AM

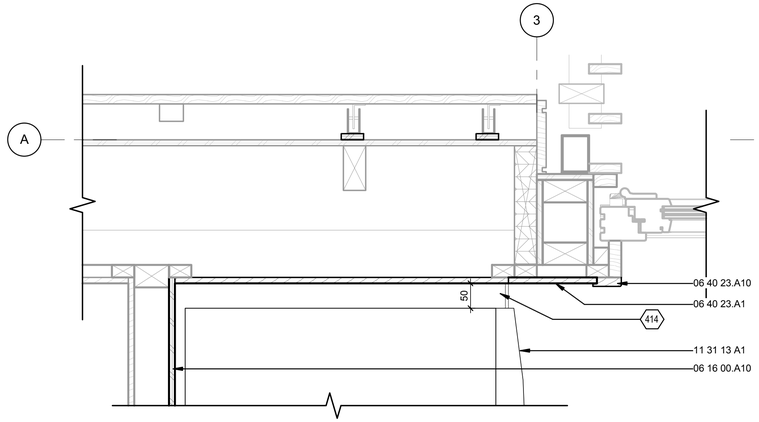

D1 KITCHEN PANTRY / FRIDGE TO EXTERNAL WALL - LOWER
1 : 6

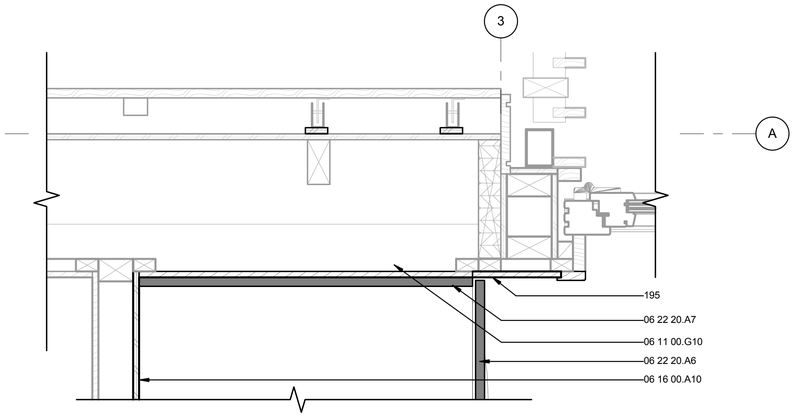

D4 KITCHEN PANTRY / FRIDGE TO EXTERNAL WALL - UPPER
1 : 6

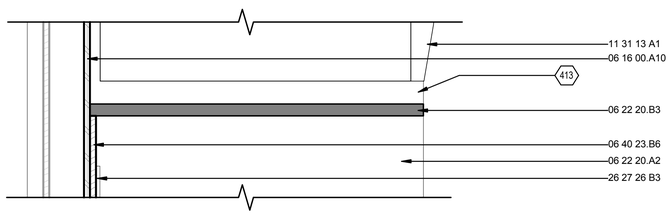

C1 KITCHEN PANTRY / FRIDGE PARTITION - LOWER
1 : 6

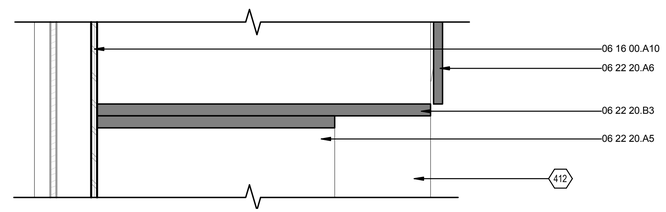

C4 KITCHEN PANTRY / FRIDGE PARTITION - UPPER
1 : 6

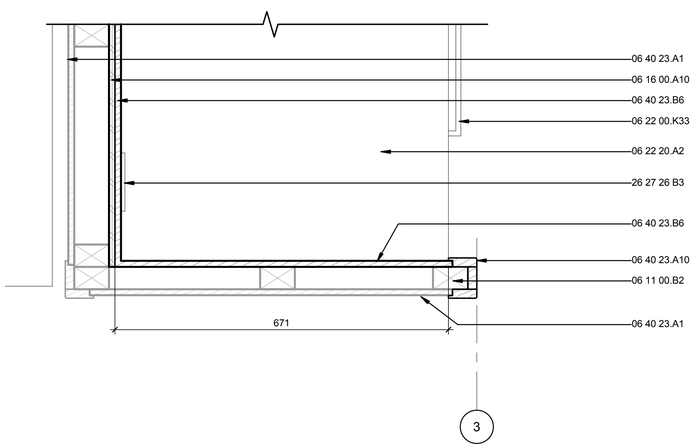

A1 KITCHEN PANTRY / FRIDGE TO SOUTH WALL - LOWER
1 : 6

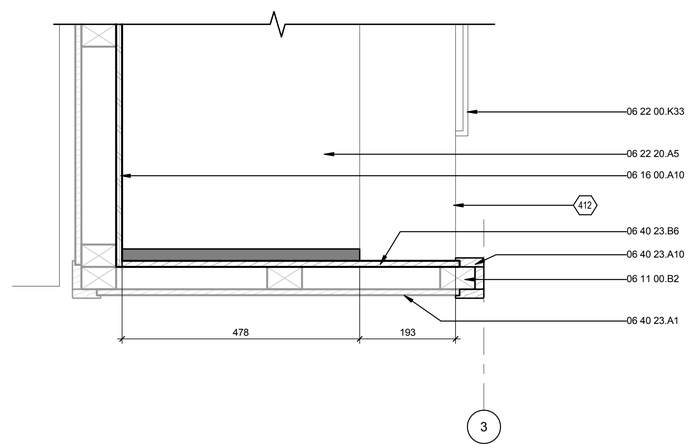

A4 KITCHEN PANTRY / FRIDGE TO SOUTH WALL - UPPER
1 : 6

GENERAL SHEET NOTES

REFERENCE KEYNOTES

06 11 00.B2	70X45MM TIMBER STUD
06 11 00.G10	45X25MM HORIZONTAL TIMBER CAVITY BATTENS FIXED TO WALL FRAMING
06 16 00.A10	12MM ECOPLY LINING NAIL FIXED AT 75MM CENTRES
06 22 00.K33	320MM BRUSHED STAINLESS STEEL HANDLE TO KITCHEN CABINETRY
06 22 20.A2	STAINLESS STEEL LAMINATED TO 36MM PLY BENCHTOP , STAINLESS RETURN 50MM AT BACK EDGE
06 22 20.A5	24MM MDF OPEN SHELVING, RIMU VENEERED ON BOTH FACES WITH RIMU EDGE TAPE APPLIED TO FRONT EDGE
06 22 20.A6	TOP HUNG 18MM 'RIMU HEART' LAMINATED MDF DOORS TO CABINETRY - HETTICH FLAP FITTING LIFE ADVANCED HK HARDWARE
06 22 20.A7	18MM MDF CABINETRY. RIMU VENEERED ON BOTH SIDES WITH RIMU EDGE TAPE APPLIED TO EXPOSED EDGES.
06 22 20.B3	24MM FULL HEIGHT MDF PANEL WITH RIMU VENEER TO BOTH SIDES AND RIMU EDGE TAPE
06 40 23.A1	83X12MM HORIZONTAL TONGUE & GROOVE RIMU TIMBER BOARD INTERIOR LINNING.
06 40 23.A10	EX 57X18MM INTERIOR TIMBER TRIM TO OPENINGS
06 40 23.B6	83X12MM HORIZONTAL TONGUE & GROOVE TIMBER BOARD INTERIOR LINNING PAINTED RESENE 'PEPPERMINT'
11 31 13 A1	FISHER & PAYKEL FRIDGE FREEZER MODEL E331T
26 27 26 B3	PDL 600 SLIMLINE SERIES DOUBLE HORIZONTAL POWER SOCKETS POSITIONED AS SHOWN

SHEET KEYNOTES

195	EDGES OF REMOVABLE CEILING TO OVERLAP INSIDE FACE OF INTERIOR LINING BY 6MM EACH SIDE.
412	STAINLESS STEEL BENCHTOP BELOW
413	AIR CLEARANCE FOR FRIDGE
414	50MM CLEARANCE FOR FRIDGE ON HINGE SIDE

FIRST LIGHT NZ

TEAM NAME:	FIRST LIGHT
ADDRESS:	139 VIVIAN STREET TE ARO, WELLINGTON NEWZEALAND
CONTACT:	ELINUTTALL@GMAIL.COM WWW.FIRSTLIGHTHOUSE.AC.NZ

CONSULTANTS

TENNENT + BROWN ARCHITECTS
DUNNING THORNTON CONSULTANTS LTD
LEAP AUSTRALASIA LTD
SOUTHERN PERSPECTIVES / SOLAR CITY

CLIENT

U.S. DEPARTMENT OF ENERGY
SOLAR DECATHLON 2011
WWW.SOLARDECATHLON.GOV

U.S. DEPARTMENT OF ENERGY SOLAR DECATHLON

MARK	DATE	DESCRIPTION
CN	11-01-11	FOR CONSTRUCTION

LOT NUMBER:	LOT NUMBER
DRAWN BY:	Author
CHECKED BY:	Checker
COPYRIGHT:	

SHEET TITLE

KITCHEN PLAN DETAILS WEST

I-501

8/13/2011 8:37:10 AM

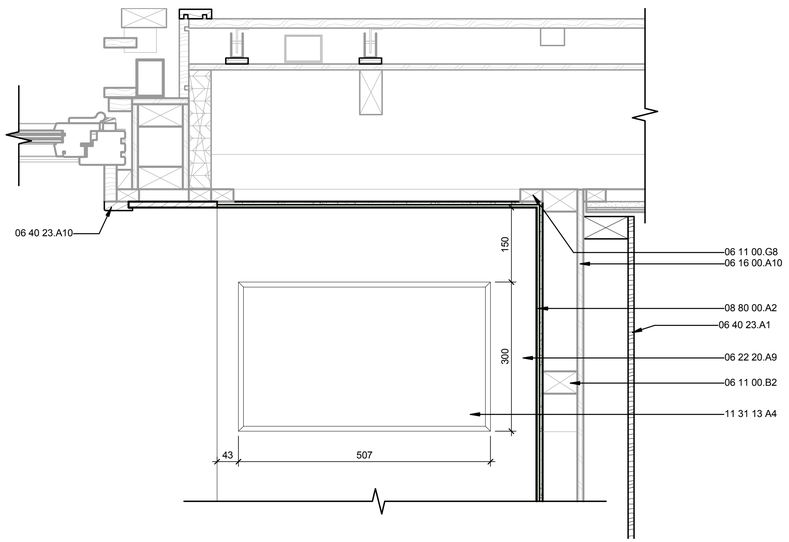

C1 KITCHEN WORKBENCH TO EXTERNAL WALL - LOWER
1 : 6

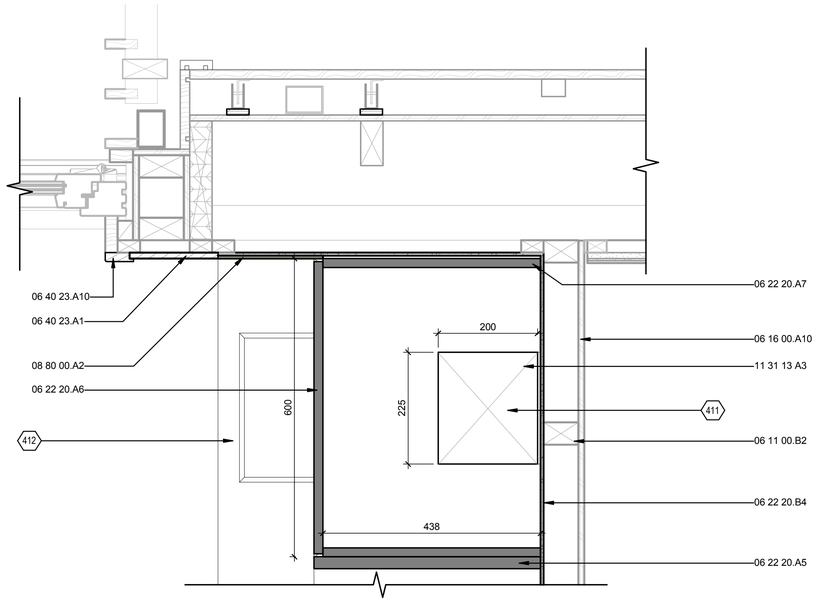

C4 KITCHEN WORKBENCH TO EXTERNAL WALL - UPPER
1 : 6

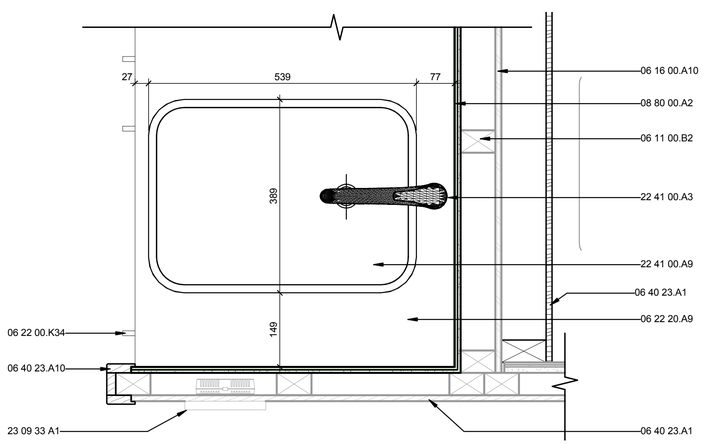

A1 KITCHEN WORKBENCH TO SOUTHERN WALL - LOWER
1 : 6

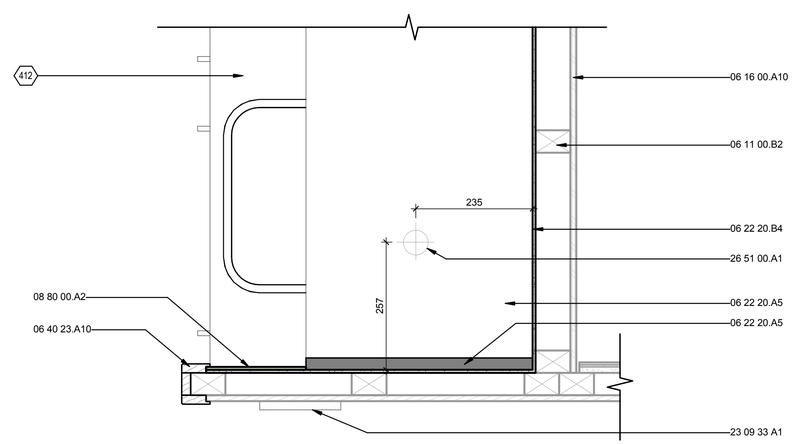

A4 KITCHEN WORKBENCH TO SOUTHERN WALL - UPPER
1 : 6

GENERAL SHEET NOTES

REFERENCE KEYNOTES

06 11 00.B2	70X45MM TIMBER STUD
06 11 00.G8	45X25MM INTERNAL TIMBER CAVITY BATTENS
06 16 00.A10	12MM ECOPLY LINING NAIL FIXED AT 75MM CENTRES
06 22 00.K34	160MM STAINLESS STEEL HANDLE TO KITCHEN CABINETRY
06 22 20.A5	24MM MDF OPEN SHELVING, RIMU VENEERED ON BOTH FACES WITH RIMU EDGE TAPE APPLIED TO FRONT EDGE
06 22 20.A6	TOP HUNG 18MM 'RIMU HEART' LAMINATED MDF DOORS TO CABINETRY - HETTICH FLAP FITTING LIFE ADVANCED HK HARDWARE
06 22 20.A7	18MM MDF CABINETRY. RIMU VENEERED ON BOTH SIDES WITH RIMU EDGE TAPE APPLIED TO EXPOSED EDGES.
06 22 20.A9	STAINLESS STEEL LAMINATED TO 36MM PLY BENCHTOP WITH 'WET EDGE' DETAILED FRONT EDGE - STAINLESS STEEL TO RETURN 50MM AT BACK EDGE
06 22 20.B4	6MM COMPRESSED FIBRE CEMENT SHEET WALL LINNING
06 40 23.A1	83X12MM HORIZONTAL TONGUE & GROOVE RIMU TIMBER BOARD INTERIOR LINNING.
06 40 23.A10	EX 57X18MM INTERIOR TIMBER TRIM TO OPENINGS
08 80 00.A2	6MM TOUGHENED GLASS SPLASHBACK FROSTED AND BACK PAINTED ON 6MM COMPRESSED FIBRE CEMENT SHEET. LAP OVER STAINLESS UPTURN.
11 31 13 A3	FISHER & PAYKEL RANGEHOOD MODEL HC60PCHTX1
11 31 13 A4	FISHER & PAYKEL SLIMLINE INDUCTION HOB
22 41 00.A3	BENCHTOP MOUNTED METHVEN FUTURA KITCHEN MIXER TAP CENTRED ON SINK
22 41 00.A9	MECER 'RIVA' S/S SINK INVISIBLE WELD TO STAINLESS BENCHTOP
23 09 33 A1	SCHNEIDER ELECTRIC MAGELIS HMI CONTROLLER
26 51 00.A1	6W RECESSED LED DOWNLIGHT

SHEET KEYNOTES

411	CUT AWAY IN CABINETRY SHELVING TO ALLOW FOR RANGEHOOD EXTRACT DUCT
412	STAINLESS STEEL BENCHTOP BELOW

FIRST LIGHT NZ

TEAM NAME:	FIRST LIGHT
ADDRESS:	139 VIVIAN STREET TE ARO, WELLINGTON NEWZEALAND
CONTACT:	ELINUTTALL@GMAIL.COM WWW.FIRSTLIGHTHOUSE.AC.NZ

CONSULTANTS

TENNENT + BROWN ARCHITECTS
DUNNING THORNTON CONSULTANTS LTD
LEAP AUSTRALASIA LTD
SOUTHERN PERSPECTIVES / SOLAR CITY

CLIENT
U.S. DEPARTMENT OF ENERGY
SOLAR DECATHLON 2011
WWW.SOLARDECATHLON.GOV

U.S. DEPARTMENT OF ENERGY SOLAR DECATHLON

MARK	DATE	DESCRIPTION
CN	11-01-11	FOR CONSTRUCTION

LOT NUMBER:	LOT NUMBER
DRAWN BY:	Author
CHECKED BY:	Checker
COPYRIGHT:	

SHEET TITLE
KITCHEN PLAN DETAILS EAST

I-502

8/13/2011 8:37:17 AM

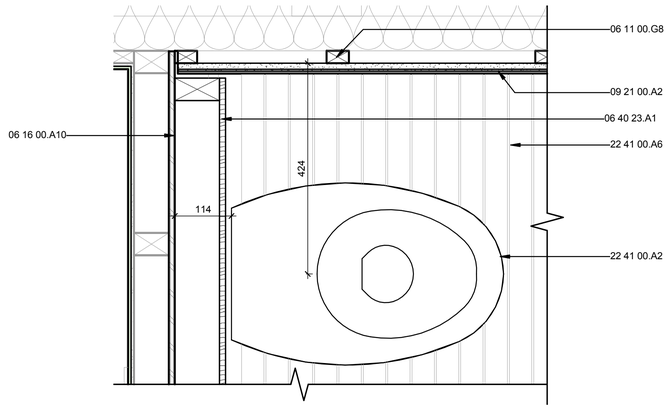

D1 BATHROOM WALL / TOILET
1 : 6

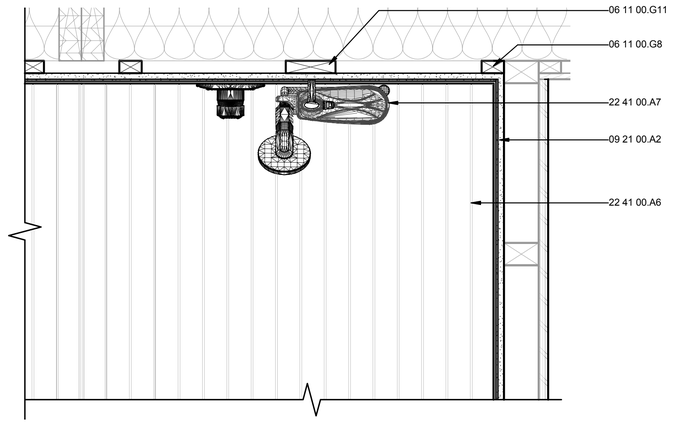

D4 BATHROOM WALL / SHOWER
1 : 6

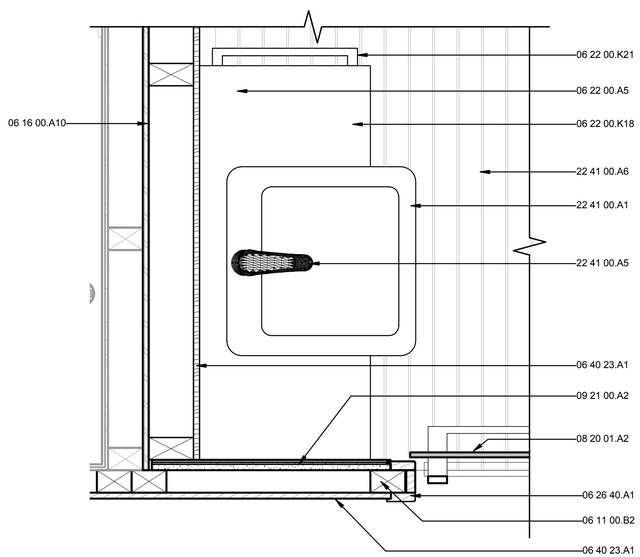

A1 BATHROOM WALL / BASIN
1 : 6

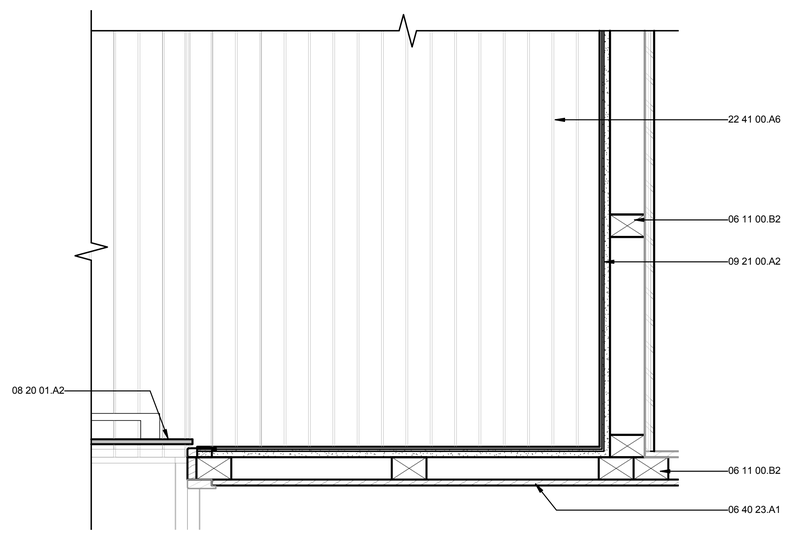

A4 BATHROOM WALL / DOOR
1 : 6

REFERENCE KEYNOTES

06 11 00.B2	70X45MM TIMBER STUD
06 11 00.G8	45X25MM INTERNAL TIMBER CAVITY BATTENS
06 11 00.G11	100 X 25MM VERTICAL BLOCKING FOR FIXING SHOWER COLUMN
06 16 00.A10	12MM ECOPLY LINING NAIL FIXED AT 75MM CENTRES
06 22 00.A5	BATHROOM CABINET WITH 1150MM LED BAR MOUNTED ABOVE AND BELOW. REFER DETAIL DRAWINGS
06 22 00.K18	50MM BENCHTOP WITH 'RIMU HEART' VENEER. BASIN INSET.
06 22 00.K21	HETTICH PRO DECOR HANDLE 045637 TOWEL RAIL TO SIDE OF VANITY UNIT
06 26 40.A1	83X12MM TOUNGE AND GROOVE RIMU BOARDS NAIL FIXED THROUGH TOUNGE TO METAL BATTEN
06 40 23.A1	83X12MM HORIZONTAL TONGUE & GROOVE RIMU TIMBER BOARD INTERIOR LINNING.
08 20 01.A2	10MM TOP HUNG FLOOR TO CEILING TOUGHENED GLASS FACE-SLIDER. ACID ETCHED ON SOUTH FACE. DORMA AGILE 150 SLIDING DOOR SYSTEM
09 21 00.A2	200 X 200MM ETCHLITE BACKPAINTED GLASS TILES OVER WPM ON 12MM COMPRESSED FIBRE CEMENT SHEET SUBSTRATE
22 41 00.A1	380 X 380 X 130MM TRENZ SEMI RECESSED BASIN. MODEL 4148-C
22 41 00.A2	IMEX CB-1088 ARCO BACK-TO-WALL TOILET PAN WITH FULLY FRAMED 'WATERMARK' DUAL FLUSH IN-WALL CISTERN. REFER MANUFACTURERS SPECIFICATIONS FOR INSTALLATION DETAILS
22 41 00.A5	METHVEN FUTURA BASIN MIXER
22 41 00.A6	THREE PART MERCER STAINLESS STEEL SHOWER TRAY UNDER DUCKBOARD SYSTEM. SHOWER TRAY CROSSES AND WATERPROOFS MODULE JOIN. REMOVEABLE HARDWOOD TIMBER DUCKBOARDS SIT OVER TRAY
22 41 00.A7	METHVEN KIRI SATINJET SHOWER SYSTEM WITH OVERHEAD RAINSHOWER COLUMN

SHEET KEYNOTES

FIRST LIGHT NZ

TEAM NAME:	FIRST LIGHT
ADDRESS:	139 VIVIAN STREET TE ARO, WELLINGTON NEWZEALAND
CONTACT:	ELINUTTALL@GMAIL.COM WWW.FIRSTLIGHTHOUSE.AC.NZ

CONSULTANTS

TENNENT + BROWN ARCHITECTS
DUNNING THORNTON CONSULTANTS LTD
LEAP AUSTRALASIA LTD
SOUTHERN PERSPECTIVES / SOLAR CITY

CLIENT

U.S. DEPARTMENT OF ENERGY
SOLAR DECATHLON 2011
WWW.SOLARDECATHLON.GOV

U.S. DEPARTMENT OF ENERGY SOLAR DECATHLON

MARK	DATE	DESCRIPTION
CN	11-01-11	FOR CONSTRUCTION

LOT NUMBER:	LOT NUMBER
DRAWN BY:	Author
CHECKED BY:	Checker
COPYRIGHT:	

SHEET TITLE

BATHROOM PLAN DETAILS

I-511

8/13/2011 8:37:24 AM

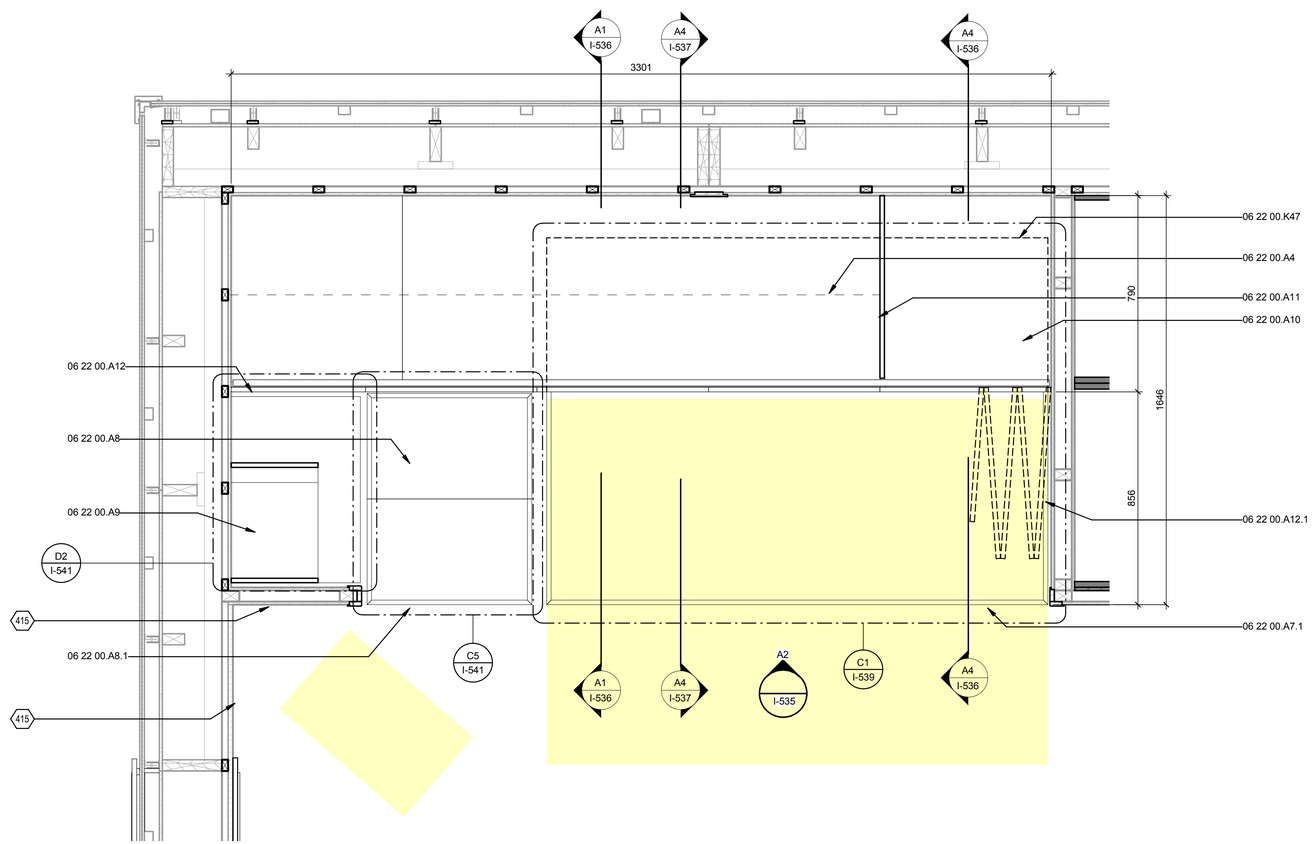

A2 LOUNGE JOINERY UNITS - PLAN

1 : 12

0 1/2' 1' 2'

8/13/2011 8:37:28 AM

GENERAL SHEET NOTES

REFERENCE KEYNOTES

06 22 00.A4	LINE OF STORAGE UNIT ABOVE - REFER ELEVATIONS FOR DETAILS
06 22 00.A7.1	SHADED REGION SHOWS SOFA BED IN 'OPEN' POSITION
06 22 00.A8	LIVING ROOM JOINERY - OTTOMAN
06 22 00.A8.1	SHADED REGION SHOWS OTTOMAN IN 'OPEN' POSITION
06 22 00.A9	LIVING ROOM JOINERY - BEDSIDE SHELVING/STORAGE UNIT. FIXED TO WALL AND CEILING STRUCTURE
06 22 00.A10	LIVING ROOM JOINERY - BUNK BED. PLATFORM ALSO ACTS AS KIDS' TV VIEWING PLATFORM WHEN BIFOLD DOORS ARE OPEN
06 22 00.A11	LIVING ROOM JOINERY - ABOVE BUNK SHELVING UNIT. PRE-ASSEMBLED AND TOP HUNG FROM CEILING STRUCTURE
06 22 00.A12	LIVING ROOM JOINERY - BIFOLD DOORS. TRACK GEAR FIXED ON-SITE. BOTTOM TRACK FIXED TO BUNK SHELVING UNIT, TOP TRACK TO CEILING.
06 22 00.A12.1	BIFOLD DOORS SHOWN IN 'OPEN' POSITION
06 22 00.K47	DASHED LINE INDICATES EXTENT OF SOFA BED BELOW BUNK SHELVING UNIT
06 40 23.B10	REMOVABLE TIMBER FACING CUT TO FALL OF SKYLIGHT

SHEET KEYNOTES

415	BIFOLD DOORS OVER BUNK BED STRUCTURE NOT SHOWN IN THIS VIEW

FIRST LIGHT NZ

TEAM NAME: FIRST LIGHT

ADDRESS: 139 VIVIAN STREET
TE ARO, WELLINGTON
NEWZEALAND

CONTACT: ELINUTTALL@GMAIL.COM
WWW.FIRSTLIGHTHOUSE.AC.NZ

CONSULTANTS

TENNENT + BROWN ARCHITECTS

DUNNING THORNTON CONSULTANTS LTD

LEAP AUSTRALASIA LTD

SOUTHERN PERSPECTIVES / SOLAR CITY

CLIENT

U.S. DEPARTMENT OF ENERGY

SOLAR DECATHLON 2011

WWW.SOLARDECATHLON.GOV

U.S. DEPARTMENT OF ENERGY SOLAR DECATHLON

MARK	DATE	DESCRIPTION
CN	11-01-11	FOR CONSTRUCTION

LOT NUMBER: LOT NUMBER

DRAWN BY: Author

CHECKED BY: Checker

COPYRIGHT:

SHEET TITLE

LOUNGE JOINERY UNITS - PLAN

I-531

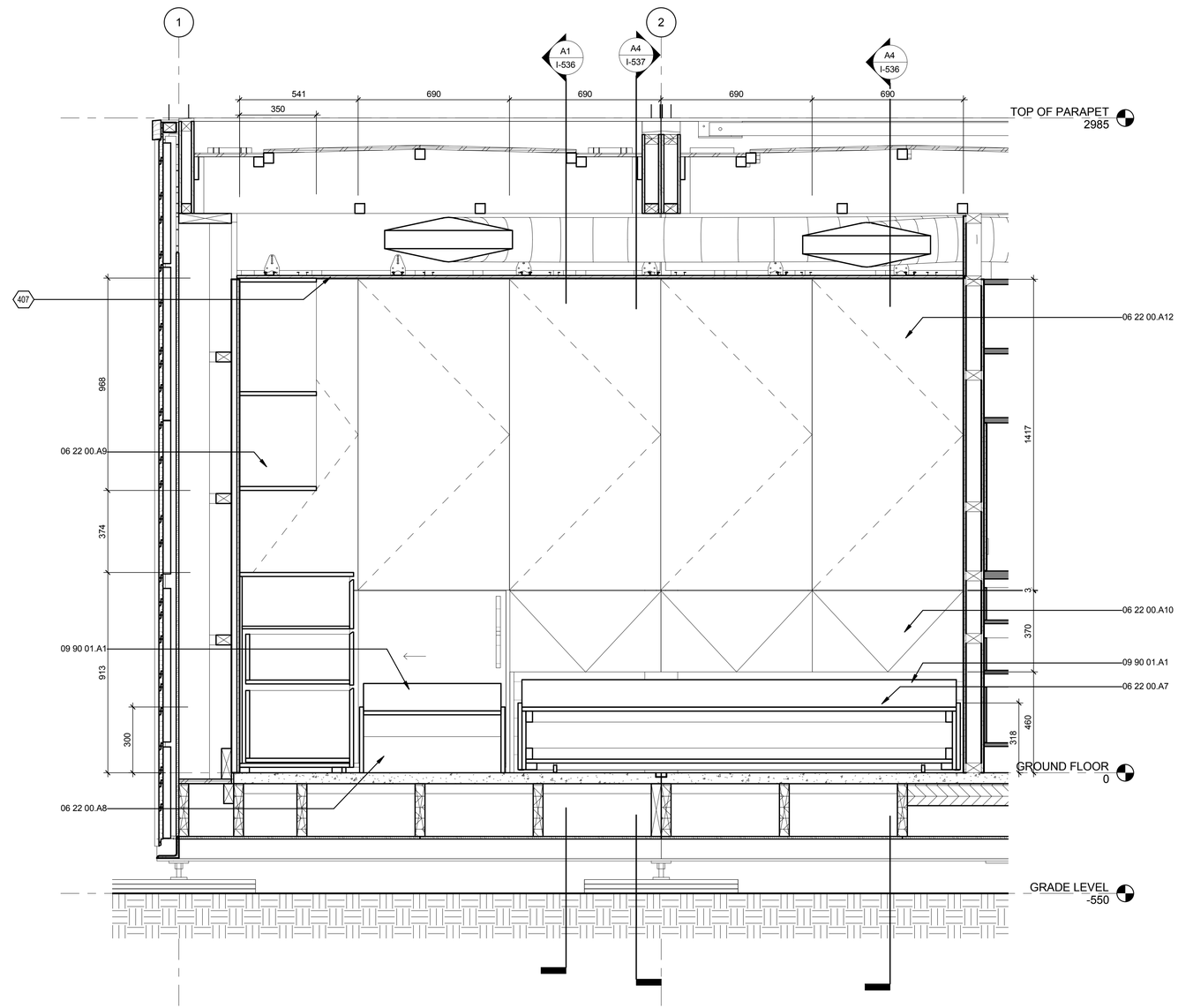

A2 LOUNGE JOINERY UNITS - SECTION (CLOSED)
1 : 12

GENERAL SHEET NOTES

REFERENCE KEYNOTES

06 22 00.A7	LIVING ROOM JOINERY - DOUBLE SOFA BED
06 22 00.A8	LIVING ROOM JOINERY - OTTOMAN
06 22 00.A9	LIVING ROOM JOINERY - BEDSIDE SHELVING/STORAGE UNIT. FIXED TO WALL AND CEILING STRUCTURE
06 22 00.A10	LIVING ROOM JOINERY - BUNK BED. PLATFORM ALSO ACTS AS KIDS' TV VIEWING PLATFORM WHEN BIFOLD DOORS ARE OPEN
06 22 00.A12	LIVING ROOM JOINERY - BIFOLD DOORS. TRACK GEAR FIXED ON-SITE. BOTTOM TRACK FIXED TO BUNK SHELVING UNIT, TOP TRACK TO CEILING.
09 90 01.A1	UPHOLSTERED FOAM SQUABS - FABRIC TO BE BLAZER PRESTWICK FELT

SHEET KEYNOTES

407	REMOVEABLE RIMU T&G CEILING PANELS TO ALL CEILINGS THROUGH BUILDING CORE - REFER INTERIOR DRAWING SET FOR DETAILS AND SETOUT

FIRST LIGHT NZ

TEAM NAME:	FIRST LIGHT
ADDRESS:	139 VIVIAN STREET TE ARO, WELLINGTON NEWZEALAND
CONTACT:	ELINUTTALL@GMAIL.COM WWW.FIRSTLIGHTHOUSE.AC.NZ

CONSULTANTS

TENNENT + BROWN ARCHITECTS

DUNNING THORNTON CONSULTANTS LTD

LEAP AUSTRALASIA LTD

SOUTHERN PERSPECTIVES / SOLAR CITY

CLIENT

U.S. DEPARTMENT OF ENERGY

SOLAR DECATHLON 2011

WWW.SOLARDECATHLON.GOV

U.S. DEPARTMENT OF ENERGY SOLAR DECATHLON

MARK	DATE	DESCRIPTION
CN	11-01-11	FOR CONSTRUCTION

LOT NUMBER:	LOT NUMBER
DRAWN BY:	Author
CHECKED BY:	Checker
COPYRIGHT:	

SHEET TITLE

LOUNGE JOINERY UNITS - SECTION (CLOSED)

I-534

8/13/2011 8:37:33 AM

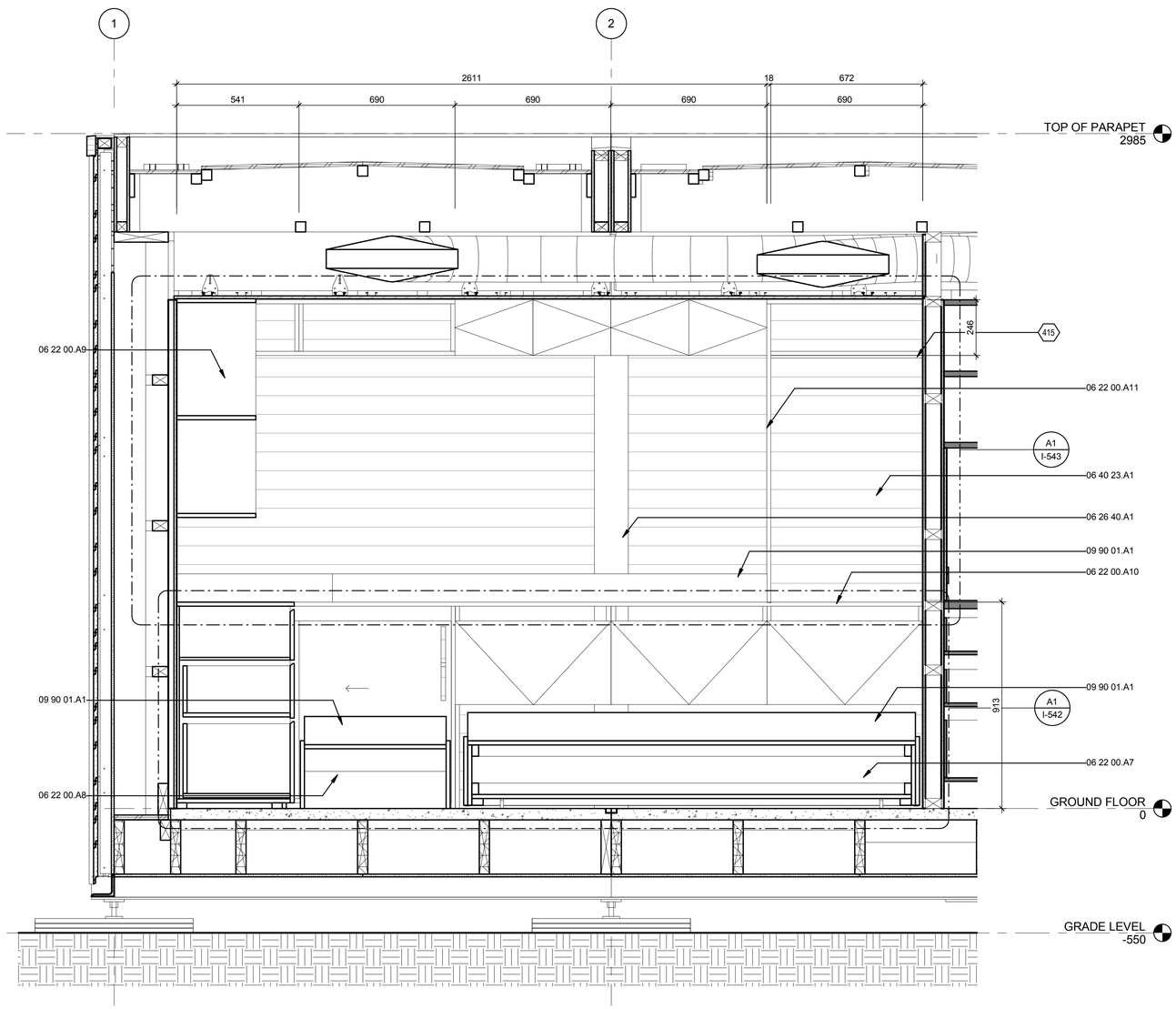

A2 LOUNGE JOINERY UNITS - SECTION (OPEN)
1 : 12

GENERAL SHEET NOTES

REFERENCE KEYNOTES

06 22 00.A7	LIVING ROOM JOINERY - DOUBLE SOFA BED
06 22 00.A8	LIVING ROOM JOINERY - OTTOMAN
06 22 00.A9	LIVING ROOM JOINERY - BEDSIDE SHELVING/STORAGE UNIT. FIXED TO WALL AND CEILING STRUCTURE
06 22 00.A10	LIVING ROOM JOINERY - BUNK BED. PLATFORM ALSO ACTS AS KIDS' TV VIEWING PLATFORM WHEN BIFOLD DOORS ARE OPEN
06 22 00.A11	LIVING ROOM JOINERY - ABOVE BUNK SHELVING UNIT. PRE-ASSEMBLED AND TOP HUNG FROM CEILING STRUCTURE
06 26 40.A1	83X12MM TOUNGE AND GROOVE RIMU BOARDS NAIL FIXED THROUGH TOUNGE TO METAL BATTEN
06 40 23.A1	83X12MM HORIZONTAL TONGUE & GROOVE RIMU TIMBER BOARD INTERIOR LINNING.
09 90 01.A1	UPHOLSTERED FOAM SQUABS - FABRIC TO BE BLAZER PRESTWICK FELT

SHEET KEYNOTES

415	BIFOLD DOORS OVER BUNK BED STRUCTURE NOT SHOWN IN THIS VIEW

FIRST LIGHT NZ

TEAM NAME:	FIRST LIGHT
ADDRESS:	139 VIVIAN STREET TE ARO, WELLINGTON NEWZEALAND
CONTACT:	ELINUTTALL@GMAIL.COM WWW.FIRSTLIGHTHOUSE.AC.NZ

CONSULTANTS

TENNENT + BROWN ARCHITECTS

DUNNING THORNTON CONSULTANTS LTD

LEAP AUSTRALASIA LTD

SOUTHERN PERSPECTIVES / SOLAR CITY

CLIENT

U.S. DEPARTMENT OF ENERGY

SOLAR DECATHLON 2011

WWW.SOLARDECATHLON.GOV

U.S. DEPARTMENT OF ENERGY SOLAR DECATHLON

MARK	DATE	DESCRIPTION
CN	11-01-11	FOR CONSTRUCTION

LOT NUMBER:	LOT NUMBER
DRAWN BY:	Author
CHECKED BY:	Checker
COPYRIGHT:	

SHEET TITLE

LOUNGE JOINERY UNITS - SECTION (OPEN)

I-535

8/13/2011 8:37:37 AM

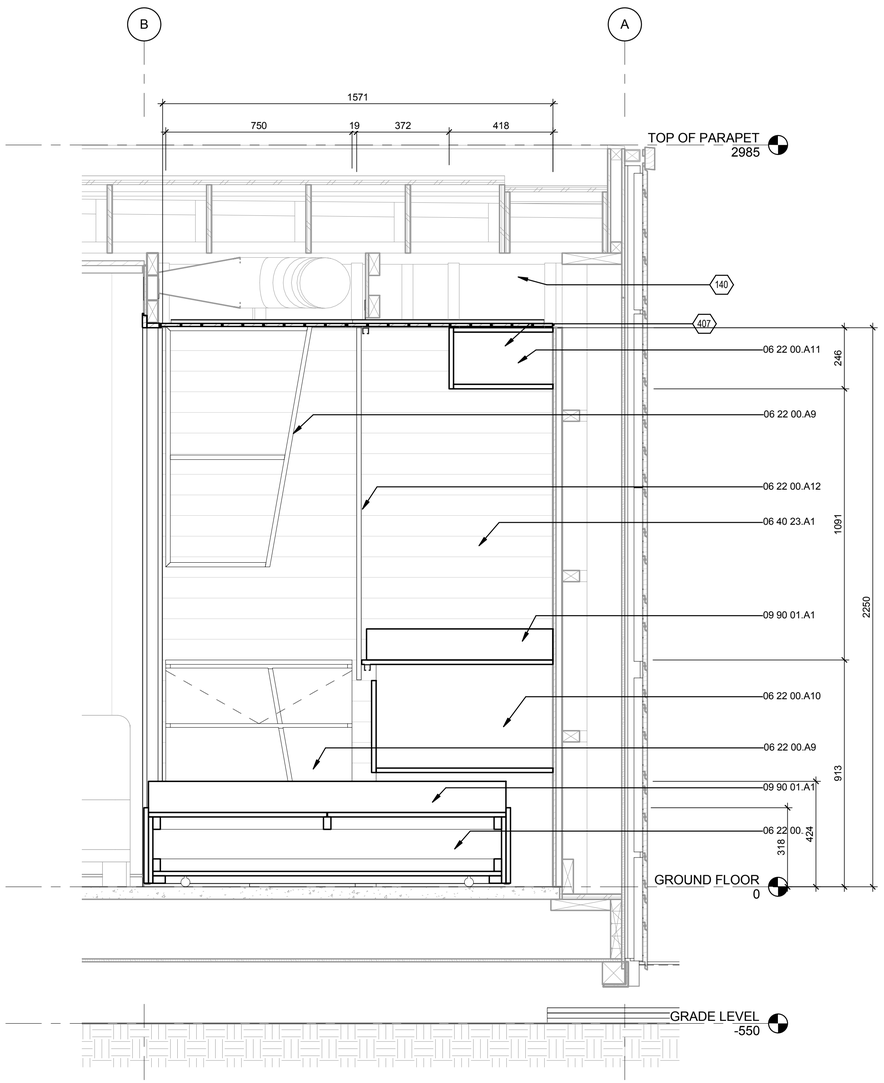

A1 LOUNGE JOINERY UNITS - SECTION 1
1 : 24

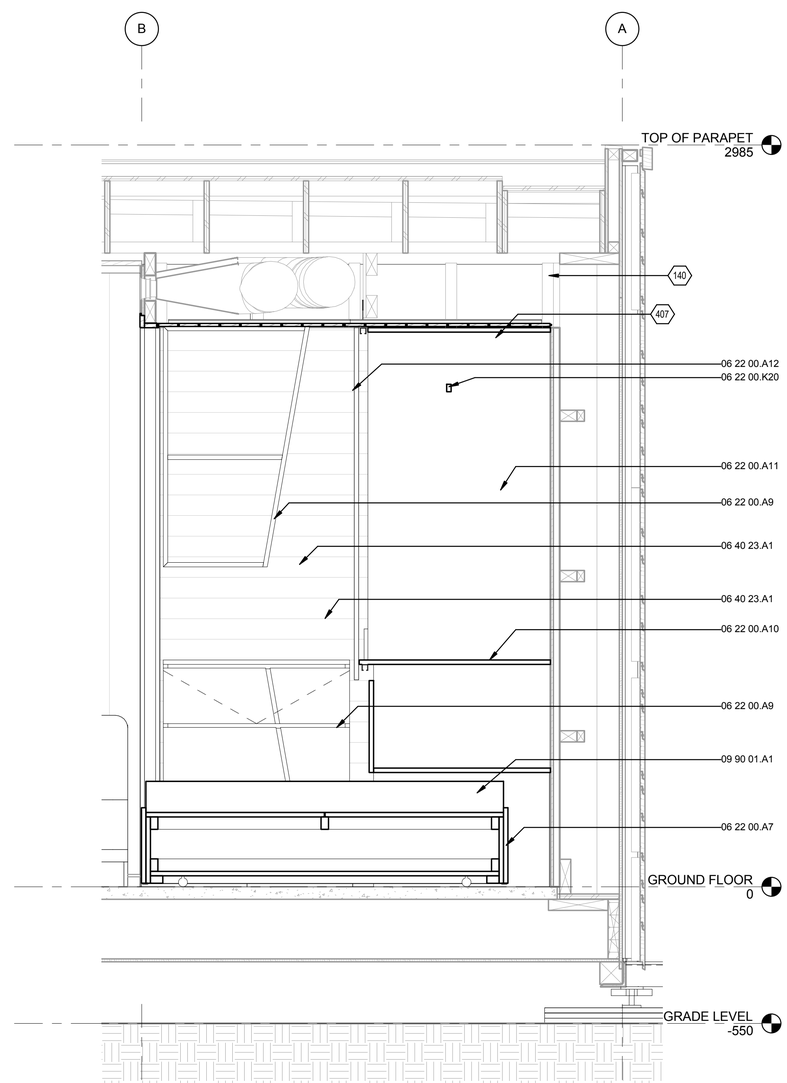

A4 LOUNGE JOINERY UNITS - SECTION 2
1 : 24

GENERAL SHEET NOTES

REFERENCE KEYNOTES

06 22 00.A7	LIVING ROOM JOINERY - DOUBLE SOFA BED
06 22 00.A9	LIVING ROOM JOINERY - BEDSIDE SHELVING/STORAGE UNIT. FIXED TO WALL AND CEILING STRUCTURE
06 22 00.A10	LIVING ROOM JOINERY - BUNK BED. PLATFORM ALSO ACTS AS KIDS' TV VIEWING PLATFORM WHEN BIFOLD DOORS ARE OPEN
06 22 00.A11	LIVING ROOM JOINERY - ABOVE BUNK SHELVING UNIT. PRE-ASSEMBLED AND TOP HUNG FROM CEILING STRUCTURE
06 22 00.A12	LIVING ROOM JOINERY - BIFOLD DOORS. TRACK GEAR FIXED ON-SITE. BOTTOM TRACK FIXED TO BUNK SHELVING UNIT, TOP TRACK TO CEILING.
06 22 00.K20	ALUMINIUM BAR FIXED TO JOINERY UNIT TO CREATE HANGING SPACE
06 40 23.A1	83X12MM HORIZONTAL TONGUE & GROOVE RIMU TIMBER BOARD INTERIOR LINNING.
09 90 01.A1	UPHOLSTERED FOAM SQUABS - FABRIC TO BE BLAZER PRESTWICK FELT

SHEET KEYNOTES

140	SERVICES BULKHEAD
407	REMOVEABLE RIMU T&G CEILING PANELS TO ALL CEILINGS THROUGH BUILDING CORE - REFER INTERIOR DRAWING SET FOR DETAILS AND SETOUT

FIRST LIGHT NZ

TEAM NAME:	FIRST LIGHT
ADDRESS:	139 VIVIAN STREET TE ARO, WELLINGTON NEWZEALAND
CONTACT:	ELINUTTALL@GMAIL.COM WWW.FIRSTLIGHTHOUSE.AC.NZ

CONSULTANTS

TENNENT + BROWN ARCHITECTS
DUNNING THORNTON CONSULTANTS LTD
LEAP AUSTRALASIA LTD
SOUTHERN PERSPECTIVES / SOLAR CITY

CLIENT

U.S. DEPARTMENT OF ENERGY
SOLAR DECATHLON 2011
WWW.SOLARDECATHLON.GOV

U.S. DEPARTMENT OF ENERGY SOLAR DECATHLON

MARK	DATE	DESCRIPTION
CN	11-01-11	FOR CONSTRUCTION

LOT NUMBER:	LOT NUMBER
DRAWN BY:	Author
CHECKED BY:	Checker
COPYRIGHT:	

SHEET TITLE

LOUNGE JOINERY UNIT SECTIONS

I-536

8/13/2011 8:37:43 AM

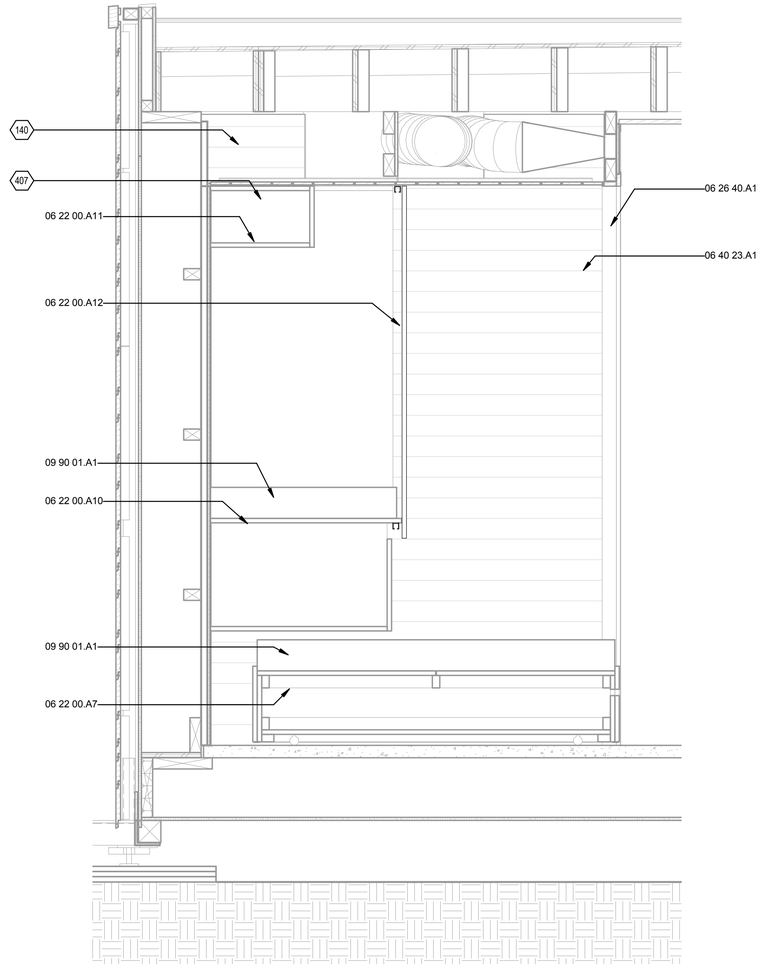

A4 SOFA BED & STORAGE UNIT SECTION 02 - OPEN
1 : 24

GENERAL SHEET NOTES

REFERENCE KEYNOTES

06 22 00.A7	LIVING ROOM JOINERY - DOUBLE SOFA BED
06 22 00.A10	LIVING ROOM JOINERY - BUNK BED. PLATFORM ALSO ACTS AS KIDS' TV VIEWING PLATFORM WHEN BIFOLD DOORS ARE OPEN
06 22 00.A11	LIVING ROOM JOINERY - ABOVE BUNK SHELVING UNIT. PRE-ASSEMBLED AND TOP HUNG FROM CEILING STRUCTURE
06 22 00.A12	LIVING ROOM JOINERY - BIFOLD DOORS. TRACK GEAR FIXED ON-SITE. BOTTOM TRACK FIXED TO BUNK SHELVING UNIT, TOP TRACK TO CEILING.
06 26 40.A1	83X12MM TOUNGE AND GROOVE RIMU BOARDS NAIL FIXED THROUGH TOUNGE TO METAL BATTEN
06 40 23.A1	83X12MM HORIZONTAL TONGUE & GROOVE RIMU TIMBER BOARD INTERIOR LINNING.
09 90 01.A1	UPHOLSTERED FOAM SQUABS - FABRIC TO BE BLAZER PRESTWICK FELT

SHEET KEYNOTES

140	SERVICES BULKHEAD
407	REMOVEABLE RIMU T&G CEILING PANELS TO ALL CEILINGS THROUGH BUILDING CORE - REFER INTERIOR DRAWING SET FOR DETAILS AND SETOUT

FIRST LIGHT NZ

TEAM NAME:	FIRST LIGHT
ADDRESS:	139 VIVIAN STREET TE ARO, WELLINGTON NEWZEALAND
CONTACT:	ELINUTTALL@GMAIL.COM WWW.FIRSTLIGHTHOUSE.AC.NZ

CONSULTANTS

TENNENT + BROWN ARCHITECTS

DUNNING THORNTON CONSULTANTS LTD

LEAP AUSTRALASIA LTD

SOUTHERN PERSPECTIVES / SOLAR CITY

CLIENT

U.S. DEPARTMENT OF ENERGY

SOLAR DECATHLON 2011

WWW.SOLARDECATHLON.GOV

U.S. DEPARTMENT OF ENERGY SOLAR DECATHLON

MARK	DATE	DESCRIPTION
CN	11-01-11	FOR CONSTRUCTION

LOT NUMBER:	LOT NUMBER
DRAWN BY:	Author
CHECKED BY:	Checker
COPYRIGHT:	

SHEET TITLE

LOUNGE JOINERY UNIT - SECTIONS

I-537

8/13/2011 8:37:47 AM

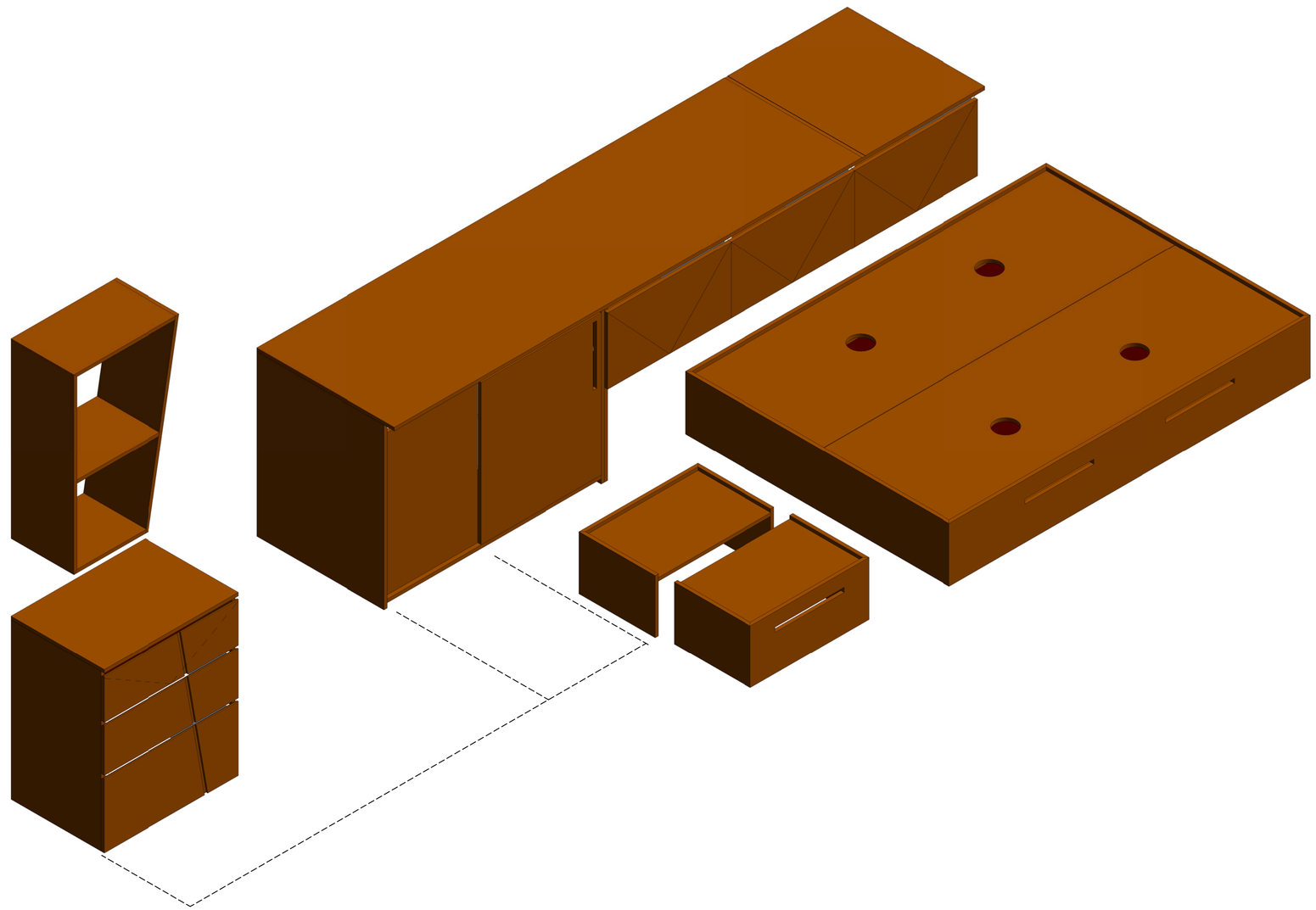

A1 LIVING ROOM JOINERY - EXPLODED ISOMETRIC

8/13/2011 8:37:58 AM

GENERAL SHEET NOTES

REFERENCE KEYNOTES

SHEET KEYNOTES

FIRST LIGHT NZ

TEAM NAME:	FIRST LIGHT
ADDRESS:	139 VIVIAN STREET TE ARO, WELLINGTON NEWZEALAND
CONTACT:	ELINUTTALL@GMAIL.COM WWW.FIRSTLIGHTHOUSE.AC.NZ

CONSULTANTS

TENNENT + BROWN ARCHITECTS
DUNNING THORNTON CONSULTANTS LTD
LEAP AUSTRALASIA LTD
SOUTHERN PERSPECTIVES / SOLAR CITY

CLIENT

U.S. DEPARTMENT OF ENERGY
SOLAR DECATHLON 2011
WWW.SOLARDECATHLON.GOV

U.S. DEPARTMENT OF ENERGY SOLAR DECATHLON

MARK	DATE	DESCRIPTION
CN	11-01-11	FOR CONSTRUCTION

LOT NUMBER:	LOT NUMBER
DRAWN BY:	Author
CHECKED BY:	Checker
COPYRIGHT:	

SHEET TITLE

LIVING ROOM JOINERY
EXPLODED ISOMETRIC

I-538

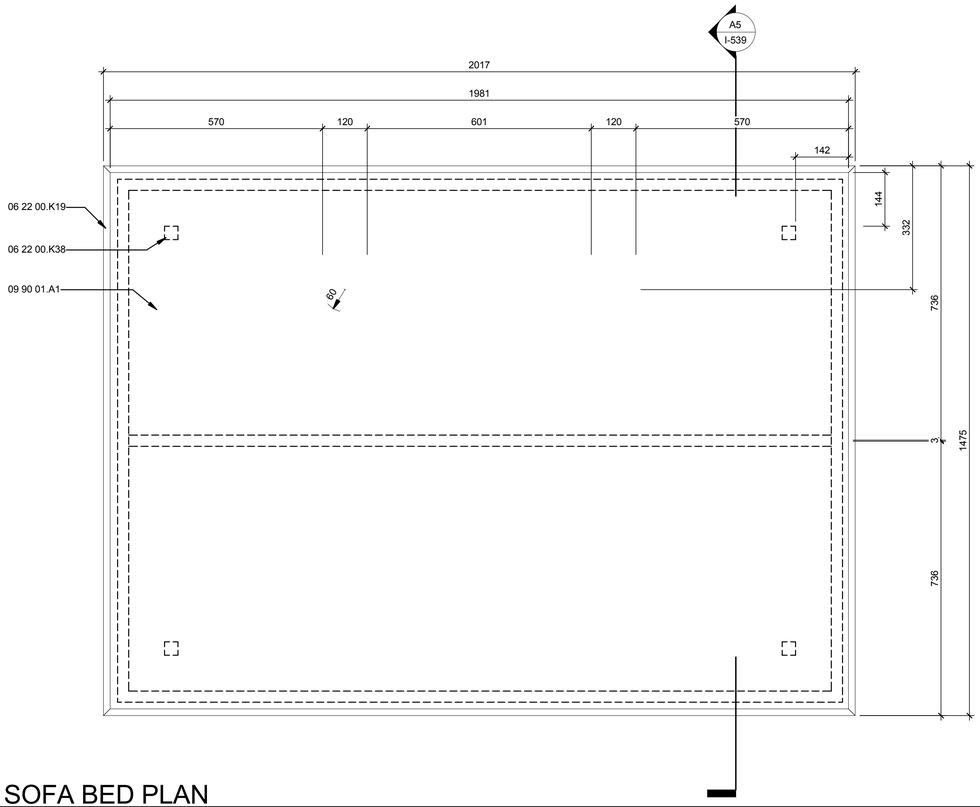

C1 SOFA BED PLAN
1 : 8

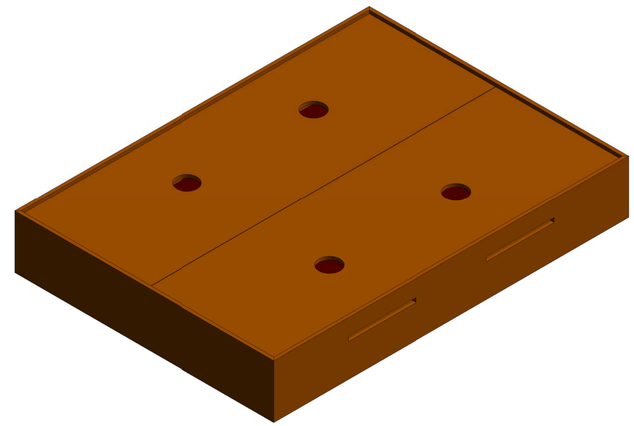

GENERAL SHEET NOTES

REFERENCE KEYNOTES

06 22 00.K19	18MM MDF WITH 'RIMU HEART' VENEER. RIMU EDGE TAPE APPLIED TO FRONT EDGE
06 22 00.K26	50 X 30MM TIMBER RUNNERS
06 22 00.K27	STOP ROLL SPRING LOADED CASTOR WHEELS WITH CENTRAL AND PRESSURE LOCKING, FIXED TO BED BASE
06 22 00.K28	18MM MDF WITH 'RIMU HEART' LAMINATE TO BOTH FACES. PANELS LIFT OFF FOR ACCESS TO BED BOX STORAGE
06 22 00.K29	18MM HARDBOARD BED BOX BASE
06 22 00.K30	2MM RUBBER STRIP TO UNDERSIDE OF BED BOX
06 22 00.K37	25MM ROUTED FINGER HANDLE
06 22 00.K38	CASTOR MOUNTING PANEL LOCATED ON UNDERSIDE OF HARDBOARD BASE
09 90 01.A1	UPHOLSTERED FOAM SQUABS - FABRIC TO BE BLAZER PRESTWICK FELT

SHEET KEYNOTES

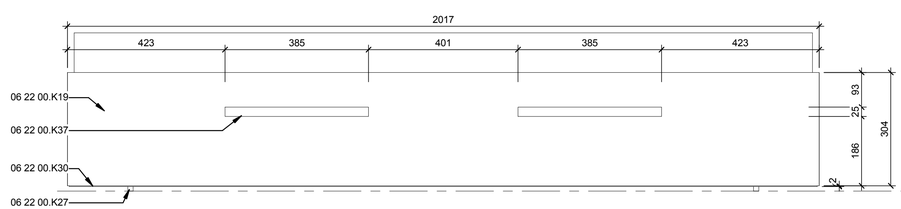

A1 SOFA BED FRONT ELEVATION
1 : 8

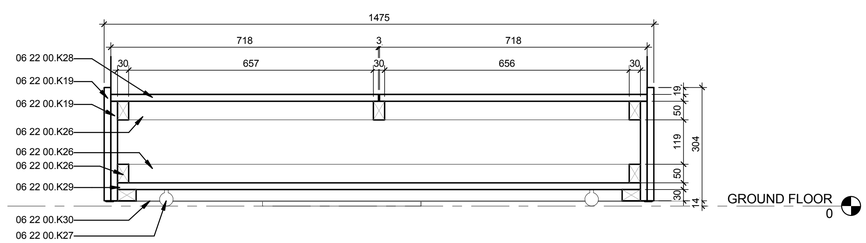

A5 SOFA BED SECTION
1 : 24

FIRST LIGHT NZ

TEAM NAME:	FIRST LIGHT
ADDRESS:	139 VIVIAN STREET TE ARO, WELLINGTON NEWZEALAND
CONTACT:	ELINUTTALL@GMAIL.COM WWW.FIRSTLIGHTHOUSE.AC.NZ

CONSULTANTS

TENNENT + BROWN ARCHITECTS
DUNNING THORNTON CONSULTANTS LTD
LEAP AUSTRALASIA LTD
SOUTHERN PERSPECTIVES / SOLAR CITY

CLIENT
U.S. DEPARTMENT OF ENERGY
SOLAR DECATHLON 2011
WWW.SOLARDECATHLON.GOV

U.S. DEPARTMENT OF ENERGY SOLAR DECATHLON

MARK	DATE	DESCRIPTION
CN	11-01-11	FOR CONSTRUCTION

LOT NUMBER:	LOT NUMBER
DRAWN BY:	Author
CHECKED BY:	Checker
COPYRIGHT:	

SHEET TITLE

DOUBLE SOFA BED DETAILS

I-539

8/13/2011 8:38:09 AM

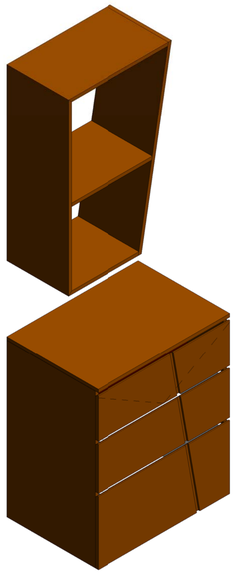

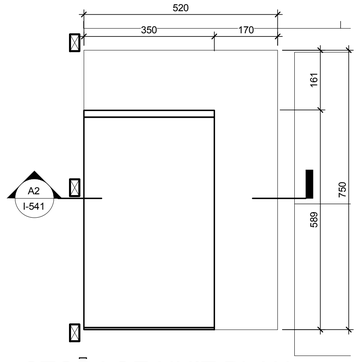

D2 STORAGE UNIT PLAN
1 : 8

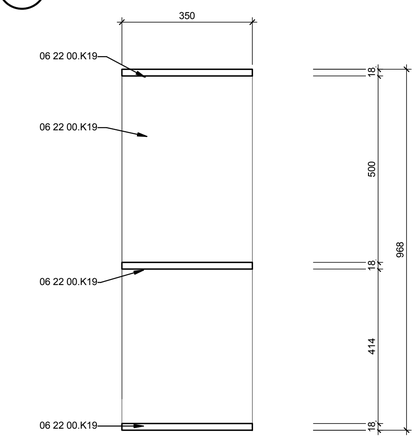

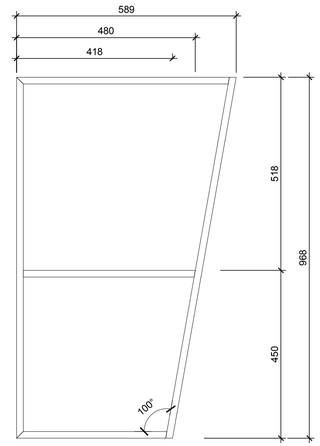

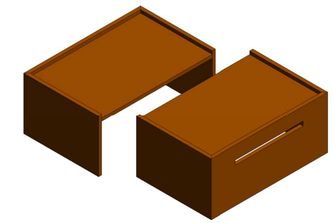

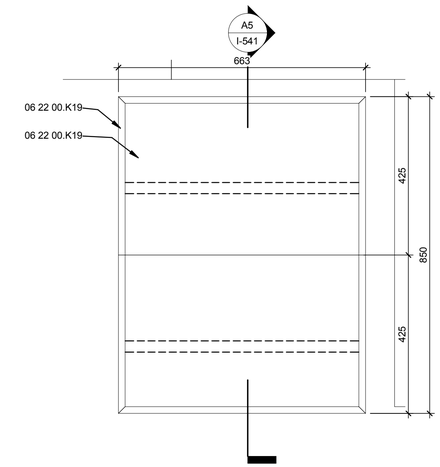

C5 OTTOMAN PLAN DETAILS
1 : 8

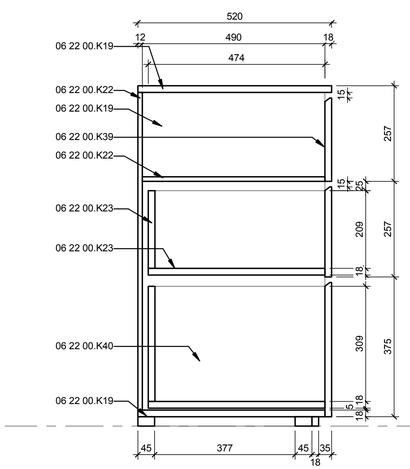

A2 STORAGE UNIT SECTION
1 : 8

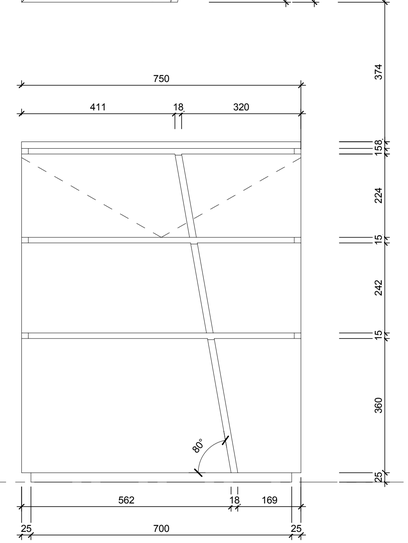

A4 BSTORAGE UNIT ELEVATION
1 : 8

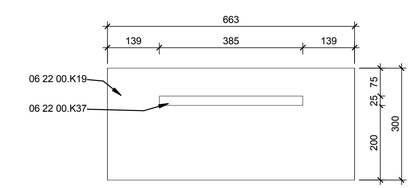

B5 OTTOMAN ELEVATION DETAILS
1 : 24

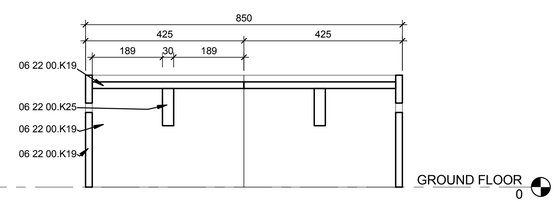

A5 OTTOMAN SECTION DETAILS
1 : 8

GENERAL SHEET NOTES

REFERENCE KEYNOTES

06 22 00.K19	18MM MDF WITH 'RIMU HEART' VENEER. RIMU EDGE TAPE APPLIED TO FRONT EDGE
06 22 00.K22	12MM HARDBOARD SHELF
06 22 00.K23	18MM WHITE MELTECA DRAWER CARCASS
06 22 00.K25	100 X 30MM TIMBER RUNNER
06 22 00.K37	25MM ROUTED FINGER HANDLE
06 22 00.K39	HETTICH FLAP STAY CENTRA S 20 & FLAP HINGE MARKANT 11
06 22 00.K40	HETTICH MULTITECH LS AND QUADRO V6 DRAWER RUNNERS TO LOWER DRAWERS

SHEET KEYNOTES

FIRST LIGHT NZ

TEAM NAME:	FIRST LIGHT
ADDRESS:	139 VIVIAN STREET TE ARO, WELLINGTON NEWZEALAND
CONTACT:	ELINUTTALL@GMAIL.COM WWW.FIRSTLIGHTHOUSE.AC.NZ

CONSULTANTS

TENNENT + BROWN ARCHITECTS
DUNNING THORNTON CONSULTANTS LTD
LEAP AUSTRALASIA LTD
SOUTHERN PERSPECTIVES / SOLAR CITY

CLIENT
U.S. DEPARTMENT OF ENERGY
SOLAR DECATHLON 2011
WWW.SOLARDECATHLON.GOV

U.S. DEPARTMENT OF ENERGY SOLAR DECATHLON

MARK	DATE	DESCRIPTION
CN	11-01-11	FOR CONSTRUCTION

LOT NUMBER:	LOT NUMBER
DRAWN BY:	Author
CHECKED BY:	Checker
COPYRIGHT:	

SHEET TITLE
BEDSIDE STORAGE UNIT AND OTTOMAN DETAILS

I-541

8/13/2011 8:38:20 AM

GENERAL SHEET NOTES

REFERENCE KEYNOTES

06 22 00.K19	18MM MDF WITH 'RIMU HEART' VENEER. RIMU EDGE TAPE APPLIED TO FRONT EDGE
06 22 00.K23	18MM WHITE MELTECA DRAWER CARCASS
06 22 00.K39	HETTICH FLAP STAY CENTRA S 20 & FLAP HINGE MARKANT 11
06 22 00.K41	2MM DEEP GROOVE TO ALLOW FOR EASY INSTALLATION OF ABOVE BUNK SHELVING UNIT
06 22 00.K42	BIFOLD BOTTOM TRACK ATTACHES TO BUNK SHELVING UNIT. REFER BIFOLD DOOR DETAILS
06 22 00.K43	SLIDING CABINET DOORS. HARDWARE TO BE HETTICH SLIDE LINE 55 PLUS
06 22 00.K44	20MM ROUTED FINGER HANDLE

SHEET KEYNOTES

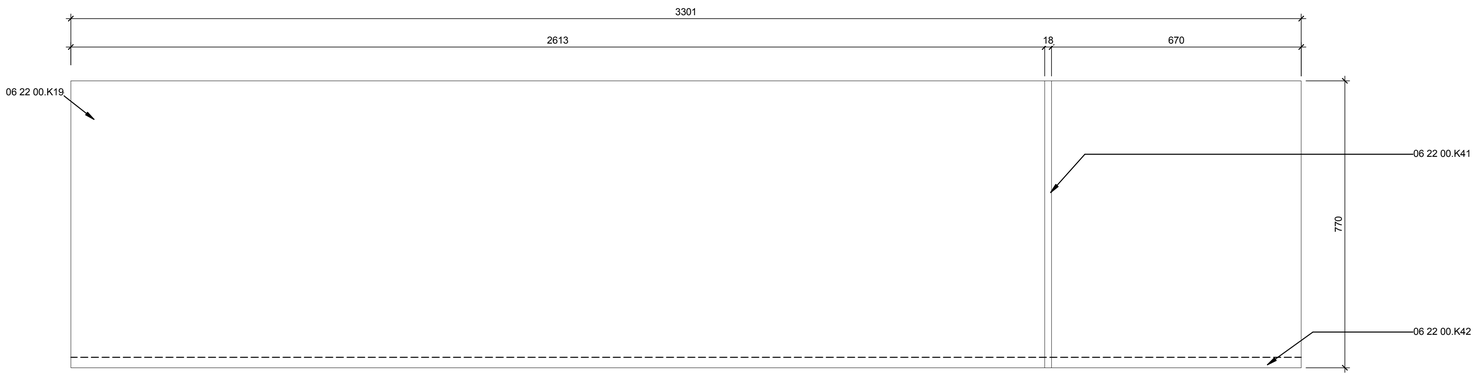

C1 BUNK BED DETAILS
1 : 8

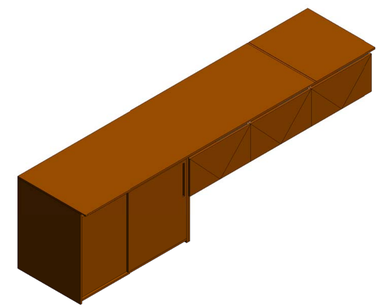

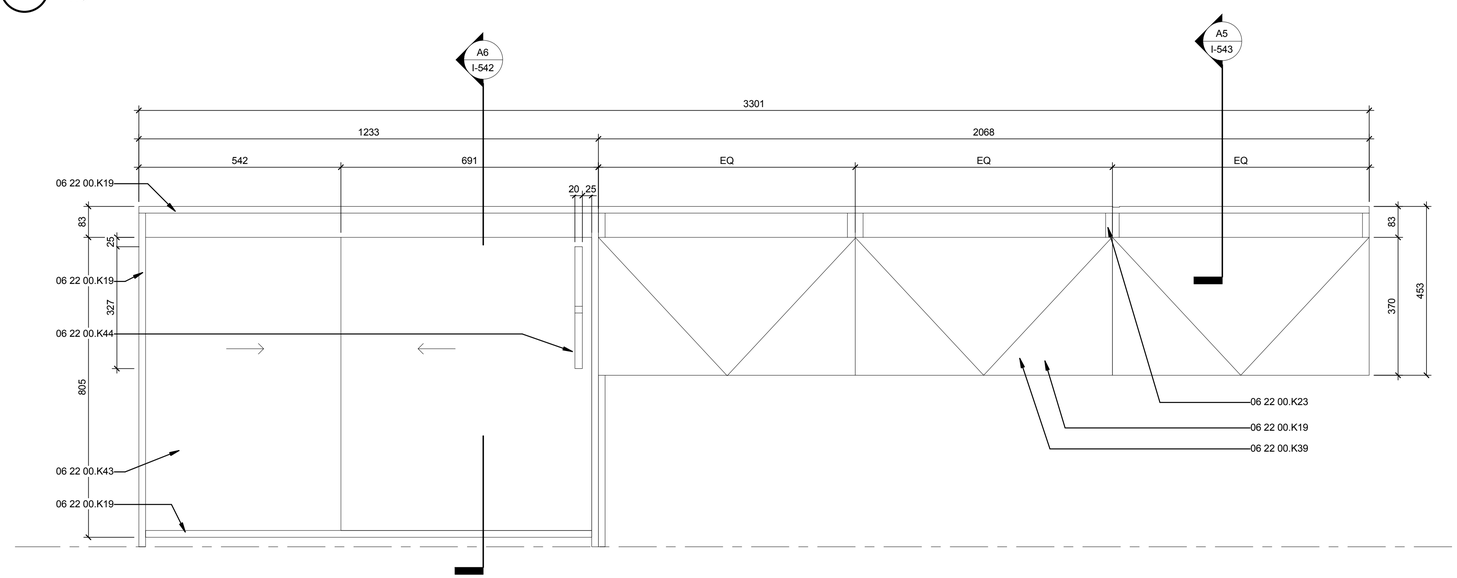

A1 BUNK BED ELEVATION
1 : 8

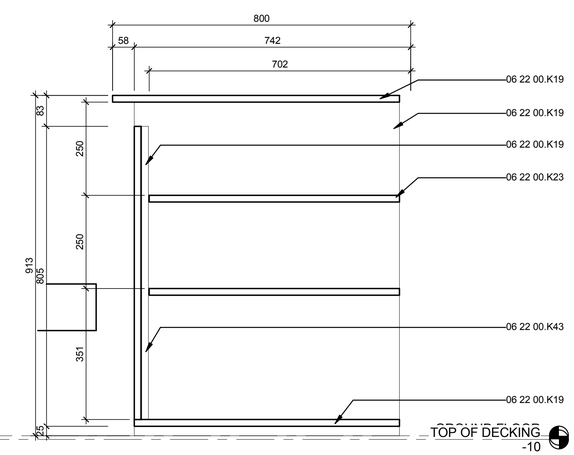

A6 BUNK BED SECTION 2
1 : 8

FIRST LIGHT NZ

TEAM NAME:	FIRST LIGHT
ADDRESS:	139 VIVIAN STREET TE ARO, WELLINGTON NEWZEALAND
CONTACT:	ELINUTTALL@GMAIL.COM WWW.FIRSTLIGHTHOUSE.AC.NZ

CONSULTANTS

TENNENT + BROWN ARCHITECTS
DUNNING THORNTON CONSULTANTS LTD
LEAP AUSTRALASIA LTD
SOUTHERN PERSPECTIVES / SOLAR CITY

CLIENT

U.S. DEPARTMENT OF ENERGY
SOLAR DECATHLON 2011
WWW.SOLARDECATHLON.GOV

U.S. DEPARTMENT OF ENERGY SOLAR DECATHLON

MARK	DATE	DESCRIPTION
CN	11-01-11	FOR CONSTRUCTION

LOT NUMBER:	LOT NUMBER
DRAWN BY:	Author
CHECKED BY:	Checker
COPYRIGHT:	

SHEET TITLE

BUNK BED DETAILS

I-542

8/13/2011 8:38:31 AM

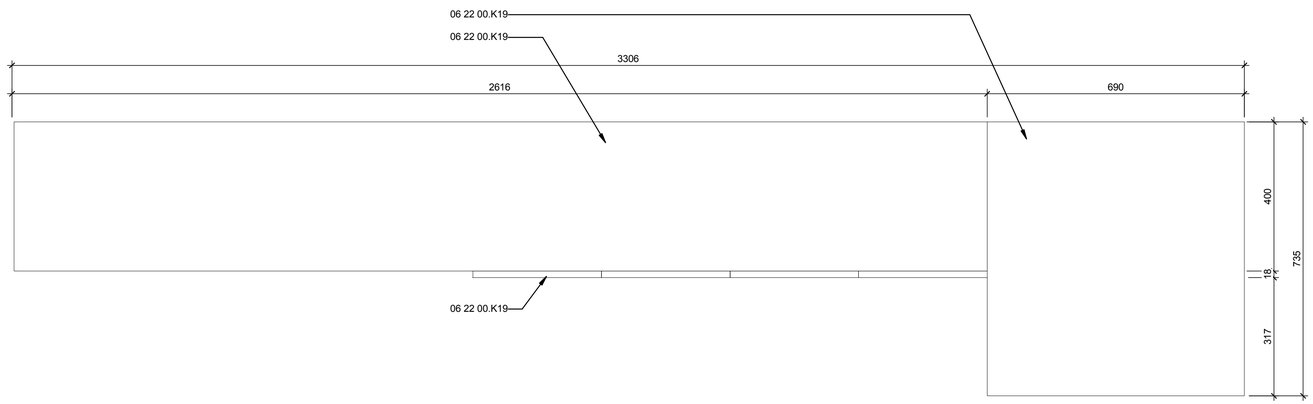

C1 ABOVE BUNK SHELVING PLAN
1 : 8

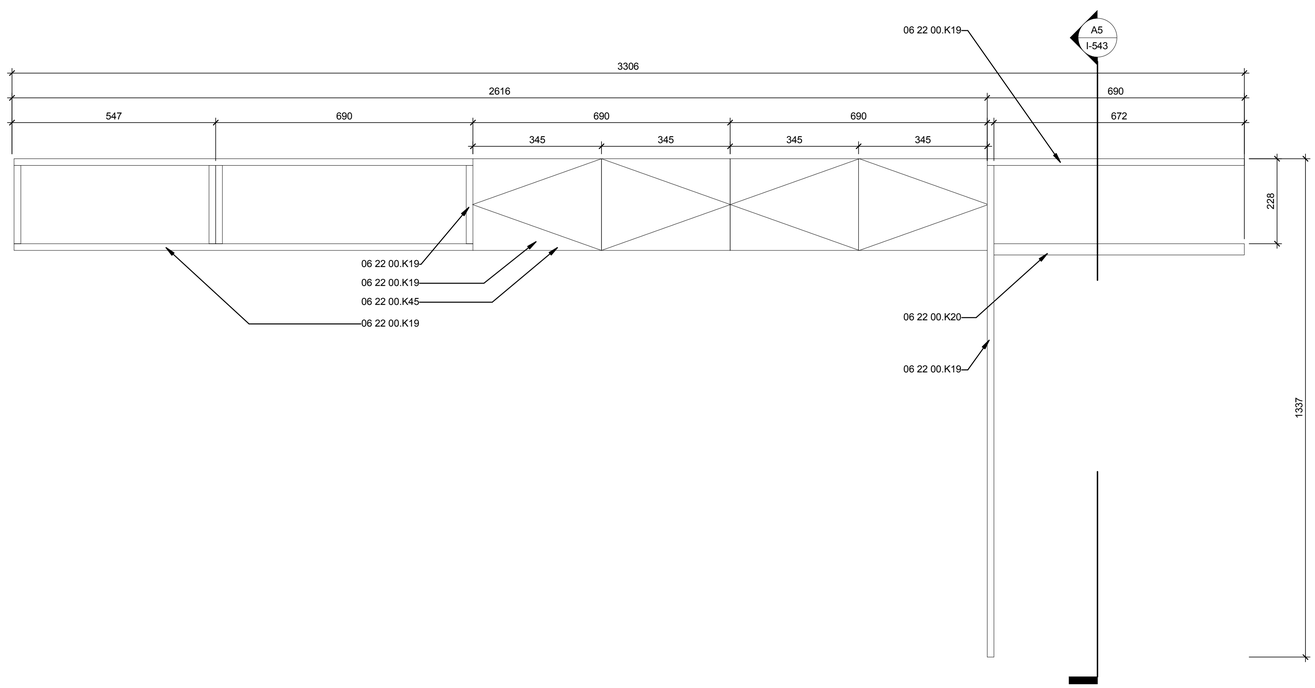

A1 ABOVE BUNK SHELVING ELEVATION
1 : 8

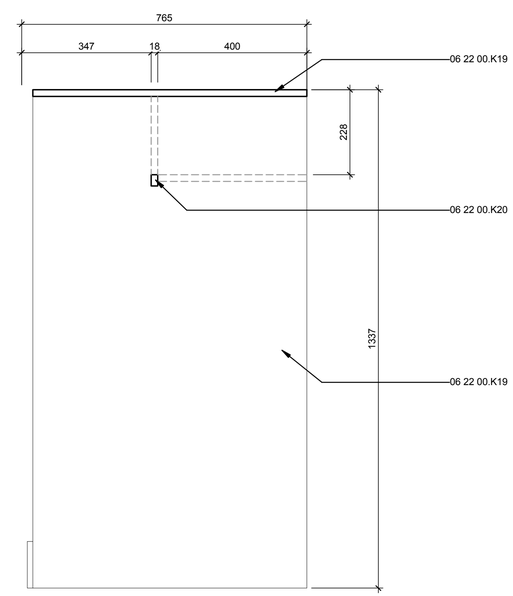

A5 TOP OF BUNK SHELVING SECTION
1 : 24

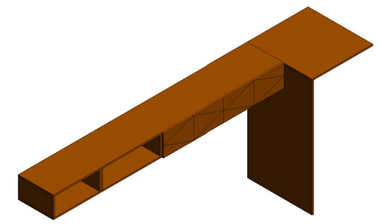

GENERAL SHEET NOTES

REFERENCE KEYNOTES

06 22 00.K19	18MM MDF WITH 'RIMU HEART' VENEER. RIMU EDGE TAPE APPLIED TO FRONT EDGE
06 22 00.K20	ALUMINIUM BAR FIXED TO JOINERY UNIT TO CREATE HANGING SPACE
06 22 00.K45	MAGNETIC PUSH TO OPEN DOORS. HETTICH HARDWARE TBC

SHEET KEYNOTES

FIRST LIGHT NZ

TEAM NAME:	FIRST LIGHT
ADDRESS:	139 VIVIAN STREET TE ARO, WELLINGTON NEWZEALAND
CONTACT:	ELINUTTALL@GMAIL.COM WWW.FIRSTLIGHTHOUSE.AC.NZ

CONSULTANTS

TENNENT + BROWN ARCHITECTS
DUNNING THORNTON CONSULTANTS LTD
LEAP AUSTRALASIA LTD
SOUTHERN PERSPECTIVES / SOLAR CITY

CLIENT

U.S. DEPARTMENT OF ENERGY
SOLAR DECATHLON 2011
WWW.SOLARDECATHLON.GOV

U.S. DEPARTMENT OF ENERGY SOLAR DECATHLON

MARK	DATE	DESCRIPTION
CN	11-01-11	FOR CONSTRUCTION

LOT NUMBER:	LOT NUMBER
DRAWN BY:	Author
CHECKED BY:	Checker
COPYRIGHT:	

SHEET TITLE

ABOVE BUNK SHELVING DETAILS

I-543

8/13/2011 8:38:41 AM

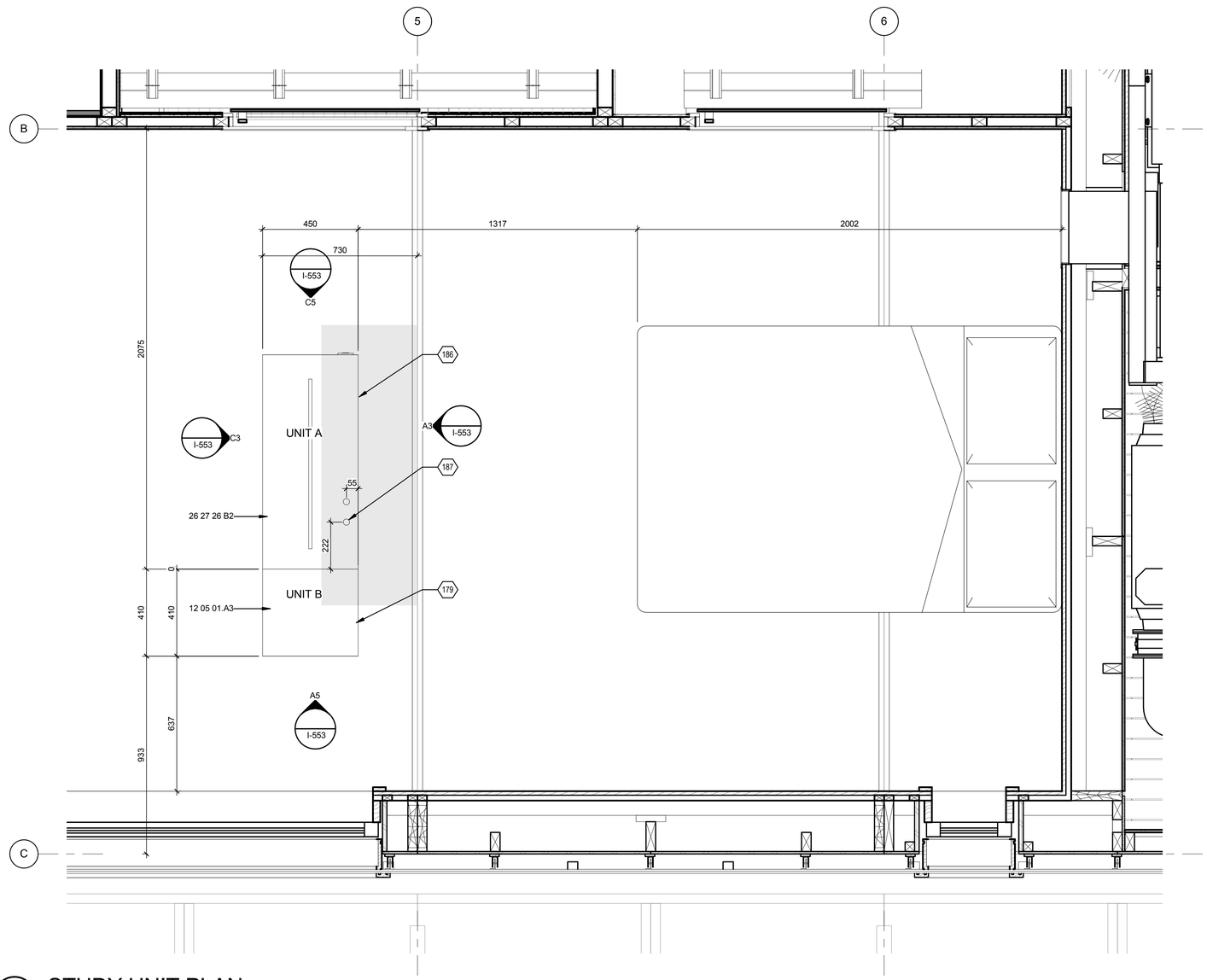

A1 STUDY UNIT PLAN
1 : 24

0 2' 4' 8'

GENERAL SHEET NOTES

REFERENCE KEYNOTES

12 05 01.A3	REMOVABLE SECTION OF WORKSTATION JOINERY UNIT
26 27 26 B2	PDL 800 SERIES 10A 240V VERTICAL INTEGRALLY SWITCHED DOUBLE RECEPTACLE

SHEET KEYNOTES

179	BOOKSHELF (UNIT B) SEPARATE FROM DESK (UNIT A). UNIT B TO BE REMOVED DURING PUBLIC EXHIBIT DAYS FOR ACCESSIBILITY REQUIREMENTS
186	STUDY UNIT SHOWN IN PUBLIC EXHIBIT POSITION THROUGHOUT DRAWING SET. NON-EXHIBIT POSITION SHOWN SHADED GREY.
187	ELECTRICITY AND DATA CABLING BOUGHT UP THROUGH FLOOR

FIRST LIGHT NZ

TEAM NAME:	FIRSTLIGHT NZ
ADDRESS:	139 VIVIAN STREET TE ARO, WELLINGTON NEWZEALAND
CONTACT:	INFO@FIRSTLIGHTHOUSE.AC.NZ WWW.FIRSTLIGHTHOUSE.AC.NZ

CONSULTANTS

TENNENT + BROWN ARCHITECTS
DUNNING THORNTON CONSULTANTS LTD
LEAP AUSTRALASIA LTD
SOUTHERN PERSPECTIVES / SOLAR CITY

CLIENT

U.S. DEPARTMENT OF ENERGY
SOLAR DECATHLON 2011
WWW.SOLARDECATHLON.GOV

U.S. DEPARTMENT OF ENERGY SOLAR DECATHLON

MARK	DATE	DESCRIPTION
CN	11-01-11	FOR CONSTRUCTION

LOT NUMBER:	LOT NUMBER
DRAWN BY:	Author
CHECKED BY:	Checker
COPYRIGHT:	VICTORIA UNIVERSITY

SHEET TITLE

STUDY UNIT PLAN

I-551

8/13/2011 8:38:46 AM

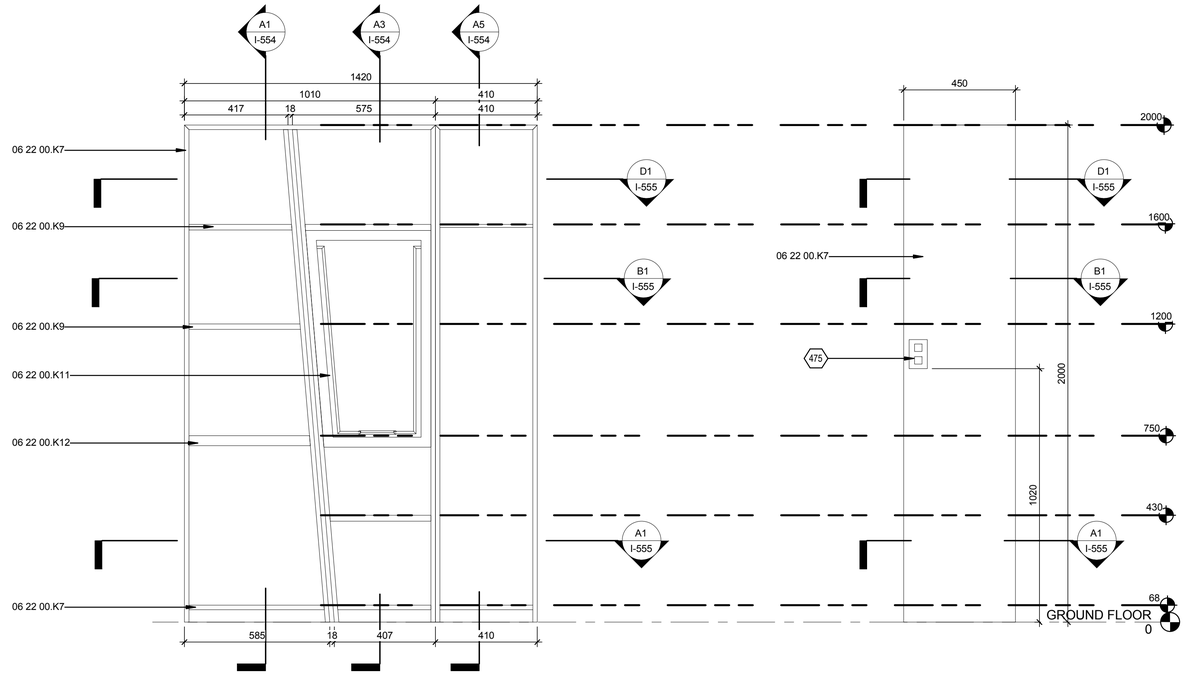

C3 FRONT / LIVING ROOM ELEVATION
1 : 12

C5 ELEVATION - UNIT A
1 : 12

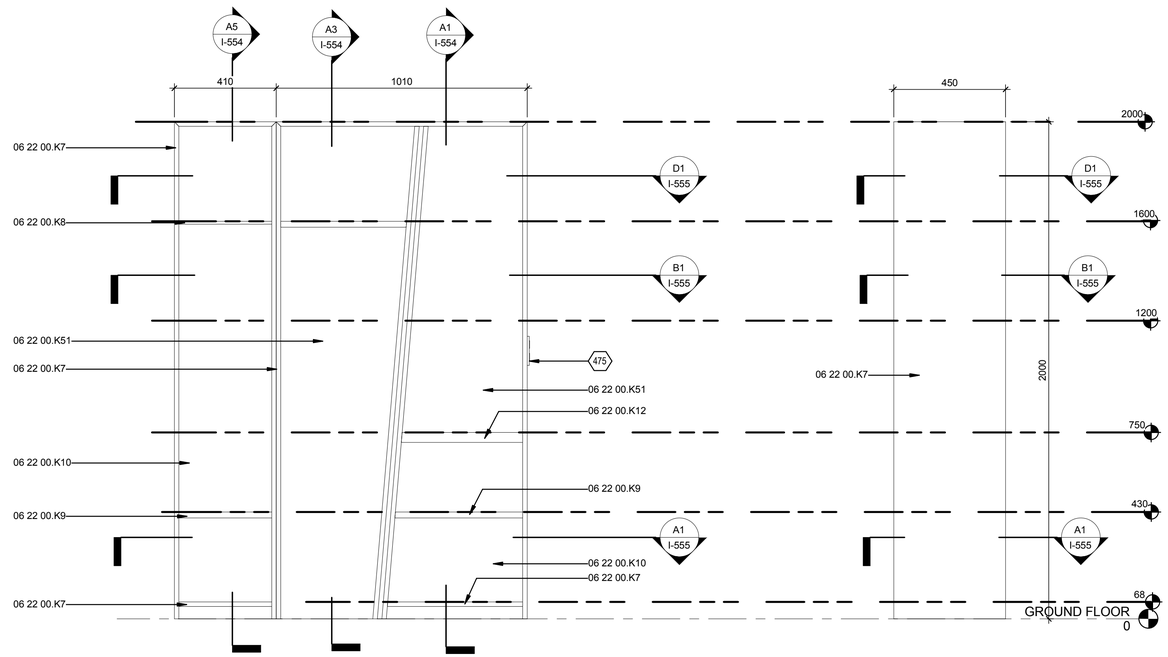

A3 BACK / BEDROOM ELEVATION
1 : 12

A5 ELEVATION - UNIT B
1 : 12

0 1/2' 1' 2'

GENERAL SHEET NOTES

REFERENCE KEYNOTES

06 22 00.K7	STRUCTURAL FRAMES TO BE 18MM PLYWOOD - MITRED AT EDGES
06 22 00.K8	12MM PLY SHELF
06 22 00.K9	24MM PLY SHELF
06 22 00.K10	18MM PLYWOOD BACKBOARD
06 22 00.K11	12MM PLYWOOD BACKBOARD
06 22 00.K12	40MM PLYWOOD BENCH
06 22 00.K51	18MM REMOVABLE PLYWOOD PANEL TO ALLOW ELECTRICAL AND DATA WIRING OF UNIT ON SITE

SHEET KEYNOTES

475	PUSH BUTTON SWITCH FOR BEDROOM LIGHTS AND OVER-UNIT STRIP LIGHT

FIRST LIGHT NZ

TEAM NAME: FIRST LIGHT
ADDRESS: 139 VIVIAN STREET
TE ARO, WELLINGTON
NEWZEALAND
CONTACT: ELINUTTALL@GMAIL.COM
WWW.FIRSTLIGHTHOUSE.AC.NZ

CONSULTANTS

TENNENT + BROWN ARCHITECTS
DUNNING THORNTON CONSULTANTS LTD
LEAP AUSTRALASIA LTD
SOUTHERN PERSPECTIVES / SOLAR CITY

CLIENT
U.S. DEPARTMENT OF ENERGY
SOLAR DECATHLON 2011
WWW.SOLARDECATHLON.GOV

U.S. DEPARTMENT OF ENERGY SOLAR DECATHLON

MARK	DATE	DESCRIPTION
CN	11-01-11	FOR CONSTRUCTION

LOT NUMBER: LOT NUMBER
DRAWN BY: Author
CHECKED BY: Checker
COPYRIGHT:

SHEET TITLE
STUDY UNIT ELEVATIONS

I-553

8/13/2011 8:38:50 AM

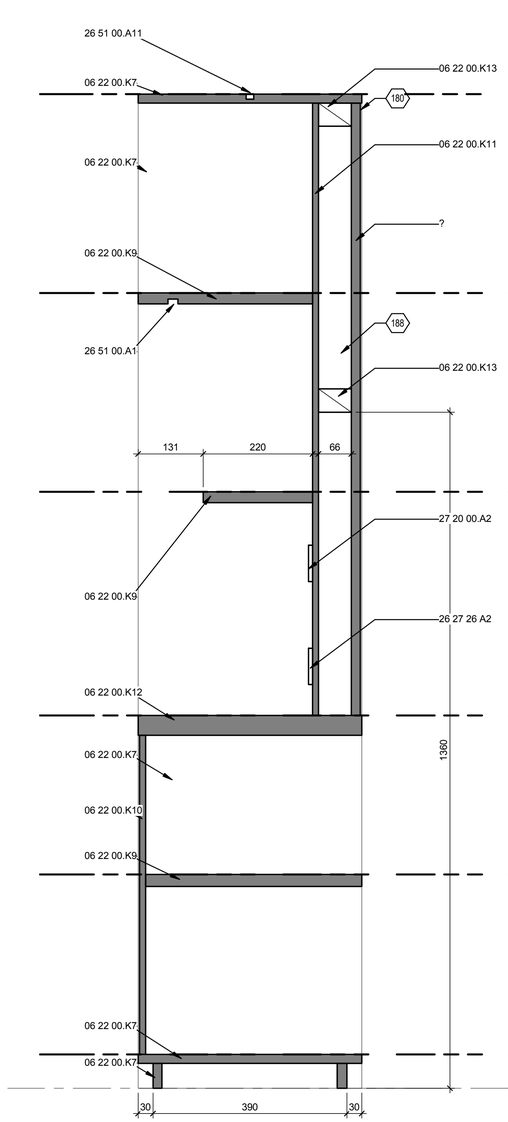

A1 STUDY UNIT - SECTION 1
1 : 6

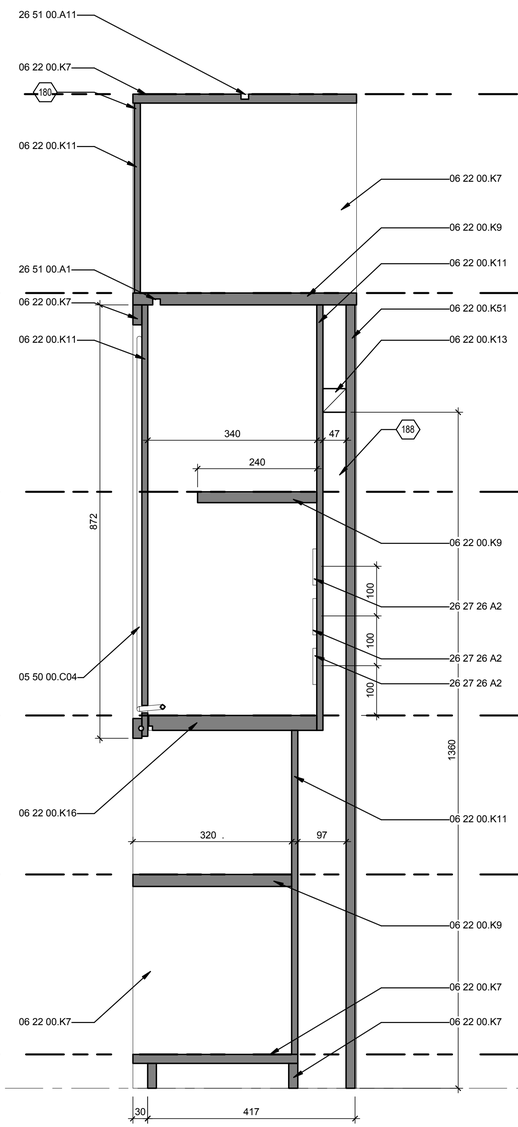

A3 STUDY UNIT - SECTION 2
1 : 6

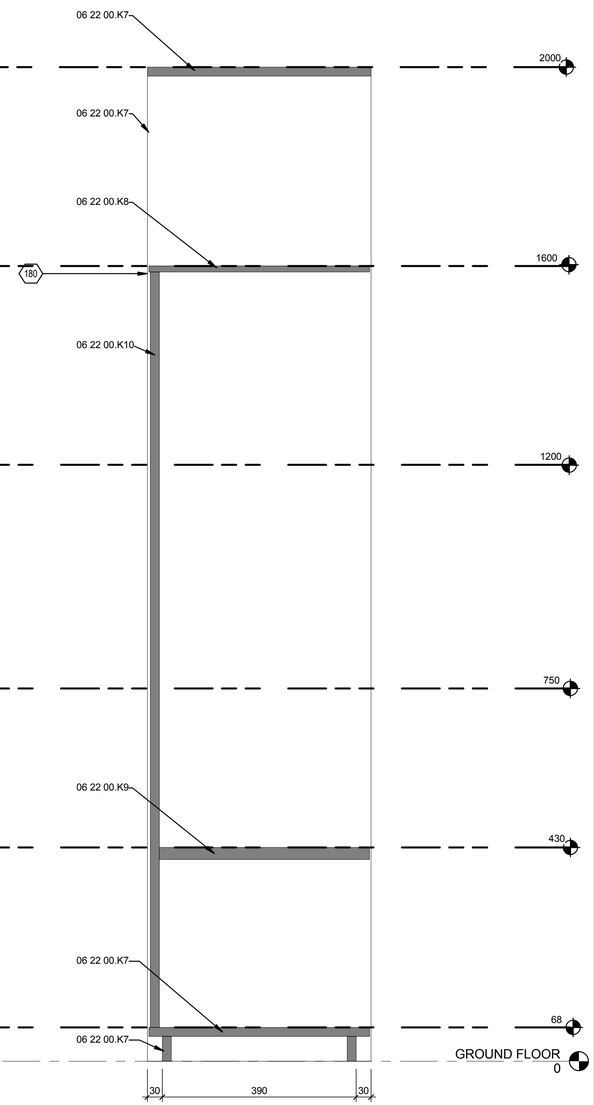

A5 STUDY UNIT - SECTION 3
1 : 6

0 1/2' 1' 2'

GENERAL SHEET NOTES

REFERENCE KEYNOTES

05 50 00.C04	10MM DIA BENT STEEL LEG
06 22 00.K7	STRUCTURAL FRAMES TO BE 18MM PLYWOOD - MITRED AT EDGES
06 22 00.K8	12MM PLY SHELF
06 22 00.K9	24MM PLY SHELF
06 22 00.K10	18MM PLYWOOD BACKBOARD
06 22 00.K11	12MM PLYWOOD BACKBOARD
06 22 00.K12	40MM PLYWOOD BENCH
06 22 00.K13	BLOCKING TO SUPPORT TV/ARTWORK HUNG ON BEDROOM SIDE
06 22 00.K16	30MM PLYWOOD BENCH - LEVEL WITH DESK WHEN FOLDED OUT
06 22 00.K51	18MM REMOVABLE PLYWOOD PANEL TO ALLOW ELECTRICAL AND DATA WIRING OF UNIT ON SITE
26 27 26 A2	PDL 800 SERIES 10A 240V HORIZONTAL INTEGRALLY SWITCHED DOUBLE RECEPTACLE
26 51 00.A1	6W RECESSED LED DOWNLIGHT
26 51 00.A11	800MM LED STRIP MOUNTED IN 10MM D X 15MM W X 800MM L CHANNEL RECESSED INTO UNIT
27 20 00.A2	DATA OUTLET

SHEET KEYNOTES

180	3MM QUIRK FOR ALL PANEL/FRAME CONNECTIONS TO BOOKSHELF/DESK UNITS
188	WIRING CAVITY - BACK BOARD REMOVABLE TO ALLOW ACCESS

FIRST LIGHT NZ

TEAM NAME:	FIRST LIGHT
ADDRESS:	139 VIVIAN STREET TE ARO, WELLINGTON NEWZEALAND
CONTACT:	ELINUTTALL@GMAIL.COM WWW.FIRSTLIGHTHOUSE.AC.NZ

CONSULTANTS

TENNENT + BROWN ARCHITECTS

DUNNING THORNTON CONSULTANTS LTD

LEAP AUSTRALASIA LTD

SOUTHERN PERSPECTIVES / SOLAR CITY

CLIENT

U.S. DEPARTMENT OF ENERGY

SOLAR DECATHLON 2011

WWW.SOLARDECATHLON.GOV

U.S. DEPARTMENT OF ENERGY SOLAR DECATHLON

MARK	DATE	DESCRIPTION
CN	11-01-11	FOR CONSTRUCTION

LOT NUMBER:	LOT NUMBER
DRAWN BY:	Author
CHECKED BY:	Checker
COPYRIGHT:	

SHEET TITLE

STUDY UNIT SECTIONS

I-554

8/13/2011 8:38:55 AM

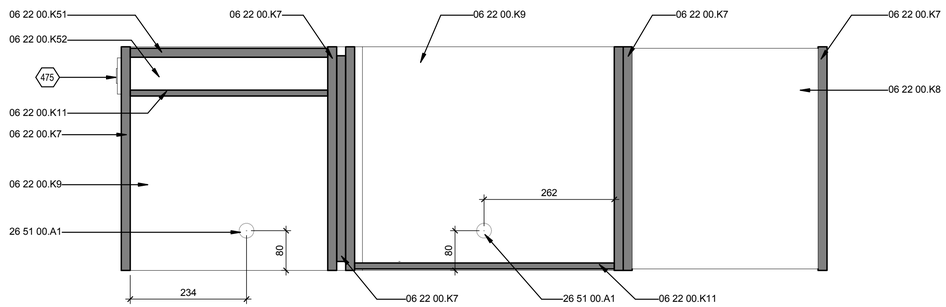

D1 STUDY UNIT PLAN SECTION 01

1 : 6

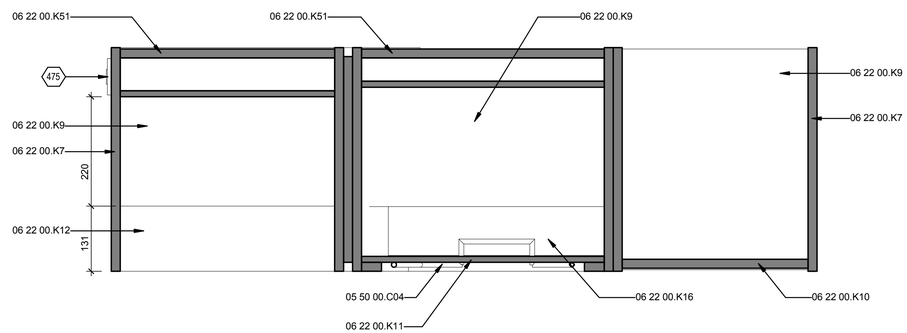

B1 STUDY UNIT PLAN SECTION 02

1 : 6

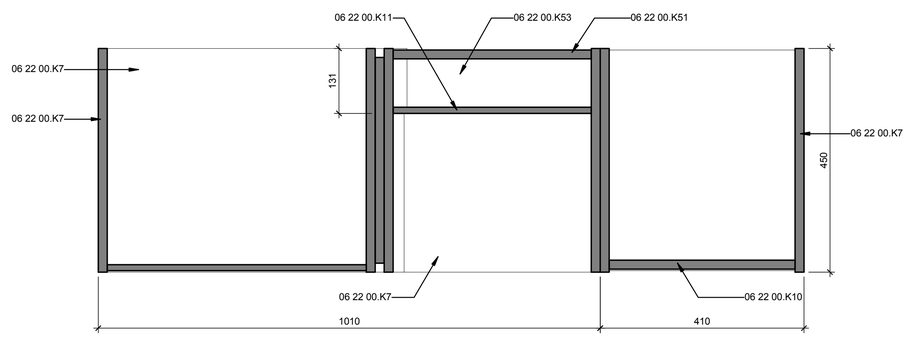

A1 STUDY UNIT PLAN SECTION 03

1 : 6

0 1/2' 1' 2'

GENERAL SHEET NOTES

REFERENCE KEYNOTES

05 50 00.C04	10MM DIA BENT STEEL LEG
06 22 00.K7	STRUCTURAL FRAMES TO BE 18MM PLYWOOD - MITRED AT EDGES
06 22 00.K8	12MM PLY SHELF
06 22 00.K9	24MM PLY SHELF
06 22 00.K10	18MM PLYWOOD BACKBOARD
06 22 00.K11	12MM PLYWOOD BACKBOARD
06 22 00.K12	40MM PLYWOOD BENCH
06 22 00.K16	30MM PLYWOOD BENCH - LEVEL WITH DESK WHEN FOLDED OUT
06 22 00.K51	18MM REMOVABLE PLYWOOD PANEL TO ALLOW ELECTRICAL AND DATA WIRING OF UNIT ON SITE
06 22 00.K52	50MM CAVITY FOR WIRING
06 22 00.K53	NO SHELF AT BOTTOM OF WIRING CAVITY TO PROVIDE ACCESS TO SERVICES THROUGH FLOOR
26 51 00.A1	6W RECESSED LED DOWNLIGHT

SHEET KEYNOTES

475	PUSH BUTTON SWITCH FOR BEDROOM LIGHTS AND OVER-UNIT STRIP LIGHT

FIRST LIGHT NZ

TEAM NAME:	FIRST LIGHT
ADDRESS:	139 VIVIAN STREET TE ARO, WELLINGTON NEWZEALAND
CONTACT:	ELINUTTALL@GMAIL.COM WWW.FIRSTLIGHTHOUSE.AC.NZ

CONSULTANTS

TENNENT + BROWN ARCHITECTS

DUNNING THORNTON CONSULTANTS LTD

LEAP AUSTRALASIA LTD

SOUTHERN PERSPECTIVES / SOLAR CITY

CLIENT

U.S. DEPARTMENT OF ENERGY

SOLAR DECATHLON 2011

WWW.SOLARDECATHLON.GOV

U.S. DEPARTMENT OF ENERGY SOLAR DECATHLON

MARK	DATE	DESCRIPTION
CN	11-01-11	FOR CONSTRUCTION

LOT NUMBER:	LOT NUMBER
DRAWN BY:	Author
CHECKED BY:	Checker
COPYRIGHT:	

SHEET TITLE

STUDY UNIT PLAN SECTIONS

I-555

8/13/2011 8:38:59 AM

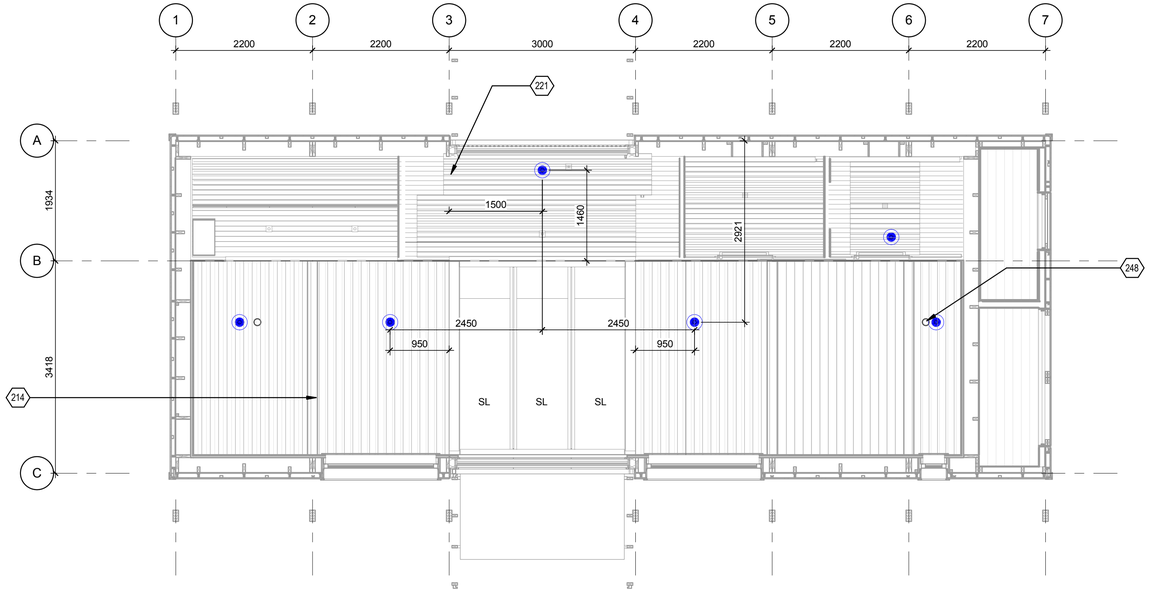

A2 FIRST SPRINKLER PLAN

1 : 48

0 2' 4' 8'

GENERAL SHEET NOTES

1.
NOTE LANDSCAPING AND CANOPY ELEMENTS ARE NOT SHOWN IN THIS VIEW FOR CLARITY

REFERENCE KEYNOTES

SHEET KEYNOTES

214	INTERNAL CEILING HEIGHT SUBJECT TO CHANGE DUE TO MATERIAL SELECTION AND FINAL HEIGHT OF PREFABRICATED ROOF SECTIONS. TO BE CONFIRMED
221	CEILING SPACE TO BE ACCESSIBLE ALONG ALL MODULE JOINS
248	CENTRALLY LINKED SMOKE ALARM, TYPE TO BE CONFIRMED

FIRST LIGHT NZ

TEAM NAME:	FIRST LIGHT
ADDRESS:	139 VIVIAN STREET TE ARO, WELLINGTON NEWZEALAND
CONTACT:	ELINUTTALL@GMAIL.COM WWW.FIRSTLIGHTHOUSE.AC.NZ

CONSULTANTS

TENNENT + BROWN ARCHITECTS
DUNNING THORNTON CONSULTANTS LTD
LEAP AUSTRALASIA LTD
SOUTHERN PERSPECTIVES / SOLAR CITY

CLIENT

U.S. DEPARTMENT OF ENERGY
SOLAR DECATHLON 2011
WWW.SOLARDECATHLON.GOV

U.S. DEPARTMENT OF ENERGY SOLAR DECATHLON

MARK	DATE	DESCRIPTION
CN	11-01-11	FOR CONSTRUCTION

LOT NUMBER:	LOT NUMBER
DRAWN BY:	AUTHOR
CHECKED BY:	CHECKER

COPYRIGHT:

SHEET TITLE

FIRE DETECTION AND ALARM

F-101

8/13/2011 8:30:20 AM

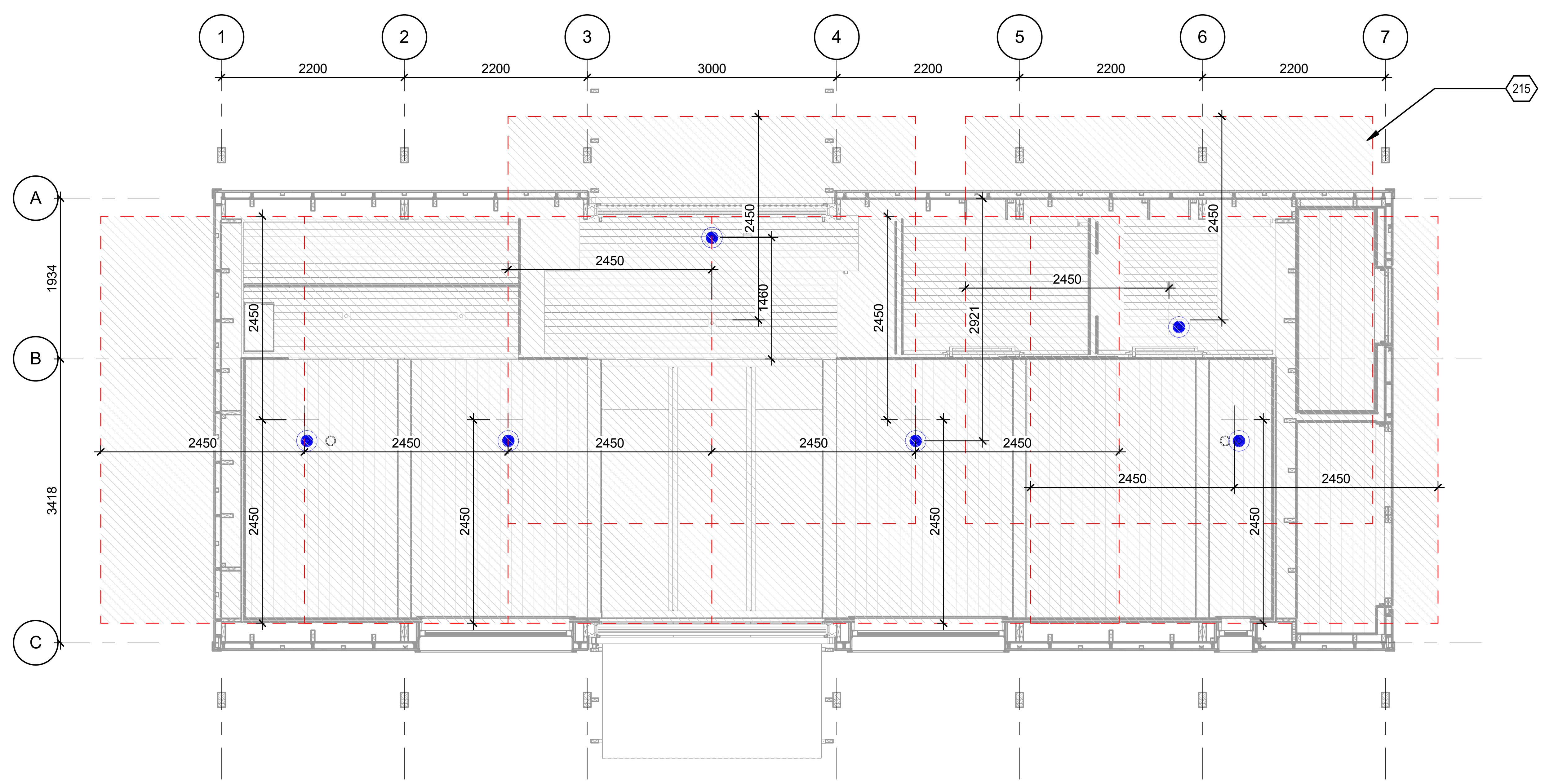

A2 SPRINKLER COVERAGE
1 : 48

0 2' 4' 8'

8/13/2011 8:30:25 AM

GENERAL SHEET NOTES

1.
NOTE LANDSCAPING AND CANOPY ELEMENTS ARE NOT SHOWN IN THIS VIEW FOR CLARITY

REFERENCE KEYNOTES

SHEET KEYNOTES

215	HATCHED AREAS DENOTE AREAS OF SPRINKLER COVERAGE

FIRST LIGHT NZ

TEAM NAME:	FIRST LIGHT
ADDRESS:	139 VIVIAN STREET TE ARO, WELLINGTON NEWZEALAND
CONTACT:	ELINUTTALL@GMAIL.COM WWW.FIRSTLIGHTHOUSE.AC.NZ

CONSULTANTS

TENNENT + BROWN ARCHITECTS
DUNNING THORNTON CONSULTANTS LTD
LEAP AUSTRALASIA LTD
SOUTHERN PERSPECTIVES / SOLAR CITY

CLIENT

U.S. DEPARTMENT OF ENERGY
SOLAR DECATHLON 2011
WWW.SOLARDECATHLON.GOV

U.S. DEPARTMENT OF ENERGY SOLAR DECATHLON

MARK	DATE	DESCRIPTION
CN	11-01-11	FOR CONSTRUCTION

LOT NUMBER:	LOT NUMBER
DRAWN BY:	Author
CHECKED BY:	Checker
COPYRIGHT:	

SHEET TITLE

SPRINKLER COVERAGE PLAN

F-102

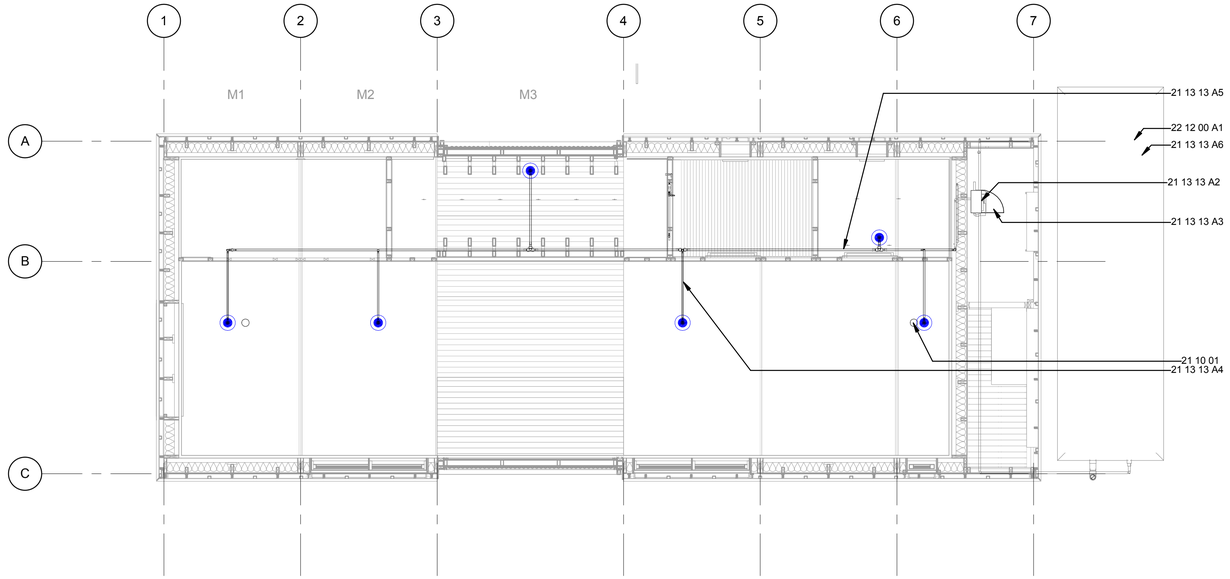

A2 SPRINKLER PIPEWORK LAYOUT
1 : 48

0 2' 4' 8'

GENERAL SHEET NOTES

1.
NOTE LANDSCAPING AND CANOPY ELEMENTS ARE NOT SHOWN IN THIS VIEW FOR CLARITY

REFERENCE KEYNOTES

21 10 01	FLUSH MOUNTED SMOKE ALARM CENTRALLY LINKED
21 13 13 A2	EQ DHF 460 FIRE SUPPRESSION PRESSURE PUMP
21 13 13 A3	BLAZESTOP SPRINKLER CONTROL BOX
21 13 13 A4	22MM HEP20 POLYBUTYLENE SPRINKLER BRANCH PIPING
21 13 13 A5	28MM HEP20 POLYBUTYLENE MAIN BRANCH PIPING IN BULKHEAD
21 13 13 A6	SPRINKLER SYSTEM FED FROM FRESH WATER SUPPLY TANK - LOCATED UNDERNEATH DECKING
22 12 00 A1	3295 LITRES / 870 GALLONS POTABLE WATER SUPPLY LOCATED UNDERNEATH DECKING. TANK TO BE 'WET EARTH' BLADDER TANK - 6100 X 1800 X 300MM

SHEET KEYNOTES

FIRST LIGHT NZ

TEAM NAME:	FIRSTLIGHT NZ
ADDRESS:	139 VIVIAN STREET TE ARO, WELLINGTON NEWZEALAND
CONTACT:	INFO@FIRSTLIGHTHOUSE.AC.NZ WWW.FIRSTLIGHTHOUSE.AC.NZ

CONSULTANTS

TENNENT + BROWN ARCHITECTS

DUNNING THORNTON CONSULTANTS LTD

LEAP AUSTRALASIA LTD

SOUTHERN REPRESENTATIVES / SOLAR CITY

CN	2-02-2011	FOR CONSTRUCTION

CLIENT

U.S. DEPARTMENT OF ENERGY
SOLAR DECATHLON 2011
WWW.SOLARDECATHLON.GOV

U.S. DEPARTMENT OF ENERGY SOLAR DECATHLON

MARK	DATE	DESCRIPTION
CN	2-02-2011	FOR CONSTRUCTION

LOT NUMBER:	LOT NUMBER
DRAWN BY:	AUTHOR
CHECKED BY:	CHECKER
COPYRIGHT:	VICTORIA UNIVERSITY

SHEET TITLE

FIRE PROTECTION PIPING LAYOUT PLAN

F-103

8/13/2011 8:30:32 AM

A1 SPRINKLER ISOMETRIC

8/13/2011 8:30:45 AM

GENERAL SHEET NOTES

REFERENCE KEYNOTES

SHEET KEYNOTES

FIRST LIGHT NZ

TEAM NAME:	FIRST LIGHT
ADDRESS:	139 VIVIAN STREET TE ARO, WELLINGTON NEWZEALAND
CONTACT:	ELINUTTALL@GMAIL.COM WWW.FIRSTLIGHTHOUSE.AC.NZ

CONSULTANTS

TENNENT + BROWN ARCHITECTS
DUNNING THORNTON CONSULTANTS LTD
LEAP AUSTRALASIA LTD
SOUTHERN PERSPECTIVES / SOLAR CITY

CLIENT

U.S. DEPARTMENT OF ENERGY
SOLAR DECATHLON 2011
WWW.SOLARDECATHLON.GOV

U.S. DEPARTMENT OF ENERGY SOLAR DECATHLON

MARK	DATE	DESCRIPTION
CN	11-01-11	FOR CONSTRUCTION

LOT NUMBER:	LOT NUMBER
DRAWN BY:	AUTHOR
CHECKED BY:	CHECKER

COPYRIGHT:

SHEET TITLE

FIRE SUPPRESSION ISOMETRIC

F-900

PIPE LEGEND

- MAIN WATER PIPE
- SECUNDARY WATER PIPE
- ELECTRIC SIGNAL
- CHANGE OF SPECIFICATION/DIAMETER (XXX XXX)
- PIPE CAP
- DRAIN
- 3% SLOPE REQUIRED

PIPE SPECIFICATION

XXX XX

- NOMINAL DIAMETER (mm)
- PIPE MATERIAL

PIPE MATERIAL

PAP	:	PEX-AL-PEX
CPP	:	COPPER
PE	:	POLYETHYLENE
PB	:	POLYBUTYLENE
SS	:	STAINLESS STEEL

CONTROL VALVE (MOTORIZED)

- ON/OFF VALVE
- 3 PORT BALL VALVE
- 3 PORT MIXING VALVE
- 3 PORT DIVERTING/MIXING VALVE

MANUAL VALVE

- BALL VALVE
- CHECK VALVE
- TEMPERATURE REGULATOR VALVE
- PRESSURE REGULATOR VALVE
- AUTOMATIC AIR VENT
- Y STRAINER
- GATE VALVE
- GLOBE VALVE
- PRESSURE SAFETY VALVE
- 3 PORT DIVERTING VALVE
- TEMPERING VALVE (C H)
- SOLAR TRANSFER VALVE
- THERMOSTATIC VALVE
- FLOW METER/BALANCING VALVE (F)
- PULSE VALVE (WETBACK)
- BYPASS VALVE
- AUTOMATIC AIR SEPARATOR

EQUIPMENT

- CENTRIFUGAL PUMP
- DUST FILTER (F)
- EXPANSION TANK (xL)
- FLEXIBLE CONNECTION

KEY WORDS

FO	VALVE FAIL OPEN
FC	VALVE FAIL CLOSED
NC	VALVE NORMALLY CLOSED
NO	VALVE NORMALLY OPEN
Vx	VALVE TAG
Cx	COIL TAG
Px	PUMP TAG
S.P.	SET POINT
VSP	VARIABLE SPEED PUMP

INSTRUMENTS

- TT TEMPERATURE TRANSMITTER
- PT PRESSURE TRANSMITTER
- TG TEMPERATURE GAUGE
- PG PRESURE GAUGE

CONTROL

- Tx ROOM THERMOSTAT
- Fx FLOOR SENSOR
- ELECTRIC ACTUATOR
- MANIFOLD VALVE
- MANIFOLD MANUAL FLOW CONTROLLER
- E ELECTRIC ELEMENT
- RC REMOTE CONTROL
- TC TIMER CONTROL
- M MOTOR
- MANUAL SWITCH (ON/OFF)
- MANUAL ACTUATOR
- STRAP-ON PIPE THERMOSTAT (MANUAL SETTING)
- LEVEL SWITCH
- WATER FLOW SWITCH
- I ELECTRICAL SIGNAL FROM/TO CONTROL PANEL
- ALARM

FIRST LIGHT NZ

TEAM NAME:	FIRSTLIGHT NZ
ADDRESS:	139 VIVIAN STREET TE ARO, WELLINGTON NEWZEALAND
CONTACT:	INFO@FIRSTLIGHTHOUSE.AC.NZ WWW.FIRSTLIGHTHOUSE.AC.NZ

CONSULTANTS

- TENNENT + BROWN ARCHITECTS
- DUNNING THORNTON CONSULTANTS LTD
- LEAP AUSTRALASIA LTD
- SOUTHERN PERSPECTIVES / SOLAR CITY

CLIENT

U.S. DEPARTMENT OF ENERGY
SOLAR DECATHLON 2011
WWW.SOLARDECATHLON.GOV

U.S. DEPARTMENT OF ENERGY SOLAR DECATHLON

MARK	DATE	DESCRIPTION
CN	11-01-11	FOR CONSTRUCTION

LOT NUMBER:	LOT NUMBER
DRAWN BY:	AUTHOR
CHECKED BY:	CHECKER
COPYRIGHT:	VICTORIA UNIVERSITY

SHEET TITLE

PLUMBING SYMBOLS AND NOTES

P-001

8/13/2011 8:46:54 AM

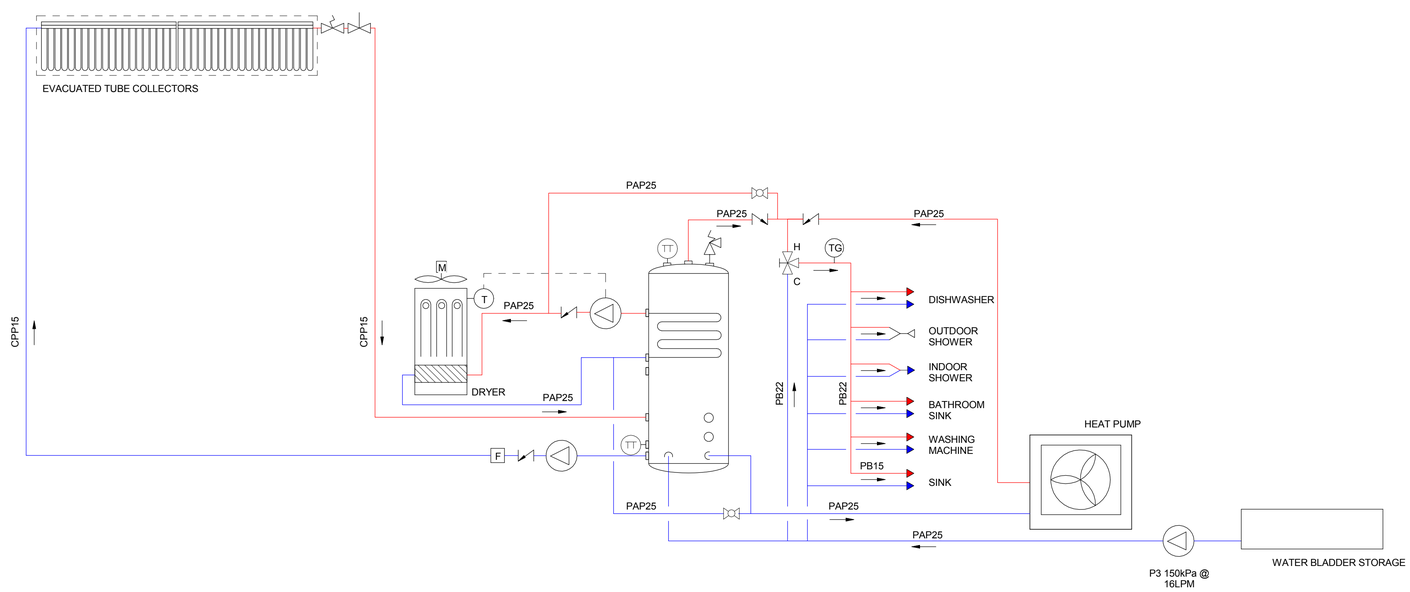

A2 PLUMBING SCHEMATIC

8/13/2011 8:47:04 AM

GENERAL SHEET NOTES

REFERENCE KEYNOTES

SHEET KEYNOTES

FIRST LIGHT NZ

TEAM NAME:	FIRSTLIGHT NZ
ADDRESS:	139 VIVIAN STREET TE ARO, WELLINGTON NEWZEALAND
CONTACT:	INFO@FIRSTLIGHTHOUSE.AC.NZ WWW.FIRSTLIGHTHOUSE.AC.NZ

CONSULTANTS

TENNENT + BROWN ARCHITECTS
DUNNING THORNTON CONSULTANTS LTD
LEAP AUSTRALASIA LTD
SOUTHERN PERSPECTIVES / SOLAR CITY

CLIENT

U.S. DEPARTMENT OF ENERGY
SOLAR DECATHLON 2011
WWW.SOLARDECATHLON.GOV

U.S. DEPARTMENT OF ENERGY SOLAR DECATHLON

MARK	DATE	DESCRIPTION
CN	11-01-11	FOR CONSTRUCTION

LOT NUMBER:	LOT NUMBER
DRAWN BY:	AUTHOR
CHECKED BY:	CHECKER
COPYRIGHT:	VICTORIA UNIVERSITY

SHEET TITLE

PLUMBING SCHEMATIC

P-100

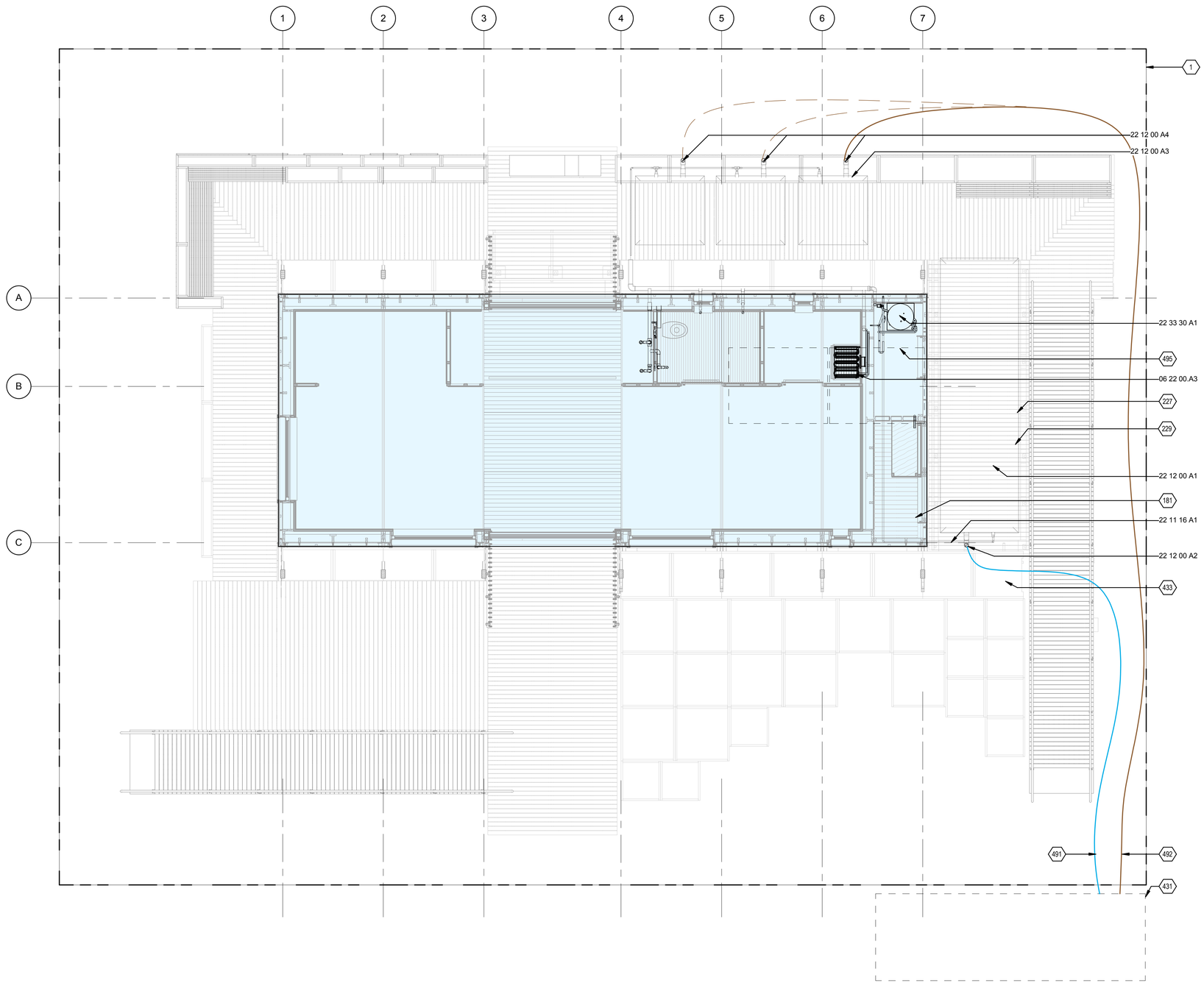

A1 PLUMBING SITE PLAN

1 : 48

0 2' 4' 8'

GENERAL SHEET NOTES

REFERENCE KEYNOTES

06 22 00.A3	HYDRONIC DRYING CUPBOARD
22 11 16 A1	25MM POLYBUTYLENE MAIN WATER SUPPLY LINE
22 12 00 A1	3295 LITRES / 870 GALLONS POTABLE WATER SUPPLY LOCATED UNDERNEATH DECKING. TANK TO BE 'WET EARTH' BLADDER TANK - 6100 X 1800 X 300MM
22 12 00 A2	WATER BLADDER FILL POINT
22 12 00 A3	768 LITRE / 203 GALLON WASTE WATER STORAGE TANKS LOCATED UNDERNEATH DECKING. TANKS TO BE 'WET EARTH' BLADDER TANKS. 1600 X 1600 X 300MM
22 12 00 A4	WASTE WATER REMOVAL POINTS
22 33 30 A1	360 LITRE INSULATED STAINLESS STEEL HOT WATER CYLINDER WITH OVERFLOW TRAY

SHEET KEYNOTES

1	SITE BOUNDARY
181	FINISHED AREA: 71.9 SQUARE METERS / 774 SQUARE FEET SHOWN SHADED. FINISHED SQUARE FOOTAGE CALCULATIONS FOR THIS HOUSE WERE MADE BASED ON PLAN DIMENSIONS ONLY AND MAY VARY FROM THE FINISHED SQUARE FOOTAGE OF THE HOUSE AS BUILT.
227	WATER STORAGE BLADDERS MOUNTED 3.5 INCHES ABOVE GROUND LEVEL
229	FRESH AND GREY WATER STORAGE TANKS LOCATED OUTSIDE BUILDING FINISHED SQUARE FOOTAGE AS INDICATED
431	WATER DELIVERY/REMOVAL TRUCK PARKING POSITION.
433	INNER PLANTER TO BE REMOVED DURING WATER BLADDER FILLING PROCESS TO PROVIDE MINIMUM 305MM / 12" CLEARANCE TO INLET
491	COURSE OF FRESH WATER SUPPLY HOSE. HOSE TO RUN OVER DECK AND THROUGH SPACE VACATED BY PLANTER
492	COURSE OF WASTE WATER REMOVAL HOSE
495	LINE OF EVACUATED TUBE SOLAR HOT WATER COLLECTORS ON ROOF ABOVE

FIRST LIGHT NZ

TEAM NAME:	FIRSTLIGHT NZ
ADDRESS:	139 VIVIAN STREET TE ARO, WELLINGTON NEWZEALAND
CONTACT:	INFO@FIRSTLIGHTHOUSE.AC.NZ WWW.FIRSTLIGHTHOUSE.AC.NZ

CONSULTANTS

TENNENT + BROWN ARCHITECTS

DUNNING THORNTON CONSULTANTS LTD

LEAP AUSTRALASIA LTD

SOUTHERN PERSPECTIVES / SOLAR CITY

CLIENT

U.S. DEPARTMENT OF ENERGY

SOLAR DECATHLON 2011

WWW.SOLARDECATHLON.GOV

U.S. DEPARTMENT OF ENERGY SOLAR DECATHLON

MARK	DATE	DESCRIPTION
CN	11-01-11	FOR CONSTRUCTION

LOT NUMBER:	LOT NUMBER
DRAWN BY:	AUTHOR
CHECKED BY:	CHECKER
COPYRIGHT:	VICTORIA UNIVERSITY

SHEET TITLE

PLUMBING & GREYWATER SITE PLAN

P-101

8/13/2011 8:47:17 AM

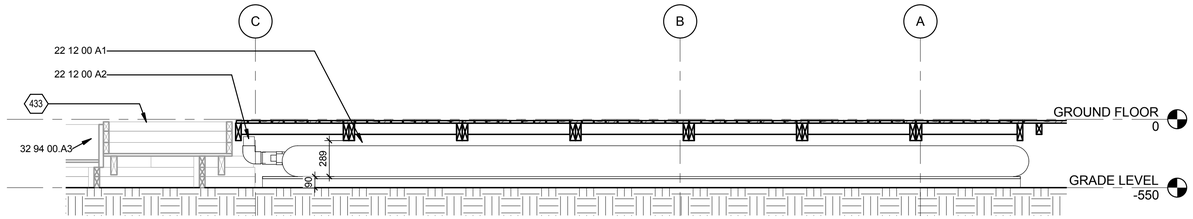

D1 WATER SUPPLY BLADDER SECTION

1 : 24

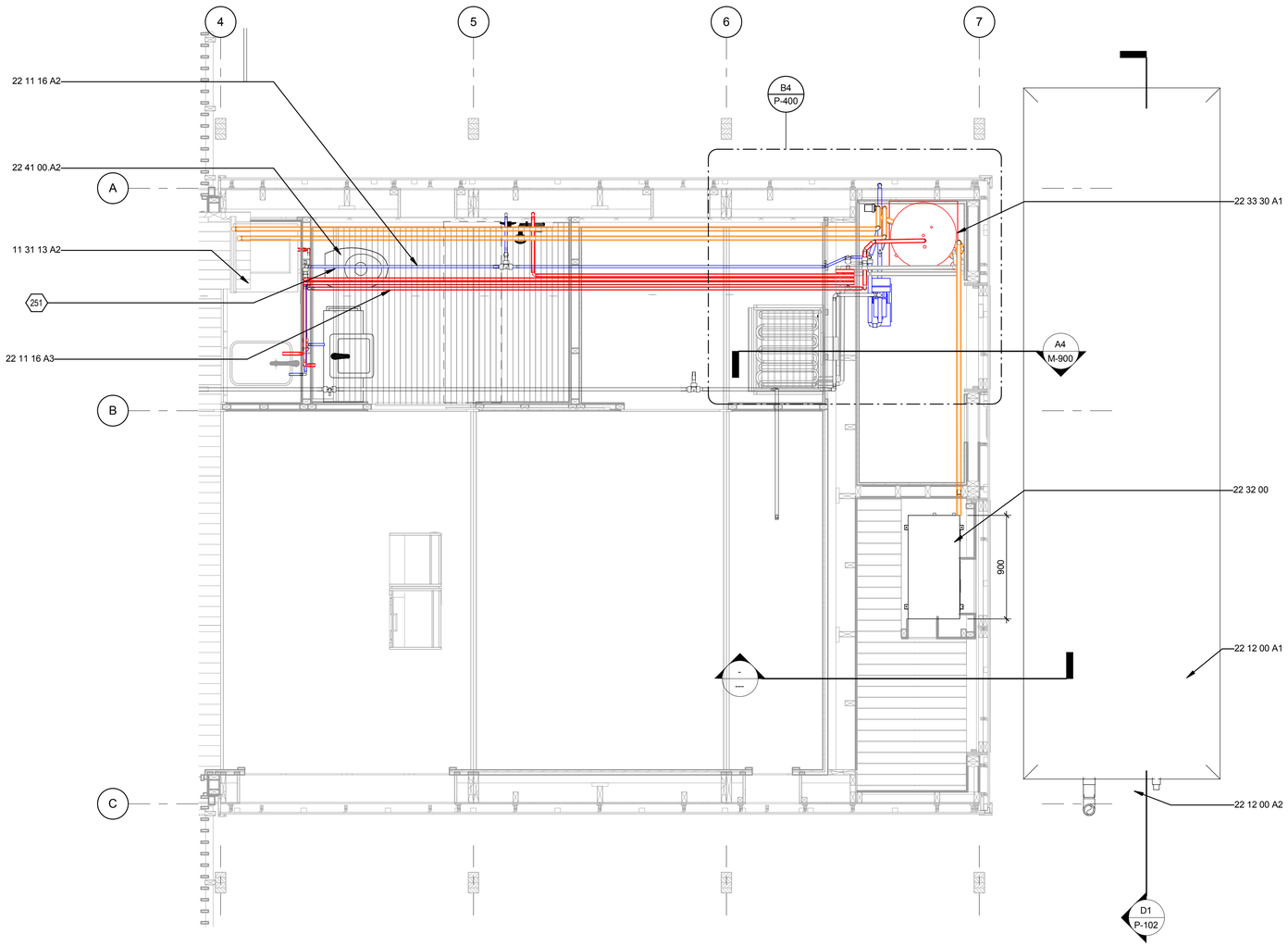

A1 SUPPLY WATER PLAN

1 : 24

GENERAL SHEET NOTES

1.
LANDSCAPE AND PLANTING ELEMENTS NOT SHOWN IN THIS VIEW FOR CLARITY - REFER P-101 FOR PLUMBING SITE PLAN

REFERENCE KEYNOTES

11 31 13 A2	FISHER & PAYKEL 6 PLACE SINGLE DISHDRAWER MODEL DD60SCX6
22 11 16 A1	25MM POLYBUTYLENE MAIN WATER SUPPLY LINE
22 11 16 A2	15MM POLYBUTYLENE COLD WATER DISTRIBUTION LINE
22 11 16 A3	15MM POLYBUTYLENE HOT WATER DISTRIBUTION LINE
22 12 00 A1	3295 LITRES / 870 GALLONS POTABLE WATER SUPPLY LOCATED UNDERNEATH DECKING. TANK TO BE 'WET EARTH' BLADDER TANK - 6100 X 1800 X 300MM
22 12 00 A2	WATER BLADDER FILL POINT
22 32 00	RESIDENTIAL DOMESTIC AIR-TO-WATER HEAT PUMP WATER HEATER
22 33 30 A1	360 LITRE INSULATED STAINLESS STEEL HOT WATER CYLINDER WITH OVERFLOW TRAY
22 41 00.A2	IMEX CB-1088 ARCO BACK-TO-WALL TOILET PAN WITH FULLY FRAMED 'WATERMARK' DUAL FLUSH IN-WALL CISTERN. REFER MANUFACTURERS SPECIFICATIONS FOR INSTALLATION DETAILS
32 94 00.A3	COASTAL PLANTER TYPE 3 - 864L X 864W X 344H MM

SHEET KEYNOTES

251	SEPERATE FRESH WATER LINE TO TOILET SO HOUSE CAN BE RETROFITTED WITH GREY WATER SYSTEM
433	INNER PLANTER TO BE REMOVED DURING WATER BLADDER FILLING PROCESS TO PROVIDE MINIMUM 305MM / 12" CLEARANCE TO INLET

FIRST LIGHT NZ

TEAM NAME:	FIRSTLIGHT NZ
ADDRESS:	139 VIVIAN STREET TE ARO, WELLINGTON NEWZEALAND
CONTACT:	INFO@FIRSTLIGHTHOUSE.AC.NZ WWW.FIRSTLIGHTHOUSE.AC.NZ

CONSULTANTS

TENNENT + BROWN ARCHITECTS

DUNNING THORNTON CONSULTANTS LTD

LEAP AUSTRALASIA LTD

SOUTHERN PERSPECTIVES / SOLAR CITY

CLIENT

U.S. DEPARTMENT OF ENERGY

SOLAR DECATHLON 2011

WWW.SOLARDECATHLON.GOV

U.S. DEPARTMENT OF ENERGY SOLAR DECATHLON

MARK	DATE	DESCRIPTION
CN	11-01-11	CN FOR2-02-2011UCTIONFOR CONSTRUCT

LOT NUMBER:	LOT NUMBER
DRAWN BY:	AUTHOR
CHECKED BY:	CHECKER
COPYRIGHT:	VICTORIA UNIVERSITY

SHEET TITLE

PLUMBING SUPPLY PLAN

P-102

8/13/2011 8:47:30 AM

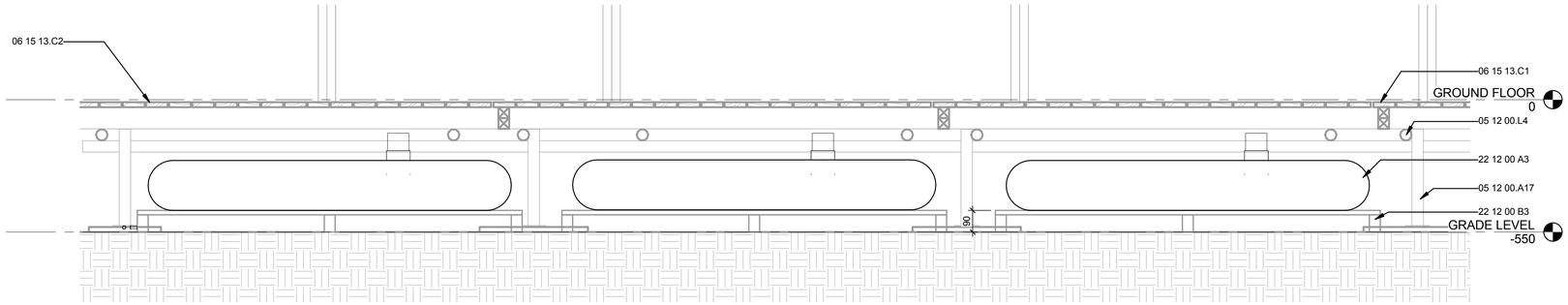

1 SECTION THROUGH GREY WATER TANKS

1 : 12

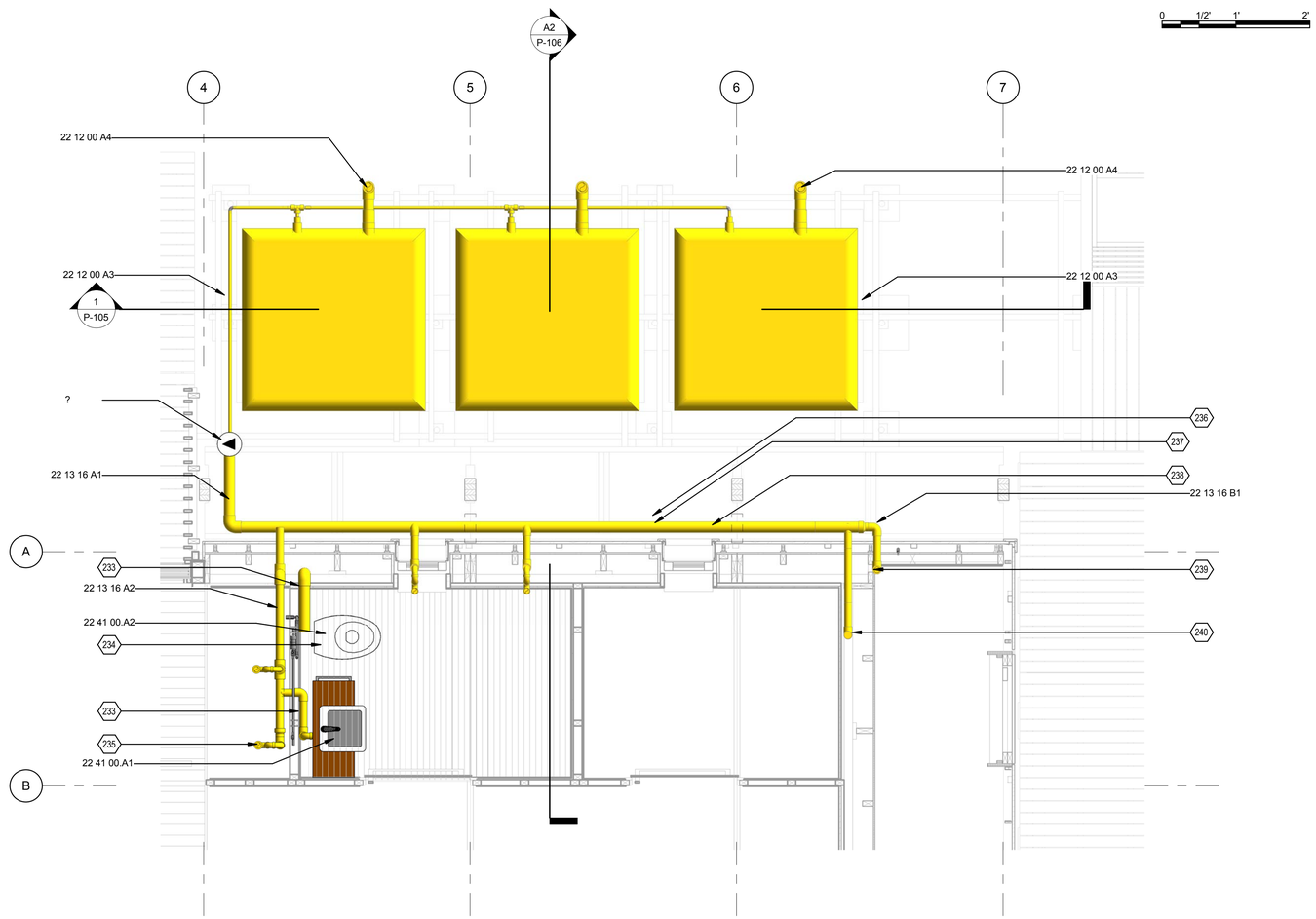

A2 WASTE WATER PLAN

1 : 24

GENERAL SHEET NOTES

1.
LANDSCAPE AND PLANTING ELEMENTS NOT SHOWN IN THIS VIEW FOR CLARITY - REFER P-101 FOR PLUMBING SITE PLAN

REFERENCE KEYNOTES

05 12 00.A17	450X450MM STEEL DECK SCAFFOLD FOOTING
05 12 00.L4	48MM STANDARD SCAFFOLD POLE
06 15 13.C1	
06 15 13.C2	
22 12 00 A3	768 LITRE / 203 GALLON WASTE WATER STORAGE TANKS LOCATED UNDERNEATH DECKING. TANKS TO BE 'WET EARTH' BLADDER TANKS. 1600 X 1600 X 300MM
22 12 00 A4	WASTE WATER REMOVAL POINTS
22 12 00 B3	TIMBER SUPPORT STRUCTURE FOR GREY WATER TANKS. 75 X 90MM BEARERS WITH 18MM PLY OVER. BEARING PRESSURE 50 KPA FOR CENTRAL BEARER, 20 KPA FOR OUTER BEARERS
22 13 16 A1	80MM PVC WASTE PIPE
22 13 16 A2	65MM PVC WASTE PIPE
22 13 16 B1	65MM PVC VENT PIPE
22 41 00.A1	380 X 380 X 130MM TRENZ SEMI RECESSED BASIN. MODEL 4148-C
22 41 00.A2	IMEX CB-1088 ARCO BACK-TO-WALL TOILET PAN WITH FULLY FRAMED 'WATERMARK' DUAL FLUSH IN-WALL CISTERN. REFER MANUFACTURERS SPECIFICATIONS FOR INSTALLATION DETAILS

SHEET KEYNOTES

233	65MM DRAIN @ 1:40 FALL
234	WC NOT CONNECTED TO MAIN DRAIN AND CAPPED FOR PURPOSES OF THE COMPETITION
235	40MM 1:40 WASTE WATERPIPE FROM KITCHEN SINK VIA TRAP
236	80MM DRAIN @ 1:60
237	PIPE TO RUN ALONG EDGE OF BUILDING BUT BELOW DECK SO EASY ACCESS TO JOIN BETWEEN MODULES ON SITE BUT CANNOT BE SEEN ONCE THE DECK IS IN PLACE
238	PIPE JOINED WITH SCREW FIT CONNECTIONS BETWEEN MODULE JOINS
239	50MM VENT PIPE
240	40MM 1:40 TRAPPED TUNDISH TO ACCPET WASHING MACHINE OUTLET

FIRST LIGHT NZ

TEAM NAME:	FIRSTLIGHT NZ
ADDRESS:	139 VIVIAN STREET TE ARO, WELLINGTON NEWZEALAND
CONTACT:	INFO@FIRSTLIGHTHOUSE.AC.NZ WWW.FIRSTLIGHTHOUSE.AC.NZ

CONSULTANTS

TENNENT + BROWN ARCHITECTS

DUNNING THORNTON CONSULTANTS LTD

LEAP AUSTRALASIA LTD

SOUTHERN PERSPECTIVES / SOLAR CITY

CLIENT

U.S. DEPARTMENT OF ENERGY

SOLAR DECATHLON 2011

WWW.SOLARDECATHLON.GOV

U.S. DEPARTMENT OF ENERGY SOLAR DECATHLON

MARK	DATE	DESCRIPTION
CN	11-01-11	FOR CONSTRUCTION

LOT NUMBER:	LOT NUMBER
DRAWN BY:	AUTHOR
CHECKED BY:	CHECKER
COPYRIGHT:	VICTORIA UNIVERSITY

SHEET TITLE

PLUMBING - WASTE WATER

P-105

8/13/2011 8:47:44 AM

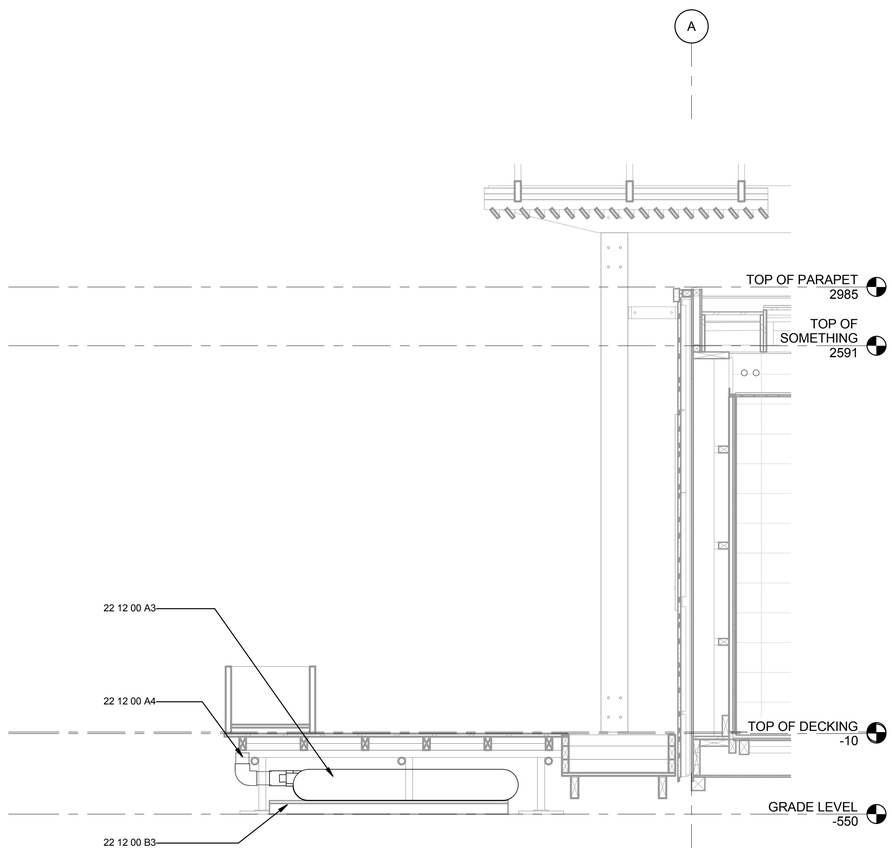

A2 WASTE WATER REMOVAL POINTS
1 : 20

8/13/2011 8:47:47 AM

FIRST LIGHT NZ

TEAM NAME:	FIRST LIGHT
ADDRESS:	139 VIVIAN STREET TE ARO, WELLINGTON NEWZEALAND
CONTACT:	ELINUTTALL@GMAIL.COM WWW.FIRSTLIGHTHOUSE.AC.NZ

CONSULTANTS

TENNENT + BROWN ARCHITECTS
DUNNING THORNTON CONSULTANTS LTD
LEAP AUSTRALASIA LTD
SOUTHERN PERSPECTIVES / SOLAR CITY

CLIENT

U.S. DEPARTMENT OF ENERGY
SOLAR DECATHLON 2011
WWW.SOLARDECATHLON.GOV

U.S. DEPARTMENT OF ENERGY SOLAR DECATHLON

MARK	DATE	DESCRIPTION
CN	11-01-11	FOR CONSTRUCTION

LOT NUMBER:	LOT NUMBER
DRAWN BY:	Author
CHECKED BY:	Checker
COPYRIGHT:	

SHEET TITLE

WASTE WATER SECTION

P-106

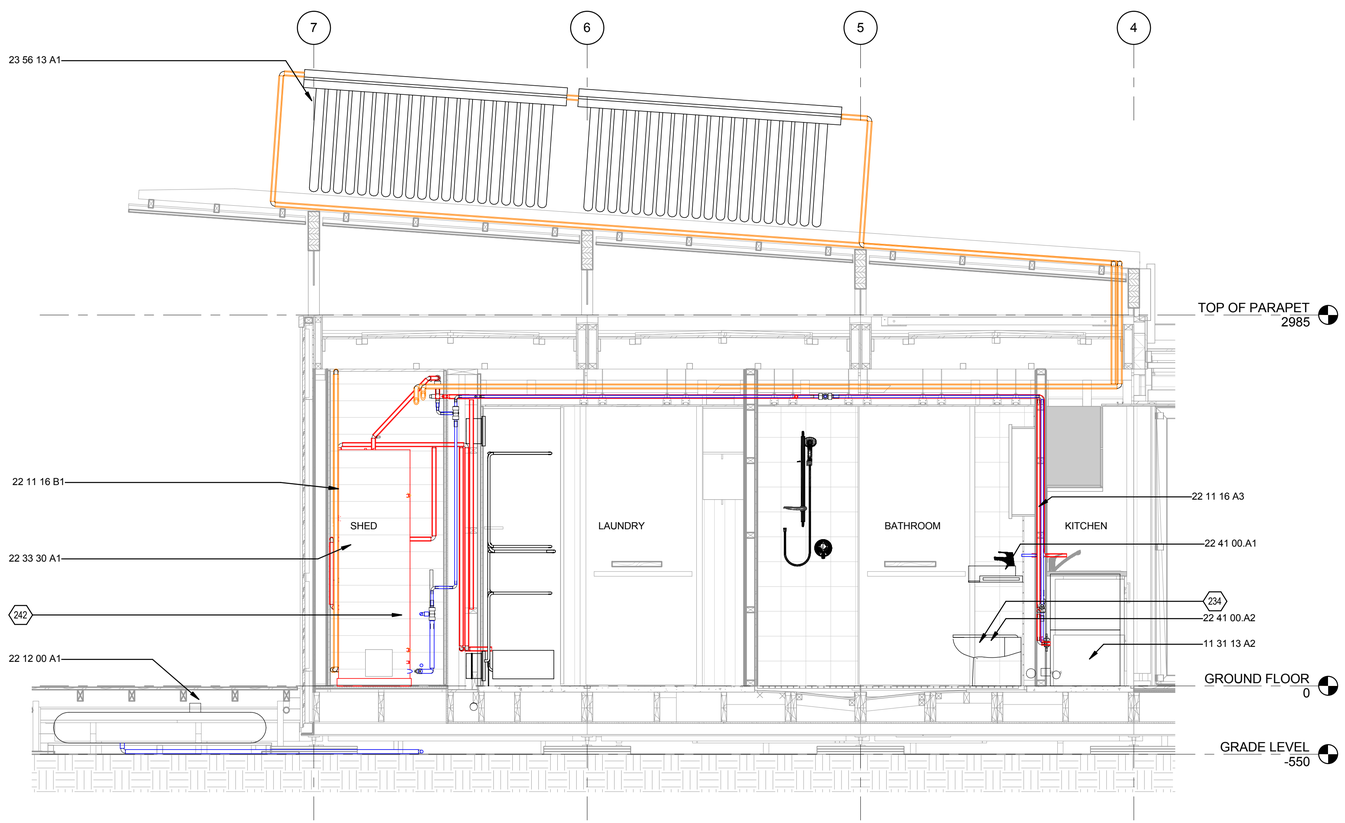

A2 SUPPLY WATER SECTION
1 : 24

0 1' 2' 4'

GENERAL SHEET NOTES

REFERENCE KEYNOTES

11 31 13 A2	FISHER & PAYKEL 6 PLACE SINGLE DISHDRAWER MODEL DD60SCX6
22 11 16 A3	15MM POLYBUTYLENE HOT WATER DISTRIBUTION LINE
22 11 16 B1	15MM COPPER SOLAR FLUID CIRCULATION LINE
22 12 00 A1	3295 LITRES / 870 GALLONS POTABLE WATER SUPPLY LOCATED UNDERNEATH DECKING. TANK TO BE 'WET EARTH' BLADDER TANK - 6100 X 1800 X 300MM
22 33 30 A1	360 LITRE INSULATED STAINLESS STEEL HOT WATER CYLINDER WITH OVERFLOW TRAY
22 41 00.A1	380 X 380 X 130MM TRENZ SEMI RECESSED BASIN. MODEL 4148-C
22 41 00.A2	IMEX CB-1088 ARCO BACK-TO-WALL TOILET PAN WITH FULLY FRAMED 'WATERMARK' DUAL FLUSH IN-WALL CISTERN. REFER MANUFACTURERS SPECIFICATIONS FOR INSTALLATION DETAILS
23 56 13 A1	20 TUBE EVACUATED TUBE SOLAR HOT WATER COLLECTORS

SHEET KEYNOTES

234	WC NOT CONNECTED TO MAIN DRAIN AND CAPPED FOR PURPOSES OF THE COMPETITION
242	SEPERATE FRESH WATER LINE TO TOILET SO HOUSE CAN BE RETROFITTED WITH GREY WATER SYSTEM

FIRST LIGHT NZ

TEAM NAME:	FIRSTLIGHT NZ
ADDRESS:	139 VIVIAN STREET TE ARO, WELLINGTON NEWZEALAND
CONTACT:	INFO@FIRSTLIGHTHOUSE.AC.NZ WWW.FIRSTLIGHTHOUSE.AC.NZ

CONSULTANTS

TENNENT + BROWN ARCHITECTS
DUNNING THORNTON CONSULTANTS LTD
LEAP AUSTRALASIA LTD
SOUTHERN PERSPECTIVES / SOLAR CITY

CLIENT

U.S. DEPARTMENT OF ENERGY
SOLAR DECATHLON 2011
WWW.SOLARDECATHLON.GOV

U.S. DEPARTMENT OF ENERGY SOLAR DECATHLON

MARK	DATE	DESCRIPTION
CN	11-01-11	FOR CONSTRUCTION

LOT NUMBER:	LOT NUMBER
DRAWN BY:	AUTHOR
CHECKED BY:	CHECKER
COPYRIGHT:	VICTORIA UNIVERSITY

SHEET TITLE

PLUMBING SUPPLY SECTION

P-300

8/13/2011 8:47:58 AM

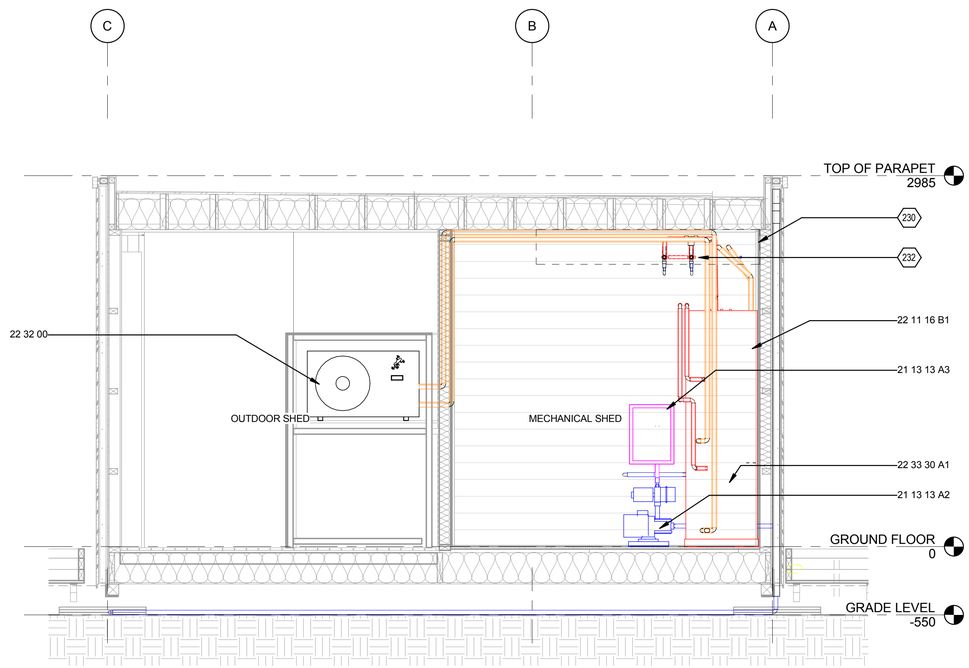

A3 SUPPLY WATER SERVICES SHED ELEVATION
1 : 24

0 1' 2' 4'

GENERAL SHEET NOTES

1.
MECHANICAL SERVICES NOT SHOWN IN THIS VIEW FOR CLARITY

REFERENCE KEYNOTES

21 13 13 A2	EQ DHF 460 FIRE SUPPRESSION PRESSURE PUMP
21 13 13 A3	BLAZESTOP SPRINKLER CONTROL BOX
22 11 16 B1	15MM COPPER SOLAR FLUID CIRCULATION LINE
22 32 00	RESIDENTIAL DOMESTIC AIR-TO-WATER HEAT PUMP WATER HEATER
22 33 30 A1	360 LITRE INSULATED STAINLESS STEEL HOT WATER CYLINDER WITH OVERFLOW TRAY

SHEET KEYNOTES

230	SERVICES BULKHEAD
232	EACH HOT WATER LINE FROM MANIFOLD IS DIRECTLY FED TO EACH HOT WATER OUTLET

FIRST LIGHT NZ

TEAM NAME:	FIRSTLIGHT NZ
ADDRESS:	139 VIVIAN STREET TE ARO, WELLINGTON NEWZEALAND
CONTACT:	INFO@FIRSTLIGHTHOUSE.AC.NZ WWW.FIRSTLIGHTHOUSE.AC.NZ

CONSULTANTS

TENNENT + BROWN ARCHITECTS
DUNNING THORNTON CONSULTANTS LTD
LEAP AUSTRALASIA LTD
SOUTHERN PERSPECTIVES / SOLAR CITY

CLIENT

U.S. DEPARTMENT OF ENERGY
SOLAR DECATHLON 2011
WWW.SOLARDECATHLON.GOV

U.S. DEPARTMENT OF ENERGY SOLAR DECATHLON

MARK	DATE	DESCRIPTION
CN	11-01-11	FOR CONSTRUCTION

LOT NUMBER:	LOT NUMBER
DRAWN BY:	Author
CHECKED BY:	Checker
COPYRIGHT:	VICTORIA UNIVERSITY

SHEET TITLE

PLUMBING SUPPLY SECTION - SHED

P-301

8/13/2011 8:48:07 AM

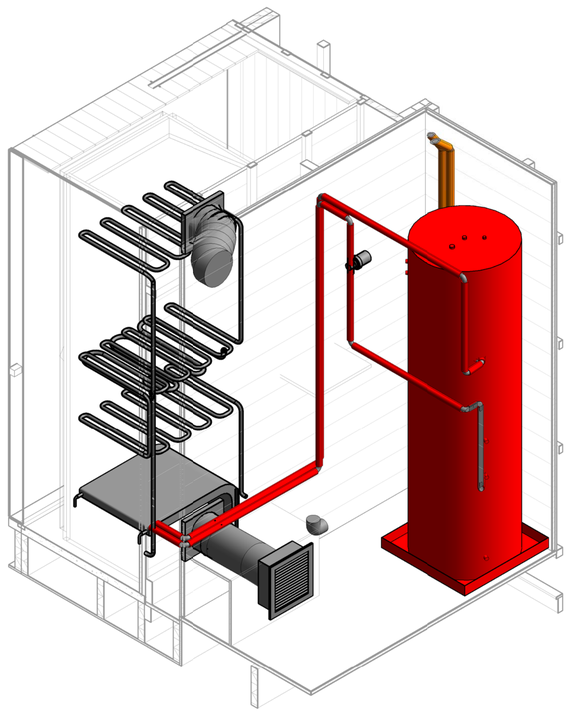

B1 HYDRONIC DRYING ROOM

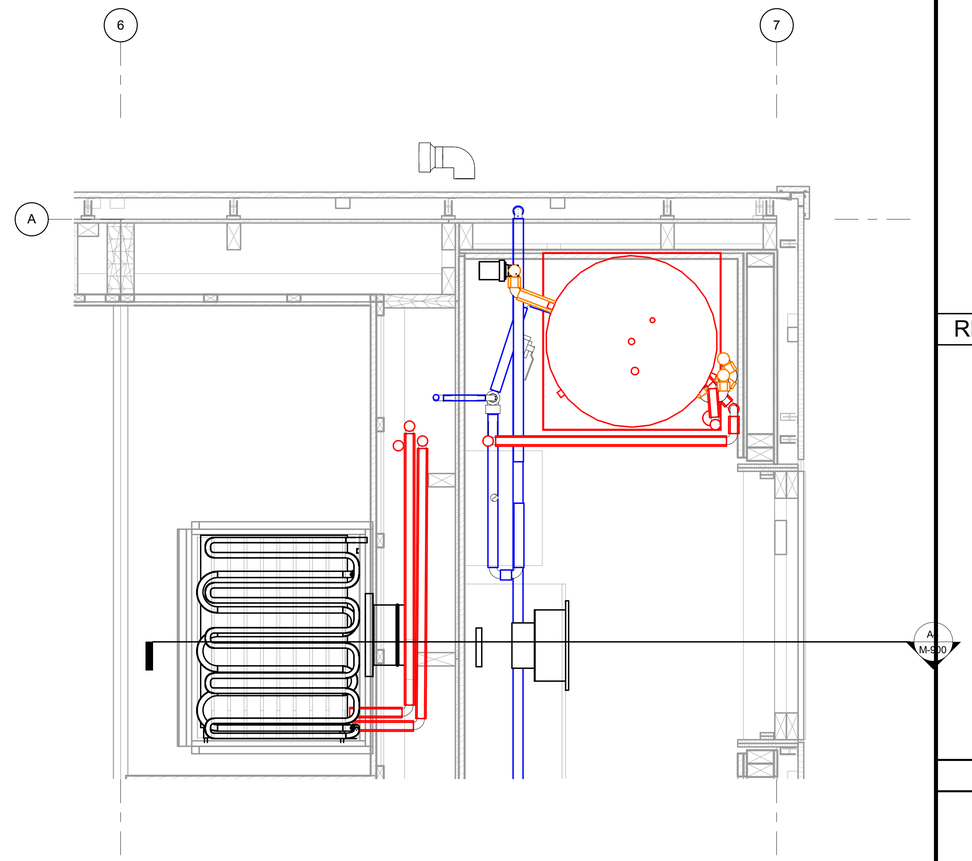

B4 DRYING ROOM PLAN
1 : 10

GENERAL SHEET NOTES

REFERENCE KEYNOTES

SHEET KEYNOTES

FIRST LIGHT NZ

TEAM NAME:	FIRST LIGHT
ADDRESS:	139 VIVIAN STREET TE ARO, WELLINGTON NEWZEALAND
CONTACT:	ELINUTTALL@GMAIL.COM WWW.FIRSTLIGHTHOUSE.AC.NZ

CONSULTANTS

TENNENT + BROWN ARCHITECTS
DUNNING THORNTON CONSULTANTS LTD
LEAP AUSTRALASIA LTD
SOUTHERN PERSPECTIVES / SOLAR CITY

CLIENT

U.S. DEPARTMENT OF ENERGY
SOLAR DECATHLON 2011
WWW.SOLARDECATHLON.GOV

U.S. DEPARTMENT OF ENERGY SOLAR DECATHLON

MARK	DATE	DESCRIPTION
CN	11-01-11	FOR CONSTRUCTION

LOT NUMBER:	LOT NUMBER
DRAWN BY:	Author
CHECKED BY:	Checker

COPYRIGHT:

SHEET TITLE

HYDRONIC DRYING ROOM

P-400

8/13/2011 8:48:15 AM

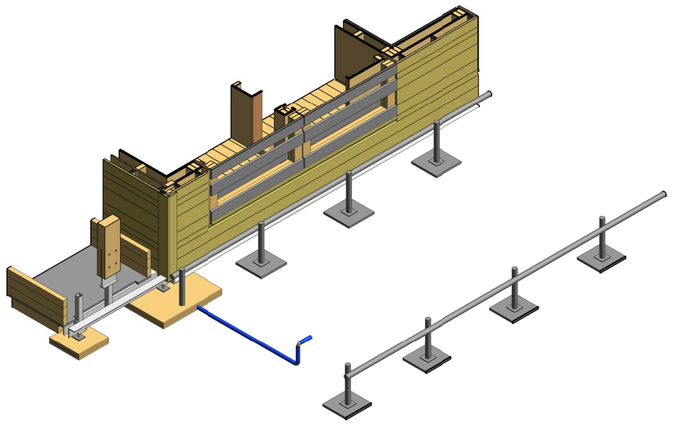

D1 STEP 1 - LAY SCAFFOLD

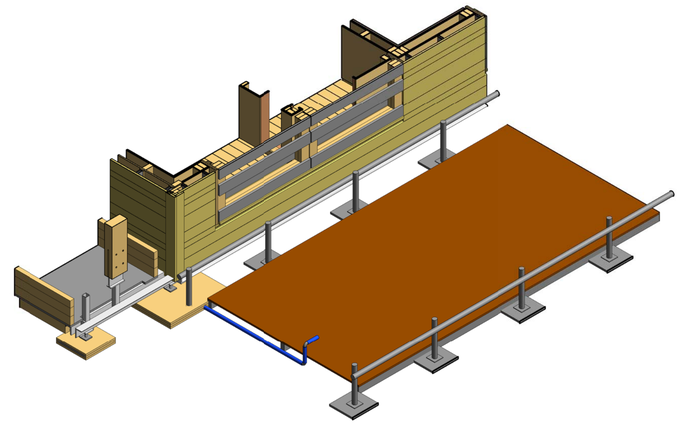

D2 STEP 2 - PLYWOOD BASE

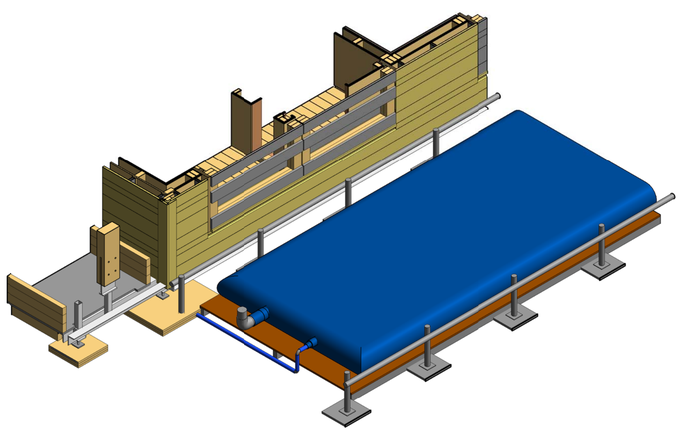

A1 STEP 3 - LAY BLADDER & FILL

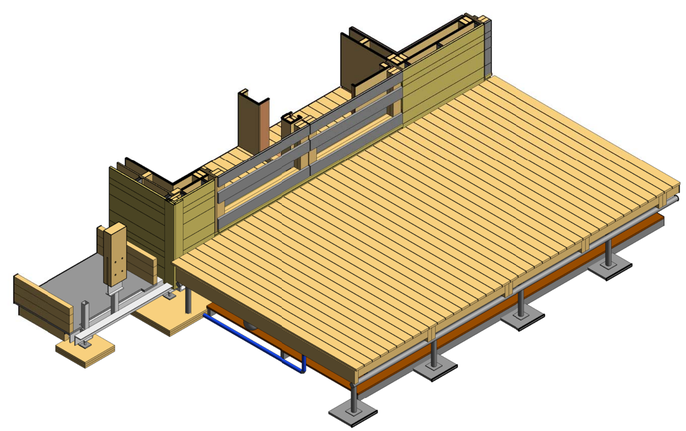

A4 STEP 4 - LAY DECKING

GENERAL SHEET NOTES

1.
LANDSCAPE AND CANOPY ELEMENTS NOT SHOWN IN THIS VIEW FOR CLARITY

REFERENCE KEYNOTES

SHEET KEYNOTES

FIRST LIGHT NZ

TEAM NAME:	FIRSTLIGHT NZ
ADDRESS:	139 VIVIAN STREET TE ARO, WELLINGTON NEWZEALAND
CONTACT:	INFO@FIRSTLIGHTHOUSE.AC.NZ WWW.FIRSTLIGHTHOUSE.AC.NZ

CONSULTANTS

TENNENT + BROWN ARCHITECTS
DUNNING THORNTON CONSULTANTS LTD
LEAP AUSTRALASIA LTD
SOUTHERN PERSPECTIVES / SOLAR CITY

CLIENT

U.S. DEPARTMENT OF ENERGY
SOLAR DECATHLON 2011
WWW.SOLARDECATHLON.GOV

U.S. DEPARTMENT OF ENERGY SOLAR DECATHLON

MARK	DATE	DESCRIPTION
CN	11-01-11	FOR CONSTRUCTION

LOT NUMBER:	LOT NUMBER
DRAWN BY:	AUTHOR
CHECKED BY:	CHECKER
COPYRIGHT:	VICTORIA UNIVERSITY

SHEET TITLE

WATER DELIVERY SCHEMATIC

P-901

8/13/2011 8:46:28 AM

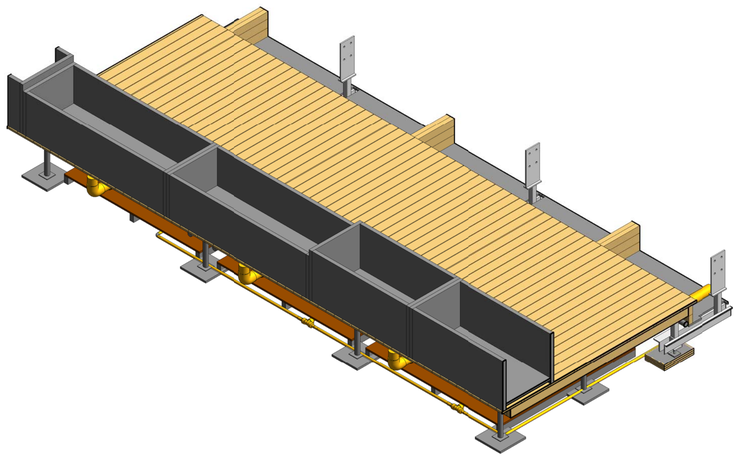

D1 STEP 1 - REMOVE PLANTERS AND DECKING

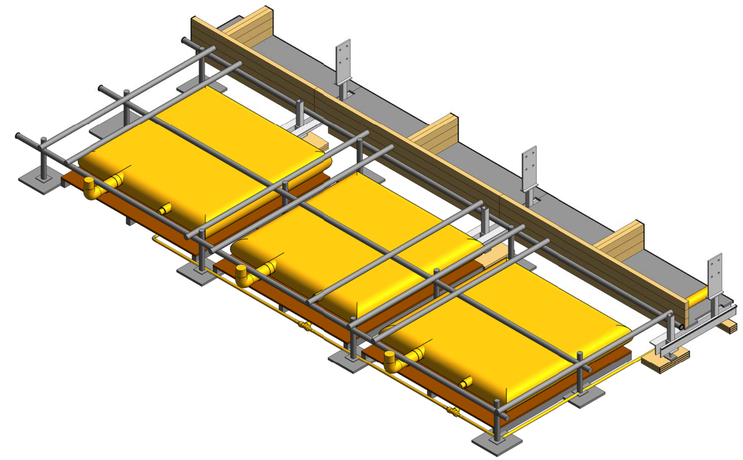

D4 STEP 2 - REMOVE WATER FROM BLADDERS

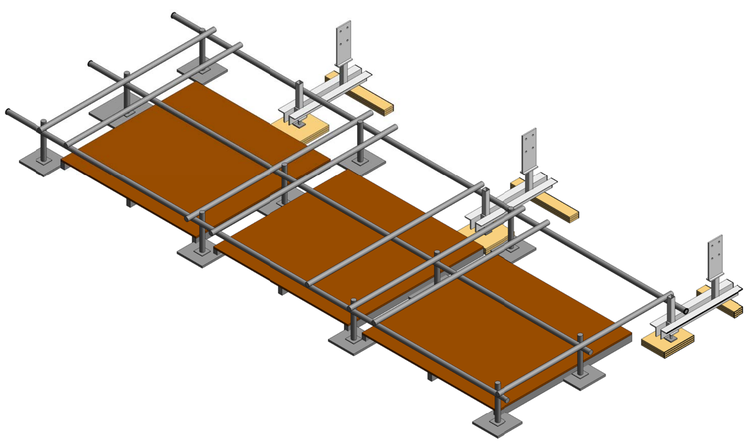

A1 STEP 3 - REMOVE BLADDERS

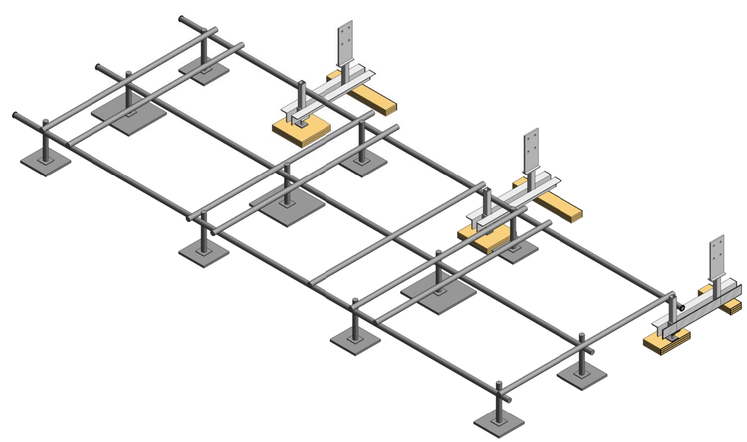

A4 STEP 4 - REMOVE PLYWOOD BASE

GENERAL SHEET NOTES

REFERENCE KEYNOTES

SHEET KEYNOTES

FIRST LIGHT NZ

TEAM NAME:	FIRSTLIGHT NZ
ADDRESS:	139 VIVIAN STREET TE ARO, WELLINGTON NEWZEALAND
CONTACT:	INFO@FIRSTLIGHTHOUSE.AC.NZ WWW.FIRSTLIGHTHOUSE.AC.NZ

CONSULTANTS

TENNENT + BROWN ARCHITECTS
DUNNING THORNTON CONSULTANTS LTD
LEAP AUSTRALASIA LTD
SOUTHERN PERSPECTIVES / SOLAR CITY

CLIENT

U.S. DEPARTMENT OF ENERGY
SOLAR DECATHLON 2011
WWW.SOLARDECATHLON.GOV

U.S. DEPARTMENT OF ENERGY SOLAR DECATHLON

MARK	DATE	DESCRIPTION
CN	11-01-11	FOR CONSTRUCTION

LOT NUMBER:	LOT NUMBER
DRAWN BY:	AUTHOR
CHECKED BY:	CHECKER
COPYRIGHT:	VICTORIA UNIVERSITY

SHEET TITLE

WASTE WATER REMOVAL SCHEMATIC

P-902

8/13/2011 8:48:40 AM

A1 WASTE WATER ISOMETRIC

8/13/2011 8:48:55 AM

FIRST LIGHT NZ

TEAM NAME:	FIRST LIGHT
ADDRESS:	139 VIVIAN STREET TE ARO, WELLINGTON NEWZEALAND
CONTACT:	ELINUTTALL@GMAIL.COM WWW.FIRSTLIGHTHOUSE.AC.NZ

CONSULTANTS

TENNENT + BROWN ARCHITECTS
DUNNING THORNTON CONSULTANTS LTD
LEAP AUSTRALASIA LTD
SOUTHERN PERSPECTIVES / SOLAR CITY

CLIENT

U.S. DEPARTMENT OF ENERGY
SOLAR DECATHLON 2011
WWW.SOLARDECATHLON.GOV

U.S. DEPARTMENT OF ENERGY SOLAR DECATHLON

MARK	DATE	DESCRIPTION
CN	11-01-11	FOR CONSTRUCTION

LOT NUMBER:	LOT NUMBER
DRAWN BY:	Author
CHECKED BY:	Checker
COPYRIGHT:	

SHEET TITLE

WASTE WATER ISOMETRIC

P-903

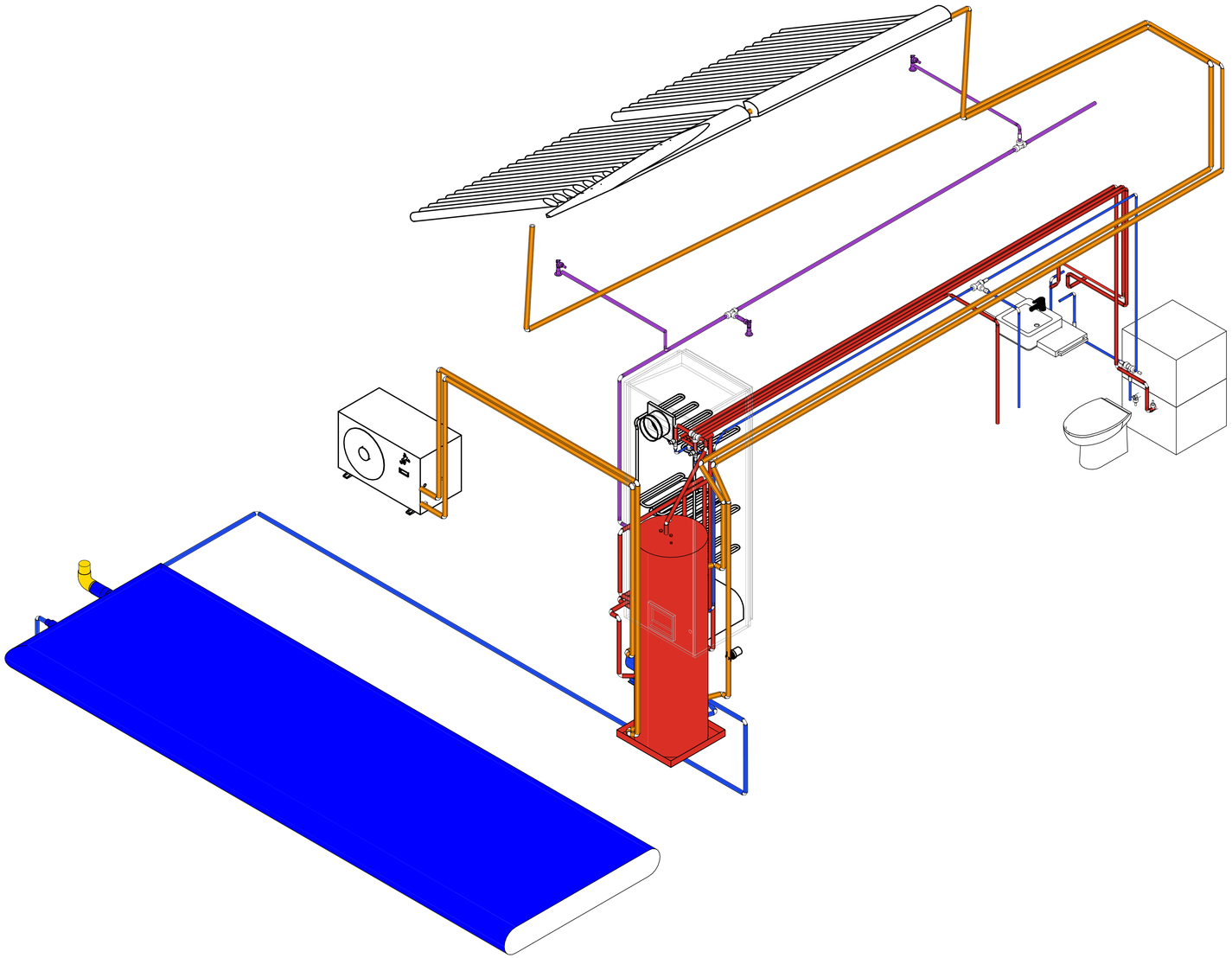

A1 3D SUPPLY ISOMETRIC

8/13/2011 8:49:05 AM

FIRST LIGHT NZ

TEAM NAME:	FIRST LIGHT
ADDRESS:	139 VIVIAN STREET TE ARO, WELLINGTON NEWZEALAND
CONTACT:	ELINUTTALL@GMAIL.COM WWW.FIRSTLIGHTHOUSE.AC.NZ

CONSULTANTS

TENNENT + BROWN ARCHITECTS
DUNNING THORNTON CONSULTANTS LTD
LEAP AUSTRALASIA LTD
SOUTHERN PERSPECTIVES / SOLAR CITY

CLIENT

U.S. DEPARTMENT OF ENERGY
SOLAR DECATHLON 2011
WWW.SOLARDECATHLON.GOV

U.S. DEPARTMENT OF ENERGY SOLAR DECATHLON

MARK	DATE	DESCRIPTION
CN	11-01-11	FOR CONSTRUCTION

LOT NUMBER:	LOT NUMBER
DRAWN BY:	Author
CHECKED BY:	Checker
COPYRIGHT:	

SHEET TITLE

FRESH WATER ISOMETRIC

P-904

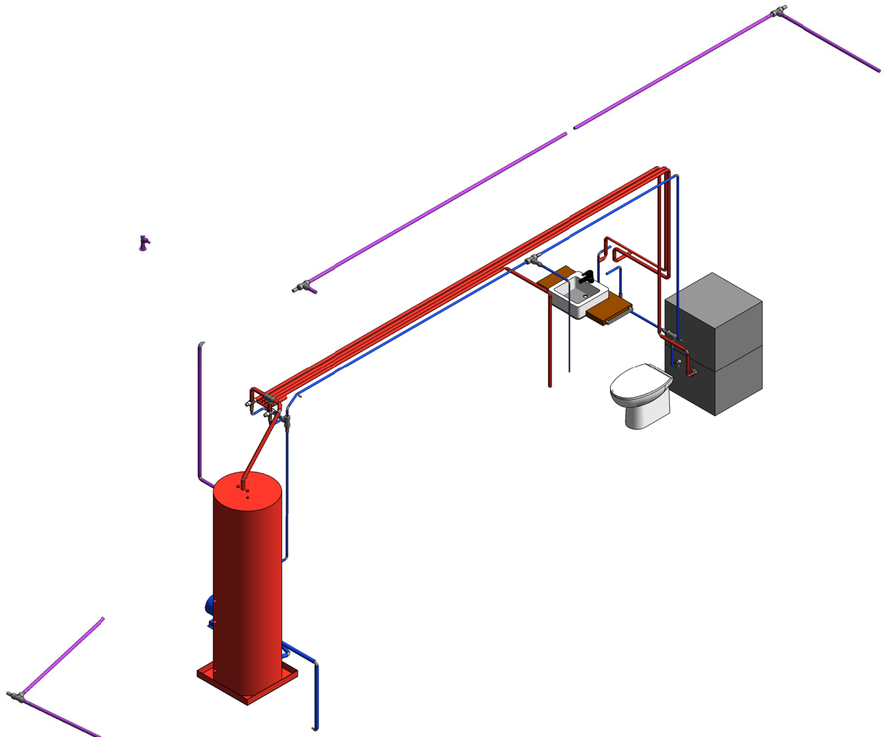

C1 3D HOT WATER

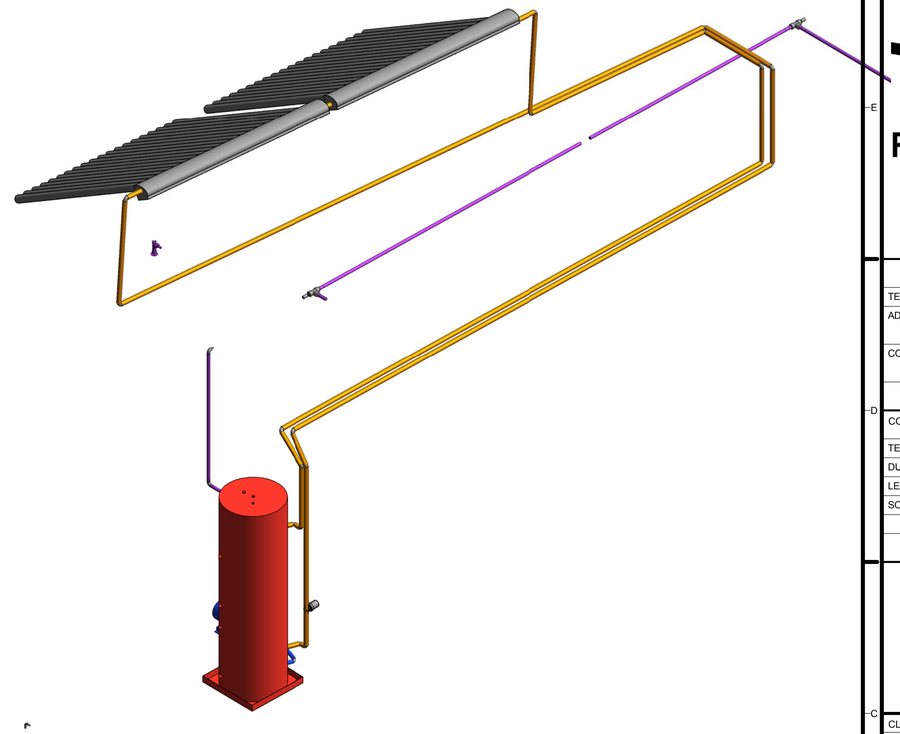

C5 3D SOLAR CIRCUIT

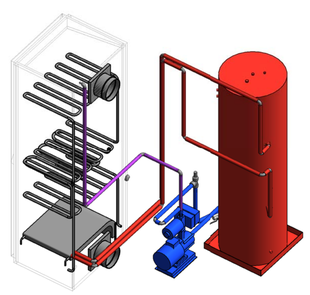

A1 3D DRYER CIRCUIT

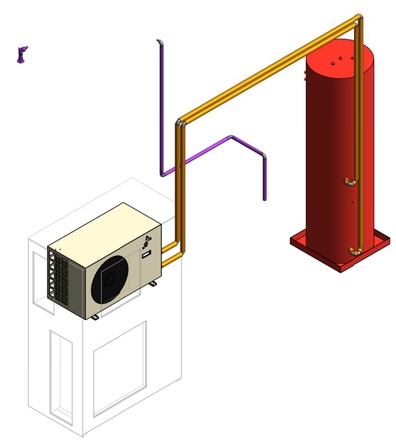

A5 3D HEAT PUMP

8/13/2011 8:49:17 AM

FIRST LIGHT NZ

TEAM NAME:	FIRST LIGHT
ADDRESS:	139 VIVIAN STREET TE ARO, WELLINGTON NEWZEALAND
CONTACT:	ELINUTTALL@GMAIL.COM WWW.FIRSTLIGHTHOUSE.AC.NZ

CONSULTANTS

TENNENT + BROWN ARCHITECTS
DUNNING THORNTON CONSULTANTS LTD
LEAP AUSTRALASIA LTD
SOUTHERN PERSPECTIVES / SOLAR CITY

CLIENT

U.S. DEPARTMENT OF ENERGY
SOLAR DECATHLON 2011
WWW.SOLARDECATHLON.GOV

U.S. DEPARTMENT OF ENERGY SOLAR DECATHLON

MARK	DATE	DESCRIPTION
CN	11-01-11	FOR CONSTRUCTION

LOT NUMBER:	LOT NUMBER
DRAWN BY:	Author
CHECKED BY:	Checker
COPYRIGHT:	

SHEET TITLE

PLUMBING ISOMETRICS

P-905

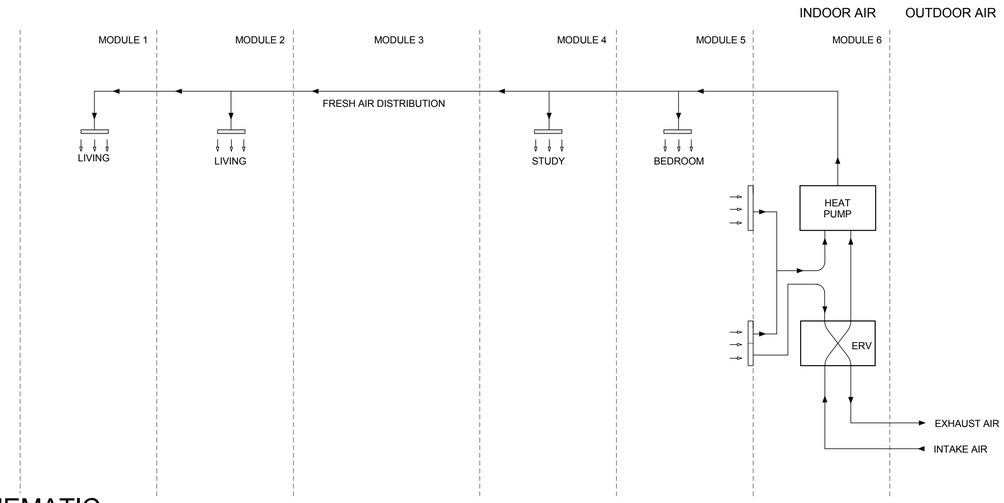

D2 HVAC SCHEMATIC
1 : 48

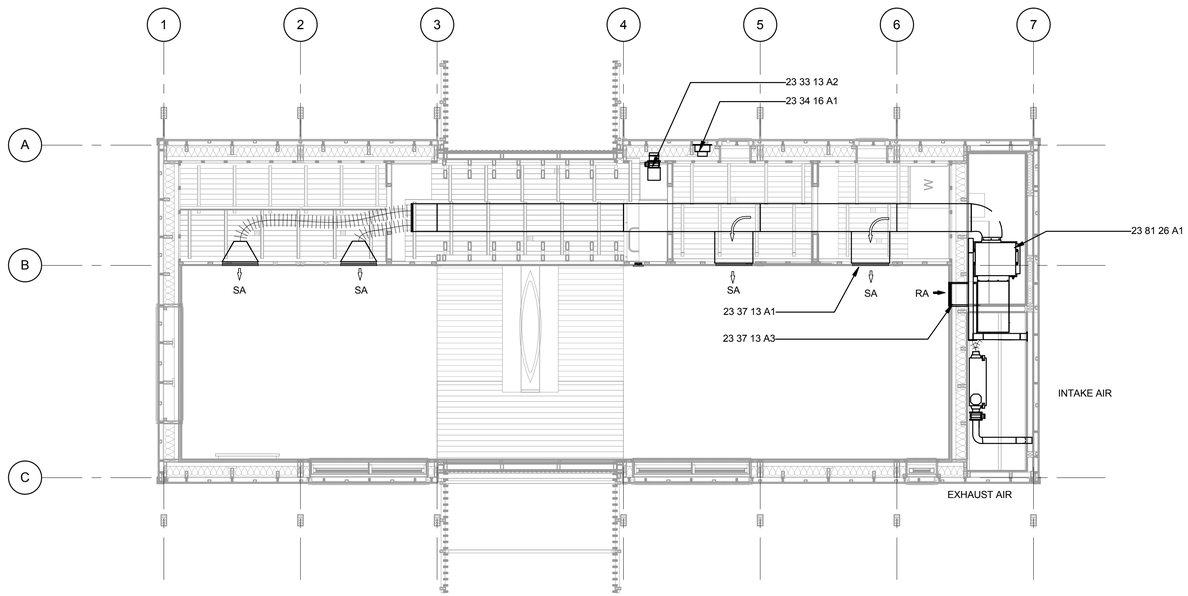

A2 HVAC EQUIPMENT AND DISTRIBUTION PLAN
1 : 48

GENERAL SHEET NOTES

REFERENCE KEYNOTES

23 33 13 A2	HCD 75 150MM X 150MM KITCHEN EXHAUST SHUT OFF DAMPER
23 34 16 A1	IN WALL BATHROOM EXTRACT FAN
23 37 13 A1	600 X 600MM SUPPLY AIR LINEAR DIFFUSERS
23 37 13 A3	350 X 100MM RETURN AIR EGGCRATE GRILLE
23 81 26 A1	MITSIBUSHI ELECTRIC PEA-RP71EA HEAT PUMP INDOOR UNIT

SHEET KEYNOTES

FIRST LIGHT NZ

TEAM NAME:	FIRSTLIGHT NZ
ADDRESS:	139 VIVIAN STREET TE ARO, WELLINGTON NEWZEALAND
CONTACT:	INFO@FIRSTLIGHTHOUSE.AC.NZ WWW.FIRSTLIGHTHOUSE.AC.NZ

CONSULTANTS

TENNENT + BROWN ARCHITECTS
DUNNING THORNTON CONSULTANTS LTD
LEAP AUSTRALASIA LTD
SOUTHERN PERSPECTIVES / SOLAR CITY

CLIENT
U.S. DEPARTMENT OF ENERGY
SOLAR DECATHLON 2011
WWW.SOLARDECATHLON.GOV

U.S. DEPARTMENT OF ENERGY SOLAR DECATHLON

MARK	DATE	DESCRIPTION
CN	11-01-11	FOR CONSTRUCTION

LOT NUMBER:	LOT NUMBER
DRAWN BY:	AUTHOR
CHECKED BY:	CHECKER
COPYRIGHT:	VICTORIA UNIVERSITY

SHEET TITLE
HVAC EQUIPMENT AND DISTRIBUTION PLAN

M-101

8/13/2011 8:41:42 AM

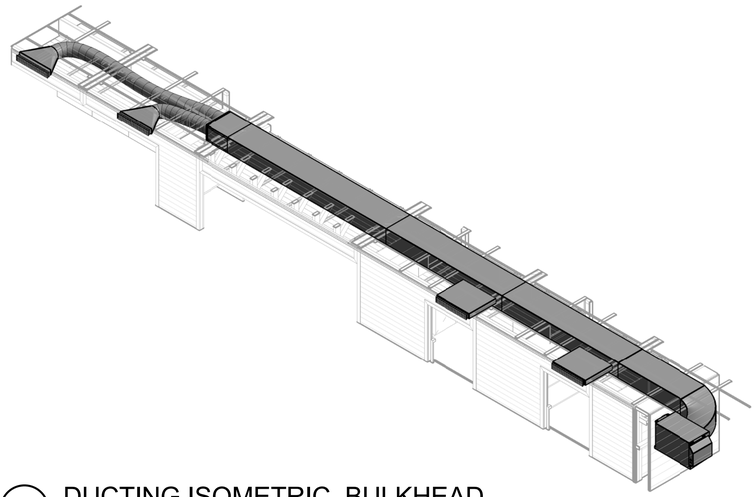

D3 DUCTING ISOMETRIC_BULKHEAD

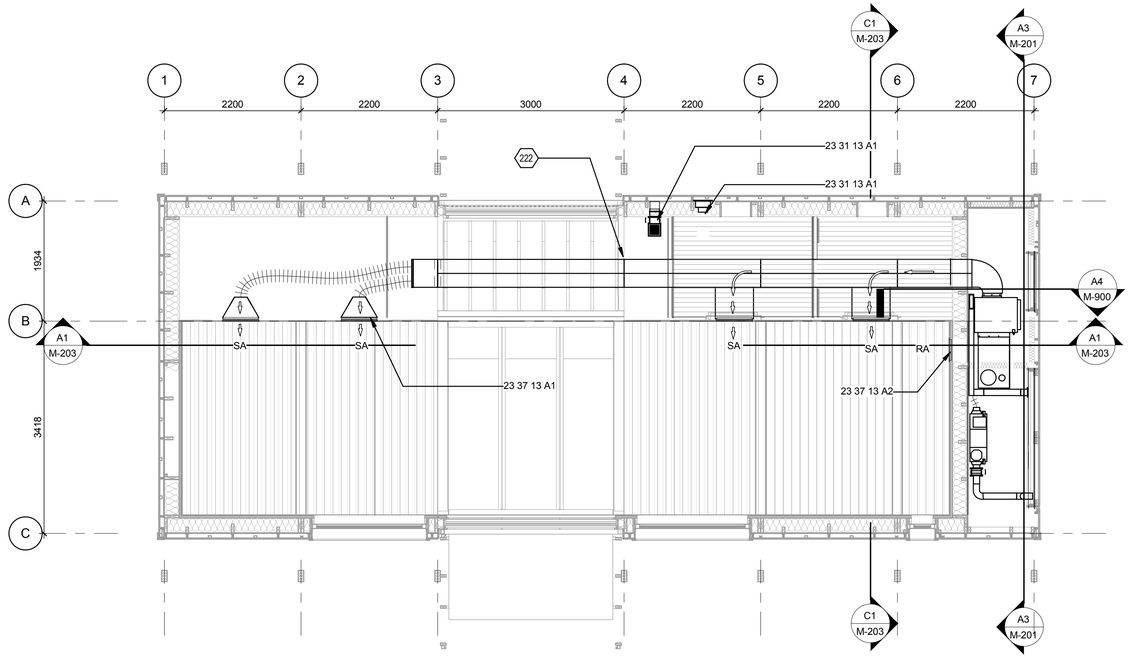

A2 DUCTING
1 : 48

GENERAL SHEET NOTES

REFERENCE KEYNOTES

23 31 13 A1	SPIROSET SEMI-FLEXIABLE ROUND METAL DUCT
23 37 13 A1	600 X 600MM SUPPLY AIR LINEAR DIFFUSERS
23 37 13 A2	350 X 500MM RETURN AIR EGGCRATE GRILLE

SHEET KEYNOTES

222	JOINTS IN DUCTING SO MODULES CAN BE LOCATED ON SITE

FIRST LIGHT NZ

TEAM NAME:	FIRST LIGHT
ADDRESS:	139 VIVIAN STREET TE ARO, WELLINGTON NEWZEALAND
CONTACT:	ELINUTTALL@GMAIL.COM WWW.FIRSTLIGHTHOUSE.AC.NZ

CONSULTANTS

TENNENT + BROWN ARCHITECTS

DUNNING THORNTON CONSULTANTS LTD

LEAP AUSTRALASIA LTD

SOUTHERN PERSPECTIVES / SOLAR CITY

CLIENT

U.S. DEPARTMENT OF ENERGY

SOLAR DECATHLON 2011

WWW.SOLARDECATHLON.GOV

U.S. DEPARTMENT OF ENERGY SOLAR DECATHLON

MARK	DATE	DESCRIPTION
CN	11-01-11	FOR CONSTRUCTION

LOT NUMBER:	LOT NUMBER
DRAWN BY:	Author
CHECKED BY:	Checker

COPYRIGHT:

SHEET TITLE

DUCTING LOCATION PLAN

M-102

8/13/2011 8:41:55 AM

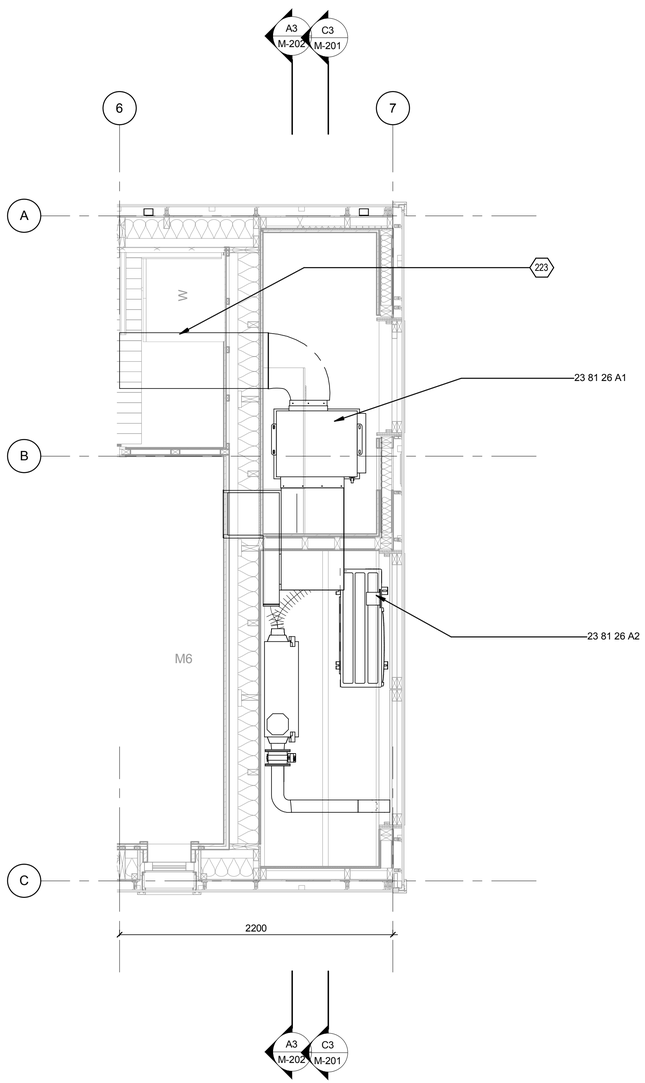

A1 RETURN AIR PLAN
1 : 24

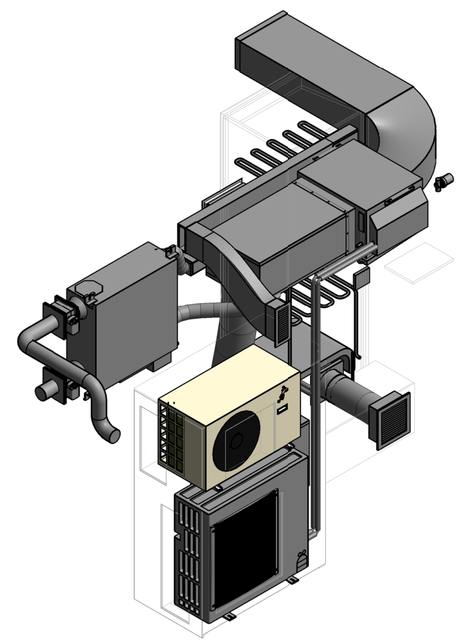

A4 MECHANICAL EQUIPMENT

GENERAL SHEET NOTES

REFERENCE KEYNOTES

23 23 00	REFRIGERANT PIPING
23 81 26 A1	MITSIBUSHI ELECTRIC PEA-RP71EA HEAT PUMP INDOOR UNIT
23 81 26 A2	MITSIBUSHI ELECTRIC PUHZ-RP71VHA2 HEAT PUMP OUTDOOR UNIT

SHEET KEYNOTES

223	450X240MM PREMIER SUPPLY AIR DUCT THAT RUNS THROUGH HOLES IN SHEAR WALL AS DETAILED

FIRST LIGHT NZ

TEAM NAME:	FIRST LIGHT
ADDRESS:	139 VIVIAN STREET TE ARO, WELLINGTON NEWZEALAND
CONTACT:	ELINUTTALL@GMAIL.COM WWW.FIRSTLIGHTHOUSE.AC.NZ

CONSULTANTS

TENNENT + BROWN ARCHITECTS
DUNNING THORNTON CONSULTANTS LTD
LEAP AUSTRALASIA LTD
SOUTHERN PERSPECTIVES / SOLAR CITY

CLIENT
U.S. DEPARTMENT OF ENERGY
SOLAR DECATHLON 2011
WWW.SOLARDECATHLON.GOV

U.S. DEPARTMENT OF ENERGY SOLAR DECATHLON

MARK	DATE	DESCRIPTION
CN	11-01-11	FOR CONSTRUCTION

LOT NUMBER:	LOT NUMBER
DRAWN BY:	Author
CHECKED BY:	Checker
COPYRIGHT:	

SHEET TITLE
SUPPLY AIR EQUIPMENT PLAN

M-103

8/13/2011 8:42:06 AM

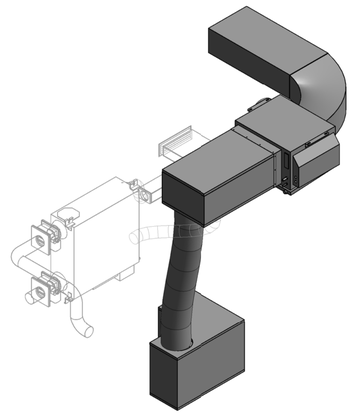

D1 RETURN AIR 3D

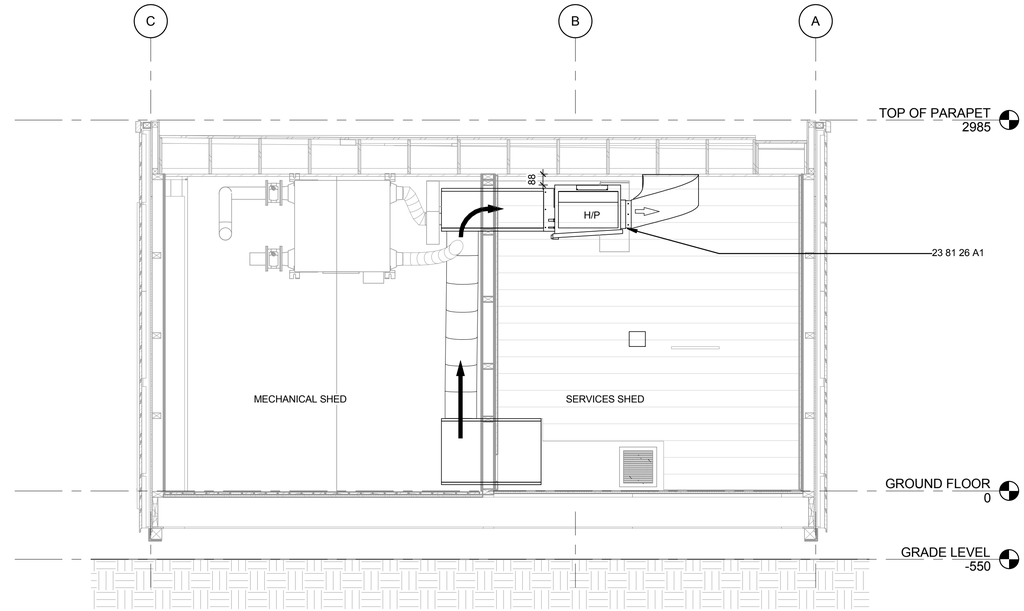

C3 RETURN AIR ELEVATION
1 : 24

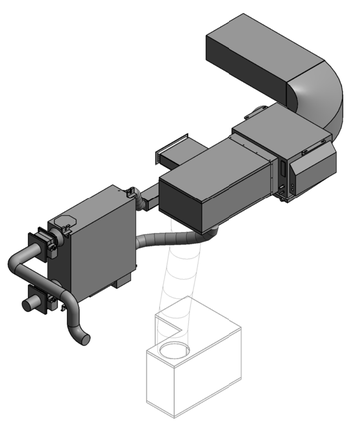

1 FRESH AIR 3D

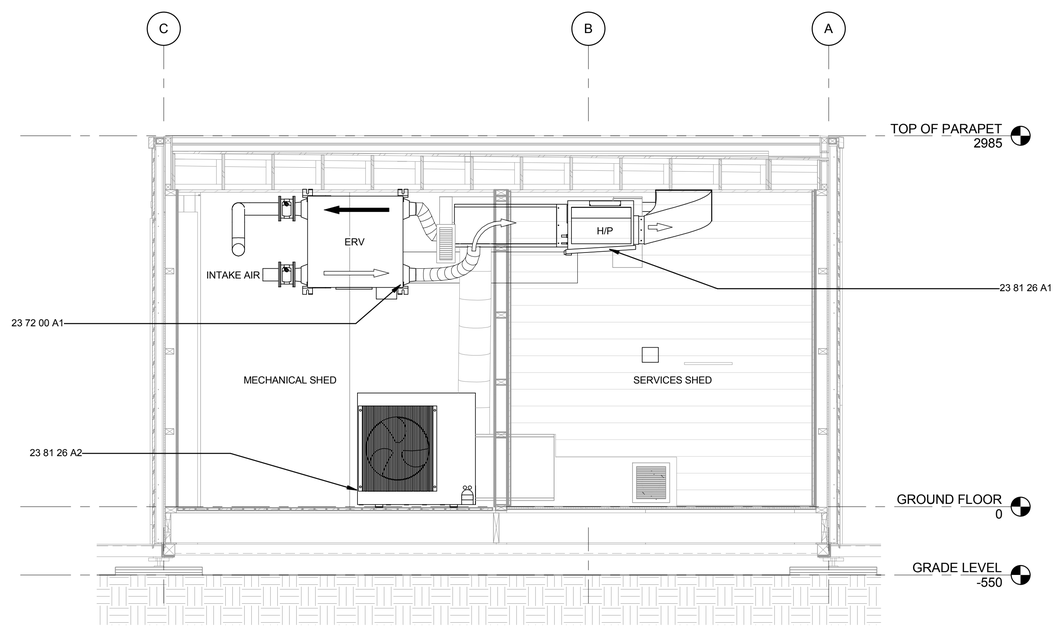

A3 FRESH AIR ELEVATION
1 : 24

GENERAL SHEET NOTES

REFERENCE KEYNOTES

23 72 00 A1	MITSUBISHI ELECTRIC LOSSNAY ENERGY RECOVERY VENTILATION SYSTEM
23 81 26 A1	MITSIBUSHI ELECTRIC PEA-RP71EA HEAT PUMP INDOOR UNIT
23 81 26 A2	MITSIBUSHI ELECTRIC PUHZ-RP71VHA2 HEAT PUMP OUTDOOR UNIT

SHEET KEYNOTES

FIRST LIGHT NZ

TEAM NAME:	FIRST LIGHT
ADDRESS:	139 VIVIAN STREET TE ARO, WELLINGTON NEWZEALAND
CONTACT:	ELINUTTALL@GMAIL.COM WWW.FIRSTLIGHTHOUSE.AC.NZ

CONSULTANTS

TENNENT + BROWN ARCHITECTS
DUNNING THORNTON CONSULTANTS LTD
LEAP AUSTRALASIA LTD
SOUTHERN PERSPECTIVES / SOLAR CITY

CLIENT

U.S. DEPARTMENT OF ENERGY
SOLAR DECATHLON 2011
WWW.SOLARDECATHLON.GOV

U.S. DEPARTMENT OF ENERGY SOLAR DECATHLON

MARK	DATE	DESCRIPTION
CN	11-01-11	FOR CONSTRUCTION

LOT NUMBER:	LOT NUMBER
DRAWN BY:	Author
CHECKED BY:	Checker
COPYRIGHT:	

SHEET TITLE

SUPPLY AIR ELEVATION

M-201

8/13/2011 8:42:29 AM

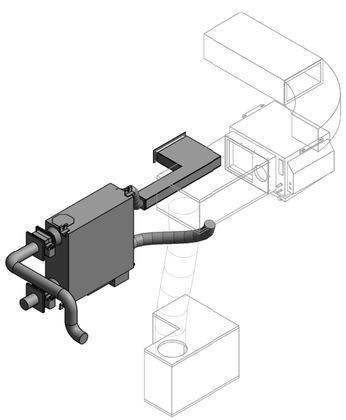

A1 EXHAUST AIR 3D

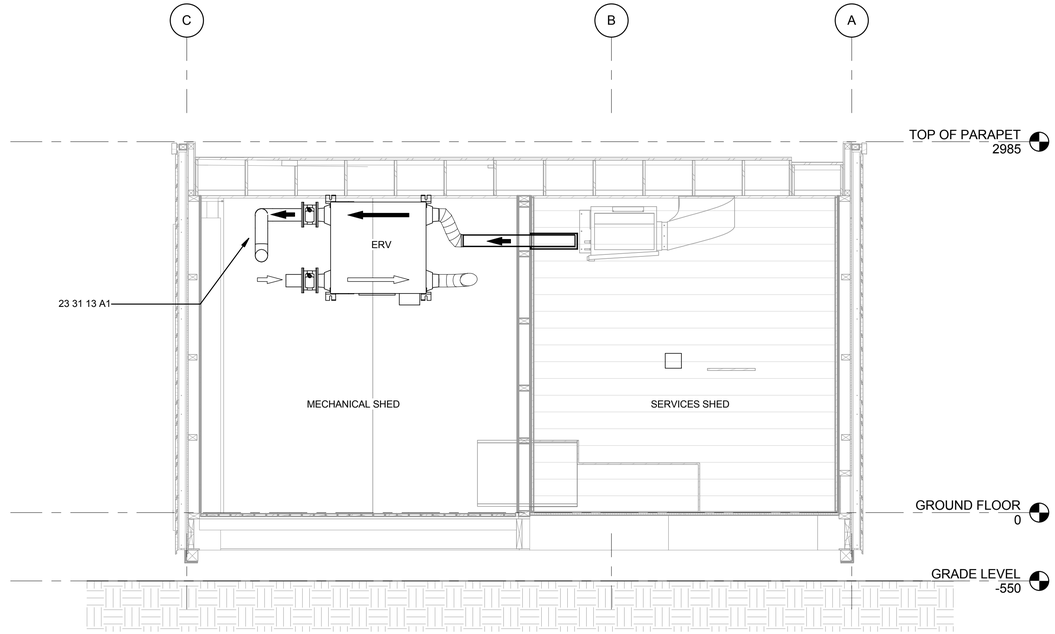

A3 EXHAUST AIR ELEVATION
1 : 24

GENERAL SHEET NOTES

REFERENCE KEYNOTES

23 31 13 A1	SPIROSET SEMI-FLEXIABLE ROUND METAL DUCT

SHEET KEYNOTES

FIRST LIGHT NZ

TEAM NAME:	FIRST LIGHT
ADDRESS:	139 VIVIAN STREET TE ARO, WELLINGTON NEWZEALAND
CONTACT:	ELINUTTALL@GMAIL.COM WWW.FIRSTLIGHTHOUSE.AC.NZ

CONSULTANTS

TENNENT + BROWN ARCHITECTS
DUNNING THORNTON CONSULTANTS LTD
LEAP AUSTRALASIA LTD
SOUTHERN PERSPECTIVES / SOLAR CITY

CLIENT

U.S. DEPARTMENT OF ENERGY
SOLAR DECATHLON 2011
WWW.SOLARDECATHLON.GOV

U.S. DEPARTMENT OF ENERGY SOLAR DECATHLON

MARK	DATE	DESCRIPTION
CN	11-01-11	FOR CONSTRUCTION

LOT NUMBER:	LOT NUMBER
DRAWN BY:	Author
CHECKED BY:	Checker
COPYRIGHT:	

SHEET TITLE

RETURN AIR ELEVATION

M-202

8/13/2011 8:42:40 AM

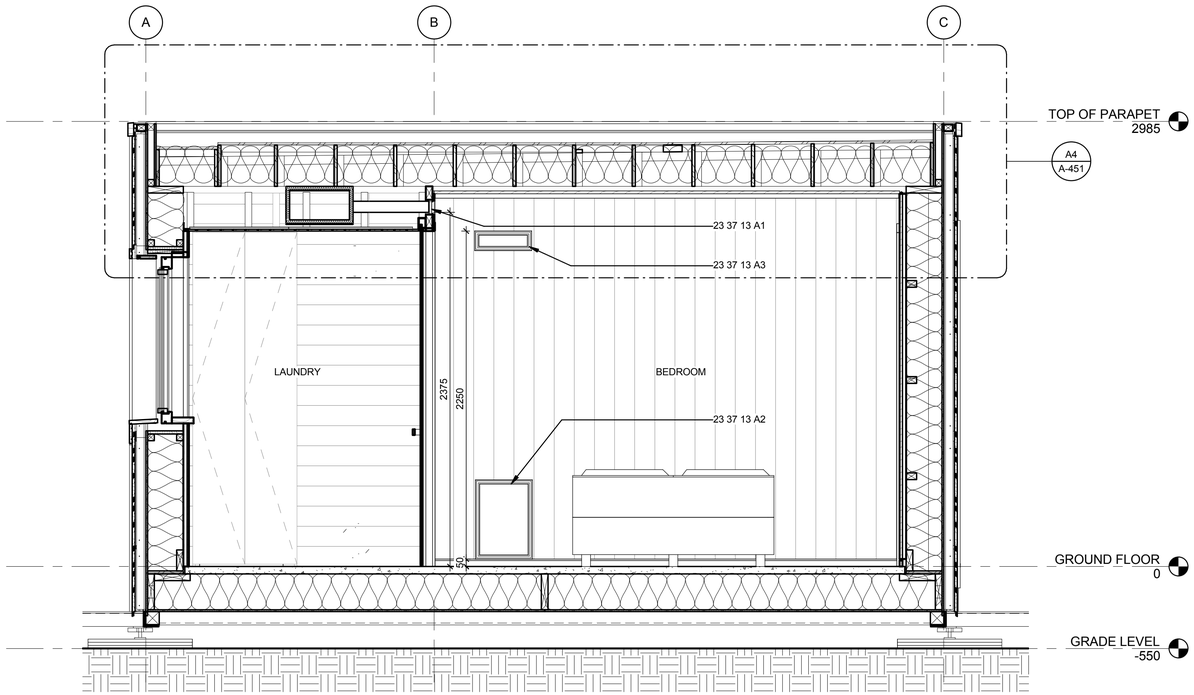

C1 RETURN AIR GRILLS ELEVATION

1 : 20

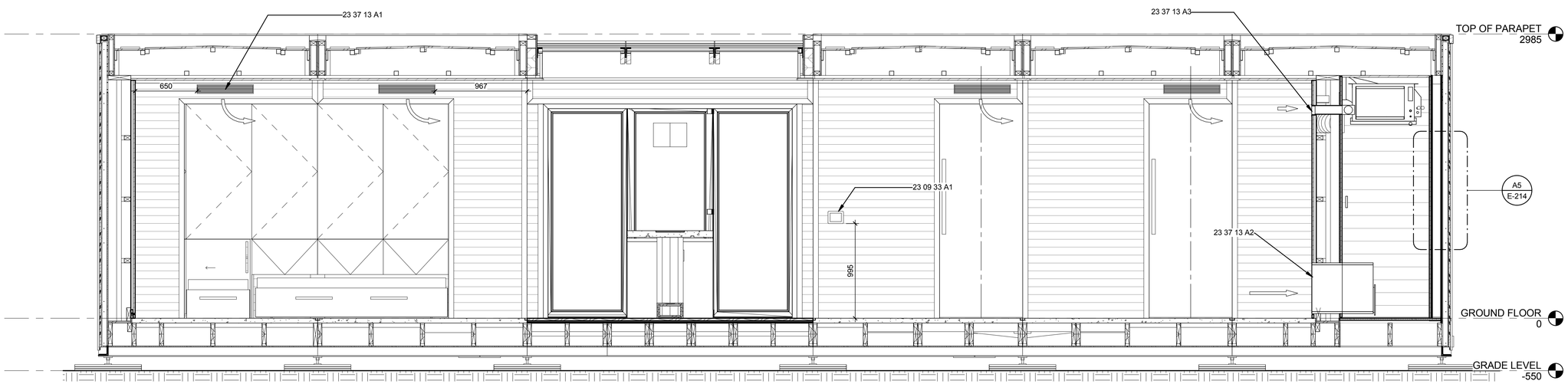

A1 SUPPLY AIR DIFFUSERS ELEVATION

1 : 24

GENERAL SHEET NOTES

REFERENCE KEYNOTES

23 09 33 A1	SCHNEIDER ELECTRIC MAGELIS HMI CONTROLLER
23 37 13 A1	600 X 600MM SUPPLY AIR LINEAR DIFFUSERS
23 37 13 A2	350 X 500MM RETURN AIR EGGCRATE GRILLE
23 37 13 A3	350 X 100MM RETURN AIR EGGCRATE GRILLE

SHEET KEYNOTES

FIRST LIGHT NZ

TEAM NAME:	FIRST LIGHT
ADDRESS:	139 VIVIAN STREET TE ARO, WELLINGTON NEWZEALAND
CONTACT:	ELINUTTALL@GMAIL.COM WWW.FIRSTLIGHTHOUSE.AC.NZ

CONSULTANTS

TENNENT + BROWN ARCHITECTS

DUNNING THORNTON CONSULTANTS LTD

LEAP AUSTRALASIA LTD

SOUTHERN PERSPECTIVES / SOLAR CITY

CLIENT

U.S. DEPARTMENT OF ENERGY

SOLAR DECATHLON 2011

WWW.SOLARDECATHLON.GOV

U.S. DEPARTMENT OF ENERGY SOLAR DECATHLON

MARK	DATE	DESCRIPTION
CN	11-01-11	FOR CONSTRUCTION

LOT NUMBER:	LOT NUMBER
DRAWN BY:	Author
CHECKED BY:	Checker
COPYRIGHT:	

SHEET TITLE

DIFFUSERS & GRILLS ELEVATION

M-203

8/13/2011 8:42:48 AM

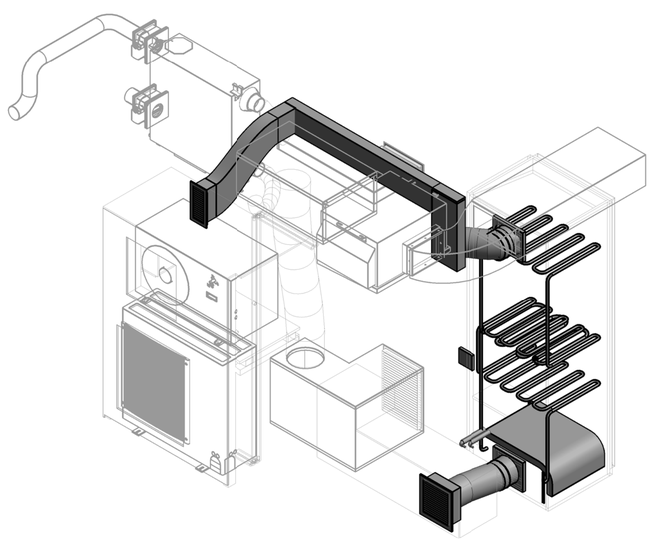

A1 DRYING ROOM_DUCTING

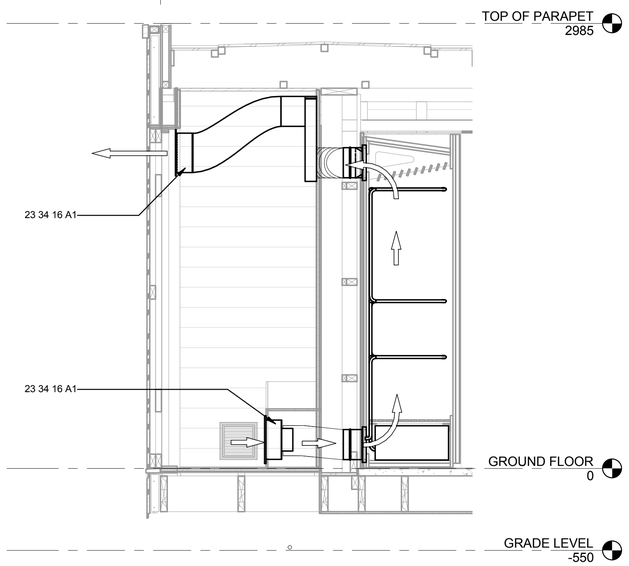

A4 Section 10
1 : 20

GENERAL SHEET NOTES

REFERENCE KEYNOTES

23 34 16 A1	IN WALL BATHROOM EXTRACT FAN

SHEET KEYNOTES

FIRST LIGHT NZ

TEAM NAME:	FIRST LIGHT
ADDRESS:	139 VIVIAN STREET TE ARO, WELLINGTON NEWZEALAND
CONTACT:	ELINUTTALL@GMAIL.COM WWW.FIRSTLIGHTHOUSE.AC.NZ

CONSULTANTS

TENNENT + BROWN ARCHITECTS
DUNNING THORNTON CONSULTANTS LTD
LEAP AUSTRALASIA LTD
SOUTHERN PERSPECTIVES / SOLAR CITY

CLIENT

U.S. DEPARTMENT OF ENERGY
SOLAR DECATHLON 2011
WWW.SOLARDECATHLON.GOV

U.S. DEPARTMENT OF ENERGY SOLAR DECATHLON

MARK	DATE	DESCRIPTION
CN	11-01-11	FOR CONSTRUCTION

LOT NUMBER:	LOT NUMBER
DRAWN BY:	Author
CHECKED BY:	Checker
COPYRIGHT:	

SHEET TITLE

DRYING ROOM

M-900

8/13/2011 8:42:59 AM

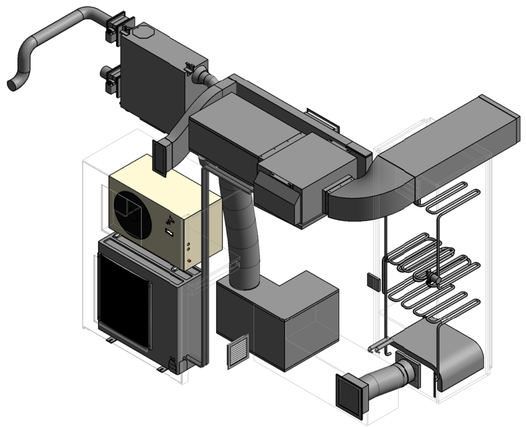

D1 MECHANICAL EQUIPMENT 3D1

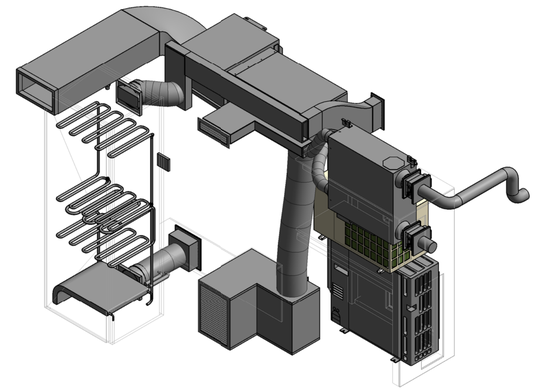

D4 MECHANICAL EQUIPMENT 3D2

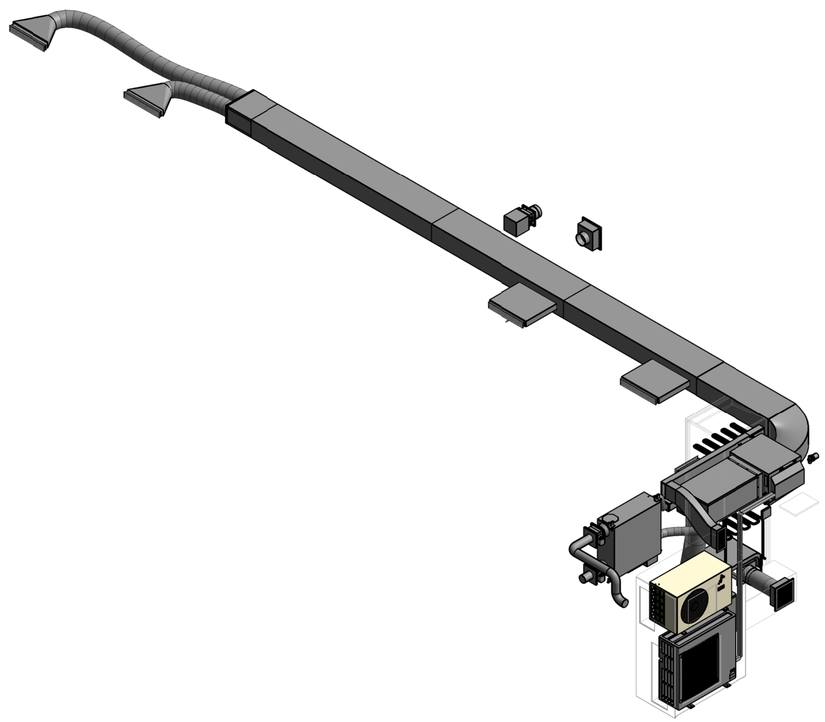

A1 DUCTING ISOMETRIC

GENERAL SHEET NOTES

REFERENCE KEYNOTES

SHEET KEYNOTES

FIRST LIGHT NZ

TEAM NAME:	FIRST LIGHT
ADDRESS:	139 VIVIAN STREET TE ARO, WELLINGTON NEWZEALAND
CONTACT:	ELINUTTALL@GMAIL.COM WWW.FIRSTLIGHTHOUSE.AC.NZ

CONSULTANTS

TENNENT + BROWN ARCHITECTS
DUNNING THORNTON CONSULTANTS LTD
LEAP AUSTRALASIA LTD
SOUTHERN PERSPECTIVES / SOLAR CITY

CLIENT

U.S. DEPARTMENT OF ENERGY
SOLAR DECATHLON 2011
WWW.SOLARDECATHLON.GOV

U.S. DEPARTMENT OF ENERGY SOLAR DECATHLON

MARK	DATE	DESCRIPTION
CN	11-01-11	FOR CONSTRUCTION

LOT NUMBER:	LOT NUMBER
DRAWN BY:	AUTHOR
CHECKED BY:	CHECKER
COPYRIGHT:	

SHEET TITLE

HVAC DUCTING ISOMETRICS

M-901

8/13/2011 8:43:12 AM

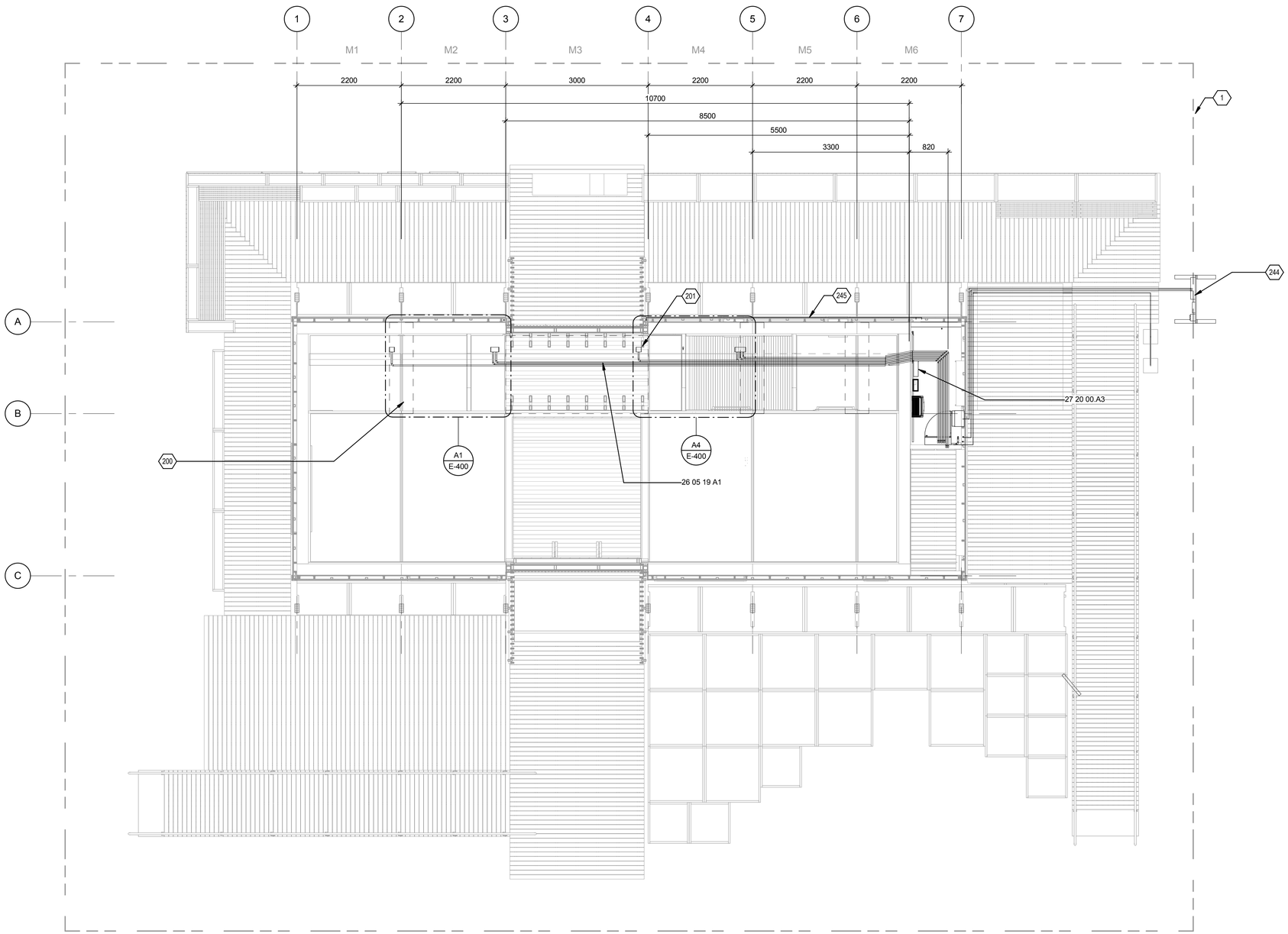

A1 ELECTRICAL DISTRIBUTION PLAN
1 : 48

0 2' 4' 8'

8/13/2011 8:28:04 AM

GENERAL SHEET NOTES

REFERENCE KEYNOTES

26 05 19 A1	25 CORE, 2.5MM2 (AWG 14) OFLEX CLASSIC 130H MULTICORE CABLE
27 20 00.A3	ORGANIZERS ENCLOSURE

SHEET KEYNOTES

1	SITE BOUNDARY
200	REMOVE CEILING PANELS BETWEEN MODULE, ALLOW PLUGS TO BE JOINED DURING HOUSE CONSTRUCTION
201	MULTIZONE CABLES RUN FROM PANELBOARD TO EACH INDIVIDUAL MODULE IN WIRE MESH CABLE TRAY TO BE PLUGGED CONNECTED ON SITE
244	UTILITY INTERCONNECTION POINT, LOCATION TO BE CONFIRMED
245	50MM PVC CONDUIT INSIDE CLADING CAVITY TO RUN PV DC CONDUCTORS ON SITE

FIRST LIGHT NZ

TEAM NAME:	FIRST LIGHT
ADDRESS:	139 VIVIAN STREET TE ARO, WELLINGTON NEWZEALAND
CONTACT:	ELINUTTALL@GMAIL.COM WWW.FIRSTLIGHTHOUSE.AC.NZ

CONSULTANTS

TENNENT + BROWN ARCHITECTS
DUNNING THORNTON CONSULTANTS LTD
LEAP AUSTRALASIA LTD
SOUTHERN PERSPECTIVES / SOLAR CITY

CLIENT

U.S. DEPARTMENT OF ENERGY
SOLAR DECATHLON 2011
WWW.SOLARDECATHLON.GOV

U.S. DEPARTMENT OF ENERGY SOLAR DECATHLON

MARK	DATE	DESCRIPTION
CN	11-01-11	FOR CONSTRUCTION

LOT NUMBER:	LOT NUMBER
DRAWN BY:	BJ
CHECKED BY:	CHECKER
COPYRIGHT:	

SHEET TITLE

ELECTRICAL DISTRIBUTION SITE PLAN

E-101

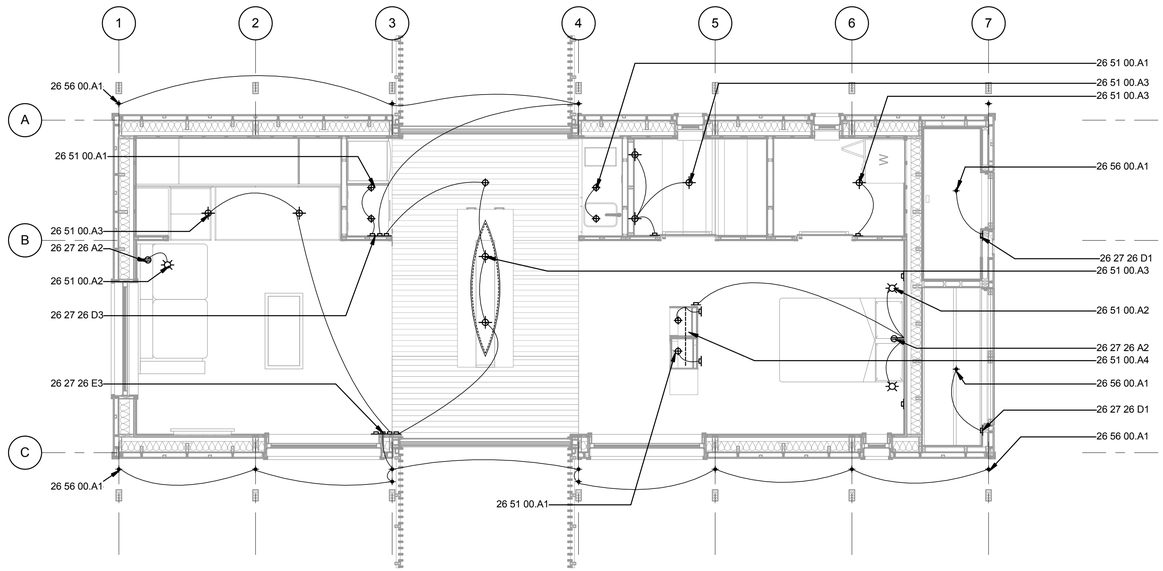

C2 LIGHTING PLAN
1 : 48

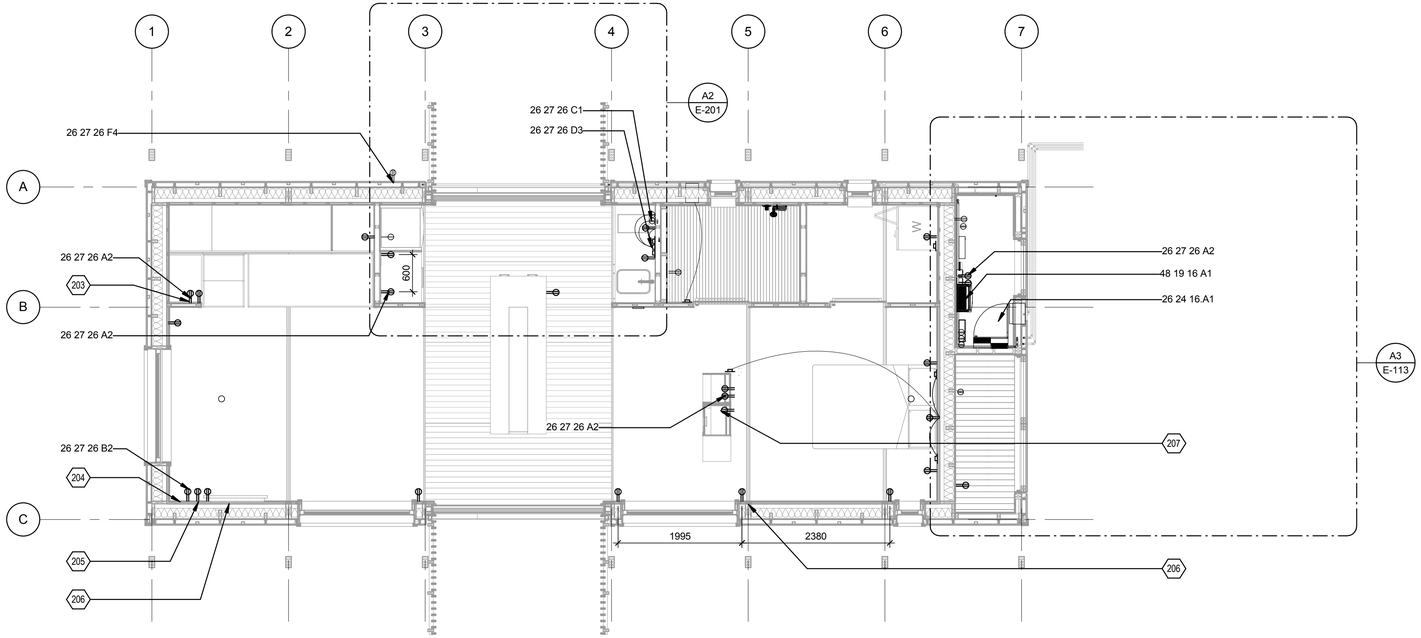

A2 ELECTRICAL POWER PLAN
1 : 48

0 2' 4' 8'

GENERAL SHEET NOTES

1. LANDSCAPE ELEMENTS NOT SHOWN IN THIS VIEW FOR CLARITY

REFERENCE KEYNOTES

26 24 16.A1	PRISMA PLUS 5 ROW 120 WAY WALL MOUNTED PANEL BOARD
26 27 26 A2	PDL 800 SERIES 10A 240V HORIZONTAL INTEGRALLY SWITCHED DOUBLE RECEPTACLE
26 27 26 B2	PDL 800 SERIES 10A 240V VERTICAL INTEGRALLY SWITCHED DOUBLE RECEPTACLE
26 27 26 C1	PDL 800 SERIES 16A 240V HORIZONTAL SWITCHED PERMANENT CONNECTION UNIT
26 27 26 D1	HORIZONTAL ONE GANG PUSH BUTTON SWITCH
26 27 26 D3	HORIZONTAL THREE GANG PUSH BUTTON SWITCH
26 27 26 E3	VERTICAL FOUR GANG PUSH BUTTON SWITCH
26 27 26 F4	PDL 56 16A 240V SERIES SWITCHED OUTDOOR RECEPTACLE
26 51 00.A1	6W RECESSED LED DOWNLIGHT
26 51 00.A2	8W EDISON SCREW LED BULB IN STANDARD LAMPSHADE
26 51 00.A3	12W RECESSED LED DOWNLIGHT
26 51 00.A4	RECESSED LED STRIP - 4.8W/M
26 56 00.A1	1W MINI OUTDOOR LED SPOT
48 19 16 A1	SMA SUNNY BOY INVERTER - MODEL SBA 6000 US

SHEET KEYNOTES

203	POWERPOINTS MOUNTED IN JOINERY UNIT. SEE JOINERY DETAILS
204	FLUSH BOX MOUNTED TO VERTICAL BATTENS INSIDE WALL VAPOUR CHECK
205	WIRING OF ALL OUTLETS TO RUN INSIDE THE CAVITY BETWEEN THE BUILDING VAPOUR CHECK AND THE INTERIOR WHERE POSSIBLE
206	ADDITIONAL VERTICAL BLOCKING IN WALLS TO ATTACH FLUSH BOXES TO. EXACT LOCATIONS TO BE CONFIRMED ON SITE
207	STUDY OUTLETS MOUNTED INSIDE STUDY UNIT, SEE INTERIOR ELEVATION FOR DETAILS

ELECTRICAL LEGEND

- DIRECT WIRED PERMANENT CONNECTION UNIT
- PDL 800 SERIES 240V HORIZONTALLY INTEGRALLY SWITCHED SINGLE SOCKET OUTLETS MOUNTED 300 ABOVE FLOOR
- PDL 800 SERIES 240V HORIZONTALLY INTEGRALLY SWITCHED DOUBLE SOCKET OUTLETS MOUNTED 300 ABOVE FLOOR
- PDL 800 SERIES 240V HORIZONTALLY INTEGRALLY SWITCHED QUAD SOCKET OUTLETS MOUNTED 300 ABOVE FLOOR

FIRST LIGHT NZ

TEAM NAME:	FIRST LIGHT
ADDRESS:	139 VIVIAN STREET TE ARO, WELLINGTON NEWZEALAND
CONTACT:	ELINUTTALL@GMAIL.COM WWW.FIRSTLIGHTHOUSE.AC.NZ

CONSULTANTS

TENNENT + BROWN ARCHITECTS
DUNNING THORNTON CONSULTANTS LTD
LEAP AUSTRALASIA LTD
SOUTHERN PERSPECTIVES / SOLAR CITY

CLIENT

U.S. DEPARTMENT OF ENERGY
SOLAR DECATHLON 2011
WWW.SOLARDECATHLON.GOV

U.S. DEPARTMENT OF ENERGY SOLAR DECATHLON

MARK	DATE	DESCRIPTION
CN	11-01-11	FOR CONSTRUCTION

LOT NUMBER:	LOT NUMBER
DRAWN BY:	AUTHOR
CHECKED BY:	CHECKER
COPYRIGHT:	

SHEET TITLE

ELECTRICAL POWER & LIGHTING PLAN

E-111

8/13/2011 8:28:22 AM

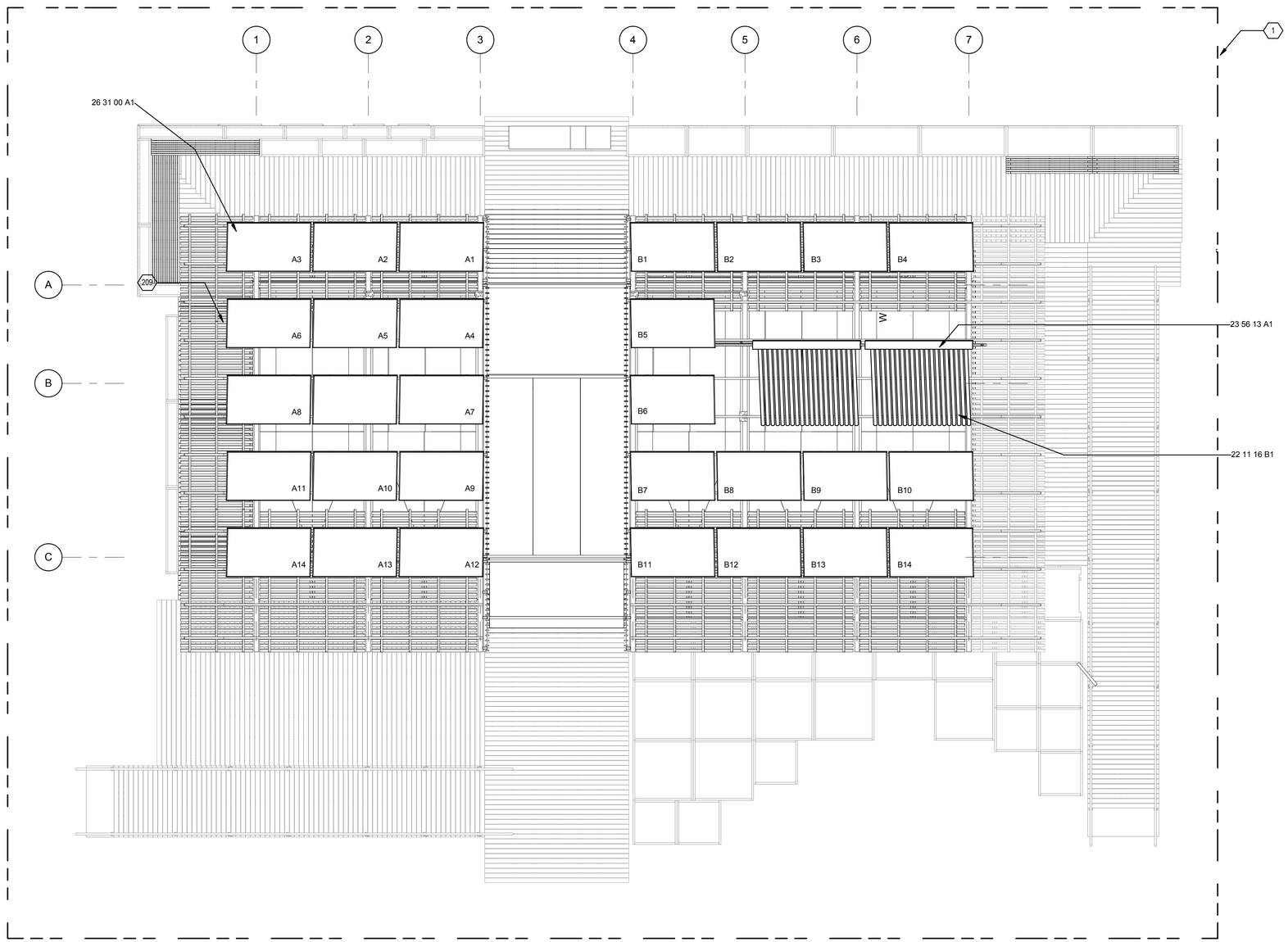

A1 PV SYSTEM PLAN
1 : 48

0 2' 4' 8'

8/13/2011 8:28:32 AM

GENERAL SHEET NOTES

REFERENCE KEYNOTES

22 11 16 B1	15MM COPPER SOLAR FLUID CIRCULATION LINE
23 56 13 A1	20 TUBE EVACUATED TUBE SOLAR HOT WATER COLLECTORS
26 31 00 A1	225W MITSUBISHI PHOTOVOLTAIC COLLECTORS

SHEET KEYNOTES

1	SITE BOUNDARY
209	PANELS MOUNTED FORWARD OF FRONT RAFTER SO BACK LINES UP WITH BACK RAFTER @ 15 DEGREES

FIRST LIGHT NZ

TEAM NAME:	FIRSTLIGHT NZ
ADDRESS:	139 VIVIAN STREET TE ARO, WELLINGTON NEWZEALAND
CONTACT:	INFO@FIRSTLIGHTHOUSE.AC.NZ WWW.FIRSTLIGHTHOUSE.AC.NZ

CONSULTANTS

TENNENT + BROWN ARCHITECTS
DUNNING THORNTON CONSULTANTS LTD
LEAP AUSTRALASIA LTD
SOUTHERN PERSPECTIVES / SOLAR CITY

CLIENT

U.S. DEPARTMENT OF ENERGY
SOLAR DECATHLON 2011
WWW.SOLARDECATHLON.GOV

U.S. DEPARTMENT OF ENERGY SOLAR DECATHLON

MARK	DATE	DESCRIPTION
CN	11-01-11	FOR CONSTRUCTION

LOT NUMBER:	LOT NUMBER
DRAWN BY:	AUTHOR
CHECKED BY:	CHECKER
COPYRIGHT:	VICTORIA UNIVERSITY

SHEET TITLE

PV SYSTEMS PLAN

E-112

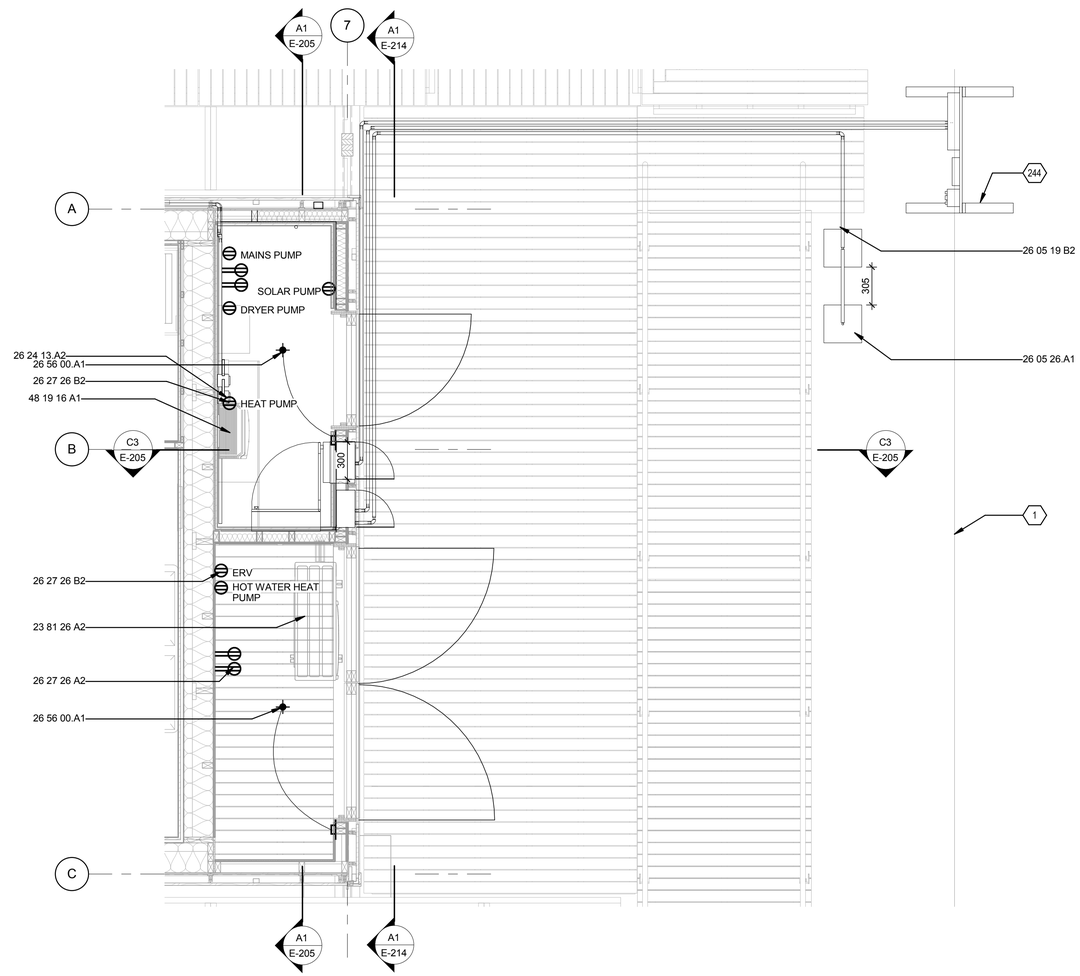

A3 ELECTRICAL POWER PLAN - SHED
1 : 24

0 1' 2' 4'

GENERAL SHEET NOTES

REFERENCE KEYNOTES

22 33 30 A1	360 LITRE INSULATED STAINLESS STEEL HOT WATER CYLINDER WITH OVERFLOW TRAY
23 81 26 A2	MITSIBUSHI ELECTRIC PUHZ-RP71VHA2 HEAT PUMP OUTDOOR UNIT
26 05 19 B2	AWG #3 THWN-2
26 05 26.A1	ORGANISER SUPPLIED GROUNDING ELECTRODES. 15.9MM Ø GROUDING ROD TO EXTEND 460MM INTO GROUND. NOTE THAT THESE ARE THE ONLY ITEMS WHICH PENETRATE THE GROUND
26 24 13.A2	DC ISOLATOR
26 27 26 A2	PDL 800 SERIES 10A 240V HORIZONTAL INTEGRALLY SWITCHED DOUBLE RECEPTACLE
26 27 26 B2	PDL 800 SERIES 10A 240V VERTICAL INTEGRALLY SWITCHED DOUBLE RECEPTACLE
26 56 00.A1	1W MINI OUTDOOR LED SPOT
48 19 16 A1	SMA SUNNY BOY INVERTER - MODEL SBA 6000 US

SHEET KEYNOTES

1	SITE BOUNDARY
244	UTILITY INTERCONNECTION POINT, LOCATION TO BE CONFIRMED

FIRST LIGHT NZ

TEAM NAME:	FIRST LIGHT
ADDRESS:	139 VIVIAN STREET TE ARO, WELLINGTON NEWZEALAND
CONTACT:	ELINUTTALL@GMAIL.COM WWW.FIRSTLIGHTHOUSE.AC.NZ

CONSULTANTS

TENNENT + BROWN ARCHITECTS

DUNNING THORNTON CONSULTANTS LTD

LEAP AUSTRALASIA LTD

SOUTHERN PERSPECTIVES / SOLAR CITY

CLIENT

U.S. DEPARTMENT OF ENERGY

SOLAR DECATHLON 2011

WWW.SOLARDECATHLON.GOV

U.S. DEPARTMENT OF ENERGY SOLAR DECATHLON

MARK	DATE	DESCRIPTION
CN	11-01-11	FOR CONSTRUCTION

LOT NUMBER:	LOT NUMBER
DRAWN BY:	AUTHOR
CHECKED BY:	CHECKER
COPYRIGHT:	

SHEET TITLE

POWER PLAN DETAILS

E-113

8/13/2011 8:28:37 AM

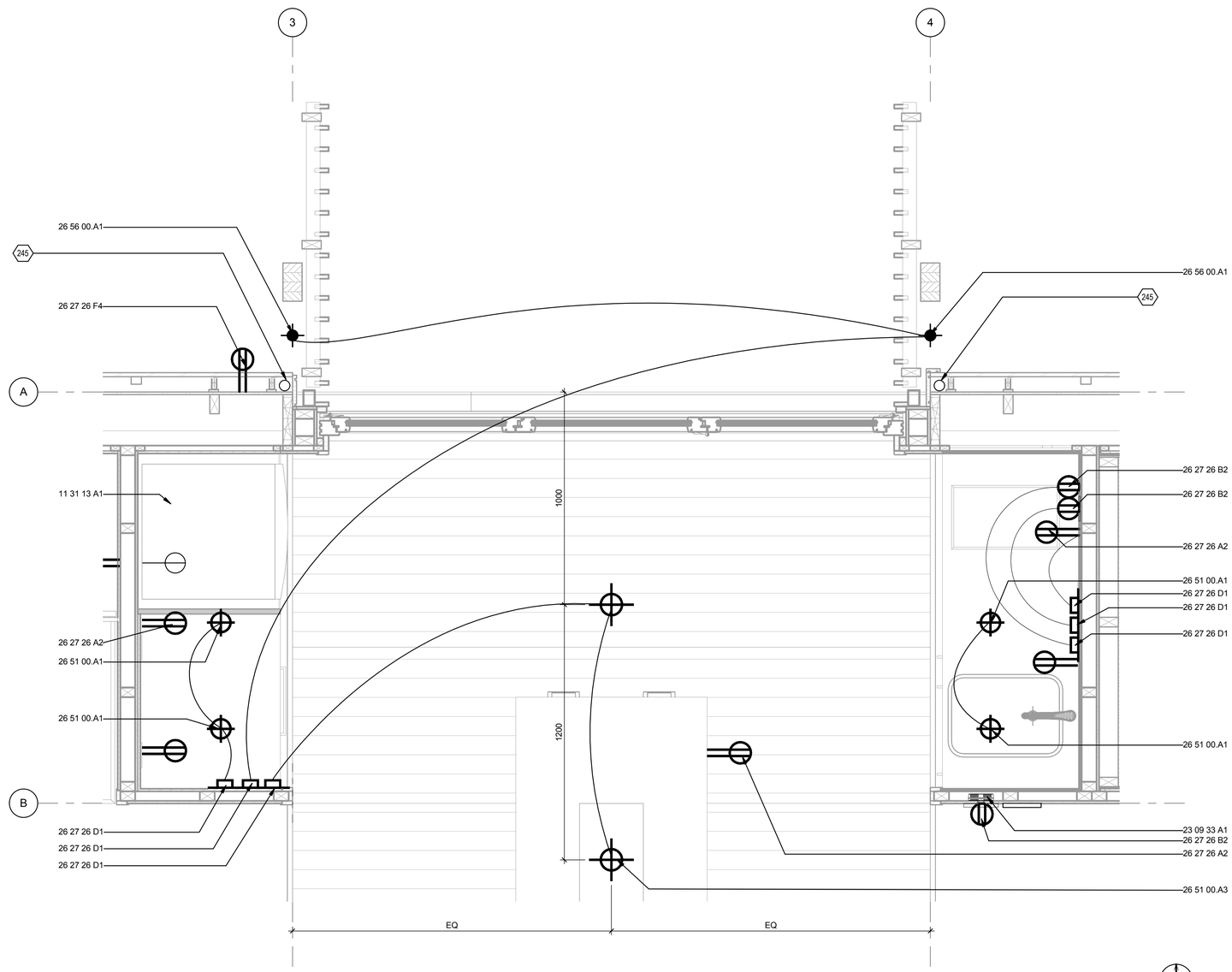

A2 ELECTRICAL PLAN - KITCHEN
1 : 12

0 1/2' 1' 2'

GENERAL SHEET NOTES

1.
LANDSCAPE ELEMENTS ARE NOT SHOWN IN THIS VIEW FOR CLARITY

REFERENCE KEYNOTES

11 31 13 A1	FISHER & PAYKEL FRIDGE FREEZER MODEL E331T
23 09 33 A1	SCHNEIDER ELECTRIC MAGELIS HMI CONTROLLER
26 27 26 A2	PDL 800 SERIES 10A 240V HORIZONTAL INTEGRALLY SWITCHED DOUBLE RECEPTACLE
26 27 26 B2	PDL 800 SERIES 10A 240V VERTICAL INTEGRALLY SWITCHED DOUBLE RECEPTACLE
26 27 26 D1	HORIZONTAL ONE GANG PUSH BUTTON SWITCH
26 27 26 F4	PDL 56 16A 240V SERIES SWITCHED OUTDOOR RECEPTACLE
26 51 00.A1	6W RECESSED LED DOWNLIGHT
26 51 00.A3	12W RECESSED LED DOWNLIGHT
26 56 00.A1	1W MINI OUTDOOR LED SPOT

SHEET KEYNOTES

245	50MM PVC CONDUIT INSIDE CLADING CAVITY TO RUN PV DC CONDUCTORS ON SITE

FIRST LIGHT NZ

TEAM NAME:	FIRSTLIGHT NZ
ADDRESS:	139 VIVIAN STREET TE ARO, WELLINGTON NEWZEALAND
CONTACT:	INFO@FIRSTLIGHTHOUSE.AC.NZ WWW.FIRSTLIGHTHOUSE.AC.NZ

CONSULTANTS

TENNENT + BROWN ARCHITECTS
DUNNING THORNTON CONSULTANTS LTD
LEAP AUSTRALASIA LTD
SOUTHERN PERSPECTIVES / SOLAR CITY

CLIENT
U.S. DEPARTMENT OF ENERGY
SOLAR DECATHLON 2011
WWW.SOLARDECATHLON.GOV

U.S. DEPARTMENT OF ENERGY SOLAR DECATHLON

MARK	DATE	DESCRIPTION
CN	11-01-11	FOR CONSTRUCTION

LOT NUMBER:	LOT NUMBER
DRAWN BY:	Author
CHECKED BY:	Checker
COPYRIGHT:	VICTORIA UNIVERSITY

SHEET TITLE
ELECTRICAL PLAN - KITCHEN

E-201

8/13/2011 8:28:44 AM

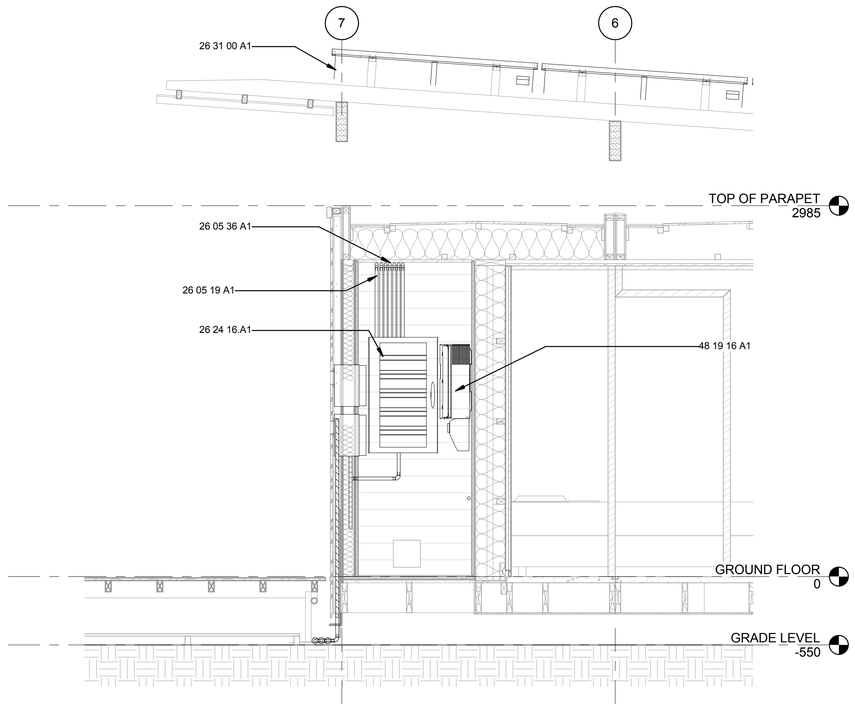

C3 ELECTRICAL ELEVATION - SWITCHBOARD

1 : 24

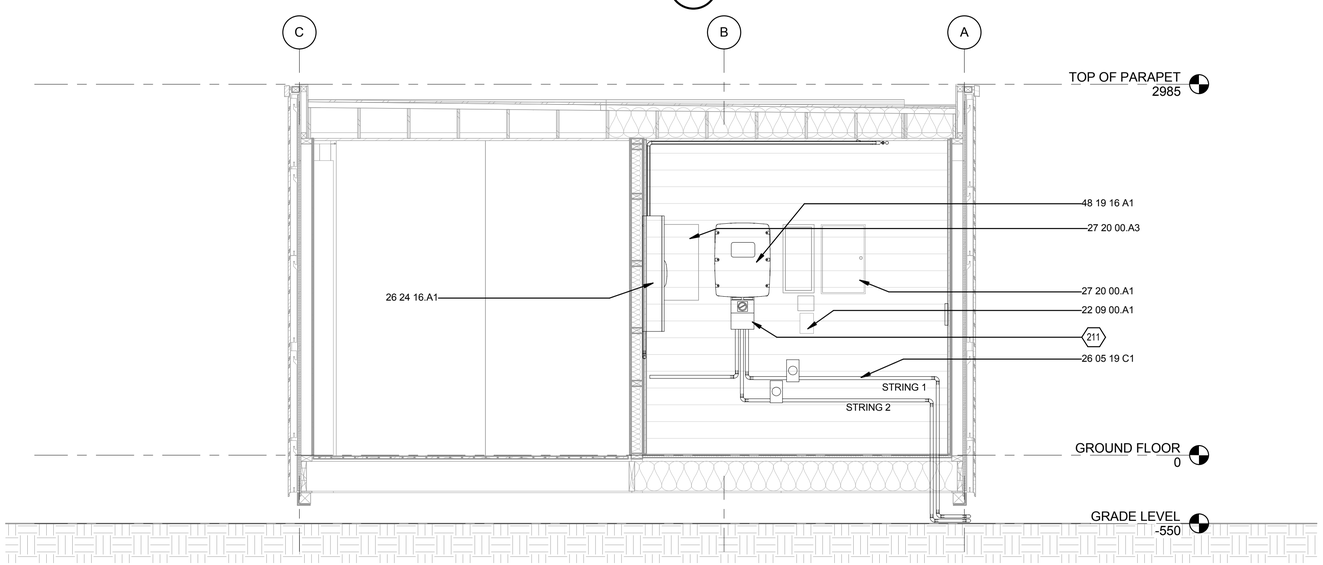

A1 ELECTRICAL ELEVATION - SHED

1 : 24

0 1' 2' 4'

GENERAL SHEET NOTES

REFERENCE KEYNOTES

22 09 00.A1	SOREL TEMPERATURE DIFFERENCE SOLAR CONTROLLER
22 32 00	RESIDENTIAL DOMESTIC AIR-TO-WATER HEAT PUMP WATER HEATER
23 81 26 A2	MITSIBUSHI ELECTRIC PUHZ-RP71VHA2 HEAT PUMP OUTDOOR UNIT
26 05 19 A1	25 CORE, 2.5MM2 (AWG 14) OFLEX CLASSIC 130H MULTICORE CABLE
26 05 19 C1	AWG #10 USE-2/RHW-2
26 05 36 A1	200MM X 30MM UNISTRUT BASKET TRAY
26 24 16.A1	PRISMA PLUS 5 ROW 120 WAY WALL MOUNTED PANEL BOARD
26 31 00 A1	225W MITSUBISHI PHOTOVOLTAIC COLLECTORS
27 20 00.A1	LEXCOM 22" HOME NETWORK DISTRIBUTION CABINET
27 20 00.A3	ORGANIZERS ENCLOSURE
48 19 16 A1	SMA SUNNY BOY INVERTER - MODEL SBA 6000 US

SHEET KEYNOTES

211	SMA INVERTER FOR OPERATION IN THE U.S, THIS WILL BE REPLACED WITH AN EQUIVALENT N.Z INVERTER

FIRST LIGHT NZ

TEAM NAME:	FIRST LIGHT
ADDRESS:	139 VIVIAN STREET TE ARO, WELLINGTON NEWZEALAND
CONTACT:	ELINUTTALL@GMAIL.COM WWW.FIRSTLIGHTHOUSE.AC.NZ

CONSULTANTS

TENNENT + BROWN ARCHITECTS

DUNNING THORNTON CONSULTANTS LTD

LEAP AUSTRALASIA LTD

SOUTHERN PERSPECTIVES / SOLAR CITY

CLIENT

U.S. DEPARTMENT OF ENERGY

SOLAR DECATHLON 2011

WWW.SOLARDECATHLON.GOV

U.S. DEPARTMENT OF ENERGY SOLAR DECATHLON

MARK	DATE	DESCRIPTION
CN	11-01-11	FOR CONSTRUCTION

LOT NUMBER:	LOT NUMBER
DRAWN BY:	Author
CHECKED BY:	Checker
COPYRIGHT:	

SHEET TITLE

ELECTRICAL ELEVATIONS

E-205

8/13/2011 8:28:49 AM

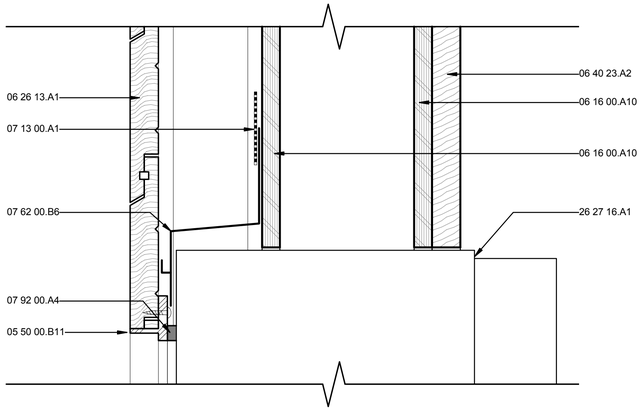

D1 METER BOX HEAD SECTION
1 : 2

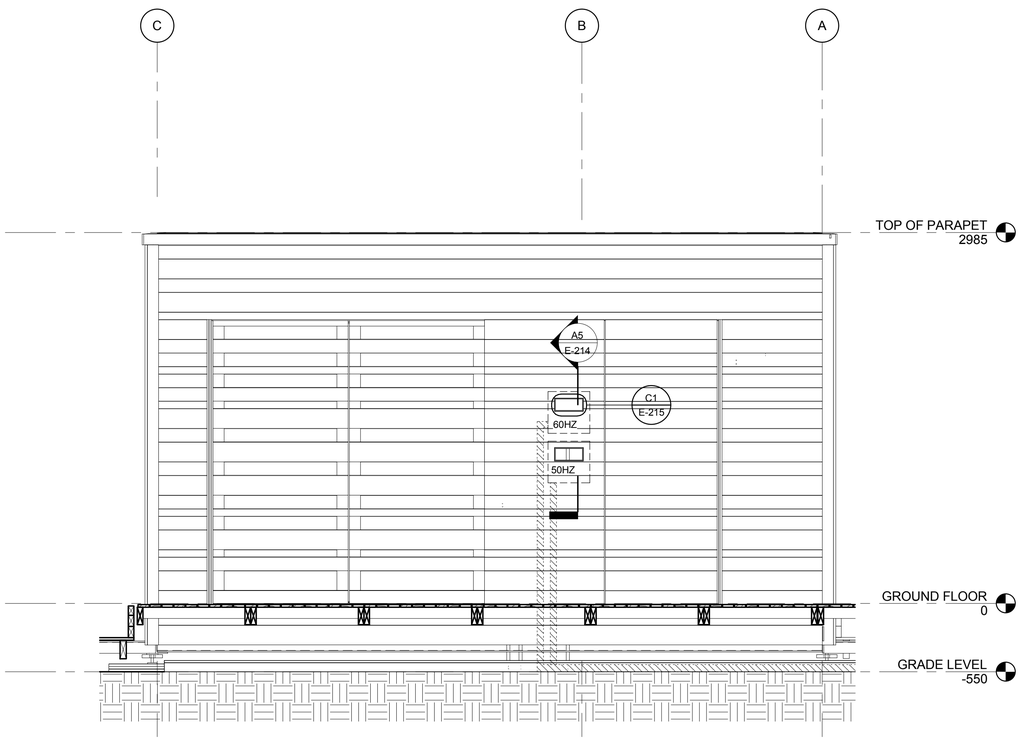

A1 METER HOUSING - ELEVATION
1 : 24

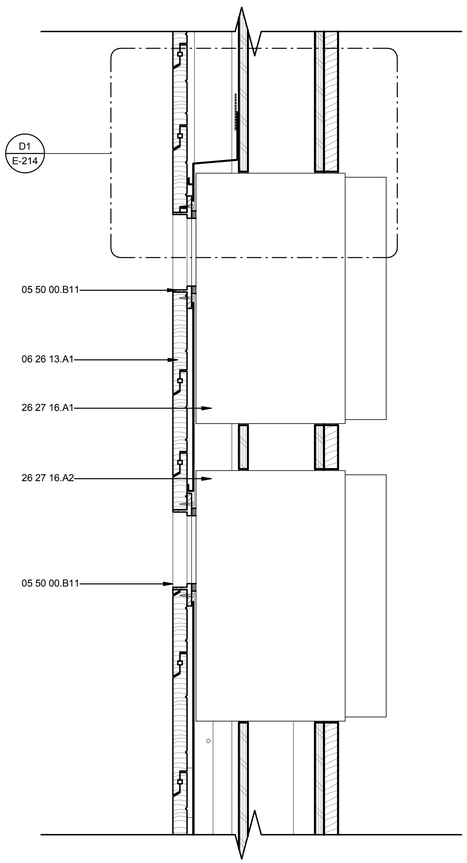

A5 METER BOX SECTION
1 : 4

0 1' 2' 4'

GENERAL SHEET NOTES

REFERENCE KEYNOTES

05 50 00.B11	ALUMINIUM FRAME IN CLADDING CUTOUT TO METER BOX WINDOW SCREW FIXED TO CLADDING THROUGH REAR FLANGE
06 16 00.A10	12MM ECOPLY LINING NAIL FIXED AT 75MM CENTRES
06 26 13.A1	PANELIZED REMOVABLE HORIZONTAL SHIPLAP CEDAR WEATHERBOARDS ON 60MM CAVITY, FIXED T 735MM MAX CRS TO ALUMINIUM CAVITY BATTENS.
06 40 23.A2	135X19MM WHITEWASHED TONGUE & GROOVE PROFILE VERTICAL TIMBER BOARD ON 45X25 TIMBER BATTENS
07 13 00.A1	HEAVY DUTY FLASHING TAPE
07 62 00.B6	CUSTOM CONTINUOUS FLASHING OVER BOTH METER BOXES. CHANNELS SET TO FALL WELDED OVER PENETRATIONS IN FLASHING TO METER BOX WINDOWS
07 92 00.A4	SINGLE SIDED 9MM ADHESIVE FOAM TAPE APPLIED TO ALUMINIUM FRAME, COMPRESSED TO 6MM AGAINST METER BOX TO FORM WATER SEAL. COLOUR BLACK.
26 27 16.A1	METER BOX HOUSING - 60HZ METER
26 27 16.A2	METER BOX HOUSING - 50HZ METER

SHEET KEYNOTES

FIRST LIGHT NZ

TEAM NAME:	FIRST LIGHT
ADDRESS:	139 VIVIAN STREET TE ARO, WELLINGTON NEWZEALAND
CONTACT:	ELINUTTALL@GMAIL.COM WWW.FIRSTLIGHTHOUSE.AC.NZ

CONSULTANTS

TENNENT + BROWN ARCHITECTS
DUNNING THORNTON CONSULTANTS LTD
LEAP AUSTRALASIA LTD
SOUTHERN PERSPECTIVES / SOLAR CITY

CLIENT
U.S. DEPARTMENT OF ENERGY
SOLAR DECATHLON 2011
WWW.SOLARDECATHLON.GOV

U.S. DEPARTMENT OF ENERGY SOLAR DECATHLON

MARK	DATE	DESCRIPTION
CN	11-01-11	FOR CONSTRUCTION

LOT NUMBER:	LOT NUMBER
DRAWN BY:	Author
CHECKED BY:	Checker
COPYRIGHT:	

SHEET TITLE
POWER METER ELEVATION

E-214

8/13/2011 8:28:55 AM

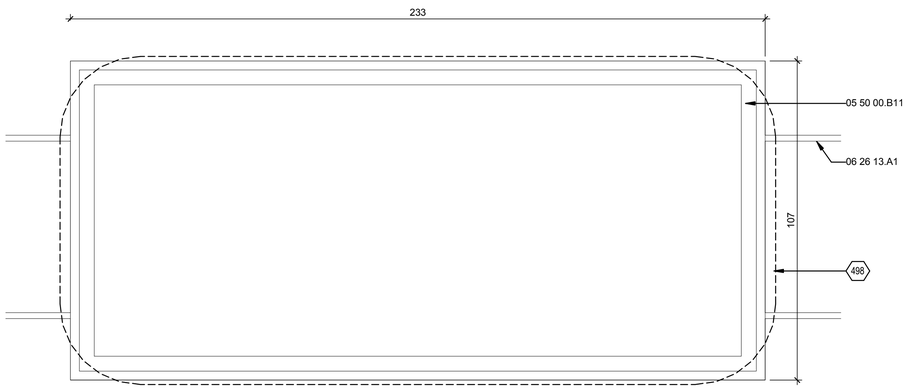

C1 METER HOUSING - DETAIL ELEVATION IN CLADDING
1 : 1

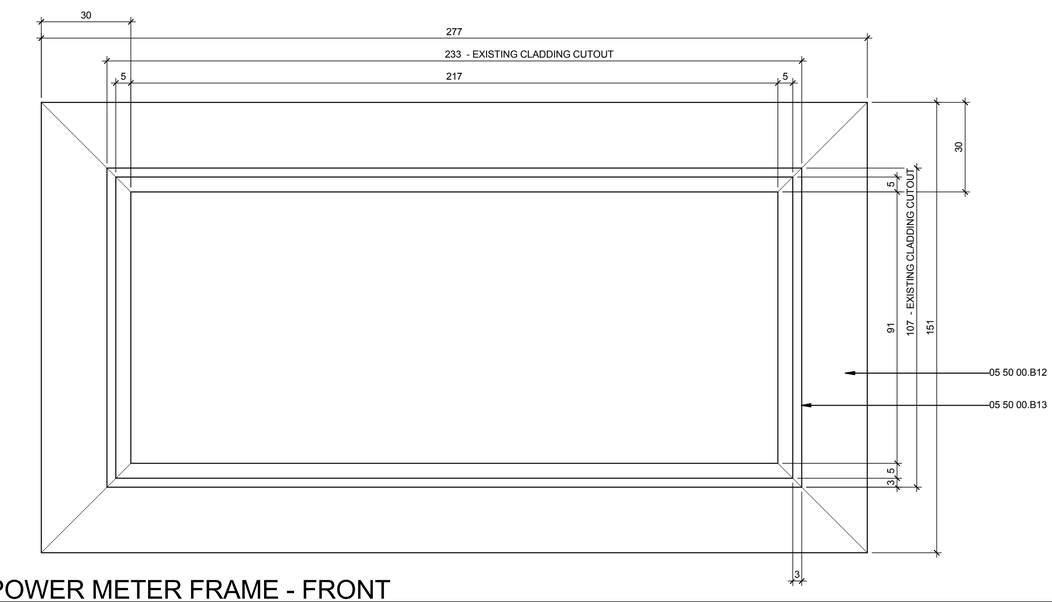

A1 POWER METER FRAME - FRONT
1 : 1

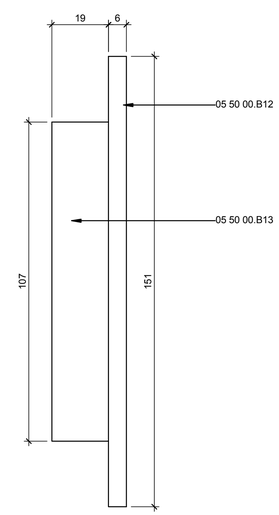

A5 POWER METER FRAME - SIDE
1 : 1

GENERAL SHEET NOTES

REFERENCE KEYNOTES

05 50 00.B11	ALUMINIUM FRAME IN CLADDING CUTOUT TO METER BOX WINDOW SCREW FIXED TO CLADDING THROUGH REAR FLANGE
05 50 00.B12	REAR FLANGE FABRICATED FROM 30 X 6MM ALUMINIUM FLAT OR SIMILAR, MITRED AT CORNERS. INVISIBLE WELD TO FRAME THROUGH CLADDING AND AT MITRES.
05 50 00.B13	FRAME THROUGH CLADDING FABRICATED FROM 3 X 19MM ALUMINIUM FLAT, MITRED AT CORNERS, TO MATCH THICKNESS OF CLADDING. INVISIBLE WELD AT MITRES AND TO REAR FLANGE.
06 26 13.A1	PANELIZED REMOVABLE HORIZONTAL SHIPLAP CEDAR WEATHERBOARDS ON 60MM CAVITY, FIXED T 735MM MAX CRS TO ALUMINIUM CAVITY BATTENS.

SHEET KEYNOTES

498	APPROXIMATE OUTLINE OF WINDOW IN METER BOX BEHIND CLADDING AND ALUMINIUM FRAME SHOWN DASHED

FIRST LIGHT NZ

TEAM NAME:	FIRST LIGHT
ADDRESS:	139 VIVIAN STREET TE ARO, WELLINGTON NEWZEALAND
CONTACT:	ELINUTTALL@GMAIL.COM WWW.FIRSTLIGHTHOUSE.AC.NZ

CONSULTANTS

TENNENT + BROWN ARCHITECTS
DUNNING THORNTON CONSULTANTS LTD
LEAP AUSTRALASIA LTD
SOUTHERN PERSPECTIVES / SOLAR CITY

CLIENT

U.S. DEPARTMENT OF ENERGY
SOLAR DECATHLON 2011
WWW.SOLARDECATHLON.GOV

U.S. DEPARTMENT OF ENERGY SOLAR DECATHLON

MARK	DATE	DESCRIPTION
CN	11-01-11	FOR CONSTRUCTION

LOT NUMBER:	LOT NUMBER
DRAWN BY:	Author
CHECKED BY:	Checker
COPYRIGHT:	

SHEET TITLE

POWER METER FRAME FABRICATION DETAILS

E-215

8/13/2011 8:28:59 AM

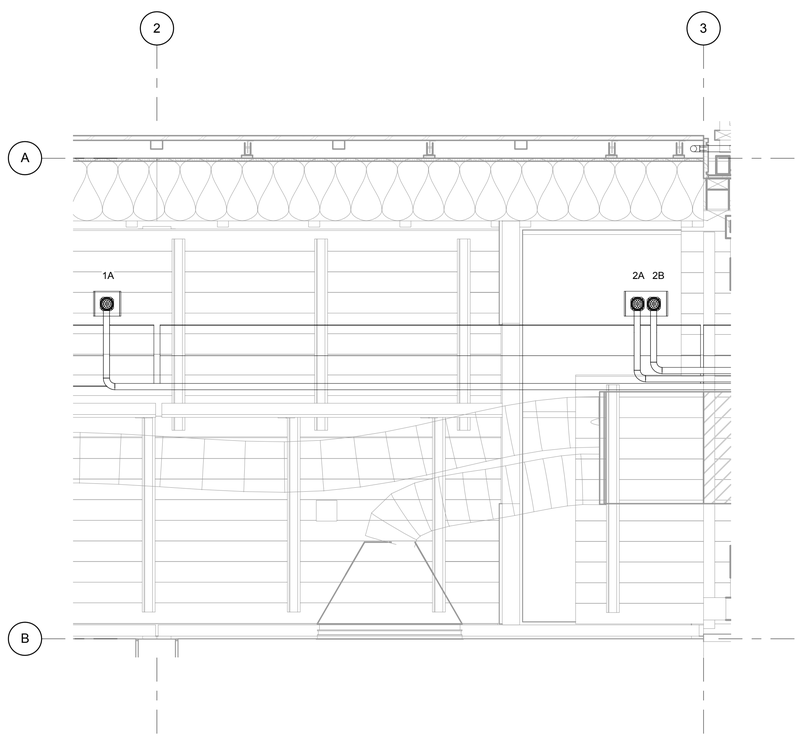

A1 ELECTRICAL CONECTIONS - MODULE 1 & 2
1 : 12

0 1/2' 1' 2'

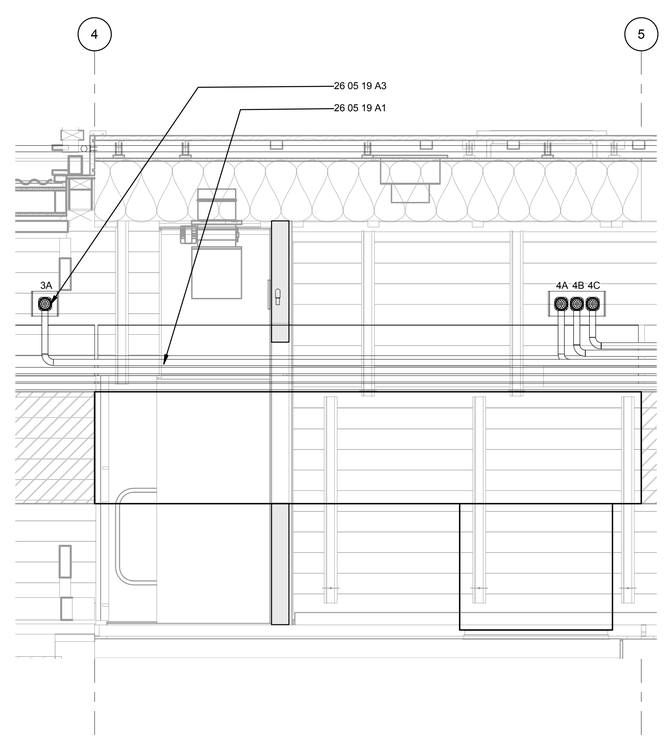

A4 ELECTRICAL CONECTIONS - MODULE 3 & 4
1 : 12

0 1/2' 1' 2'

GENERAL SHEET NOTES

REFERENCE KEYNOTES

26 05 19 A1	25 CORE, 2.5MM2 (AWG 14) OFLEX CLASSIC 130H MULTICORE CABLE
26 05 19 A3	19 PIN SOCAPEX FEMALE CONNECTOR

SHEET KEYNOTES

FIRST LIGHT NZ

TEAM NAME:	FIRST LIGHT
ADDRESS:	139 VIVIAN STREET TE ARO, WELLINGTON NEWZEALAND
CONTACT:	ELINUTTALL@GMAIL.COM WWW.FIRSTLIGHTHOUSE.AC.NZ

CONSULTANTS

TENNENT + BROWN ARCHITECTS
DUNNING THORNTON CONSULTANTS LTD
LEAP AUSTRALASIA LTD
SOUTHERN PERSPECTIVES / SOLAR CITY

CLIENT
U.S. DEPARTMENT OF ENERGY
SOLAR DECATHLON 2011
WWW.SOLARDECATHLON.GOV

U.S. DEPARTMENT OF ENERGY SOLAR DECATHLON

MARK	DATE	DESCRIPTION
CN	11-01-11	FOR CONSTRUCTION

LOT NUMBER:	LOT NUMBER
DRAWN BY:	Author
CHECKED BY:	Checker
COPYRIGHT:	

SHEET TITLE
ELECTRICAL MODULE CONNECTION DETAIL

E-400

8/13/2011 8:29:06 AM

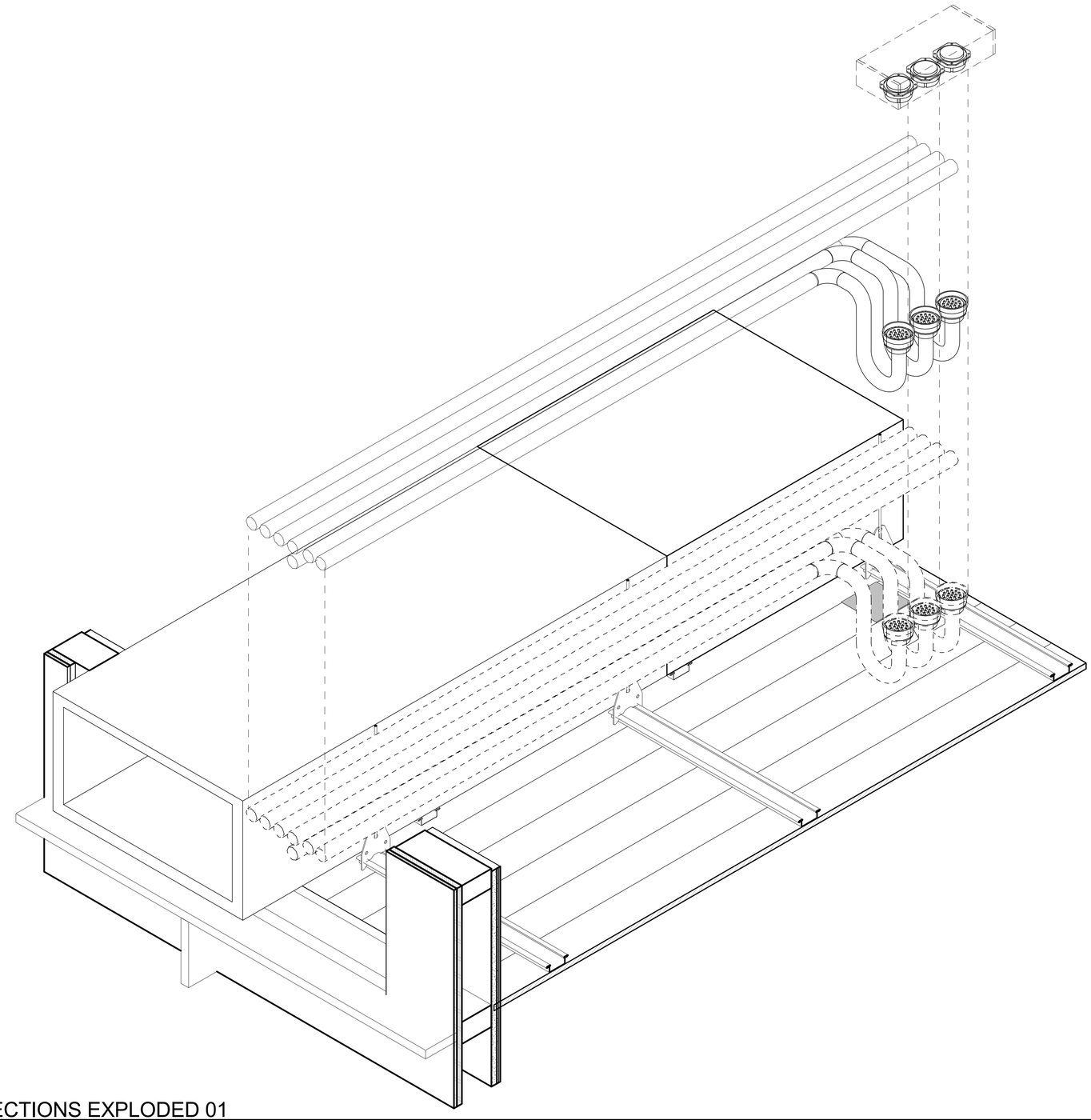

A1 ELECTRICAL CONNECTIONS EXPLODED 01

GENERAL SHEET NOTES

REFERENCE KEYNOTES

SHEET KEYNOTES

FIRST LIGHT NZ

TEAM NAME:	FIRST LIGHT
ADDRESS:	139 VIVIAN STREET TE ARO, WELLINGTON NEWZEALAND
CONTACT:	ELINUTTALL@GMAIL.COM WWW.FIRSTLIGHTHOUSE.AC.NZ

CONSULTANTS

TENNENT + BROWN ARCHITECTS
DUNNING THORNTON CONSULTANTS LTD
LEAP AUSTRALASIA LTD
SOUTHERN PERSPECTIVES / SOLAR CITY

CLIENT

U.S. DEPARTMENT OF ENERGY
SOLAR DECATHLON 2011
WWW.SOLARDECATHLON.GOV

U.S. DEPARTMENT OF ENERGY SOLAR DECATHLON

MARK	DATE	DESCRIPTION
CN	11-01-11	FOR CONSTRUCTION

LOT NUMBER:	LOT NUMBER
DRAWN BY:	Author
CHECKED BY:	Checker
COPYRIGHT:	

SHEET TITLE

ELECTRICAL MODULE CONNECTION ISOMETRIC

E-401

8/13/2011 8:29:11 AM

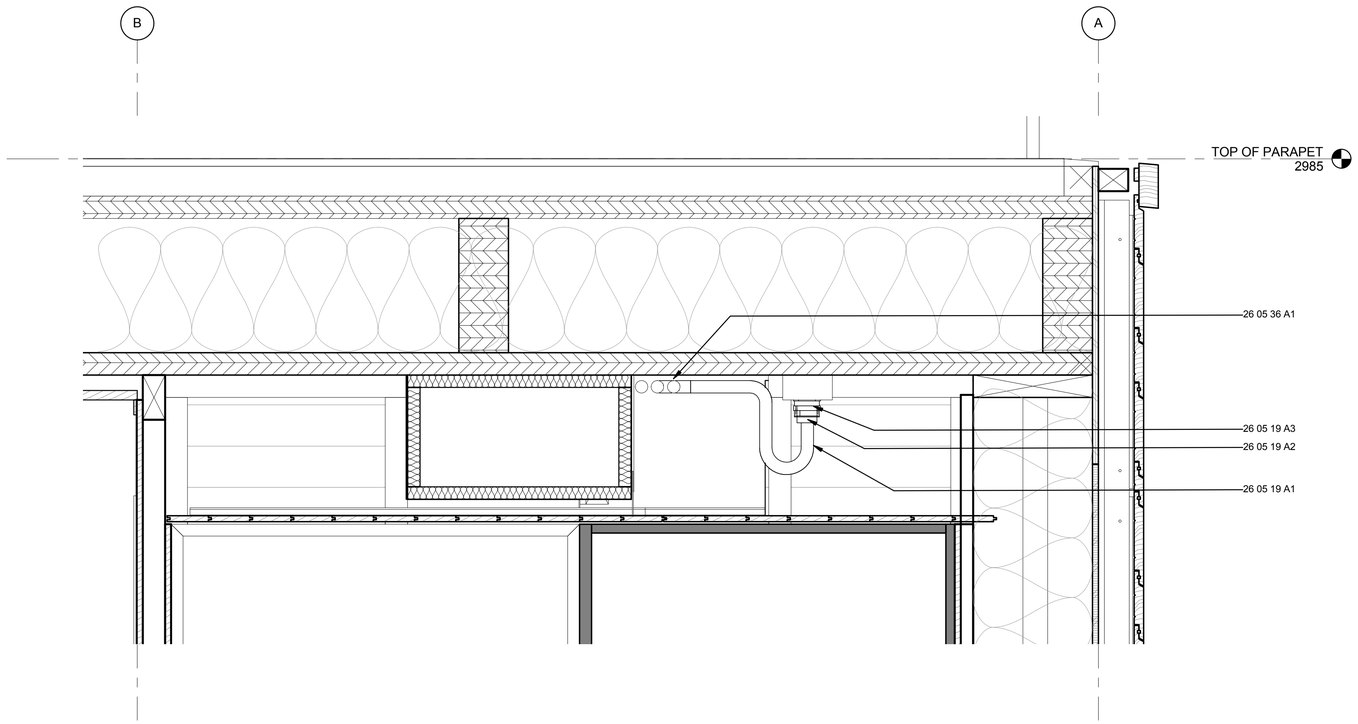

A2 ELECTRICAL MODULE CONNECTION DETAIL
1 : 6

GENERAL SHEET NOTES

REFERENCE KEYNOTES

26 05 19 A1	25 CORE, 2.5MM2 (AWG 14) OFLEX CLASSIC 130H MULTICORE CABLE
26 05 19 A2	19 PIN SOCAPEX MALE CONNECTOR
26 05 19 A3	19 PIN SOCAPEX FEMALE CONNECTOR
26 05 36 A1	200MM X 30MM UNISTRUT BASKET TRAY

SHEET KEYNOTES

FIRST LIGHT NZ

TEAM NAME:	FIRST LIGHT
ADDRESS:	139 VIVIAN STREET TE ARO, WELLINGTON NEWZEALAND
CONTACT:	ELINUTTALL@GMAIL.COM WWW.FIRSTLIGHTHOUSE.AC.NZ

CONSULTANTS

TENNENT + BROWN ARCHITECTS
DUNNING THORNTON CONSULTANTS LTD
LEAP AUSTRALASIA LTD
SOUTHERN PERSPECTIVES / SOLAR CITY

CLIENT

U.S. DEPARTMENT OF ENERGY
SOLAR DECATHLON 2011
WWW.SOLARDECATHLON.GOV

U.S. DEPARTMENT OF ENERGY SOLAR DECATHLON

MARK	DATE	DESCRIPTION
CN	11-01-11	FOR CONSTRUCTION

LOT NUMBER:	LOT NUMBER
DRAWN BY:	Author
CHECKED BY:	Checker
COPYRIGHT:	

SHEET TITLE

ELECTRICAL CONNECTION DETAIL

E-402

8/13/2011 8:29:16 AM

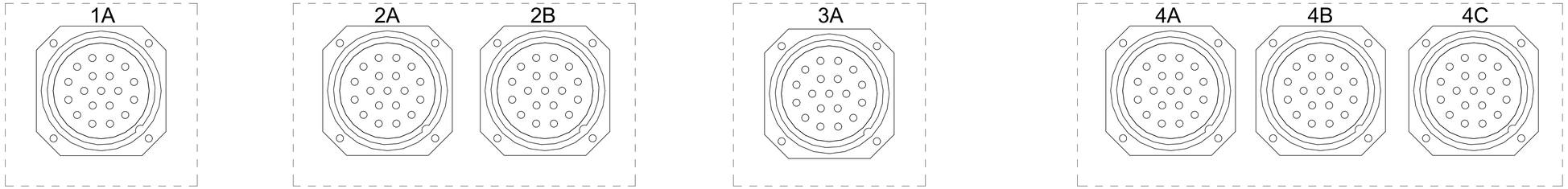

MODULE 1 MODULE 2 MODULE 3 MODULE 4

ELECTRICAL JOINS

MODULE PLUG	PIN NUMBER	SUB BRANCH CIRCUIT	WIRE TYPE	CIRCUIT
1-A	1	LIVING ROOM LIGHTS	PHASE	2 - INTERIOR LIGHTING 1
1-A	2	LIVING ROOM LIGHTS	NEUTRAL	2 - INTERIOR LIGHTING 1
1-A	2	ENTERTAINMENT	NEUTRAL	5 - ENTERTAINMENT
1-A	3	ENTERTAINMENT	NEUTRAL	5 - ENTERTAINMENT
1-A	4	LIVING ROOM LIGHT OUTLETS	PHASE	6 - MISC
1-A	5	LIVING ROOM LIGHT OUTLETS	NEUTRAL	6 - MISC
1-A	6	LIVING ROOM LIGHT SWITCH	RETURN	CONTROLS
1-A	7	LIVING ROOM LIGHT SWITCH	PHASE	CONTROLS
1-A	8	FIRE	PHASE	21 - FIRE SAFTEY
1-A	9	FIRE	NEUTRAL	21 - FIRE SAFTEY
1-A	10			
1-A	11			
1-A	12			
1-A	13	LIVING ROOM LIGHTS	EARTH	2 - INTERIOR LIGHTING 1
1-A	14	ENTERTAINMENT	EARTH	5 - ENTERTAINMENT
1-A	15	LIVING ROOM OUTLETS	EARTH	6 - MISC
1-A	16	FIRE	EARTH	21 - FIRE SAFTEY
1-A	17		EARTH SPARES	
1-A	18		EARTH SPARES	
1-A	19		EARTH SPARES	
2-A	1	LIVING ROOM LIGHTS	PHASE	2 - INTERIOR LIGHTING 1
2-A	2	LIVING ROOM LIGHTS	NEUTRAL	2 - INTERIOR LIGHTING 1
2-A	2	KITCHEN LIGHTS	NEUTRAL	2 - INTERIOR LIGHTING 1
2-A	3	KITCHEN LIGHTS	PHASE	2 - INTERIOR LIGHTING 1
2-A	4	LIVING ROOM OUTLETS	PHASE	6 - MISC
2-A	5	LIVING ROOM OUTLETS	NEUTRAL	6 - MISC
2-A	6	KITCHEN OUTLETS	PHASE	8 - KITCHEN
2-A	7	KITCHEN OUTLETS	NEUTRAL	8 - KITCHEN
2-A	8	FRIDGE	PHASE	12 - FRIDGE
2-A	9	FRIDGE	NEUTRAL	12 - FRIDGE
2-A	10	OUTDOOR OUTLET	PHASE	20 - SHED OUTLETS
2-A	11	OUTDOOR OUTLET	NEUTRAL	20 - SHED OUTLETS
2-A	12			
2-A	13	LIVING ROOM LIGHTS	EARTH	2 - INTERIOR LIGHTING 1
2-A	14	KITCHEN LIGHTS	EARTH	8 - KITCHEN
2-A	15	LIVING ROOM OUTLETS	EARTH	6 - MISC
2-A	16	KITCHEN OUTLETS	EARTH	8 - KITCHEN
2-A	17	FRIDGE	EARTH	12 - FRIDGE
2-A	18	OUTDOOR OUTLET	EARTH	20 - SHED OUTLETS
2-A	19		EARTH SPARES	
2-B	1	LIVING ROOM LIGHT SWITCH	RETURN	CONTROLS
2-B	2	LIVING ROOM LIGHT SWITCH	PHASE	CONTROLS
2-B	3	KITCHEN LIGHTS SWITCH	RETURN	CONTROLS
2-B	4	KITCHEN LIGHTS SWITCH	PHASE	CONTROLS
2-B	5	DINING ROOM LIGHT SWITCH	RETURN	CONTROLS
2-B	6	DINING ROOM LIGHT SWITCH	PHASE	CONTROLS
2-B	7	EXTERIOR LIGHTS SWITCH	RETURN	CONTROLS
2-B	8	EXTERIOR LIGHTS SWITCH	PHASE	CONTROLS
2-B	9	LIGHTS MASTER SWITCH OFF	RETURN	CONTROLS
2-B	10	LIGHTS MASTER SWITCH OFF	PHASE	CONTROLS
2-B	11			
2-B	12			
2-B	13		EARTH SPARES	
2-B	14		EARTH SPARES	
2-B	15		EARTH SPARES	
2-B	16		EARTH SPARES	
2-B	17		EARTH SPARES	
2-B	18		EARTH SPARES	
2-B	19		EARTH SPARES	

ELECTRICAL JOINS

MODULE PLUG	PIN NUMBER	SUB BRANCH CIRCUIT	WIRE TYPE	CIRCUIT
3-A	1	DINING ROOM OUTLETS	PHASE	8 - KITCHEN
3-A	2	DINING ROOM OUTLETS	NEUTRAL	8 - KITCHEN
3-A	3	DINING ROOM LIGHTS	PHASE	2 - INTERIOR LIGHTING 1
3-A	4	DINING ROOM LIGHTS	NEUTRAL	2 - INTERIOR LIGHTING 1
3-A	5	KITCHEN LIGHTS	PHASE	2 - INTERIOR LIGHTING 1
3-A	6	KITCHEN LIGHTS	NEUTRAL	2 - INTERIOR LIGHTING 1
3-A	7	SHADING		14 - SHADING
3-A	8	SHADING		14 - SHADING
3-A	9			
3-A	10			
3-A	11			
3-A	12			
3-A	13	DINING ROOM OUTLETS	EARTH	8 - KITCHEN
3-A	14	DINING ROOM LIGHTS	EARTH	2 - INTERIOR LIGHTING 1
3-A	15	KITCHEN LIGHTS	EARTH	2 - INTERIOR LIGHTING 1
3-A	16	SHADING	EARTH	14 - SHADING
3-A	17		EARTH SPARES	
3-A	18		EARTH SPARES	
3-A	19		EARTH SPARES	
4-A	1	KITCHEN LIGHTS	PHASE	2 - INTERIOR LIGHTING 1
4-A	2	KITCHEN LIGHTS	NEUTRAL	2 - INTERIOR LIGHTING 1
4-A	3	STUDY LIGHTS 1	NEUTRAL	3 - INTERIOR LIGHTING 2
4-A	3	STUDY LIGHTS 2	NEUTRAL	3 - INTERIOR LIGHTING 2
4-A	3	BATHROOM LIGHTS	NEUTRAL	3 - INTERIOR LIGHTING 2
4-A	4	STUDY LIGHTS 1	PHASE	3 - INTERIOR LIGHTING 2
4-A	5	STUDY LIGHTS 2	PHASE	3 - INTERIOR LIGHTING 2
4-A	6	BATHROOM LIGHTS	PHASE	3 - INTERIOR LIGHTING 2
4-A	7	STUDY	PHASE	4 - STUDY
4-A	8	STUDY	NEUTRAL	4 - STUDY
4-A	9	BATHROOM OUTLETS	PHASE	7 - BATHROOM
4-A	10	BATHROOM OUTLETS	NEUTRAL	7 - BATHROOM
4-A	11	KITCHEN OUTLETS	PHASE	8 - KITCHEN
4-A	12	KITCHEN OUTLETS	NEUTRAL	8 - KITCHEN
4-A	13	KITCHEN LIGHTS	EARTH	2 - INTERIOR LIGHTING 1
4-A	14	STUDY LIGHTS 1	EARTH	3 - INTERIOR LIGHTING 2
4-A	15	STUDY LIGHTS 2	EARTH	3 - INTERIOR LIGHTING 2
4-A	16	BATHROOM LIGHTS	EARTH	3 - INTERIOR LIGHTING 2
4-A	17	STUDY	EARTH	4 - STUDY
4-A	18	BATHROOM OUTLETS	EARTH	7 - BATHROOM
4-A	19	KITCHEN OUTLETS	EARTH	8 - KITCHEN

ELECTRICAL JOINS

MODULE PLUG	PIN NUMBER	SUB BRANCH CIRCUIT	WIRE TYPE	CIRCUIT
4-B	1	DISHWASHER	PHASE	9 - DISHWASHER
4-B	2	DISHWASHER	NEUTRAL	9 - DISHWASHER
4-B	3	OVEN	PHASE	10 - OVEN
4-B	4	OVEN	NEUTRAL	10 - OVEN
4-B	5	HOB/RANGEHOOD	PHASE	11 - HOB/RANGEHOOD
4-B	6	HOB/RANGEHOOD	NEUTRAL	11 - HOB/RANGEHOOD
4-B	7	CONTROL (BMS)	PHASE	13 - BMS
4-B	8	CONTROL (BMS)	NEUTRAL	13 - BMS
4-B	9	BATHROOM FAN	PHASE	18 - VENTILATION
4-B	10	BATHROOM FAN	NEUTRAL	18 - VENTILATION
4-B	11	WINDOW OUTLETS	PHASE	6 - MISC
4-B	12	WINDOW OUTLETS	NEUTRAL	6 - MISC
4-B	13	DISHWASHER	EARTH	9 - DISHWASHER
4-B	14	OVEN	EARTH	10 - OVEN
4-B	15	HOB/RANGEHOOD	EARTH	11 - HOB/RANGEHOOD
4-B	16	CONTROL (BMS)	EARTH	13 - BMS
4-B	17	BATHROOM FAN	EARTH	18 - VENTILATION
4-B	18	WINDOW OUTLETS	EARTH	6 - MISC
4-B	19		EARTH SPARES	
4-C	1	STUDY LIGHTS SWITCH 1	PHASE	CONTROLS
4-C	1	STUDY LIGHTS SWITCH 2	PHASE	CONTROLS
4-C	1	BATHROOM LIGHTS	PHASE	CONTROLS
4-C	1	BEDROOM LIGHTS SWITCH	PHASE	CONTROLS
4-C	2	STUDY LIGHTS SWITCH 1	RETURN	CONTROLS
4-C	3	STUDY LIGHTS SWITCH 2	RETURN	CONTROLS
4-C	4	BATHROOM LIGHTS	RETURN	CONTROLS
4-C	5	BEDROOM LIGHTS SWITCH	RETURN	CONTROLS
4-C	6	OVEN SWITCH	PHASE	CONTROLS
4-C	7	OVEN SWITCH	RETURN	CONTROLS
4-C	8	HOB/RANGEHOOD SWITCH	PHASE	CONTROLS
4-C	9	HOB/RANGEHOOD SWITCH	RETURN	CONTROLS
4-C	10	DISHWASHER SWITCH	PHASE	CONTROLS
4-C	11	DISHWASHER SWITCH	RETURN	CONTROLS
4-C	12			
4-C	13		EARTH SPARES	
4-C	14		EARTH SPARES	
4-C	15		EARTH SPARES	
4-C	16		EARTH SPARES	
4-C	17		EARTH SPARES	
4-C	18		EARTH SPARES	
4-C	19		EARTH SPARES	

FIRST LIGHT NZ

TEAM NAME: FIRST LIGHT
ADDRESS: 139 VIVIAN STREET TE ARO, WELLINGTON NEWZEALAND
CONTACT: ELINUTTALL@GMAIL.COM WWW.FIRSTLIGHTHOUSE.AC.NZ

CONSULTANTS

TENNENT + BROWN ARCHITECTS
DUNNING THORNTON CONSULTANTS LTD
LEAP AUSTRALASIA LTD
SOUTHERN PERSPECTIVES / SOLAR CITY

CLIENT

U.S. DEPARTMENT OF ENERGY
SOLAR DECATHLON 2011
WWW.SOLARDECATHLON.GOV

U.S. DEPARTMENT OF ENERGY SOLAR DECATHLON

MARK	DATE	DESCRIPTION
CN	11-01-11	FOR CONSTRUCTION

LOT NUMBER: LOT NUMBER
DRAWN BY: Author
CHECKED BY: Checker
COPYRIGHT:

SHEET TITLE

CONNECTORS SCHEDULE

E-403

8/13/2011 8:29:20 AM

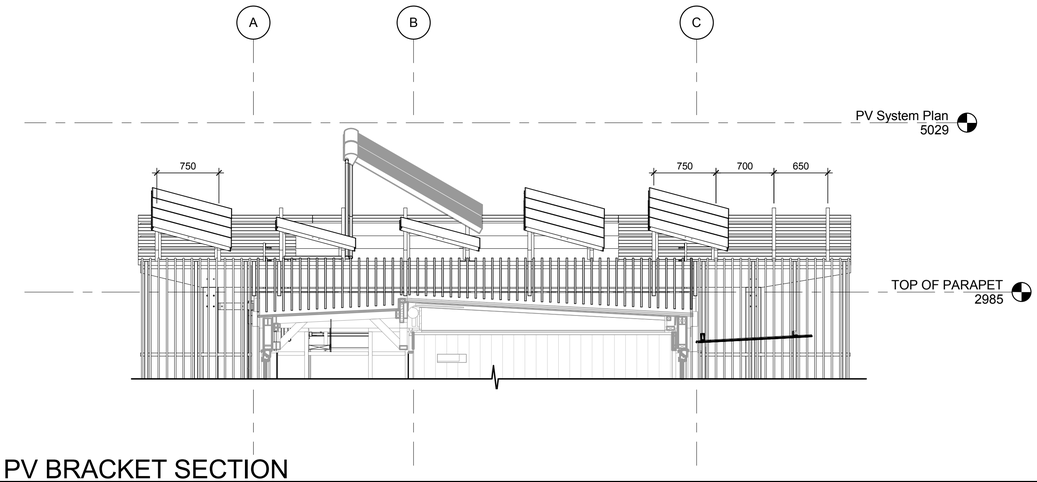

D1 PV BRACKET SECTION
1 : 36

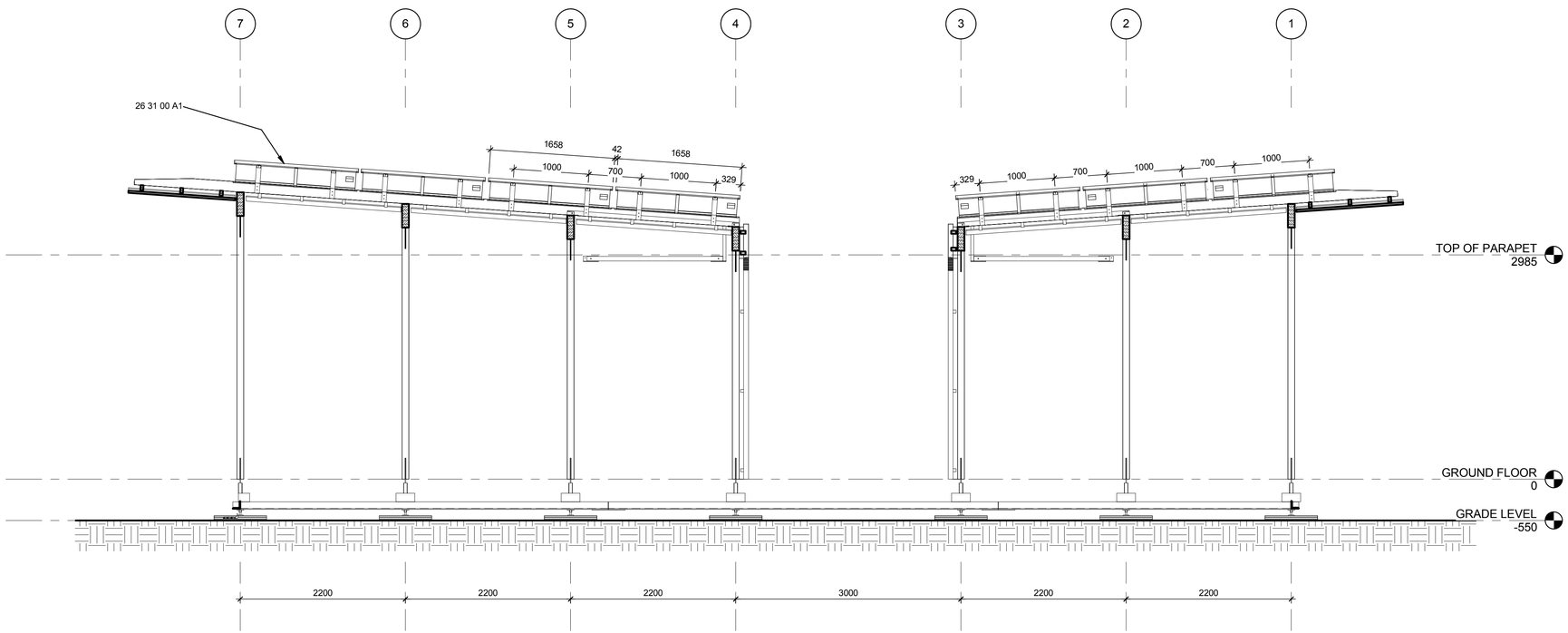

A1 PV CANOPY SECTION
1 : 36

0 3" 6" 1'

GENERAL SHEET NOTES

REFERENCE KEYNOTES

26 31 00 A1	225W MITSUBISHI PHOTOVOLTAIC COLLECTORS

SHEET KEYNOTES

FIRST LIGHT NZ

TEAM NAME:	FIRST LIGHT
ADDRESS:	139 VIVIAN STREET TE ARO, WELLINGTON NEWZEALAND
CONTACT:	ELINUTTALL@GMAIL.COM WWW.FIRSTLIGHTHOUSE.AC.NZ

CONSULTANTS

TENNENT + BROWN ARCHITECTS
DUNNING THORNTON CONSULTANTS LTD
LEAP AUSTRALASIA LTD
SOUTHERN PERSPECTIVES / SOLAR CITY

CLIENT
U.S. DEPARTMENT OF ENERGY
SOLAR DECATHLON 2011
WWW.SOLARDECATHLON.GOV

U.S. DEPARTMENT OF ENERGY SOLAR DECATHLON

MARK	DATE	DESCRIPTION
CN	11-01-11	FOR CONSTRUCTION

LOT NUMBER:	LOT NUMBER
DRAWN BY:	Author
CHECKED BY:	Checker
COPYRIGHT:	

SHEET TITLE
PV BRACKET SECTION

E-410

8/13/2011 8:29:30 AM

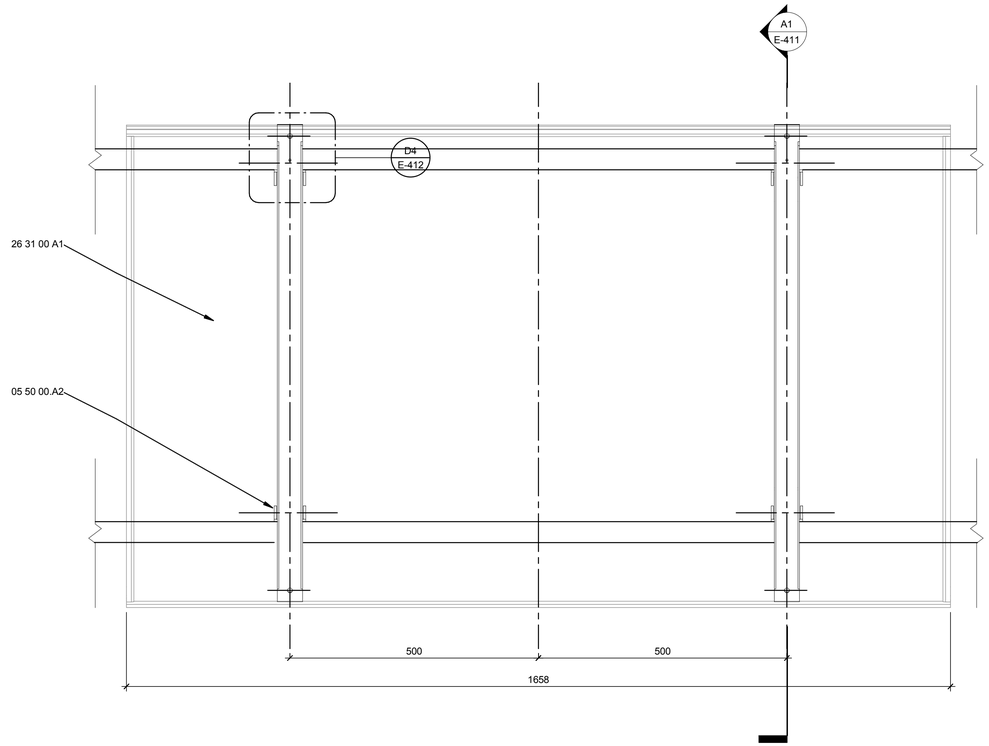

C3 PV BRACKETS PLAN
1 : 6

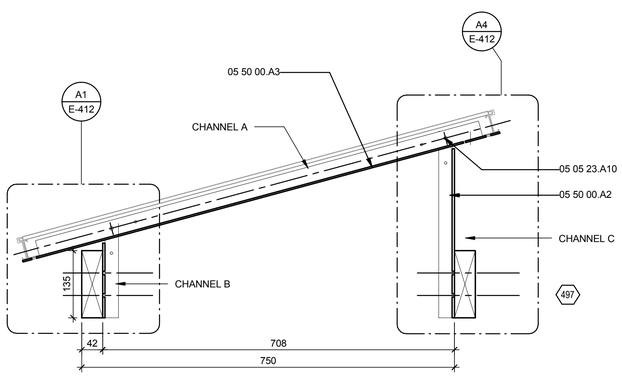

A1 PV BRACKETS SECTION
1 : 6

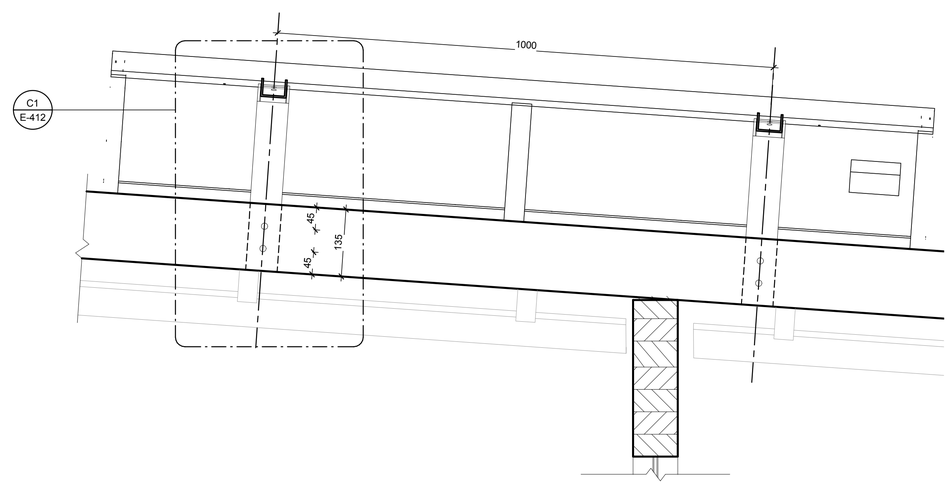

A3 PV BRACKET ELEVATION
1 : 6

GENERAL SHEET NOTES

REFERENCE KEYNOTES

05 05 23.A10	M6 BOLTS
05 50 00.A2	63.5X31.75X4.763MM UA ALUMINIUM CHANNEL
05 50 00.A3	50.8X34.92X3.175MM UA ALUMINIUM CHANNEL
26 31 00 A1	225W MITSUBISHI PHOTOVOLTAIC COLLECTORS

SHEET KEYNOTES

497	14G SCREW T17

FIRST LIGHT NZ

TEAM NAME:	FIRST LIGHT
ADDRESS:	139 VIVIAN STREET TE ARO, WELLINGTON NEWZEALAND
CONTACT:	ELINUTTALL@GMAIL.COM WWW.FIRSTLIGHTHOUSE.AC.NZ

CONSULTANTS

TENNENT + BROWN ARCHITECTS
DUNNING THORNTON CONSULTANTS LTD
LEAP AUSTRALASIA LTD
SOUTHERN PERSPECTIVES / SOLAR CITY

CLIENT

U.S. DEPARTMENT OF ENERGY
SOLAR DECATHLON 2011
WWW.SOLARDECATHLON.GOV

U.S. DEPARTMENT OF ENERGY SOLAR DECATHLON

MARK	DATE	DESCRIPTION
CN	11-01-11	FOR CONSTRUCTION

LOT NUMBER:	LOT NUMBER
DRAWN BY:	Author
CHECKED BY:	Checker
COPYRIGHT:	

SHEET TITLE

PV BRACKET DETAILS 01

E-411

8/13/2011 8:29:35 AM

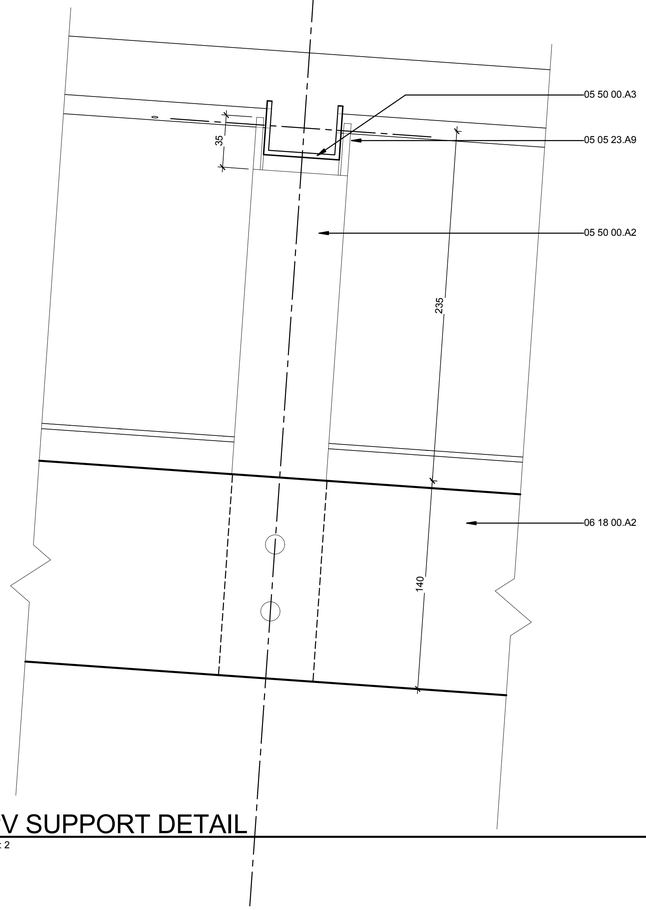

C1 PV SUPPORT DETAIL
1 : 2

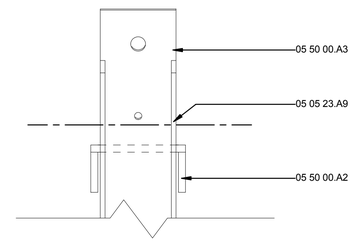

D4 BRACKET END DETAIL
1 : 2

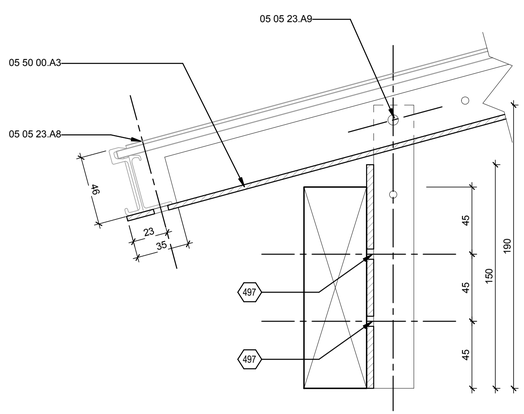

A1 PV BRACKET DETAIL
1 : 2

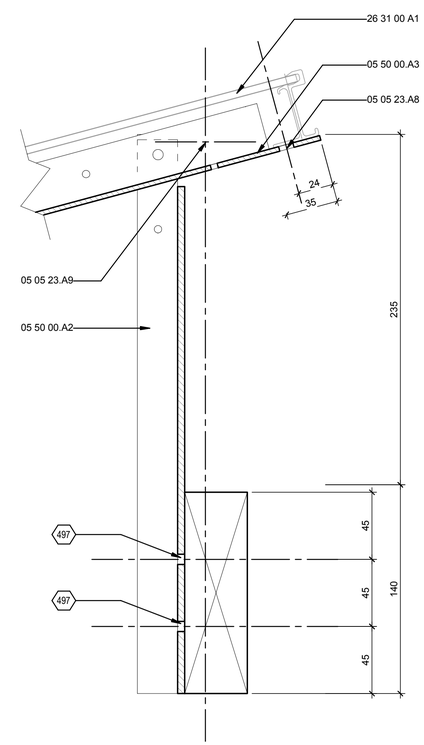

A4 BRACKET DETAIL
1 : 2

GENERAL SHEET NOTES

REFERENCE KEYNOTES

05 05 23.A8	M8 STAINLESS STEEL BOLT TO ATTACH PV MODULE FRAME TO ALUMINIUM CHANNEL
05 05 23.A9	6MM BOLT WITH 2 X 1.5MM WASHERS ON EITHER SIDE OF 50.8 CHANNEL
05 50 00.A2	63.5X31.75X4.763MM UA ALUMINIUM CHANNEL
05 50 00.A3	50.8X34.92X3.175MM UA ALUMINIUM CHANNEL
06 18 00.A2	135X42MM GLULAM GL8 RAFTERS AT 750MM NOM. CENTRES SPANNIG FULL LENGTH OF CANOPY, TAPERING TO 70X42MM @ CANTILEVERED END. REFER FABRICATION DRAWINGS.
26 31 00 A1	225W MITSUBISHI PHOTOVOLTAIC COLLECTORS

SHEET KEYNOTES

497	14G SCREW T17

FIRST LIGHT NZ

TEAM NAME:	FIRST LIGHT
ADDRESS:	139 VIVIAN STREET TE ARO, WELLINGTON NEWZEALAND
CONTACT:	ELINUTTALL@GMAIL.COM WWW.FIRSTLIGHTHOUSE.AC.NZ

CONSULTANTS

TENNENT + BROWN ARCHITECTS
DUNNING THORNTON CONSULTANTS LTD
LEAP AUSTRALASIA LTD
SOUTHERN PERSPECTIVES / SOLAR CITY

CLIENT
U.S. DEPARTMENT OF ENERGY
SOLAR DECATHLON 2011
WWW.SOLARDECATHLON.GOV

U.S. DEPARTMENT OF ENERGY SOLAR DECATHLON

MARK	DATE	DESCRIPTION
CN	11-01-11	FOR CONSTRUCTION

LOT NUMBER:	LOT NUMBER
DRAWN BY:	Author
CHECKED BY:	Checker
COPYRIGHT:	

SHEET TITLE
PV BRACKET DETAILS 02

E-412

8/13/2011 8:29:41 AM

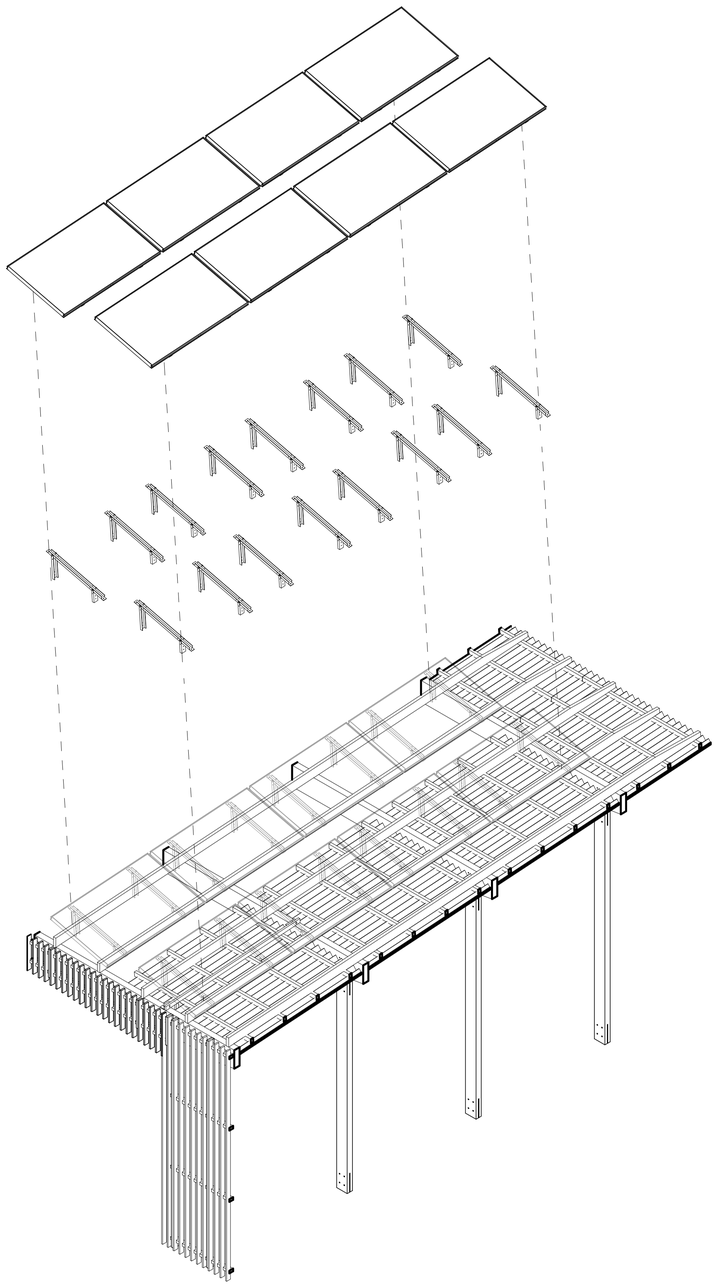

A1 PV ISOMETRIC

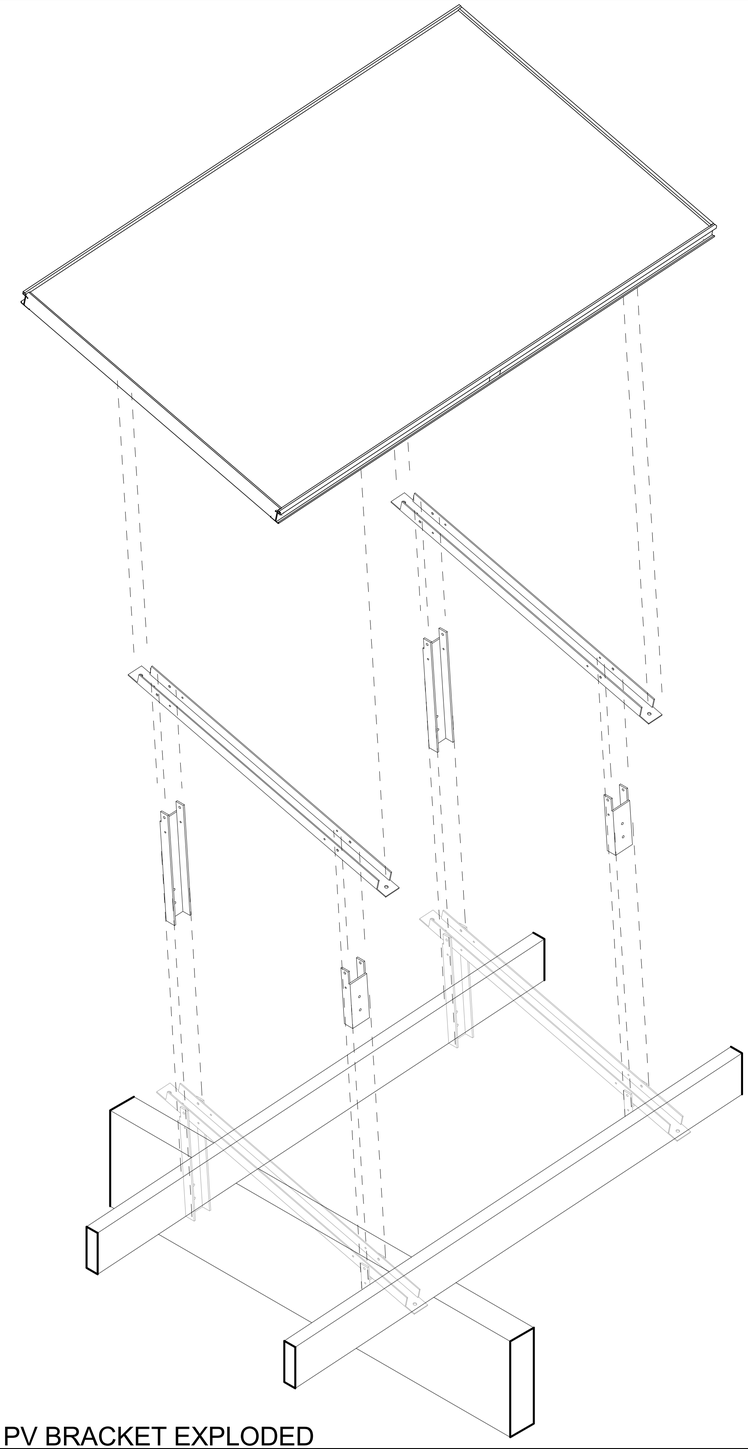

A4 PV BRACKET EXPLODED

GENERAL SHEET NOTES

REFERENCE KEYNOTES

SHEET KEYNOTES

FIRST LIGHT NZ

TEAM NAME:	FIRST LIGHT
ADDRESS:	139 VIVIAN STREET TE ARO, WELLINGTON NEWZEALAND
CONTACT:	ELINUTTALL@GMAIL.COM WWW.FIRSTLIGHTHOUSE.AC.NZ

CONSULTANTS

TENNENT + BROWN ARCHITECTS
DUNNING THORNTON CONSULTANTS LTD
LEAP AUSTRALASIA LTD
SOUTHERN PERSPECTIVES / SOLAR CITY

CLIENT

U.S. DEPARTMENT OF ENERGY
SOLAR DECATHLON 2011
WWW.SOLARDECATHLON.GOV

U.S. DEPARTMENT OF ENERGY SOLAR DECATHLON

MARK	DATE	DESCRIPTION
CN	11-01-11	FOR CONSTRUCTION
A	06-04-11	REVISION A

LOT NUMBER:	LOT NUMBER
DRAWN BY:	Author
CHECKED BY:	Checker
COPYRIGHT:	

SHEET TITLE

PV BRACKET ISOMETRIC

E-414

8/13/2011 8:29:50 AM

Load Calcs

Circuit	Circut Name	Load Name	Qty	Volts	Amps	Watts	Total Watts	Circuit Breaker Rating			Wire Rating
1	Exterior Lighting	TOTAL	3	220	0.1	5	15	10	PASS	25	PASS
2	Interior Lights 1	Watts/m2	70	220	10.5	33	2310	16	PASS	25	PASS
3	Interior Lights 1	Watts/m2	70	220	10.5	33	2310	16	PASS	25	PASS
4	Study	TOTAL	1	220	0.8	180	180	20	PASS	25	PASS
5	Entertainment	TOTAL	4	220	1.6	90	360	16	PASS	25	PASS
6	Misc	TOTAL	20	220	8.2	90	1800	20	PASS	25	PASS
7	Bathroom	TOTAL	1	220	0.8	180	180	16	PASS	25	PASS
8	Kitchen	TOTAL	8	220	3.3	90	720	20	PASS	25	PASS
9	Oven	TOTAL	1	220	12.7	2800	2800	20	PASS	25	PASS
10	Hob/Rangehood	TOTAL	1	220	15.0	3300	3300	16	PASS	25	PASS
11	Dishwasher	TOTAL	1	220	5.0	1100	1100	10	PASS	25	PASS
12	Fridge	TOTAL	1	220	1.8	400	400	10	PASS	25	PASS
13	BMS	TOTAL	10	220	4.5	100	1000				
14	Shading	TOTAL	1	220	6.8	1500	1500	10	PASS	25	PASS
15	Washing Machine	TOTAL	1	220	6.8	1500	1500	10	PASS	25	PASS
16	Hydronic Dryer	TOTAL	1	220	0.8	180	180	10	PASS	25	PASS
17	Hot Water	TOTAL	1	220	9.0	1980	1980	10	PASS	25	PASS
	Heat Pump		1	220	8.2	1800	1800				
	Pump and controls		1	220	0.8	180	180				
18	Ventilation	TOTAL	1	220	0.8	180	180	16	PASS	25	PASS
19	Heat Pump	TOTAL	1	220	17.6	2970.0	3870.0	32	PASS	25	PASS
	Indoor Unit		1	220	1.8	390	390				
	Outdoor unit 1			220	11.3	2480	2480				
20	Outdoor	TOTAL	1	220	10.0	2200	2200	20	PASS	25	PASS
21	Fire	TOTAL	1	220	10.0	2200	2200	16	PASS	25	PASS

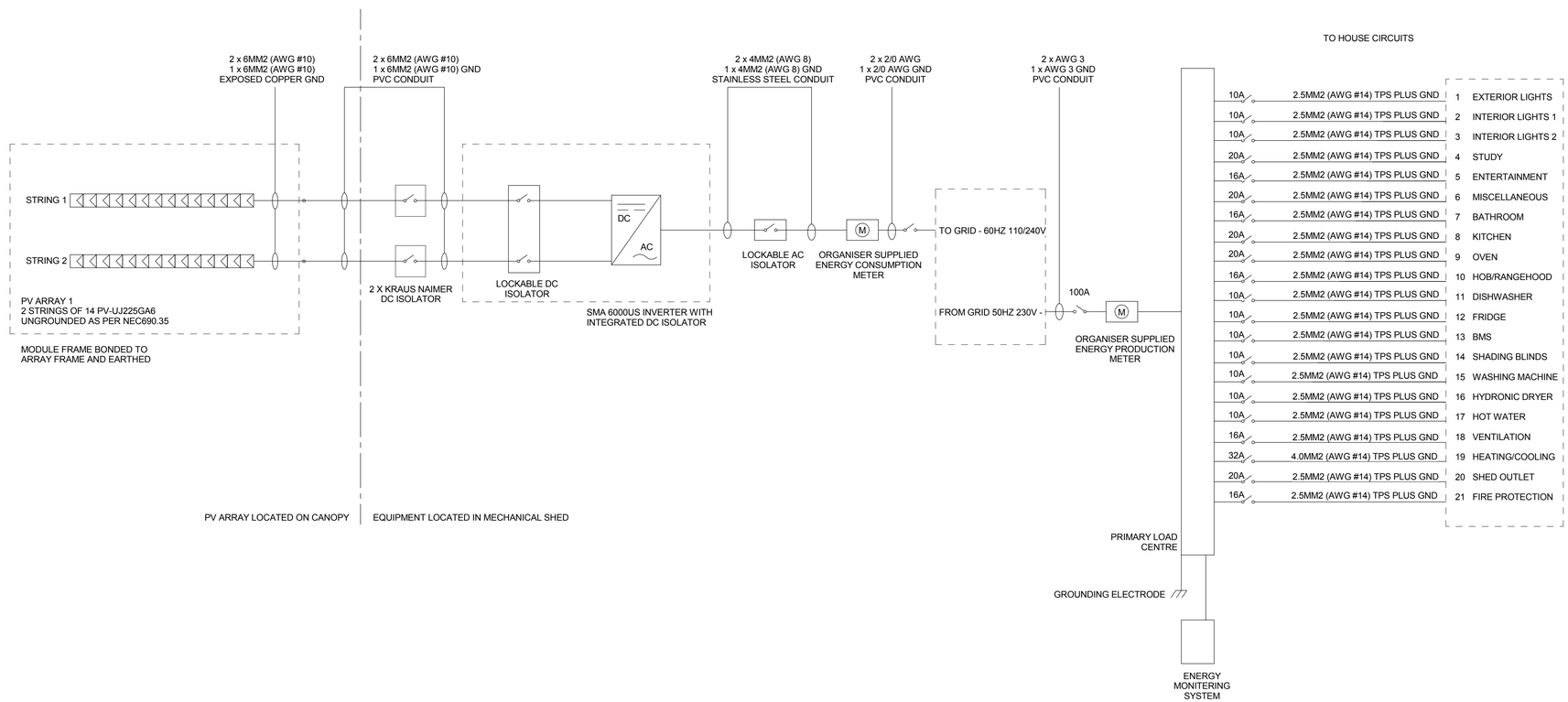

A1 ONE LINE DIAGRAM
1 : 100

GENERAL SHEET NOTES

REFERENCE KEYNOTES

SHEET KEYNOTES

FIRST LIGHT NZ

TEAM NAME:	FIRSTLIGHT NZ
ADDRESS:	139 VIVIAN STREET TE ARO, WELLINGTON NEWZEALAND
CONTACT:	INFO@FIRSTLIGHTHOUSE.AC.NZ WWW.FIRSTLIGHTHOUSE.AC.NZ

CONSULTANTS

TENNENT + BROWN ARCHITECTS
DUNNING THORNTON CONSULTANTS LTD
LEAP AUSTRALASIA LTD
SOUTHERN PERSPECTIVES / SOLAR CITY

CLIENT
U.S. DEPARTMENT OF ENERGY
SOLAR DECATHLON 2011
WWW.SOLARDECATHLON.GOV

U.S. DEPARTMENT OF ENERGY SOLAR DECATHLON

MARK	DATE	DESCRIPTION
CN	11-01-11	FOR CONSTRUCTION

LOT NUMBER:	LOT NUMBER
DRAWN BY:	AUTHOR
CHECKED BY:	CHECKER
COPYRIGHT:	VICTORIA UNIVERSITY

SHEET TITLE
ONE-LINE DIAGRAM

E-601

8/13/2011 8:29:54 AM

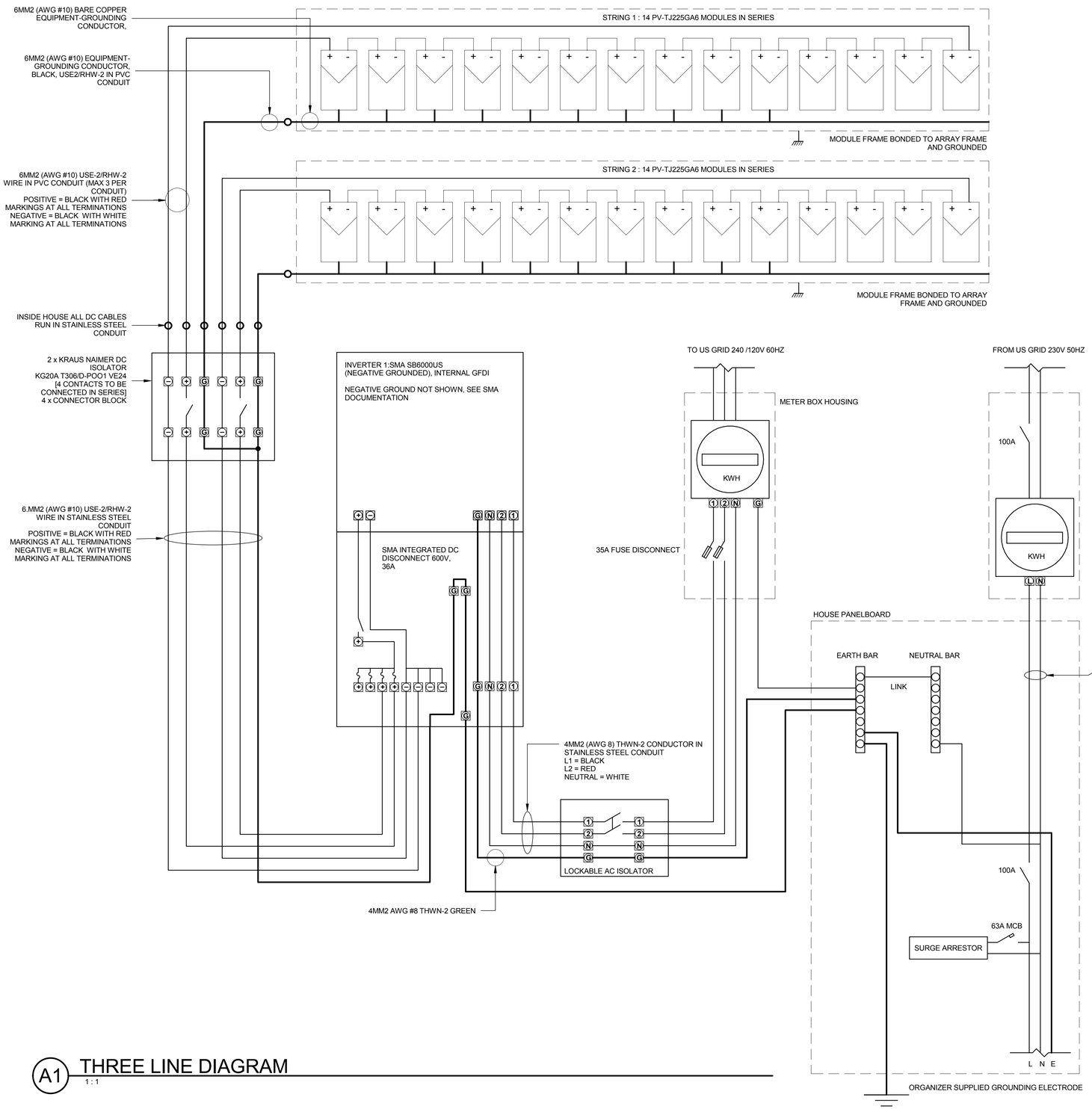

A1 THREE LINE DIAGRAM
1 : 1

CONDUCTORSDESIGN NOTES

MAXIMUM SYSTEM VOLTAGE

- 14 MODULES IN SERIES, 14 x 36.4V = 509.6V @ 25oc

- ASSUME MIN TEMPERATURE OF -7.2°C, WITH VOLTAGE COEFFICIENT FOR TEMPERATURE = -0.32%°C

- 25°C - (-7.2°C) = 32.2°C, 32.2°C x 0.32% = 10.3%

- TABLE 690.7, 14%

- 509.6 x 1.14 = **581V** (MAXIMUN SYSTEM VOLTAGE)

DC CONDUCTOR SIZE

- MAX 3 CONDUCTORS PER CONDUIT

- STRING CABLE (PV SOURCE CIRCUIT),
I(sc) x 1.25 = 8.3 x 1.25 = 10.4A (690.8(A)(1))

- ASSUME 35°C AMBIENT + 33°C ADDER (68°C) (TABLE 310.15(B)(2)(c), RESULTS IN CORRECTION FACTOR FOR TEMPERATURE OF 0.58

- 10.4A / 0.58 = 18A REQUIRED TABULATED CURRENT CARRY CAPACITY
MINIMUM 14AWG CONDUIT (TABLE 310.16)

- **6.00mm2 (AWG10)** REQUIRED FOR VOLTAGE DROP

1.56 X I(sc) = 8.3 x 1.56 = 12.9A. 12.9A < 40A (RATED CURRENT CARRYING CAPACITY OF 10AWG)

- ARRAY CABLE (PV OUTPUT CIRCUIT)
2 x 10.4A = 20.8A (690.8(A)(2)

- ARRAY CABLE IN SIDE BUILDING, OUT OF SUN,ASSUME MAXIMUM AMBIENT TEMPERATURE OF 45°C FOR PLANT ROOM. CORRECTION FACTOR OF 0.87 (TABLE 310.16 CORRECTION FACTORS)

- 20.8A / 0.87 = 24A REQUIRED TABULATED CURRENT CARRYING CAPACITY
MINIMUM 14AWG CONDUIT (TABLE 310.16)

- **6.0mm2 (AWG10)** REQUIRED FOR VOLTAGE DROP

1.56 x ISC = 16.6 x 1.56 = 25.9. 25.9A > 40A (RATED CURRENT CARRYING CAPACITY OF 10AWG)

DC GROUNDING CONDUCTOR

- RATED FOR MAXIMUM PV ARRAY CURRENT (690.45(A))

- MAXIMUM PV ARRAY CURRENT = 8.3 x 2 x 1.25 = 20.75A

- COPPER CONDUCTOR, **AWG10**

AC OUTPUT CIRCUIT

(6000 x 1.25)/240=32.8A
CORRECTION FACTOR INCLUDED

= 35A BREAKER

USE THWN-2 AWG8 CONDUCTORS

PV ARRAY DETAILS:

1. TOTAL ARRAY SIZE, 28 X 225W MODULES = 6.3KWP
2. CONFIGURED AS 2 SUB ARRAYS OF 1 STRING OF 14 MODULES

MODULE DETAILS:

MITSUBISHI PV-TJ225GA6
(IDENTICAL MODULE TO UL LISTED PV-UJ225GA6)

COMPLIANCE:

IEC 61215 EDITION 2, EN61730, TUV SAFETY CLASS II AND IEC 61730 (IDENTICAL PV-UJ225GA6 IS UL LISTED)

PMAX	225W
V(MPP)	30.0V
I(MPP)	7.5A
I(SC)	8.3A
V(OC)	36.4V
MAX V	1000VDC EU, 600VDC USA
LENGTH	1658MM
WIDTH	994MM
DEPTH	50MM
WEIGHT	20KG

STRING DETAILS:

PMAX	3.15KW
V(MPP)	420V
I(MPP)	7.5A
I(SC)	8.3A
V(OC)	509.6V
VMAX 690.7)	581V (690.7(A), TABLE

ARRAY DETAILS:

PMAX	6.3KW
V(MPP)	420V
I(MPP)	15A
I(SC)	16.6A
V(OC)	509.6V
VMAX 690.7)	581V (690.7(A), TABLE

INVERTER DETAILS:

MAKE	SMA
MODEL	SB 6000 US
OUTPUT POTENTIAL	TDB
OUTPUT FREQUENC	60HZ
EFFICIENCY(EU)	95%

GENERAL SHEET NOTES

1. DRAWING IS REPRESENATIONAL OF SYSTEM
2. THE DRAWING IS A WORKING DRAFT UNTIL PROJECT IS COMPLETE
3. REFER TO WIRE CALCULATION FOR WIRE AND CONDUIT SIZES
4. ALL PV SYSTEMS WILL BE DESIGNED AND INSTALLED IN FULL COMPLIANCE WITH THE 2008 NATIONAL ELECTRICAL CODE (NEC) AND THE 2010 SD RULES AND REGULATIONS
5. DC CIRCUITS FROM THE PV MODULES TO THE DC PV DISCONNECT MUST BE IN METAL CONDUIT (RACEWAYS) WHERE INSIDE THE STRUCTURE. (NEC690.31 (E))
6. ALL PV STRINGS TO USE MANUFACTURED PROVIDED CABLE.

REFERENCE KEYNOTES

FIRST LIGHT NZ

TEAM NAME:	FIRST LIGHT
ADDRESS:	139 VIVIAN STREET TE ARO, WELLINGTON NEWZEALAND
CONTACT:	ELINUTTALL@GMAIL.COM WWW.FIRSTLIGHTHOUSE.AC.NZ

CONSULTANTS

TENNENT + BROWN ARCHITECTS
DUNNING THORNTON CONSULTANTS LTD
LEAP AUSTRALASIA LTD
SOUTHERN PERSPECTIVES / SOLAR CITY

CLIENT
U.S. DEPARTMENT OF ENERGY
SOLAR DECATHLON 2011
WWW.SOLARDECATHLON.GOV

U.S. DEPARTMENT OF ENERGY SOLAR DECATHLON

MARK	DATE	DESCRIPTION
CN	11-01-11	FOR CONSTRUCTION

LOT NUMBER:	LOT NUMBER
DRAWN BY:	Author
CHECKED BY:	Checker
COPYRIGHT:	

SHEET TITLE
3 LINE DIAGRAM

E-602

8/13/2011 8:29:57 AM

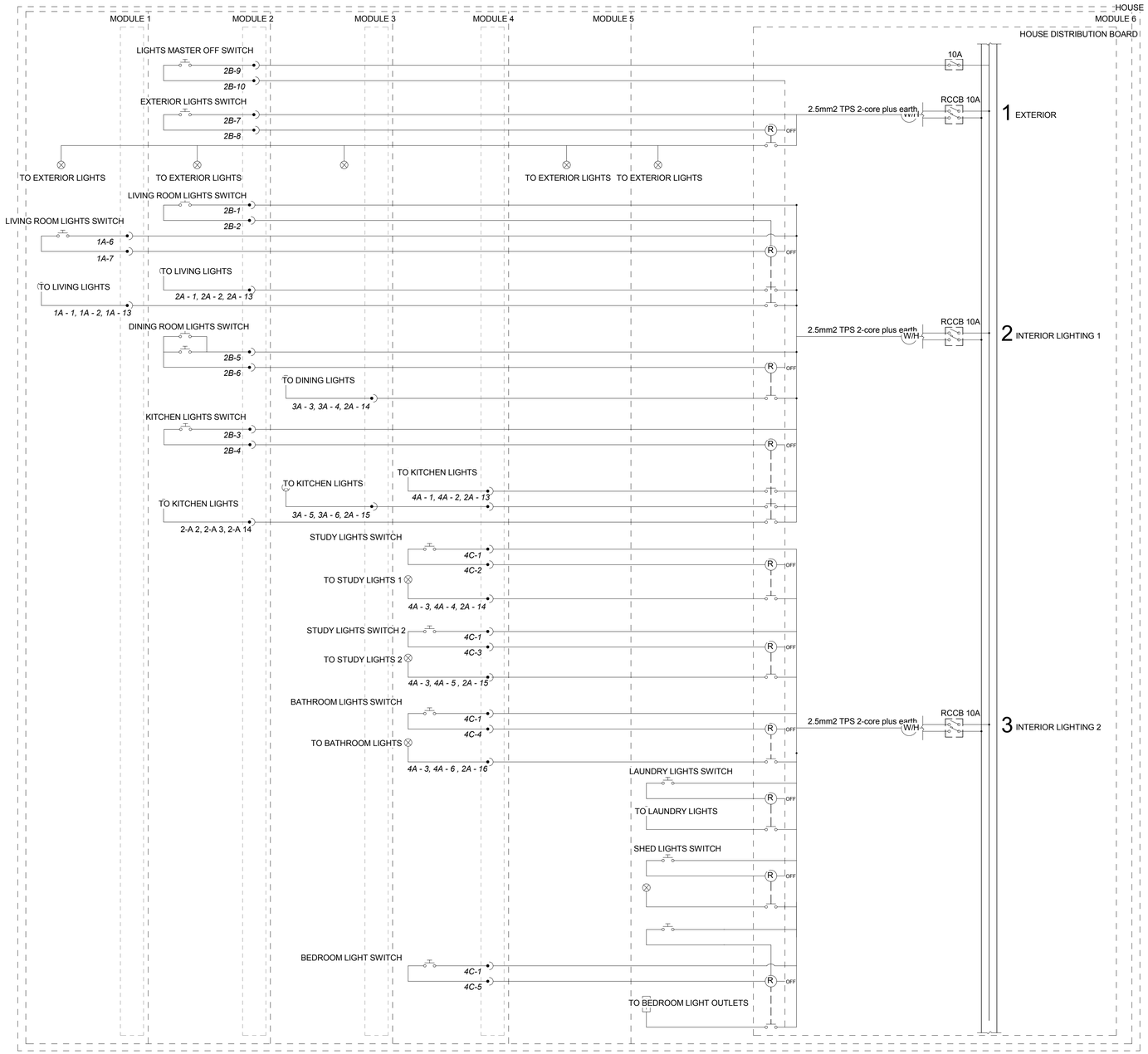

A1 3 LINE DIAGRAM - CONTINUED
1 : 128

8/13/2011 8:30:01 AM

GENERAL SHEET NOTES

REFERENCE KEYNOTES

SHEET KEYNOTES

FIRST LIGHT NZ

TEAM NAME:	FIRST LIGHT
ADDRESS:	139 VIVIAN STREET TE ARO, WELLINGTON NEWZEALAND
CONTACT:	ELINUTTALL@GMAIL.COM WWW.FIRSTLIGHTHOUSE.AC.NZ

CONSULTANTS

TENNENT + BROWN ARCHITECTS
DUNNING THORNTON CONSULTANTS LTD
LEAP AUSTRALASIA LTD
SOUTHERN PERSPECTIVES / SOLAR CITY

CLIENT
U.S. DEPARTMENT OF ENERGY
SOLAR DECATHLON 2011
WWW.SOLARDECATHLON.GOV

U.S. DEPARTMENT OF ENERGY SOLAR DECATHLON

MARK	DATE	DESCRIPTION
CN	11-01-11	FOR CONSTRUCTION

LOT NUMBER:	LOT NUMBER
DRAWN BY:	Author
CHECKED BY:	Checker
COPYRIGHT:	

SHEET TITLE
3 LINE DIAGRAM CONTINUED

E-603

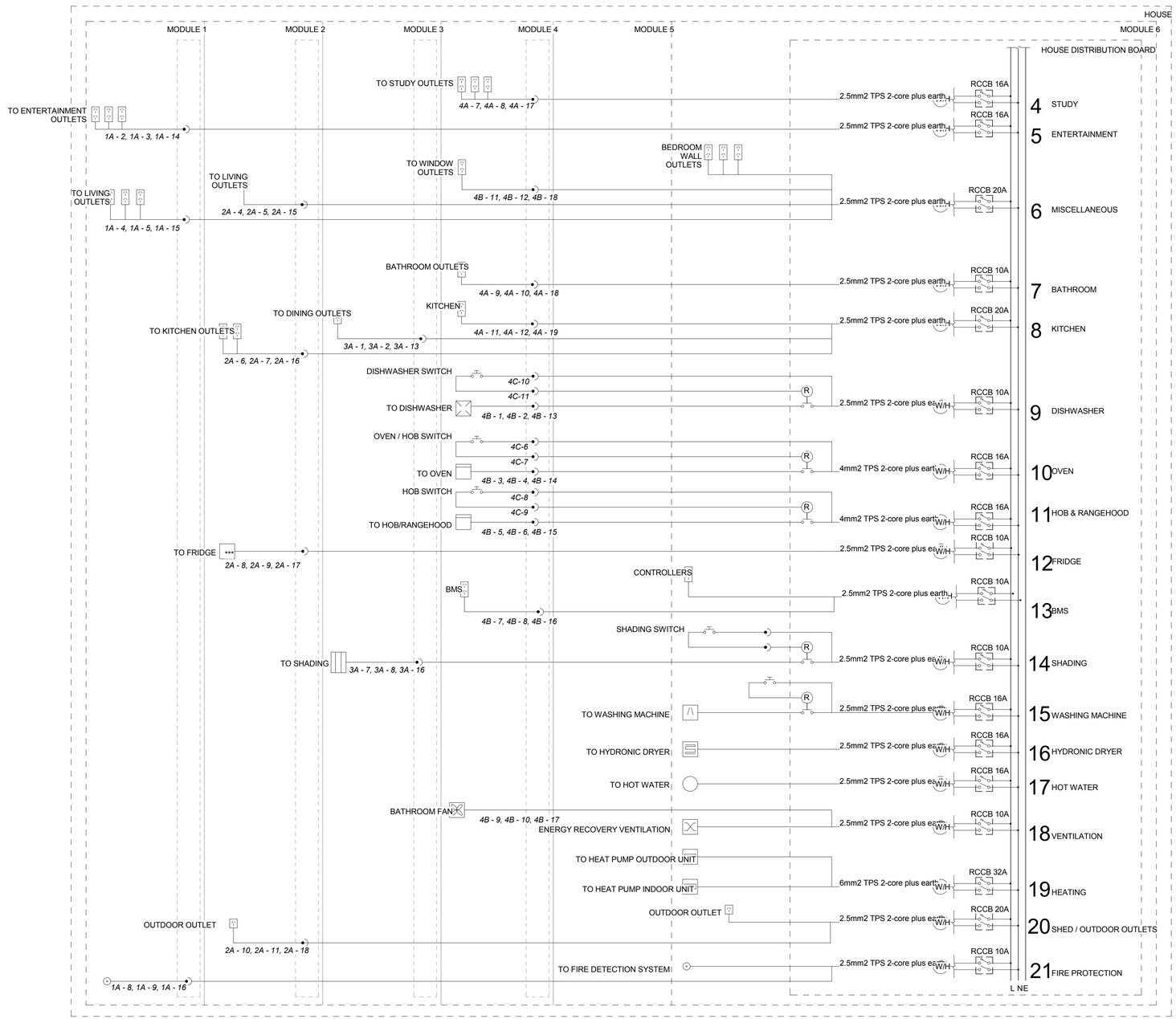

A1 3-LINE DIAGRAM CONTINUED
1 : 128

8/13/2011 8:30:05 AM

GENERAL SHEET NOTES

REFERENCE KEYNOTES

SHEET KEYNOTES

FIRST LIGHT NZ

TEAM NAME:	FIRST LIGHT
ADDRESS:	139 VIVIAN STREET TE ARO, WELLINGTON NEWZEALAND
CONTACT:	ELINUTTALL@GMAIL.COM WWW.FIRSTLIGHTHOUSE.AC.NZ

CONSULTANTS

TENNENT + BROWN ARCHITECTS
DUNNING THORNTON CONSULTANTS LTD
LEAP AUSTRALASIA LTD
SOUTHERN PERSPECTIVES / SOLAR CITY

CLIENT
U.S. DEPARTMENT OF ENERGY
SOLAR DECATHLON 2011
WWW.SOLARDECATHLON.GOV

U.S. DEPARTMENT OF ENERGY SOLAR DECATHLON

MARK	DATE	DESCRIPTION
CN	11-01-11	FOR CONSTRUCTION

LOT NUMBER:	LOT NUMBER
DRAWN BY:	Author
CHECKED BY:	Checker
COPYRIGHT:	

SHEET TITLE
THREE-LINE DIAGRAM CONTINUED

E-604

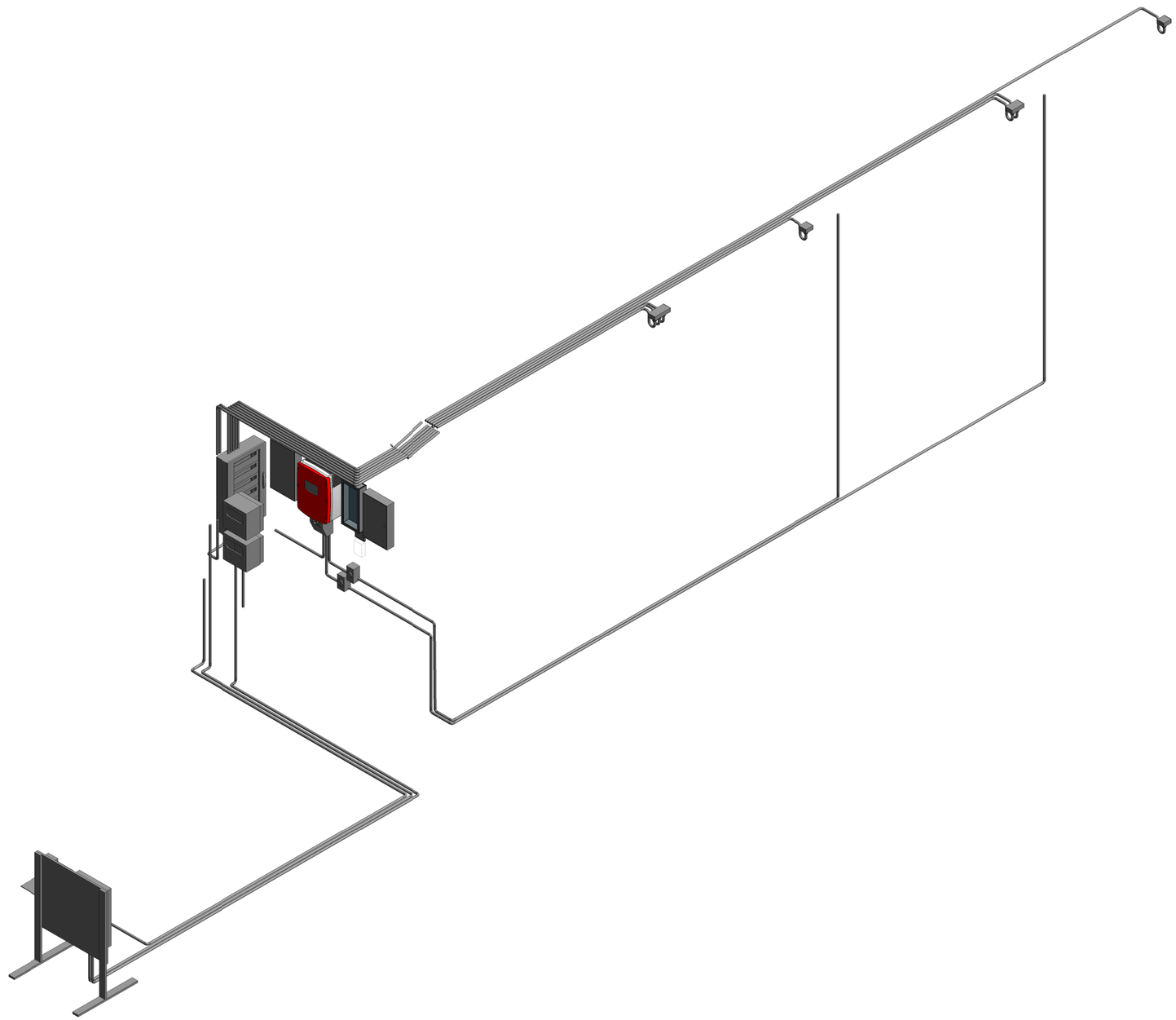

1 ELECTRICAL 3D

8/13/2011 8:30:14 AM

FIRST LIGHT NZ

TEAM NAME:	FIRST LIGHT
ADDRESS:	139 VIVIAN STREET TE ARO, WELLINGTON NEWZEALAND
CONTACT:	ELINUTTALL@GMAIL.COM WWW.FIRSTLIGHTHOUSE.AC.NZ

CONSULTANTS

TENNENT + BROWN ARCHITECTS
DUNNING THORNTON CONSULTANTS LTD
LEAP AUSTRALASIA LTD
SOUTHERN PERSPECTIVES / SOLAR CITY

CLIENT

U.S. DEPARTMENT OF ENERGY
SOLAR DECATHLON 2011
WWW.SOLARDECATHLON.GOV

U.S. DEPARTMENT OF ENERGY SOLAR DECATHLON

MARK	DATE	DESCRIPTION
CN	11-01-11	FOR CONSTRUCTION

LOT NUMBER:	LOT NUMBER
DRAWN BY:	Author
CHECKED BY:	Checker
COPYRIGHT:	

SHEET TITLE

ELECTRIC ISOMETRICS

E-901

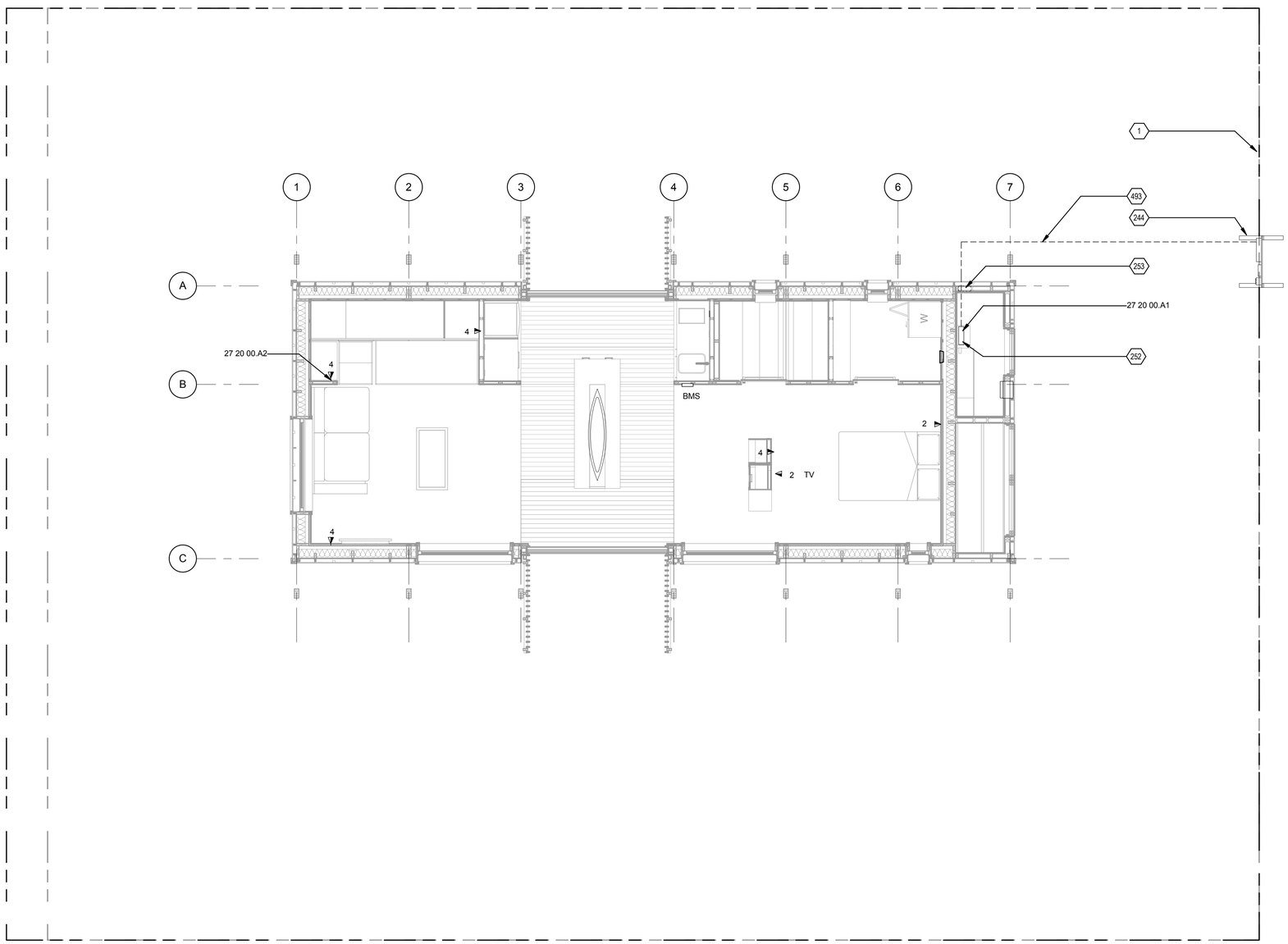

A1 DATA AND COMMS PLAN
1 : 48

0 2' 4' 8'

GENERAL SHEET NOTES

REFERENCE KEYNOTES

27 20 00.A1	LEXCOM 22" HOME NETWORK DISTRIBUTION CABINET
27 20 00.A2	DATA OUTLET

SHEET KEYNOTES

1	SITE BOUNDARY
244	UTILITY INTERCONNECTION POINT, LOCATION TO BE CONFIRMED
252	305MM X 305MM LOCATION OF NETWORK SWITCH
253	NETWORK CABLE ENTRANCE INTO HOUSE
493	ORGANIZER SUPPLIED ETHERNET CABLE RUNNING FROM ORGANIZER UTILITY PANEL TO THE ORGANIZER ENCLOSURE

FIRST LIGHT NZ

TEAM NAME:	FIRSTLIGHT NZ
ADDRESS:	139 VIVIAN STREET TE ARO, WELLINGTON NEWZEALAND
CONTACT:	INFO@FIRSTLIGHTHOUSE.AC.NZ WWW.FIRSTLIGHTHOUSE.AC.NZ

CONSULTANTS

TENNENT + BROWN ARCHITECTS
DUNNING THORNTON CONSULTANTS LTD
LEAP AUSTRALASIA LTD
SOUTHERN PERSPECTIVES / SOLAR CITY

CLIENT

U.S. DEPARTMENT OF ENERGY
SOLAR DECATHLON 2011
WWW.SOLARDECATHLON.GOV

U.S. DEPARTMENT OF ENERGY SOLAR DECATHLON

MARK	DATE	DESCRIPTION
CN	11-01-11	FOR CONSTRUCTION

LOT NUMBER:	LOT NUMBER
DRAWN BY:	AUTHOR
CHECKED BY:	CHECKER
COPYRIGHT:	VICTORIA UNIVERSITY

SHEET TITLE

TELECOMMUNICATIONS WIRING PLAN

T-101

8/13/2011 8:52:03 AM

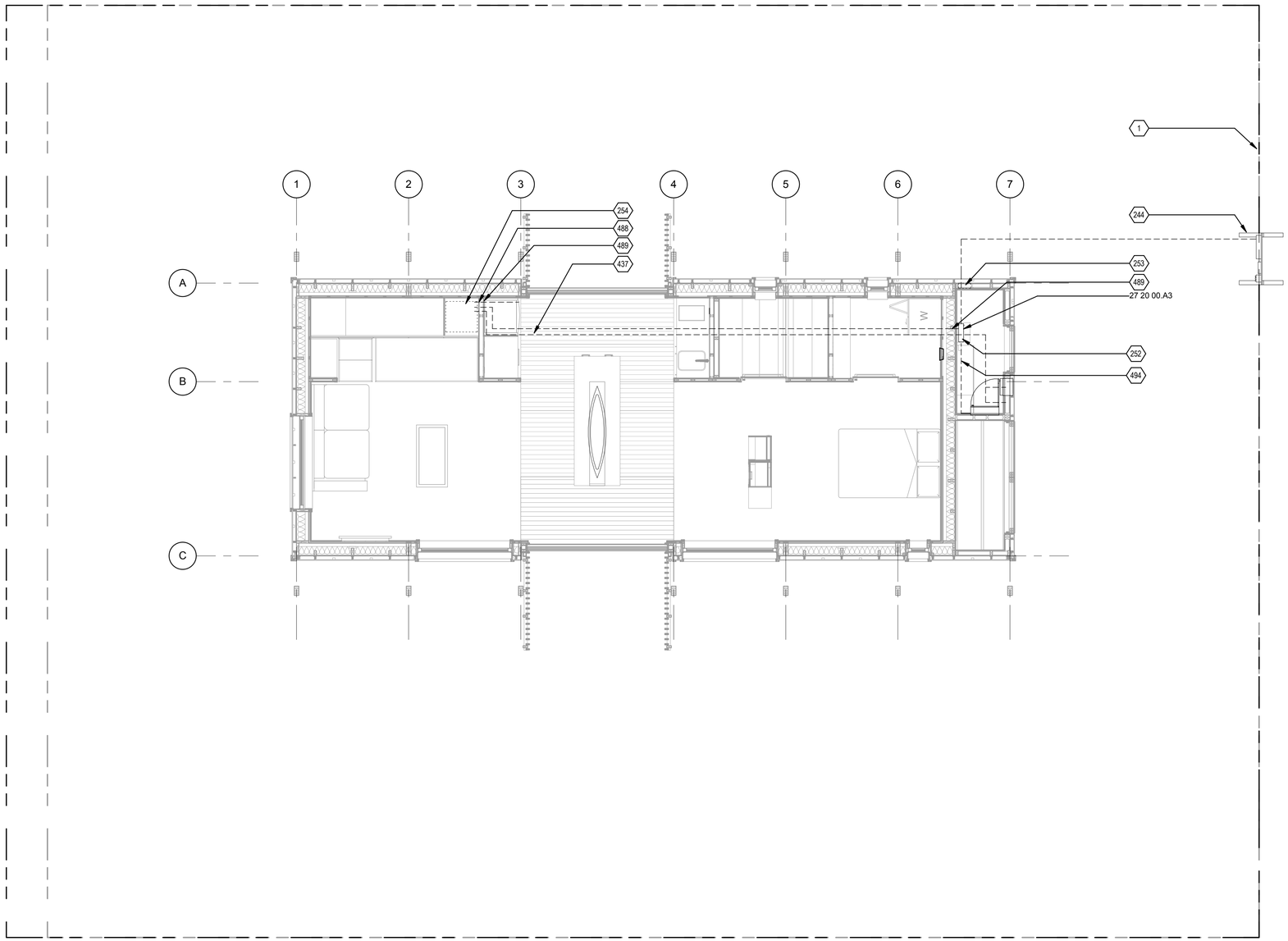

A1 TEAM INTERCONNECTION FLOOR PLAN
1 : 48

GENERAL SHEET NOTES

REFERENCE KEYNOTES

27 20 00.A3	ORGANIZERS ENCLOSURE

SHEET KEYNOTES

1	SITE BOUNDARY
244	UTILITY INTERCONNECTION POINT, LOCATION TO BE CONFIRMED
252	305MM X 305MM LOCATION OF NETWORK SWITCH
253	NETWORK CABLE ENTRANCE INTO HOUSE
254	LOCATION OF ORGANISER SUPPLIED DATALOGGER
437	CABLING ROUTES FOR ORGANISER SUPPLIED CABLING BETWEEN NETWORK SWITCH / PV MONITOR AND DATALOGGER, AND DATALOGGER AND UTILITY METERS. CABLING RUNS IN CABLE TRAY CONCEALED WITHIN SERVICES BULKHEAD
488	DATALOGGER LOCATED IN LIVING ROOM SHELVING UNIT DIRECTLY BEHIND FRIDGE
489	MIN 1" CONDUIT THROUGH WALL FOR ORGANIZER SENSOR RUN
494	SPACE FOR ORGANIZER INSTALLED CONDUIT BETWEEN ORGANIZER ENCLOSURE AND PV SYSTEM

FIRST LIGHT NZ

TEAM NAME:	FIRST LIGHT
ADDRESS:	139 VIVIAN STREET TE ARO, WELLINGTON NEWZEALAND
CONTACT:	ELINUTTALL@GMAIL.COM WWW.FIRSTLIGHTHOUSE.AC.NZ

CONSULTANTS

TENNENT + BROWN ARCHITECTS
DUNNING THORNTON CONSULTANTS LTD
LEAP AUSTRALASIA LTD
SOUTHERN PERSPECTIVES / SOLAR CITY

CLIENT

U.S. DEPARTMENT OF ENERGY
SOLAR DECATHLON 2011
WWW.SOLARDECATHLON.GOV

U.S. DEPARTMENT OF ENERGY SOLAR DECATHLON

MARK	DATE	DESCRIPTION
CN	11-01-11	FOR CONSTRUCTION

LOT NUMBER:	LOT NUMBER
DRAWN BY:	Author
CHECKED BY:	Checker
COPYRIGHT:	

SHEET TITLE

TEAM INTERCONNECTION FLOOR PLAN

T-102

8/13/2011 8:52:14 AM

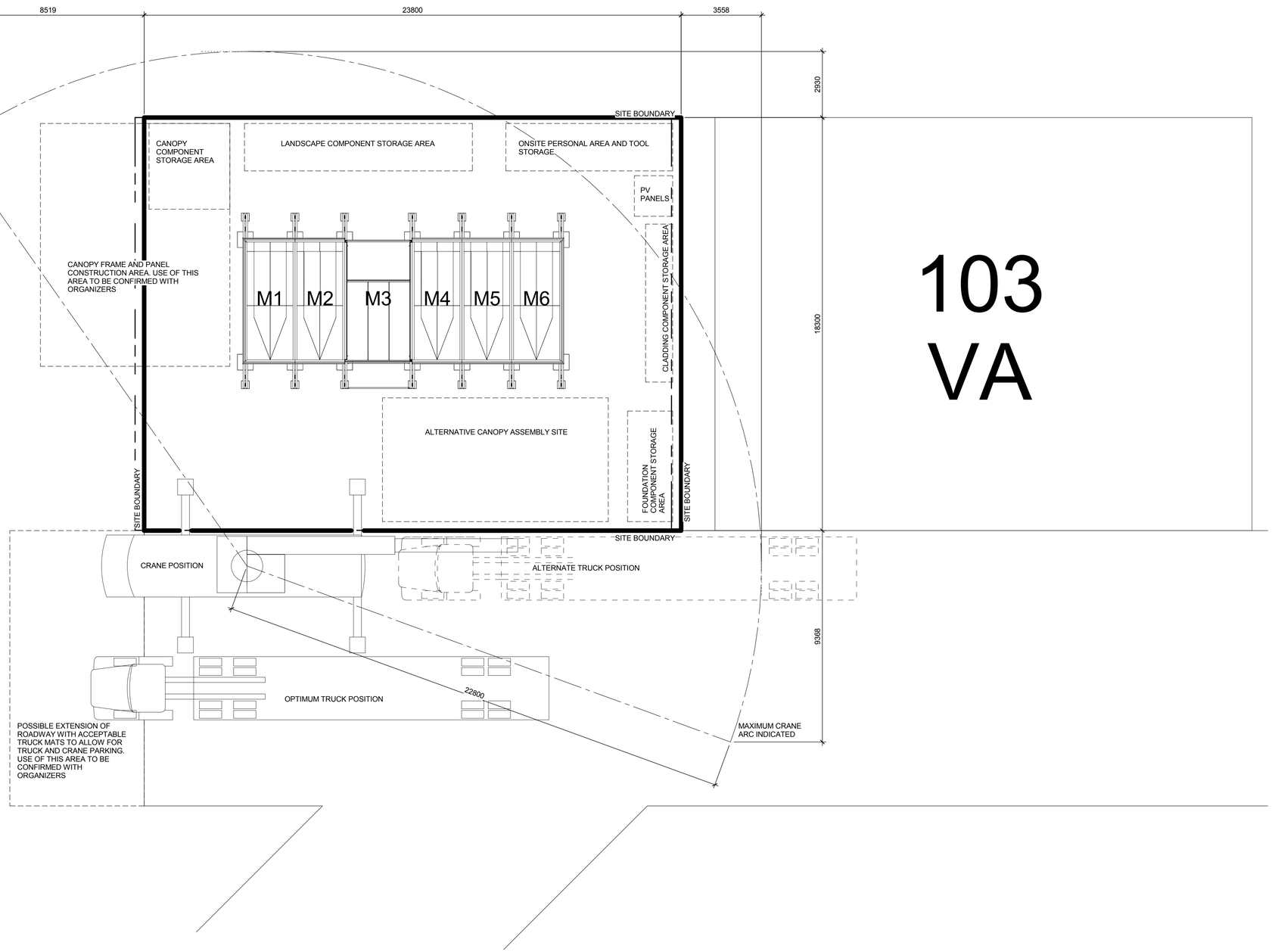

A1 SITE STAGING PLAN
1 : 100

0 1' 2' 4'

8/13/2011 8:43:17 AM

GENERAL SHEET NOTES

REFERENCE KEYNOTES

SHEET KEYNOTES

FIRST LIGHT NZ

TEAM NAME:	FIRST LIGHT
ADDRESS:	139 VIVIAN STREET TE ARO, WELLINGTON NEWZEALAND
CONTACT:	ELINUTTALL@GMAIL.COM WWW.FIRSTLIGHTHOUSE.AC.NZ

CONSULTANTS

TENNENT + BROWN ARCHITECTS
DUNNING THORNTON CONSULTANTS LTD
LEAP AUSTRALASIA LTD
SOUTHERN PERSPECTIVES / SOLAR CITY

CLIENT
U.S. DEPARTMENT OF ENERGY
SOLAR DECATHLON 2011
WWW.SOLARDECATHLON.GOV

U.S. DEPARTMENT OF ENERGY SOLAR DECATHLON

MARK	DATE	DESCRIPTION
CN	11-01-11	FOR CONSTRUCTION

LOT NUMBER:	LOT NUMBER
DRAWN BY:	AUTHOR
CHECKED BY:	CHECKER
COPYRIGHT:	

SHEET TITLE
SITE STAGING PLAN

O-101

TRUCKS 2, 3 & 4 TRANSPORT
MODULES TO AND FROM
ASSEMBLY SITE

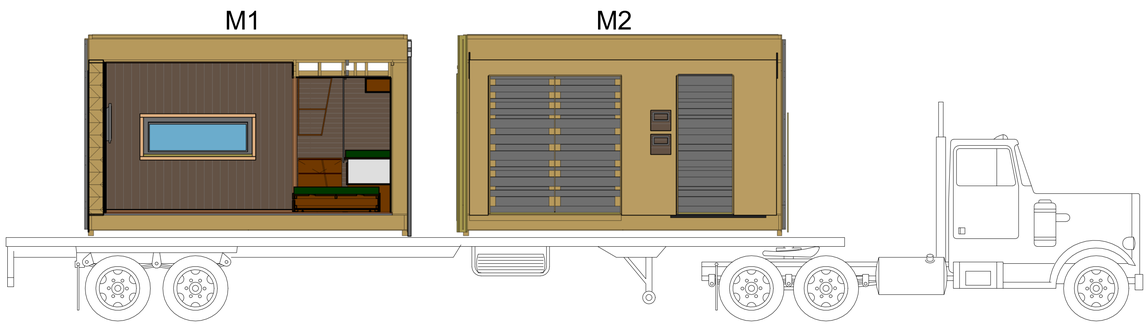

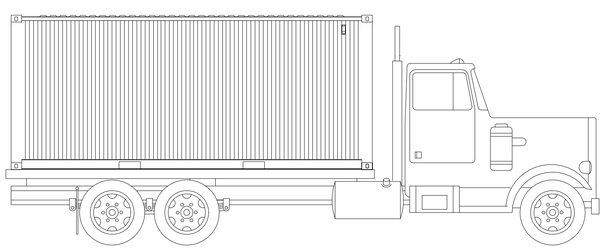

TRUCK 1 TRANSPORTS THE SINGLE
20 FOOT SHIPPING CONTAINER TO
AND FROM ASSEMBLY SITE

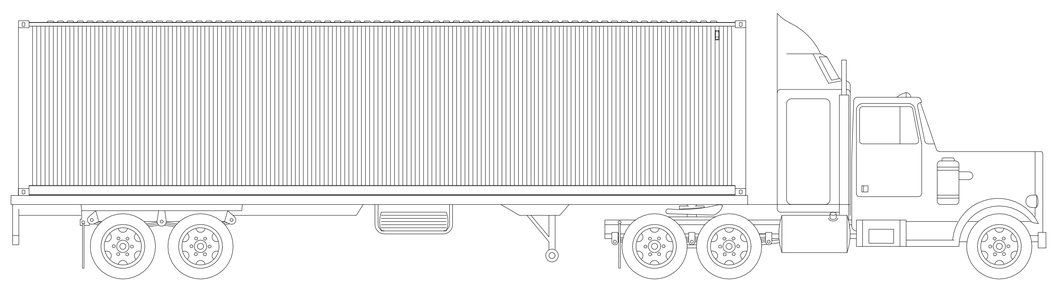

TRUCK 5 TRANSPORTS THE SINGLE
40 FOOT HIGHCUBE SHIPPING
CONTAINER TO AND FROM
ASSEMBLY SITE

A1 ASSEMBLY TRANSPORT

8/13/2011 8:43:27 AM

FIRST LIGHT NZ

TEAM NAME:	FIRST LIGHT
ADDRESS:	139 VIVIAN STREET TE ARO, WELLINGTON NEWZEALAND
CONTACT:	ELINUTTALL@GMAIL.COM WWW.FIRSTLIGHTHOUSE.AC.NZ

CONSULTANTS

TENNENT + BROWN ARCHITECTS
DUNNING THORNTON CONSULTANTS LTD
LEAP AUSTRALASIA LTD
SOUTHERN PERSPECTIVES / SOLAR CITY

CLIENT

U.S. DEPARTMENT OF ENERGY
SOLAR DECATHLON 2011
WWW.SOLARDECATHLON.GOV

U.S. DEPARTMENT OF ENERGY SOLAR DECATHLON

MARK	DATE	DESCRIPTION
CN	11-01-11	FOR CONSTRUCTION

LOT NUMBER:	LOT NUMBER
DRAWN BY:	Author
CHECKED BY:	Checker
COPYRIGHT:	

SHEET TITLE

TRANSPORT

O-102

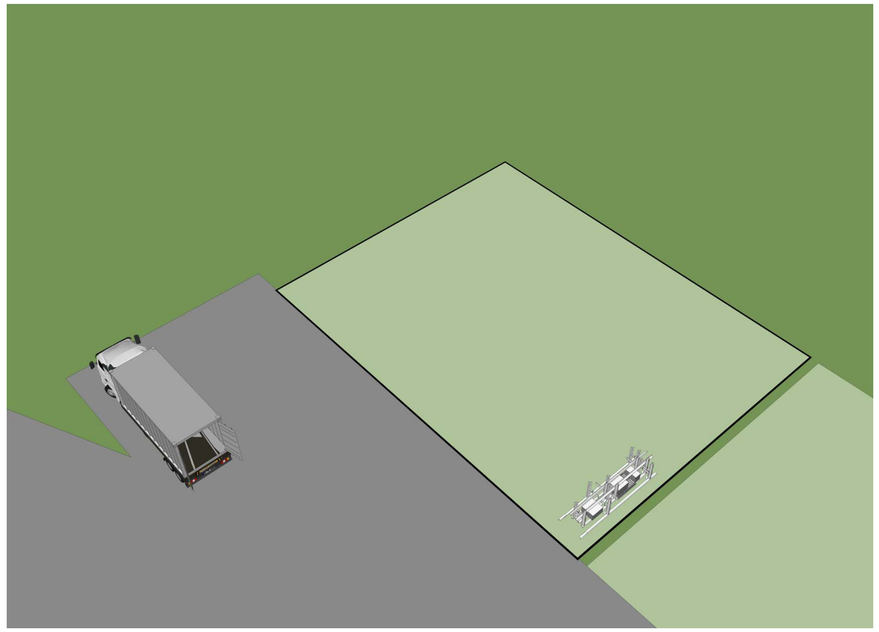

C1 STEP 1 - SITE PREPARATIONS

- TRUCK 1 ARRIVES ONSITE. REFER TO O-101 FOR TRUCK PARKING LOCATION
- TOOLS, GENERATORS AND LIGHTING EQUIPMENT ARE UNLOADED AND SET UP IN DESIGNATED AREAS AS PER O-101
- THE FOUNDATION SYSTEM IS UNLOADED
- TRUCK 1 LEAVES SITE
- A SITE SURVEY IS CONDUCTED TO ESTABLISH SITE LEVELS AND SETOUT THE FOUNDATION SYSTEM

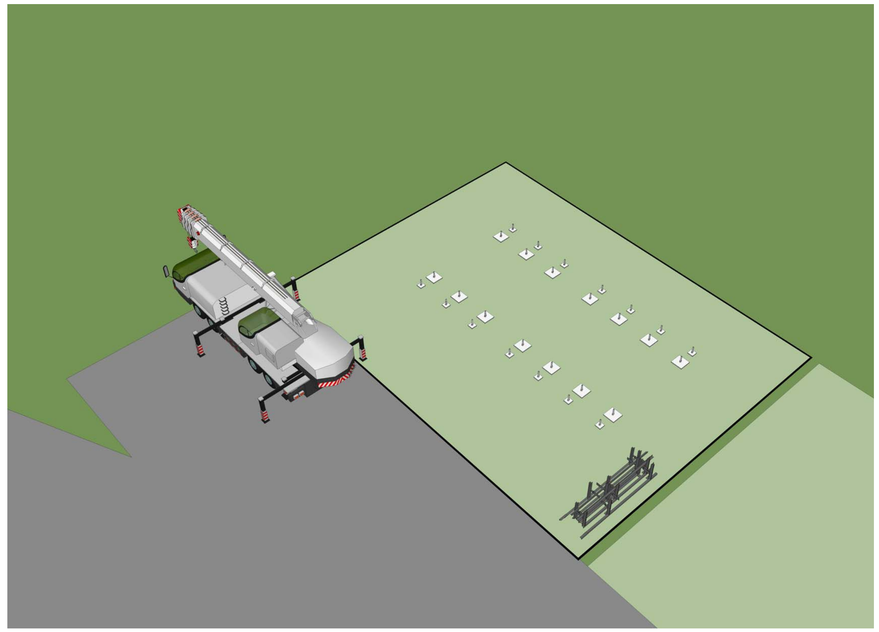

A1 STEP 2 - FOUNDATION SET OUT

- FOUNDATION PADS ARE POSITIONED ACCORDING TO SITE SURVEY
- FOUNDATION UPRIGHTS ARE FIXED TO FOUNDATION PADS
- FOUNDATION SPACERS ARE INSERTED ACCORDING TO SITE SURVEY
- FOUNDATION UPRIGHTS ARE LEVELED AND CHECKED WITH LASER LEVEL
- CRANE ARRIVES ONSITE (LOCATION AS PER O-101) AND IS SET UP

GENERAL SHEET NOTES

REFERENCE KEYNOTES

SHEET KEYNOTES

FIRST LIGHT NZ

TEAM NAME:	FIRST LIGHT
ADDRESS:	139 VIVIAN STREET TE ARO, WELLINGTON NEWZEALAND
CONTACT:	ELINUTTALL@GMAIL.COM WWW.FIRSTLIGHTHOUSE.AC.NZ

CONSULTANTS

TENNENT + BROWN ARCHITECTS
DUNNING THORNTON CONSULTANTS LTD
LEAP AUSTRALASIA LTD
SOUTHERN PERSPECTIVES / SOLAR CITY

CLIENT

U.S. DEPARTMENT OF ENERGY
SOLAR DECATHLON 2011
WWW.SOLARDECATHLON.GOV

U.S. DEPARTMENT OF ENERGY SOLAR DECATHLON

MARK	DATE	DESCRIPTION
CN	11-01-11	FOR CONSTRUCTION

LOT NUMBER:	LOT NUMBER
DRAWN BY:	Author
CHECKED BY:	Checker
COPYRIGHT:	

SHEET TITLE

ASSEMBLY SEQUENCE

O-103

8/13/2011 8:43:45 AM

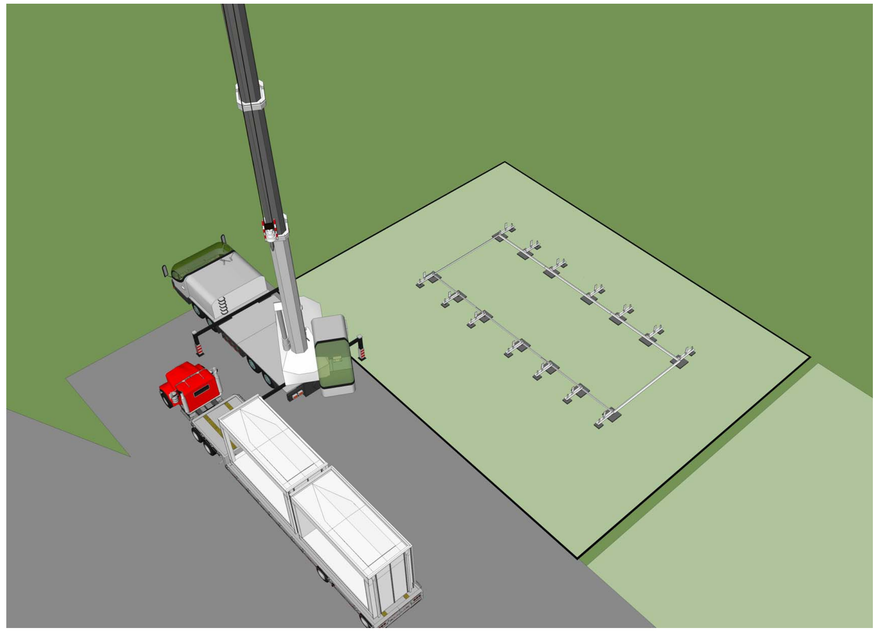

C1 STEP 3 - FOUNDATION ASSEMBLY

- STEEL FOUNDATION MEMBERS ARE LIFTED INTO PLACE OVER FOUNDATION UPRIGHTS
- STEEL FOUNDATION MEMBERS FIXED TOGETHER
- FOUNDATION SYTEM LEVELS CHECKED WITH LASER LEVEL
- TRUCK 2 ARRIVES ONSITE (LOCATION AS PER O-101) WITH MODULES 1 & 2
- CRANE PREPARES TO LIFT MODULES 1 & 2 INTO PLACE

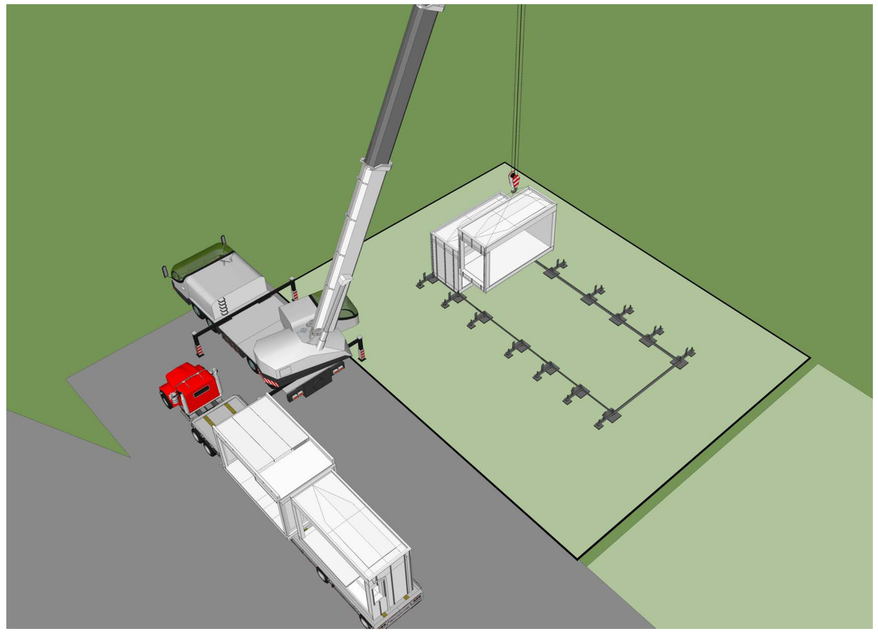

A1 STEP 4 - PLACEMENT OF MODULES 1 & 2

- MODULE 1 LIFTED INTO PLACE AND FIXED TO FOUNDATION
- MODULE 2 LIFTED INTO PLACE AND FIXED TO FOUNDATION AND MODULE 1
- TRUCK 2 LEAVES SITE
- TRUCK 3 ARRIVES ONSITE (LOCATION AS PER O-101) WITH MODULES 3 & 4
- CRANE PREPARES TO LIFT MODULES 3 & 4 INTO PLACE

GENERAL SHEET NOTES

REFERENCE KEYNOTES

SHEET KEYNOTES

FIRST LIGHT NZ

TEAM NAME:	FIRST LIGHT
ADDRESS:	139 VIVIAN STREET TE ARO, WELLINGTON NEWZEALAND
CONTACT:	ELINUTTALL@GMAIL.COM WWW.FIRSTLIGHTHOUSE.AC.NZ

CONSULTANTS

TENNENT + BROWN ARCHITECTS
DUNNING THORNTON CONSULTANTS LTD
LEAP AUSTRALASIA LTD
SOUTHERN PERSPECTIVES / SOLAR CITY

CLIENT

U.S. DEPARTMENT OF ENERGY
SOLAR DECATHLON 2011
WWW.SOLARDECATHLON.GOV

U.S. DEPARTMENT OF ENERGY SOLAR DECATHLON

MARK	DATE	DESCRIPTION
CN	11-01-11	FOR CONSTRUCTION

LOT NUMBER:	LOT NUMBER
DRAWN BY:	Author
CHECKED BY:	Checker
COPYRIGHT:	

SHEET TITLE

ASSEMBLY SEQUENCE

O-104

8/13/2011 8:44:03 AM

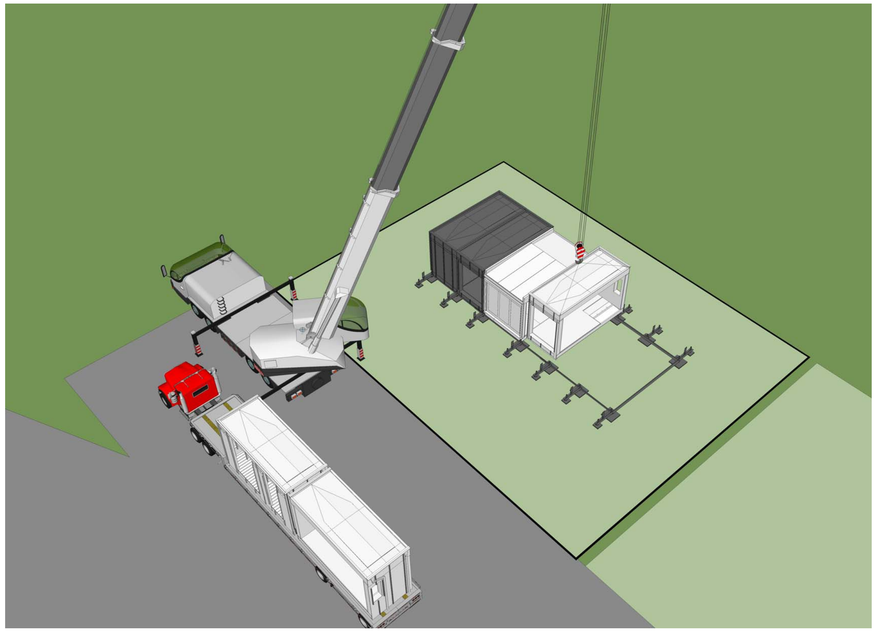

- MODULE 3 LIFTED INTO PLACE AND FIXED TO FOUNDATION AND MODULE 2
- MODULE 4 LIFTED INTO PLACE AND FIXED TO FOUNDATION AND MODULE 3
- TRUCK 3 LEAVES SITE
- TRUCK 4 ARRIVES ONSITE (LOCATION AS PER O-101) WITH MODULES 5 & 6
- CRANE PREPARES TO LIFT MODULES INTO PLACE

C1 STEP 5 - PLACEMENT OF MODULES 3 & 4

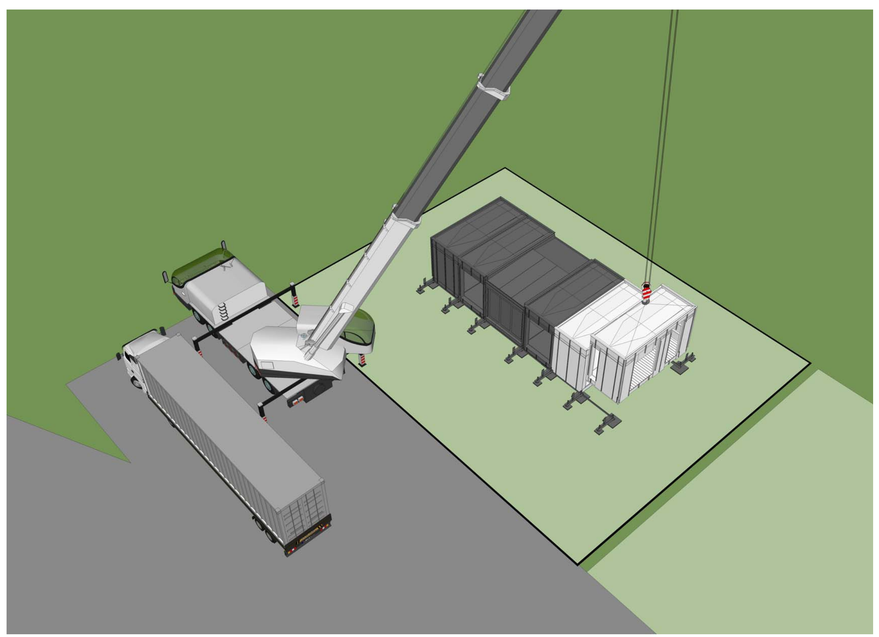

- MODULE 5 LIFTED INTO PLACE AND FIXED TO FOUNDATION AND MODULE 4
- MODULE 6 LIFTED INTO PLACE AND FIXED TO FOUNDATION AND MODULE 5
- TRUCK 4 LEAVES SITE
- TRUCK 5 ARRIVES ONSITE (LOCATION AS PER O-101) WITH 40 FOOT CONTAINER

A1 STEP 6 - PLACEMENT OF MODULES 5 & 6

GENERAL SHEET NOTES

REFERENCE KEYNOTES

SHEET KEYNOTES

FIRST LIGHT NZ

TEAM NAME:	FIRST LIGHT
ADDRESS:	139 VIVIAN STREET TE ARO, WELLINGTON NEWZEALAND
CONTACT:	ELINUTTALL@GMAIL.COM WWW.FIRSTLIGHTHOUSE.AC.NZ

CONSULTANTS

TENNENT + BROWN ARCHITECTS
DUNNING THORNTON CONSULTANTS LTD
LEAP AUSTRALASIA LTD
SOUTHERN PERSPECTIVES / SOLAR CITY

CLIENT

U.S. DEPARTMENT OF ENERGY
SOLAR DECATHLON 2011
WWW.SOLARDECATHLON.GOV

U.S. DEPARTMENT OF ENERGY SOLAR DECATHLON

MARK	DATE	DESCRIPTION
CN	11-01-11	FOR CONSTRUCTION

LOT NUMBER:	LOT NUMBER
DRAWN BY:	Author
CHECKED BY:	Checker
COPYRIGHT:	

SHEET TITLE

ASSEMBLY SEQUENCE

O-105

8/13/2011 8:44:33 AM

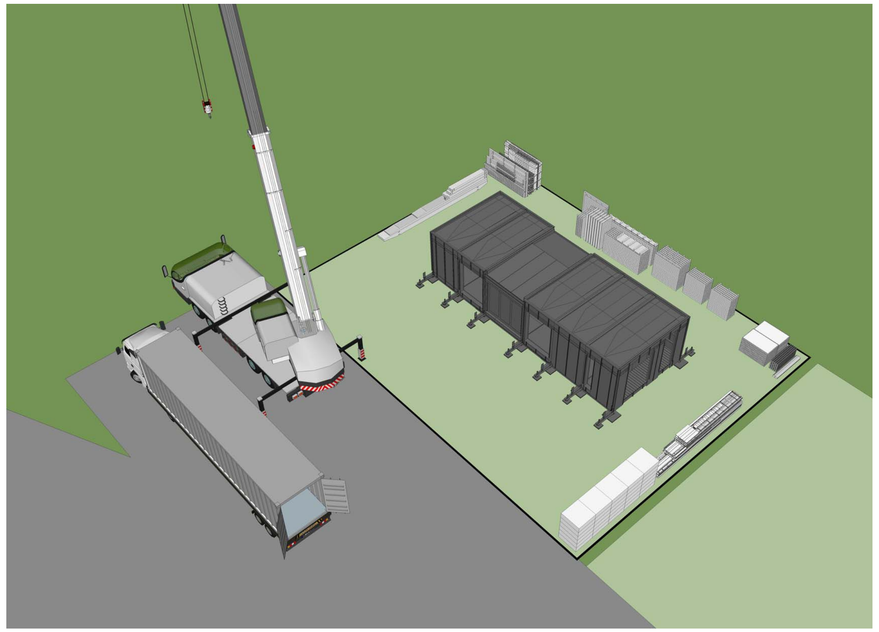

- 40 FOOT CONTAINER IS UNLOADED AND ALL COMPONENTS PLACED IN THEIR DESIGNATED AREAS (REFER O-101)
- TRUCK 5 LEAVES SITE WITH EMPTY 40 FOOT CONTAINER

C1 STEP 7 - UNLOAD SHIPPING CONTAINER

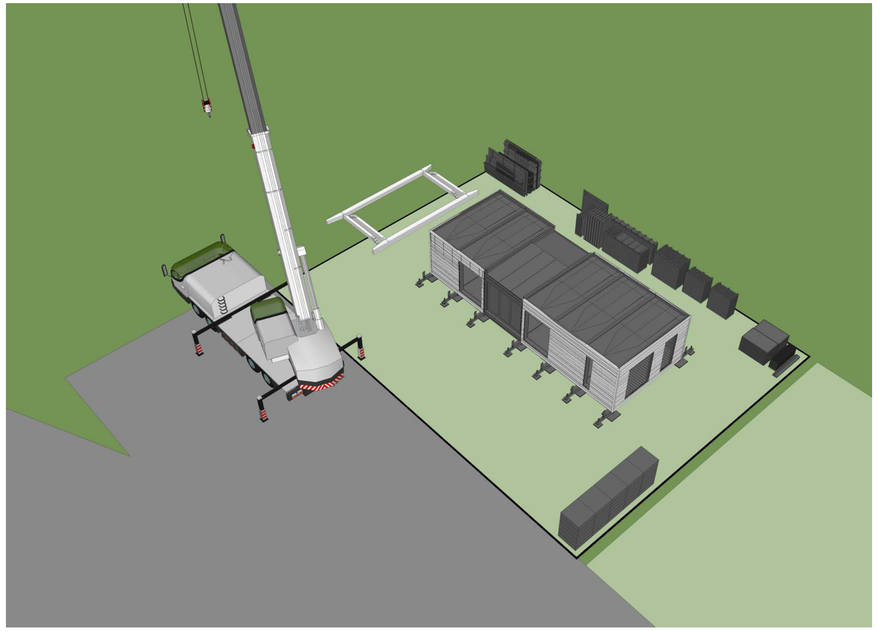

- MODULE JOINS ARE WEATHERPROOFED - REFER TO DRAWING A-501 & A-511
- CLADDING PANELS ARE ATTACHED TO THE MODULES - REFER TO DRAWINGS A-591- A-596
- INDIVIDUAL COMPONENTS OF THE CLADDING SYSTEM INSTALLED - REFER TO DRAWINGS A-597 & A-598
- CANOPY FRAMES ARE ASSEMBLED ON GROUND IN DESIGNATED AREA - REFER TO DRAWINGS A-461 - A-480
- CRANE PREPARES TO LIFT CANOPY FRAMES INTO PLACE

A1 STEP 8 - CLADDING INSTALLATION & CANOPY FRAME ASSEMBLY

GENERAL SHEET NOTES

REFERENCE KEYNOTES

SHEET KEYNOTES

FIRST LIGHT NZ

TEAM NAME:	FIRST LIGHT
ADDRESS:	139 VIVIAN STREET TE ARO, WELLINGTON NEWZEALAND
CONTACT:	ELINUTTALL@GMAIL.COM WWW.FIRSTLIGHTHOUSE.AC.NZ

CONSULTANTS

TENNENT + BROWN ARCHITECTS
DUNNING THORNTON CONSULTANTS LTD
LEAP AUSTRALASIA LTD
SOUTHERN PERSPECTIVES / SOLAR CITY

CLIENT

U.S. DEPARTMENT OF ENERGY
SOLAR DECATHLON 2011
WWW.SOLARDECATHLON.GOV

U.S. DEPARTMENT OF ENERGY SOLAR DECATHLON

MARK	DATE	DESCRIPTION
CN	11-01-11	FOR CONSTRUCTION

LOT NUMBER:	LOT NUMBER
DRAWN BY:	Author
CHECKED BY:	Checker
COPYRIGHT:	

SHEET TITLE

ASSEMBLY SEQUENCE

O-106

8/13/2011 8:44:52 AM

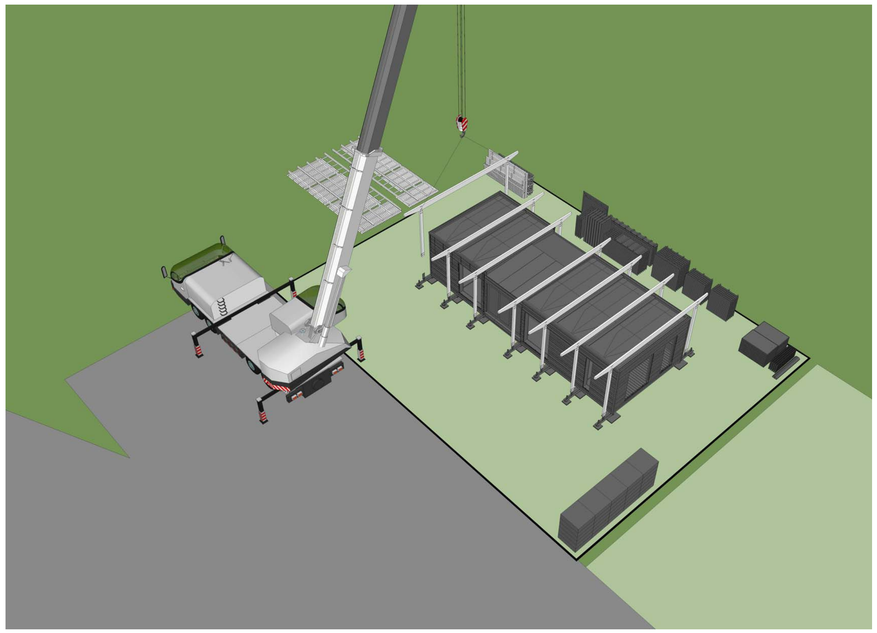

STEP 9 - CANOPY FRAME INSTALLATION & CANOPY PANEL ASSEMBLY

C1

- CANOPY FRAMES ARE CRANED INTO PLACE AND FIXED TO THE FOUNDATION SYSTEM

- CANOPY PANELS ARE ASSEMBLED ON GROUND IN THE DESIGNATED AREA AND PREPARED FOR LIFTING - REFER TO A-461 - A-480

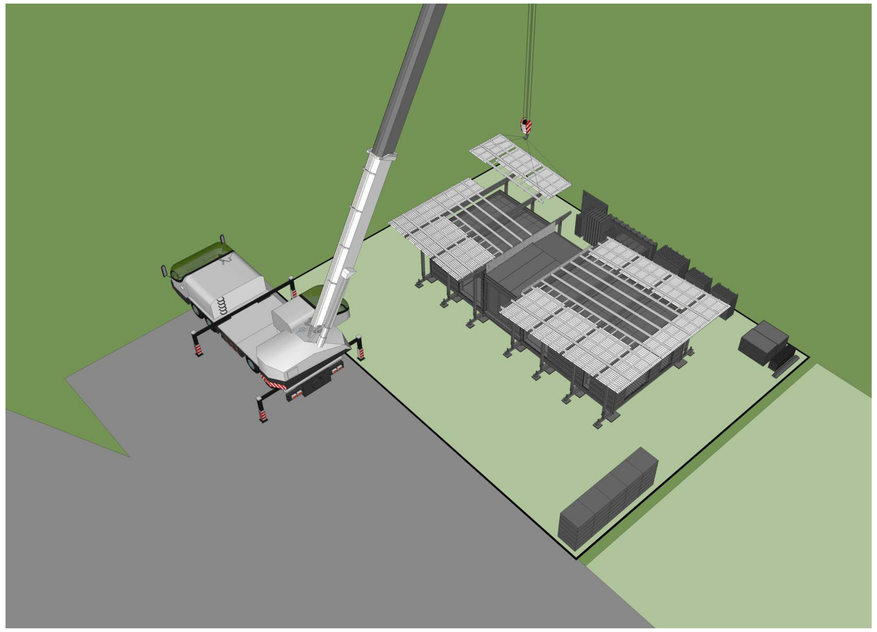

- CANOPY PANELS ARE CRANED INTO PLACE AND FIXED TO THE CANOPY FRAMES

STEP 10 - CANOPY PANEL INSTALLATION

A1

GENERAL SHEET NOTES

REFERENCE KEYNOTES

SHEET KEYNOTES

FIRST LIGHT NZ

TEAM NAME:	FIRST LIGHT
ADDRESS:	139 VIVIAN STREET TE ARO, WELLINGTON NEWZEALAND
CONTACT:	ELINUTTALL@GMAIL.COM WWW.FIRSTLIGHTHOUSE.AC.NZ

CONSULTANTS

TENNENT + BROWN ARCHITECTS
DUNNING THORNTON CONSULTANTS LTD
LEAP AUSTRALASIA LTD
SOUTHERN PERSPECTIVES / SOLAR CITY

CLIENT

U.S. DEPARTMENT OF ENERGY
SOLAR DECATHLON 2011
WWW.SOLARDECATHLON.GOV

U.S. DEPARTMENT OF ENERGY SOLAR DECATHLON

MARK	DATE	DESCRIPTION
CN	11-01-11	FOR CONSTRUCTION

LOT NUMBER:	LOT NUMBER
DRAWN BY:	Author
CHECKED BY:	Checker
COPYRIGHT:	

SHEET TITLE

ASSEMBLY SEQUENCE

O-107

8/13/2011 8:45:11 AM

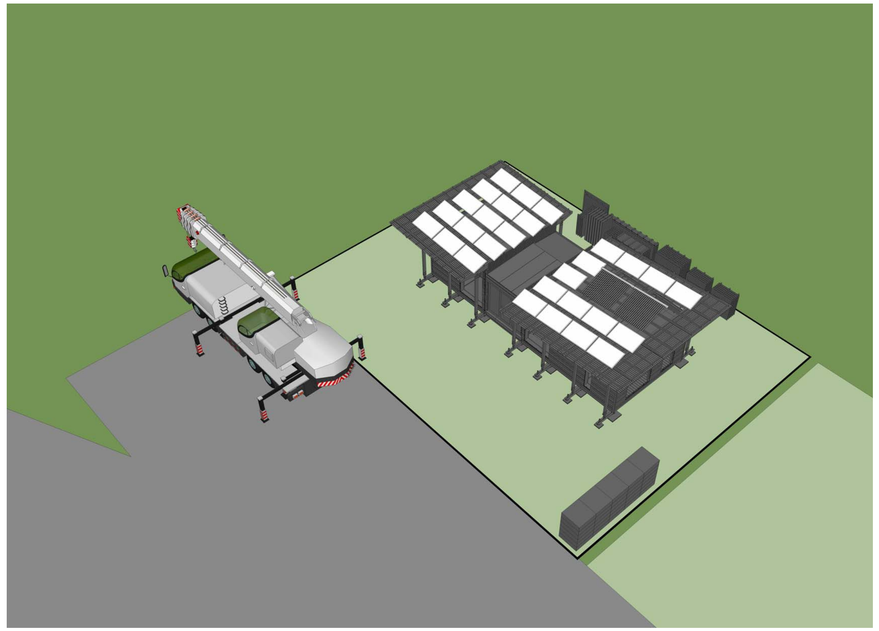

C1 STEP 11 - PV PANEL INSTALLATION

- CRANE PACKS UP AND LEAVES SITE
- PV PANEL SUPPORT FIXED TO INDIVIDUAL PV PANELS - REFER E-410 - E-414
- ASSEMBLED PV PANELS FIXED TO CANOPY STRUCTURE

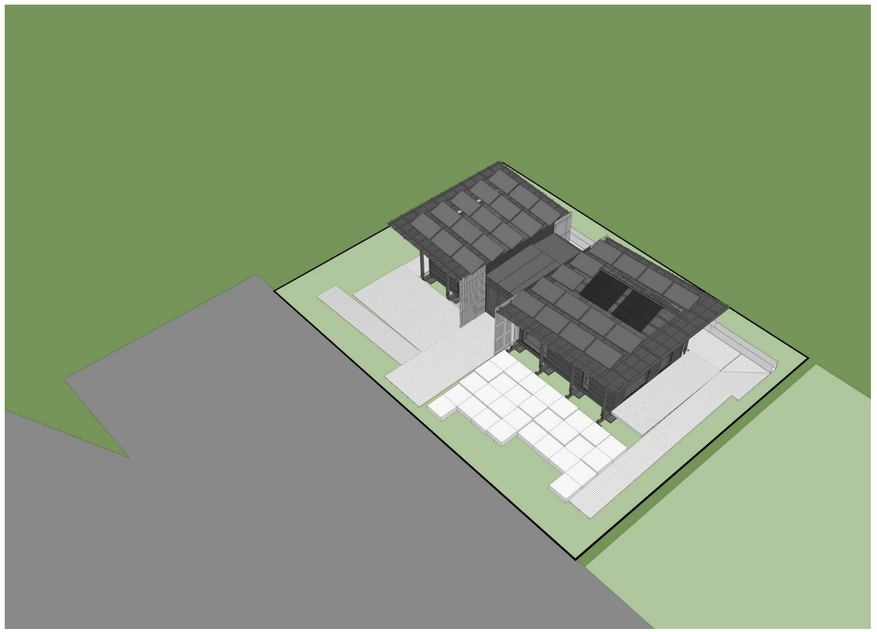

A1 STEP 12 - LANDSCAPE ASSEMBLY

- LANDSCAPE SUB-STRUCTURE IS ASSEMBLED - REFER L-102
- LEVELS ARE CHECKED WITH LASER LEVEL
- DECKING PANELS ARE INSTALLED AND FIXED TO SUB-STRUCTURE - REFER L-601 - L-609
- PLANTING IS PLACED IN THE DESIGNATED LANDSCAPE AREAS - REFER L-104
- SITE CLEAN UP

GENERAL SHEET NOTES

REFERENCE KEYNOTES

SHEET KEYNOTES

FIRST LIGHT NZ

TEAM NAME:	FIRST LIGHT
ADDRESS:	139 VIVIAN STREET TE ARO, WELLINGTON NEWZEALAND
CONTACT:	ELINUTTALL@GMAIL.COM WWW.FIRSTLIGHTHOUSE.AC.NZ

CONSULTANTS

TENNENT + BROWN ARCHITECTS
DUNNING THORNTON CONSULTANTS LTD
LEAP AUSTRALASIA LTD
SOUTHERN PERSPECTIVES / SOLAR CITY

CLIENT

U.S. DEPARTMENT OF ENERGY
SOLAR DECATHLON 2011
WWW.SOLARDECATHLON.GOV

U.S. DEPARTMENT OF ENERGY SOLAR DECATHLON

MARK	DATE	DESCRIPTION
CN	11-01-11	FOR CONSTRUCTION

LOT NUMBER:	LOT NUMBER
DRAWN BY:	Author
CHECKED BY:	Checker
COPYRIGHT:	

SHEET TITLE

ASSEMBLY SEQUENCE

O-108

8/13/2011 8:45:30 AM

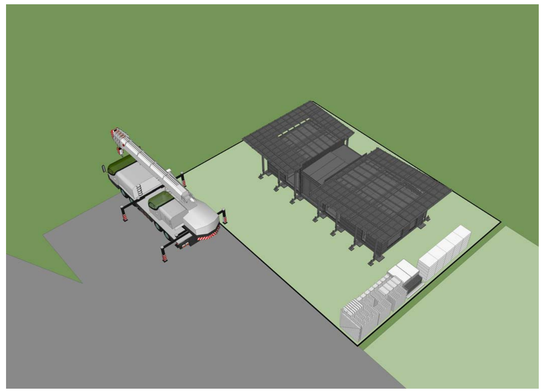

- LANDSCAPE PANELS DETACHED FROM SUBSTRUCTURE AND STACKED IN DESIGNATED AREA (REFER O-101 FOR LOCATION)

- LANDSCAPE SUBSTRUCTURE DISASSEMBLED AND STACKED IN DESIGNATED AREA

- PV PANEL SYSTEM DETACHED FROM CANOPY AND PANEL SUPPORTS REMOVED

- PV PANELS PACKAGED FOR TRANSPORT

- CRANE ARRIVES ONSITE (REFER O-101 FOR LOCATION) AND IS SET UP

D1 STEP 1 - LANDSCAPE AND PV PANEL DISASSEMBLY

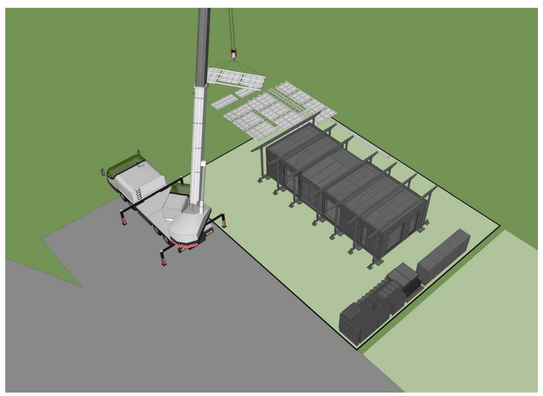

- CANOPY PANELS DETACHED FROM CANOPY FRAME AND CRANED TO DESIGNATED AREA (REFER O-101 FOR LOCATION)

- CANOPY PANELS DISASSEMBLED ON GROUND AND STACKED IN DESIGNATED AREA

B1 STEP 2 - CANOPY PANEL REMOVAL

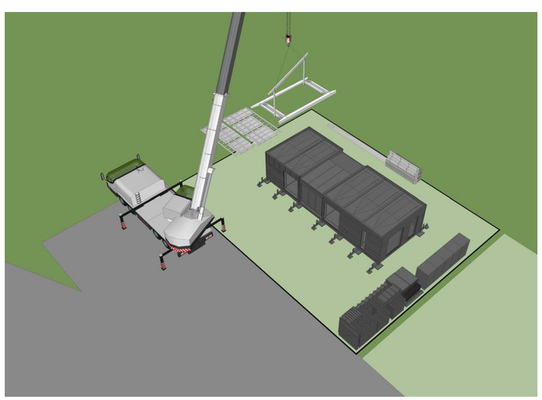

- CANOPY FRAMES DETACHED FROM FOUNDATION AND CRANED TO DESIGNATED AREA (REFER O-101 FOR LOCATION)

- CANOPY FRAMES DISASSEMBLED ON GROUND AND STACKED IN DESIGNATED AREA (REFER O-101 FOR LOCATION)

A1 STEP 3 - CANOPY FRAME REMOVAL

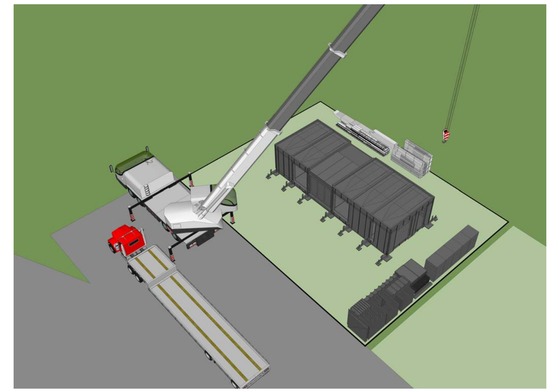

- CLADDING SYSTEM DETACHED FROM MODULES AND STACKED IN DESIGNATED AREA (REFER O-101 FOR LOCATION)

- TRUCK 2 ARRIVES ONSITE (REFER O-101 FOR LOCATION)

- CRANE PREPARES TO LIFT MODULE 6

D4 STEP 4 - CLADDING REMOVAL

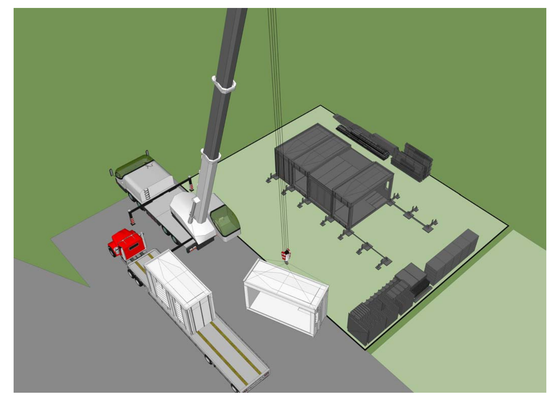

- MODULE 6 DETACHED FROM MODULE 5 AND FOUNDATION SYSTEM

- MODULE 6 CRANED ONTO TRUCK 2

- MODULE 5 DETACHED FROM MODULE 4 AND FOUNDATION SYSTEM

- MODULE 5 CRANED ONTO TRUCK 2

- TRUCK 2 LEAVES SITE

B4 STEP 5 - REMOVAL OF MODULES 5 & 6

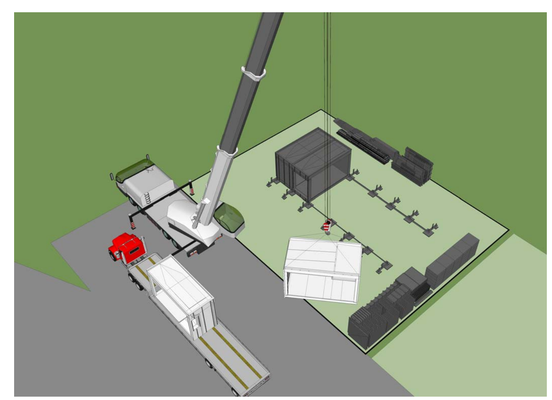

- TRUCK 3 ARRIVES ON SITE

- MODULE 4 DETACHED FROM MODULE 3 AND FOUNDATION SYSTEM

- MODULE 4 CRANED ONTO TRUCK 3

- MODULE 3 DETACHED FROM MODULE 2 AND FOUNDATION SYSTEM

- MODULE 3 CRANED ONTO TRUCK 3

- TRUCK 3 LEAVES SITE

A4 STEP 6 - REMOVAL OF MODULES 3 & 4

GENERAL SHEET NOTES

REFERENCE KEYNOTES

SHEET KEYNOTES

FIRST LIGHT NZ

TEAM NAME:	FIRST LIGHT
ADDRESS:	139 VIVIAN STREET TE ARO, WELLINGTON NEWZEALAND
CONTACT:	ELINUTTALL@GMAIL.COM WWW.FIRSTLIGHTHOUSE.AC.NZ

CONSULTANTS

TENNENT + BROWN ARCHITECTS
DUNNING THORNTON CONSULTANTS LTD
LEAP AUSTRALASIA LTD
SOUTHERN PERSPECTIVES / SOLAR CITY

CLIENT

U.S. DEPARTMENT OF ENERGY
SOLAR DECATHLON 2011
WWW.SOLARDECATHLON.GOV

U.S. DEPARTMENT OF ENERGY SOLAR DECATHLON

MARK	DATE	DESCRIPTION
CN	11-01-11	FOR CONSTRUCTION

LOT NUMBER:	LOT NUMBER
DRAWN BY:	Author
CHECKED BY:	Checker
COPYRIGHT:	

SHEET TITLE

DISSASSEMBLY SEQUENCE

O-109

8/13/2011 8:46:24 AM

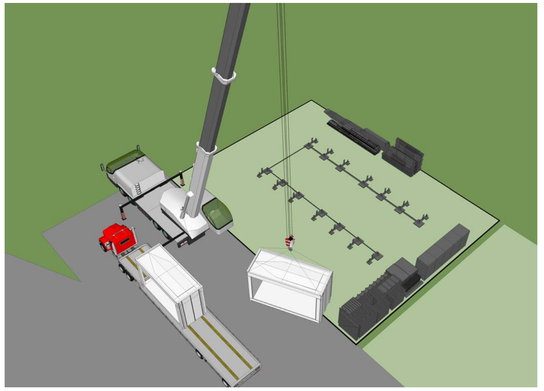

- TRUCK 4 ARRIVES ON SITE
- MODULE 2 DETACHED FROM MODULE 1 AND FOUNDATION SYSTEM
- MODULE 2 CRANED ONTO TRUCK 4
- MODULE 1 DETACHED FROM FOUNDATION SYSTEM
- MODULE 1 CRANED ONTO TRUCK 4
- TRUCK 4 LEAVES SITE

1 STEP 7 - REMOVAL OF MODULES 1 & 2

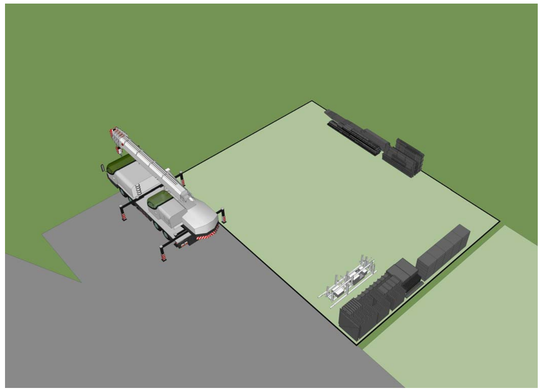

- CRANE PACKS UP AND LEAVES SITE
- FOUNDATION SYSTEM IS DISASSEMBLED AND STACKED IN DESIGNATED AREA (REFER O-101 FOR LOCATION)

2 STEP 8 - DISASSEMBLY OF FOUNDATION

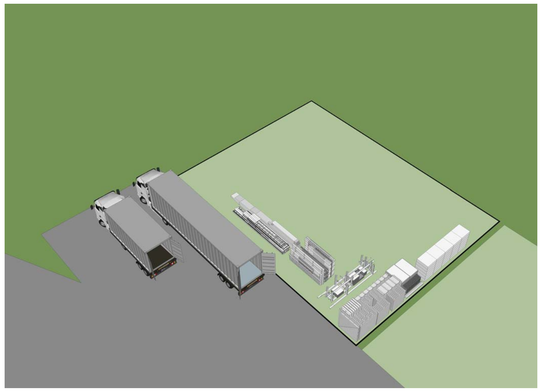

- TRUCKS 1 AND 5 ARRIVE ONSITE
- BUILDING COMPONENTS ARE PACKAGED INTO CONTAINERS IN PREDETERMINED ORDER
- FINAL SITE CLEAN UP
- TRUCKS 1 AND 5 LEAVE SITE

3 STEP 9 - PACKING SHIPPING CONTAINERS

8/13/2011 8:46:48 AM

GENERAL SHEET NOTES

REFERENCE KEYNOTES

SHEET KEYNOTES

FIRST LIGHT NZ

TEAM NAME:	FIRST LIGHT
ADDRESS:	139 VIVIAN STREET TE ARO, WELLINGTON NEWZEALAND
CONTACT:	ELINUTTALL@GMAIL.COM WWW.FIRSTLIGHTHOUSE.AC.NZ

CONSULTANTS

TENNENT + BROWN ARCHITECTS
DUNNING THORNTON CONSULTANTS LTD
LEAP AUSTRALASIA LTD
SOUTHERN PERSPECTIVES / SOLAR CITY

CLIENT

U.S. DEPARTMENT OF ENERGY
SOLAR DECATHLON 2011
WWW.SOLARDECATHLON.GOV

U.S. DEPARTMENT OF ENERGY SOLAR DECATHLON

MARK	DATE	DESCRIPTION
CN	11-01-11	FOR CONSTRUCTION

LOT NUMBER:	LOT NUMBER
DRAWN BY:	Author
CHECKED BY:	Checker

COPYRIGHT:

SHEET TITLE

DISSASSEMBLY SEQUENCE

O-110