ENCITY

Washington State University

Construction Specifications

08-10-17

Washington State University

U.S Department of Energy Solar Decathlon 2017

Construction Specifications
August 10 2017

Primary Contacts

Faculty Contact

Berry Family Solar Decathlon Director
Darrin Griechen
Washington State University
Pullman, WA, 99163
dgriechen@wsu.edu
(509) 230-5704

Project Manager

Grad Student - Project Manager
Timothy Goheen
Washington State University
Pullman, WA, 99163
timothy.goheen@wsu.edu
(218) 536-0051

Washington State University

U.S Department of Energy Solar Decathlon 2017

Construction Specifications Institute

August 10 2017

Student Team Leaders

Project Manager:	Timothy Goheen
Design Lead:	Michael Tremain
Engineering and Systems Lead:	Annalise Miller
Smarthome Tech Lead:	Dr. Leah Zulas/Sayonsom Chanda
Construction Lead:	Jeff Washburn
Health and Safety Officer:	Johnny Wang
Communications Lead:	Camren Richards

CONSTRUCTION SPECIFICATIONS

CONTENTS

DIVISION 01	**GENERAL REQUIREMENTS**
01 01 01	Project Title Page
01 12 00	Summary
01 60 00	Product Requirements
01 77 00	Closeout Procedures
DIVISION 02	**EXISTING CONDITIONS**
NOT USED	
DIVISION 03	**CONCRETE**
03 05 00	10'x100' 10mil Vapor Barrier
03 11 00	4'x8' Sheet Melamine
SDS	
03 11 16.13	100% Silicone Sealant
SDS	
03 49 00	Sakrete (5000 psi Concrete)
03 49 00	GFRC (Glass Fiber Reinforced Concrete)
Data Sheet	
SDS	
DIVISION 04	**MASONRY**
NOT USED	
DIVISION 05	**METALS**
05 05 23	Pier Tops
Catalog	
05 05 23	⅜" Straight Pencil Rod
Data Sheet	
05 05 23	⅛" x ¾"Long Galvanized Wood Screws
05 05 23	¼" x ¾"Lag Screws
05 05 23	1-½" Lag Screws
Data Sheet	
05 05 23	1-¾" Long Galvanized Wood Screw
05 00 00	¼" SS Washer
05 00 00	1-¼" 18 GA. Galvanized Brad Nails
05 00 00	¼" 20 SS Lock Washer
05 00 00	Simpson Angle Connector (A23 ZMAX)
Installation	
05 05 23	18'' Metal Concrete Form Stakes

05 05 23	12d Duplex Nail
05 05 23	1-¼” x 12” MSTA 12 Strap
05 05 23	¼” x 5” Hex Carriage Bolts
05 05 23	¼”x 5” 20 SS Hex Bolt
05 05 23	¼” 20 SS Hex Nut
05 05 23	⅜” Fender Washers
05 05 23	⅜” Square Washers
05 05 23	8Dx1-½” Nails
05 05 23	Chamfered Steel Dowel
05 05 23	10Dx1-½” Nails
05 05 23	¼” x 3” L Screws (Galvanized or SS)
05 05 23	5” SDS Screw
05 05 23	1-½” SDS Screw
05 05 23	1-½” SD#9 Screw
05 05 23	2-½” SDS Screw
05 05 23	8” SDS Screw
05 05 23	6” SDS Screw
05 05 23	5/16” x 3” Hex Bolt
05 05 23	Mid Clamp
05 05 23	Edge Clamp
05 05 23	Wire Clamp
05 10 00	L Foot
05 00 00	5/16” Washer
05 23 00	Truck Cable Clamp
Data Sheet	
05 23 00	Array Edge Screen Kit 4''x100'
Data Sheet	
05 50 00	Aluminum Diamond Plate (1/4 in. thick piano hinge, 45 in. length)
SDS	
05 50 00	Aluminum Diamond Plate (1/4 in. thick, piano hinge, 60 in.length)
05 73 15	Wire Rope Metal Railing
05 73 15	Wire Rope Fasteners
Installation Guide	
05 73 15	Wire Rope Metal Railing
05 73 15	Wire Rope Rail Leg Channel
05 73 16	⅜” Wire Tensioner
05 25 00	1-½” Z-Clip
Installation Guide	
05 25 00	Solar Mid-Clamp
Data Sheet	
Installation Guide	
05 25 00	Solar End-Clamp
05 10 00	Ground Lug Assembly

05 10 00	L Foot and Base Kit
05 14 00	Aluminum PV Rail Splice
05 14 00	Rail End Pieces
05 14 00	Aluminum PV Rail 6’
05 14 00	Aluminum PV Rail12’
05 14 00	Aluminum PV Rail18’
Data Sheet	
05 14 00	122” Aluminum PV Rail
05 14 00	162” Aluminum PV Rail
05 00 00	MSTA36Z Strap

DIVISION 06	**WOOD, PLASTICS, AND COMPOSITE**
06 05 23	Simpson VGT Hold Down
Catalog	
06 05 23	Simpson PAB Anchor Bolt
Catalog	
06 05 23	Strong Drive SDSW screws
06 05 23	Simpson Hardware
06 05 23	Simpson Hardware
06 05 23	Simpson Hardware
06 05 23	A35
06 11 13	CLT Panels
Catalog	
06 11 13	CLT Wall (Club House)
06 11 13	CLT Ceiling Panels
06 11 13	CLT Floor Panels
06 11 16	4” x ½” x 8” Baltic Birch
06 11 16	2” wooden shim panels
06 11 16	2” x 6” x 8’ Cedar
SDS	
06 11 16	2” x 6” x 10’ Cedar
06 11 16	2” x 6” x 12’ Cedar
06 11 16	2” x 6” x 16’ Cedar
06 11 16	2 x 6 Deck Framing
06 15 00	WSU Extruded Composite Decking
06 16 36	½” Exterior Plywood Sheathing
SDS	
06 16 36	¾” Exterior Plywood Sheathing
06 16 33	Tile Backer
Data Sheet	
SDS	
06 16 63	Hardie Panel
06 41 00	½” APX Plywood

06 41 00	¾” APX Plywood
06 41 00	Grass Tiomos 110 Concealed Euro Hinges
06 41 00	Knape and Vogt 20" Self-Closing Drawer Slides
Data Sheet	
Installation	
06 41 00	Poly Base Fixed Stud Glides (For Casework)
06 41 00	Poly Base Fixed Stud Glides (For Planter)
06 41 00	5/16"-18 Steel Narrow-Base Weld Nut
06 41 00	US Futaba 8" x 5" Workstation Bracket

DIVISION 07	**THERMAL AND MOISTURE PROTECTION**
07 21 13.19	Mineral Board Insulation
Data Sheet	
SDS	
07 46 23	1x6 Cedar Board Shiplap Siding
07 46 23	1x6 Cedar Board Siding
07 27 26	Fluid Applied Vapor Barrier
Data Sheet	
SDS	
07 77 00	Siding Vent (And Roof Vent)
07 92 00	Fast Flash
Data Sheet	
SDS	
07 92 00	Joint and Seam Filler
Data Sheet	
SDS	
07 92 00	(R-Guard) Air Dam (Around Windows)
Data Sheet	
SDS	
07 62 00	Metal Apron Flashing
07 62 00	Roof Edge Flashing
07 62 00	Z-metal 2” x 2” x 12’
07 62 00	1-½” Deep Metal Z Flashing
07 62 00	¾” Deep J Channel Flashing
07 50 00	Single Ply Roof Membrane
Data Sheet	
07 21 00	6" Roxul TopRock DD Roofing Insulation
Data Sheet	
SDS	
07 21 00	6" Roxul TopRock Roofing
07 46 23	HardiePanel Siding
07 21 16	Batt Insulation

Data Sheet	
07 71 23	Sheet Aluminum Flashing (Custom Metal Gutters)
Data Sheet	
07 71 23	Sheet Aluminum Flashing (Custom Light Fixtures)
07 71 23	Black Square Aluminum Downspout

DIVISION 08	**OPENINGS**
08 10 00	Doors
08 10 00	Exterior Outswing Door
08 10 00	Exterior Double Outswing Door
08 10 00	Interior Swing Door
08 10 00	Pocket/Hanging Door
08 10 00	Pocket/Hanging Door track wheels
08 51 00	Metal Framed Windows
08 51 13	Aluminum Framed Windows
08 63 00	Metal Framed Skylights
08 63 53	Motorized Skylight
08 71 00	Door Hinges (Mechanical Room)
Catalog	

DIVISION 09	**FINISHES**
09 30 13	3”x12” Ceramic Tile
Installation Guide	
SDS	
09 30 13	12”x12” Ceramic Floor Tile (Bathrooms)
09 30 13	2”x6” Ceramic Bullnose Tile
09 93 23.13	White Interior Stain (100SF/Quart)
SDS	
09 93 13.53	Natural Oil (175-500Sf/Gal)
Data Sheet	
Installation Guide	
SDS	

DIVISION 10	**SPECIALITIES**
10 14 16	Sponsorship Plaques
10 14 23	Sponsorship Panels
10 22 13	Steel Wire Mesh
10 28 23.13	Iron
10 28 23.13	Ironing Board
11 31 13	Kitchen Supplies
10 21 19.16	Shower Doors (Shower Screen)
10 44 16.13	Fire Extinguisher (2A - 10BC - Small)
10 44 16.13	Fire Extinguisher (2A - 10BC - Large For Construction)

10 56 16	Shelves

DIVISION 11	**EQUIPTMENT**
11 28 13	Computer
11 28 13	Tablet
11 29 13	Laptop
11 30 00	Kitchen Towel
11 30 00	Kitchen Cloth
11 30 00	Oven Mitt
11 30 00	Pot Holder
11 31 00	Residential Appliances
11 31 13	Dishwasher (Compact)
Data Sheet	
Installation Guide	
11 31 13	Dishwasher
Data Sheet	
Installation Guide	
11 31 13	Convection Microwave Oven (HMB5051)
Data Sheet	
Installation Guide	
11 31 13	Convection Microwave Oven (HMV8053U)
Data Sheet	
Installation Guide	
11 31 13	Electric Wall Oven
Data Sheet	
Installation Guide	
11 31 13	Induction Cooktop (Thermador)
Data Sheet	
Installation Guide	
11 31 13	Induction Cooktop (Summit)
Data Sheet	
11 31 13	Downdraft Ventilator
Data Sheet	
Installation Guide	
11 31 13	Downdraft recirculation unit
Data Sheet	
Installation Manual	
11 31 13	Downdraft Internal Blower
Data Sheet	
11 31 13	Toaster
11 31 13	Refrigerator+Freezer

	Data Sheet
	Installation Guide
11 31 23	Washer
	Data Sheet
	Installation Guide
11 31 23	Dryer
	Data Sheet
	Installation Guide
11 42 00	Kitchen Cook Set
11 52 00	40”-50” 4k TV
11 52 00	TV Mount
11 81 13	Bathroom Trash Can
11 81 13	Bathroom Trash Lid
11 81 13	Bathroom Trash Liner
DIVISION 12	**FURNISHINGS**
12 35 53.19	Floating Shelf
12 35 30.23	Bathroom Vanity
12 35 30.23	Bathroom Tall Cabinet
12 35 30.23	36”x36” Bathroom Mirrors
12 35 30.23	Bathroom Medicine Cabinet
12 35 30.23	3-Bin Rotating Corner Recycling Center
	Data Sheet
	Installation Guide
12 35 30.23	2-Bin Waste and Recycling Unit
	Installation Guide
12 36 00	Paperstone (Countertop) 24" W
	Data Sheet
12 36 00	Paperstone (Countertop) 36" W
12 36 00	Paperstone Cap 4" W
12 42 00	Glassware (San Marino)
12 42 00	Place Mat
12 42 00	Glassware (Pure Cabernet)
12 43 13.13	Desk Lamp
12 44 00	Towel Ring/Rack Hand Towel
	Installation Guide
12 44 00	Towel Rack Shower Towel
	Data Sheet
	Installation Guide
12 44 00	Toilet Paper Holder
	Installation Guide
12 44 13.16	Bath towel

12 44 13.16	Hand Towel
12 44 13.16	Wash Cloth
12 44 13.13	Bath Mat
12 45 00	Mattress
12 45 16	Pillow
12 45 13	Sheets
12 45 13.16	Comforter
12 46 00	Bed Storage Gas Piston
12 52 13	Bar Stools
12 52 13	Indoor Diner Chairs
12 52 83	Custom Seating Units
12 54 13	Desk Chair
12 58 19	Dining Table
12 58 16	Chairs/Sofa
12 90 00	Shampoo
12 90 00	Body Lotion
12 90 00	Facial Bar
12 90 00	Bath Bar

DIVISIONS 13 **SPECIAL CONSTRUCTION**

NOT USED

DIVISIONS 14 **CONVEYING EQUIPMENT**

NOT USED

DIVISION 21 **FIRE SUPPRESSION**

21 13 13	Fire Sprinkler Manifold
21 13 13	Residential Sprinkler 16x16
21 13 13	Residential Sprinkler 14x14
21 13 13	Residential Sprinkler 12x12

Catalog
Data Sheet
Installation Guide

DIVISION 22 **PLUMBING**

22 05 19 Water Meter

Catalog
Installation Guide

22 05 19 Pex-A Sharkbite Pipe Fittings/Connections/Etc

Catalog
Installation Guide

22 05 19	1 ¼ - 1 ¼” 90° elbows
22 05 19	1 ¼ - 1 ¼” T
22 05 19	¾ - ¾"' 90° elbows

22 05 19	½ - ½"' 90° elbows
22 05 19	¾ - ¾" side outlet elbow
22 05 19	¾ female connections
22 05 19	¾ - ¾" T
22 05 19	½ - ½" T
22 05 19	3/4" Ball valve with drain/vent
22 05 19	1/2" Ball valve
22 05 19	Toilet Connection Kit
22 05 19	Faucet Connection Kit
22 05 19	Water Heater Connection Kit
22 05 19	Dishwasher Elbow
22 05 19	1/2" - 3/4" reducing coupling
22 05 19	Washing Machine Outlet Box Kit w/ Water hammer arrestors
22 05 19	1 1/4" Female connection
22 05 19	1/2" Male connection
22 05 19	1/2" Female connection
22 05 19	Disconnect Clip 1/2"
22 05 19	Disconnect Clip 3/4"
22 05 19	Disconnect Tongs 1/2"
22 05 19	Disconnect Tongs 3/4"
22 05 19	Pex tubing cutters
22 05 19	Deburr & Gauge tool
22 05 19	Pressure Gauge (fits 1-¼" Pex) -
22 05 23	1 ¼ - 1 ¼" Ball Valve
	Catalog
	Installation Guide
22 05 23	1 ¼" FNTP Inline Lockable Ball Valve -
22 05 23	Double Check Backflow Prevension Valve - 1-¼" LF007 -
22 05 23	¾" Stop and Waste Valve
22 11 13	Plumbing Manifold
	Data Sheet
	Installation Guide
22 11 16	1-1/4" Pex-A White
22 11 16	1-1/4" Pex-A Blue
22 11 16.01	1-½" ABS Pipe
	Brochure
	Installation Guide
	SDS
22 11 16.02	2" ABS Pipe
22 11 16.03	3" ABS Pipe
22 11 16.10	ABS Plumbing Cement
	SDS

22 11 16.10	3” 90deg elbow w/radius
22 11 16.10	3” T
22 11 16.10	3” - 3”’ - 1 ½” T
22 11 16.10	1 ½” 90deg radius
22 11 16.10	2” 90deg w/radius
22 11 16.10	2” T
22 11 16.10	3” to ½” connector
22 11 16.10	3” Clean Out
22 11 16.10	2” Clean Out
22 11 16.10	2” Pee Trap
22 11 16.10	1 ½” Pee Trap
22 11 16.10	1 1/2" - 2" Y
22 11 16.10	2” Y
22 11 16.10	3” Y
22 11 16.10	2” - 3” connector
22 11 16.10	1 ½” - 2” connector
22 11 16	2” Overflow Pipe
22 11 16	Filter Drain Top
22 11 16	1” Drain Pipe
22 11 16	Connectors
22 11 16	Spaghetti Noodle Irrigation Pipe
22 11 16	SNI Drippers
22 11 16	SNI T Connectors
22 11 16	SNI Connectors
22 11 16	¾” Pex-A Insulated
22 11 16	¾” Pex-A Blue
22 11 16	½” Pex-A Insulated
22 11 16	½” Pex-A Blue
22 11 19	Hose Bibb
22 11 23	Booster Pump
22 12 00	20 Gallon Pressure Tank
Manual	
22 33 30.13	WH (Electric) 19.9gal
Data Sheet	
22 11 23	HW Recirculation Pump
Installation Guide	
22 33 30.26	WH (Electric w/Heat Pump) 43gal
Installation Guide	
22 30 00	1-¼” Watts Direct Acting Water Pressure Reducing Valve - LF25AUB
Catalog	
22 35 43	Greywater Heat Exchanger
Installation Guide	
22 41 00	Residential Plumbing Fixtures

22 41 00	Shower Head, Hose, and Handle
22 41 00	Floor Drain
Data Sheet	
Installation Guide	
22 41 13	Water Closet - Floor Mount
22 41 16	Lavatory - Wall Mounted
Installation Guide	
22 41 16	Sink - Under Counter 1 Basin
Data Sheet	
Installation Guide	
22 41 16	Sink - Under Counter 2 Basin
Data Sheet	
22 41 16	E-Bracket Stabilizer For Stainless Steel Sinks
22 41 16	E-Bracket Stabilizer For Stainless Steel Sinks
22 41 16	Neoprene Rubber Commercial Grade 60A +/-5 .062" Thick X 1" Wide X 10' Feet Long
22 41 16	Kitchen Sink Drain w/ Strainer
Data Sheet	
22 41 23	Shower Base
22 41 39	Lavatory Faucet
22 41 39	ABS Standpipe
22 41 39	Pull-down Kitchen Sink Faucet
Installation Guide	
DIVISION 23	**HEATING, VENTILATING, AND AIR CONDITIONING**
23 09 13	Indoor Temp. and Humidity Sensors
Data Sheet	
Installation Guide	
23 09 93	HRV - Heat Recovery Ventilator
Data Sheet	
Installation Guide	
23 09 93	HRV - Heat Recovery Ventilator (function as exhaust fan for total house exhaust)
23 30 00	Air Quality Sensors (CO2)
Catalog	
23 73 23	Mini Split HVAC System
Data Sheet	
DIVISION 25	**INTEGRATED AUTOMATION**
25 11 16	Smart Home Hub
Data Sheet	
Installation Guide	
25 11 16	Cellular Modem

25 35 16	Motion/Daylight/Moisture (prefered)
Data Sheet	
Installation Guide	
25 35 16	Motion Sensor Relay
25 35 16	Door Sensor
Data Sheet	
Installation Guide	
25 35 16	Daylight Sensors
Data Sheet	
25 36 13	Electric Smart Meter
Data Sheet	
25 36 13	Electric Sub Meters
25 55 00	Window Pressure Sensor
	Weather Station

DIVISION 26	**ELECTRICAL**
26 05 19	ADA Compliant Cable Protector
26 05 19	Electric Wiring - all wiring
Catalog	
26 05 19	14/4 quick connection
26 05 19	Stage pin 20A, 125 V (14/2 and 12/2 wire connections)
26 05 19	#4, #6, and #8 single pole cam connections
26 05 19	14/3 quick connect clip
26 05 19	2/0 splice
26 05 19	4/0 splice
26 05 19	#10 insulated splice kit
26 05 19	#12 crimps
26 05 19	20 Amp 125 Volt stage pin connection
26 05 26	Grounding Electrode Conductor
26 05 29	Electrical Staples
26 05 29	Wire Crimps
26 05 29	Multi-Tool Stripper/Crimper
25 05 29	Multimeter - Fluke
Data Sheet	
25 05 29	Clamp Meter
Data Sheet	
25 05 29	Zip-Ties
25 05 29	Wire Nuts
25 05 29	Walkerflex Cable System
25 05 29	Electrical Straps
25 05 29	Heat Shrink Tubing
Data Sheet	
25 05 29	3'' Electrical conduit clips

26 05 33	Junction Box
Data Sheet	
Catalog	
26 05 33	2 Gang Non-Metallic Outlet Box
Data Sheet	
26 05 33	1 Gang Non-Metallic Outlet Box
Data Sheet	
26 05 43	½” non-Metallic Conduit
26 05 43	3/4" non-metallic conduit
26 05 43	1'' non-metallic conduit
26 05 43	½” Conduit Clamps Exterior
26 05 43	½” Conduit Clips
26 05 43	3/4" conduit clips
26 05 43	1'' conduit clips
26 05 43	3" Fiberglass Conduit 90deg
26 05 43	3" Fiberglass Conduit T
26 05 43	3" Fiberglass Conduit Sleeve
26 05 43	3'' Fiberglass Conduit
26 05 43	3'' Fiberglass conduits (Cross)
26 05 43	3'' Electrical metal conduit straps
26 09 24	Wireless Switches
Data Sheet	
Installation Guide	
26 24 16	Main Distribution Panel (MDP)
26 24 16	Tiny Home Subpanel
26 24 16	Community Subpanel
26 24 16	Outlet 120 Duplex (Wall, GFCI, UCTR, GFCI CTR)
26 27 26	Outlet 120 Duplex Floor
Instructions	
Cut Sheet	
26 27 26	Outlet 120 Duplex WeatherProt.
26 27 26	Outlet 240 Single
Data Sheet	
Installation Guide	
26 27 26	Outlet Sensors
26 27 00	DC Light Microcontrollers
Data Sheet	
26 28 16	60 A Breaker
26 28 16	40 A GFCI Breaker
GFCI - Catalog	
GFCI - Installation Guide	

26 28 16	40 A Breaker
26 28 16	30 A GFCI
26 28 16	25 A Breaker
26 28 16	20 A GFCI/AFCI Combo Breaker
AFCI - Data Sheet	
AFCI - Installation Guide	
26 28 16	20 A Breaker
26 28 16	15 A GFCI/AFCI Combo Breaker
26 28 16	15 A Breaker
26 28 16	150 A Breaker
26 28 16	PV Array OCPD/Disconnect
Data Sheet	
26 28 16	Breakers (OutBack GSLC AC Breakers, 240 / 120 1 Ph, Output 2x 60A)
26 33 13	Battery System (12 qty) 200nc
Battery System - Data	
26 33 13	Inverter
Inverter - Data	
26 33 13	Batteries
Batteries - Data	
26 33 13	Battery Rack
Battery Rack - Data	
26 33 13	Combiner Box
26 33 13	Monitor & Control
Optics RE Info	
Charge Controller - Data (Note, Outback is releasing a new power charger that supports up to 8 solar panels in a string.)	
26 51 00	LED Strip Lighting (DC)
26 51 13	Light Bulb
26 51 13	LED Chandelier Lighting (DC)
DIVISION 27	**COMMUNICATIONS**
27 21 13	Firewall
27 21 16	Wireless Network Router
DIVISION 28	**ELECTRONIC SAFETY AND SECURITY**
28 31 46	Smoke Alarm
Data	
DIVISION 31	**EARTHWORK**
31 23 23.43	Geofoam
Data	
SDS	
31 23 23	Insulgrip Plates

Data Sheet	
31 23 23.33	Flowable Fill (Leveling Pad)
Data Sheet	
31 23 33	Gravel River Rock

DIVISION 32	**EXTERIOR IMPROVEMENTS**
32 93 00	Green Wall
Data Sheet	
32 32 00	Slip Sheet
Data Sheet	
	Edge Retainer Strip
32 93 13	Autumn Moor Grass (1 gal containers)
32 93 13	Pink Muhly Grass (3 gal containers)
32 93 13	Lemon Balm
32 93 13	Common Sage
32 93 13	Ribbon Grass
32 93 13	John Creech Sedum
32 93 13	Green Creeping Jenny
32 93 13	Yellow Creeping Jenny
32 93 13	Royal Fern
32 93 23	Wall Germander
32 93 23	Parsley
32 93 23	Basil
32 93 33	Red Twig Dogwood
32 93 33	Yellow Twig Dogwood
32 93 33	Dwarf Dogwood
32 93 33	Inkberry
32 93 33	Blue Holly
32 93 43	Sugar Maple
32 00 00	Gravel (Grade 57)
32 91 19.13	Mulch

DIVISION 33	**UTILITIES**
33 10 00	Greywater Treatment System
33 10 00	Potable Water Bladder (1500GAL)
Data Sheet	
33 10 00	Waste Water Bladder (500GAL)

Berg Pillow Water Bladders - Data Sheet
https://www.readycontainment.com/products/bladder-tanks/military-fuel-water-bladders/
http://www.bergco.com/pillow-tank.html

DIVISION 41	**Material Processing and Handling**
41 62 19	Flatbed Truck Transportation

41 62 23	Gradal

DIVISION 48	**ELECTRICAL POWER GENERATION**
48 14 00	Solar Power System
48 14 13	Solar Panels (Itek 290 SE Modules)
Data Sheet	
Cut Sheet	
Install	
48 19 16	PV Inverter (s) (w/ Battery system see 26 33 00)
48 19 13	Solar Charge Controller (w/ Battery system see 26 33 00)

MISCELLANEOUS/TO BE ORGANIZED

	Tesla Roadster
	10mil Vapor Barrier(Isolation Layer)
	Landscape
	Deck Pier- Adjustable 16” Perimeter
	Deck Pier- Adjustable 16” Standard
	Deck Pier- Adjustable 12” Standard
	Deck Pier- Adjustable 10” Standard
	Deck Pier- Adjustable 10” Perimeter
	Deck Pier- Adjustable 6” Perimeter
	Custom Deck Pier
	Rainbird Irrigation System
	Dust Masks
	Gloves
	Ear Plugs/Muffs
	Nontoxic (and Biodegradable) Soap and Cleaning Products
	First Aid Kits
08 79 13	Tool Storage Unit
41 62 23	Fork Lift?
41 62 19	Flatbed Truck Transportation
41 62 29	Container Truck
	Paint Brushes
	Sander/Scrub Brush for Shou Sugi Ban
	Dunnage/Transporation Racks
	Tesla Roadster
	Eye Protection
	Dust Masks
	Gloves
	Ear Plugs/Muffs
	Nontoxic (and Biodegradable) Soap and Cleaning Products

SECTION 01 01 01
PROJECT TITLE PAGE

TITLE : TEAM WSU, SOLAR DECATHLON 2017: EnCity

Washington State University

Projected Completion Date :
October 2017

Team Headquarters :
PACCAR Building, 2001 Grimes Way, Pullman, WA, 99163
T : (509) 230-5704

Project Leaders / Faculty Advisors:
Timothy Goheen / Darrin Griechen

Team WSU Website :
www.solardec.wsu.edu
www.solardec.wsu.edu/mobile

Team WSU Contact :
dgriechen@wsu.edu
timothy.goheen@wsu.edu

SECTION 01 12 00

SUMMARY

PART 1 - GENERAL

1.01 PROJECT INFORMATION SUMMARY

A. This section includes the following:
   1. Work covered by the documents.
   2. Specification formats and conventions.

B. This set of documents, including the Drawings, Specifications, and other data provided, is an incomplete representation of the project. Pricing the project using these documents will result in an estimate that may be more or less than the price for the project when the documents are complete. Commencing or pursuing construction activities using these documents, including ordering of materials or systems, is not permitted.

1.02 WORK COVERED BY CONTRACT DOCUMENTS

A. Project Identification : EnCity, a project of Washington State University

B. Owner: Board of Trustees, Washington State University

C. The work consists of the following:
   1. The work includes a small 1-2 person home and a larger community center, designed to break down with a flat pack system to fit on the flatbed of a semi trailer and be secured for highway transportation. Work includes structure, interior, and exterior finishes, fixtures, appliances, and electrical, mechanical, and plumbing systems. Work also includes some exterior work which serves to complete the water and utility systems for the home.
   2. The owner desires to have a minimal impact on the environment by using red list free products and building the structure from recycled or renewable materials.

1.03 SPECIFICATION FORMATS AND CONVENTIONS

A. Specification Format : The specifications are organized into divisions and sections using the 50-division format and CSI's MasterFormat 2004 numbering system.

PART 2 - PRODUCTS (NOT USED)

PART 3 - EXECUTION (NOT USED)

END OF SECTION 01 12 00

SECTION 01 60 00
PRODUCT REQUIREMENTS

Part I - General

1.1 Summary

A. This section includes the following information and procedural requirements: EnCity's goals in selection of products for use in this project; product delivery, storage, and handling; manufacturers' standard warranties on products; special warranties; product substitutions; and comparable products.

B. Related Sections include the following:

1. Division 1 Section "References" for applicable industry standards for products specified.
2. Division 1 Section "Closeout Procedures" for submitting warranties for contract closeout.
3. Divisions 2 through 16 Sections for specific requirements for warranties on products and installations specified to be warranted.

1.2 DEFINITIONS

A. Products: Items purchased for incorporating into the Work, whether purchased for Project or taken from previously purchased stock. The term "product" includes the terms "material," "equipment," "system," and terms of similar intent.

1. Named Products: Items identified by manufacturer's product name, including make or model number or other designation, shown or listed in manufacturer's published product literature, that is current as of date of the Contract Documents.
2. New Products: Items that have not previously been incorporated into another project or facility, except that products consisting of recycled-content materials are allowed, unless explicitly stated otherwise. Products salvaged or recycled from other projects are not considered new products.
3. Comparable Product: Product that is demonstrated and approved through submittal process, or where indicated as a product substitution, to have the indicated qualities related to type, function, dimension, in-service performance, physical properties, appearance, and other characteristics that equal or exceed those of specified product.

B. Substitutions: Changes in products, materials, equipment, and methods of construction from those required by the Contract Documents by team EnCity.

C. Basis-of-Design Product Specification: Where a specific manufacturer's product is named and accompanied by the words "basis of design," including make or model number or other designation, to establish the significant qualities related to type, function, dimension, in- service performance, physical properties, appearance, and other characteristics for purposes of evaluating comparable products of other named manufacturers.

D. Manufacturer's Warranty: Preprinted written warranty published by individual manufacturer for a particular product and specifically endorsed by manufacturer to Owner.

E. Special Warranty: Written warranty required by or incorporated into the Contract Documents, either to extend time limit provided by manufacturer's warranty or to provide more rights for Owner.

1.3 SUBMITTALS

A. Product List: Maintain a list on site or accessible online of products ordered, products received, and products already used. Include on this list quantities and which building/location the material is designated for.

B. Cost Reporting: All costs of materials provided are to be tracked for calculating the final project cost.

1. Form: Tabulate information for each product under the following column headings:
   a. Specification Section number and title.
   b. Generic name used in the Contract Documents.
   c. Proprietary name, model number, and similar designations.
   d. Manufacturer's name and address.
   e. Supplier's name and address.
   f. Installer's name and address.

B. Substitution Requirements and Procedure: Substitutions may be made by EnCity's team with approval of Darrin Griechen the faculty advisor. Elements shall not be substituted that affect the project's critical design elements such as the structural and electrical systems.

1.4 PRODUCT DELIVERY, STORAGE, AND HANDLING

A. Deliver, store, and handle products using means and methods that will prevent damage, deterioration, and loss, including theft. Comply with manufacturer's written instructions.

1. Schedule delivery to minimize long-term storage at Project site and to prevent overcrowding of construction spaces.
2. Deliver products to Project site in an undamaged condition in manufacturer's original sealed container or other packaging system, complete with labels and instructions for handling, storing, unpacking, protecting, and installing.
3. Inspect products on delivery to ensure compliance with the Contract Documents and to ensure that products are undamaged and properly protected.
4. Store products to allow for inspection and measurement of quantity or counting of units.
5. Store materials in a manner that will not endanger Project structure.
6. Store products that are subject to damage by the elements, under cover in a weathertight enclosure above ground, with ventilation adequate to prevent condensation.
7. Comply with product manufacturer's written instructions for temperature, humidity, ventilation, and weather-protection requirements for storage.
8. Protect stored products from damage.

B. Storage: Provide a secure location and enclosure at Project site for storage of materials and equipment by Owner's construction forces. Coordinate location with WSU CMEC supervisors.

1.6 PRODUCT WARRANTIES

A. Follow manufacturers requirements for warranty except where done towards our innovations.

1. Manufacturer's Standard Form: Modified to include Project-specific information and properly executed.
2. Refer to Divisions 2 through 16 Sections for specific content requirements and particular requirements for submitting special warranties.

B. Warranty Documentation: Compile a binder or document containing a comprehensive list of warranty information and a summary list of requirements to maintain warranty.

C. Submittal Time: Comply with requirements in Division 1 Section "Closeout Procedures."

PART 2 - PRODUCTS

2.1 PRODUCT OPTIONS

A. General Product Requirements: Provide products that comply with the Contract Documents, that are undamaged, and unless otherwise indicated, that are new at time of installation.

B. Product Selection Procedures: Procedures for product selection included the following:

1. Products must not include items on the Red List of the Living Building Challenge unless an alternate product is deemed unfeasible by EnCity's leads.

2. Products were selected beginning with locally sourced materials, but were finally selected based on sponsor's willingness and ability to donate.

PART 3 - EXECUTION

(Not Used)

END OF SECTION

SECTION 03 49 00

Cast In Place (Raised Floor Tiles)

5000 PLUS CONCRETE MIX

SINCE SAKRETE 1936

◆ The Pro's Choice Since 1936

Sakrete® 5000 Plus High Strength Concrete Mix is a professional grade blend of portland cement, sand and gravel that is formulated to reach strength quicker and for superior durability. For repair and building jobs where concrete thickness exceeds 2" (51 mm).

Features:

- High Strength 5,000 psi
- Full depth applications 2" (51 mm) or greater
- Ideal for structural applications requiring a small volume of concrete
- Rapid setting ready for foot traffic in 12 hours
- Faster strength gain than normal concrete in cold weather

Use For:

- Driveways, slabs, patios, walkways
- Curbs
- Stairs
- Ramps
- Setting fence posts
- Foundation walls and footings
- Countertops

Yield/Water/Coverage:

Bag Size	Yield	Water
60 lb (27.2 kg)	0.45 ft^3 (.013 m^3)	2.5 qt (2.4 L)
80 lb (36.3 kg)	0.6 ft^3 (.016 m^3)	3.5 qt (3.3 L)

To determine coverage: Multiply Length (feet) x Width (feet) x Thickness (inches) and divide by 12. Then divide by the yield in the chart above to determine the numbers of bags needed. See Calculator on Sakrete.com for assistance.
Yield and water are approximate.

Technical Data:

Sakrete 5000 Plus High Strength Concrete Mix meets or exceeds the compressive strength requirements of ASTM C387.
Compressive Strength ASTM C39

3 days = 2,500 psi (17 MPa)
7 days = 3,500 psi (28 MPa)
28 days = 5,000 psi (34 MPa)
Slump Range = 2" - 3" (50 - 75 mm)

DIVISION 3
Structural Concrete – 03 31 00

Color:

Gray

Preparation/Application:

For best results all materials should be stored between 40°F (4°C) and 80°F (27°C) 24 hours prior to installation.

Refer to:
- ACI 302.1 Guide for Concrete Flooring and Slab Construction
- ACI 305R Guide to Hot Weather Concreting
- ACI 306R Guide to Cold Weather Concreting

Flatwork (Slabs, sidewalks, walkways, etc.):

1. Stake out the area where the concrete will be placed.
2. Cut and remove all soil, grass, sod, etc.
3. For improved drainage place several inches of gravel into the excavated area. Remember to allow enough depth for both the gravel and a minimum of 4" (102 mm) of concrete.
4. Place forms in the desired area assuring that they are level, square, and all corners sealed so no premixed material can escape once placed.
5. Place the concrete into the forms to full depth.
6. Consolidate by moving into corners and low areas to assure there are no voids.
7. Using a straight edge (a 2 x 4 works well) level the surface of the concrete using a back and forth sawing motion.
8. Using a float or trowel smooth the surface to remove imperfections. This is not a final trowel finish, so complete this quickly. Too much troweling at this point will cause dusting and weaken the surface.
9. Using a concrete grooving tool, cut joints into the concrete every 3 - 4 ft (.9 - 1.2 m). Expansion joints should be placed every 8 ft x 12 ft (2.4 x 3.7 m) in each direction and must extend through the entire depth of the slab.
10. Once the concrete has stiffened slightly and all water has evaporated from the surface use the trowel to put a smooth level surface on the concrete. Applying a light broom finish will aid with traction and remove any imperfections left from the trowel.
11. Forms can be removed the following day.

Posts and Poles:

1. Dig hole to required depth and diameter (depth should be 1/3 the length of the post or pole and hole should be 3 times the diameter of the pole or post width).
2. Place the post or pole in the center of the hole.
3. Level and support post or pole in place.
4. Fill hole with mixed concrete and consolidate to remove any air voids
5. Slope concrete at the surface to allow water to drain away.
6. Wait a minimum of 24 hours before posts or poles are subjected to any strain.
7. If load bearing consult with your local building code requirements before proceeding.

Countertops:

The higher strength provided by 5000 Plus allows it to be used in making concrete countertops as thin as 1.5" (38 mm). For complete details on the manufacture and installation of concrete countertops visit chengdesign.com.

5000 PLUS CONCRETE MIX

SINCE SAKRETE™ 1936

◆ The Pro's Choice Since 1936

Repairs (greater than 2" (51 mm) in depth):

1. Surfaces to be repaired must be sound, dimensionally stable, and clean.
2. Slick or sealed surfaces must be thoroughly roughened to an ICRI CSP of 3 to 5.
3. Sides of repair area must be squared off.
4. Clean all reinforcing steel to bare white metal and coat with a rust preventative if not covering within 8 hours.
5. All surfaces that will come in contact with the concrete mix should be brought to a SSD (Surface Saturated Dry) condition before application of the material.
6. Clean and remove all loose materials and debris before proceeding.
7. Place the mixed concrete mix into the area that is being repaired.
8. Use a float to remove any surface imperfections.

Mixing:

1. Empty contents of Sakrete 5000 Plus High Strength Concrete into a wheelbarrow or mortar pan forming a crater in the center of the dry mix for the addition of clean potable water. Projects requiring multiple bags are mixed much easier with a mechanical concrete mixer.
2. Add clean potable water (see table above for water amounts) or enough to achieve a workable mix. Add additional water if needed but AVOID A SOUPY MIX. Excess water reduces strength and durability and can cause cracking, dusting or scaling.

Curing:

1. Proper curing is critical for sound results. Curing means maintaining proper moisture and temperature. The concrete must be kept continuously moist for several days.
2. Covering the concrete slab with plastic is a practical way to help retain moisture. Place plastic after concrete has set.
3. If surface begins to appear dry remove the plastic moisten the surface and replace the plastic.
4. New concrete can be opened to foot traffic in 24 hours and vehicular traffic in 72 hours.

Precautions:

Air, mix and substrate temperatures should be between 40°F (4°C) and 90°F (32°C) with no rain in the forecast within 24 hours of application. For applications outside this range of temperatures and conditions, contact Sakrete Technical Service.

- Colder temperatures or higher humidity conditions will retard set times
- Use only clean mixing container and tools
- Do not over trowel
- Do not overwater
- Do not add any materials other than clean potable water or Sakrete Bonder and Fortifier. See Technical Data Sheet for mixing instructions.
- Protect from freezing for 48 hours

NOTE: Proper application and installation of all Sakrete products are the responsibility of the end user.

Safety:

READ and UNDERSTAND the Safety Data Sheet (SDS) before using this product. WARNING: Wear protective clothing and equipment. For emergency information, call CHEMTREC at 800-424-9300 or 703-527-3887 (outside USA).
KEEP OUT OF REACH OF CHILDREN.

Limited Product Warranty:

The manufacturer warrants that this product shall be of merchantable quality when used or applied in accordance with the manufacturer's instructions. This product is not warranted as suitable for any purpose other than the general purpose for which it is intended. This warranty runs for one (1) year from the dates the product is purchased. ANY IMPLIED WARRANTY OF MERCHANTABILITY OR FITNESS FOR A PARTICULAR PURPOSE ON THIS PRODUCT IS LIMITED TO THE DURATION OF THIS WARRANTY. Liability under this warranty is limited to replacement or defective products or, at the manufacturer's option, refund of the purchase price. CONSEQUENTIAL AND INCIDENTAL DAMAGES ARE NOT RECOVERABLE UNDER THIS WARRANTY.

SAKRETE® and the background design are registered trademarks of SAKRETE of North America LLC, Charlotte, NC 28217 • ©2006. SAKRETE® is manufactured under license from SAKRETE of North America LLC.
For current and complete product information, contact SAKRETE Technical Services toll-free at 866-725-7383 or visit Sakrete.com.

SECTION 06 16 33

Tile Backer

RedGard® Uncoupling Mat

1 Product Name

RedGard® Uncoupling Mat

2 Manufacturer

Custom Building Products
Technical Services
10400 Pioneer Boulevard, Unit 3
Santa Fe Springs, CA 90670
Customer Support: 800-272-8786
Technical Services: 800-282-8786
Fax: 800- 200-7765
Email: contactus@cbpmail.net
custombuildingproducts.com

3 Product Description

A waterproof, vapor-proof uncoupling membrane that can be used for crack-isolation in most tile, porcelain or natural stone installations, and can be applied over challenging substrates such as installation over green (young) concrete and single ply 19.2" (49 cm) o.c. wood framed floors. RedGard® Uncoupling Mat is designed differently than bonded membranes. When exposed to excessive substrate movement it absorbs stress and preserves the surface and integrity of the tile. RedGard® Uncoupling Mat's bonding layers have reinforced fleece which locks mortar into the mat, ensuring strong, reliable installations.

Key Features

- Helps prevent cracks in tile and grout
- Use to replace 1/4" (6 mm) backerboard or a second layer of plywood in tile installations - 1 roll replaces 3-4 sheets of 1/4" (6 mm) backerboard
- Use with polymer modified thin-set mortar - As recommended for bonding porcelain and other difficult to bond tiles
- Reinforced fleece bonding layer locks in mortar for a strong bond
- No fasteners required
- Mat made from 70% recycled pre-consumer waste, by weight

Suitable Tile Types

- Ceramic tile, all types including impervious porcelain
- Most natural stone
- Precast terrazzo tile
- Contact Custom Technical Services when installing moisture sensitive tile or stone.

Suitable Substrates

- Concrete, cement mortar, masonry
- Young concrete
- Cement backerboard
- Exterior plywood and OSB (interior, dry areas only)
- Exterior decks – Contact Technical Services
- Post-tension concrete – Contact Technical Services
- Lightweight concrete (min. 2000 psi compressive strength)
- Gypsum-based cement topping (min. 2000 psi compressive strength)
- Existing ceramic tile and resilient flooring
- Floor heating systems - contact Technical Services

Benefits of Product in the Installation

- Elastic, rot proof and resistant to aggressive substances and liquids such as alkalis, solvents and oils.
- Bridges cracks, uncouples floor assemblies from their substrates, and is suitable as an underlayment for all floor tiles and stone.
- Protected by a Lifetime System Warranty when used with a qualifying mortar.
- Contains 70% recycled material by weight.
- Can be used as an ANSI A118.10 waterproof membrane.
- Allows installation of tile over concrete with high moisture content.

Limitations to the Product

- Do not bond directly to hardwood, Luan plywood, particle board, parquet, cushion or sponge-back vinyl flooring, metal, fiberglass, plastic.
- Do not use as a wear surface.
- When setting dimensional stone larger than 12" × 12" (30 × 30 cm), subfloor deflection requirements must be > L720 and additional plywood layers will be necessary.
- Contact Custom's Technical Services regarding in-floor heating systems.

Packaging

- 1 m x 30 m Rolls
- 1 m x 5 m Rolls (Available in select locations)

4 Technical Data

Applicable Standards

American National Standards Institute (ANSI) ANSI A108.01, A108.17, A118.10 and A118.12 American National Standards for the Installation of Ceramic Tile ASTM International (ASTM)

- ASTM C627 Standard Test Method for Evaluating Ceramic Floor Tile Installation Systems Using the Robinson-Type Floor Tester
- ASTM D638 Standard Test Method for Tensile Properties of Plastics
- ANSI A138.1 Green Tile Standard

Tile Council of North America (TCNA) TCNA Handbook for Ceramic Tile Installation, TCNA Method EJ171, F125, F147, F148, F128 & F125A

Published Date: 6/15/2017

RedGard® Uncoupling Mat

- TTMAC D313F

Environmental Consideration

Custom® Building Products is committed to environmental responsibility in both products produced and in manufacturing practices. Use of this product may contribute to LEED® certification.

5 Instructions

General Surface Prep

Exterior and wet areas must have proper sloping to drains. All surfaces must be structurally sound, clean, dry and free from contaminants that would prevent a strong bond. Newly prepared concrete must be troweled smooth and textured to a fine broom finish. Existing surfaces must be scarified and leveled, and all defects must be repaired. Cracks exceeding 1/8" (3 mm) should be treated in accordance with TCNA F125 or TCNA F125A. Below are recomended methods for surface preporation. The use of a bonding primer, CUSTOM's MBP Multi-Surface Bonding Primer, may be an acceptable alternative. **All exterior applications must be properly and uniformly sloped away from structures or to drains.**

Bonding to Lightweight Cement and Gypsum Surfaces

Gypsum substrates must have a PSI greater than 2000 and must first be primed or sealed per manufacturer's instructions. When using thin-set applied RedGard® Uncoupling Mat, all gypsum substrates must be coated with RedGard® Waterproofing and Crack Prevention Membrane or Custom® 9240 Waterproofing and Anti-Fracture Membrane.

Bonding to Plywood Surfaces

Plywood flooring including those under resilient flooring must be structurally sound, built to industry standards, and deflection should not exceed L/360 for tile or L/720 for natural stone. Minimum 5/8" plywood over 16" oc joist spacing is required.

Bonding to Existing Surfacing Material

Resilient flooring or plastic laminates must be well-bonded, clean and free of all contaminates. Roughen the surface by sanding or scarifying, rinse and allow to dry. Do not sand flooring containing asbestos. For existing well-bonded ceramic tile, mechanically abrade with carborundum stone. Rinse and allow to dry. When sanding we recommend the use of an approved respirator.

Movement Joint Placement

Expansion joints and cold joints, as described in ANSI A108.01, should never be bridged with setting material. They must be brought through the tile work and filled with an appropriate elastomeric sealant, such as Custom's 100% Silicone. Contact Custom's Technical Services for additional information regarding questions about the proper treatment of control or saw cut joints. Refer to TCNA EJ171, F125 & F125A.

Application of Product

Mortar and Notch Requirement

Using a thin-set mortar that meets ANSI A118.4, A118.15 and/or A118.11, apply the thin-set mortar using either a 5/16" x 1/4" (7. 9 x 6.4 mm) V-notch trowel or a 1/4" x 1/4" (6.4 x 6.4 mm) square notch trowel (recommended) to the substrate. Be careful not to trowel out more mortar than you can cover in the specified open time with RedGard® Uncoupling Mat.

Installing RedGard® Uncoupling Mat

Apply the RedGard® Uncoupling Mat to the floor, fleece side down. Embed the matting into the bonding mortar using a float or screed joining sections of mat, simply align end and side sections of adjacent sheets. Occasionally check the transfer of the bonding mortar to the mat. Lift up a corner of the matting to check coverage. Proper installation results in full contact between the fleece webbing and the thin-set mortar.

Waterproofing

Each roll of RedGard® Uncoupling Mat is waterproof and offers vapor management. For a waterproof installation, install rolls in parallel strip, eliminating as many seams as possible. Ensure that all joints are butted tight, and use RedGard® Seam Tape (sold separately) according to instructions to ensure the floor is waterproof.

Installing Tile Over RedGard® Uncoupling Mat

Tile can be installed over RedGard® Uncoupling Mat as soon as it has been pressed into place. While working on the mat, place boards on the mat directly under you to prevent damage. Flat coat an ANSI A118.4 mortar, being sure to completely fill all of the depressions in the mat first. Then, thin-set and comb additional mortar using a trowel that is appropriate for the size of the tile. Completely embed the tiles in the setting material. Periodically remove and check a tile to ensure that full coverage is being attained.

Mortar Selection

As described in the TCNA Handbook for Ceramic Tile Installation, a polymer modified (ANSI A118.4) mortar is required for the installation of porcelain tile, and an ANSI A118.11 mortar should be used when bonding to exterior glue plywood. Custom® Building Products supports the use of polymer modified mortars whenever required. For tile over 15" on one or more sides, use a polymer modified mortar designed for large and heavy tile. Rapid setting mortars and grouts are recommended for exterior applications to help prevent efflorescence.

Protection

If tile or stone will not be set immediately after curing, protect the application from heavy traffic damage. Protect from rain and inclement weather for 72 hours after application. If delays longer than 72 hours are expected, cover the area with felt paper. Care should be taken to prevent the application from becoming soiled or punctured during and after application.

Tile and Stone Installation

Install tile or stone with a Custom® Building Products polymer-modified mortar that meets ANSI A118.4, A118.15 or A118.11 standards.

Cleaning of equipment

Clean tools and hands with water before material dries.

Published Date: 6/15/2017

RedGard® Uncoupling Mat

Health Precautions

Wear impervious gloves and eye protection while using this product. Avoid contact with eyes or prolonged contact with skin. Wash thoroughly after handling. If eye contact occurs, rinse cautiously with water for several minutes, remove contact lenses if easy to do: continue rinsing. Immediately seek medical advice if symptoms are significant or persist. Do not take internally. KEEP OUT OF REACH OF CHILDREN.

Conformance to Building Codes

Installation must comply with the requirements of all applicable local, state and federal code jurisdictions.

6 Availability & Cost

Item Code	Size	Package
RGM2323	1 m X 30 m	Roll
RGM254	1 m X 5 m	Roll

7 Product Warranty

Custom® Building Products warrants to the original consumer purchaser that its product shall be free from defects in material and workmanship under normal and proper usage for a period of one year following the date of original purchase. CUSTOM's sole liability under this warranty shall be limited to the replacement of the product. Some states, countries or territories do not allow the exclusion or limitation of incidental or consequential damages, so the above limitation or exclusion may not apply to you. This warranty will not extend to any product which has been modified in any way or which has not been used in accordance with CUSTOM's printed instructions. CUSTOM makes no other warranties either expressed or implied. This warranty gives you specific legal rights, and you may have other rights that vary from state to state or from one country/territory to another. This warranty is not transferrable.

When the RedGard® Uncoupling Mat is used as a part of a qualifying full installation system of CUSTOM products, the installation can qualify for up to a lifetime system warranty. CUSTOM will repair and/or replace, at its discretion, the affected area of the system. For more information, find details and limitations to this warranty at custombuildingproducts.com.

8 Product Maintenance

Properly installed product requires no special maintenance. Do not use as a wear surface.

9 Technical Services Information

For technical assistance, contact Custom technical services at 800-272-8786 or visit custombuildingproducts.com.

10 Filing System

Additional product information is available from the manufacturer upon request.

Related Products

RedGard® Waterproofing and Crack Prevention Membrane

RedGard® Seam Tape

Published Date: 6/15/2017

RedGard® Uncoupling Mat

Coverage

Size	Coverage
1 m x 30 m	323 sq. ft. (30 sq. m)
1 m x 5 m	54 sq. ft. (5 sq. m)

Published Date: 6/15/2017

RedGard® Seam Tape

1 Product Name

RedGard® Seam Tape

2 Manufacturer

Custom Building Products
Technical Services
10400 Pioneer Boulevard, Unit 3
Santa Fe Springs, CA 90670
Customer Support: 800-272-8786
Technical Services: 800-282-8786
Fax: 800- 200-7765
Email: contactus@cbpmail.net
custombuildingproducts.com

3 Product Description

RedGard® Seam Tape is a fast and easy way to cover seams and changes of plane when installing the RedGard® Uncoupling Mat to provide waterproofing and vapor barrier protection.

Key Features

- Required for a waterproof installation of RedGard® Uncoupling Mat
- For seams and changes of plane
- Part of a waterproof/vapor barrier control system for floors

Suitable Tile Types

Suitable for all tile types

Suitable Substrates

Use on the seams of the RedGard® Uncoupling Mat only

Sizes

- 4.7" x 16.25' (120 mm x 5 m) Roll
- 6" x 98.5' (150 mm x 30 m) Roll

Benefits of Product in the Installation

- 100% waterproof protection for substrates
- Easy to cut and adjust
- Suitable for all tile types
- Use with polymer modified thin-set mortars

Limitations to the Product

RedGard® Seam Tape is not intended for use without a suitable substrate that can support the finished floor installation.

4 Technical Data

Environmental Consideration

Custom® Building Products is committed to environmental responsibility in both products produced and in manufacturing practices. Use of this product may contribute to LEED® certification.

5 Instructions

Application of Product

Install RedGard® Uncoupling Mat according to product instructions. To minimize installation duration, measure and cut the seam tape to size with a utility knife ahead of mixing thin-set for installation. Once the mat is installed, apply thin-set mortar into the top of the uncoupling mat where the seam tape will be applied. Using the flat side of a trowel or a taping knife, embed the RedGard® Seam Tape into the still wet thin-set. With firm pressure, work the trowel or taping knife at angles out and away from the center taking care to work out any air that may have been trapped when the seam tape was placed.

Protection

If tile or stone will not be set immediately after curing, protect the application from heavy traffic damage. Protect from rain and inclement weather for 72 hours after application. If delays longer than 72 hours are expected, cover the area with felt paper. Care should be taken to prevent the application from becoming soiled or punctured during and after application.

Cleaning of equipment

Clean tools and hands with water before material dries.

Health Precautions

Wear impervious gloves and eye protection while using this product. Avoid contact with eyes or prolonged contact with skin. Wash thoroughly after handling. If eye contact occurs, rinse cautiously with water for several minutes, remove contact lenses if easy to do: continue rinsing. Immediately seek medical advice if symptoms are significant or persist. Do not take internally. KEEP OUT OF REACH OF CHILDREN.

Conformance to Building Codes

Installation must comply with the requirements of all applicable local, state and federal code jurisdictions.

6 Availability & Cost

Location	Item Code	Size	Package
USA	RGST5	4.7" x 16.25'	6 rolls per case
USA	RGST30-EA	6" x 98.5'	1 roll per case

Published Date: 10/7/2016

RedGard® Seam Tape

7 Product Warranty

Custom® Building Products warrants to the original consumer purchaser that its product shall be free from defects in material and workmanship under normal and proper usage for a period of one year following the date of original purchase. CUSTOM's sole liability under this warranty shall be limited to the replacement of the product. Some states, countries or territories do not allow the exclusion or limitation of incidental or consequential damages, so the above limitation or exclusion may not apply to you. This warranty will not extend to any product which has been modified in any way or which has not been used in accordance with CUSTOM's printed instructions. CUSTOM makes no other warranties either expressed or implied. This warranty gives you specific legal rights, and you may have other rights that vary from state to state or from one country/territory to another. This warranty is not transferrable.

8 Product Maintenance

Properly installed product requires no special maintenance. Do not use as a wear surface.

9 Technical Services Information

For technical assistance, contact Custom technical services at 800-272-8786 or visit custombuildingproducts.com.

10 Filing System

Additional product information is available from the manufacturer upon request.

Related Products

RedGard® Uncoupling Mat

Published Date: 10/7/2016

SECTION 07 21 00

6" Roxul ComfortBatt

Roxul ComfortBatt™

Thermal Batt Insulation for Residential & Commercial Construction

ROXUL®
The Better Insulation™

Superior Building Envelope Performance

Roxul Comfortbatt™ is a semi-rigid batt insulation designed specifically for wood and steel stud applications for residential and commercial construction. The stone wool-based insulation is made from natural stone and up to 93% recycled content, which gives it properties that other insulation can't match. It also offers superior acoustical performance to wall assemblies and floors and can be used in acoustic applications required by building code.

Fire-Safe Insulation For Wall Assemblies – Won't Burn or Develop Smoke

Roxul ComfortBatt stone wool insulation is non-combustible as determined by ASTM E136 and CAN4-S114. It will not develop smoke or promote flame spread, even when directly exposed to fire, as most other insulation materials will.

- Extremely high melting point of 1177 °C (2150 °F)
- Does not produce smoke or toxic gases in the event of a fire
- Excellent barrier against the spread of flames to help protect occupants and reduce property damage
- Eliminates the risk of insulation accidently catching fire during installation
- Excellent Passive Fire Protection – ComfortBatt can add up to an additional 15 minutes of fire protection to wall assemblies

Fire Test Performance

CAN/ULC-S702-09	Mineral Wool Thermal Insulation for Buildings	Type 1, Complies
CAN4-S114	Determination of Non-Combustibility	Non-Combustible
ASTM E 136	Determination of Non-Combustibility	Non-Combustible
CAN/ULC S102	Surface Burning Characteristics	Flame Spread = 0 Smoke Developed = 0
ASTM E 84	Surface Burning Characteristics	Flame Spread = 0 Smoke Developed = 0
NBC 2010, Article 9.25.2.2	Insulation Materials	Conforms
CCMC Evaluation Listing	Master Format 07212: Mineral Wool Batt Insulation	12018-L

NFPA MEMBER 2011-2012

The Insurance Bureau of Canada (IBC) reference to NFPA 285: Standard Fire Test Method for Evaluation of Fire Propagation Characteristics of Exterior Non-Load-Bearing Wall Assemblies Containing Combustible Components has led to several rainscreen wall system manufacturers to test with Roxul cavity wall insulation. The use of SPUF insulation does not allow rainscreen manufacturers to meet this requirement.

Performance Matters: Managing Moisture In Wall Assemblies

Roxul ComfortBatt™ is an unfaced semi-rigid batt insulation and a vapor retarder may be required by building code depending on the geographic location of the building.

The use of a vapor retarder will limit the amount of water vapor that will move to the outside wall – reducing condensation in the wall assembly. Even a small hole in the vapor barrier can have a detrimental effect on the performance of the wall and insulation.

- When insulation material such as fiberglass gets wet, it can absorb moisture, reducing R-value and presenting the risk of slumping and sagging within the wall cavity.
- Roxul ComfortBatt does not absorb water and has a low water sorption rate. It will maintain its shape within the wall cavity ensuring maximum R-value is maintained.
- Roxul ComfortBatt is resistant to water, rot, mold, mildew and bacterial growth.
- Wall assembly construction is not perfect, but Roxul ComfortBatt can minimize moisture risk.

Compliance & Specification › 2 lb/ft³ 32 kg/m³

R14/15	89 mm	2.8 kg/m²
R22/23	150 mm	4.8 kg/m²
R28/30	184 mm	5.9 kg/m²
R32	203 mm	6.5 kg/m²
Density	ASTM C 612-00 – 32 kg/m³ (2 lb/ft³)	
Fire	CAN/ULC S102 Surface Burning Characteristics Flame Spread = 0 Smoke Developed = 0	
Moisture Resistance	ASTM C 1104 Moisture Sorption 0.03%	

Better Fit Equals Better Wall Performance

To ensure the labeled R-value is achieved, batt insulation in wood and steel stud wall cavities must be gap-free and void-free. Gaps and voids are most prevalent around electrical boxes, wires and pipes.

Roxul ComfortBatt is produced at a slight over-thickness to ensure a friction fit within the wall cavity. The batts will stay in place and perform equally well in horizontal, sloped, dormer, vertical and overhead applications.

Roxul ComfortBatt's unique flexible edge ensures the semi-rigid batts compress and expand between studs and joists to eliminate slumping or sagging and conform to off-standard wood studs.

Higher density batts reduce airflow within the wall cavity, reducing convective losses. This translates into a better performing and more comfortable thermal wall.

Roxul cuts **quickly and accurately** with a serrated knife, such as a bread knife, so you can easily achieve **optimal fit around pipes, electrical boxes, wiring, ductwork, and between studs and joists** that are less than a standard width.

Studies have proven that wall assemblies with gaps and voids can result in 35% loss of the stated R-value. Roxul ComfortBatt's higher density batts make it simple for precise cutting to ensure a fit without gaps and voids.

Specifically Engineered for Use in All Residential Thermal Applications

Environmental Benefits That Go Beyond Residential Homes

The GREENGUARD Environmental Institute (GEI) is a non-profit organization that oversees the GREENGUARD Children & Schools standards. The GEI's mission is to protect human health and quality of life through programs that improve indoor air that people breat he. They offer strict certification criteria for products intended for use in schools, daycares or other environments where children spend significant periods of time. Roxul ComfortBatt™ products are certified to this standard and are recognized by the United States Green Building Council's (USGBC) LEED® program. ComfortBatt is also recognized by CaGBC (Canadian Green Building Council).

Ideal Applications for ComfortBatt™ Insulation

Roxul ComfortBatt™'s higher density ensures a snug friction fit in the wall cavity. Note: A vapor retarder may be required in the wall assembly, depending on the geographical location of the building.

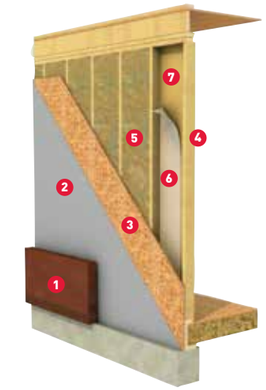

The ComfortBatt Residential Wall Assembly

(shown from outside to inside)

1. Cladding
2. Air Barrier
3. Sheathing
4. 2" x 6" Wood Studs
5. 5.5" ComfortBatt
6. Vapor Retarder
7. Gypsum

In addition to residential applications, Roxul ComfortBatt is ideal as a component of the BEDR™ cavity wall system.

BEDR Wall Components (shown from outside to inside)

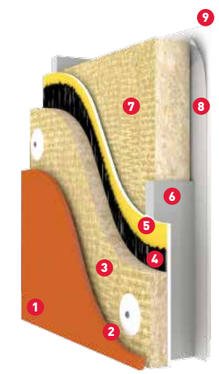

1. Terra Cotta Cladding
2. 1" Air Space (1/2" minimum)
3. 1"-2" CavityRock MD Insulation (R4.2–R8.4) or 2.5"–5" CavityRock DD (R10.75–R21.5)
4. Permeable Air Barrier
5. Exterior Gypsum Board
6. 3.5" or 6" Steel Stud
7. 3.5" or 6" ComfortBatt Insulation
8. Vapor Barrier
9. 5/8" Gypsum Board

When insulating attics, use two layers of ComfortBatt to achieve the required R-value. The bottom layer should run parallel to the joists and the top layer run in the opposite direction. For attics and cathedral ceilings, only a single layer of ComfortBatt is required between the roof trusses.

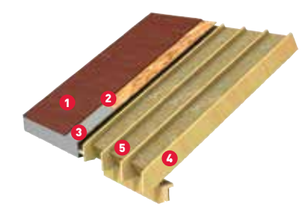

The ComfortBatt Roof/Attic Assembly

(shown from outside to inside)

1. Shingles
2. Tar Paper
3. Sheathing
4. 2" x 10" Roof Trusses
5. ComfortBatt (R30/R32)
6. Ceiling Joists
7. ComfortBatt (R22/R23 or R28/R30) two layers running perpendicular

A Range of Roxul ComfortBatt™ Products to Suit All Your Building Requirements

R-Value	Available in Canada	Available in US	RSI Value	Stud/Joist Type	Thickness	Width	Length	Coverage Sq. Ft. (per bag)
Wood Stud								
R14	✔	✗	2.47	Wood	3.5"	15.25"	47"	59.7
R14	✔	✗	2.47	Wood	3.5"	23"	47"	60.1
R15	✗	✔	2.64	Wood	3.5"	15.25"	47"	59.7
R15	✗	✔	2.64	Wood	3.5"	23"	47"	60.1
R22	✔	✗	3.87	Wood	5.5"	15.25"	47"	39.8
R22	✔	✗	3.87	Wood	5.5"	23"	47"	37.5
R23	✗	✔	4.05	Wood	5.5"	15.25"	47"	39.8
R23	✗	✔	4.05	Wood	5.5"	23"	47"	37.5
R24	✔	✗	3.87	Wood	5.5"	15"	47"	29.4
R24	✔	✗	3.87	Wood	5.5"	22.75"	47"	29.7
R28	✔	✗	4.92	Wood	7.25"	15.25"	47"	29.9
R28	✔	✗	4.92	Wood	7.25"	23"	47"	30.7
R30	✗	✔	5.28	Wood	7.25"	15.25"	47"	29.9
R30	✗	✔	5.28	Wood	7.25"	23"	47"	30.7
R32	✔	✗	3.87	Wood	8"	15.25"	47"	29.9
R32	✔	✗	3.87	Wood	8"	23"	47"	30.0
Steel Stud								
R10	✔	✔	1.76	Steel	2.5"	16.25	48"	86.7
R10	✔	✔	1.76	Steel	2.5"	24.25	48"	97
R14	✔	✗	2.47	Steel	3.5"	16.25"	48"	65.0
R14	✔	✗	2.47	Steel	3.5"	24.25"	48"	64.7
R15	✗	✔	2.64	Steel	3.5"	16.25	48"	65
R15	✗	✔	2.64	Steel	3.5"	24.25"	48"	64.7
R22.5	✔	✔	3.96	Steel	6.0"	16.25	48"	43.3
R22.5	✔	✔	3.96	Steel	6.0"	24.25	48"	40.4
R24	✔	✔	4.22	Steel	6.0"	16.25	48"	43.3
R24	✔	✔	4.22	Steel	6.0"	24.25	48"	40.4

*Roxul ComfortBatt™ Thermal Insulation products have been tested and certified by BHFTI (The Bureau of Home Furnishings and Thermal Insulation). The Bureau is a government body under the California Department of Consumer Affairs that certifies thermal insulation performance and conducts periodic compliance testing of sample.

Roxul ComfortBatt™ Green Manufacturing Report Card

Using Roxul insulation products is one of the most cost-effective ways to make homes and buildings across North America more energy efficient. But the company's commitment to the environment goes beyond the benefits of the products themselves. It extends to the way the insulation is made, as well. Roxul's newest manufacturing facility in Milton, Ontario utilizes state-of-the art technologies to eliminate waste, reduce energy consumption and minimize the company's impact on the planet in five critical "green" areas.

1. Recycling and Waste Reduction

Our new plant has an innovative recycling system that turns all production waste into new raw materials to be reused in the process. Roxul insulation now contains up to 93% recycled materials. The facility recycles over 99% of its production waste, which dramatically reduces the impact on local landfill sites.

2. Water Conservation

Water used in the manufacturing process is collected and reused for production. Storm water from the plant site is also collected and used in the production process. This significantly reduces the amount needed from municipal drinking water resources.

3. Energy Efficiency

Heat generated during our production process is captured and recycled throughout the factory and warehouse for warmth during cold weather. Energy efficient lighting has been installed throughout the facility.

4. Lower Vehicle Emissions

A strict no-idle policy for trucks and other vehicles at the facility minimizes exhaust emissions.

5. Air Quality

Roxul uses advanced emission control technology to ensure manufacturing emissions are lower than the air quality standards set and regulated by the Ontario Ministry of the Environment (MOE). In all instances, the Roxul facility is significantly below MOE levels.

A Global Leader

Roxul Inc. is part of Rockwool International, the largest producer of stone wool insulation, which is made from natural basalt rock and recycled material.

Rockwool International was founded in 1909 and today operates worldwide with more than 8,800 employees, with 27 factories across three continents. For more than 20 years, Roxul has been serving the North American market.

In addition to thermal insulation for residential and commercial construction, Roxul also manufactures a range of other premium insulation products for multiple applications.

Roxul is the Better Insulation

Roxul ComfortBatt™ is an innovative insulation offering a world of green features. When Roxul is the specified insulation, green building developers can earn a variety of LEED® (Leadership in Energy and Environmental Design) points across four key categories toward sustainable development.

Environmentally Sustainable

Our stone wool production process utilizes some of the most advanced technology available. The Roxul facility is designed to capture and recycle rainwater, reduce energy consumption, and create zero waste to landfill by recycling raw materials back into the production process.

Roxul insulations are created using naturally occurring, inorganic raw materials and materials with a high-recycled content. Stone wool insulation is non-combustible and achieves its thermal performance without the use of blowing agents. The products do not off-gas and are fully recyclable, therefore contributing to a sustainable environment.

Roxul is pleased to have third-party certification of our products' recycled content for our Milton facility, completed by **ICC-ES SAVE**™. All Roxul products produced in the Milton facility contain a minimum of **75% recycled content.** Our Milton facility is certified to produce products containing up to 93% recycled content. For further details, contact your Roxul Sales Representative. Roxul products produced in our Grand Forks facility are currently under ICC-ES SAVE™ Certification review. Please visit **www.roxul.com** for the latest information.

ROXUL INC.
420 Bronte Street South
Suite 105
Milton, Ontario L9T 0H9
Tel: 1-800-265-6878
www.roxul.com

Fire Resistant | Water Repellent | Sound Absorbent | Saves Energy | Made from Stone

Roxul ComfortBatt™ is a trademark of Roxul Inc.
LEED® is a registered trademark of United States Green Building Council. GREENGUARD® is a registered trademark of Greenguard Environmental Institute.

ROXUL® The Better Insulation™

ROX-2409_0612

SECTION 07 27 26

Fluid Applied Vapor Barrier (R-Guard) Cat5 Rainscreen

PROSOCO®

R•Guard

AIR & WATER BARRIER

VB (Vapor Barrier)

PROSOCO R-Guard® VB is a fluid-applied air and water-resistive barrier that stops air and water leakage in cavity wall, masonry veneer construction, as well as in stucco, EIFS and most other building wall assemblies. Once on the substrate, the easily applied liquid quickly dries into a rubberized, highly-durable, water-resistant membrane.

R-Guard VB performs the function of both a vapor barrier and an air/water resistive barrier. Spray-grade R-Guard VB is ideal for special construct types that require protection from the passage of air, liquid water and water vapor. R-Guard VB reduces heating and cooling costs and lowers the risk of mold and mildew.

Compared to self-adhered or mechanically fastened sheet wraps, easy-to-use R-Guard VB provides superior protection against penetration of liquid water and water vapor. Use R-Guard VB as a high-performing water resistive barrier, vapor barrier, or as part of a continuous building-wide air barrier system. The durable membrane conforms and adheres to common building surfaces and is compatible with most paints, sealants and self-adhered waterproofing or air barrier components.

Appropriate for vertical, above-grade applications to exterior sheathing, CMU, cast concrete and most other common building materials.

ADVANTAGES

- **Reduces condensation and energy loss caused by air leaks through the wall assembly.**
- **Minimizes risk of water damage to sheathing and associated repair or replacement costs.**
- **Prevents passage of liquid water and water vapor.**
- **Fast and easy installation reduces labor costs.**
- **No air leakage or water intrusion between the sheathing and R-Guard VB – stable under air and wind pressure loads.**
- **Seamless – no tears, holes, or improperly lapped joints to compromise performance.**
- **Combines the durability and flexibility of a rubberized coating with the speed and ease of a water-based, fluid-applied application.**
- **Won't tear or lose effectiveness when exposed to weather during construction.**
- **May be exposed to weather for up to 6 months without compromising performance.**
- **Single component. Easy installation. Long pot life. Water cleanup. Low odor. Non toxic.**
- **Simplifies inspection and quality control.**
- **Compatible with most paints, sealants and coatings.**
- **Illustrations depicting the use of PROSOCO R-Guard products are available at www.prosoco.com by downloading the R-Guard Installation Guidelines.**

Limitations

- Not for use at surface or air temperatures below 40°F (4°C) or above 110°F (43°C) unless Hot Weather Precautions are followed. See "Surface and Air Temperatures."
- Not for use below-grade or in locations designed to be continuously immersed in water.
- Not for use as an exterior finish.

REGULATORY COMPLIANCE

VOC Compliance

R-Guard VB is compliant with the US Environmental Protection Agency's AIM VOC regulations. Visit www.prosoco.com/voccompliance to confirm compliance with individual district or state regulations.

SAFETY INFORMATION

Always read full label and SDS for precautionary instructions before use. Use appropriate safety equipment and job site controls during application and handling.

24-Hour Emergency Information:
INFOTRAC at 800-535-5053

TYPICAL TECHNICAL DATA

FORM	viscous liquid, mild odor light green color
SPECIFIC GRAVITY	1.34
pH	7.5–10.0
WT/GAL	11.12 lbs
ACTIVE CONTENT	no data
TOTAL SOLIDS	62.5% ASTM D 2369
VOC CONTENT	45 g/L
FLASH POINT	not applicable
FREEZE POINT	32° F (0° C)
SHELF LIFE	1 year in tightly sealed, unopened container

PREPARATION

Apply to clean surfaces free of contaminants. Chemical residues, surface coatings or films may adversely affect adhesion. Pressure-treated wood and other contaminated surfaces should be cleaned with an Isopropyl Alcohol wipe and allowed to flash-off before application of R-Guard products.

Roofing systems should be capped and sealed or top of walls protected from water intrusion both before and after air barrier system installation. Water intrusion may interfere with bonding of air barrier waterproofing materials and/or detrimentally impact the performance of such materials.

Concrete must be in place 28 days and free of any curing compounds or form release agents before R-Guard VB may be applied. Mortar joints in CMU construction must have a minimum 3 day cure before being treated with R-Guard products.

Protect people, vehicles, property, plants and all other surfaces not intended for application. Remove and replace damaged sheathing. Surfaces to be coated must be continuous.

On exterior sheathing, treat cracks with Joint & Seam Filler and/or R-Guard FastFlash®, as needed. Consult a structural engineer for all moving cracks, and repair as indicated.

Fill, Bridge and Flash

1. Fill surface defects and over driven fasteners with R-Guard Joint & Seam Filler and/or FastFlash®, as needed.
2. Seal cut edges of gypsum board sheathing in rough openings, and where appropriate, with fast drying R-Guard PorousPrep. Gun and spread Joint & Seam Filler and/or FastFlash® into all inside corners, cracks, open joints and seams, as needed.
3. Use FastFlash® to coat the improved rough opening and out onto the exterior wall assembly face 4–6 inches (100–152 mm), creating a continuous waterproof membrane free of voids or pinholes.
4. Let all joint and seam fillers and rough opening treatments skin over before applying R-Guard VB.

See individual product data sheets and R-Guard Installation Guidelines for more information.

Surface & Air Temperatures

Surface and ambient air temperatures should be 40°F (4°C) and rising and below 110°F (43°C) during application and drying. Wind and high temperatures will accelerate drying.

Hot Weather Conditions/Precautions: If air or surface temperatures exceed 95°F (35°C), apply to shaded surfaces and before daytime air and surface temperatures reach their peak. Hot surfaces may be cooled with a mist of fresh water. Surfaces may be damp but must be free of standing water before application. Keep containers closed and out of direct sunlight when not in use. Cover open pails with a wet towel as needed to prevent skinning.

Equipment

Mix R-Guard VB with a low-speed drill and clean mixing paddle. When roller applying, use a 3/4 inch (19 mm) nap roller.

R-Guard VB is compatible with GRACO and Titan airless spray equipment with the following specifications:

- Minimum 1 gallon per minute output.
- Minimum hose width of 3/8 inch.
  NOTE: A ¼ x 3-foot whip hose may be used for ergonomic purposes. Run 3/8 inch ID hose all the way to the 3-foot whip hose.
- Minimum tip size of 0.027–0.031.
- Minimum pressure requirement to spray of 2,000 psi at the gun with an airless sprayer rated no lower than 3,300 psi.
- Remove all filters in sprayer and gun before application.

Storage & Handling

Keep from freezing. Store in a cool dry place. Keep container tightly closed when not dispensing. Do not open container until preparation work is complete. Do not mix or alter with other chemicals. When stored at or below 80°F (27°C), R-Guard VB has a shelf life of 12 months after the date of

manufacturer. This shelf life assumes upright storage of factory-sealed containers. Do not double stack pallets. Dispose of unused products and containers in accordance with local, state and federal regulations.

APPLICATION

Read "Preparation" and the Safety Data Sheet before use. ALWAYS TEST.

Dilution & Mixing

Do not dilute or alter, except for use in sprayers. The product may need thinning with up to 5 percent fresh water, based on surface, drying conditions and equipment. Always test.

Mix well before use with a low-speed drill and clean mixing paddle. Avoid mixing air into the membrane.

Typical Coverage Rates

Coverage rates will vary depending on surface porosity, moisture uptake, and other factors. Unless otherwise required by the referenced test method, test results cited on the Product Test Data were achieved when the product was applied at two coats of 15 wet mils to DensGlass® gold fiberglass mat gypsum sheathing. Some gypsum sheathing products, OSB and CMU may require additional material to achieve hide and the desired mil thickness for a pinhole free coating. In those cases, more than two coats may be required. Actual rates must be determined through mock-up applications.

For more information regarding coverage rates as it pertains to glass-mat sheathing, please consult the AMT Laboratories Technical Bulletin available at www.prosoco.com/literature-library.

R-Guard VB is packaged in 5-gallon containers.

- *Exterior Gypsum Board and Plywood*: 40–50 sq.ft. per gallon per coat
- *OSB and CMU*: 30–50 sq.ft. per gallon per coat (*2-coat minimum required to achieve a pinhole-free surface)*

Application Instructions

Typical application requires two coats at 15 wet mils each. Some sheathing may require additional material to achieve a continuous coating.

1. Apply one coat at 15 wet mils. Allow to dry.
2. Apply second coat to uniform thickness of 15 wet mils. When spray applying, back rolling is necessary to maximize coverage for a void- and pinhole-free surface.
   For CMU applications, take special care to achieve full coverage around wall ties or surface irregularities.

BEST PRACTICES

Though R-Guard VB can be located anywhere in the wall assembly, the ideal location is on the cavity-facing side of the exterior sheathing or CMU backup. This positions the air barrier to accommodate transitions with other building components. It also lets the air barrier perform as a water-resistive barrier.

It is not necessary to apply VB to the inside of rough openings prepared with FastFlash®. If a vapor barrier coating is required for the rough opening, FastFlash® may be over coated with VB.

When spray applying material, back rolling is necessary to maximize coverage for a void- and pinhole-free surface.

Always use a minimum of two coats of R-Guard VB on OSB and CMU.

For Cast-in-Place Concrete Applications, the concrete designated for application must be clean, smooth and free of curing compounds and form release agents. Repair bug holes, honey combing and other imperfections using a suitable cementitious mortar. Remove concrete splashes, over pours, grout or slurry rundown using appropriate mechanical means. Fill and prepare minor imperfections in the concrete surface with R-Guard Joint & Seam Filler. After product application, inspect the surface to ensure the coating is applied at the appropriate wet mil thickness, achieving a continuous film and free of pinholes. Treat visible pinholes or breaks in the film with additional primary air and water barrier coating or R-Guard FastFlash®.

Coverage rates will vary depending on surface porosity, moisture uptake, and other factors. Some gypsum sheathing products require additional material to achieve hide and the desired mil thickness for a pinhole free coating. In some cases, more than two coats may be required. Actual rates must be determined through mock-up applications. For more information regarding coverage rates as it pertains to glass-mat sheathing, please consult the AMT Laboratories Technical Bulletin available at www.prosoco.com/literature-library.

Roofing systems should be capped and sealed or top of walls protected from water intrusion both before and after air barrier system installation. Water intrusion may interfere with bonding of air barrier waterproofing materials and/or detrimentally impact the performance of such materials.

Common installation guidelines depicting use of PROSOCO R-Guard® products are available at www.prosoco.com by downloading the R-Guard Installation Guidelines.

To schedule field technical support, contact your PROSOCO Technical Customer Care toll-free at 800-255-4255. Field visits by PROSOCO personnel are for the purpose of making technical recommendations only. **PROSOCO is not responsible for providing job site supervision or quality control**. Proper application is the responsibility of the applicator.

3. Inspect membrane before covering. Repair any deep gouges, punctures or damaged areas with FastFlash® or Joint & Seam Filler. If the surface of the primary air barrier or liquid flashing membrane is damaged during construction, remove all loose surface contaminants before selective recoating with additional FastFlash®, Joint & Seam Filler or VB. Overlap repairs, penetration treatments, transitions, SS ThruWall, rigid flashing and other air barrier components to ensure positive drainage and continuity of the air and water-resistive barrier.

Curing and Drying

Complete drying times vary with temperature, humidity and surface conditions. Protect from rain or freezing until completely dry. At 70°F (21°C) and 50% relative humidity, R-Guard VB dries to touch and can be over coated in 2–4 hours.

Cleanup

Clean tools and equipment with water immediately after use. Remove dried material mechanically.

WARRANTY

The information and recommendations made are based on our own research and the research of others, and are believed to be accurate. However, no guarantee of their accuracy is made because we cannot cover every possible application of our products, nor anticipate every variation encountered in masonry surfaces, job conditions and methods used. The purchasers shall make their own tests to determine the suitability of such products for a particular purpose.

PROSOCO, Inc. warrants this product to be free from defects. **Where permitted by law, PROSOCO makes no other warranties with respect to this product, express or implied, including without limitation the implied warranties of merchantability or fitness for particular purpose**. The purchaser shall be responsible to make his own tests to determine the suitability of this product for his particular purpose. PROSOCO's liability shall be limited in all events to supplying sufficient product to re-treat the specific areas to which defective product has been applied. Acceptance and use of this product absolves PROSOCO from any other liability, from whatever source, including liability for incidental, consequential or resultant damages whether due to breach of warranty, negligence or strict liability. This warranty may not be modified or extended by representatives of PROSOCO, its distributors or dealers.

CUSTOMER CARE

Factory personnel are available for product, environment and job-safety assistance with no obligation. Call 800-255-4255 and ask for Customer Care – technical support.

Factory-trained representatives are established in principal cities throughout the continental United States. Call Customer Care at 800-255-4255, or visit our web site at www.prosoco.com, for the name of the PROSOCO representative in your area.

PRODUCT TEST RESULTS
R-Guard VB

TEST	METHOD	CRITERIA	RESULTS
Water Vapor Transmission	ASTM E 96 Dry Cup	Measure	0.063 perms
Water Resistance	ICC-ES AC212[1] AATCC[2] 127	No water infiltration after exposure to 55 cm head of water for 5 hours	Pass
Air Permeance	ASTM E 2178	≤ 0.02 L / s·m² at 75 Pa (≤ 0.004 cfm / ft² at 1.57 psf)	Pass
Air Leakage of Air Barrier Assemblies	ASTM E 2357	≤ 0.2 L / s·m² at 75 Pa (≤ 0.04 cfm / ft² at 1.57 psf)	Pass
Fastener Sealability	ASTM D 1970	No water infiltration	Pass
Pull Adhesion	ASTM D 4541	110 kPa (16 psi) or substrate failure	Pass
Surface Burning Characteristics	ASTM E 84	Criteria for ICC and NFPA Class A Building Material: Flame Spread ≤ 25 Smoke Developed ≤450	Meets Class A Building Material Pass
Fire Propagation Characteristics of Exterior Non-Load-Bearing Wall Assemblies	NFPA[3] 285	Must resist flam propagation and flame spread.	Pass[4]

NOTES:

1: International Code Council Evaluation Service Acceptance Criteria 212
2: American Association of Textile Chemists and Colorists
3: National Fire Protection Association
4: Intertek Testing Services NA, Inc. Final Report Number G100445307SAT-001_Rev1

SECTION 07 92 00

(R-guard) Fast Flash, Joint and Seam Filler, & Air Dam

PROSOCO R•GUARD® WET-FLASH®

FastFlash®

liquid-applied flashing membrane

FastFlash* is part of the family of PROSOCO R-GUARD® products developed to prevent the unwanted movement of water and air through building envelopes. Utilize FastFlash® as a liquid flashing membrane in rough openings and to counter-flash waterproofing and air barrier components in new or existing wall assemblies.

OVERVIEW

PROSOCO R-GUARD® FastFlash® is a gun-grade waterproofing, adhesive and detailing compound that combines the best of silicone and polyurethane properties. This single-component, 99% solids, Silyl-Terminated-Poly-Ether (STPE) is easy to gun, spread and tool to produce a highly durable, seamless, elastomeric flashing membrane.

Use FastFlash® as a liquid flashing membrane in rough openings of structural walls.

Allows same day installation of windows, doors and other wall assembly, waterproofing or air barrier components.

Use FastFlash® to adhere, transition and counter-flash through-wall sheet flashing.

Suitable for all climates, FastFlash® bonds directly to damp or dry surfaces and cures under a variety of weather conditions. It simplifies the process of producing watertight details in new or existing construction.

Use FastFlash® as part of a continuous, building-wide air barrier system, or to complement conventional waterproofing or air barrier components.

Appropriate for vertical or horizontal above-grade applications to concrete, masonry, natural stone, structural sheathing, architectural metals, painted metals, glass, PVC, FRP, EPDM and most other building materials.

SPECIFICATIONS

For all PROSOCO product specifications visit www.prosoco.com and click on "SpecBuilder" or "Solution Finder."

ADVANTAGES

- Solvent free. Isocyanate free. Complies with all VOC regulations.
- Silane functional polymer provides superior long term adhesion, crack bridging and weathering characteristics.
- Bonds to most common building materials without priming to produce a durable, structural, weather-tight seal which is not subject to tearing or displacement when subjected to wind loads during construction.
- Will not tear or lose effectiveness when exposed to weather during construction.
- May be exposed to weather for up to 6 months without compromising performance.
- Single component formulation saves time and requires no mixing.
- Easy to gun and spread in all climates.
- Produces an opaque membrane when installed at the recommended 12–15 wet mils to simplify inspection and quality control.
- Bonds and cures in wet weather and on damp substrates.
- Paintable with most paints after 2 hours.
- Compatible with most urethane, silicone and acrylic sealants and coatings.
- No shrinkage. No staining. No yellowing.
- Breathable – allows damp surface to dry.
- Will not support mold growth.
- Cured service temperatures: –75°F to 400°F.
- Meets IITS-0230C and ASTM-C-920.

Limitations

- Not for use as a structural sealant. Use R-GUARD AirDam®.
- Not for use in place of appropriate through-wall flashing.
- Not for use below grade or in locations designed to be continuously immersed in water.

REGULATORY COMPLIANCE

VOC Compliance

PROSOCO R-GUARD® FastFlash® is compliant with the following national, state and district VOC regulations:

- [X] US Environmental Protection Agency
- [X] California Air Resources Board SCM Districts
- [X] South Coast Air Quality Management District
- [X] Maricopa County, AZ
- [X] Northeast Ozone Transport Commission

TYPICAL TECHNICAL DATA

R-GUARD FASTFLASH®	
FORM	brick red, gun-grade sealant
SPECIFIC GRAVITY	1.45 – 1.60
pH	Not applicable
WT/GAL	12.5 lbs/gal
ACTIVE CONTENT	99%
TOTAL SOLIDS	99%
VOC CONTENT	30 g/L maximum
FLASH POINT	No data
FREEZE POINT	No data
SHELF LIFE	1 year in unopened, factory-sealed container
CURED PROPERTIES	
Hardness, Shore A	40–45
Tensile Strength	180 psi
Elongation at Break	400%
Water Vapor Transmission	14 perms @ 12 mils
Peel Strength	25 pli
Accelerated Weathering	Passes
Surface Burning ASTM E 84	Flame Spread: 0 Smoke Developed: 15 NFPA and ICC Class A Building Material
Staining	Passes
Corrosive Properties	Non-corrosive
UNCURED PROPERTIES	
Cure Rate	3/16 inch thickness/24 hours

*PROSOCO R-GUARD® FastFlash® utilizes Wet-Flash® formulations developed by Building Envelope Innovations, LLC.

PREPARATION

To ensure best results, apply to clean surfaces free of contaminants. Chemical residues, surface coatings or films may adversely affect adhesion.

Protect people, vehicles, property, plants and all other surfaces not intended to receive FastFlash®.

Remove and replace damaged sheathing.

In rough openings, prime all raw gypsum board edges with R-GUARD GypPrime.

Use R-GUARD Joint & Seam Filler to fill and tool all inside corners to ensure positive drainage. Fill and tool all cracks, joints and seams that measure up to 1/2 inch in width using R-GUARD Joint & Seam Filler.

Fill or repair any cracks larger than 1/2 inch. FastFlash® is fully compatible with urethane or silicone sealants.

Ensure positive drainage at all rough openings.

Surface and Air Temperatures

Surface and ambient temperatures should be 35°F (2°C) and rising and below 110°F (43°C) during application and drying. Wind and high temperatures will accelerate drying of FastFlash®. If air or surface temperatures exceed 95°F (35°C), apply FastFlash® to shaded surfaces and before daytime air and surface temperatures reach their peak.

Though FastFlash® tolerates rain immediately after installation, do not apply to surfaces with standing water or frost.

Equipment

Apply using a professional caulking gun. Use a DRY joint knife, trowel, or spatula to spread the product. Do not use soapy water when tooling or spreading.

Storage & Handling

Store in a cool, dry place. Keep container tightly closed when not dispensing. Do not open container until preparation work has been completed. Do not alter or mix with other chemicals. When stored at or below 80°F (27°C) R-GUARD FastFlash® has a shelf life of 12 months after the date of manufacture. This shelf life assumes upright storage of factory-sealed containers. Do not double stack pallets. Dispose of unused product and container in accordance with local, state and federal regulations.

ALWAYS TEST

ALWAYS TEST a small area of each surface to confirm suitability and desired results before starting overall application. Test with the same equipment, recommended surface preparation and application procedures planned for general application.

APPLICATION

Before use, read "Preparation" and "Safety Information."

Dilution

Apply as packaged. Do not dilute or alter, or use for applications other than specified. No mixing required.

Coverage Rates

Coverage varies based on surface texture and irregularities. Theoretical coverage rates are calculated. Practical coverage rates are based on field experience, applied to irregular surfaces with varying surface textures.

PROSOCO R-GUARD® FastFlash® is sold in 29 oz tubes and 20 oz sausages.

Flashing Membrane Estimator		
FastFlash®	Theoretical	Practical
12–15 mils	24–30 sq.ft. per 29 oz tube	22–28 sq.ft. per 29 oz tube
	16–21 sq.ft. per 20 oz sausage	15–19 sq.ft. per 20 oz sausage

Application Instructions

Prepare

Prepare all surfaces as described above under "Preparation." Once preparation is complete, cut open tip of threaded fitting, install nozzle and cut nozzle to desired opening.

Waterproofing Rough Openings

1. Apply a thick bead of FastFlash® over any visible gaps in the prepared rough opening.
2. Immediately press and spread the wet product into the gaps.
3. Allow treated surfaces to skin.
4. Starting at the top, apply a thick bead of FastFlash® in a zigzag pattern to the structural wall surrounding the rough opening.
5. Spread the wet product to create an opaque, monolithic flashing membrane which surrounds the rough opening and extends 4 to 6 inches (100–152 mm) over the face of structural wall. Apply and spread additional FastFlash® as needed to create an opaque, monolithic flashing membrane which is free of voids or pin holes.
6. Apply additional product in a zigzag pattern over the structural framing inside the rough opening. *NOTE:* When using R-GUARD FastFlash® with existing sheet weather resistive barriers, extend FastFlash® 8-10 inches over the face of the structural wall to ensure positive drainage.
7. Spread the wet FastFlash® to create an opaque, monolithic flashing membrane which covers the inside of the rough opening and mates with the adjacent membrane which surrounds the rough opening. Apply and spread additional product as needed to produce an opaque, monolithic flashing membrane which is free of voids or pin holes.
8. Allow treated surfaces to skin before installing windows, doors and other wall assembly, waterproofing or air barrier components.

Protect

Apply PROSOCO R-GUARD® Spray Wrap, MVP, VB, TMVP, Cat 5® or other waterproofing or air barrier component pursuant to manufacturer instructions.

Transition

Flashing Transitions

1. Fill any voids between the top of the flashing leg and the vertical wall with Joint & Seam Filler. Tool to direct water from the vertical wall to the flashing.
2. Apply a generous bead of FastFlash® to the top edge of the flashing leg.
3. Spread the wet product to create a monolithic "cap flash" flashing membrane that extends 2 inches (51 mm) up the vertical face of the structural wall and 1 inch over the flashing membrane. Apply additional FastFlash® as needed to achieve a transition which is free of voids and pinholes. This "liquid termination bar" helps secure the flashing and ensures positive drainage from the wall surface to the flashing.

Curing and Drying

At 70°F (21°C) and 50% relative humidity, product skins within 30 minutes and dries in 4 hours. Paintable with most paints after 2 hours.

FastFlash® is moisture curing. Low temperatures and low relative humidity slow dry time. High temperatures and high relative humidity accelerates dry time.

Cleanup

Clean tools and equipment with mineral spirits or similar solvent immediately after use. Follow all safety precautions. Remove cured FastFlash® mechanically using a sharp-edged tool.

BEST PRACTICES

Surfaces should be clean and in good repair before application. Most sheathing and concrete masonry can be cleaned with Enviro Klean® 2010 All Surface Cleaner. Information is available by calling Technical Customer Care toll-free at 800-255-4255.

In rough openings, prime raw gypsum board edges with R-GUARD GypPrime.

For best results, spread and tool FastFlash® while still wet, within 2–3 minutes of gun application.

Hot Weather Precautions: when practical install FastFlash® to shaded surfaces. When conditions are hot and dry, cool the surface with fresh water mist. Allow standing water to dry before installation.

Low temperatures and low relative humidity extend cure time. Mist surfaces with fresh water to accelerate cure.

Use Joint & Seam Filler to adhere and gasket mechanically fastened building components. Use FastFlash® to counter-flash.

When using FastFlash® as a flashing membrane, apply 12–15 wet mils. FastFlash® produces an opaque flashing membrane when installed at the recommended 12–15 wet mils to simplify inspection and quality control.

PROSOCO R-GUARD® Joint & Seam Filler, FastFlash® and AirDam® are recommended for improved performance of all R-GUARD air- and water-resistive barrier coatings.

Allow FastFlash® to skin over before installing the selected PROSOCO R-GUARD® Primary Air & Water-Resistive Barrier.

Protect cleaned masonry with the appropriate PROSOCO penetrating, breathable water-repellent. Applied to the masonry veneer, penetrating breathable water-repellents work with the water-resistive capabilities of PROSOCO R-GUARD® products to provide total protection for buildings against moisture penetration and damage.

Common installation guidelines depicting use of PROSOCO R-GUARD® products are available at www.prosoco.com.

To schedule field technical support, contact your PROSOCO Technical Customer Care toll-free at 800-255-4255. Field visits by PROSOCO personnel are for the purpose of making technical recommendations only. **PROSOCO is not responsible for providing job site supervision or quality control. Proper application is the responsibility of the applicator.**

SAFETY INFORMATION

PROSOCO R-GUARD® FastFlash® contains calcium carbonate and may cause eye and skin irritation. Use with adequate ventilation, safety equipment and job site controls during application and handling. Read the full label and MSDS for precautionary instructions before use.

First Aid

Ingestion: DO NOT induce vomiting. DO NOT give anything by mouth to an unconscious or convulsing person. Get immediate medical attention.

Eye Contact: In case of contact with eyes, lips or mouth, flush thoroughly with water. If irritation develops, consult a physician.

Skin Contact: Wash with fresh water. Get medical attention if irritation persists.

Inhalation: Remove to fresh air. If victim is having trouble breathing, remove to medical care.

24-Hour Emergency Information: INFOTRAC at 800-535-5053

WARRANTY

Information and recommendations are based on our research and the research of others, and are believed to be accurate. No guarantee of their accuracy is made because we cannot anticipate every application or variations encountered in building surfaces, job conditions and methods used. The purchasers shall make their own tests to determine the suitability of such products for a particular purpose.

PROSOCO, Inc. warrants this product to be free from defects. **Where permitted by law, PROSOCO makes no other warranties with respect to this product, express or implied, including without limitation the implied warranties of merchantability or fitness for particular purpose**. PROSOCO's liability shall be limited in all events to supplying sufficient product to re-treat the specific areas to which defective product has been applied. Acceptance and use of this product absolves PROSOCO from any other liability, from whatever source, including liability for incidental, consequential or resultant damages whether due to breach of warranty, negligence or strict liability. This warranty may not be modified or extended by representatives of PROSOCO, its distributors or dealers.

CUSTOMER CARE

Factory personnel are available for product, environmental and job-safety assistance with no obligation. Call 800-255-4255 and ask for Customer Care - technical support.

Factory-trained representatives are established in principal cities throughout the continental United States. Call Customer Care at 800-255-4255, or visit our web site at www.prosoco.com, for the name of the PROSOCO R-GUARD® representative in your area.

SECTION 07 62 00
Metal Drip Edge

VERAL ALUMINUM

siplast

Commercial Product Data Sheet

Product Description

Veral Aluminum is a high performance, foil clad, modified bitumen finish ply designed for use in multi-layer modified bitumen roof systems. Veral Aluminum consists of a fiberglass scrim/fiberglass mat composite impregnated and coated with high quality styrene-butadiene-styrene (SBS) modified bitumen and surfaced with a protective aluminum foil facing.

Product Uses

Veral Aluminum is the finish ply of the Veral Roof System, and is lapped 3 inches (7.6 cm) at sides and 6 inches (15.2 cm) at ends. The Veral System is preferably applied by torching but can be applied in approved Type IV asphalt subject to Siplast specifications and requirements. Veral roof systems are used over most roof decks with drainage.

Veral Aluminum is the standard flashing sheet in all guaranteed Siplast Roof Systems. Veral Aluminum flashing sheets are cut to size off the end of the roll and applied vertically, always working to a selvage edge. Contact Siplast for specific approval on other product uses.

Product Approvals

Veral Aluminum is approved by Factory Mutual Research (FM Standard 4470) for use in Veral Class 1 insulated steel deck constructions and insulated and non-insulated concrete roof deck constructions, subject to FM conditions and limitations.

Veral Aluminum is approved by Underwriters Laboratories for use in $_{c}UL_{us}$ Classified Veral roof systems. Veral roof systems have been classified by Underwriters Laboratories as Class A roofing systems over non-combustible, insulated non-combustible, combustible, and insulated combustible decks.

Veral meets or exceeds the requirements of ASTM D 6298 and CGSB 37-GPL-56M Type 1, Class B, Grade 2 for SBS-modified bituminous sheet materials using foil facing.

Siplast Roof Systems also have received the approval of many regional and local authorities. Please contact Siplast for specific information as required.

Current copies of all Siplast Commercial Product Data Sheets are posted on the Siplast Canada Web site at www.Siplast.ca.

COMMERCIAL PRODUCT INFORMATION

Unit:	Roll		
Coverage:	1.0 Square		(9.3 m²)
Coverage Weight Per Square:	Min:	92 lb	(4.5 kg/m²)
Roll Length:	Min:	33.5 ft	(10.21 m)
Roll Width:	Avg:	3.28 ft	(1.00 m)
Thickness:	Avg:	150 mils	(3.8 mm)
	Min:	146 mils	(3.7 mm)
Selvage Surfacing:	Release tape		
Top Surfacing:	Continuous aluminum foil		
Back Surfacing:	Silica parting agent		

Packaging: Rolls are wound onto a compressed paper tube. The rolls are placed upright on the selvage edge on pallets cushioned with corrugated cardboard and are adhered with adhesive at the labels. The top of the palleted rolls is covered with foilized Kraft paper. The palleted material is protected by a heat shrink polyethylene shroud.

Pallet: 41 in X 48 in (104 cm X 122 cm) wooden pallet.
Number Rolls Per Pallet: 23
Number Pallets Per Truckload: 18
Minimum Roll Weight: 92 lb (41.7 kg)

Storage and Handling: All Siplast roll roofing products should be stored on end on a clean flat surface. Care should be taken that rolls are not dropped on ends or edges and are not stored in a leaning position. Deformation resulting from these actions will make proper installation difficult. All roofing should be stored in a dry place, out of direct exposure to the elements, and should not be double stacked. Material should be handled in such a manner as to ensure that it remains dry prior to and during installation.

VERAL ALUMINUM

Physical and Mechanical Properties

Property (as Manufactured)	CGSB Test Method	ASTM Test Method
Roll Size	33.5 ft x 3.28 ft (10.21 m x 1 m)	33.5 ft x 3.28 ft (10.21 m x 1 m)
Thickness (minimum)	N/A	146 mils (3.7 mm)
Thickness (average)	N/A	150 mils (3.8 mm)
Minimum Weight per Roll	N/A	92 lb (41.7 kg)
Low Temperature Flexibility	-0°F (-18°C)	-0°F (-18°C)
[1]Tensile Strength or Peak Load (average)	990 N/5 cm	85 lbf/in (15.0 kN/m)
[1]Elongation at Peak Load (average)	5%	5%
[1]Ultimate Elongation (average)	45%	45%
Dimensional Stability (maximum)	0.2%	0.2%
[2]Thermal Shock Stability	0.2%	0.2%

Test methods and tolerances: CGSB 37-GP-56M (1980), ASTM D 5147, and ASTM D 146 (weight)

1. The value reported is the lower of either MD or XD.

2. This test is specifically designed for metal foil-clad materials. These materials include three different components: metal foil, glass scrim, and SBS modified bitumen. Each of these materials has a different coefficient of expansion, and it is imperative that these individual components function harmoniously to avoid severe dimensional problems that can result in foil delamination, “creep,” wrinkling, or even disbonding of the sheet from the substrate.

SECTION 07 50 00
Single Ply Roof Membrane

4 Product Data Sheets

Firestone has developed a complete range of roofing products, including EPDM membranes, flashings, adhesives, QuickSeam products, sealants, cleaning agents, fasteners and a variety of other roofing related products to build up homogeneous EPDM Roofing Systems. Each component has been carefully selected to offer the performance required by the specifications, while being compatible with the various roofing designs outlined in this document. This chapter contains information with regard to the following Firestone products:

EPDM Membranes

RubberGard EPDM Roofing Membrane . . . . . p. 4. 3
RubberGard EPDM LSFR Low Slope Fire Retardant Roofing Membrane. . . . . p. 4. 5
RubberGard EPDM FR Fire Retardant Roofing Membrane . . . . . p. 4. 7
RubberGard MAX Reinforced EPDM Roofing Membrane . . . . . p. 4. 9
RubberGard MAX FR Reinforced Fire Retardant EPDM Roofing Membrane. . . . . p. 4. 11

Primers, Adhesives and Cleaning Agents

QuickPrime Plus . . . . . p. 4. 13
QuickPrime Plus LVOC . . . . . p. 4. 14
Bonding Adhesive BA-2004 (T). . . . . p. 4. 15
Modular Water Based Bonding Adhesive WBA-3781 . . . . . p. 4. 16
Splice Wash SW-100 . . . . . p. 4. 17
Splice Adhesive SA-1065 . . . . . p. 4. 18

QuickSeam Products

QuickSeam Splice Tape. . . . . p. 4. 19
QuickSeam Reinforced Perimeter Fastening Strip . . . . . p. 4. 20
QuickSeam R.M.A. Strip . . . . . p. 4. 21
QuickSeam Batten Cover Strip . . . . . p. 4. 22
QuickSeam Flashing . . . . . p. 4. 23
QuickSeam FormFlash . . . . . p. 4. 24
QuickSeam SA Flashing . . . . . p. 4. 25
QuickSeam Pipe Flashing . . . . . p. 4. 26
QuickSeam Conduit Flashing . . . . . p. 4. 27
QuickSeam Penetration Pocket Kit . . . . . p. 4. 28
QuickSeam Walkway Pad . . . . . p. 4. 29

Sealants

Lap Sealant HS . . . . . p. 4. 30
Water Block Seal S-20 . . . . . p. 4. 31
Pourable Sealer S-10 (Parts A & B) . . . . . p. 4. 32
FillGard Pourable Sealer . . . . . p. 4. 33

Fasteners and Accessories

All Purpose Fastener. . . . . p. 4. 34
Heavy Duty Fastener. . . . . p. 4. 35
Insulation Fastening Plate . . . . . p. 4. 36
V-plate . . . . . p. 4. 37
Metal Batten Strip . . . . . p. 4. 38
Coiled Metal Batten Strip . . . . . p. 4. 39
Termination Bar . . . . . p. 4. 40
Aluminium Drain Bar . . . . . p. 4. 41

Coatings

AcryliTop PC-100 . . . . . p. 4. 42
AcryliTop PC-100 Base Coat . . . . . p. 4. 43

The designer and contractor may refer to this section for information with regard to the individual components: installation, coverage rate, basic physical properties, packaging, shelf life, storage conditions and safety precautions. In addition to these components, other products and accessories not supplied by Firestone will have to be used in conjunction with the Firestone Roofing Systems such as structural decking, thermal insulation, fasteners, edging profiles, drain outlets, etc. It is the responsibility of the respective suppliers of these products as to their suitability for any particular purpose.
At the same time, it is recommended that the designer and/or contractor consults Firestone on a job to job basis, when using non-Firestone products that are not in compliance with the specifications outlined in this document.

RubberGard EPDM Roofing Membrane

1. Description

The Firestone RubberGard EPDM membrane is a 100% cured roofing membrane made of a synthetic rubber Ethylene-Propylene-Diene Terpolymer. The sheet is made of two plies of standard compound.

2. Preparation

Roofing structure needs to be stable enough to support the temporary loading. Substrates need to be clean, smooth, dry and free of sharp edges, loose or foreign materials, oil, grease and other materials that may damage the membrane. All surface voids greater than 5 mm wide shall be properly filled with an acceptable fill material.

3. Application

Allow the membrane to relax for approximately 30 minutes before splicing or final securement. Install the RubberGard EPDM membrane in accordance with the installation instructions and details.

4. Coverage

The dimensions of the membrane are calculated to cover the substrate, including seam overlaps (100 mm for standard seams - 200 mm for seams with batten in the seam) and upstands. Provide an additional length (150 mm) at upstands for easy manipulation.

5. Characteristics

Physical

- Excellent resistance to U.V. and ozone.
- Temperature stable from -45°C to 130°C.
- Retains its elasticity at low temperature and resistant to temperature shocks up to 250°C.
- Excellent resistance to alkali rains, less resistant to oil products. Contact with mineral and vegetable oils, petroleum based products, hot bitumen and grease must be avoided.

Technical

	Test Method	Declared value
Thickness	EN 1849-2	1.1 mm
		1.5 mm
Watertightness	EN 1928 (B)	pass
Tensile strength (L/T)	EN 12311-2 (B)	≥ 8 N/mm²
Elongation (L/T)	EN 12311-2 (B)	≥ 300%
Resistance to static load - soft substrate	EN 12730 (A)	≥ 25 kg
Resistance to static load - hard substrate	EN 12730 (B)	≥ 25 kg
Resistance to impact - soft substrate	EN 12691 (B)	≥ 1700 mm
Resistance to impact - hard substrate	EN 12691 (A)	≥ 200 mm
Tear resistance (L/T)	EN 12310-2	≥ 40 N
Joint peel resistance	EN 12316-2	≥ 50 N/50mm
Joint shear resistance	EN 12317-2	≥ 200 N/50mm
Durability - UV exposure	EN 1297	pass
Foldability at low temperature	EN 495-5	≤ -45°C
Dimensional stability	EN 1107-2	≤ 0.5%
Resistance to root penetration	EN 13948	pass

Note: As European standards continue to develop, please contact Firestone Technical Services or Firestone Building Products Website for latest updates on physical properties.

6. Packaging / Storage / Shelf Life

Thickness (mm)	Width (m)	Length (m)	Weight (kg/m²)
1.14 (0.045”)	2.28* (7.5’) 2.75 (9’) 3.05 (10’) 6.10 (20’) 7.62 (25’) 9.15 (30’) 12.20 (40’) 15.25 (50’)	15.25 (50’) 30.50 (100’) 45.75 (150’) 61.00 (200’)	1.41
	5.08 (16.7’)	30.50 (100’)	1.41
1.52 (0.060”)	2.28* (7.5’) 2.75 (9’) 3.05 (10’) 6.10 (20’) 9.15 (30’) 12.20 (40’) 15.25 (50’)	15.25 (50’) 30.50 (100’)	1.95
	5.08 (16.7’)	30.50 (100’)	1.95

** Packaged two panels per roll.*

Storage: Store away from sources of punctures and physical damage. Store away from ignition sources and open flame.
Shelf Life: Unlimited.

QuickPrime Plus

1. Description

Firestone QuickPrime Plus is designed to clean and prime the RubberGard EPDM membrane and/or substrate prior to application of QuickSeam Products, Pourable Sealer or Lap Sealant. QuickPrime Plus must be applied with a QuickScrubber or QuickScrubber Plus pad and handle.

2. Preparation

Surfaces to be primed must be clean, dry and free of foreign materials, talc and dirt. Pre-cleaning with Splice Wash may be required. Stir QuickPrime Plus thoroughly before and during use. When exposed to lower temperatures for a prolonged period of time, restore to room temperature prior to use. Pour the required amount of QuickPrime Plus into a bucket for ease of application.

3. Application

Apply QuickPrime Plus to the RubberGard EPDM surfaces and/or other substrates to receive QuickSeam products with the QuickScrubber or QuickScrubber Plus pad and handle using long back and forth strokes with moderate to heavy pressure along the length of the area. Continue until surfaces become dark grey in colour (no streaking or puddling). Factory seams require parallel as well as perpendicular application motions along the factory seam. When using the QuickScrubber Plus pad and handle, make sure to apply sufficient pressure during application so the pad holder flattens to allow the total surface of the pad to contact with the RubberGard EPDM membrane. Allow the primed surfaces to dry completely according to the touch-push test (usually less than 10 minutes) before applying QuickSeam products.

4. Coverage

Thining is not allowed. The following rates can be achieved with 1 gallon.
Standard seam with 76 mm (3") Splice Tape: 60 lm – 2 sides.
B.I.S. seam with 152 mm (6") Splice Tape: 45 lm – 2 sides.
QuickSeam R.M.A. Strip: 55 lm – 1 side.
QuickSeam RPF Strip: 60 lm – 1 side.
QuickSeam SA Flashing: 35 lm – 1 side.
QuickSeam FormFlash 300 mm (12"): 45 lm – 1 side.
QuickSeam Flashing 127 mm (5"): 100 lm – 1 side.
QuickSeam Batten Cover: 90 lm – 1 side.

5. Characteristics

Technical	Base	Synthetic rubber polymers
	Colour	Translucent grey
	Solvents	Heptane, toluene
	Solids (%)	16 - 18
	Viscosity	Very thin, free flowing
	Specific gravity	0.793 (Water = 1)
	Flash point (°C)	-17.8

6. Packaging / Storage / Shelf Life

Packaging: 3.8 l (1 gallon) pails (4 pails per box) and 11.4 l (3 gallon) pails.
Storage: Store in original unopened containers at temperatures between 15°C and 25°C. Keep the material out of direct sunlight until ready for application.
Shelf Life: 12 months can be expected if stored in above-mentioned conditions. Shelf life information is only a recommendation and not a fact of life. The real expiration date highly depends on the history of storage and handling of the accessories. Quality and applicability should thus always be verified: when mixed, product should stir into a smooth and homogeneous blend product with no evidence of major clumping or separation/phasing.

7. Precautions

Flammable. Keep away from sources of ignition. Do not smoke when using. For professional use only. Use only in well ventilated areas. Avoid contact with skin and eyes. Refer to Material Safety Data Sheets. Keep out of the reach of children.

QuickPrime Plus LVOC

1. Description

Firestone QuickPrime Plus LVOC is designed to clean and prime the RubberGard EPDM membrane and/or substrate prior to application of QuickSeam Products, Pourable Sealer or Lap Sealant. QuickPrime Plus LVOC must be applied with a QuickScrubber or QuickScrubber Plus pad and handle.

2. Preparation

Surfaces to be primed must be clean, dry and free of foreign materials, talc and dirt. Pre-cleaning with Splice Wash may be required. Stir QuickPrime Plus LVOC thoroughly before and during use. When exposed to lower temperatures for a prolonged period of time, restore to room temperature prior to use. Pour the required amount of QuickPrime Plus LVOC into a bucket for ease of application.

3. Application

Apply QuickPrime Plus LVOC to the RubberGard EPDM surfaces and/or other substrates to receive QuickSeam products with the QuickScrubber or QuickScrubber Plus pad and handle using long back and forth strokes with moderate to heavy pressure along the length of the area. Continue until surfaces become dark grey in colour (no streaking or puddling). Factory seams require parallel as well as perpendicular application motions along the factory seam. When using the QuickScrubber Plus pad and handle, make sure to apply sufficient pressure during application so the pad holder flattens to allow the total surface of the pad to contact with the RubberGard EPDM membrane. Allow the primed surfaces to dry completely according to the touch-push test (usually less than 10 minutes) before applying QuickSeam products.

4. Coverage

See QuickPrime Plus.
Thining is not allowed. The following rates can be achieved with 1 gallon.
Standard seam with 76 mm (3”) Splice Tape: 60 lm – 2 sides.
B.I.S. seam with 152 mm (6”) Splice Tape: 45 lm – 2 sides.
QuickSeam R.M.A. Strip: 55 lm – 1 side.
QuickSeam RPF Strip: 60 lm – 1 side.
QuickSeam SA Flashing: 35 lm – 1 side.
QuickSeam FormFlash 300 mm (12”): 45 lm – 1 side.
QuickSeam Flashing 127 mm (5”): 100 lm – 1 side.
QuickSeam Batten Cover: 90 lm – 1 side.

5. Characteristics

Technical	Base	Synthetic rubber polymers
	Colour	Black
	Solvents	Hydrocarbon and halogenated solvents
	Solids (%)	9 – 10
	Viscosity	Very thin, free flowing
	Specific gravity	1.146 (Water = 1)
	Flash point (°C)	14

6. Packaging / Storage / Shelf Life

Packaging: 3.8 l (1 gallon) pails (4 pails per box) and 11.4 l (3 gallon) pails
Storage: Store in original unopened containers at temperatures between 15°C and 25°C. Keep the material out of direct sunlight until ready for application.
Shelf Life: 12 months can be expected if stored in above-mentioned conditions. Shelf life information is only a recommendation and not a fact of life. The real expiration date highly depends on the history of storage and handling of the accessories. Quality and applicability should thus always be verified: when mixed, product should stir into a smooth and homogeneous blend product with no evidence of major clumping or separation/phasing.

7. Precautions

Flammable. Keep away from sources of ignition. Do not smoke when using. For professional use only. Use only in well ventilated areas. Avoid contact with skin and eyes. Refer to Material Safety Data Sheets. Keep out of the reach of children.

Bonding Adhesive (BA-2004(T))

1. Description

Bonding Adhesive is a solvent based contact adhesive designed specifically for bonding Firestone RubberGard EPDM membranes to approved insulations in addition to wood, metal, masonry and other acceptable substrates.

2. Preparation

Surfaces that will receive Firestone Bonding Adhesive must be clean, smooth, dry, free of sharp edges, loose and foreign materials, oil, grease, and other contaminants. The mating surface shall be cleaned with a brush or clean rag. Stir the adhesive thoroughly (to achieve a uniform mix with no sediment on the bottom and no marbling evident) before and during use. Restore the adhesive to room temperature prior to use, if exposed to temperatures lower than 15°C for a prolonged period.

3. Application

Apply Bonding Adhesive at about the same time to both the exposed underside of the sheet and the substrate to which it will be adhered so as to allow approximately the same drying time.
Apply Bonding Adhesive evenly avoiding areas of accumulation. Apply the Bonding Adhesive with a solvent resistant roller, and roll the adhesive onto the mating surfaces. When applying Bonding Adhesive, ensure complete uniform coverage of both surfaces that will be adhered. Care must be taken not to apply Bonding Adhesive over seam areas. Bonding Adhesive can be dispensed by means of RoofTop SuperSpreader in order to achieve a more uniform coverage and obtain higher coverage rates. Allow adhesive to flash off until tacky (time depending on ambient air conditions) prior to mating the surfaces. Test the adhesive for its dryness, using the touch-push test procedure.

4. Coverage

Coverage rates depend on the smoothness of substrate and method of application.

- Manual application: between 5 and 7 m² per gallon (two sides).
- SuperSpreader: between 7 and 9 m² per gallon (two sides).

Some insulation surfaces are more uneven and porous and will result in a lower coverage rate while smooth non-porous substrates will result in higher coverage rates.
Very porous substrates (rough wood, concrete block) may require two coats of Bonding Adhesive, to ensure proper adhesion. This can be determined by testing a small area. Check by adhering a small piece of membrane to the porous substrate to verify the bonding strength.

5. Characteristics

Physical	■ Excellent resistance to aging.	
	■ Good resistance to heat and cold.	
	■ Excellent tack time for versatility of installation.	
	■ Outstanding adhesion to approved substrates for maximum performance.	
Technical	■ Base	blend of Neoprene and SBR rubbers
	■ Colour	Yellow
	■ Solvents	Acetone, Hexane, Toluene and Xylene
	■ Viscosity (cp)	3,300-3,800
	■ Specific gravity	0.7909-0.8868

6. Packaging / Storage / Shelf Life

Packaging: 18.9 l (5 gallon) pail.
Storage: store in original unopened containers at temperatures between 15°C - 25°C until ready for use. Keep the material out of direct sunlight until ready for application.
Shelf life: 12 months can be expected if stored in above-mentioned conditions. Shelf life information is only a recommendation and not a fact of life. The real expiration date highly depends on the history of storage and handling of the accessories. Quality and applicability should thus always be verified: when mixed, product should stir into a smooth and homogeneous blend with no evidence of major clumping or separation/phasing.

7. Precautions

Refer to Material Safety Data Sheet. Flammable. Keep away from fire and open flame and other possible ignition sources during storage and use. Do not smoke when using. Use only in well ventilated areas. Avoid prolonged contact with skin. Do not contaminate with foreign materials. For professional use only. Keep out of reach of children. Thinning is not allowed.

Modular Water Based Bonding Adhesive (WBA-3781)

1. Description

Modular Water Based Bonding Adhesive is a contact adhesive designed specifically for bonding Firestone RubberGard EPDM membranes to approved insulations in addition to wood, masonry and other acceptable substrates.

2. Preparation

Surfaces that will receive Firestone Bonding Adhesive must be clean, smooth, dry, free of sharp edges, loose and foreign materials, oil, grease, and other contaminants. The mating surface shall be cleaned with a brush or clean rag. Stir the adhesive thoroughly (to achieve a uniform mix with no sediment on the bottom and no marbling evident) before and during use. Restore the adhesive to room temperature prior to use, if exposed to temperatures lower than 15°C for a prolonged period.

3. Application

Apply Bonding Adhesive at about the same time to both the exposed underside of the sheet and the substrate to which it will be adhered so as to allow approximately the same drying time.
Apply Bonding Adhesive evenly avoiding areas of accumulation. Apply the Bonding Adhesive with a solvent resistant roller, and roll the adhesive onto the mating surfaces. When applying Bonding Adhesive, ensure complete uniform coverage of both surfaces that will be adhered. Care must be taken not to apply Bonding Adhesive over seam areas.
Bonding Adhesive can be dispensed by means of RoofTop SuperSpreader in order to achieve a more uniform coverage and obtain higher coverage rates.
Allow adhesive to flash off until tacky (time depending on ambient air conditions) prior to mating the surfaces. Test the adhesive for its dryness, using the touch-push test procedure.
As an alternative to the contact adhesion application method, outlined above, Water Based Bonding Adhesive may also be mated while still wet directly over plywood or OSB substrates only. Apply Water Based Bonding Adhesive over plywood or OSB with a solvent resistant paint roller, taking care to completely cover the plywood or OSB substrate evenly to avoid globs and puddles of adhesive. The EPDM membrane shall be mated as soon as possible after the bonding adhesive is applied by rolling the membrane in place over the plywood or OSB. To ensure proper adhesion, compress the bonded portion of the sheet to the substrate with a stiff push broom or heavy roller. The optional Wet Mating Method is only applicable when membrane is bonded indoors, not exposed to any wind stresses for 48 hours and not exposed to freezing temperatures for minimum 48 hours.

4. Coverage

Coverage rates depend on the smoothness of substrate and method of application.

- Contact Adhesive application: between 6 and 9 m² per gallon.
- Wet mating: between 8 and 10 m² per gallon.

5. Characteristics

Technical	■ Base	Latex
	■ Colour	White (when first applied) Translucent (when carrier evaporates)
	■ Solids (%)	49.0-52.5%
	■ Viscosity (cp)	16000-20000
	■ Specific gravity	1.0

6. Packaging / Storage / Shelf Life

Packaging: 18.9 l (5 gallon) pail.
Storage: store in original unopened containers at temperatures between 15°C - 25°C until ready for use. Keep the material out of direct sunlight until ready for application.
Shelf life: 12 months can be expected if stored in above-mentioned conditions. Shelf life information is only a recommendation and not a fact of life. The real expiration date highly depends on the history of storage and handling of the accessories. Quality and applicability should thus always be verified: when mixed, product should stir into a smooth and homogeneous blend with no evidence of major clumping or separation/phasing.

7. Precautions

Refer to Material Safety Data Sheet. Avoid prolonged contact with skin. Keep away from eyes. Thinning is not allowed.

SECTION 07 21 00

6" Roxul TopRock DD Roofing Insulation

ROXUL TopRock® DD

Technical Data Sheet
Roof Insulation 07220* Roof Insulation 07 22 00**
Mineral Wool Board Insulation 07 21 13**

ROXUL TOPROCK® DD

Flat Roof Insulation

Product Description & Application

ROXUL TOPROCK® DD is a duel density, mineral wool insulation board for flat roofing applications

	Performance	Test Standard
Compliance	Standard Specification for Mineral Fiber Roof Insulation Boards	ASTM C726
	Approval Standard for Single Ply, Polymer Modified Bitumen Sheet, Built-Up Roof and Liquid Applied Roof Assemblies for use in Class 1 and Noncombustible Roof Deck Construction	FM 4470
	NCC (Non Combustible Core) Rated Roof Insulation	FM 4470
Reaction to Fire	Flame spread index = 0 ; Smoke developed index = 0	ASTM E84 (UL 723)
	Flame spread index = 0 ; Smoke developed index = 0	CAN/ULC S102
	Determination of Non Combustibility of Building Materials - Non Combustible	CAN/ULC S114
	Standard Method of Fire Tests for Determining Heat Release Rate of Roofing Assemblies with Combustible Above Deck Roofing Components - Class 1	NFPA 276
	Fire Tests of Roof Coverings - Class A	CAN/ULC S107-03
	Fire Spread under Roof Deck Assemblies - See ULC Directory	CAN/ULC S126-06
	Standard Test Methods for Fire Tests of Roof Coverings - Class A	UL 790 (ASTM E108)
	Fire Tests of Building Construction and Materials - See UL Directory	UL 263 (ASTM E119)
Density	Top Layer - 13.75 lb/ft³ (220 kg/m³), Bottom Layer - 10 lb/ft³ (160 kg/m³)	ASTM C303
Dimensional Stability	Linear Shrinkage - 0.71% @ 1200°F (650°C)	ASTM C356
	Linear Change 7 days @ 40°F (-40°C), ambient RH - 0.1% Linear Change 7 days @ 200°F (93°C), ambient RH - 0.1% Linear Change 7 days @ 158°F (70°C), 97% RH - 0.0%	ASTM D2126
Hail Performance	Test Standard for Susceptibility to Hail Damage - Class 1 - SH (Severe Hail)	FM 4470
	Impact Resistance by Impacting with Freezer Ice Balls - Class 4	FM 4473
	Impact Resistance of Prepared Roof Covering Materials - Class 4	UL 2218

Thermal Resistance — ASTM C518 (C177)

Mean Temperature	R-Value	RSI Value
75°F (24°C)	3.8 hr.ft2.F/Btu	0.68 m2K/W
25°F (-4°C)	4.3 hr.ft2.F/Btu	0.74 m2K/W
40°F (4°C)	4.2 hr.ft2.F/Btu	0.72 m2K/W
110°F (43°C)	3.6 hr.ft2.F/Btu	0.64 m2K/W

	Performance	Test Standard
Reaction to Moisture	Moisture Sorption - 0.15%	ASTM C1104
	Water Absorption - <1.0%	ASTM C209
	Water Vapor Transmission, Desiccant Method - 2330 ng/Pa.s.m2 (41 perm)	ASTM E96
Compressive Strength	Top Layer - 20psi (140kPa) @ 10%, 37psi (250kPa) @ 25% Entire Board - 11psi (75kPa) @ 10%, 15psi (105kPa) @ 25%	ASTC C165
	Point Load @ 5mm Compression - 30psi (205 kPa)	EN 12430
Corrosion Resistance	Stress Corrosion Cracking Tendency of Austenitic Stainless Steel - Passed	ASTM C795
	Corrosion of Steel - Passed	ASTM C665
Thickness Dimensions	Product available in 2" - 6" (50.8mm - 152.4mm) in 1/2" (12.7mm) increments 48"x48" (1219mm x 1219mm)	

Acoustical Performance — ASTM C423

Thickness	125 Hz	250 Hz	500 Hz	1000 Hz	2000Hz	4000 Hz	NRC
2'	0.5	0.71	0.85	0.9	0.96	1.01	0.85

Contact ROXUL for STC rated assemblies — ASTM E90

FM APPROVED · UL LISTED · CLASSIFIED UL · MIAMI-DADE COUNTY APPROVED

Issued 04-01-16
Supersedes 07-05-13

NOTE: *Mast Format 1995 Edition **Master Format 2004 Edition. As ROXUL Inc has no control over installation design and workmanship, accessory materials or application conditions, ROXUL Inc. does not warranty the performance or results of any installation containing ROXUL Inc's products. ROXUL Inc's overall liability and the remedies available are limited by the general terms and conditions of sale. This warranty is in lieu of all other warranties and conditions expressed or implied, including the warranties of merchantability and fitness for a particular purpose.

ROXUL®
The Better Insulation™

ROXUL INC
8024 Esquesing Line
Milton, On. L9T 6W3
tel: 800-265-6878
fax: 800-991-0110
www.roxul.com

SECTION 07 61 00
Sheet Aluminum Flashing

SECTION 07 71 23
Integrated Gutter

SECTION 08 62 00
Operable Skylight

SECTION 08 10 00

Doors

SECTION 09 65 13

(R-Guard) Air Dam (Around Windows)

PROSOCO®

R•Guard

AIR & WATER BARRIER

AirDam®

INDOOR ADVANTAGE GOLD BUILDING MATERIALS

PROSOCO R-Guard® AirDam® is a gun-grade waterproofing sealant combining the best of silicone and polyurethane properties. Installed as the interior air sealant, AirDam® creates a long lasting, weather-tight seal that prevents moist outside air from entering, and conditioned indoor air from escaping around window and door assemblies. This ensures wind driven rain and condensed water are diverted to the flashing membrane and water resistive barrier before it can enter the living space.

This single component, Silyl-Terminated-Polymer (STP) is easy to gun and tool in all weather conditions. AirDam® is immediately waterproof and can be applied in unfavorable weather conditions to dry or damp substrates, eliminating many weather-related construction delays and accelerating the "drying in" of new buildings.

AirDam® cures quickly to produce a durable, high performance, high movement elastomeric sealant. Appropriate for exterior or interior use, AirDam® is easily applied with standard caulking tools. AirDam® bonds tenaciously and can be used with all types of window and door frame material – vinyl, wood or metal, including painted metal. As a properly applied interior window sealant, AirDam® can substantially reduce a building's heating and cooling costs.

SWR INSTITUTE
SEALANT • WATERPROOFING & RESTORATION INSTITUTE

Issued to: PROSOCO, Inc.
Product: PROSOCO R-GUARD® AirDam®

C719: Pass ✔ Ext:+25% Comp:-25%

Substrate: Vinyl, Anodized Aluminum, Wood
[all substrates were unprimed]

Validation Date: 9/11/13 – 9/10/18

No. 913-PRO918 *Copyright © 2013*

SEALANT VALIDATION
www.swrionline.org

ADVANTAGES

- **Solvent free. Isocyanate free. Complies with all AIM VOC regulations.**
- **Silane functional polymer provides superior long term adhesion, crack bridging and weathering characteristics.**
- **Bonds to most common building materials without priming.**
- **Produces a durable, weather-tight seal.**
- **Suitable for exterior or interior use.**
- **Stops penetration of air and water under normal and extreme weather conditions.**
- **Single component formulation saves time and requires no mixing.**
- **Easy to gun and tool in all climates.**
- **Bonds and cures in wet weather and on damp substrates.**
- **Compatible with most sealants and waterproofing or air barrier components.**
- **No shrinkage. No staining. Non-yellowing.**
- **Breathable – allows damp surfaces to dry.**
- **Will not support mold growth.**
- **Cured service temperatures: –75°F to 300°F. (–59°C to 149°C).**

Illustrations depicting the use of PROSOCO R-Guard products are available at www.prosoco.com by downloading the R-Guard Installation Guidelines.

Limitations

- Not for use bridging gaps more than 2 inches wide.
- Not for underwater applications.
- Not for applications in direct contact with strong acids or solvents.

REGULATORY COMPLIANCE

VOC Compliance

R-Guard AirDam® is compliant with the US Environmental Protection Agency's AIM VOC regulations. Visit www.prosoco.com/voccompliance to confirm compliance with individual district or state regulations.

TYPICAL TECHNICAL DATA

FORM	viscous white paste, mild odor
SPECIFIC GRAVITY	1.3–1.4
pH	not applicable
WT/GAL	11.24 lbs
TOTAL SOLIDS	98%
VOC CONTENT	30 g/L maximum
FLASH POINT	>200 ° F (>93° C)
FREEZE POINT	not applicable
SHELF LIFE	1 year in tightly sealed, unopened container

Cured Properties

Hardness, Shore A	15–25
Tensile Strength	85 psi
Elongation at Break*	>1000% (ASTM D 412)
Peel Strength	25 pli

*Elongation per ASTM D 412 is not a requirement of the Air Barrier Association of America's (ABAA) Acceptance Criteria for Liquid Applied Membranes nor is it a requirement of the International Code Council Evaluation Service's Acceptance Criteria for Water-Resistive Coatings used as Water-Resistive Barriers over exterior Sheathing (ICC-ES AC212). Elongation is not a requirement of the AAMA 714 Specification for Liquid Applied Flashing used to Create a Water-Resistive Seal Around Exterior Wall Openings. There is no data to support that certain levels of elongation must be achieved to perform as a fluid applied WRB or as a fluid applied flashing. Specifications should be based upon performance test results like those required from the referenced organizations.

SAFETY INFORMATION

Always read full label and SDS for precautionary instructions before use. Use appropriate safety equipment and job site controls during application and handling.

24-Hour Emergency Information:
INFOTRAC at 800-535-5053

PREPARATION

Protect people, vehicles, property, plants, and all other surfaces not intended to receive AirDam®. Surfaces must be structurally sound and free of any surface contaminants, chemical residues, surface coatings or films that may adversely affect adhesion. Pressure-treated wood and other contaminated surfaces should be cleaned with an Isopropyl Alcohol wipe and allowed to flash-off before application of R-Guard products.

Joint Preparation

For joints less than one-half (½) inch wide, sealant depth should be equal to the width of the joint.

For joints ranging from one-half (½) to one (1) inch wide, sealant depth should be approximately one-half (½) the joint width.

In deep joints, control sealant depth by installing closed cell backer rod. The diameter of soft backer rod should be 25% greater than the joint width. Do not puncture backer rod.

Where joint depth does not permit use of a backer rod, install bond breaker tape to prevent three point bonding.

Surface and Air Temperatures

Surface and ambient temperatures should be 32°F (0°C) and rising and below 110°F (43°C) during application and drying. If air or surface temperatures exceed 95°F (35°C), apply to shaded surfaces and before daytime air and surface temperatures reach their peak. See Best Practices for hot weather installation instructions.

Though AirDam® may be applied to damp surfaces and tolerates rain immediately after application, do not apply to surfaces with standing water or frost. *Contact PROSOCO if conditions are questionable.*

Equipment

Apply using standard caulking tools.

To tool the product, use a DRY joint knife slightly wider than the gap or joint opening. Do not use soapy water or solvent to help with the tooling process or to slick the surface profile.

Storage & Handling

Store in a cool, dry place. Keep container tightly closed when not in use. Do not open cartridges or sausages until preparation work has been completed. Do not alter or mix with other chemicals. When stored at or below 80°F (27°C), AirDam® has a shelf life of 12 months after the date of manufacture. This shelf life assumes upright storage of factory-sealed containers. Do not double-stack pallets. Keep out of the reach of children. Dispose of in accordance with local, state and national regulations.

APPLICATION

Before use, read "Preparation" and the Safety Data Sheet. ALWAYS TEST each surface for suitability and desired results before overall application. Use the following application instructions. Let the surface dry thoroughly before inspection and approval.

Dilution & Mixing

Apply as packaged. Do not dilute or alter, or use for applications other than specified. AirDam® is ready to use. No mixing is required.

Coverage Rates

Coverage varies depending on the width and depth of joints. When overlapping onto adjacent surfaces, rough surface irregularities will reduce coverage. Use the table below as a guideline when estimating sealant requirements.

JOINT SIZE (D x W)	Linear Feet Sealed	
	20-oz Sausage	10.3-oz Cartridge
3/16 x 1/4 inches	64	33
3/16 x 1/2 inches	32	16
1/4 x 1/4 inches	48	25
1/4 x 1/2 inches	24	12
3/8 x 3/8 inches	21	11
3/8 x 5/8 inches	13	6.6
1/2 x 1/2 inches	12	6.2
1/2 x 3/4 inches	8	4.1

Application Instructions

1. Using a professional grade caulking gun, install sealant in a continuous bead without gaps or air pockets.
2. Tool sealant immediately to ensure complete wetting of joint bond surface and to produce a smooth, concave joint profile flush with the edges of adjacent surfaces. DO NOT use water, soapy water or solvent to tool. Avoid over tooling. Where horizontal and vertical surfaces meet, tool sealant to create a slight cove which will not trap moisture or debris.

Curing and Drying

AirDam® cures at the rate of 1/8 inch of depth per day. High humidity accelerates curing and drying time.

Cleanup

Clean tools and equipment immediately with mineral spirits or similar solvent.

BEST PRACTICES

AirDam® bonds tenaciously. Carefully protect all nearby surfaces not intended to be treated. Immediately clean up incidental contact using mineral spirits or similar solvent.

Use as is. Do not thin or alter in any way.

Apply using a professional caulking gun. To tool the product, use a DRY joint knife slightly wider than the gap or joint opening. Do not use soapy water or solvent to help with the tooling process or to slick the surface profile. Avoid over tooling.

Allow for drying time based on temperature and humidity. AirDam® cures at the rate of 1/8 inch of depth per day. High humidity decreases dry-time. Low temperatures and low relative humidity will extend cure time.

Hot Weather Installations: when practical install AirDam® to shaded surfaces. When conditions are hot and dry, cool and dampen the surface with a fresh water mist. Allow standing water to dry before installation.

PROSOCO R-Guard® Joint & Seam Filler, FastFlash® and AirDam® are recommended for improved performance of R-Guard Cat 5®, Cat 5® Rain Screen, Spray Wrap MVP and VB water-resistive barrier coatings.

Illustrations depicting the use of R-Guard products are available at www.prosoco.com by downloading the R-Guard Installation Guidelines.

To schedule field technical support, contact your PROSOCO Technical Customer Care toll-free at 800-255-4255. Field visits by PROSOCO personnel are for the purpose of making technical recommendations only. **PROSOCO is not responsible for providing job site supervision or quality control**. Proper application is the responsibility of the applicator.

WARRANTY

The information and recommendations made are based on our own research and the research of others, and are believed to be accurate. However, no guarantee of their accuracy is made because we cannot cover every possible application of our products, nor anticipate every variation encountered in masonry surfaces, job conditions and methods used. The purchasers shall make their own tests to determine the suitability of such products for a particular purpose.

PROSOCO, Inc. warrants this product to be free from defects. **Where permitted by law, PROSOCO makes no other warranties with respect to this product, express or implied, including without limitation the implied warranties of merchantability or fitness for particular purpose**. The purchaser shall be responsible to make his own tests to determine the suitability of this product for his particular purpose. PROSOCO's liability shall be limited in all events to supplying sufficient product to re-treat the specific areas to which defective product has been applied. Acceptance and use of this product absolves PROSOCO from any other liability, from whatever source, including liability for incidental, consequential or resultant damages whether due to breach of warranty, negligence or strict liability. This warranty may not be modified or extended by representatives of PROSOCO, its distributors or dealers.

CUSTOMER CARE

Factory personnel are available for product, environment and job-safety assistance with no obligation. Call 800-255-4255 and ask for Customer Care – technical support.

Factory-trained representatives are established in principal cities throughout the continental United States. Call Customer Care at 800-255-4255, or visit our web site at www.prosoco.com, for the name of the PROSOCO representative in your area.

PRODUCT TEST RESULTS
R-Guard AirDam

ASTM C 920: Standard Specification for Elastomeric Joint Sealants			
TEST	**METHOD**	**CRITERIA**	**RESULTS**
Rheological Properties	ASTM C 639	Vertical Slump at 40± 3.6° F must be ≤ 3/16” Vertical Slump at 122± 3.6° F must be ≤ 3/16” Horizontal Slump at 40± 3.6° F, no deformation Horizontal Slump at 122± 3.6° F, no deformation	Pass: 0 Pass: 0 Pass: no deformation Pass: no deformation
Extrusion Rate	ASTM C 1183 Procedure A	Report Specific Gravity Extrusion Rate ≥ 10.0 mL/min	1.4 96.9 mL/min
Application Life: Type M, Grade P Only	ASTM C 1183 Procedure A	Not applicable for Type S, Grade NS	Not applicable
Hardness	ASTM C 661	Indentation Hardness <60	Pass: 18
Effects of Heat Aging	ASTM C 1246	Percent Weight Loss ≤7% Visual Examination for presence of cracks or chalking	Pass: 0.98% Pass: no cracking or chalking
Tack-Free Time	ASTM C 679	< 72 hours	Pass: 1.7 hours
Stain and Color Change	ASTM C 510	No visible stain or color change	Pass
Adhesion and Cohesion Under Cyclic Movement	ASTM C 719	Aggregate loss in bond and cohesion ≤1½ in^2	Pass 0 on vinyl 0 on aluminum 0 on wood
Adhesion-in-Peel	ASTM C 794	Aggregate loss in bond and cohesion ≥5 lbf	Pass 10.4 lbf on vinyl 13.7 on aluminum 10.5 on wood
Adhesion-in-Peel exposed to UV through glass	ASTM C 794 ASTM C 1442	Aggregate loss in bond and cohesion ≥5 lbf	≥5 lbf
Effects of Accelerated Weathering	ASTM C 793 ASTM C 1442	Visual inspection for cracking after accelerated weathering and after cold exposure and low temperature bend ≤ Example #2 in ASTM C 793	Pass: no cracking
Sealant, Waterproofing and Restoration Institute’s Product Validation Program			
Adhesion and Cohesion Under Cyclic Movement (±25%)	ASTM C 719	Aggregate loss in bond and cohesion ≤1½ in^2	Pass 0 on vinyl 0 on aluminum 0 on wood
Other (R-Guard AirDam® tested as part of an assembly)			
Air Leakage of Air Barrier Assemblies	ASTM E 2357	≤ 0.2 L / s·m^2 at 75 Pa (≤ 0.04 cfm / ft^2 at 1.57 psf)	Pass: <0.001 L / s·m^2 at 75 Pa (0.0002 cfm / ft^2 at 1.57 psf)

All testing was completed by independent, accredited laboratories.

SECTION 09 93 23.13
White Interior Stain
Penofin-Verde Oil-Natural (Wood Sealer)

PENOFIN VERDE

Odorless Zero VOC Interior/ Exterior Formula

Less than .1 gram per liter. Verde can be safely and effectively used in both exterior and interior applications. It is virtually odorless, containing no toxins or heavy metal compounds and has no discernable off-gassing properties.

Twice the Coverage

Verde covers 250-500 sq. ft. per gallon depending on the texture and condition of the wood

Deeply Penetrating Formula

High Performance, deep penetrating formula using our Brazilian Rosewood Oil creates a highly durable finish that lasts, with the same effortless maintenance of our other Penofin products! Never strip or sand again. Simply clean the wood and apply a light coat to enhance or restore the wood's natural beauty.

Easy Soap and Water Clean Up

Because Verde contains only natural vegetable based ingredients it is easily cleaned with soap and water.

Safe to Use Around Children and Animals

Verde dries to the touch in four hours and leaves no harmful residue. Safe for play equipment and animal shelter.

Performance Coatings Inc
Ukiah, California

Penofin The World's Finest Wood Finish ®

Product Data Sheet

VERDE Quality, Beauty, Durability

A semi-transparent, penetrating oil finish manufactured to the highest environmental standard. It contains no petroleum bi-products and it is completely safe for use around children and animals. Containing no hazardous substances, Verde uses new green technology and materials which are made from sustainable plant based ingredients. Verde is the (eco) logical choice of architects, green building contractors, woodworking professionals and environmentally conscious consumers.

Penofin Verde contains only sustainable ingredients. It is virtually odorless, and does not off gas. It exceeds all environmental air quality standards and meets LEED criteria for Green Building.

The highest quality Brazilian Rosewood and other natural oils are combined with select vegetable ester solvents and zero VOC pigments resulting in a finish that is as durable as it is beautiful.

PERFORMANCE FEATURES:

- Non-Hazardous
- Non-Film Forming
- VOC <.1 g/l
- Virtually Odorless
- 99% UV Protection
- Interior/Exterior Use
- Dries to touch in 4 hrs
- Natural Oil Beauty
- Preserves and Protects
- Extends Life of Wood

VERDE APPLICATIONS:

- Wood Decks
- Log Homes
- Exterior Siding
- Furniture
- Fences
- Wood Art
- Cabinetry
- Spas
- Docks
- Floors
- Doors
- Windows

TECHNICAL DATA:

VOC: <.1 g/l
Odor: very mild to none
Bio-Based Content: > 95%
Installation Temperature: 45° F (7 C) to 80° F (26 C). Relative Humidity: 85% maximum, below, below 80% for best results.
Dry to Touch: 4 hours
Serviceable: 12 hours
Full Cure: 4-7 days

APPLICATION:

Apply to clean, dry, bare wood. The wood may be cleaned initially with **Penofin Pro-Tech Cleaner Step 2**. New wood can be dirty from transport and construction, and should be cleaned before application. Always test an inconspicuos area to ensure proper surface preparation and color selection.

Stir this product thouroughly before and during application. Apply at temperatures above 45° . Verde is stable under freeze/ thaw conditions. For optimum performance bring the stain to room temperature before application. Do not apply if the wood is hot to the touch. Using a brush, pad, or pump sprayer apply a liberal coat to the wood. Protect, tarp or mask off any adjacent areas you do not wish to stain. **Verde is a penetrating finish and will penetrate any pourus surface.** Allow Verde 10-20 minutes to penetrate into the wood. This step is important as it allows the finish to coat the individual fibers of the wood, protecting your investment from the inside out.

After 10-20 minutes wipe the surface thouroughly with clean lint free cloths to remove any excess finish. **Verde is a penetrating finish and is not a surface coating. Not wiping will allow the finish to dry on the surface of the wood and will result in a tacky finish. Soak any wiping cloths in a bucket of water to avoid the possibility of spontaneous combustion which can occur with any oil based product.**

CLEAN-UP:

Soap & Water

DRY TIME:

Verde will dry to the touch in 4 hours and is servicable after 12 hours.

MAINTENANCE:

Exterior Application:

Keep the wood clean, free of debris or standing water for long periods of time. Twice yearly, clean the surface with **Penofin Pro -Tech Cleaner Step 2**. Follow with **Penofin Pro-Tech Brightener Step 3**, if wood has grayed or started to darken. Allow the wood to dry and simply coat any areas that might show wear or tear from furniture or scratches with another light application of Verde.

Interior Application:

Sweep, dust or vacuum regularly and clean with a damp mop or rag.

Please visit our website www.penofin.com for more application & wood care tips, or call our live customer service line at:

1 800 PENOFIN Monday—Friday 7-4 Pacific Time, or email us at mail@penofin.com.

SECTION 10 28 23.13

Iron

Ironing Board

4

Häfele Ironfix®

- Turning mechanism; swivel range 180º
- Locks in left, right, or inclined position

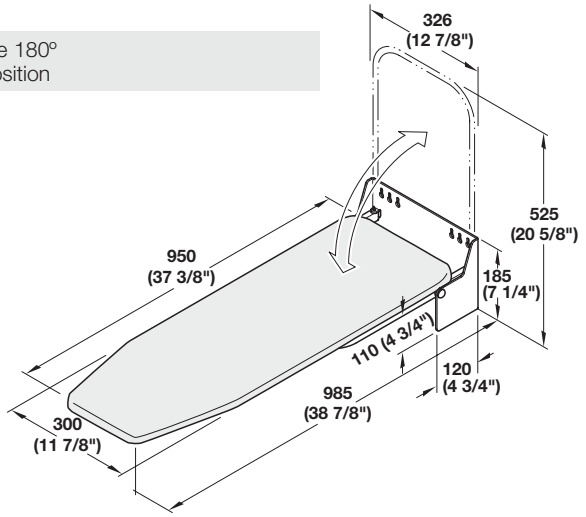

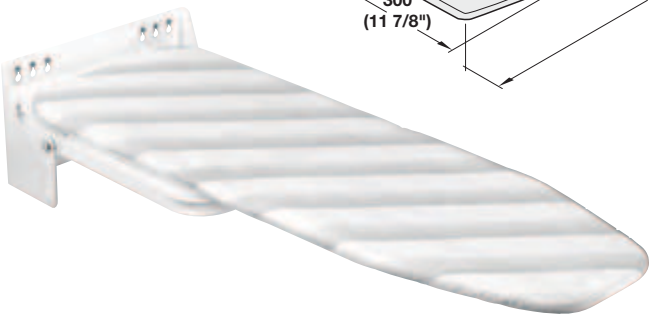

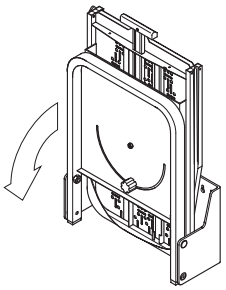

Wall-Mounted Ironing Board

Material: Steel, epoxy-coated; Cover: Natural White Cotton with gray stripes, foam-backed

Color	Item No.
white RAL 9016	568.66.700

Supplied With
Installation hardware

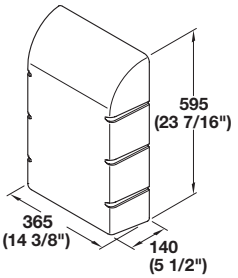

Wall Cover, optional

Material: Polystyrene

Color	Item No.
white RAL 9016	568.66.790

Replacement Heat-Resistant Cover

- For ironing board with elastic band

Material: Natural Cotton, foam-backed

Color	Item No.
white/gray striped	568.60.907

Dimensions in mm
Inches are approximate

Dimensional data not binding. We reserve the right to alter specifications without notice.

SECTION 11 28 13

Computer

Tablet

SECTION 11 31 00
Residential Appliances

24" Counter-Depth Bottom-Freezer

500 Series – Stainless Steel B11CB50SSS

BOSCH
Invented for life

B11CB50SSS
Stainless Steel

The specifically engineered hidden hinge and reversible doors allow for a next-to-wall placement and nearly flush installation.

Features & Benefits

- The LED lighting shines exceptionally bright and saves energy.
- Ideal for compact kitchen layouts in metropolitan areas.
- The HydroFresh drawer keeps fruit and vegetables fresh longer.
- ENERGY STAR® qualified for energy efficiency.
- Use the wine rack to store your favorite wine bottles.

General Properties	
Reversible door hinge	Yes
Water filter	No
Lighting	LED
Defrost process refrigerator section	Frost-free
Number of shelves – refrigerator	3
Adjustable shelves – refrigerator	2
Shelf material – refrigerator	Tempered glass
Type of shelves – refrigerator	Spill-proof glass
Door storage bins	3
Humidity control drawer	1
Defrost process freezer section	Automatic
Number of drawers – freezer	3
Adjustable shelves – freezer	N/A
Shelf material – freezer	Metal
Type of shelves – freezer	Wire
Ice maker	No
Quick ice	N/A
Capacity	
Total unit gross capacity (cu. ft.) – AHAM	11 cu. ft.
Refrigerator gross capacity (cu. ft.)	7.7 cu. ft.
Freezer gross capacity (cu. ft.)	3.3 cu. ft.

Technical Details	
Current (A)	15 A
Volts (V)	120 V
Frequency (Hz)	60 Hz
Power cord length (in.)	94"
Plug type	120V-3 prong
Dimensions & Weight	
Appliance dimensions (H x W x D) (in.)	78 7/8" x 23 1/2" x 23 7/8"
Required cutout size (H x W x D) (in.)	79 1/2" x 24" x 24"
Net weight (lbs)	181 lbs
Efficiency	
ENERGY STAR® qualified	Yes
Energy consumption (kWh/yr)	357 kWh
Accessories–Included	
Included	Wine rack, ice tray, egg tray, bottle holder

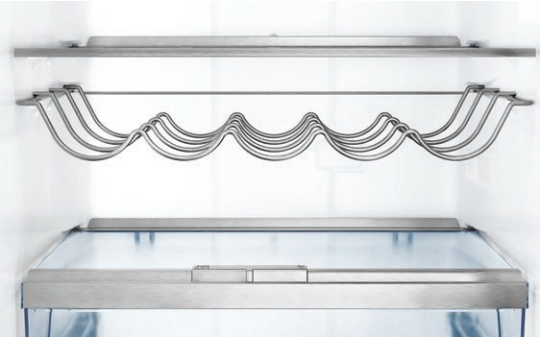

ENERGY STAR 2016
Emerging Technology Award

Most Efficient 2016
ENERGY STAR www.energystar.gov

For help and assistance with Bosch accessories please visit: www.bosch-eshop.com/eshop/bosch/us or call 1-800-944-2904 Mon-Fri 5am to 6pm PST Sat 6am to 3pm PST

Notes: All height, width and depth dimensions are shown in inches. BSH reserves the absolute and unrestricted right to change product materials and specifications, at any time, without notice. Consult the product's installation instructions for final dimensional data and other details prior to making cutout. Applicable product warranty can be found in accompanying product literature or you may contact your account manager for further details.

Warranties: Bosch warrants that the Product is free from defects in materials and workmanship for a period of three hundred and sixty-five (365) days from the date of purchase. The foregoing timeline begins to run upon the date of purchase, and shall not be stalled, tolled, extended, or suspended, for any reason whatsoever. This Product is also warranted to be free from cosmetic defects in material and workmanship (such as scratches of stainless steel, paint/porcelain blemishes, chip, dents, or other damage) to the finish of the Product, for a period of thirty (30) days from the date of purchase or closing date for new construction. This cosmetic warranty excludes slight color variations due to inherent differences in painted and porcelain parts, as well as differences caused by kitchen lighting, product location, or other similar factors. This cosmetic warranty specifically excludes any display, floor, "As Is", or "B" stock appliances.

For more information on our entire line of products, go to www.bosch-home.com/us or call 1-800-944-2904

© BSH Home Appliances Corporation. All rights reserved. Bosch is a registered trademark of Robert Bosch GmbH.

24" Counter-Depth Bottom-Freezer

500 Series – Stainless Steel B11CB50SSS

BOSCH
Invented for life

Installation Details

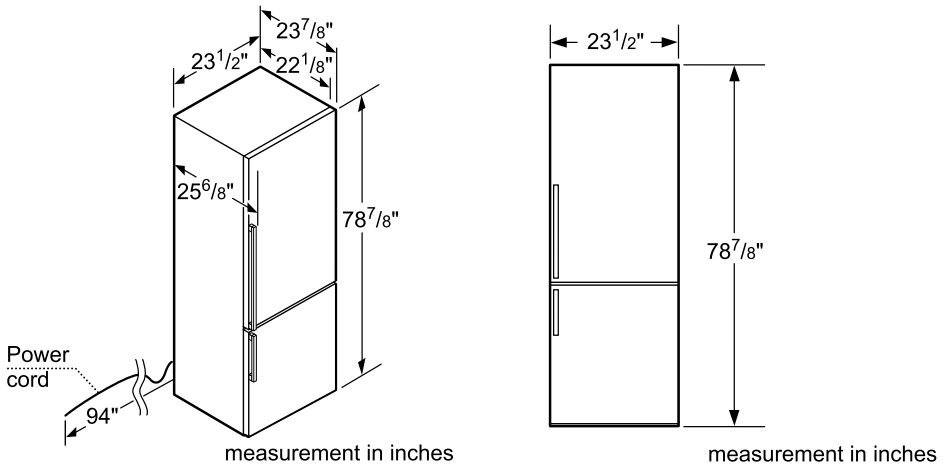

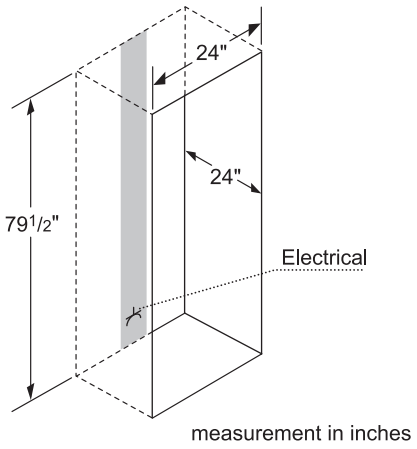

For help and assistance with Bosch accessories please visit: www.bosch-eshop.com/eshop/bosch/us or call 1-800-944-2904 Mon-Fri 5am to 6pm PST Sat 6am to 3pm PST

Notes: All height, width and depth dimensions are shown in inches. BSH reserves the absolute and unrestricted right to change product materials and specifications, at any time, without notice. Consult the product's installation instructions for final dimensional data and other details prior to making cutout. Applicable product warranty can be found in accompanying product literature or you may contact your account manager for further details.

Warranties: Bosch warrants that the Product is free from defects in materials and workmanship for a period of three hundred and sixty-five (365) days from the date of purchase. The foregoing timeline begins to run upon the date of purchase, and shall not be stalled, tolled, extended, or suspended, for any reason whatsoever. This Product is also warranted to be free from cosmetic defects in material and workmanship (such as scratches of stainless steel, paint/porcelain blemishes, chip, dents, or other damage) to the finish of the Product, for a period of thirty (30) days from the date of purchase or closing date for new construction. This cosmetic warranty excludes slight color variations due to inherent differences in painted and porcelain parts, as well as differences caused by kitchen lighting, product location, or other similar factors. This cosmetic warranty specifically excludes any display, floor, "As Is", or "B" stock appliances.

For more information on our entire line of products, go to www.bosch-home.com/us or call 1-800-944-2904

© BSH Home Appliances Corporation. All rights reserved. Bosch is a registered trademark of Robert Bosch GmbH.

en Installation instructions
Free-standing appliance

fr Notice de montage
Appareil indépendant

es Instrucciones de montaje
Aparato de libre instalación

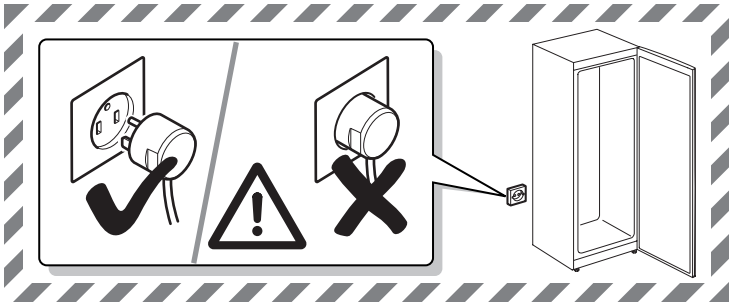

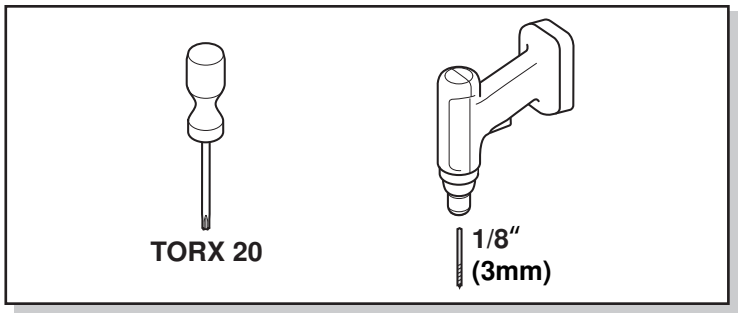

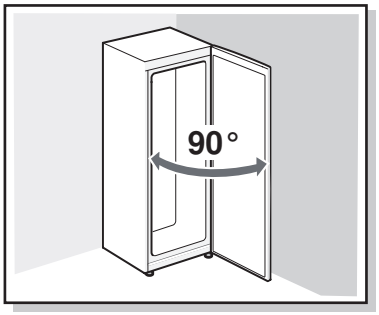

9000 918 317 (9307)

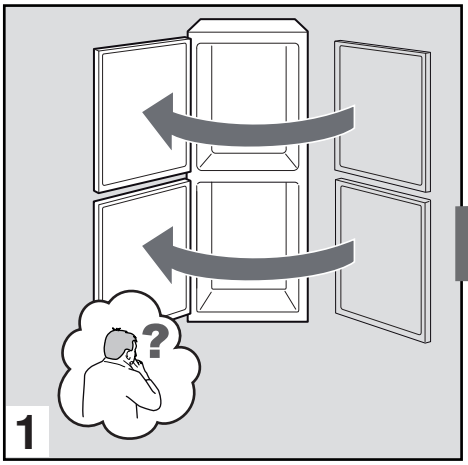

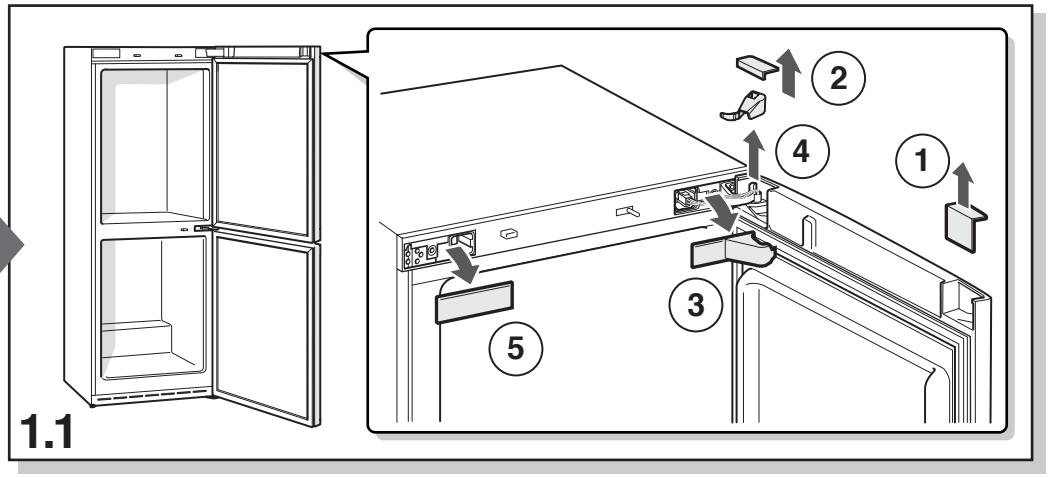

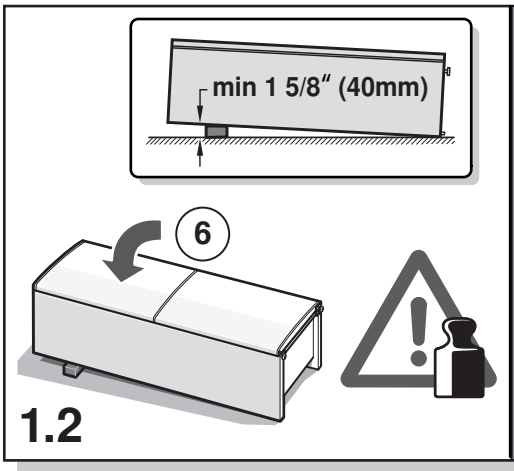

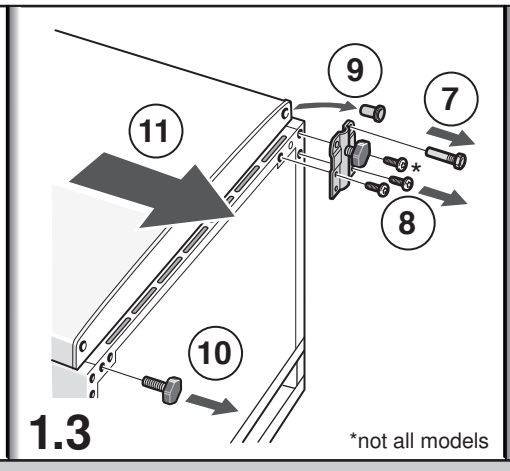

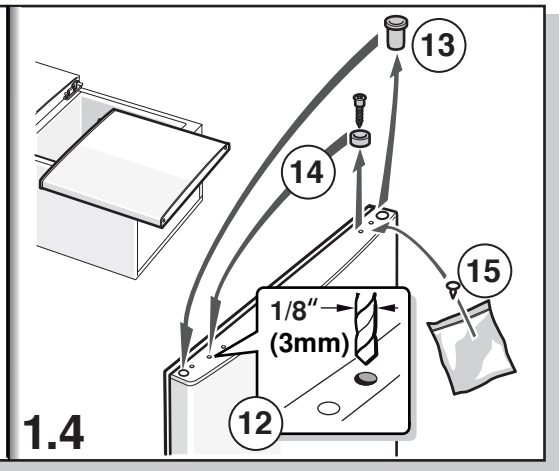

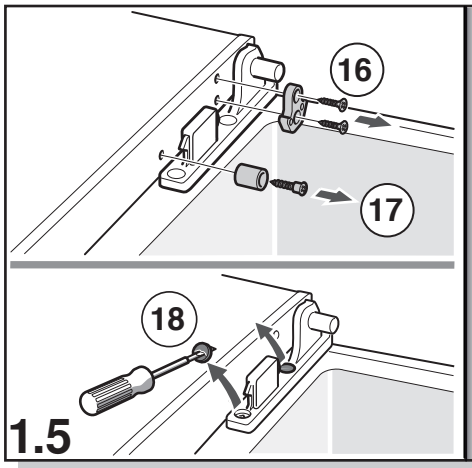
16
17
18
1.5

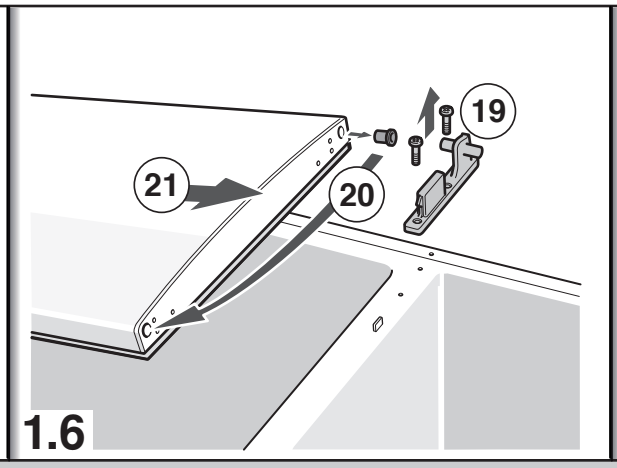
19
20
21
1.6

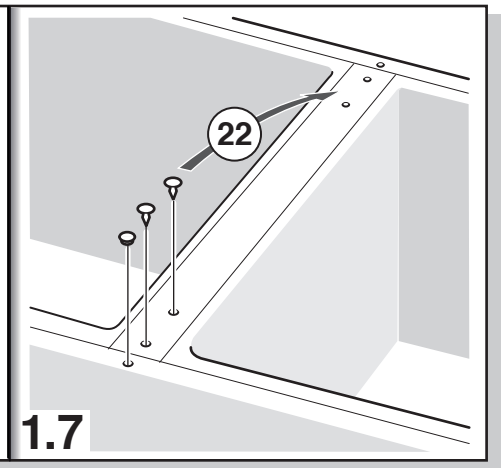
22
1.7

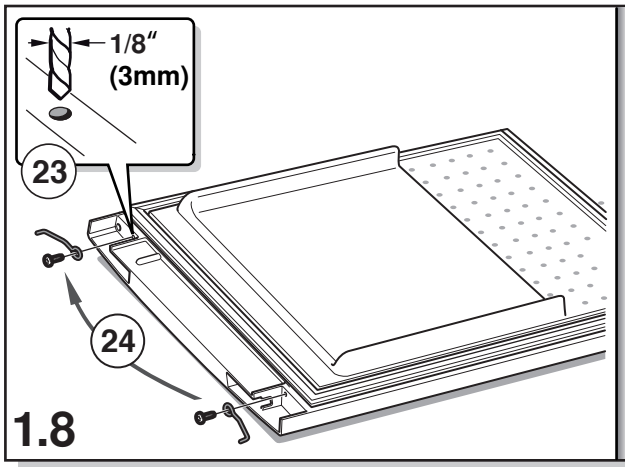
1/8"
(3mm)
23
24
1.8

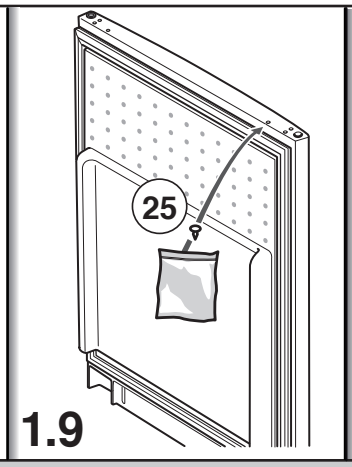
25
1.9

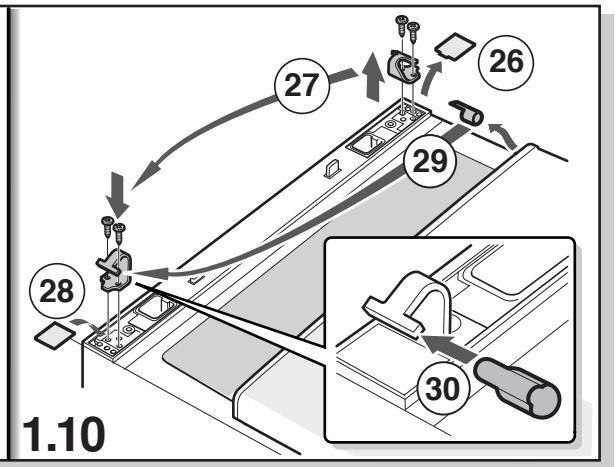
26
27
29
28
30
1.10

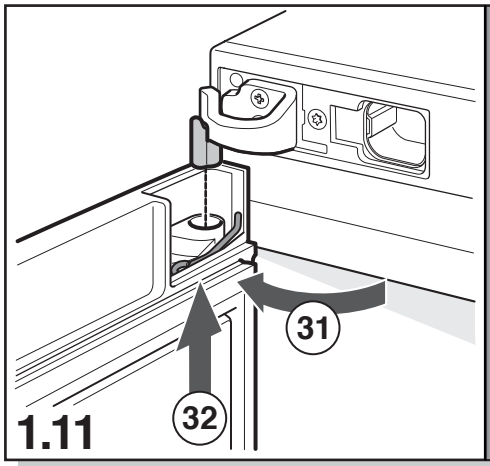
31
32
1.11

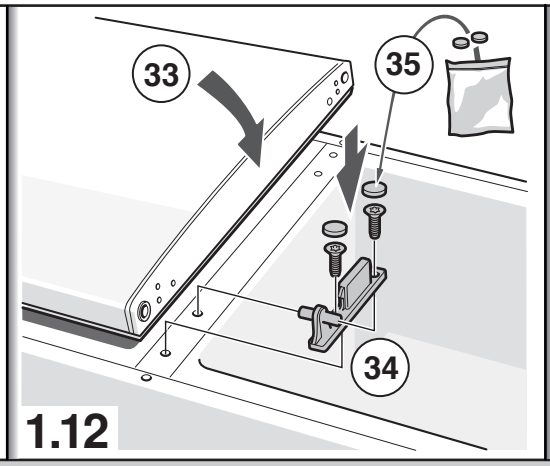
33
35
34
1.12

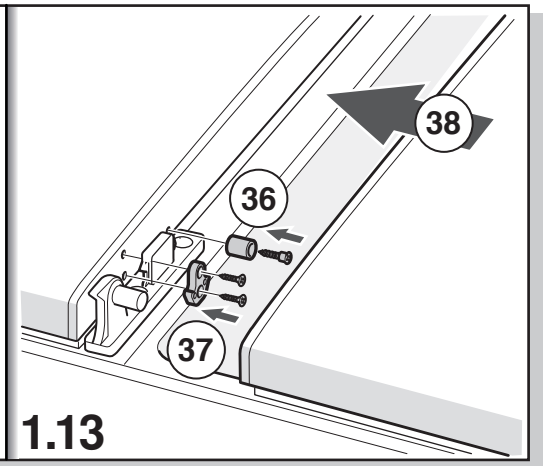
38
36
37
1.13

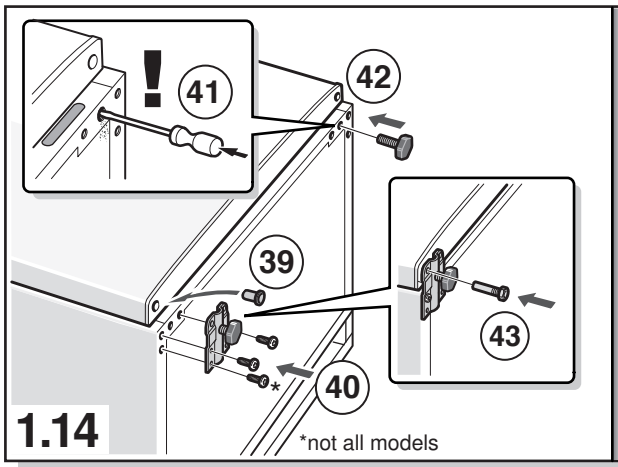
41
42
39
43
40
*
1.14
*not all models

44
1.15

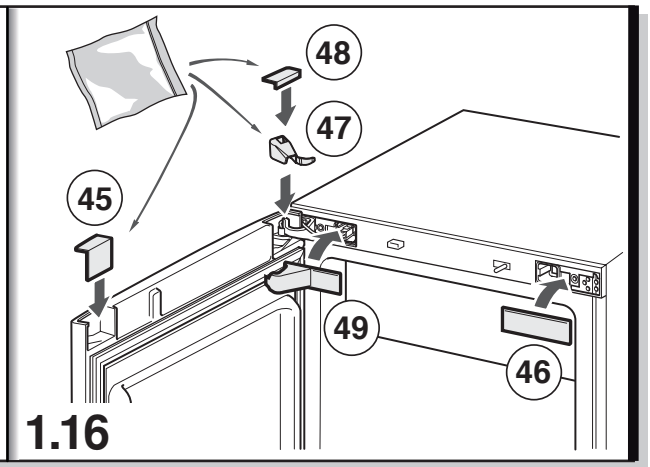
48
47
45
49
46
1.16

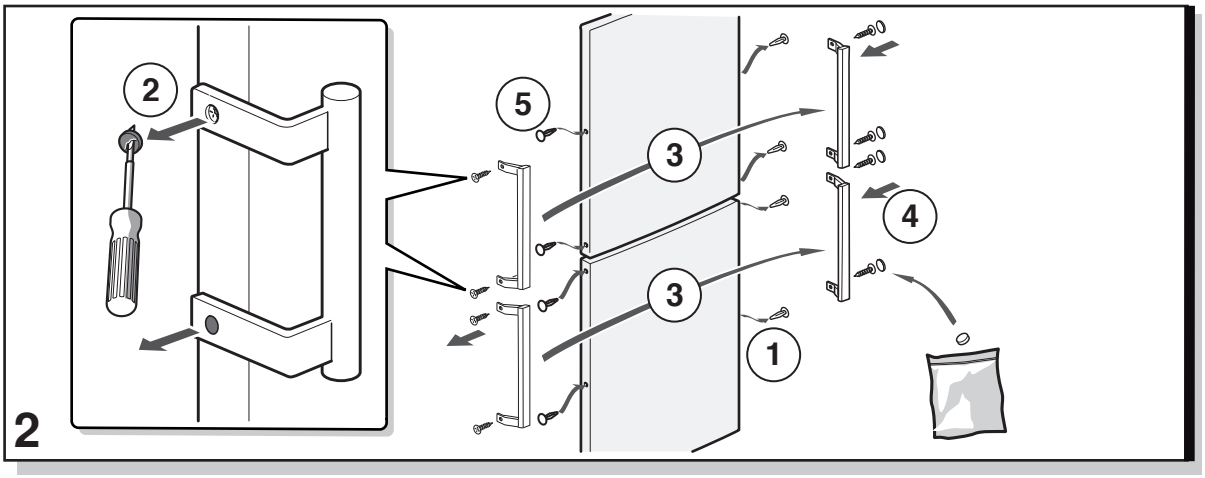
2
5
3
3
4
1
2

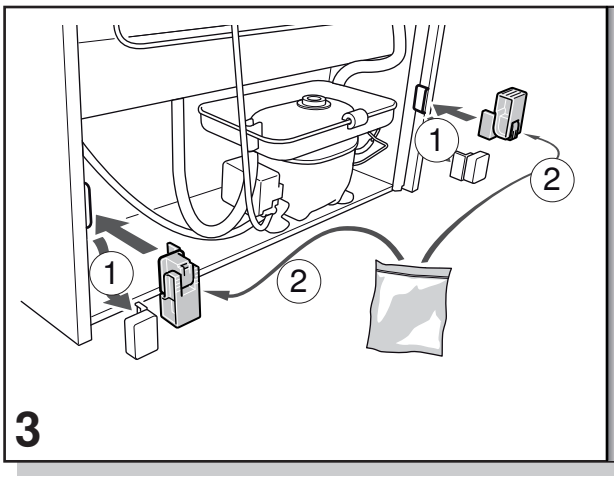
1
2
1
2
3

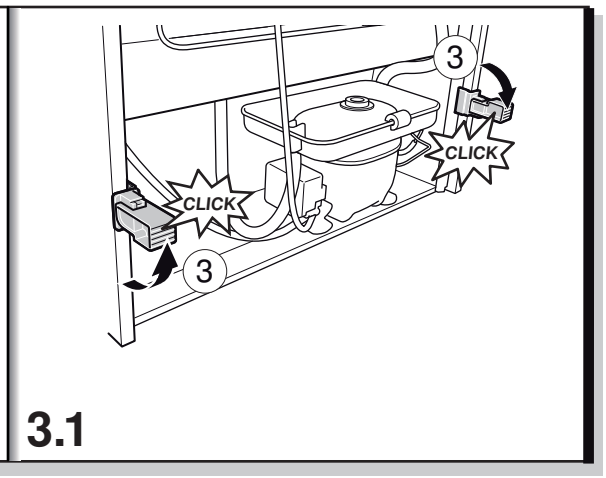
3
CLICK
CLICK
3
3.1

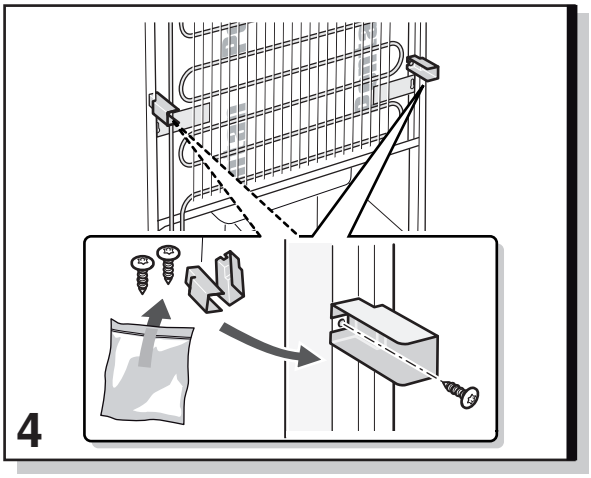
4

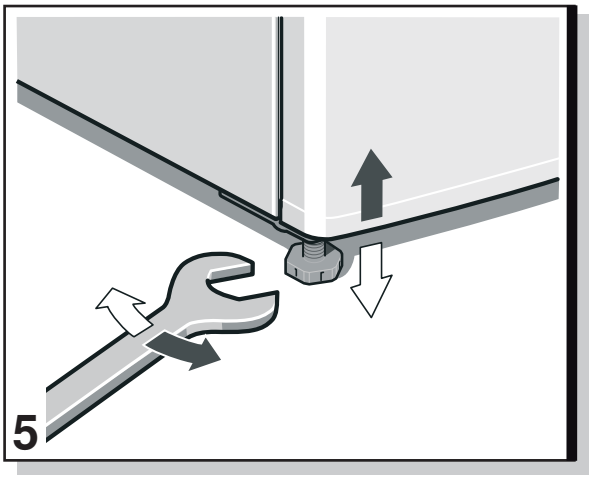
5

INSTALLATION INSTRUCTIONS

MASTERPIECE® SERIES INDUCTION COOKTOP

Thermador®
REAL INNOVATIONS FOR REAL COOKS

INSTALLATION INSTRUCTIONS

Cooktop
Surface de cuisson
Placa

Models/Modèle/Modelo

CIT304KBB
CIT304KM
CIT365KBB
CIT365KM

Table of Contents 3
Table de Matières 14
Contenido 25

Thermador®
REAL INNOVATIONS FOR REAL COOKS

Table of contents

Important Safety Instructions **4**
Before you begin **5**
Tools and parts needed 5
Parts included 5
Preparation 6
Installation procedure **9**
Installing the heat shield 9
Secure the cooktop to countertop 10
Electrical installation 11
Test the installation 12
Technical service **13**

Important Safety Instructions

READ AND SAVE THESE INSTRUCTIONS

Important

SAVE THESE INSTRUCTIONS FOR LOCAL INSPECTOR'S USE

THIS APPLIANCE MUST BE INSTALLED BY A QUALIFIED TECHNICIAN

LEAVE THESE INSTRUCTIONS WITH THE APPLIANCE AFTER INSTALLATION IS COMPLETE.

WARNING: If the information in this manual is not followed exactly, fire or shock may result causing property damage or personal injury.

WARNING: Do not repair or replace any part of the appliance unless specifically recommended in the manual. Never modify or alter the construction of the appliance.
Improper installation, technical service or maintenance can cause injury or property damage. Refer to this manual. Consult with a factory authorized service center for all repairs.

Remove all tape and packaging before using the appliance. Destroy the packaging after unpacking the appliance. Never allow children to play with packaging material.

Safe appliance handling

Hidden surfaces may have sharp edges. Use caution when reaching behind or under appliance.

Electrical safety

Before installing, turn off at the service panel. Lock service panel to prevent power from being turned on accidentally.

The circuit breaker should have a contact separation of at least 3 mm. on all poles.

Be sure your appliance is properly installed and grounded by a qualified technician.

Have the installer show you the location of the circuit breaker or fuse. Mark it for easy reference.

This appliance has been tested in accordance with ANSI/UL 858 Standard for Safety for Household Electric Ranges and CAN/CSA–22.2 No. 61 National Standard of Canada for Household Cooking Ranges. It is the responsibility of the owner and installer to determine if additional requirements and standards apply in specific installations.

Related equipment safety

This stove is guaranteed safe for use only if it is installed by a specialist pursuant to the installation instructions. The installer is responsible for any damage caused due to improper installation.

To eliminate the risk of burns or fire when touching hot surface units, avoid leaving storage space in the cabinets over the surface units. In the event of presence of storage in cabinets, the risk can be reduced by installing a hood that extends horizontally at least 5 inches (12.7 cm) from the cabinet bottom.

Do not install refrigerators, dishwashers, unvented ovens, or washers that may fit below the cooktop.

Note: We strongly recommend the installation of a ventilation system with this appliance.

Before you begin

Tools and parts needed

- Phillips head screwdriver
- Pencil
- Drill with 1/4” (6.35 mm) bit
- Jigsaw
- Tape measure

Note: Additional materials may be necessary for installation in solid surface countertops. Contact the countertop manufacturer.

Parts included

- Hold down brackets (4)
- Clamping screws #10–32 x 2 1/2” (63.8 mm) (4)
- Sheet metal screws #8 x 3/8” (9.5 mm) (4)

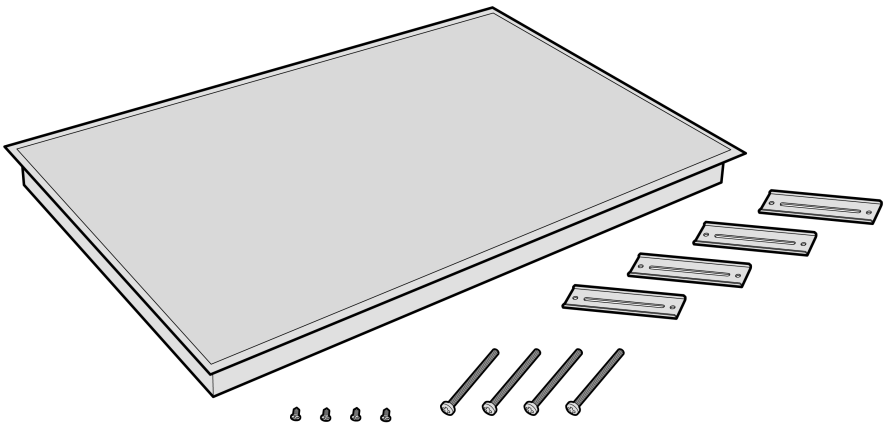

Preparation

Countertop requirements

WARNING: To reduce the risk of ignition of nearby combustible materials, install the countertop with a minimum distance of 2” (51mm) from both side walls and the back wall.

Note

The work surface should be horizontal and level. The stability of the countertop should be confirmed even after making the cutout.

After preparing cutout, remove shavings as they can affect the function of electrical components.

Seal the surfaces of the cutout to make them heat resistant. This prevents the surfaces from expanding as a result of humidity.

Solid surface countertops often require special installation. For example, heat reflective tape or rounded corners may be necessary. Contact the countertop manufacturer for instructions specific to your countertop.

30” Models: CIT304...

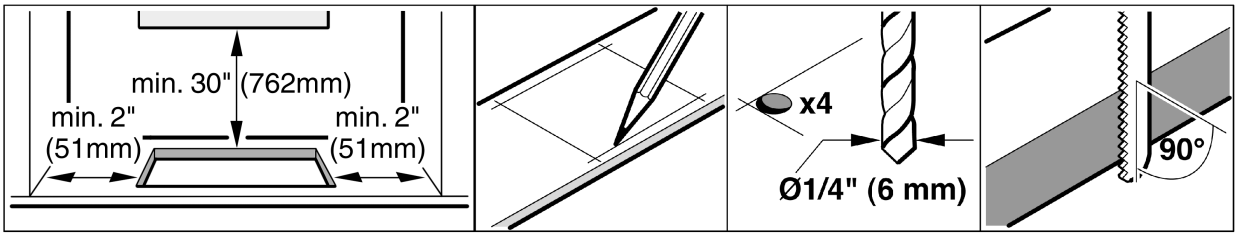

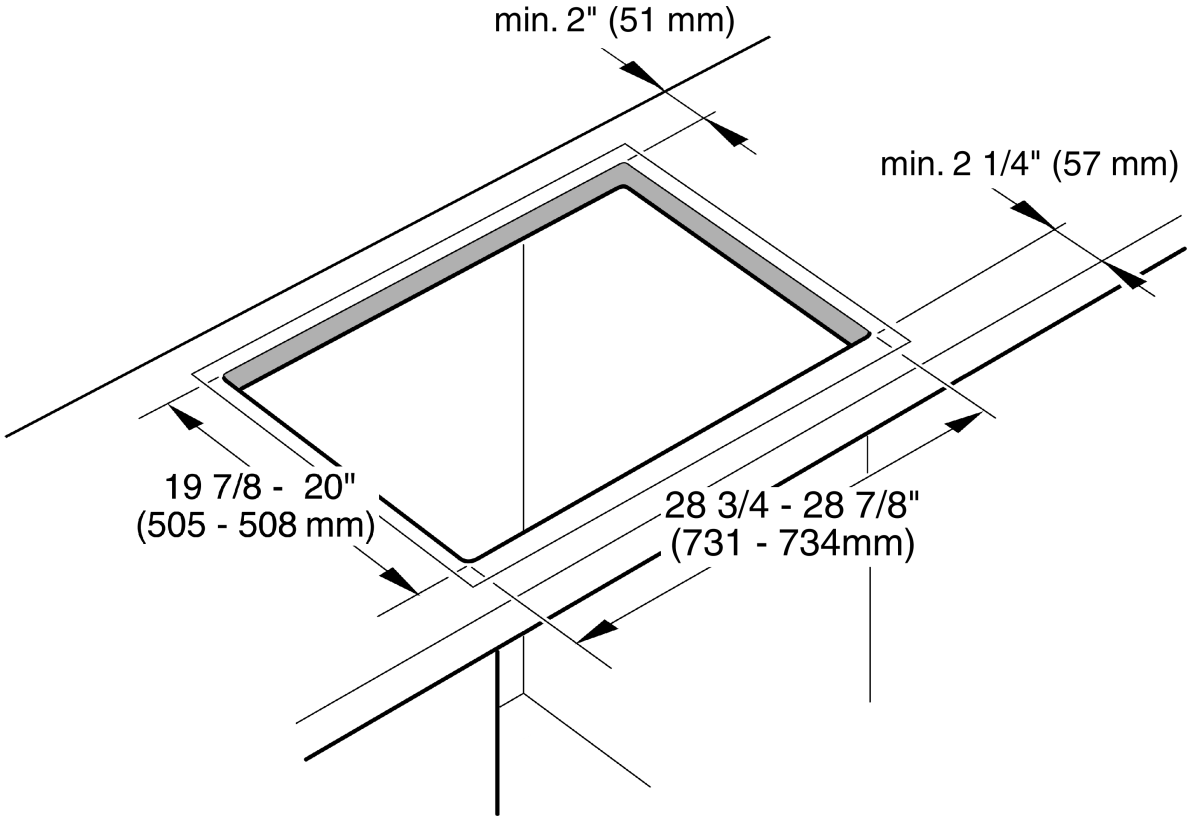

36” Models: CIT365...

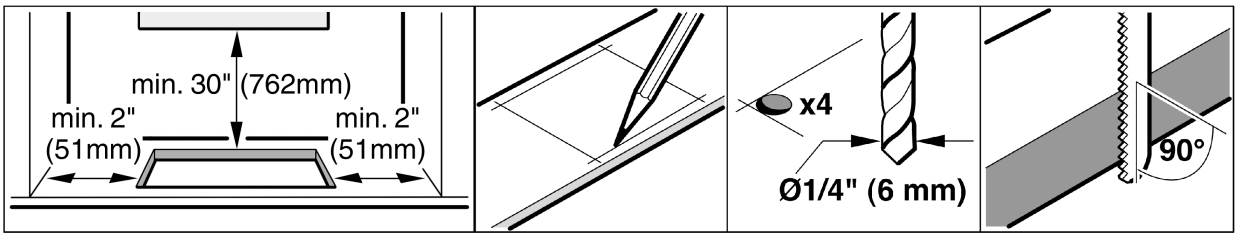

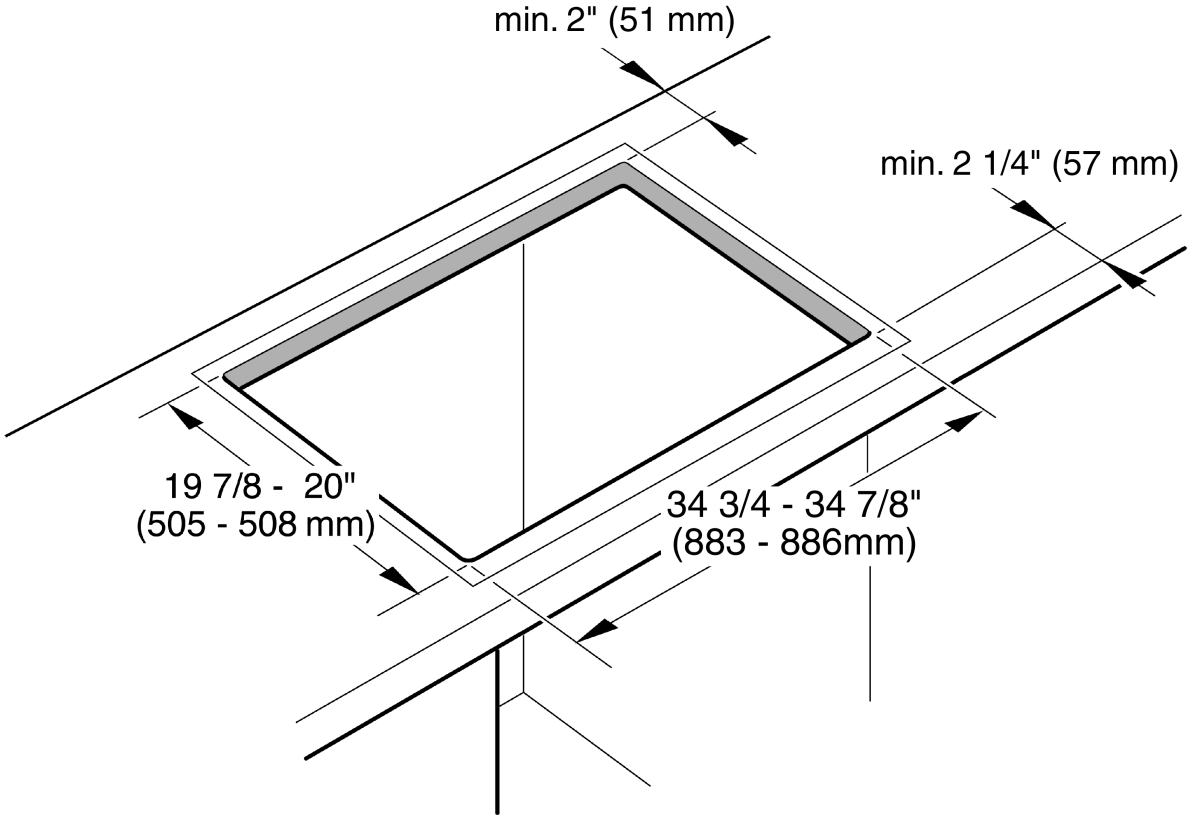

Cabinet requirements

The distance from the top of the cooktop to the bottom of the cabinets above it must be A = 30” (762 mm) minimum. This distance can be reduced to A = 24” (610 mm) when the bottom of the wood or metal cabinet is protected by not less than 1/4” (6.35 mm) flame retardant millboard, covered by no. 28 steel sheet 0.015” (0.4 mm) thick stainless steel, 0.024” (0.6 mm) aluminum, or 0.020” (0.5 mm) thick copper, at a minimum. Verify that the cabinets above the cooktop are a maximum of B=13” (330 mm) deep.

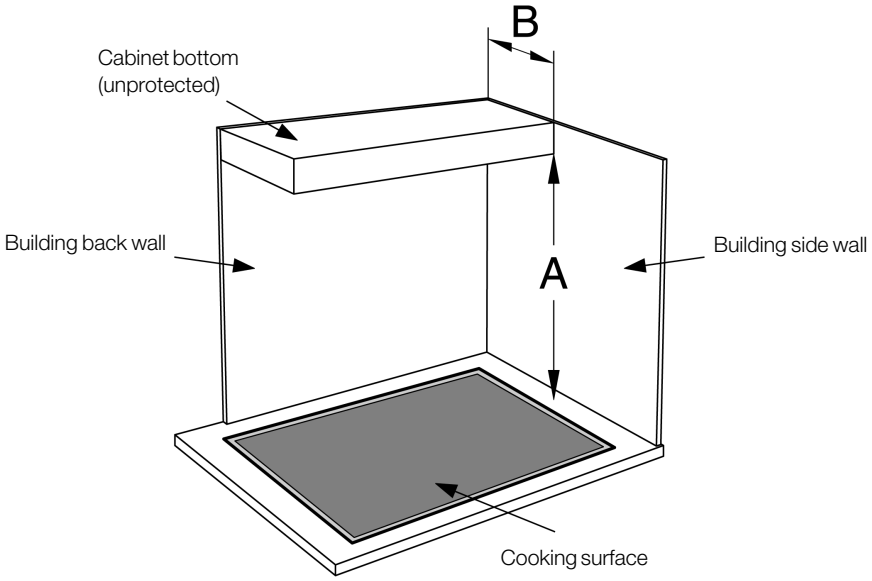

Installation procedure

WARNING: Use protective gloves when installing the plate.

Installing the heat shield

For safety reasons, the heat shield must be properly installed. This prevents components from overheating as a result of the recirculation of hot air from the cooktop.

The heat shield is the same width as the cooktop. For shipping, it is screwed to the burner box.

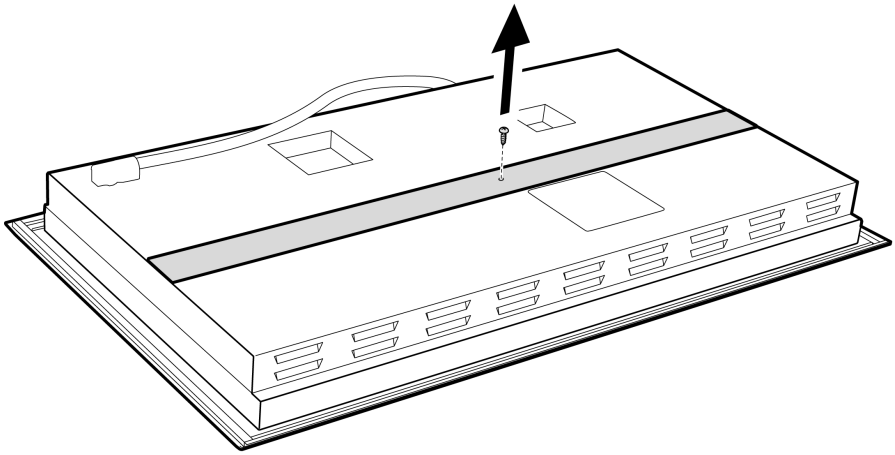

After unpacking the cooktop, unscrew the heat shield (see illustration).

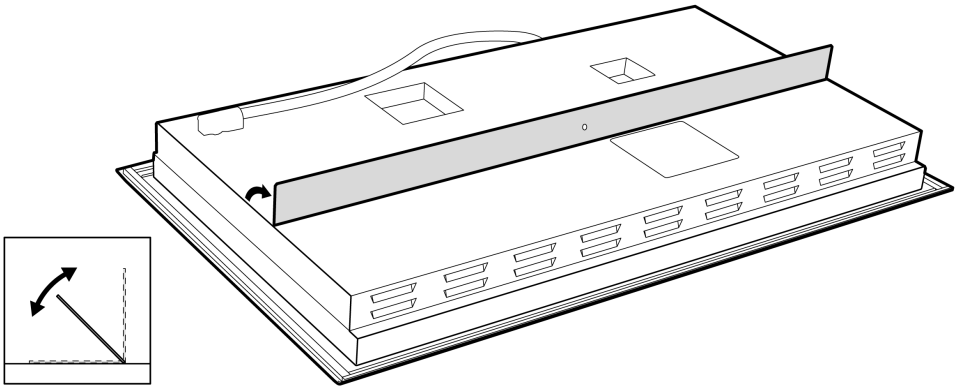

The heat shield will be able to rotate freely, as shown in the illustration.

Secure the cooktop to countertop

Not to let the glass to “drop” into place and that it needs to be supported along a broad area of the edges when “placing” the cooktop into the cutout.

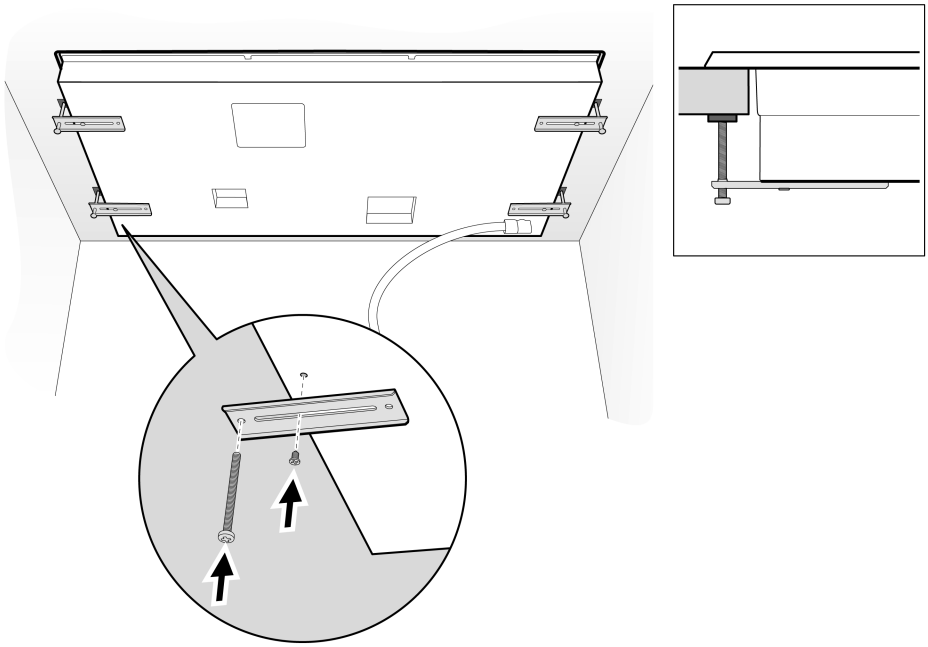

The cooktop should be secured to the countertop using the clamping brackets provided.

Before inserting the cooktop into the cutout, turn the cooktop upside down and attach brackets to the burner box using the screws.

Place cooktop into cutout.

Insert clamping screw into the bracket and secure cooktop to countertop.

Use a wood block to protect fragile countertop materials.

Electrical installation

Electrical requirements

You can find the identification plate with the electrical specifications on the underside of the appliance. The junction box must be located within 3 feet (~900 mm) of the cooktop connection. It should be easily accessible for service purposes.

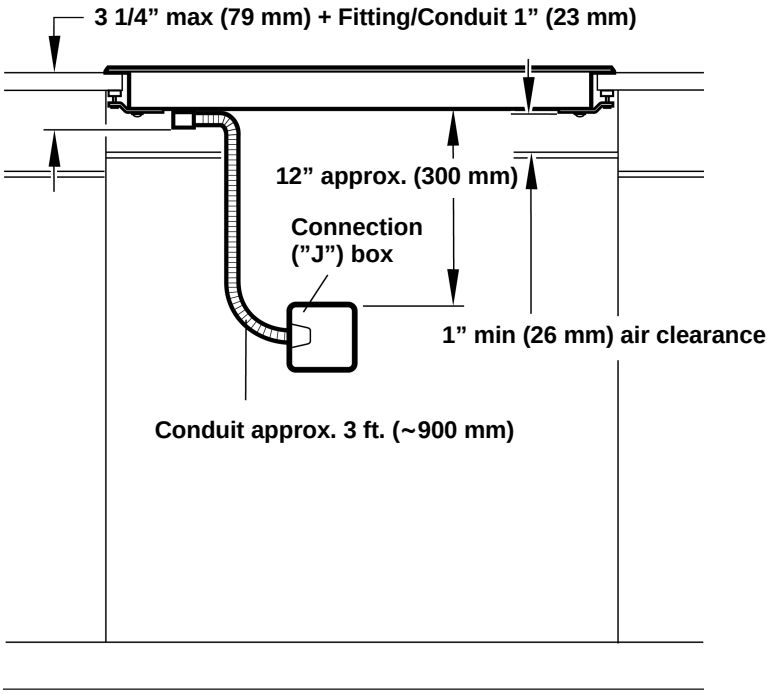

Power supply

CIT304 Models...

40 Amp circuit breaker

240 Volts, 3 Wire, 60 Hz

208 Volts, 3 Wire, 60 Hz

All with 39” (1m) flexible conduit (included)

CIT365 models...

50 Amp circuit breaker

240 Volts, 3 Wire, 60 Hz

208 Volts, 3 Wire, 60 Hz

All with 39” (1m) flexible conduit included

Electrical connection

CAUTION: Before installing, turn off at the service panel. Lock service panel to prevent power from being turned on accidentally.

The branch–circuit breaker ampacity, the wire sizes and the connections must meet the requirements of the National Electrical Code (or Canadian Electrical Code) and all local codes and ordinances.

Attach flexible conduit to the junction box.

WARNING: To reduce the risk of electric shock and fire, do not use a flexible power supply cord.

Connect the cooktop lead wires to the junction box supply wires in the following order:

black (L1) to black

red (L2) to red

green or bare to ground

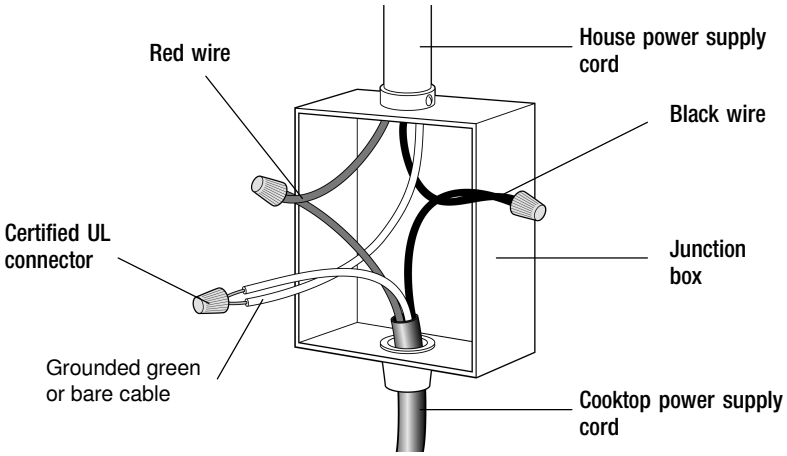

If the cooktop is installed and connected as specified above, it will be completely grounded in compliance with the National Electrical Code.

Test the installation

CAUTION: Before plugging in the electrical cord, be sure all controls are in the **OFF** position.

Remove everything from the cooktop surface, including stickers.

Clean cooktop surface with cooktop cleaning cream.

Turn on the power supply.

Verify that elements function properly.

Technical service

Contact our Technical Service Department if your appliance needs repair. Our central Customer Service Center (see below) will also be happy to supply you with details on a center close to you.

When you contact our customer service, have the product (E) number and the manufacturing (FD) number for your appliance available.
You can find the identification plate with these numbers on the underside of the appliance.

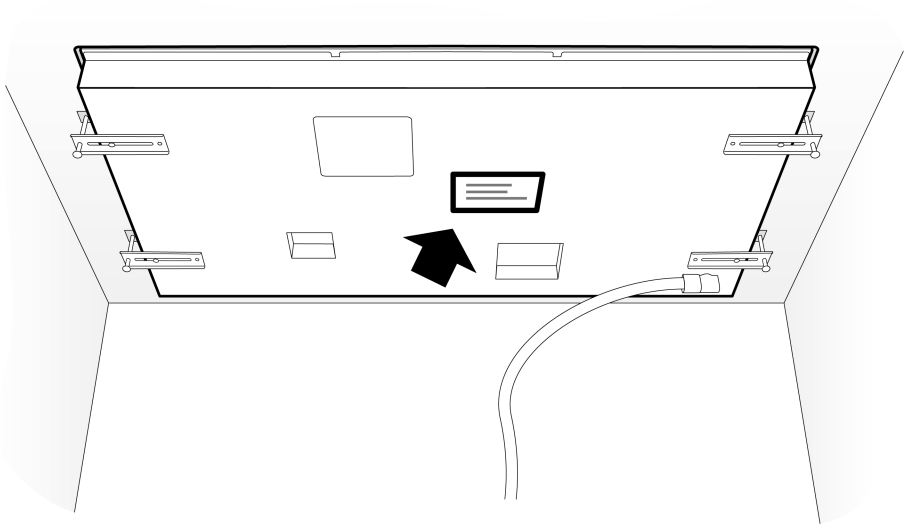

Questions? Please contact us. We look forward to hearing from you!

1–800–735–4328
www.thermador.com

1901 Main Street, Suite 600
Irvine, CA 92614

Table de matières

Instructions de sécurité importantes **15**
Avant de commencer **16**
Outils et pièces nécessaires 16
Pièces incluses 16
Préparation 17
Procédure d'installation **20**
Installation du déflecteur métallique 20
Fixer la plaque au plan de travail 21
Installation électrique 22
Tester l'installation 23
Service technique **24**

Instructions de sécurité importantes

LISEZ ET GARDEZ CES INSTRUCTIONS

Important

CONSERVER CES INSTRUCTIONS À L'INTENTION DE L'INSPECTEUR EN ÉLECTRICITÉ LOCAL.

CET APPAREIL DOIT ÊTRE INSTALLÉ PAR UN TECHNICIEN QUALIFIÉ

UN FOIS L'INSTALLATION TERMINÉE, GARDER CES INSTRUCTIONS AVEC L'APPAREIL MÉNAGER.

AVERTISSEMENT: Si les informations de ce manuel ne sont pas suivies scrupuleusement, un incendie ou une décharge électrique peuvent se produire et sont susceptibles de causer des dommagesmatériels ou des lésions corporelles.

AVERTISSEMENT: Ne réparer ni remplacer aucune pièce de l'appareil à moins que cela ne soitexpressément recommandé dans ce manuel. Ne jamais modifier ni altérer la configuration de l'appareil.
Toute installation, réparation oumaintenance inadéquate peut entraîner des blessures ou des dommages matériels. Consulter ce manuel pour obtenir des conseils sur la façon de procéder. Tous lestravaux d'entretien doivent être confiés à un technicien agréé.

Retirer le ruban adhésif et l'emballage avant d'utiliser l'appareil ménager. Détruire l'emballageaprès avoir déballé l'appareil. Ne jamais laisser les enfants jouer avec le matérielde conditionnement.

Sécurité de manipulation de l'appareil.

Les surfaces cachées peuvent comporter des rebords coupants. Faites attention enétendant le bras derrière l'appareil ou en dessous.

Sécurité électrique

Avant de procéder à l'installation, éteindre le disjoncteur du panneau de service. Verrouiller le disjoncteur pour éviter que le courant ne soit accidentellement rétabli.

Le disjoncteur doit avoir une séparation de contact de 3 mm. minimum pour tous les pôles.

S'assurer que l'appareil est adéquatement installé et mis à la terre par un technicienqualifié.

L'installateur doitindiquer au propriétaire l'emplacement du disjoncteur ou du fusible. Identifier sa position pour pouvoir le retrouver facilement.

Cet appareil est conforme à la norme de sécurité pour cuisinière électriques à usage domestique (Standard for Safety for Household Electric Ranges) 858 de ANSI/UL et à la norme nationale canadienne pour les cuisinières à usage domestique (National Standard of Canada for Household Cooking Ranges)
N.º E60335–1 et E60355–2–6 de CAN/CSA. Il incombe au propriétaire et à l'installateur de déterminer si des exigences et normes additionnelles s'appliquent pour des installations spécifiques.

Sécurité des appareils associés

Pour être utilisée avec sécurité, la cuisinière doit être installée par un spécialiste, conformément aux instructions d'installation. L'installateur est responsable de tout dommage qui résulterait d'une installation incorrecte.

Afin d'éviter tout risque de brûlures ou d'incendie au contact des unités chaudes en surface, ne pas laisser d'espace de stockage dans des armoires sur les unités de surface. En cas de stockage dans des armoires, il est possible de réduire le risque en installant une hotte se profilant horizontalement à 12, 7 cm minimum de la partie inférieure de l'armoire.

Ne pas installer de refrigérateur, lave–vaisselle ou four sans système de ventilation ou machine à laver pouvant se loger sous la plaque.

Remarque: Nous recommandons vivement l'installation d'un système de ventilation avec cet appareil ménager.

Avant de commencer

Outils et pièces nécessaires

- Tournevis à tête Phillips
- Crayon
- Perceuse avec broche de 6,35 mm
- Scie sauteuse
- Mètre ruban

Remarque: Il faudra éventuellement avoir recours à d'autres matériaux pour l'installation sur des surfaces de travail solides. Prendre contact avec le fabricant de la surface de travail.

Pièces incluses

- Supports de fixation (4)
- Vis de fixation, N.º 10 de 63,8 mm (4)
- Vis autotaraudeuses, N.º 8 de 9,5 mm (4)

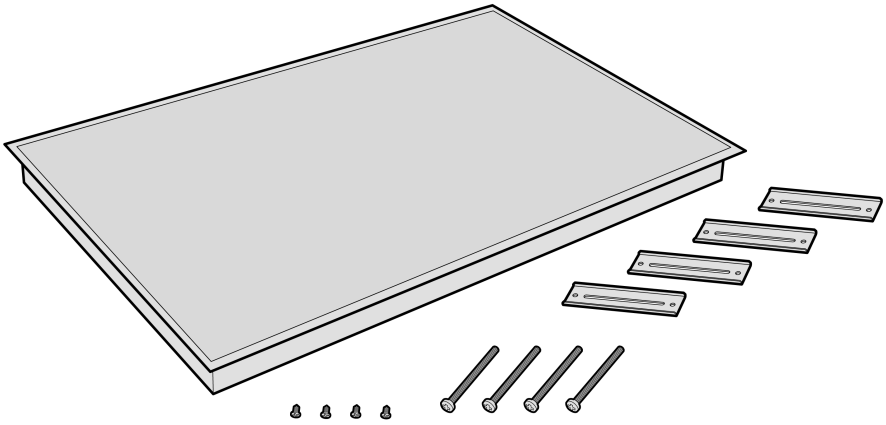

Préparation

Critères du plan de travail

AVERTISSEMENT: Pour réduire le risque d'incendie de matériaux combustibles environnants, installer le plan de travail à une distance d'au moins 51 mm. des deux parois latérales et de la paroi arrière.

Remarque

Le plan de travail doit être horizontal et plan. Veiller à la stabilité du plan de travail, même après avoir creusé le trou.

Après avoir préparé le trou, retirer les copeaux risquant d'affecter le fonctionnement des composants électriques.

Boucher les surfaces du trou pour qu'elles résistent à la chaleur. Cela empêche la dilatation des surfaces liée à l'humidité.

Les plans de travail solides requièrent fréquemment des installations spéciales. Par exemple, ces matériaux requièrent parfois l'utilisation de ruban réfléchissant la chaleur et de coins arrondis. Contacter le fabricant du plan de travail pour obtenir des instructions spécifiques à votre installation.

30" Modèles : CIT304...

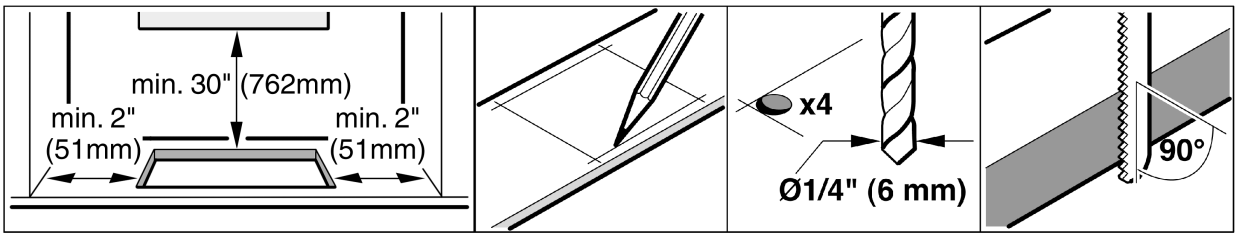

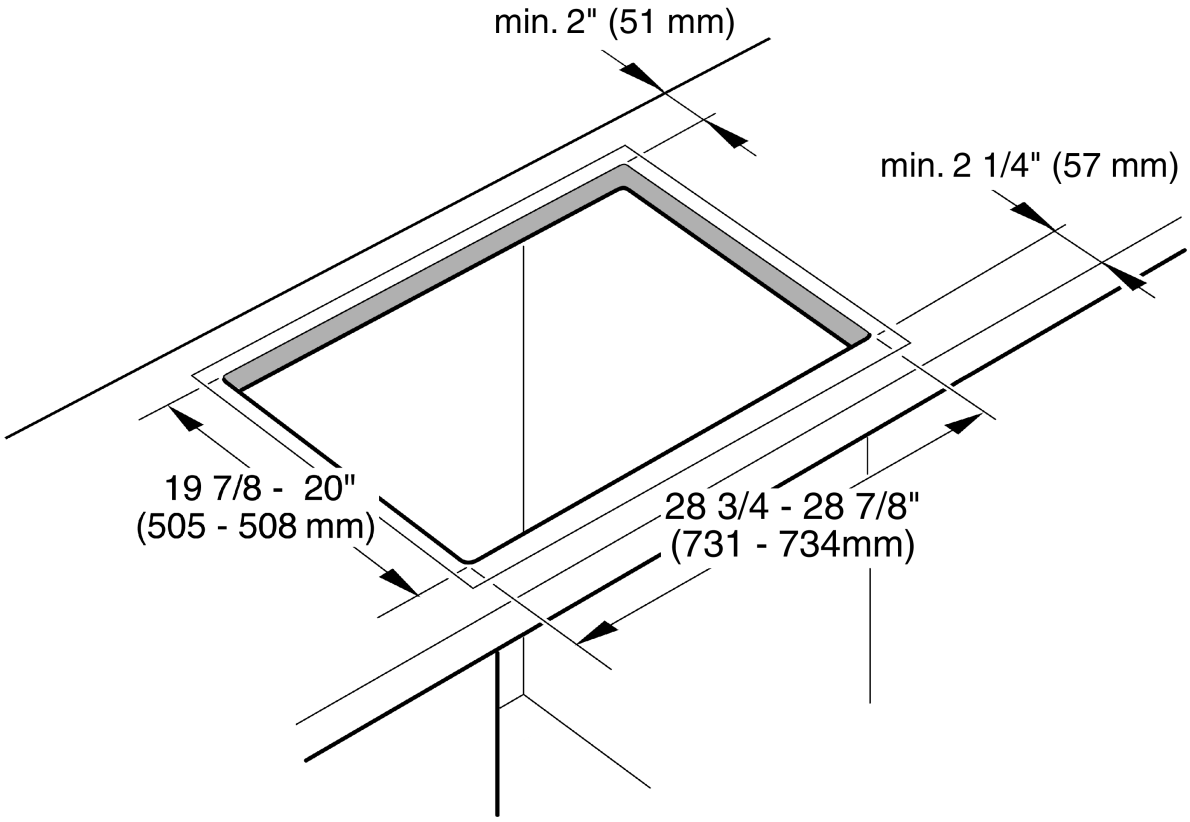

36” Modèles : CIT365...

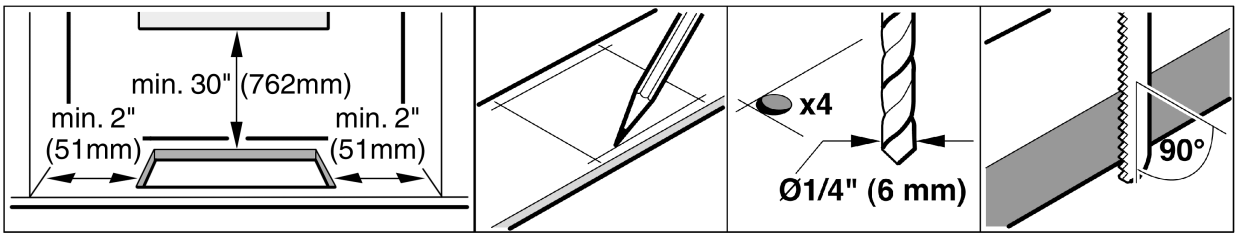

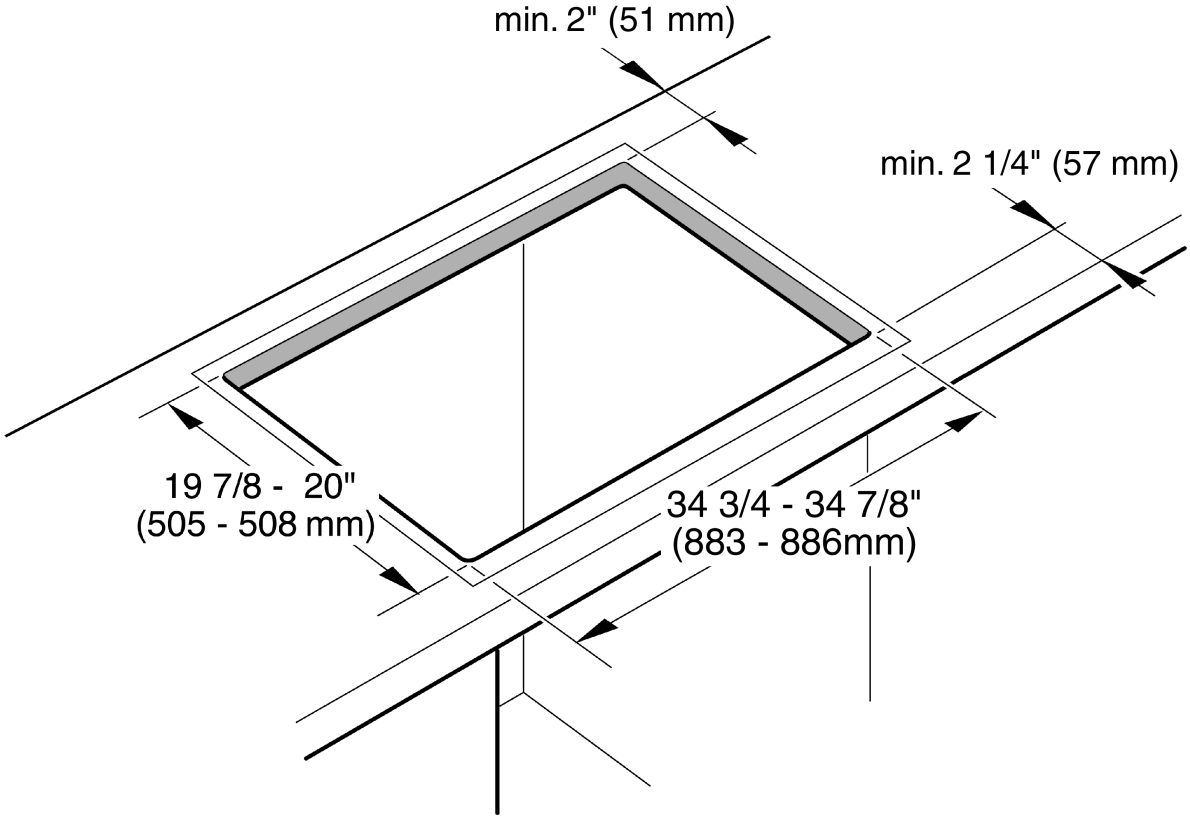

Critères des armoires

La distance de la partie supérieure de la plaque à la partie inférieure des cabinets situés au–dessus sera de A = 762 mm. au minimum. Cette distance peut être réduite à A = 610 mm., quand la partie inférieure de l'armoire en bois ou en métal est protégée par un carton résistant au feu d'une épaisseur dépassant 6,35 mm., recouvert d'une feuille en acier MSG N.° 28, en acier inoxydable de 0,4 mm. d'épaisseur, en aluminium de 0,6 mm. ou en cuivre de 0,5 mm. d'épaisseur au minimum. Vérifier si les armoires au–dessus de la grille ont un maximum de B=330 mm. en profondeur.

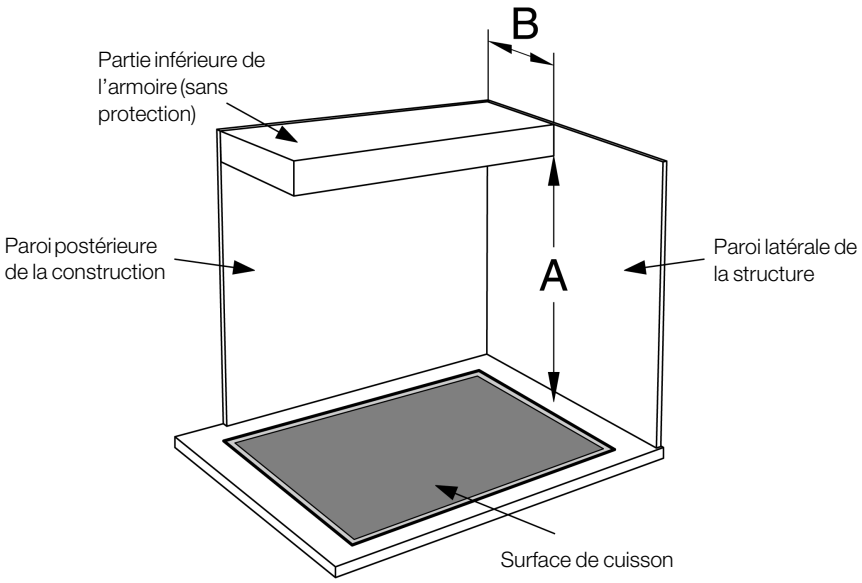

Procédure d’installation

AVERTISSEMENT: Utiliser des gants de protection pour procéder à l’installation de la plaque.

Installation du déflecteur métallique

Pour des raisons de sécurité, le déflecteur métallique doit être installé correctement. Ceci afin d’éviter la recirculation de l’air chaud en provenance de la plaque de cuisson ainsi que la surchauffe de ses composants.

Le déflecteur métallique est aussi large que la plaque de cuisson.. Pour le transport, le déflecteur est vissé à la tôle enveloppante.

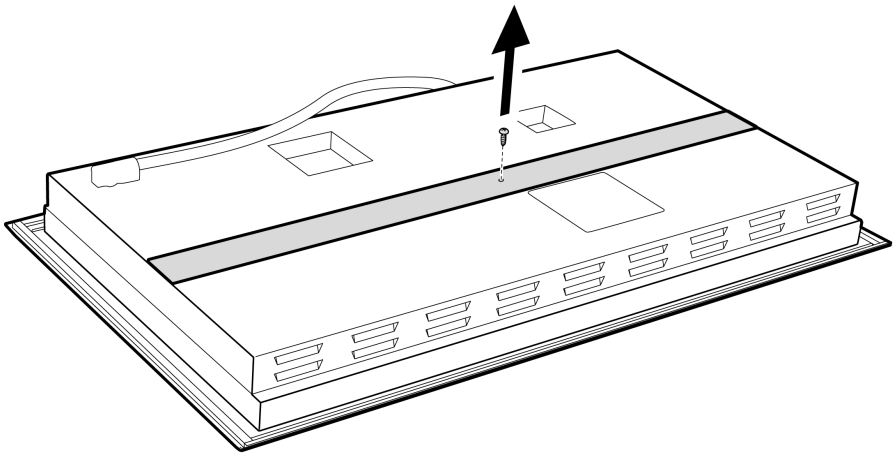

Après le déballage de la plaque de cuisson, dévisser le déflecteur métallique (voir image).

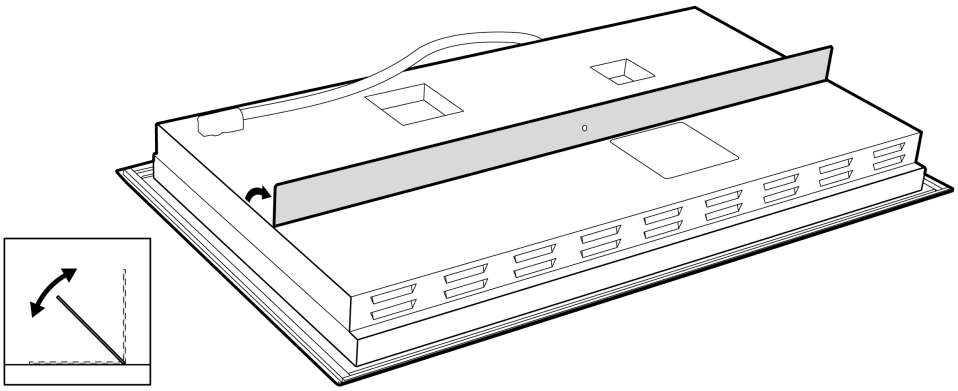

Le déflecteur métallique pourra tourner librement, comme le montre l’image.

Fixer la plaque au plan de travail

Ne laissez pas ”tomber” le verre de la plaque sur son emplacement, il doit être supporté sur tout son périmètre par une large surface des bords au moment de “placer” la table de cuisson sur la découpe.

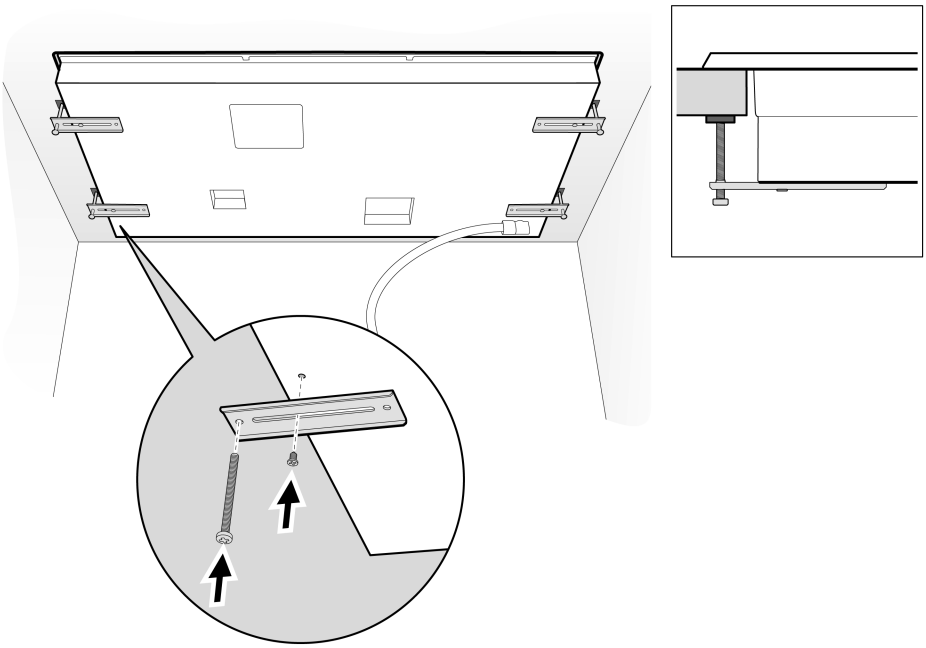

La plaque doit être fixée au plan de travail avec les supports de fixation fournis.

Avant d’introduire la plaque dans la cavité, retourner la plaque et fixer les supports à la tôle enveloppante à l’aide des vis.

Placer la plaque dans la cavité.

Introduire les vis de fixation dans le support et fixer la plaque au plan de travail.

Utiliser un bloc en bois pour protéger les matériaux fragiles du plan de travail.

Installation électrique

Critères électriques

Ces caractéristiques techniques figurent sur la plaque d'identification au bas de l'appareil ménager. Le boîtier de dérivation doit être placé à ~900 mm. max. du branchement de la plaque. On doit pouvoir y accéder facilement pour effectuer les réparations.

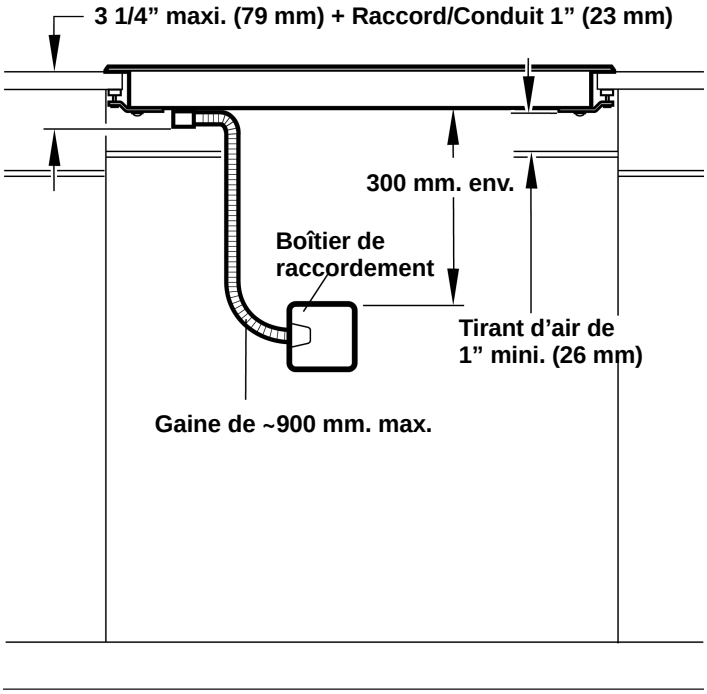

Alimentation électrique

Modèles CIT304...

Disjoncteur de 40 A

240 Volts, 3 Fils, 60 Hz

208 Volts, 3 Fils, 60 Hz

Tous avec conduit flexible de 1 m. inclus

Modèles CIT365...

Disjoncteur de 50 A

240 Volts, 3 Fils, 60 Hz

208 Volts, 3 Fils, 60 Hz

Tous avec conduit flexible de 1 m. inclus

Branchement électrique

ATTENTION: Avant l'installation, éteindre le disjoncteur du panneau de service. Attacher le disjoncteur pour empêcher qu'il allume accidentellement l'alimentation électrique.

La capacité maximum en ampères des disjoncteurs dérivés, la taille des câbles et les connexions doivent respecter les critères du Code électrique national (ou le Code électrique canadien) et tous les codes et règlements locaux.

Raccorder le câble flexible au boîtier de dérivation.

AVERTISSEMENT: pour réduire le risque d'électrocution et d'incendie, n'utilisez pas de câble d'alimentation électrique flexible.

Raccorder les câbles de connexion de la plaque aux câbles d'alimentation électrique du boîtier de dérivation dans la phase appropriée :

noir (L1) avec noir

rouge (L2) avec rouge

vert our dénudé avec la terre

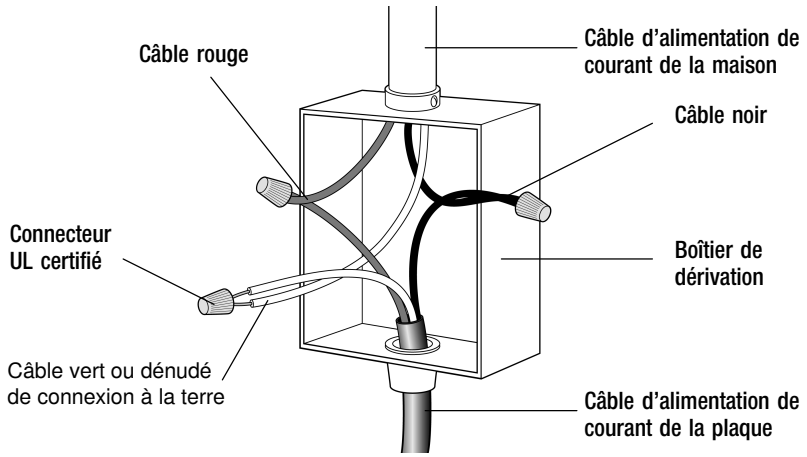

Si la plaque est installée et raccordée comme il a été spécifié précédemment, elle sera entièrement raccordée à la terre, conformément au Code national électrique.

Tester l'installation

ATTENTION: Avant d'activer la source d'alimentation électrique, veiller à ce que tous les contrôles soient en position **OFF** (éteint).

Retirer tous les objets de la surface de la plaque, dont les vignettes.

Nettoyer la surface de la plaque avec de la crème de nettoyage pour plaques.

Allumer le disjoncteur.

Vérifier si les éléments fonctionnent correctement.

Service technique

Si vous devez réparer l'appareil ménager, contactez notre département de service technique. Notre principal centre de service à la clientèle (voir la suite) sera ravi de vous référer à un centre près de votre domicile.

Lorsque vous appelez notre service à la clientèle, ayez à votre disposition le numéro de produit (E) et le numéro de fabrication (FD) de votre appareil ménager.
Ces numéros figurent sur la plaque d'identification au bas de l'appareil ménager.

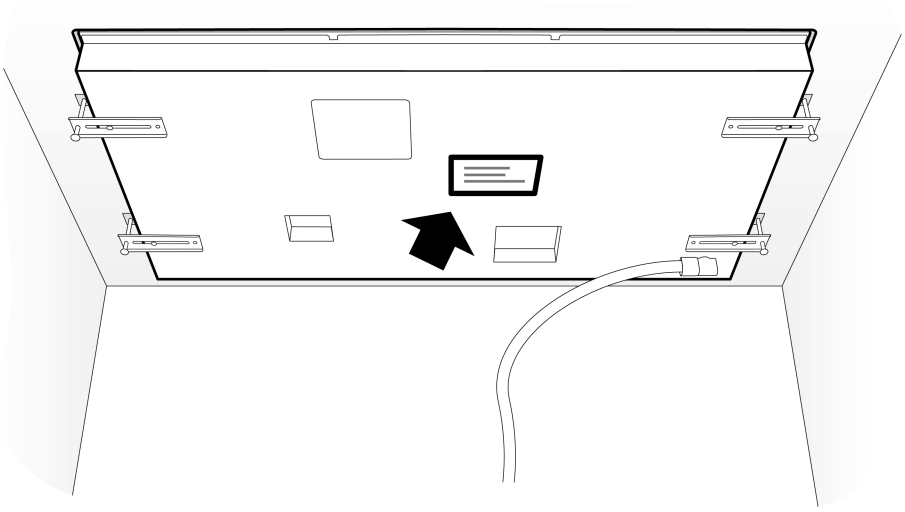

Des questions ? Contactez–nous. Nous espérons recevoir de vos nouvelles très bientôt !

1–800–735–4328
www.thermador.com

1901 Main Street, Suite 600
Irvine, CA 92614

Contenido

Instrucciones de seguridad importantes **26**
Antes de empezar **27**
Herramientas y piezas necesarias 27
Piezas incluidas 27
Preparación 28
Procedimiento de instalación **31**
Instalación del deflector metálico 31
Asegure la placa a la superficie de trabajo 32
Instalación eléctrica 33
Pruebe la instalación 34
Servicio técnico **35**

Instrucciones de seguridad importantes

LEA Y GUARDE ESTAS INSTRUCCIONES

Importante

CONSERVE ESTAS INSTRUCCIONES PARA USO DEL INSPECTOR DE ELECTRICIDAD LOCAL.

ESTE ELECTRODOMÉSTICO DEBE SER INSTALADO POR UN TÉCNICO CALIFICADO

DEJE ESTAS INSTRUCCIONES CON EL ELECTRODOMÉSTICO CUANDO HAYA FINALIZADO LA INSTALACIÓN.

AVISO: Si no sigue la información de este manual exactamente, se puede ocasionar un incendio o una descarga eléctrica que puede causar daños materiales o lesiones personales.

AVISO: No repare ni reemplace ninguna parte del electrodoméstico, a menos que esté específicamente recomendado en este manual. Nunca modifique ni altere la construcción del electrodoméstico. La instalación, servicio técnico o mantenimiento incorrectos pueden causar lesiones o daños materiales. Consulte este manual para su orientación. Remita todas las reparaciones a un centro de servicio técnico autorizado por la fábrica.

Retire toda la cinta y el embalaje antes de usar el electrodoméstico. Destruya el embalaje después de desembalar el electrodoméstico. Nunca deje que los niños jueguen con el material de embalaje.

Seguridad con el manejo del electrodoméstico

Las superficies ocultas pueden tener bordes filosos. Proceda con cuidado al intentar tomar el electrodoméstico por la parte trasera o desde abajo.

Seguridad con la electricidad

Antes de la instalación, apague el disyuntor de la caja de fusibles. Trabe el disyuntor para impedir que se encienda accidentalmente la alimentación eléctrica.

El disyuntor debe tener una separación de contacto de, al menos, 3 mm en todos los polos.

Asegúrese de que el electrodoméstico sea correctamente instalado y conectado a tierra por un técnico calificado.

El instalador debe mostrar al propietario la ubicación del disyuntor o el fusible. Márquela para recordarla más fácilmente.

Este electrodoméstico ha sido probado de acuerdo con la Norma de seguridad para estufas eléctricas de uso doméstico (Standard for Safety for Household Electric Ranges) 858 de ANSI/UL y la Norma nacional de Canadá para estufas de uso doméstico (National Standard of Canada for Household Cooking Ranges) N.º E60335–1 y E60355–2–6 de CAN/CSA. Es responsabilidad del propietario y el instalador determinar si se aplican otros requisitos y normas en instalaciones específicas.

Seguridad de los equipos relacionados

Se garantiza la seguridad de uso de la estufa solamente si es instalada por un especialista de acuerdo con estas instrucciones de instalación. El instalador es responsable de cualquier daño que se produzca debido a la instalación incorrecta.

Para eliminar el riesgo de quemaduras o incendio al tocar unidades de la superficie calentadas, se debe evitar dejar espacio de almacenamiento en gabinetes sobre las unidades de la superficie. En el caso de que haya almacenamiento en gabinetes, se puede reducir el riesgo instalando una campana que se proyecte horizontalmente 5 pulgadas (12.7 cm) como mínimo de la parte inferior del gabinete.

No instale refrigeradores, lavavajillas, hornos sin sistemas de ventilación ni lavadoras que puedan caber debajo de la placa.

Advertencia: Recomendamos categóricamente la instalación de un sistema de ventilación con este electrodoméstico.

Antes de empezar

Herramientas y piezas necesarias

- Destornillador con cabeza Phillips
- Lápiz
- Taladro con broca de 1/4” (6.35 mm)
- Sierra caladora
- Cinta métrica

Advertencia: Es posible que se necesiten otros materiales para la instalación en superficies de trabajo sólidas. Comuníquese con el fabricante de la superficie de trabajo.

Piezas incluidas

- Soportes de sujeción (4)
- Tornillos de sujeción, N.º 10 de 32 x 2 1/2” (63.8 mm) (4)
- Tornillos autorroscantes, N.º 8 de 3/8” (9.5 mm) (4)

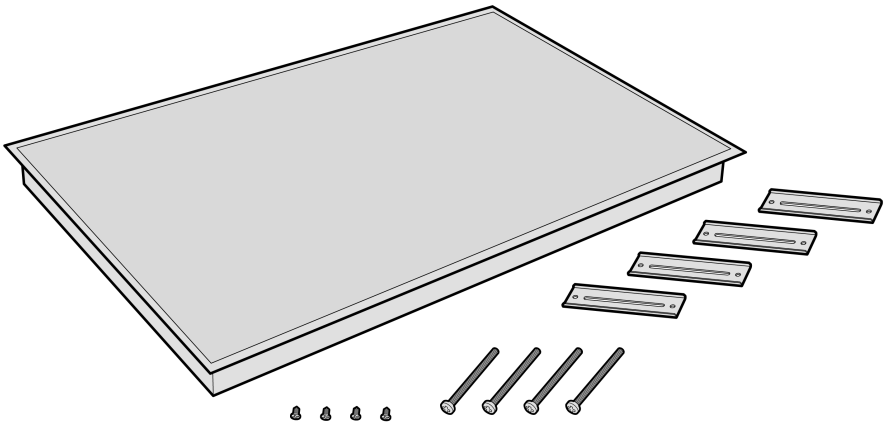

Preparación

Requisitos de la superficie de trabajo

AVISO: Para reducir el riesgo de ignición de materiales combustibles circundantes, instale la superficie de trabajo con una distancia de, al menos, 2” (51 mm) de ambas paredes laterales y de la pared posterior.

Nota

La superficie de trabajo debe ser horizontal y estar nivelada. La estabilidad de la superficie de trabajo debe estar garantizada incluso después de haber realizado el hueco.

Después de preparar el hueco, retire las virutas, ya que pueden afectar el funcionamiento de los componentes eléctricos.

Selle las superficies del hueco para que sean resistentes al calor. Esto impide que las superficies se dilaten como consecuencia de la humedad.

Las superficies de trabajo sólidas con frecuencia requieren instalaciones especiales. Por ejemplo, es posible que se necesiten cinta termorreflectante y esquineros redondeados. Para obtener las instrucciones específicas de su superficie de trabajo, comuníquese con el fabricante de la superficie de trabajo.

30” Modelos: CIT304...

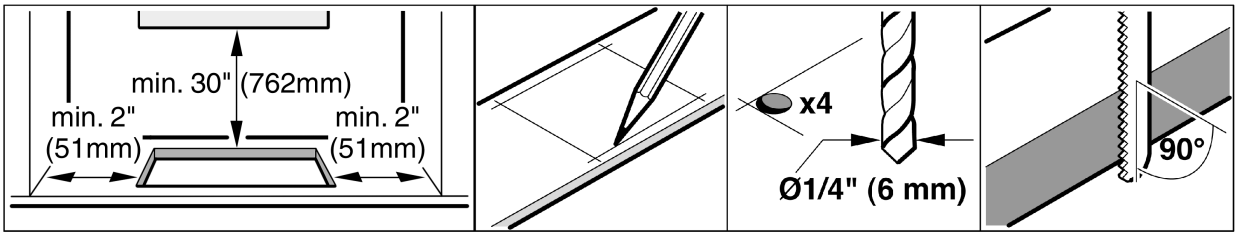

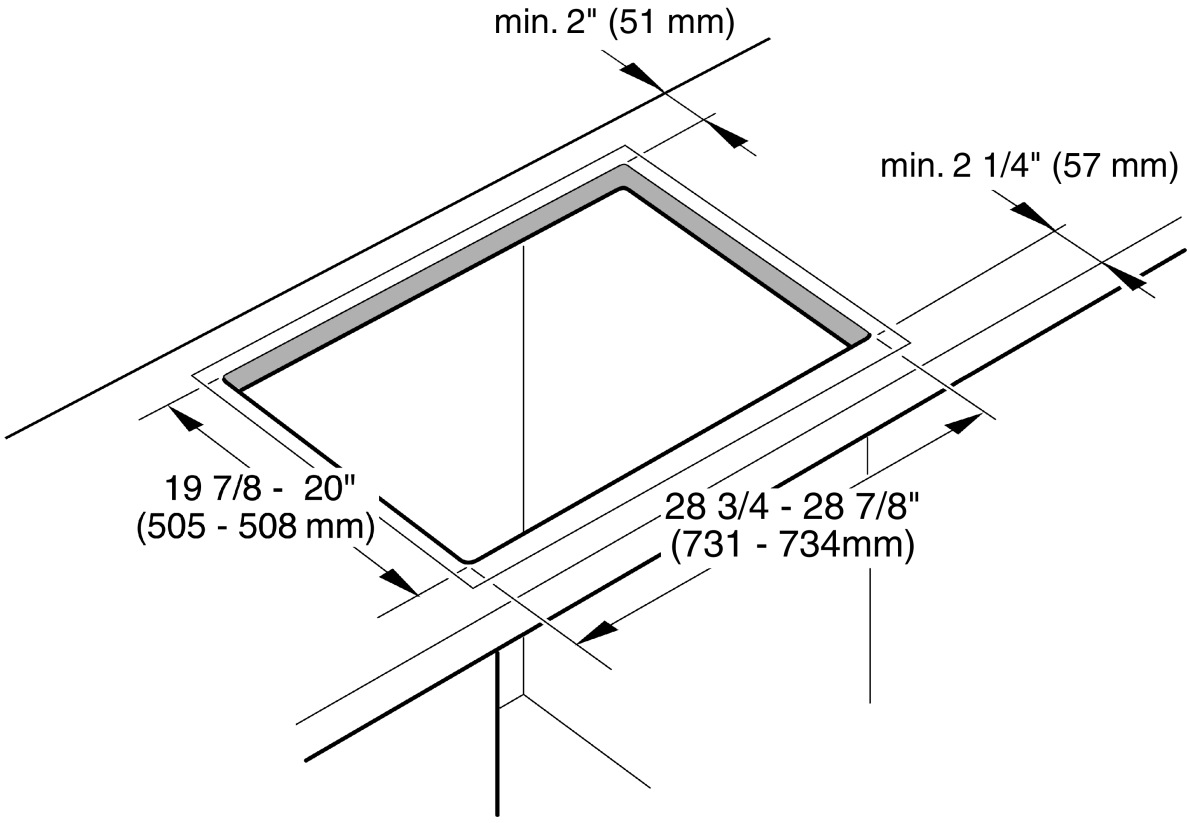

36” Modelos: CIT365...

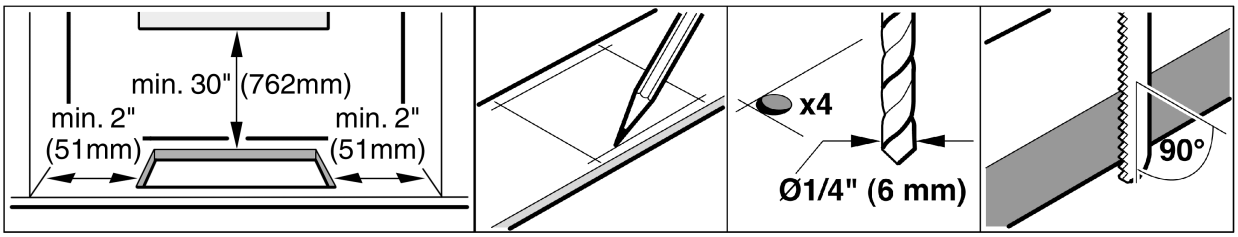

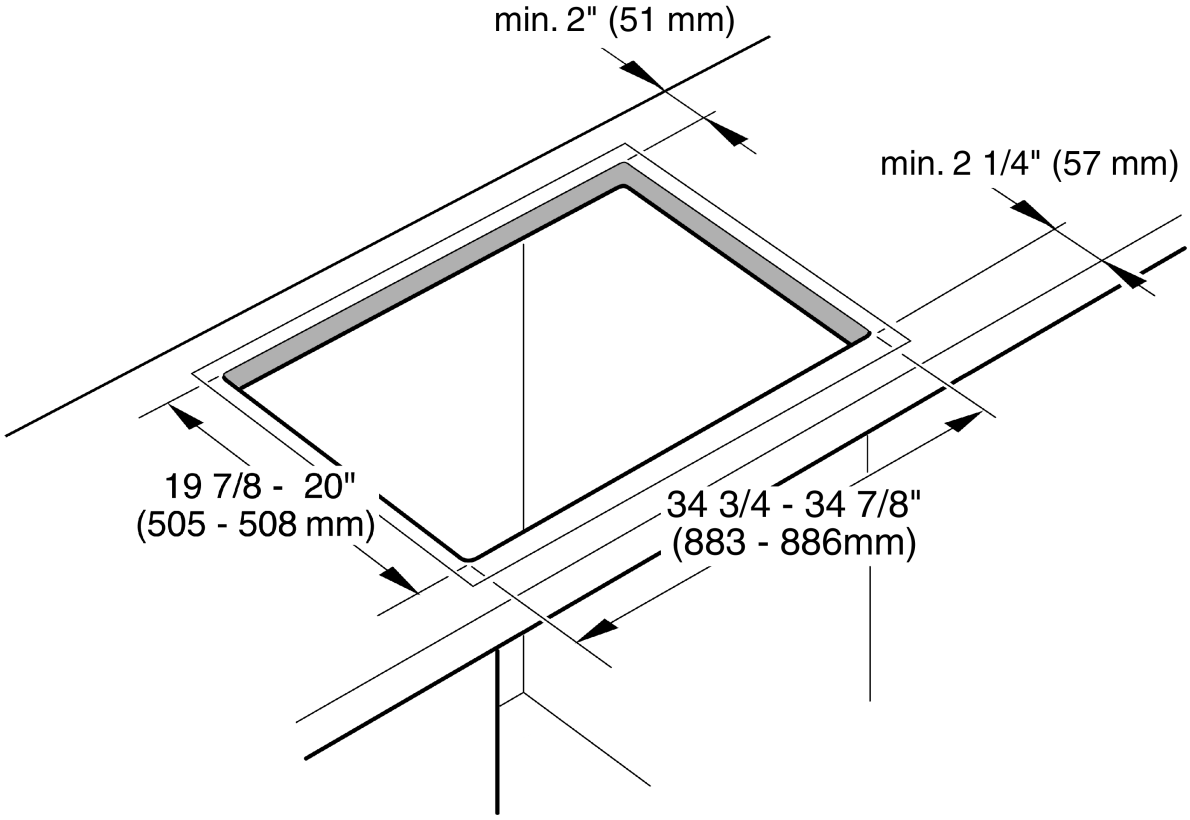

Requisitos de gabinetes

La distancia desde la parte superior de la placa hasta la parte inferior de los gabinetes que se encuentran arriba deberá ser A = 30” (762 mm) como mínimo. Esta distancia se puede reducir a A = 24” (610 mm), cuando la parte inferior del gabinete de madera o metal está protegida por un cartón resistente al fuego de un grosor no inferior a 1/4” (6.35 mm), cubierto por una lámina de acero MSG N.° 28, acero inoxidable de 0.015” (0.4 mm) de grosor, aluminio de 0.024” (0.6 mm) o cobre de 0.020” (0.5 mm) de grosor, como mínimo. Compruebe que los gabinetes encima de la parrilla tengan un máximo de B=13” (330 mm) de fondo.

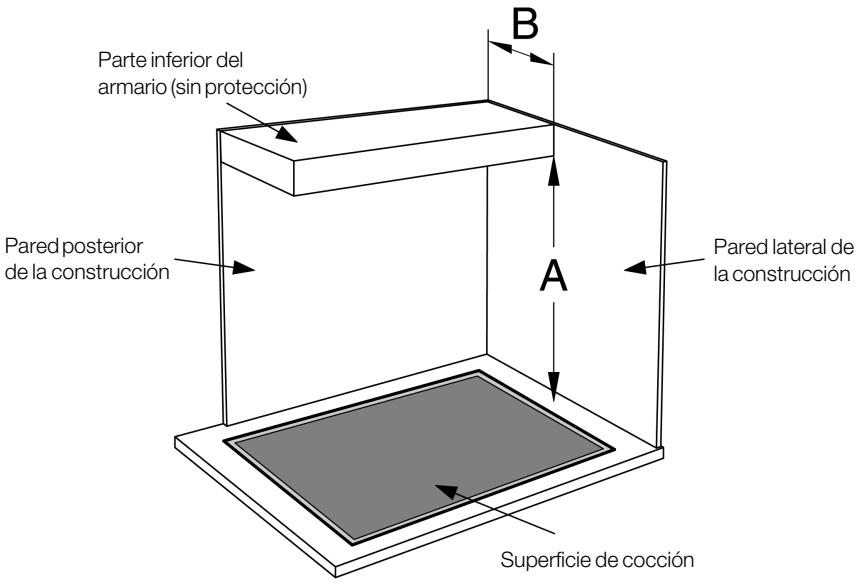

Procedimiento de instalación

AVISO: Use guantes de protección al instalar la placa.

Instalación del deflector metálico

Por razones de seguridad, el deflector metálico debe instalarse correctamente. De esta forma, se impide la recirculación de aire caliente procedente de la placa de cocción, y se evita el sobrecalentamiento de sus componentes.

El deflector metálico tiene la misma anchura que la placa de cocción. Para su transporte, el deflector se encuentra atornillado a la chapa envolvente.

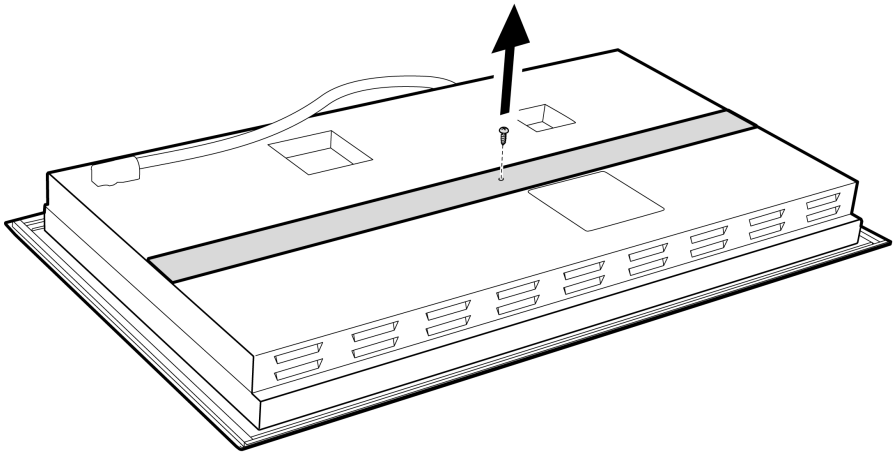

Tras desembalar la placa, desatornillar el deflector metálico (ver imagen).

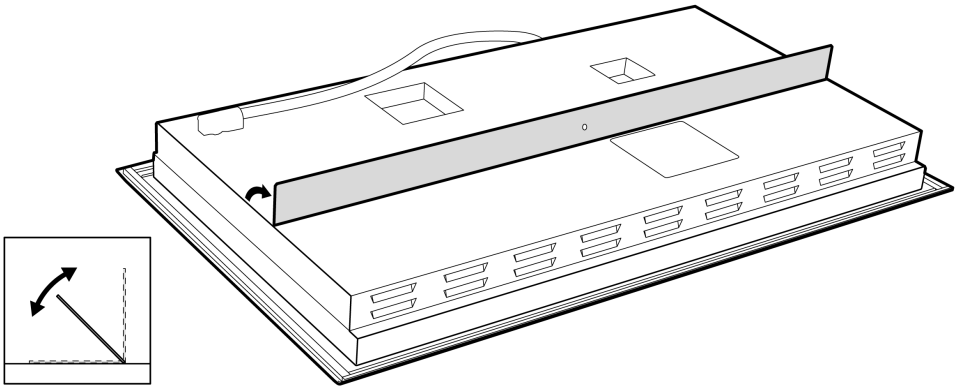

El deflector metálico podrá girar libremente, tal y como se muestra en la imagen.

Asegure la placa a la superficie de trabajo

No ”dejar caer” el vidrio de la placa en su ubicación, debe sujetarse en todo su perímetro por una superficie amplia de los bordes en el momento de ”instalar” la placa de cocción en su hueco.

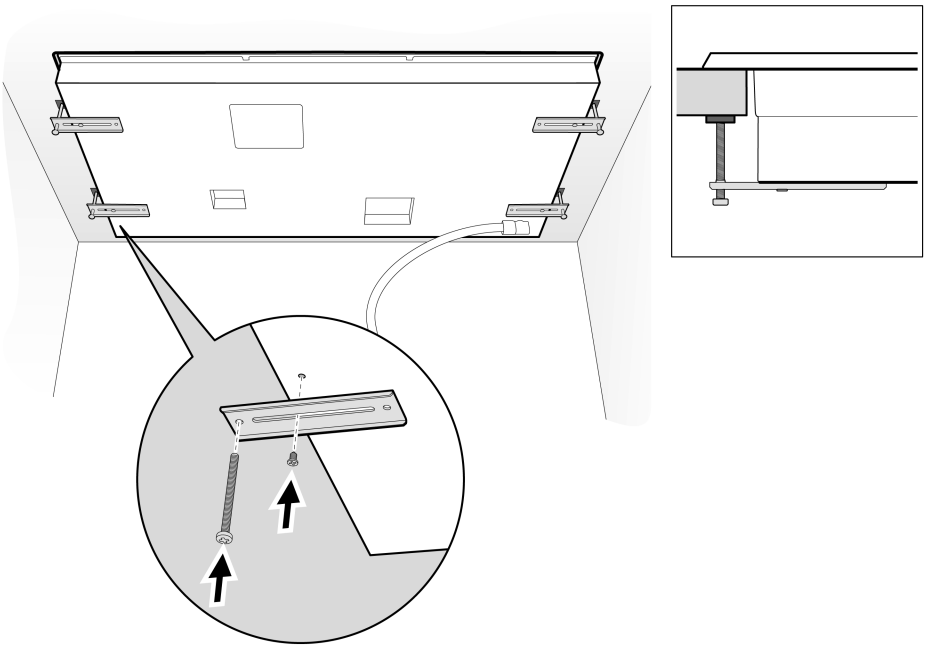

La placa debe asegurarse a la superficie de trabajo con los soportes de sujeción provistos.

Antes de introducir la placa en el hueco, dé vuelta a la placa y fije los soportes a la chapa envolvente con los tornillos.

Coloque la placa en el hueco.

Introduzca los tornillos de sujeción en el soporte y asegure la placa a la superficie de trabajo.

Utilice un bloque de madera para proteger los materiales frágiles de la superficie de trabajo.

Instalación eléctrica

Requisitos eléctricos

Puede encontrar la placa de identificación con las especificaciones eléctricas en la parte inferior del electrodoméstico. La caja de conexiones debe estar ubicada dentro de los 3 pies (~900 mm) de la conexión de la placa. Se debe poder obtener acceso a ella fácilmente para realizar las reparaciones.

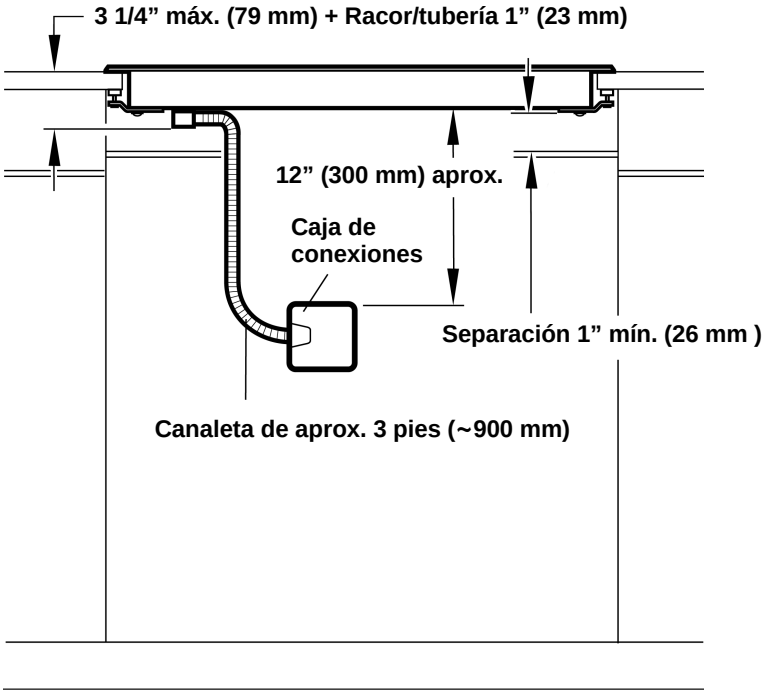

Alimentación eléctrica

Modelos CIT304...

Disyuntor de 40 Amp

240 Voltios, 3 Hilos, 60 Hz

208 Voltios, 3 Hilos, 60 Hz

Todos con conducto flexible de 39” (1m) incluido

Modelos CIT365...

Disyuntor de 50 Amp

240 Voltios, 3 Hilos, 60 Hz

208 Voltios, 3 Hilos, 60 Hz

Todos con conducto flexible de 39” (1m) incluido

Conexión eléctrica

ATTENCION: Antes de la instalación, apague el disyuntor de la caja de fusibles. Trabe el disyuntor para impedir que se encienda accidentalmente la alimentación eléctrica.

La capacidad máxima en amperios de los disyuntores de los circuitos derivados, el tamaño de los cables y las conexiones deben cumplir con los requisitos del Código Eléctrico Nacional (o el Código Eléctrico Canadiense) y todos los códigos y ordenanzas locales.

Conecte el conducto flexible a la caja de conexiones.

AVISO: Para reducir el riesgo de descarga eléctrica e incendio, no use un cable de alimentación eléctrica flexible.

Conecte los cables conectores de la placa a los cables de alimentación eléctrica de la caja de conexiones en la fase correcta:

negro (L1) con negro

rojo (L2) con rojo

verde o desnudo a masa

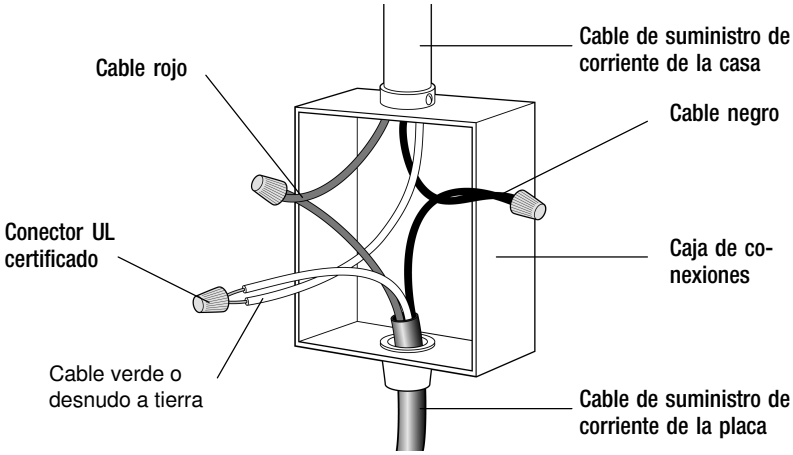

Si la placa se instala y conecta como se especificó anteriormente, estará totalmente conectada a tierra conforme al Código Nacional Eléctrico.

Pruebe la instalación

ATTENCION: Antes de activar la fuente de alimentación eléctrica, asegúrese de que todos los controles estén en la posición **OFF** (Apagado).

Retire todos los objetos de la superficie de la placa, incluidas las calcomanías.

Limpie la superficie de la placa con crema de limpieza para placas.

Encienda el disyuntor.

Verifique que los elementos funcionen correctamente.

Servicio técnico

Si necesita reparar el electrodoméstico, llame a nuestro departamento de Servicio Técnico. Nuestro Centro de Servicio al Cliente principal (ver a continuación) también se complacerá en brindarle la información sobre un centro cercano a su domicilio.

Cuando llame a nuestro servicio al cliente, tenga a la mano el número de producto (E) y el número de fabricación (FD) de su electrodoméstico.
Puede encontrar la placa de identificación con estos números en la parte inferior del electrodoméstico.

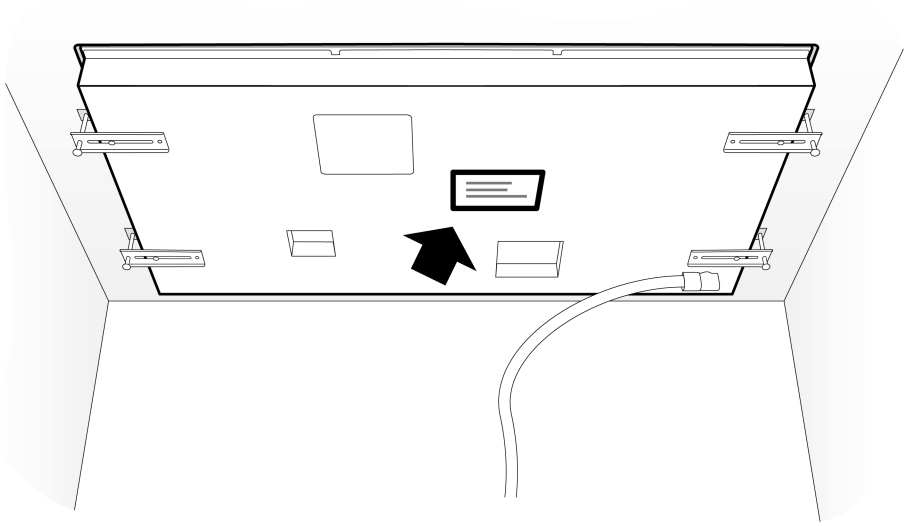

¿Preguntas? Comuníquese con nosotros. ¡Esperamos tener noticias suyas pronto!

1–800–735–4328
www.thermador.com
1901 Main Street, Suite 600
Irvine, CA 92614

THERMADOR® Support/Réparation/Servicio técnico

Service

We realize that you have made a considerable investment in your kitchen. We are dedicated to supporting you and your appliance so that you have many years of creative cooking.

Please don't hesitate to contact our STAR® Customer Support Department if you have any questions or in the unlikely event that your THERMADOR® appliance needs service. Our service team is ready to assist you.

Parts & Accessories

Parts, filters, descalers, stainless steel cleaners and more can be purchased in the THERMADOR® eShop or by phone.

USA

Service
800-735-4328
www.thermador.com/support

Parts & Accessories
www.thermador-eshop.com

Canada

Service
800-735-4328
www.thermador.ca

Parts & Accessories
Marcone - 800-482-6022
or
Reliable Parts - 800-663-6060

Réparation

Nous comprenons que vous avez fait un investissement important pour votre cuisine. C'est pourquoi nous nous engageons à offrir un service de qualité à vous comme à votre appareil afin de vous garantir des années de créativité dans votre cuisine.

N'hésitez pas à contacter notre département du service à la clientèle STAR[MD] si vous avez des questions ou dans le cas peu probable que votre appareil THERMADOR[MD] nécessite une réparation. Notre équipe de réparation est prête à vous aider.

Pièces et accessoires

Plusieurs pièces, filtres, détartrants et nettoyants pour l'acier inoxydable sont offerts dans la boutique électronique eShop de THERMADOR[MD] ou par téléphone.

États-Uni

Réparation
800-735-4328
www.thermador.com/support

Pièces et accessoires
www.thermador-eshop.com

Canada

Réparation
800-735-4328
www.thermador.ca

Pièces et accessoires
Marcone - 800-482-6022
ou
Reliable Parts - 800-663-6060

Servicio técnico

Sabemos que usted ha realizado una inversión considerable en su cocina. Nos dedicamos a brindar asistencia técnica para usted y su electrodomésticode manera que tenga muchos años de cocina creativa.

No dude en comunicarse con nuestro Departamento de Atención al Cliente de STAR® si tiene alguna pregunta o en el caso poco probable de que su electrodoméstico THERMADOR® necesite servicio técnico. Nuestro equipo de servicio técnico está listo para asistirlo.

Piezas y accesorios

Puede comprar piezas, filtros, productos para eliminar el sarro, limpiadores para acero inoxidable y más artículos en la tienda electrónica de THERMADOR® o por teléfono.

EE. UU.

Servicio técnico
800-735-4328
www.thermador.com/support

Piezas y accesorios
www.thermador-eshop.com

Canada

Servicio técnico
800-735-4328
www.thermador.ca

Piezas y accesorios
Marcone - 800-482-6022
o
Reliable Parts - 800-663-6060

Thermador®
REAL INNOVATIONS FOR REAL COOKS

9000841892
10/12

1901 Main Street, Suite 600 • Irvine, CA 92614 • 1-800-735-4328
www.thermador.com • © 2012 BSH Home Appliances

CIT304KBB
30-INCH INDUCTION COOKTOP
MASTERPIECE® SERIES BLACK FRAMELESS

Thermador
REAL INNOVATIONS FOR REAL COOKS®

Also Available:
CIT304KB - Black with Stainless Steel Frame
CIT304KM - Silver Mirrored Finish

FEATURES & BENEFITS

- ★ - Our Induction PowerBoost® feature heats cookware faster than any other type of cooking technology
- Large and powerful 11" element with 3,600 W
- Speed heating induction cooktops heat faster than traditional gas and electric cooktops
- Auto Shut-Off Timer available for all elements enables user to set desired cooking times. Separate kitchen timer also available.
- Touch control panel with blue light illumination offers 17 power settings

ACCESSORIES (OPTIONAL)

CHEFSPAN08
10" Stainless Steel Pan

GENERAL PROPERTIES	
Controls	Touch Controls
ELEMENT PERFORMANCE	
Power of Front Left Heating Element	2,200 W
Power of Front Left Heating Element (In Boost)	3,700 W
Power of Back Left Heating Element	1,400 W
Power of Back Left Heating Element (In Boost)	1,800 W
Power of Center Heating Element	N/A
Power of Center Heating Element (In Boost)	N/A
Power of Back Right Heating Element	2,400 W
Power of Back Right Heating Element (In Boost)	3,600 W
Power of Front Right Heating Element	1,400 W
Power of Front Right Heating Element (In Boost)	1,800 W
Burners With Booster	All 4
ELEMENT SIZE	
Dimension of Front Left Heating Element	9"
Dimension of Back Left Heating Element	6"
Dimension of Center Heating Element	N/A
Dimension of Back Right Heating Element	11"
Dimension of Front Right Heating Element	6"
TECHNICAL DETAILS	
Watts (W)	7,200 W
Circuit Breaker (A)	40 A
Volts (V)	208 / 240 V
Frequency (Hz)	50 / 60 Hz
Plug Type	No Plug
Conduit	39" Flexible 3-Wire
Energy Source	Electric
DIMENSIONS & WEIGHT	
Overall Appliance Dimensions (HxWxD) (in)	3/8"+3 7/8" x 31" x 21 1/4"
Required Cutout Size (HxWxD) (in)	3 7/8" x 28 3/4" x 19 7/8"
Minimum Distance From Counter Front (in)	2 1/2"
Minimum Distance From Rear Wall (in)	2 3/8"
Net Weight (lbs)	42 lbs
WARRANTY	
Limited Warranty, Entire Appliance, Parts and Labor	2 Year
Limited warranty for glass ceramic surface / electronic elements and switches; parts	3rd to 5th Year

CIT304KBB
30-INCH INDUCTION COOKTOP
MASTERPIECE® SERIES BLACK FRAMELESS

Thermador
REAL INNOVATIONS FOR REAL COOKS®

30-INCH COOKTOP AND CUTOUT DIMENSIONS

IMPORTANT: Thermador 30" Induction Cooktops are not approved to be installed above wall ovens.

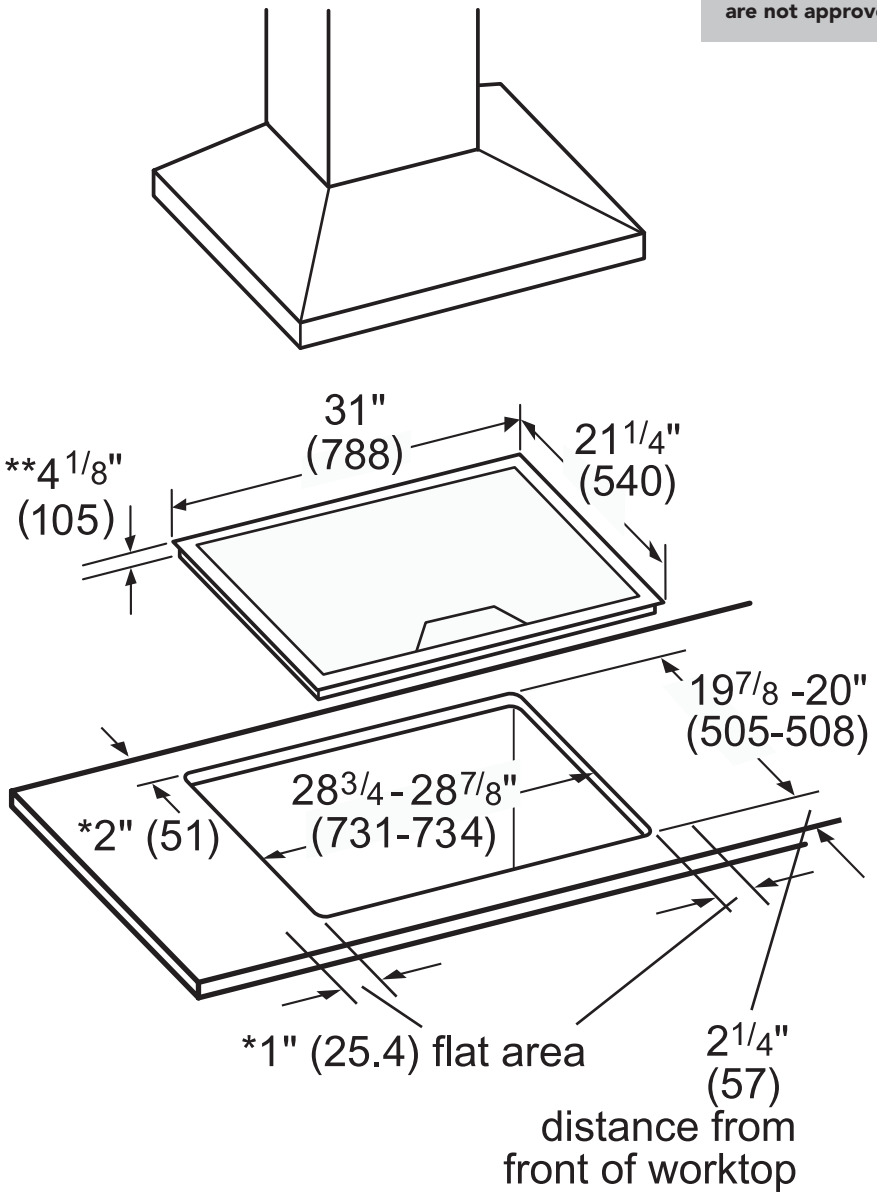

* Minimum distance from cutout to the wall
** Recessed depth (includes 1" air clearance)

Measurements in inches (mm in brackets)

NOTE: The work surface should be horizontal and level. The stability of the countertop should be confirmed even after making the cutout.

These warranties give you specific legal rights and you may have other rights that vary from state to state. Full warranty and limited warranty from date of installation. For complete warranty details, refer to your Use & Care manual, or ask your dealer.

Specifications are for planning purposes only. Refer to installation instructions and consult your countertop supplier prior to making counter opening. Consult with a heating and ventilation engineer for your specific ventilation requirements. For the most detailed information, refer to installation instructions accompanying product or write to Thermador indicating the model number. Specifications are correct at time of printing. Thermador reserves the right to change product specifications or design without notice. Some models are certified for use in Canada. Thermador is not responsible for products that are transported from the U.S. for use in Canada.

1 800 735 4328 | USA THERMADOR.COM | CANADA THERMADOR.CA | ©2015 BSH HOME APPLIANCES CORPORATION. ALL RIGHTS RESERVED.

SUMMIT

Felix Storch, Inc.
SUMMIT Appliance
770 Garrison Avenue
Bronx, NY 10474

USE AND CARE GUIDE

Induction Cooktop, Model SINC2B120

⚠ WARNING ⚠

TO REDUCE THE RISK OF FIRE OR ELECTRIC SHOCK,
DO NOT REMOVE TOP OR BOTTOM COVER.
NO USER-SERVICEABLE PARTS INSIDE.
INSTALLATION, REPAIR, AND REMOVAL SHOULD BE DONE BY
AUTHORIZED SERVICE PERSONNEL ONLY.

Before installation, record the model and serial number as found on the back of your cooktop. If you require service or call with a question, please have this information ready.

Model: _____

Serial Number: _____

Purchase Date: _____

C ETL CM LISTED US

FC

Contents

Your SUMMIT Induction Cooktop 1
About Induction Cooking 1
Important Safety Instructions ..... 2 - 4
Installation .....5 - 7
Electrical Connection 8
How to Use Your Cooktop .....9 - 12
Notes on Using Your Cooktop 12
Compatible Cookware 13
Cleaning Your Cooktop 14
Troubleshooting Guide ..... 15 - 16
Warranty Information 17

Your SUMMIT Induction Cooktop

Thank you for purchasing one of SUMMIT's induction cooktops. This product is intended to provide you with many years of quality service. Please read this manual in its entirety to maximize the lifespan and performance of your appliance.

About Induction Cooking

When you turn on the power of your induction cooktop, coils inside produce a magnetic field underneath the glass ceramic surface. When the proper cookware is placed on top of a magnetized cooking zone, the magnetic field sends currents into the cookware, causing friction and generating instant heat inside your pot or pan.

We hope you enjoy the speed, efficiency, and safety of this appliance.

IMPORTANT SAFETY INSTRUCTIONS

Keep these instructions handy for future use. If lost, this manual is available from our website at www.summitappliance.com

Read all instructions carefully before installation and operation of the appliance. Failure to follow these warnings could result in a fire or explosion that causes property damage, personal injury or death. To reduce the risk of fire, electric shock or injury, take the following precautions:

Intended Use

- This appliance is for built-in or freestanding household use only.
- Do not use outdoors.
- Do not use the appliance to heat a room.

Cooking Safety

- Do not allow aluminum foil, paper or cloth to come in contact with a hot zone.
- Avoid preparing food in aluminum foil or plastic containers over the hot cooking zones.
- Protective liners - Do not use aluminum foil to line cooking zone, drip bowls or oven bottoms, except as suggested in the manual. Improper use of these liners may result in a risk of electric shock or fire.
- Do not allow pans to boil dry or empty.
- Never leave the cooktop unattended when in use.
- Always use the proper pot and pan size. The use of undersized cookware will expose a portion of the hot zone, which can result in ignition of clothing or personal burns.
- Always remove the covers on sealed or canned goods and before heating to avoid explosion.
- Close supervision is necessary when any appliance is used by or near children.
- Do not touch hot surfaces. Use dry pot holders to hold the handles of pots and pans.
- Use only dry potholders - moist or damp potholders on hot surfaces may result in burns from steam. Do not let the potholder touch hot heating elements. Do not use a towel or other bulky cloth.
- The appliance is manufactured in compliance with the relevant safety standard.
- Nevertheless, we strongly recommend that a person with physical or mental impairments not use the appliance unless accompanied by a qualified person. The same recommendation applies to children.
- When the unit is on, do not touch outside the control panel as the surface may contain residual heat.
- It is important to be aware that the unit's surface will remain hot for a short period of time after use. Do not touch hot surfaces.

Cleaning Safety

- Clean Cook-Top with Caution - If a wet sponge or cloth is used to wipe spills on a hot cooking area, be careful to avoid steam burns. Some cleaners can produce steam or noxious fumes if applied to a hot surface.
- Do not use steam cleaners or high-pressure cleaners to clean the cooktop, as this may result in electric shock.

Condition of Unit

- Do not operate any appliance with a damaged cord or plug or after the appliance malfunctions or has been damaged in any manner. Return appliance to the nearest authorized service facility for examination, repair, or adjustment.
- **Do Not Cook on Broken Cook-Top** – If cook-top should break, cleaning solutions and spillovers may penetrate the broken cook-top and create a risk of electric shock.

Environment of Unit

- To reduce the risk of fire, do not place any heating or cooking appliances beneath the appliance.
- To reduce the risk of fire, do not let any objects (glass, paper, etc.) obstruct the inlet under your cooktop.
- To reduce the risk of electric shock, do not mount unit over a sink.
- To reduce the risk of fire, do not store anything directly on top of the appliance surface when the appliance is in operation.
- Always have a working smoke detector in or near the kitchen.
- Do not leave lids or other metal objects such as knives, forks or spoons on the cooktop. If the cooktop is turned on, these objects can heat up quickly and may cause burns.
- Do not place rough or uneven objects on the units as they may damage the surface.
- If the cooktop is near a window, ensure that curtains do not blow over or near the unit.
- Do not use the cooktop as a work surface. Certain substances such as salt, sugar, or sand can scratch the glass ceramic surface.
- Do not store hard or pointed objects over the cooktop as they can damage the unit if they fall on top.
- Do not put detergents or flammable materials in the equipment installed under the cooktop.
- Extreme caution must be used when moving an appliance containing hot oil or other hot liquids.
- Do not place the unit on or near a hot gas or electric burner or in a heated oven.
- While cooking any overflowed fat or oil on the cooktop may ignite. There is a risk of burning and fire; therefore, control the cooking process at all times.
- The use of accessory attachments not recommended by the appliance manufacturer may cause injuries.
- Items with a magnetic field such as: radios, televisions, credit cards, cassette tapes etc., can affect the unit.
- The marked electrical rating should be at least as great as the electrical rating on the appliance.
- To prevent accidents and achieve optimal ventilation, allow for sufficient space around the cooking area.
- Do not store items of interest to children in cabinets above the range or on the backguard of a range - children climbing on the range to reach items could get seriously injured.

- Use proper cookware size - This appliance is equipped with two cooking zones of different sizes. Choose cookware with a flat bottom large enough to cover the unit heating surface. The use of undersized cookware will expose a portion of the heating surface where direct contact may be made and cause serious injury. Compatible cookware will improve efficiency.
- To reduce risk of burns, ignition of flammable materials, and spillage due to unintentional contact with cookware, the cookware handles should be turned inward and not extend over adjacent heating surface.
- Wear proper apparel - loose fitting or hanging garments should never be worn while using the appliance.

Power Cord Safety

- To protect against electric shock, do not immerse cord, plugs, or main body in water or any other liquid.
- Do not let cord hang over edge of table or counter.
- Do not allow cord to touch hot surface.
- A short power supply cord or detachable power supply cord should be used to reduce the risk of becoming entangled in or tripping over a longer cord.
- Unplug from outlet when not in use and before cleaning. Allow to cool before performing any maintenance or repairs.
- Always attach plug to appliance first, then plug cord into the wall outlet. To disconnect, turn any control to off, then remove plug from wall outlet.
- The cord should be arranged so that it will not drape over the countertop where it can be pulled on by children or tripped over.

Service and Repair Safety

- Do not repair or replace any part of the appliance unless specifically recommended in the manual. All other services should be referred to a qualified technician.
- There are no user serviceable parts on this appliance. Only an authorized service representative should attempt to service your cooktop.

This product may not be treated as household waste. Instead it should be handed over to the applicable collection point for the recycling of electrical and electronic equipment. By ensuring this product is disposed of correctly, you will help prevent potential negative consequences for the environment and human health, which could otherwise be caused by inappropriate waste handling of this product. For more detailed information about recycling of this product, please contact your local city office, your household waste disposal service or the shop where you purchased the product.

SAVE THESE INSTRUCTIONS

SUMMIT APPLIANCE Felix Storch, Inc.

Installation

USE ---- COUNTERTOP

Please find **4 feet** in the packaging, you can screw them into the bottom of the unit, then the unit can be used directly on the countertop.

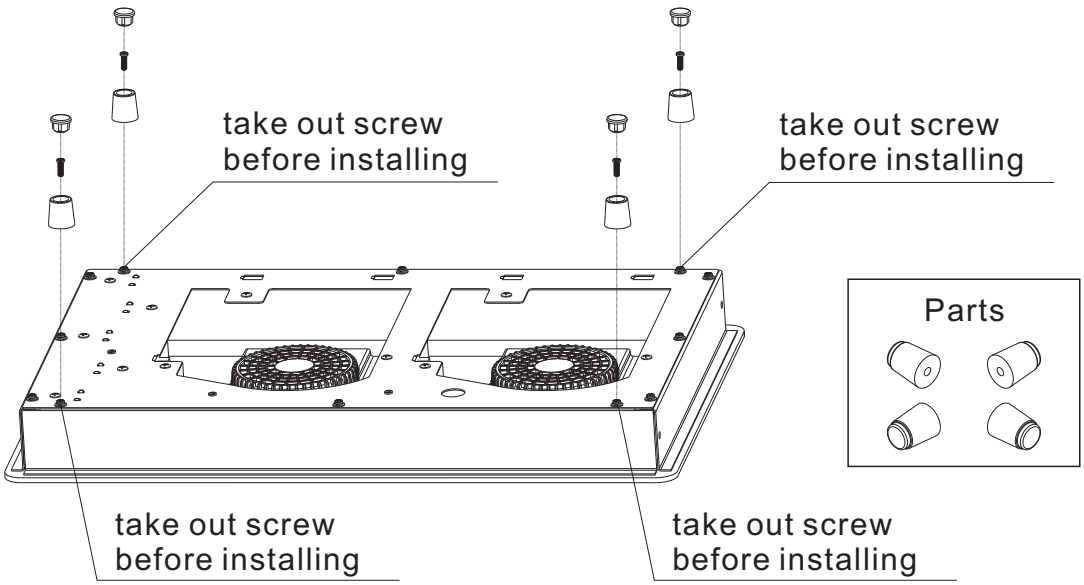

USE ---- DROP-IN

This appliance is not user serviceable. Installation must be completed by a qualified technician.

Cooktop Installation

1. Cut an opening in the counter surface. Refer to the drawings on the following pages for appropriate dimension sizes and follow these instructions:
   - Keep a minimum of 2 inches of space free of two side around the opening.
   - Select heat-resistant table material to avoid damage caused by heat radiation.

- Ensure that the underside of the induction cooktop is well ventilated and the air inlet is not blocked.
- The distance between the cooktop and any cupboard above the appliance should be at least 30 inches.

2. After cutting the opening, remove any shavings or other loose material that may interfere with the appliance's operation.

3. **IMPORTANT NOTE:** Do not seal the cooktop to the countertop. It must be removed if service is necessary.

4. **IMPORTANT NOTE:** For unframed installation, adhere foam strip to the outer edge of the glass, not the support frame.

Before installing the cooktop

1. Ensure that cooktop is turned OFF.
2. Visually inspect the cooktop for damage.
   Also make sure all cooktop screws are on tight.
3. Place the cooktop into the countertop cutout.

Model and Serial Number Location

The serial plate is located under the cooktop. When ordering parts for or making inquiries about your cooktop, always be sure to include the model and serial numbers and a lot number or letter from the serial plate on your cooktop.

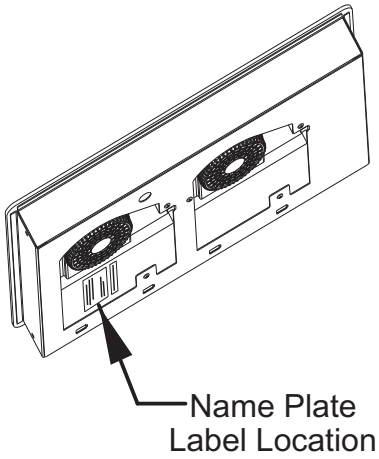

Installation

MODEL SINC2B120
120V 60Hz
1800W

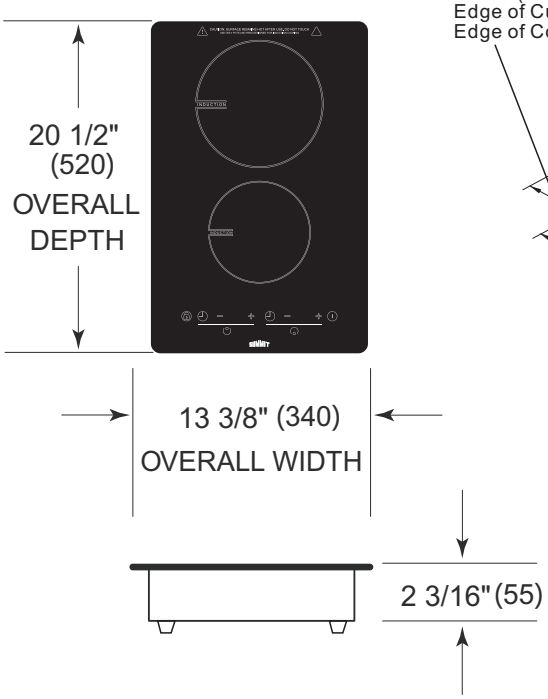

Overall Dimensions

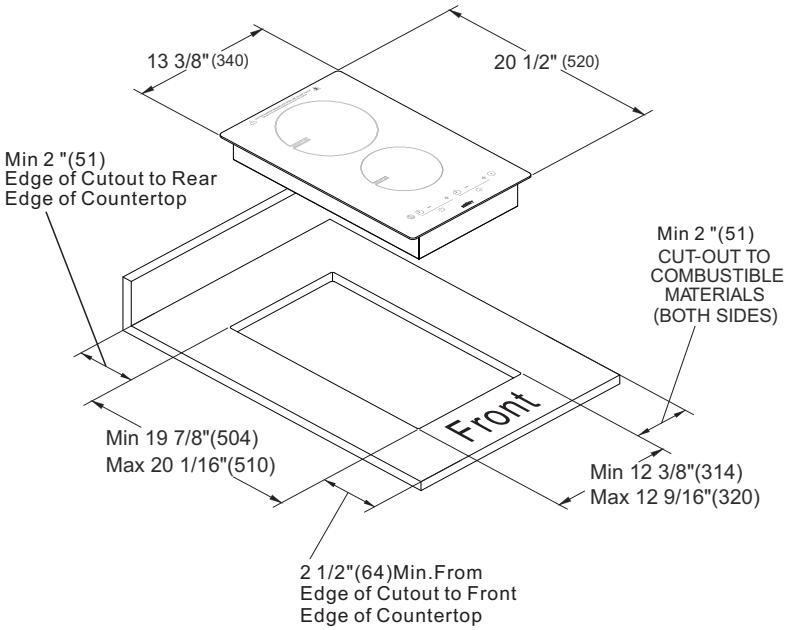

MODEL SINC2B120	
Overall Width	13 3/8"(340)
Overall Depth	20 1/2"(520)
Overall Height	2 3/16"(55)
Minimum Height Clearance	**5 3/16"(132)**
Cut-Out Depth	Min 19 7/8"(504) / Max 20 1/16"(510)
Cut-Out Width	Min 12 3/8"(314) / Max 12 9/16"(320)

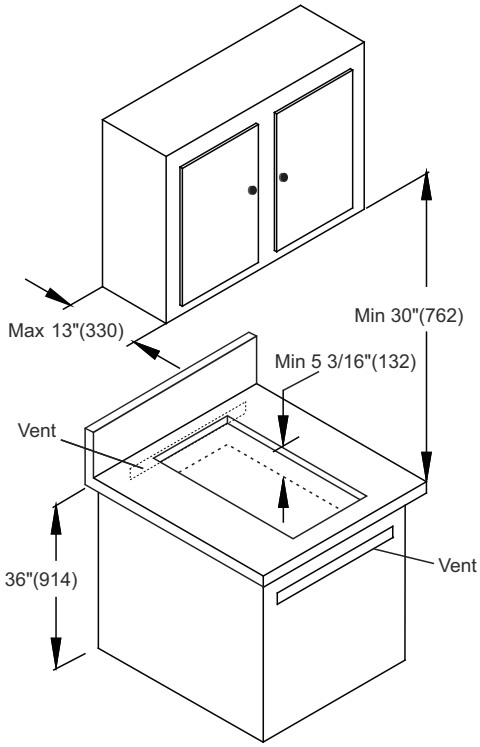

Electrical Connection

Note: This appliance must be installed in accordance with National Electrical Codes, as well as all state, municipal and local codes. The correct voltage, frequency, and amperage must be supplied to the appliance from a dedicated grounded circuit which is protected by a correctly sized circuit breaker or time delay fuse. Appliance voltage, frequency, and amperage ratings are listed on the product rating plate.

For model SINC2B120, plug the cord into a grounded outlet.

Model	Voltage	Frequency	Minimum Circuit Breaker Amperage	Total Watts
SINC2B120	120	60	20	1800

To test the connection:

1. Clear the surface of the countertop.
2. Clean cooktop surface.
3. Plug the cord into an electric socket.
4. Verify that the appliance is functioning properly.

How to Use Your Cooktop

Getting Started

Before operating your induction cooktop, clean the surface (see CLEANING YOUR COOKTOP for instructions) to remove any foreign substances that may remain from packaging, shipping and installation.

The following illustration shows a typical control panel for an induction cooktop:

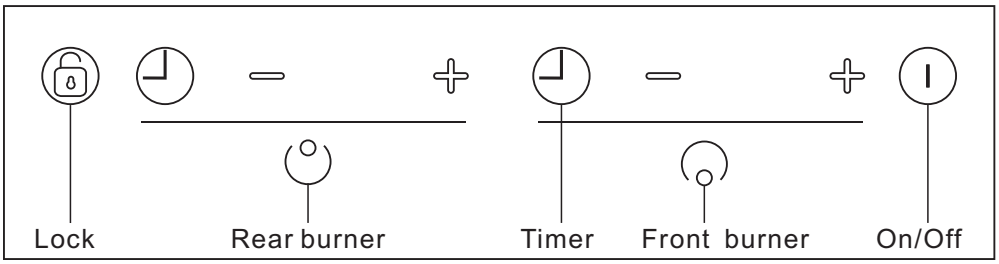

Upon inserting the power plug into an electric socket, the induction cooktop will make a “beep” sound once, and all the digital lights on the cooktop will blink once, then the indicator light will turn on above the “Lock” key, indicating the unit enters into the **Standby and Lock Mode**.

Standby Mode

In the **Lock Mode**, press “Lock” key, the unit will make a “beep” sound once and lock light will turn off, indicating the lock has deactivated. The unit is now on standby mode.

Lock

Activating the Child Safety Lock when the cooktop is in the standby mode: Child Lock prevents activation of any sensor key, except for the “Lock” key, so you must deactivate the child lock, then press the “ON/OFF” key to enter into **Readiness Mode**.

Activating the Child Safety Lock during cooktop use: Child Lock prevents activation of any sensor key, except for the “ON/OFF” key and the “Lock” key.

A. Manual: Press the Lock key to activate the function. The unit will make a “beep” sound and the indicator light will turn on above the Lock key. The controls are now locked.

B. Automatic: The induction cooktop will automatically enter into Lock mode if any key is not pressed within 5 minutes. The unit will make a “beep” sound and the indicator light will turn on above the “Lock” key when the automatic Lock mode is activated.

Switch off the lock

While in Lock mode, press the Lock key to deactivate the function. The indicator light will turn off.

Turning Off Unit

a. When use of the specific element is complete, press “-“ key until the digital display reads “0” and blinks for 60s. The desired element will shut off.

b. When use of the cooktop is complete, press the “ON/OFF” key. “ON/OFF” light will turn off, indicating the unit is now in the standby mode.

Note: Please do not pull the power plug until the cooling fan has stopped.

Readiness Mode

While in the **Standby Mode**, press the “ON/OFF” key; it will make a “beep” sound once and “ON/OFF” light is lit up, indicating that the induction cooktop functions are ready to use. The unit will automatically return to standby mode and “ON/OFF” light turn off if heating zone is not turned on within 30 seconds.

Heating

Place cookware on the cooktop. Please select from the Power Setting to begin cooking.

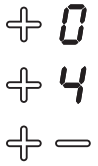

Power Setting Mode: This function cooks at power (wattage) settings. When the unit is in the **Readiness mode**, if you would like to turn on desired element, press “+” key once, the specific digital display will show “0” and be blinking. Press “+” key secondly within 60s to enter into level 4 directly, then you can press “+” or “-“key to select desired power level. The unit will automatically return to standby mode if the second “+” key is not chosen within 60 seconds. If the user wants to set the timer for the unit to shut off automatically, please refer to the Set Timer method. Heating power level settings:

Level / Power	0	1	2	3	4	5	6	7	8
Rear 1800W	0	300 (500W ON6S OFF4S)	500	700	900	1100	1300	1500	1800
Front 1300 W	0	300 (500W ON6S OFF4S)	500	700	900	1100	1300		

Note: This function is equipped with safeguards against parching. The unit might shut off automatically when this function is used for frying, stir-frying, grilling and other high temperature cooking formats.

Power sharing

When both burners are on, one of the two burners would not have a power level higher than level 6. Both of them together would not be more than Max 8.

If only one burner is on, the heating zone can maintain its full heat setting. But when operating both burners, their combined total is Max 8, meaning that when operating the two burners at the same time, they’ll self adjust levels accordingly. When you increase the power of one side, the power output of the other side will reduce automatically if their combined total is more than Max 8(i.e., one side is at 5, the other burner automatically reduces power to level 3, creating a total max 8 setting).

Set Timer mode

The automatic timer settings range from 1 minute to 99 minutes. (**Note**: there is no “seconds” and “hours” display, only minutes.)

When the unit is in the cooking mode, press the “Timer” key. The “Timer” indicator light is lit up, indicating the cooktop has entered Set Timer Mode; the digital display reads “00” and blinking. Press “+” or “-” key to set the desired number, then press “Timer” key to complete setting. (Setting is also complete if neither the "+" nor "-" key is pressed for 10 seconds.) Once the Timer is set, the Minute Timer begins the countdown and digital display will stay on the previous power setting. Once the Minute Timer reaches “00”, the cooktop will sound “beep” and the specific heating element will shut off automatically.

To Cancel timer: While in timer status, press “Timer” key; the digital display shows countdown time. Then press “+” or “-” key until the digital display reads “00” and timer display will blink for 10 seconds and then go off. The timer is no longer active.

Hot Surface Indicator

After using any of the cooking zones, the cooktop will remain very hot. Even after turning off the entire unit, the surface of the cooktop will remain hot for some time. The display for the cooking zones will show an “H” to warn the user that the surface is hot to the touch. (The temperature of heating zone is more than 140℉.) Wait until the “H” is no longer displayed to clean the unit. You may turn the unit back on even if the “H” is displayed.

Notes on Using Your Cooktop

This appliance will get hot during use and will remain hot for a time after use.

Never heat empty cookware. This can damage both the cookware and the appliance.

Remember to turn off cooktop after use.

Keep unit away from a gas range or other heat source. If the surrounding temperature is too hot, the cooktop will stop heating.

Make sure to wipe off water from the bottom of the pot before heating.

Use caution when boiling water. During the boiling process, hot water may splash out.

Compatible Cookware

The quality of your cooking is dependent on the cookware you use. Because induction cooking requires a magnetic vessel for heating, only certain materials can be used on your cooktop.

Proper Cookware

Flat-bottom pots or pans with diameter from 12 to 26 cm (4.7 to 10.83 inches) made from the following:

- Magnetic stainless steel
- Cast iron
- Enameled iron
- Nickel

Improper Cookware

Pots or pans with or made of the following CANNOT be used on your cooktop:

- Non-magnetic stainless steel
- Bottom measuring less than 12 cm (4.7 inches)
- Pot with stands
- Heat resistant glass
- Ceramic container
- Copper
- Aluminum

If you are unsure about the usability of your cookware, simply take a magnet (such as one on your refrigerator) and hold it under the bottom of your pot or pan. If the magnet sticks, the cookware CAN be used on the induction cooktop.

Cleaning Your Cooktop

After each use, unplug or turn off the power and let your unit cool down completely. When it is cool to the touch, apply approximately 1 teaspoon (5 ml) of nonabrasive cleaner to the surface of the ceramic glass with a lightly dampened cloth. Use a second cloth to remove any remaining cleaner residue. Wipe dry with a dry cloth.

Do NOT use the following to clean your unit:

- Glass cleaners which contain ammonia or chlorine bleach as these materials may stain the cooktop
- Caustic cleaners that may etch the surface
- Abrasive cleaners
- Metal scouring pads and scrub sponges
- Powdery cleaners containing chorine bleach
- Flammable cleaners such as lighter fluid or WD-40

Note: Sugary products can damage the ceramic glass surface. If dry sugar, sugar syrup, tomato products, or milk spills on the surface DURING heating, clean immediately.

Metal Marks and Scratches

1. Be careful not to slide pots and pans across your cooktop. It will leave metal markings on the cooktop surface. These marks are removable using a ceramic cooktop cleaner with cleaning pad for ceramic cooktops.

2. If pots with a thin overlay of aluminum or copper are allowed to boil dry, the overlay may leave black discoloration on the cooktop. This should be removed immediately before heating again or the discoloration may be permanent.

Note: If the ceramic glass top of the cooktop is broken, turn off the unit; the cooktop glass will have to be replaced. In this case, contact Summit Appliance for assistance.

Troubleshooting Guide

If you encounter the following problems while using your cooktop, check the guide below to see if you can correct the problem yourself before calling for assistance:

Problem	Possible Cause	Solutions
• Cooktop does not work	• Cooktop controls are locked • Power outage	• Make sure Lock mode is turned off • Check house lights to confirm power outage
• Cooktop does not heat	• No cookware or improper cookware placement on the cooking zone • Incorrect cookware size for the selected cooking zone • Cookware is not properly resting on cooking zone • Incorrect Cooking Zone selected • No power to cooktop	• Make sure that the cookware is centered on the cooking zone, and that cookware is also of correct type for induction cooking. See **COMPATIBLE COOKWARE** • The bottom of the cookware must be large enough to cover Cooking Zone completely. See **COMPATIBLE COOKWARE** • Cookware bottoms must be flat and centered on the Cooking Zone. See **COMPATIBLE COOKWARE** • Make sure the correct control is ON for the Cooking Zone being used • See “Cooktop does not work” above
• Cooktop turns off while cooking	• Cooktop internal heat sensor has detected high temperature inside the cooktop, activating automatic shut off • Liquid or object on the controls area	• Make sure the cooktop vents are not blocked • The cooktop features an automatic shutoff feature that turns off the entire cooktop if any Cooking Zone has been on continuously for 2 hours • The cooktop control panel may register liquids or objects obstructing the panel, which can cause the cooktop to shut off. Clean up spills or remove objects and restart the unit

• Power sharing	• When two heating zones are turned on, will create a total max 8 setting	• See **POWER SHARING**
• The fans keep running for one minute after the unit has been switched off	• The electronics are cooling down	• This is a normal occurrence
• “E0”appears in the digital display	• IGBT overheating	• Turn off unit to allow IGBT to cool. Restart unit
• “E1” appears in the digital display	• No cookware found or improper placement of cookware on the cooking zone	• Make sure that the cookware is centered on the cooking zone, and that it is also induction compatible. See **COMPATIBLE COOKWARE**
• “E2” appears in the digital display	• Supplied voltage to cooktop is too low	• If the voltage of the power supplied to the cooktop is too low, it cannot operate properly and will show this error code. This may be caused by reduced voltage being supplied to the house circuit. If connections are correct and the supplied voltage returns to normal, the code will disappear
• “E3” appears in the digital display	• Supplied voltage to cooktop is too high	• If the voltage of the power supplied to the cooktop is too high, it cannot operate properly and will show this error code. This may be caused by increased voltage being supplied to the house circuit. If the connections are correct and the supplied voltage returns to normal, the code will disappear
• “E7” appears in the digital display	• NTC1 Break off	• Turn the cooktop OFF; then pull plug out for about 30 seconds. Then re-insert the plug and turn the cooktop on using the POWER pad. If the error message is still displayed, call for service
• “E8” appears in the digital display	• NTC1 Short circuit	
• “E9” appears in the digital display	• NTC2 Break off	
• “EE” appears in the digital display	• NTC2 Short circuit	

If your unit is still not functioning properly, call SUMMIT toll-free at 800-932-4267 to speak with a representative.

SUMMIT APPLIANCE Felix Storch, Inc.

Warranty

FELIX STORCH, INC.
770 Garrison Avenue
Bronx, NY 10474
718-893-3900

SUMMIT LIMITED WARRANTY

SUMMIT Appliances warrants this product to be free from defects in materials and workmanship for a period of one year from the date of original purchase or delivery. Any parts determined to be defective will be replaced by SUMMIT at no charge to you. Plastic parts, liners, and outer cabinets are warranted to be manufactured to commercially acceptable standards and free from defects at the time of delivery.

This limited warranty does not apply to:

1. Improper installation
2. Customer misuse, negligence or damage
3. Incorrect electrical current
4. Products with serial number altered or removed
5. Products sold or used outside the fifty United States or District of Columbia
6. Commercial or industrial users
7. Damage to this product from accidents, alterations, failure to follow instructions, fire, floods, earthquakes, war, civil disturbance or Acts of God.

SUMMIT is not liable for consequential or incidental damage.

MAIL WARRANTY CARD TO:

Felix Storch, Inc.
SUMMIT APPLIANCE DIV.
770 Garrison Avenue
Bronx, NY 10474

Printed in China

✂----------

FACTORY REGISTRATION CARD

THANK YOU FOR PURCHASING A QUALITY SUMMIT APPLIANCE

SUMMIT Model No. _____ Serial No._____
Customer's Name _____ Date of Delivery _____
Address _____ Apt No. _____
City _____ State _____ Zip _____
Dealer's Name _____ City _____ State _____
Is this unit for: ☐ Private Home ☐ Apartment ☐ Office ☐ Other_____
Reason for selecting this unit: ☐ Dealer Recommendation ☐ Features ☐ Size ☐ Price
☐ Other _____

SUMMIT APPLIANCE Felix Storch, Inc.

Built-In Oven

Installation Manual

500/800/Benchmark™ Series
HBL5351UC, HBL5451UC, HBL5551UC, HBL5651UC, HBL8451UC, HBL8461UC, HBL8651UC, HBL8661UC, HBLP451LUC, HBLP451RUC, HBLP451UC, HBLP651LUC, HBLP651RUC, HBLP651UC, HBN5451UC, HBN5651UC, HBN8451UC, HBN8651UC

BOSCH
Invented for life

Table of Contents

Safety Definitions 1
Safety Information 1
Preparation 3
Before You Begin 3
Tools and Parts Needed 3
Parts Included 3
General Information 3
Dimensions and Cabinet Requirements 4
Removing Packaging 4
Preparing Oven 4
Installation 5
Electrical Installation 5
Installing the Oven Unit into the Wall Cabinet 6
For Best Installation 6
Correct Inside Oven Lift Point 6
Installing the Oven 8
Bottom Hinge Doors Only - Remove Prior to Install 8
Installing the Oven into the Cabinet (all ovens) 9
Ovens with Bottom Hinge Doors Only 10
Ovens with Side Hinge Doors Only 10
Before Calling Service 13
Cabinet Dimension Requirements . 15
Dimensions for 27” Single Oven Units . . 15
Single Oven 27” Traditional Installation, Cabinet and Undercounter 15
Single Oven 27” Flush Mount Installation . . 15
Dimensions for 27” Double Oven Units . . 15
Double Oven 27” Traditional Installation . . . 15
Double Oven 27” Flush Mount Installation . . 16
Dimensions for 30” Single Oven Units . . 16
Single Oven 30” Traditional Installation, Cabinet and Undercounter 16
Single Oven 30” Flush Mount Installations . 16
Dimensions for 30” Double Oven Units . . 17
Double Oven 30” Traditional Installation . . . 17
Double Oven 30” Flush Mount Installion . . . 17

This Bosch Appliance is made by
BSH Home Appliances Corporation
1901 Main Street, Suite 600
Irvine, CA 92614

Questions?

1-800-944-2904

www.bosch-home.com/us

We look forward to hearing from you!

⚠ IMPORTANT SAFETY INSTRUCTIONS

READ AND SAVE THESE INSTRUCTIONS

Safety Definitions

⚠ WARNING

This indicates that death or serious injuries may occur as a result of non-observance of this warning.

⚠ CAUTION

This indicates that minor or moderate injuries may occur as a result of non-observance of this warning.

NOTICE: This indicates that damage to the appliance or property may occur as a result of non-compliance with this advisory.

Note: This alerts you to important information and/or tips.

Safety Information

IMPORTANT: SAVE THESE INSTRUCTIONS FOR THE LOCAL INSPECTOR'S USE.

INSTALLER: LEAVE THESE INSTRUCTIONS WITH THE APPLIANCE AFTER INSTALLATION IS COMPLETE.

OWNER: PLEASE RETAIN THESE INSTRUCTIONS FOR FUTURE REFERENCE.

⚠ WARNING

If the information in this manual is not followed exactly, fire or shock may result causing property damage or personal injury.

⚠ WARNING

Do not repair or replace any part of the appliance unless specifically recommended in the manuals. Improper installation, service or maintenance can cause injury or property damage. Refer to this manual for guidance. All servicing should be done by a qualified technician.

Appliance Handling Safety

Do not lift appliance by door handle. Remove the door for easier handling and installation. See instructions in Use and Care Manual.

Unit is heavy and it is recommended that at least two people for single ovens and at least three people for double ovens be used.

Hidden surfaces may have sharp edges. Use caution when reaching behind or under appliance.

Unpacking the Oven

Unpack the oven, remove all tape and packaging material and examine the oven for any damage such as dents, broken door latches or cracks in the door. Notify dealer immediately if oven is damaged. Do not install if oven is damaged.

Safety Codes and Standards

This appliance complies with one or more of the following Standards:

- UL 858, Household Electric Ranges
- UL 923, Microwave Cooking Appliances
- UL 507, The Standard for the Safety of Electric Fans
- CAN/CSA-C22.2 No. 113-M1984 Fans and Ventilators

It is the responsibility of the owner and the installer to determine if additional requirements and/or standards apply to specific installations.

Electric Safety

Before you plug in an electrical cord, be sure all controls are in the OFF position.

If required by the National Electrical Code (or Canadian Electrical Code), this appliance must be installed on a separate branch circuit.

Installer - show the owner the location of the circuit breaker or fuse. Mark it for easy reference.

Important - Save these instructions for the local electrical inspector's use.

Before installing, turn power OFF at the service panel. Lock service panel to prevent power from being turned ON accidentally.

IMPORTANT SAFETY INSTRUCTIONS

READ AND SAVE THESE INSTRUCTIONS

Refer to data plate for more information. See "Data Plate" under "Service" for data plate location.

Be sure your appliance is properly installed and grounded by a qualified technician. Installation, electrical connections and grounding must comply with all applicable codes.

Related Equipment Safety

Remove all tape and packaging before using the appliance. Destroy the packaging after unpacking the appliance. Never allow children to play with packaging material.

Never modify or alter the construction of the appliance. For example, do not remove leveling legs, panels, wire covers or anti-tip brackets/screws.

Transport

To avoid damage to the oven vent, use the transport method shown in the picture below.

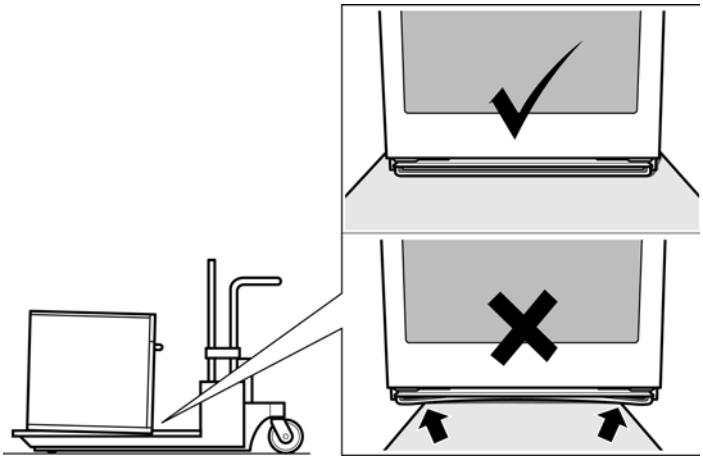

Support the bottom of the oven from side to side when moving it into the installation location. Leave the unit attached to the shipping pallet until it is in front of the cabinet opening, ready to lift into place.

Preparation

Before You Begin

Tools and Parts Needed

- Phillips head screwdriver
- Star-head screwdriver (T20)
- Measuring tape
- Drill with bit (1/8")
- Gloves

Parts Included

- Phillips head screws (6)

General Information

Power Requirements

The outlet must be properly grounded in accordance with all applicable codes.

For Best Installation

The oven can be difficult to handle during installation. It is recommended to have three or more people available to assist with lifting the unit into place.

Removal of the bottom hinge oven door during installation (to provide the necessary handholds and to significantly reduce the unit weight) can be cumbersome unless the detailed door removal instructions are followed carefully.

Note: Do not attempt to remove the side hinge door (some models).

Please take time to read and follow the instructions provided for an improved installation experience.

Checklist

Use this checklist to verify that you have completed each step of the installation process. This can help you avoid mistakes.

___ 1. Before installing the oven, be sure to verify the cabinet dimensions are correct for your unit and the required electrical connections are present**.**

___ 2. Refer to the installation manual for content regarding Safety, Cabinet Dimensions, Removing Packaging, Electrical Installation, Testing the Installation and Customer Service.

___ 3. Remove bottom hinged oven door(s) (not side swing doors) to reduce the unit weight and to provide access to handholds for lifting.

___ 4. Move the oven unit into place in front of the cabinet opening, leaving the bottom packaging on the unit to avoid damaging flooring.

___ 5. Remove the torx head (T-20 size) screws holding the unit to the base of the carton (using Star-head screwdriver).

___ 6. Team lift the unit directly into the cabinet cutout taking care not to pinch fingers or scratch hands or arms. Make sure the electrical conduit reaches to the connection point properly.

___ 7. Slide the unit all the way into place, making sure to route the electrical conduit correctly.

___ 8. Fasten the oven unit to the cabinetry opening with the screws supplied (using Philips screwdriver).

___ 9. Reinstall the oven door(s) removed in step 3 above.

___ 10. Consult the complete installation instructions and follow the remainder of the procedures listed, including performing an operation test.

___ 11. All product literature and accessories (may be wrapped or boxed) with the oven.

___ 12. INSTALLER - Leave the literature pack and the accessories with the customer.

Dimensions and Cabinet Requirements

Cabinet requirements vary depending on the model to be installed. Please consult the “Cabinet Dimension Requirements” section at the back of this installation manual for the details pertaining to your particular model.

All models require:

- 1/4” (6.4 mm) space between the side of the oven and an adjacent wall or cabinet door when installed at the end of a cabinet run.
- Installation of 2x4’s extending front to back flush with the bottom and side of the opening to provide oven support. This supporting base must be well secured to the floor/cabinet and must be level.
- The electrical conduit box must be located above the unit to facilitate connecting and servicing the unit.
- The cabinet base must be flat and capable of supporting the weight of your oven when in use (varies by model up to 390 lbs. (177 kg)). See the appropriate weight for your model in the “Cabinet Dimensions Requirements” section at the back of this installation manual.

Removing Packaging

- Cut straps on the outside of the box.
- Remove the cardboard box by lifting it up and off the unit.
- Remove all top and side cardboard and Styrofoam braces.
- Place the oven (leaving it on the shipping base) in front of the cabinet where it is to be installed.
- Remove all accessories, racks, packing materials and literature from the oven cavity (for double ovens, remove such items, if present, from both cavities).
- Unscrew unit from packaging brackets as shown below in “Packaging Bracket Removal.”

  Note: The screws near the base mounting bracket are all torx head (T-20 size). Only the one screw that goes through the slotted hole in the mounting bracket on the left and right sides of the unit needs to be removed in order to lift the unit from the mounting base (the screw circled and shown as “A” in the following illustration.)

NOTICE

Remove one screw only from each bracket. This will release the oven from the shipping base. Do not remove any additional screws from the oven.

Packaging Bracket Removal (left and right sides)

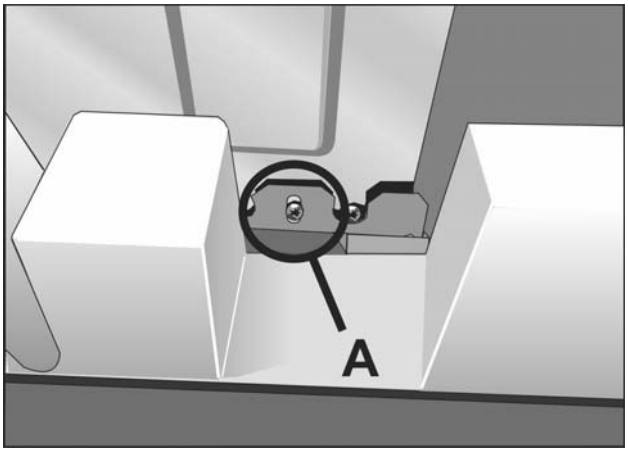

Note:
Different models use different packaging materials. Actual brackets may look differently. The bracket remains in the packaging base. The unit should stay on the packaging base until ready to be lifted into cabinet cutout.

Preparing Oven

Place oven in front of the cabinet where it is to be installed so that it is in line with the cabinet cutout.

Check to be sure all packing materials have been removed from the unit. Also remove the accessories, oven racks, literature pack and any shipping materials from inside the oven cavity (remove from both cavities for a double oven or combination oven).

Installation

This installation manual provides instructions for the installation of single ovens and double ovens.

Electrical Installation

All model ovens on the front cover of this installation instruction manual are dual rated, designed to be connected to either 208 or 240V AC, 60 Hz, 4 wire, single-phase power supply.

Model	Circuit Required	
	208V, 60 Hz	240V, 60 Hz
HBN54, HBN84, HBL53, HBL54, HBL84, HBLP4	30 AMP	
HBL55	30 AMP	40 AMP
HBN56, HBL56, HBN86, HBL86, HBLP6	40 AMP	

The electrical supply should be a 4-wire single-phase AC. Install a suitable conduit box (not furnished). An appropriately-sized, UL-listed conduit connector must be used to correctly attach the conduit to the junction box.

Important: Local Codes may vary; installation, electrical connections and grounding must comply with all applicable local codes.

If local codes permit grounding through the electrical supply neutral, connect both the white neutral wire and the green ground wire from the oven to the white neutral electrical supply wire.

Electrical Connection to Main Power Supply

The four-wire connection is preferred, but where local codes permit, the three wire connection is also acceptable.

Four-wire Connection

Ungrounded Neutral

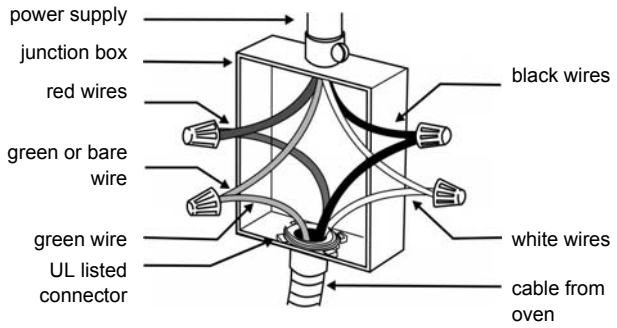

- Connect the red oven wire to the red electrical supply wire (hot wire).
- Connect the black oven wire to the black electrical supply wire (hot wire).
- Connect the white neutral oven wire to the white neutral (not bare or green ground) electrical supply wire.
- Connect the green ground oven wire to the bare or green ground electrical supply wire.

Three-wire Connection

Grounded Neutral

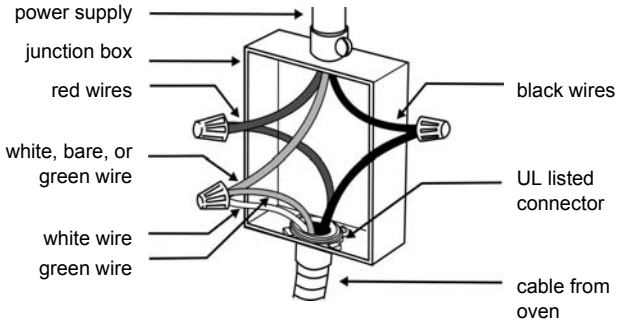

- Connect red wire from oven to red wire in junction box.
- Connect black wire from oven to black wire in junction box.
- Connect both green ground wire and white wire from oven to white, green or bare neutral wire in junction box.

The conduit cable, where connected at the oven, swivels. Rotate conduit cable upward (or downward) and direct through hole prepared in cabinet to attach to the junction box.

To maintain serviceability, the flex conduit must not be shortened and should be routed to permit temporary removal of the oven.

Installing the Oven Unit into the Wall Cabinet

NOTICES

Before installing the oven, be sure to verify the cabinet dimensions and electrical connections. Check that the cabinet opening is level and plumb for correct installation.

For Best Installation

It is recommended to remove the oven door (bottom hinge models only) to help reduce the unit weight and provide easier access to the handholds located inside the oven.

Caution

It is recommended to wear gloves and long sleeves to protect hands and forearms from abrasion and potential scratches during the lifting process. It is also recommended to take off watches and jewelry and to wear work shoes during installation for foot protection.

Correct Inside Oven Lift Point

Notice: DO NOT attempt to lift the unit by holding the oven upper element.

There is a ridge across the top front of the oven cavity. Lift by grasping this ridge with one hand while placing the other hand on the back of the unit (for helpers lifting from the sides of the unit). If a third helper is lifting from the front, both hands should lift by holding this ridge area.

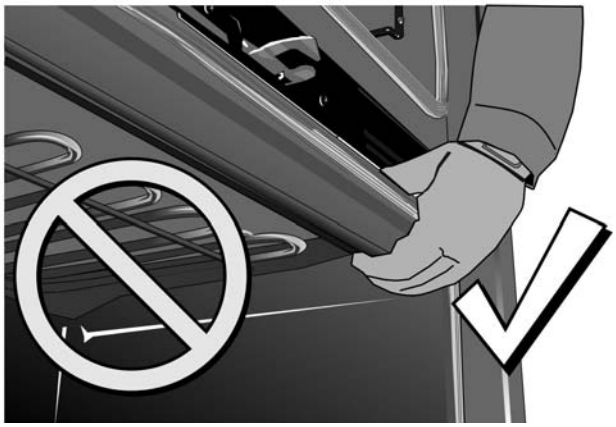

Lifting Recommendations Vary Dependent Upon Oven Door Type

Bottom Hinge Door

Lift Locations (with door(s) removed)

Lift points (1) on the front of the unit are for lifting from the sides of the unit. Lift point (3) on the front of the unit is for a third person to help lift the unit.

Lift point (2) on the back of the unit shows the location of the opposite hand for the helpers lifting from the sides of the unit. Adjust the location as needed to facilitate the lift. Wear gloves, a long sleeved shirt, and avoid sharp edges to reduce the risk of cuts or abrasions to the arms or hands.

Single Oven	Double Oven
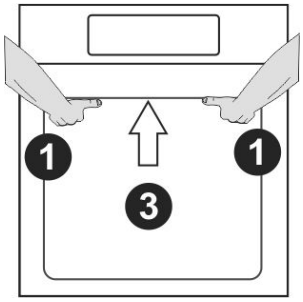	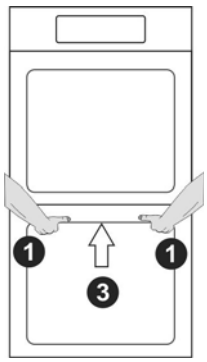
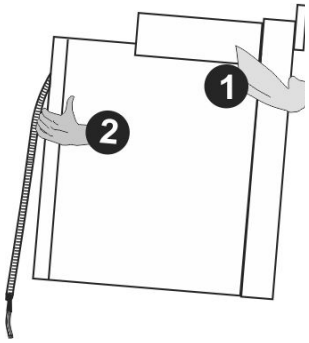	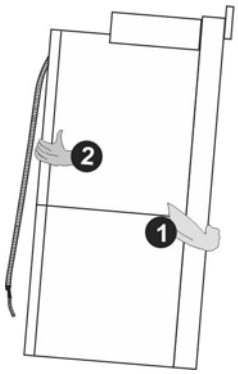

Side Hinge Door

Lift Locations (with lower door opened to 90°-110°)

Lift points (1) on the front of the unit are for lifting from the sides of the unit. Lift point (3) on the front of the unit is for a third person to help lift the unit.

Lift point (2) on the back of the unit shows the location of the opposite hand for the helpers lifting from the sides of the unit. Adjust the location as needed to facilitate the lift. Wear gloves, a long sleeved shirt, and avoid sharp edges to reduce the risk of cuts or abrasions to the arms or hands.

Single Oven - Side Swing	Double Oven Side Swing
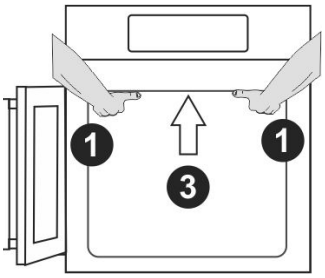	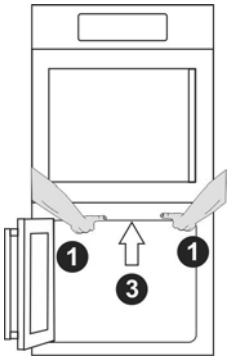
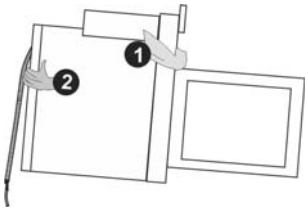	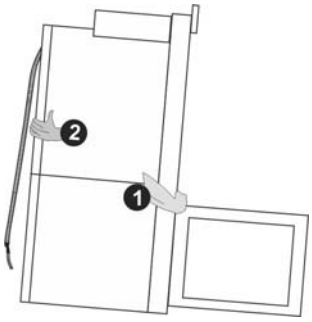

Installing the Oven

WARNING

- Make sure oven is cool and power to the oven has been turned off before removing the door. Failure to do so could result in burns.
- The oven door is heavy and fragile. Use both hands to remove the oven door. The door front is glass. Handle carefully to avoid breaking.
- Grasp only the sides of the oven door. Do not grasp the handle as it may swing in your hand and cause damage or injury.
- Failure to grasp the oven door firmly and properly could result in personal injury or product damage.
- To avoid injury from hinge bracket snapping closed, be sure that both levers are securely in place before removing the door. Also, do not force door open or closed - the hinge could be damaged and injury could result.
- Do not lay removed door on sharp or pointed objects as this could break the glass. Lay on a flat, smooth surface, positioned so that the door cannot fall over.

Bottom Hinge Doors Only - Remove Prior to Install

Important: Do not attempt to remove the side hinge door (side hinge doors are found only on select models)**.**

Ovens with bottom hinge doors permit the oven door(s) to be removed prior to lifting the unit into place. Each door weighs approximately 40 pounds (18.1 kg). Removing and replacing the door are routinely simple procedures. Removing the door lightens the unit significantly and provides easier access to the recommended handhold inside the oven cavity. See instructions below.

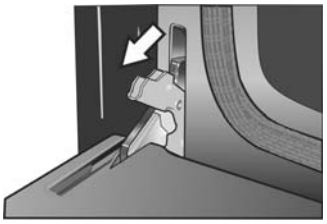

1. Be sure to read all warnings and cautions in the installation manual regarding the door removal before attempting to remove the door.
2. Open the door completely.
3. Flip latch levers on hinges toward you.

4. Holding the door firmly on both sides and using both hands, close the door gently until it stops against the latch levers, about 30º from the closed position.

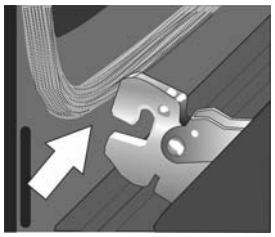

5. Carefully lift the door up and out of the hinge slots. Hold firmly; the door is heavy.

6. Place the door in a convenient and stable location until you are ready to reinstall it. Lay the door on a towel or section of protective foam padding to avoid damage to the door or the floor.

Placing the Oven Unit Into the Cabinet Opening

CAUTION

To avoid damage to the door do not lift, pull or push the unit during installation by using the oven door handle as a gripping point.

It is recommended to wear gloves and long sleeves to protect hands and forearms from abrasion and potential scratches during the lifting process**.** It is also recommended to take off watches and jewelry and to wear work shoes during installation for foot protection.

When lifting the unit into place avoid grasping the upper element to avoid damaging it. See the illustration following for the correct lifting point for a bottom hinge double oven with the lower door removed. This illustration shows a detailed view of the oven cavity. Note the location of the ridge inside the top of the cavity. This is the area to grip from the front when lifting the oven.

For your particular oven type, see the preceeding section "**Lifting Recommendations Vary Dependent Upon Oven Door Type"** for lift points.

Installing the Oven into the Cabinet (all ovens)

1. The unit and its bottom packaging (wood and styrofoam base) should be positioned close to and in front of the cabinet opening prior to beginning to lift the unit into place.
2. Lift or slide unit into the cabinet cutout without allowing the unit base to contact the flooring.
3. Check that the conduit cable does not fall behind the unit during installation. It may help to run the conduit into the area it will be connected to (such as an overhead or adjacent cabinet) and tape the end down so it doesn't fall out while the unit is being slid into place.
4. Guide the unit straight back into the cabinet cutout.

   Note: Be careful not to crimp the flexible conduit between the oven and the cabinet back wall. If necessary, guide the flexible conduit into the wall or cabinet access hole so it doesn't prevent the unit from being pushed all the way into the cabinet opening. The oven should be straight and level, not crooked.
5. Push the unit straight in until the oven trim is flush with the front of the cabinet trim.
6. Install supplied screws through tap holes in trim. (2 screws for single ovens, 4 screws for double ovens).

Ovens with Bottom Hinge Doors Only

Re-Install the oven doors:

	1. Hold the door firmly in both hands. 2. Hold the door at a 30º angle from the closed position and insert hinges into the slots. You may need to rock the door forward and backward slightly to seat the hinge feet.
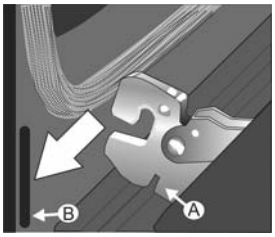	3. The door may need to be removed and re-inserted until the hinges sit correctly in the slots.
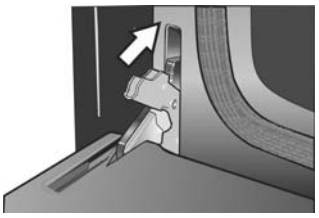	4. Open door all the way to expose hinges, latch levers, and slots. 5. Push latch levers forward and down until seated on the bracket. 6. Close and open door slowly to be sure it is correctly and securely in place. Door must be straight, not crooked.

Ovens with Side Hinge Doors Only

Side Hinge Door Aligment

Note: Only align the side hinge oven doors after the unit is fully installed into the cabinet.

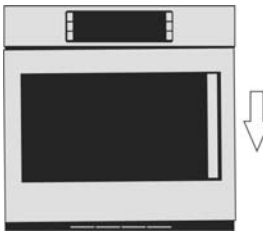

Fig. A

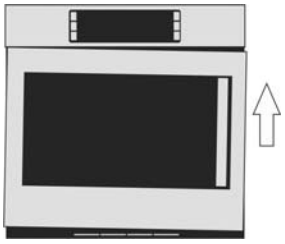

Fig. B

1. Check to see if the side hinge oven doors are properly aligned.

   The door should pull itself closed smoothly when the striker engages the roller as the door is closed.
2. Too high (Fig. A - door needs to move down on latch side) you will feel interference between the striker and the catch receiver.
3. Too low (Fig. B - door needs to move up on latch side) you will feel a bump when the striker comes into contact with the re-alignment roller.

   Hint: The gap between the top of the closed oven door and the control panel (or upper door for lower cavities in double ovens) should be fairly uniform from side to side.

Side Hinge Door Alignment Procedure

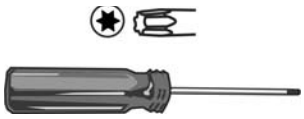

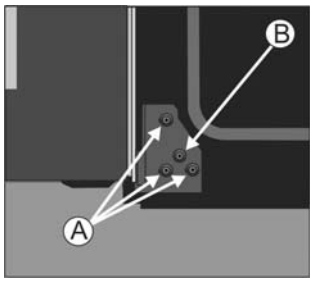

1. Open the door to approximately 135°.
2. Using a Torx T-20 star-head screwdriver, loosen the 3 screws (A) on the lower hinge by 1 to 2 full turns.

   Note: All adjustment is made with the lower hinge only. The upper hinge is fixed in place and cannot be adjusted.

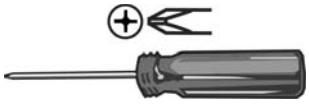

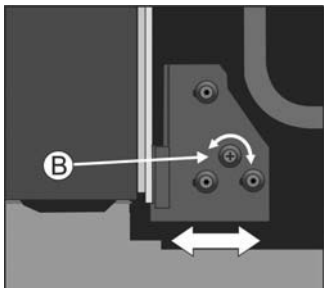

3. Using a #2 philips head screwdriver, turn the cam (B) right or left to adjust the hinge position in the desired direction.

   Note: 1mm of hinge movement (left or right) will move the door up or down approximately 1.5mm at the door catch.
4. Re-tighten the screws before closing the door to test. Be careful not to overtighten.
5. Check for proper door alignment. Repeat adjustment procedure as necessary.

Side Hinge Door Opening/Closing Troubleshooting Guide

Primary observation	Additional observations	Cause	Solution
The door does not pull itself closed and feels difficult to open as well.	The side edge of the inner door (on the handle side of the door) appears to make contact with the unit's side trim.	The installation is causing the side trim to be pushed too far inward.	Check the installation of the unit in the cabinetry. Try to move the unit in the cabinet towards the side of the hinges as much as possible to allow the interfering side trim to open up. May also try to adjust the location of the side trim screws to hold the trim away from the door. Check again the cabinet opening to ensure that it is not too narrow. Widen the cutout as necessary.
The door does not hold itself closed.	Very little force is required to pull open the door.	The door catch mechanism internal to the door has inadvertently tripped while the door was open.	To reset the mechanism, close the door completely and while closed, push in firmly on the door handle until the mechanism resets. A firm push may be required. Open to test.
The door does not close onto the striker smoothly. Once closed, the door opens without incident.	When closing the door onto the striker, the door lifts itself upward. You will feel a slight bump as the roller (internal to the door) hits the tip of the striker and lifts the door. If the door needs to lift substantially, the door will no longer pull itself closed, and assistance is required to push it closed fully.	The door alignment is too low to engage properly with the striker. See Figure B in the side hinge door alignment instructions.	Refer to the side hinge door alignment procedure to raise the handle side of the door until the door closes smoothly. It should open smoothly and pull itself closed smoothly without hearing or feeling an interference.
The door does not close onto the striker smoothly. Once closed, the door may also appear to stick while pulling the door open.	While trying to open the door from a closed position, you feel an interference that catches the door and may prevent it from opening. You feel a similar interference when closing.	The door alignment is too high to engage properly with the striker. See Figure A in the side hinge door alignment instructions.	To open a sticking door, apply pressure downward on the handle while pulling. Refer to the side hinge door alignment procedure to lower the handle side of the door until the door closes smoothly. It should open smoothly and pull itself closed smoothly without hearing or feeling an interference.

Testing Operation

1. Turn on power at the breaker.
2. Test the oven mode.

   Select the **BAKE** mode. See the Use and Care Manual for detailed operation instructions.
3. Verify that the oven light comes on and the oven begins to preheat.
4. Test the door lock.

   Set the **SELF CLEAN** mode. Confirm that the door locks when the lock icon appears in the display.
5. If installing a double oven, test the second oven as well.
6. If any of the tests do not result as explained above, contact Bosch service for assistance. Otherwise, the installation is complete at this time.

Before Calling Service

See the Use and Care Manual for troubleshooting information. Refer to the Statement of Limited Warranty in the Use and Care Manual.

To reach a service representative, see the contact information at the front of the Use and Care Manual. Please be prepared with the information printed on your product data plate when calling.

Data Plate

The data plate shows the model and serial number. Refer to the data plate on the appliance when requesting service. The data plate location varies based on the oven model and door hinge type.

Double Ovens, Bottom Hinge

Note: The rating plates (A) are at the left hand side of the door trim of the lower oven cavity.

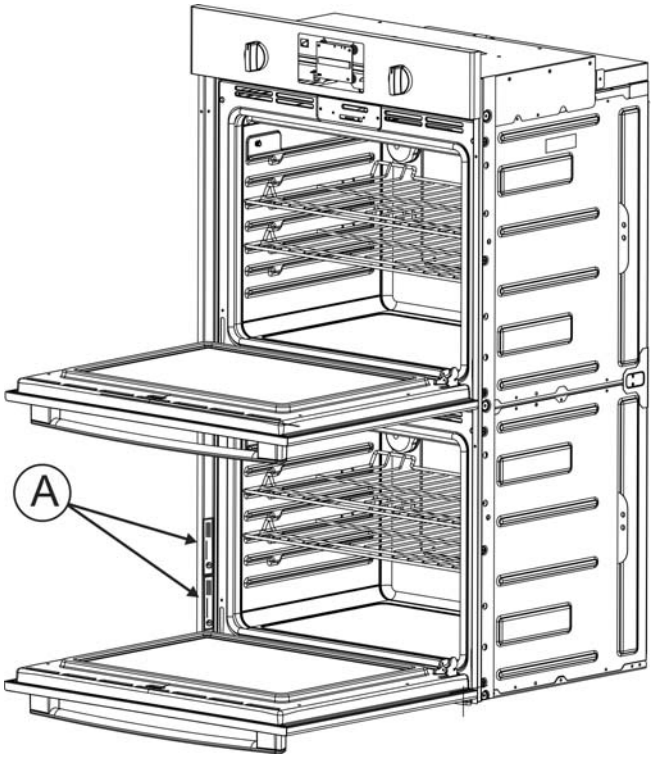

Single Ovens, Bottom Hinge

Note: The rating plates (A) are at the left hand side of the door trim.

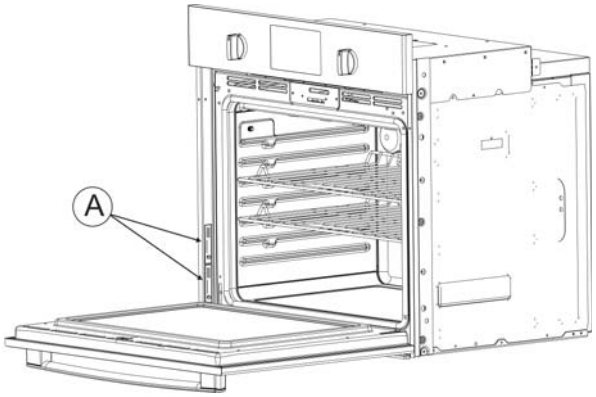

Single Ovens, Side Hinge

Note: The rating plates (A) are opposite the door hinge. For left hinge doors, the rating plates will be on the door trim on the right hand side of the door. For right hinge doors, the rating plates will be on the door trim on the left hand side of the door.

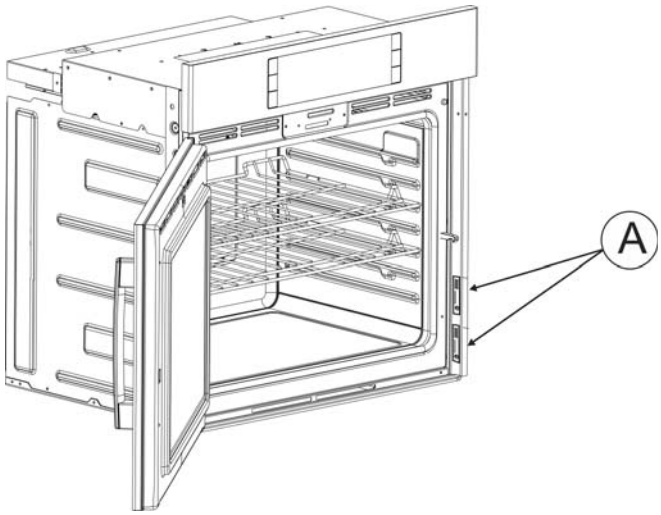

Double Ovens, Side Hinge

Note: The rating plates are opposite the door hinge in the lower oven cavity.

Cabinet Dimension Requirements

It is good practice, when an oven is installed at the end of a cabinet run, adjacent to a perpendicular wall, or cabinet door, to allow at least 1/4” (6 mm) space between the side of the oven and the wall/door.

For oven support, install 2x4’s extending front to back flush with the bottom and the side of the opening. The supporting base must be well secured to the floor/cabinet and level.

Junction boxes can be located anywhere within reach of the oven’s power cable, but be aware that the unit should able to be moved for service.

Dimensions for 27” Single Oven Units

The cabinet opening must be plumb and the base must be flat and level and capable of supporting a weight of at least 193 lbs (87 kg).

Single Oven 27” Traditional Installation, Cabinet and Undercounter

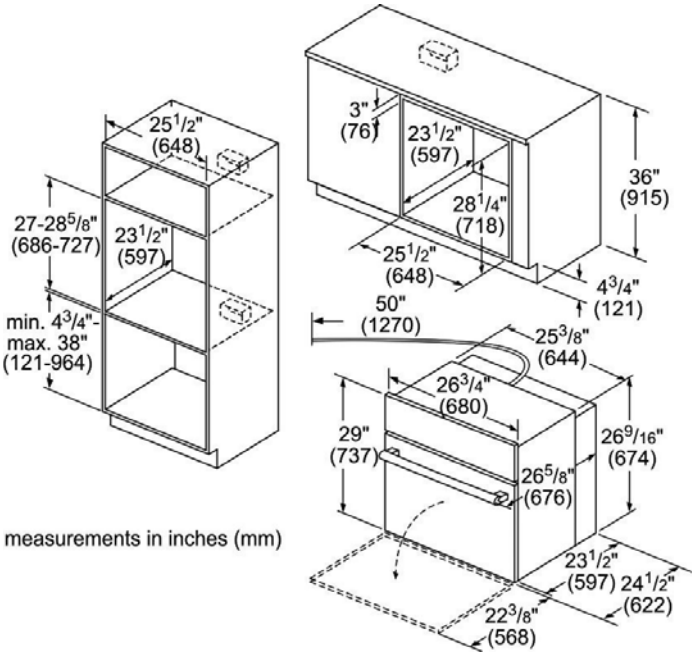

Single Oven 27” Flush Mount Installation

Flush installation (wall mount and undercounter) requires two side cleats to be attached inside the cabinet or counter frame, recessed from the front.

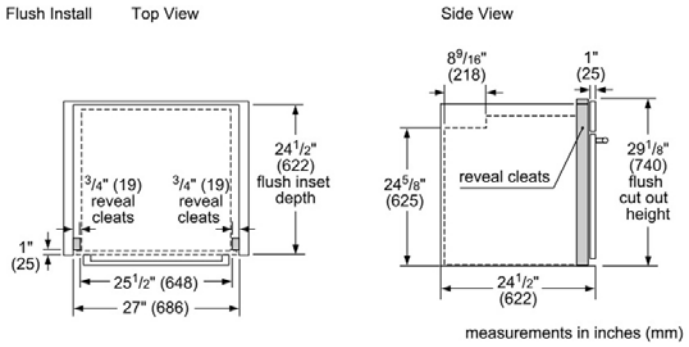

Dimensions for 27” Double Oven Units

The cabinet opening must be plumb and the base must be flat and level and capable of supporting a weight of at least 361 lbs (164 kg).

Double Oven 27” Traditional Installation

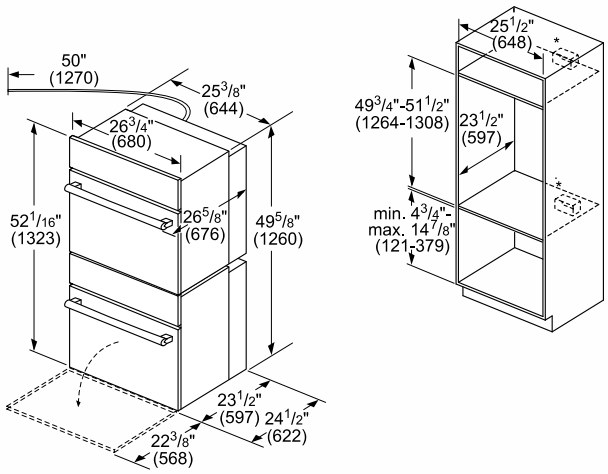

Double Oven 27” Flush Mount Installation

Flush installation requires two side cleats to be attached inside the cabinet frame, recessed from the front.

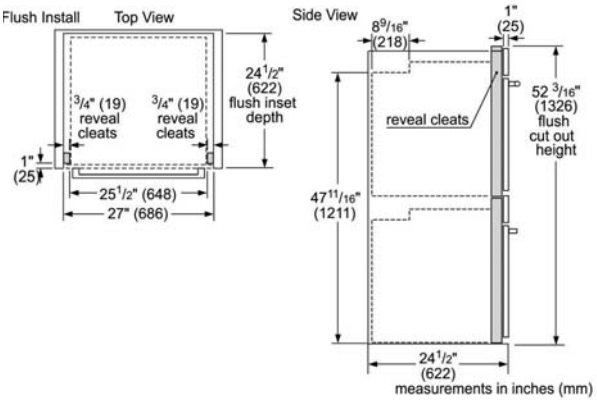

Dimensions for 30” Single Oven Units

The cabinet opening must be plumb and the base must be flat and level and capable of supporting a weight of at least 212 lbs (96 kg).

When installing a side hinge oven, leave at least 10” (254 mm) clearance to allow the door to open.

Single Oven 30” Traditional Installation, Cabinet and Undercounter

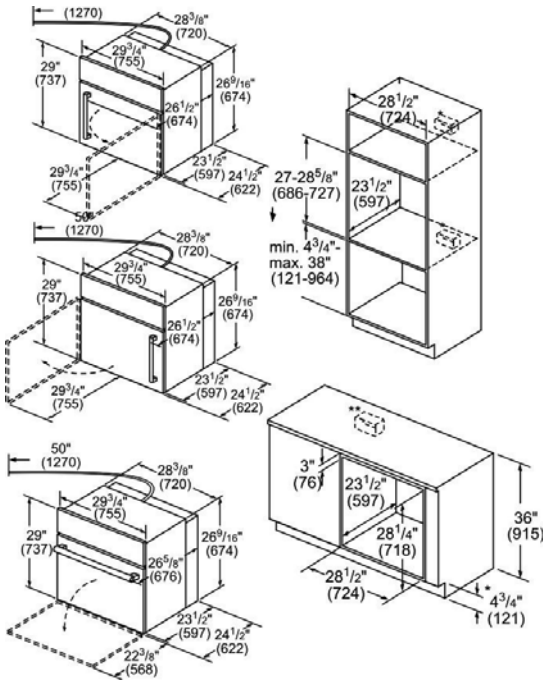

Single Oven 30” Flush Mount Installations

Flush installation requires two side cleats to be attached inside the cabinet frame, recessed from the front.

Top View Right Swing Door

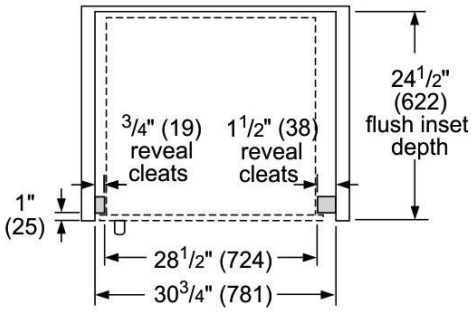

Top View Left Swing Door

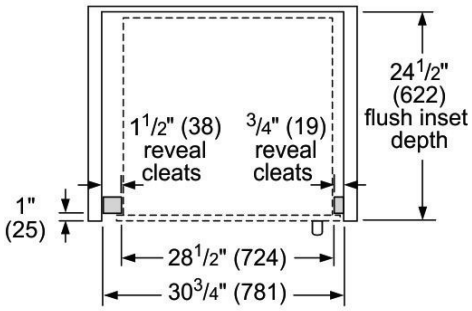

Top View Bottom Hinged Door

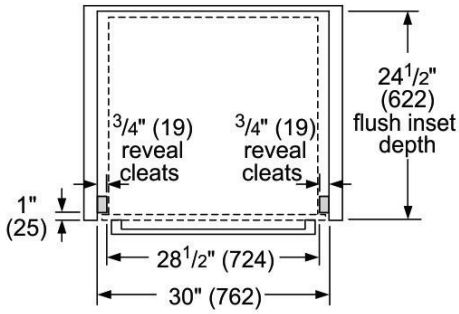

Side View (all)

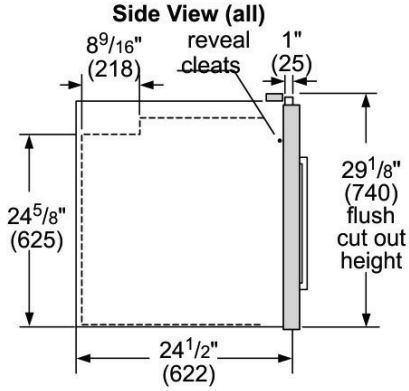

measurements in inches (mm)

Dimensions for 30” Double Oven Units

The cabinet opening must be plumb and the base must be flat and level and capable of supporting a weight of at least 390 lbs (177 kg).

Double Oven 30” Traditional Installation

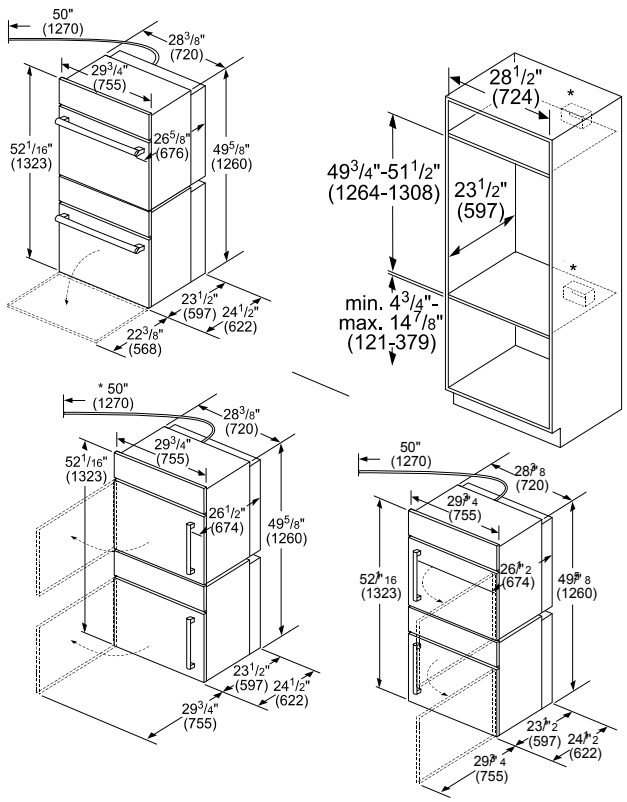

Double Oven 30” Flush Mount Installion

Double Oven 30” Flush installation requires two side cleats to be attached inside the cabinet frame, recessed from the front.

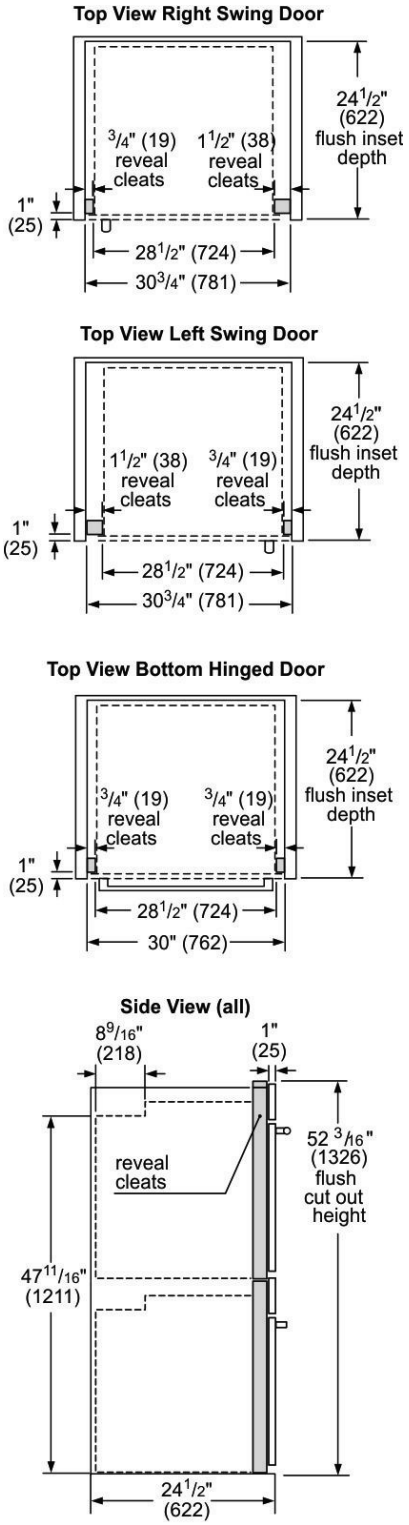

measurements in inches (mm)

Fours simples, Charnière latérale

Remarque : Les plaques signalétiques (A) sont du côté opposé à la charnière de la porte. Pour les portes à charnières à gauche, les plaques signalétiques seront sur la garniture de la porte sur le côté droit de la porte. Pour les portes à charnières à droite, les plaques signalétiques seront sur la garniture de la porte sur le côté gauche de la porte.

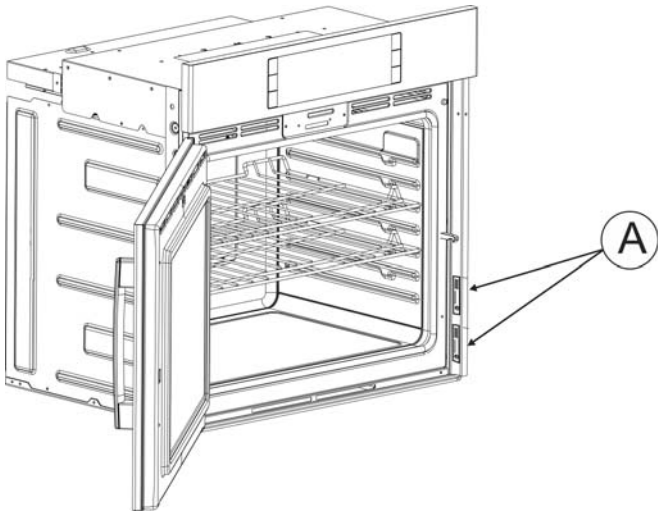

Fours doubles, Charnière latérale

Remarque : Les plaques signalétiques se trouvent à l'opposé de la charnière de porte dans la cavité du four inférieur.

Exigences concernant les dimensions des armoires

Lors de l'installation du four à l'extrémité d'une série d'armoires, en position adjacente par rapport à un mur ou à une porte d'armoire perpendiculaire, il est bon de laisser un espace d'au moins 1/4 de pouce (6 mm) entre le côté du four et le mur ou la porte.

Installer des planches de 2 x 4 po (5,08 x 10,16 cm) qui s'étendent d'avant en arrière et sont de niveau avec le fond et le côté de l'ouverture pour servir de support au four. Cette base de support doit être bien fixée au sol ou à l'armoire et doit être de niveau.

Les boîtes de jonction peuvent se trouver n'importe où à proximité du câble d'alimentation du four.

Dimensions pour les fours simples de 27 po (69 cm)

L'ouverture de l'armoire doit être d'aplomb et le socle doit être à plat et de niveau et capable de supporter un poids d'au moins 193 lb (87 kg).

Installation traditionnelle d'un four simple de 27 po (69 cm), En armoire et Sous comptoir

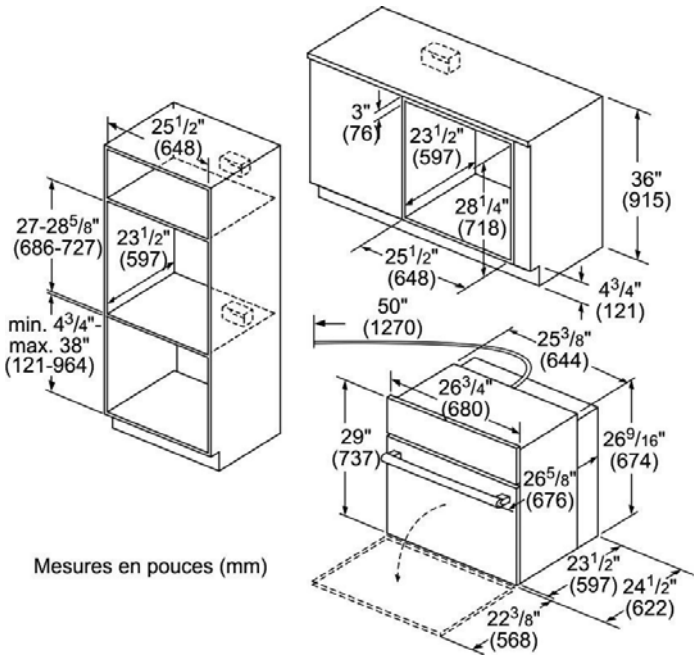

Installation encastrée d'un four simple de 27 po (69 cm)

L'installation encastrée (montage mural et sous comptoir) nécessite deux tasseaux latéraux posés à l'intérieur du cadre de l'armoire ou du plan de travail, en retrait de la face avant.

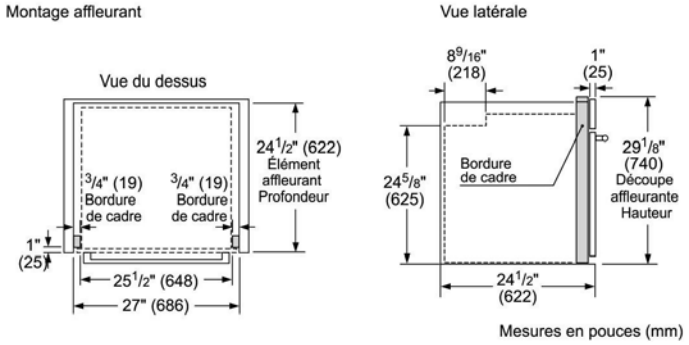

Dimensions pour les fours doubles de 27 po (69 cm)

L'ouverture de l'armoire doit être d'aplomb et le socle doit être à plat et de niveau et capable de supporter un poids d'au moins 361 lb (164 kg).

Installation traditionnelle d'un four double de 27 po (69 cm)

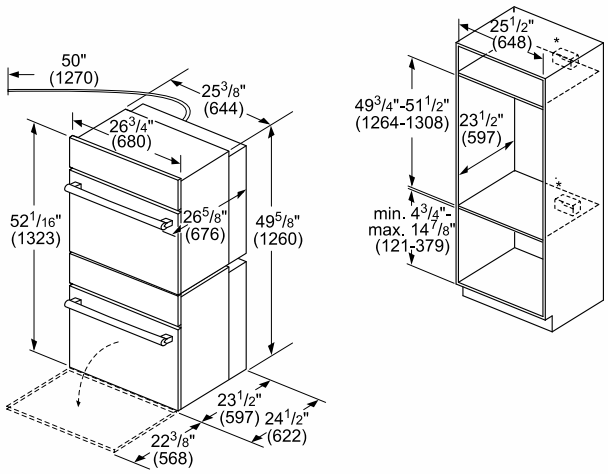

BOSCH

Invented for life

1901 Main Street, Suite 600, Irvine, CA 92614 • 800-944-2904 • www.bosch-home.com
9001065629 • Rev. A • 5V0VYD • 02/15 © BSH Home Appliances Corporation, 2015 • All rights reserved

30" Single Wall Oven

500 Series – Stainless Steel HBL5351UC

BOSCH
Invented for life

HBL5351UC
Stainless Steel

The Bosch wall oven installs flush and features heavy metal stainless steel knobs.

Features & Benefits
Heavy-duty metal knobs offer a premium European feel.
The wall oven is designed to be installed flush with cabinetry.
Bosch wall ovens are compatible with most competitors' cutouts.

General Properties	
Cooking modes	Bake, Variable Broil (hi & low), Roast, Warm, Sabbath
Cleaning type	Self Clean
Telescopic rack	0
Illumination type	Incandescent
Interior lights	1
Oven Performance	
Bake / broil element wattages	2,400 / 3,800 W
Convection element wattages	N/A
Technical Details	
Watts (W)	6,275 W
Circuit breaker (A)	30 A
Volts (V)	240 / 208 V
Frequency (Hz)	60 Hz
Power cord length (in)	50"
Plug type	Fixed Connection, No Plug
Energy source	Electric

Dimensions & Weight	
Overall appliance dimensions (HxWxD) (in)	29" x 29 3/4" x 24 1/2"
Required cutout size (HxWxD) (in)	27" – 28 5/8" x 28 1/2" x 23 1/2"
Oven cavity size (cu. ft.)	4.6
Overall oven interior dimensions (HxWxD) (in)	17 13/16" x 24 1/8" x 18"
Usable oven interior dimensions (HxWxD) (in)	12 5/16" x 23 1/4" x 15 1/4"
Net weight (lbs)	149 lbs
Accessories—Included	
Included	2 Standard Oven Racks

Accessories—Optional

HEZTR301
30" Telescopic Rack

For help and assistance with Bosch accessories please visit: www.bosch-eshop.com/eshop/bosch/us or call 1-800-944-2904 Mon-Fri 5am to 6pm PST Sat 6am to 3pm PST

Notes: All height, width and depth dimensions are shown in inches. BSH reserves the absolute and unrestricted right to change product materials and specifications, at any time, without notice. Consult the product's installation instructions for final dimensional data and other details prior to making cutout. Applicable product warranty can be found in accompanying product literature or you may contact your account manager for further details.

Warranties: Bosch warrants that the Product is free from defects in materials and workmanship for a period of three hundred and sixty-five (365) days from the date of purchase. The foregoing timeline begins to run upon the date of purchase, and shall not be stalled, tolled, extended, or suspended, for any reason whatsoever. This Product is also warranted to be free from cosmetic defects in material and workmanship (such as scratches of stainless steel, paint/porcelain blemishes, chip, dents, or other damage) to the finish of the Product, for a period of thirty (30) days from the date of purchase or closing date for new construction. This cosmetic warranty excludes slight color variations due to inherent differences in painted and porcelain parts, as well as differences caused by kitchen lighting, product location, or other similar factors. This cosmetic warranty specifically excludes any display, floor, "As Is", or "B" stock appliances.

For more information on our entire line of products, go to www.bosch-home.com/us or call 1-800-944-2904

© BSH Home Appliances Corporation. All rights reserved. Bosch is a registered trademark of Robert Bosch GmbH.

30" Single Wall Oven

500 Series – Stainless Steel HBL5351UC

BOSCH
Invented for life

Installation Details

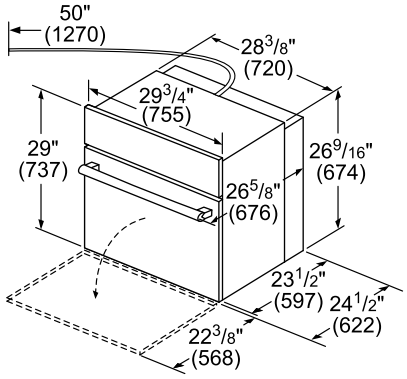

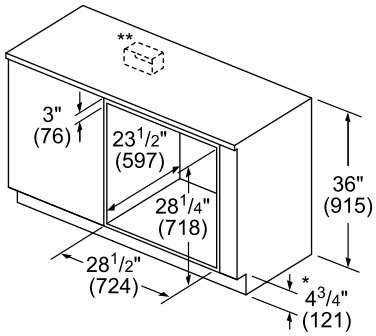

* Includes 3/4" (19) base plate

** For single ovens installed under a countertop, the junction box may be located to the left or right of the unit within reach of the power conduit.

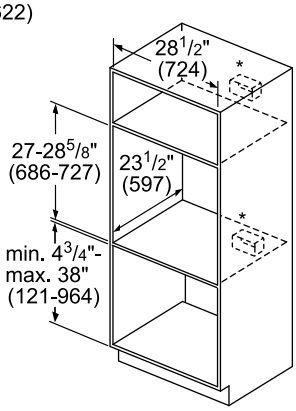

* For single ovens installed into a wall cabinet, the junction box may be located above or beneath the unit within reach of the power conduit.

measurements in inches (mm)

Flush Install

Top View

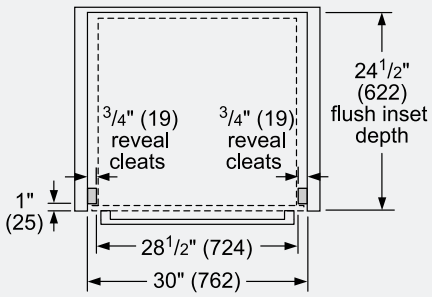

Side View

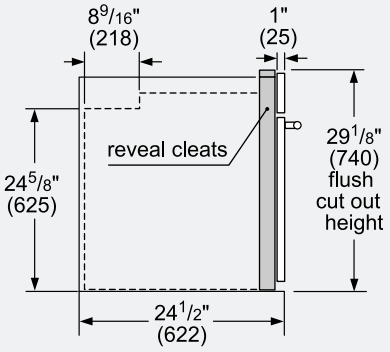

Example Flush Install

Measurements in inches (mm)

For help and assistance with Bosch accessories please visit: www.bosch-eshop.com/eshop/bosch/us or call 1-800-944-2904 Mon-Fri 5am to 6pm PST Sat 6am to 3pm PST

Notes: All height, width and depth dimensions are shown in inches. BSH reserves the absolute and unrestricted right to change product materials and specifications, at any time, without notice. Consult the product's installation instructions for final dimensional data and other details prior to making cutout. Applicable product warranty can be found in accompanying product literature or you may contact your account manager for further details.

Warranties: Bosch warrants that the Product is free from defects in materials and workmanship for a period of three hundred and sixty-five (365) days from the date of purchase. The foregoing timeline begins to run upon the date of purchase, and shall not be stalled, tolled, extended, or suspended, for any reason whatsoever. This Product is also warranted to be free from cosmetic defects in material and workmanship (such as scratches of stainless steel, paint/porcelain blemishes, chip, dents, or other damage) to the finish of the Product, for a period of thirty (30) days from the date of purchase or closing date for new construction. This cosmetic warranty excludes slight color variations due to inherent differences in painted and porcelain parts, as well as differences caused by kitchen lighting, product location, or other similar factors. This cosmetic warranty specifically excludes any display, floor, "As Is", or "B" stock appliances.

For more information on our entire line of products, go to www.bosch-home.com/us or call 1-800-944-2904

© BSH Home Appliances Corporation. All rights reserved. Bosch is a registered trademark of Robert Bosch GmbH.

30" Single Wall Oven

500 Series – Stainless Steel HBL5351UC

BOSCH
Invented for life

Installation Details

Side-by-Side Installation

Standard

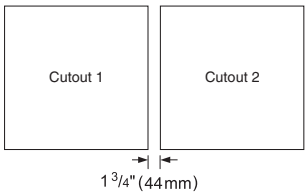

The ovens will overlap the cutout resulting in a 1/2" (13mm) spacing between the products

IMPORTANT: The spacing between cutouts applies when installing any Bosch 30" or 27" single, double, combination and 27"/30" compact oven in a side-by-side installation.

Flush

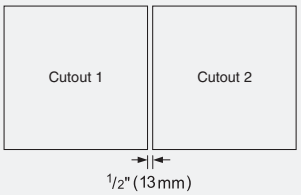

Standard Installation
30" Single Oven over Storage or Warming Drawer

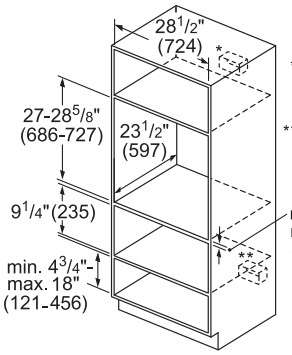

*Wall oven junction box may be located above or right or left of the unit within reach of the power conduit.

**Electrical hook up may be located below (depending on space) or next to the drawer within the reach of the power cord.

minimum 3/4" (18mm) required between cutouts

measurements in inches (mm)

Flush Installation
Single Oven over Storage or Warming Drawer

Side View

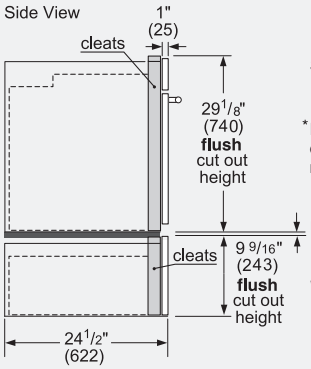

Single Wall Oven

*IMPORTANT: base has to be able to support oven weight. Please check oven manual for minimum weight requirements.

minimum 1/2" (13) required between cutouts*

Warming Drawer

measurements in inches (mm)

Standard Installation
30" Speed Oven over Single Oven***

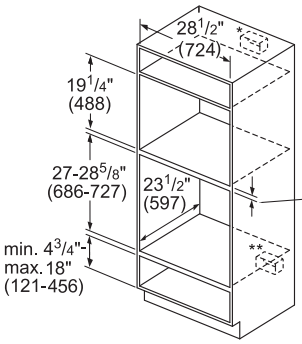

*Junction box may be located above or next to the unit within the reach of the power cord.

**Junction box may be located below (depending on space) or next to the unit within the reach of the power cord.

***Most combinations available as combo oven (one cut out, one electrical hook up).

Minimum dimension between cut outs:

- 1" (25mm) for wall oven cut out height of 28 5/8"
- 2 5/8" (67mm) for wall oven cut out height of 27"

measurements in inches (mm)

Flush Installation
Speed Oven over 30" Single Oven**

Side View

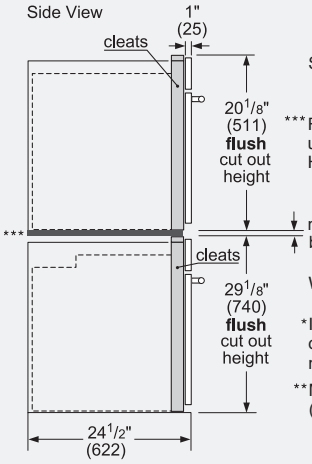

Speed Oven

***Flush installation requires a base plate underneath the body: 30" Products - Dimensions: H 5/16"(8) x W 28 1/2"(724) x D 22 1/2"(571)

minimum 1/2" (13) required between cutouts*

Wall Oven

*IMPORTANT: base has to be able to support oven weight. Please check oven manual for minimum weight requirements.

**Most combinations available as combo oven (one cut out, one electrical hook up).

measurements in inches (mm)

For help and assistance with Bosch accessories please visit: www.bosch-eshop.com/eshop/bosch/us or call 1-800-944-2904 Mon-Fri 5am to 6pm PST Sat 6am to 3pm PST

Notes: All height, width and depth dimensions are shown in inches. BSH reserves the absolute and unrestricted right to change product materials and specifications, at any time, without notice. Consult the product's installation instructions for final dimensional data and other details prior to making cutout. Applicable product warranty can be found in accompanying product literature or you may contact your account manager for further details.

Warranties: Bosch warrants that the Product is free from defects in materials and workmanship for a period of three hundred and sixty-five (365) days from the date of purchase. The foregoing timeline begins to run upon the date of purchase, and shall not be stalled, tolled, extended, or suspended, for any reason whatsoever. This Product is also warranted to be free from cosmetic defects in material and workmanship (such as scratches of stainless steel, paint/porcelain blemishes, chip, dents, or other damage) to the finish of the Product, for a period of thirty (30) days from the date of purchase or closing date for new construction. This cosmetic warranty excludes slight color variations due to inherent differences in painted and porcelain parts, as well as differences caused by kitchen lighting, product location, or other similar factors. This cosmetic warranty specifically excludes any display, floor, "As Is", or "B" stock appliances.

For more information on our entire line of products, go to www.bosch-home.com/us or call 1-800-944-2904

© BSH Home Appliances Corporation. All rights reserved. Bosch is a registered trademark of Robert Bosch GmbH.

INSTALLATION INSTRUCTIONS
Model: DHDRM36UC

BOSCH

YOUR LIFE. OUR INSPIRATION.

INSTALLATION

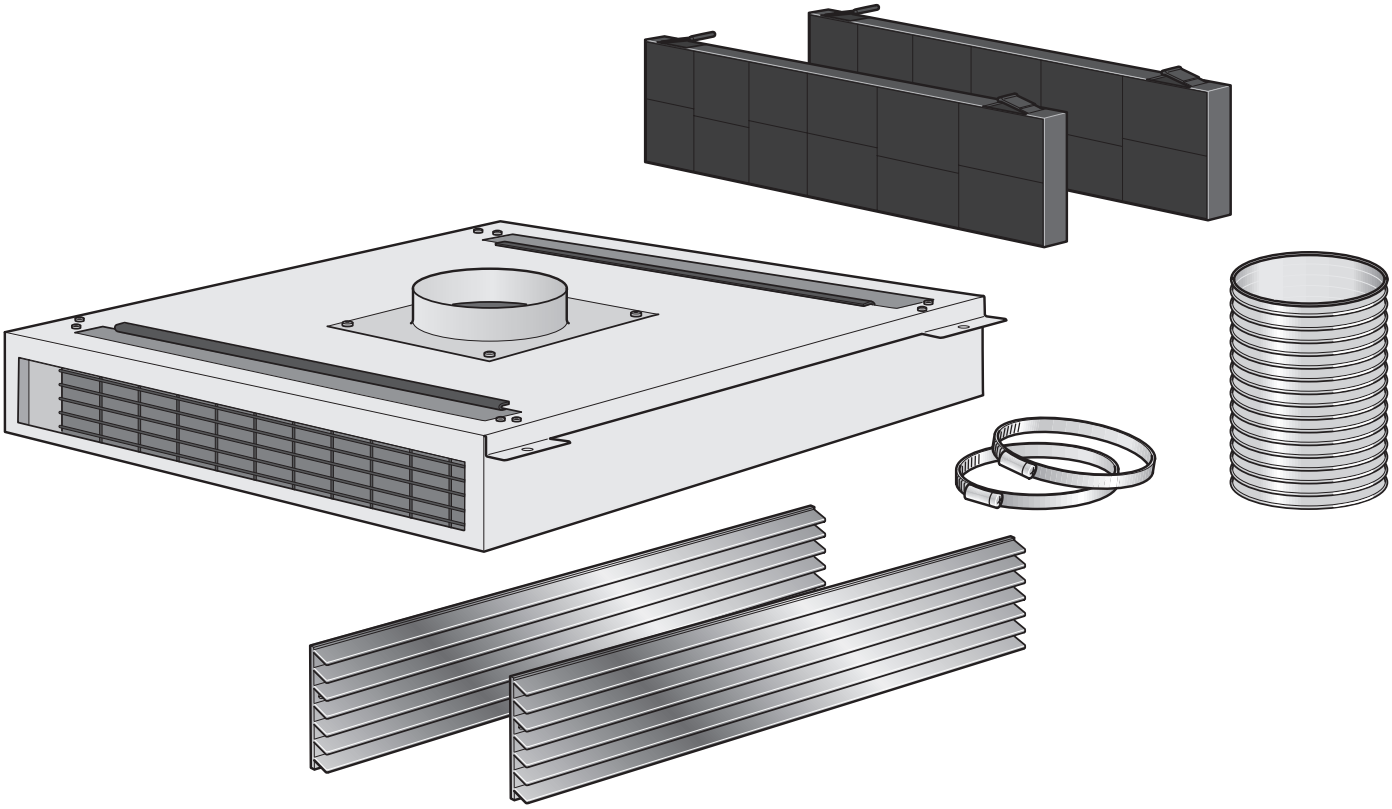

1.

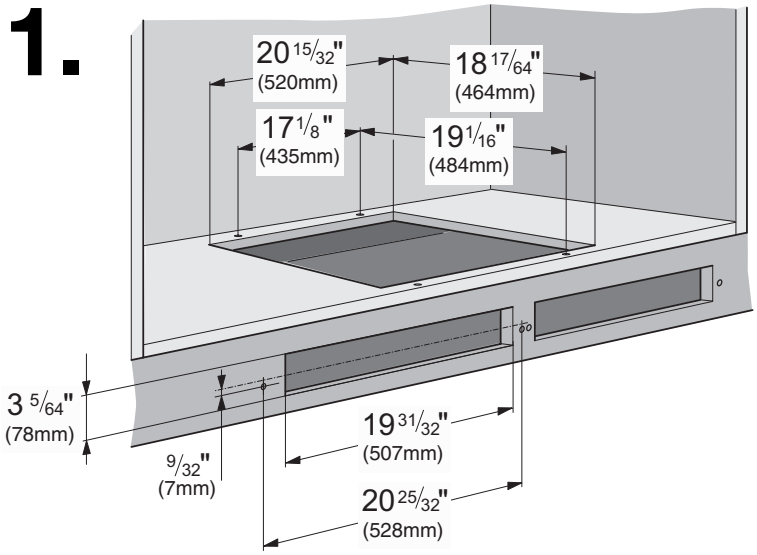

2.

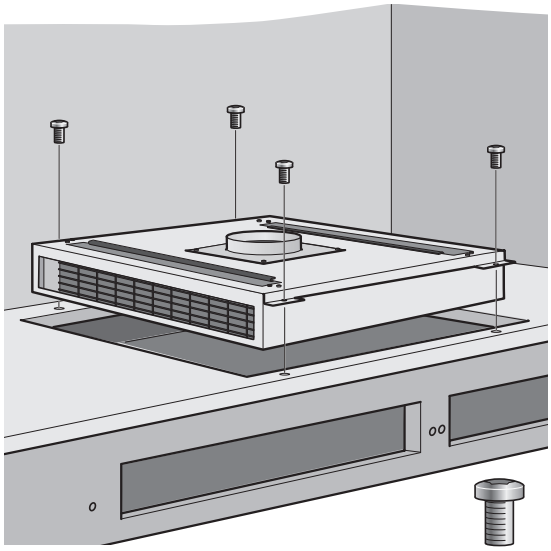

3.

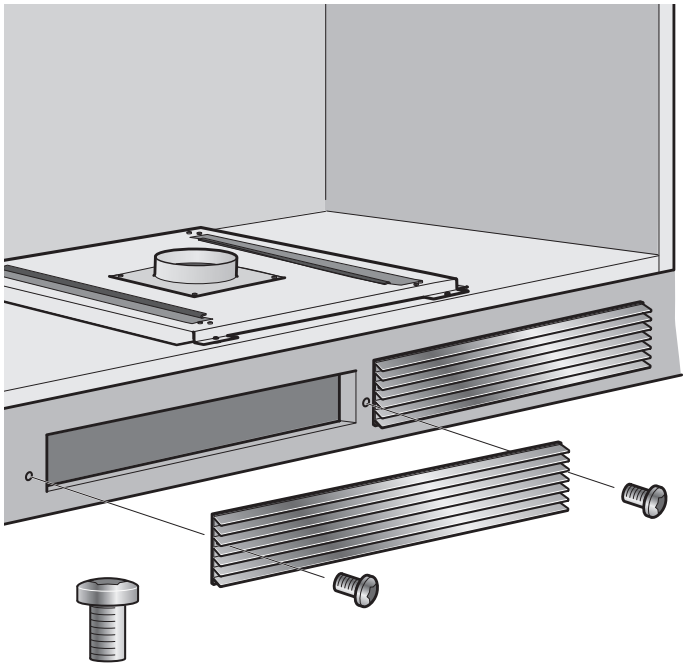

4.

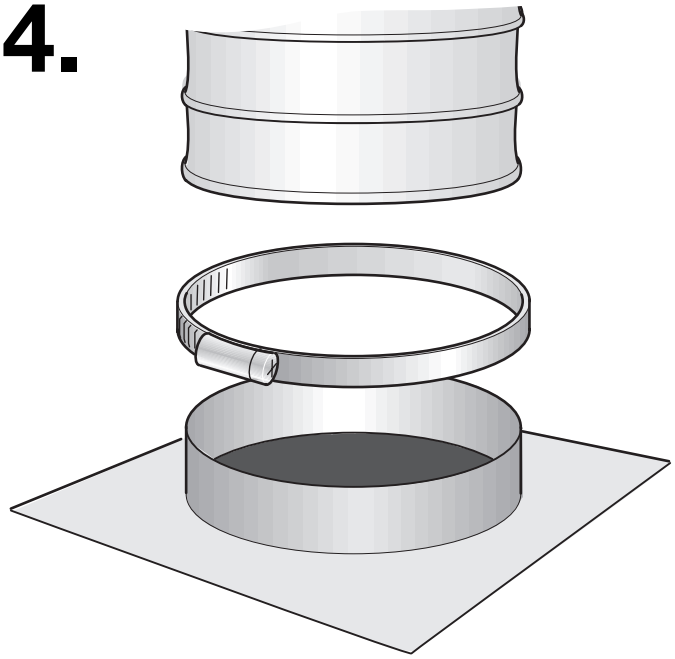

5.

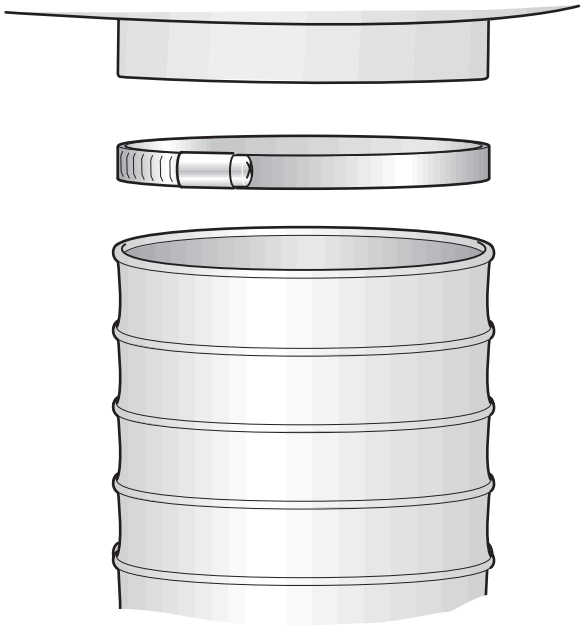

6.

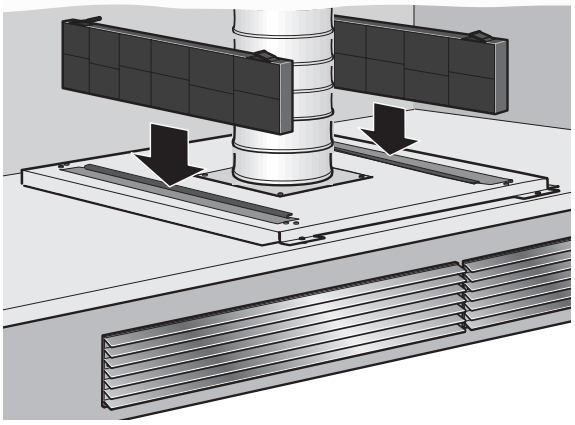

BOSCH

YOUR LIFE. OUR INSPIRATION.

5551 McFadden Avenue, Huntington Beach, CA 92649 • 1-800-944-2904 • www.boschappliances.com
9000343507 • 10019 Rev B • 05/08 © BSH Home Appliances Corporation 2005 • Litho U.S.A.

DHDRM36UC
Downdraft Recirculation Module

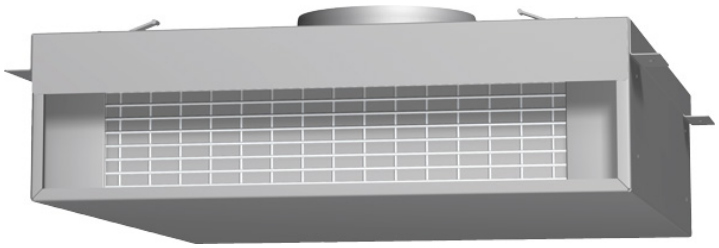

Features and Benefits

- One size fits 30" and 36" Bosch Downdrafts
- Recirculation module works in Wall or Island applications
- Ideal for difficult-to-duct situations
- Fits in toe-kick/socket heights of 4" or taller
- Mounts to cabinet base, recesses into toe-kick/socket area
- Toe-kick/socket space can be vented in any direction

Notes: All height, width and depth dimensions are shown in inches. *Please refer to installation instructions prior to making cutout. BSH reserves the absolute and unrestricted right to change product materials and specifications, at any time, without notice.Consult the product's installation instructions for final dimensional data and other details. Applicable product warranty can be foundin a ccompanying product literature or you may contact your account manager for further details.

For more information on our entire line of products, go to boschappliances.com or call 1-800-944-2904.

Copyright ©2009 BSH Home Appliances Corporation. All rights reserved. Bosch is a registered trademark of Robert Bosch GmbH.

Litho Date: 10/2009

DHDRM36UC
Downdraft Recirculation Module

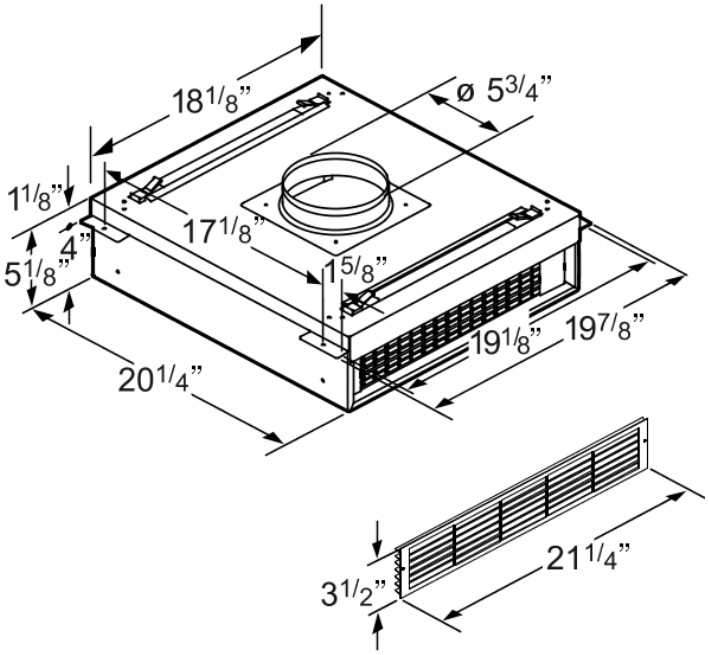

Measurements in inches

Features

Technical Specification

Notes: All height, width and depth dimensions are shown in inches. *Please refer to installation instructions prior to making cutout. BSH reserves the absolute and unrestricted right to change product materials and specifications, at any time, without notice.Consult the product’s installation instructions for final dimensional data and other details. Applicable product warranty can be foundin a ccompanying product literature or you may contact your account manager for further details.

For more information on our entire line of products, go to boschappliances.com or call 1-800-944-2904.

Copyright ©2009 BSH Home Appliances Corporation. All rights reserved. Bosch is a registered trademark of Robert Bosch GmbH.

Litho Date: 10/2009

600 CFM Internal Blower

Downdraft Ventilation - DHG601DUC

BOSCH
Invented for life

DHG601DUC

600 CFM internal blower.

Features & Benefits
For use with Bosch downdrafts.
Internal blowers are installed under the countertop with the downdraft.

General Properties	
Operating mode	Ducted
Maximum CFM	600 CFM
Number of speed settings	3-stage
Motor location	Integrated motor in hood body

Technical Details	
Watts (W)	530 W
Volts (V)	120 V
Frequency (Hz)	60 Hz
Plug type	No plug
Power cord length (in.)	30"

Dimensions & Weight	
Overall appliance dimensions (width of canopy included) (HxWxD) (in.)	15 1/8" / x 14 3/8" x 6 3/4"
Diameter of air duct (in.) top	6"
Diameter of air duct (in.) back	10"
Net weight (lbs)	10 lbs

For help and assistance with Bosch accessories please visit: www.bosch-eshop.com/eshop/bosch/us or call 1-800-944-2904 Mon-Fri 5am to 6pm PST Sat 6am to 3pm PST

Notes: All height, width and depth dimensions are shown in inches. Please refer to installation instructions prior to making cutout. BSH reserves the absolute and unrestricted right to change product materials and specifications, at any time, without notice. Consult the product's installation instructions for final dimensional data and other details. Applicable product warranty can be found in accompanying product literature or you may contact your account manager for further details.

Warranties: Bosch warrants that the Product is free from defects in materials and workmanship for a period of three hundred and sixty-five (365) days from the date of purchase. The foregoing timeline begins to run upon the date of purchase, and shall not be stalled, tolled, extended, or suspended, for any reason whatsoever. This Product is also warranted to be free from cosmetic defects in material and workmanship (such as scratches of stainless steel, paint/porcelain blemishes, chip, dents, or other damage to the finish of the Product, for a period of thirty (30) days from the date of purchase or closing date for new construction. This cosmetic warranty excludes slight color variations due to inherent differences in painted and porcelain parts, as well as differences caused by kitchen lighting, product location, or other similar factors. This cosmetic warranty specifically excludes any display, floor, "As Is", or "B" stock appliances.

For more information on our entire line of products, go to www.bosch-home.com/us or call 1-800-944-2904

© BSH Home Appliances Corporation. All rights reserved. Bosch is a registered trademark of Robert Bosch GmbH.

600 CFM Internal Blower

Downdraft Ventilation - DHG601DUC

BOSCH
Invented for life

Installation Details

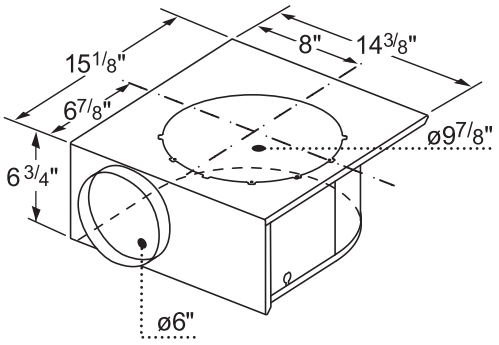

Measurement in inches

For help and assistance with Bosch accessories please visit: www.bosch-eshop.com/eshop/bosch/us or call 1-800-944-2904 Mon-Fri 5am to 6pm PST Sat 6am to 3pm PST

Notes: All height, width and depth dimensions are shown in inches. Please refer to installation instructions prior to making cutout. BSH reserves the absolute and unrestricted right to change product materials and specifications, at any time, without notice. Consult the product's installation instructions for final dimensional data and other details. Applicable product warranty can be found in accompanying product literature or you may contact your account manager for further details.

Warranties: Bosch warrants that the Product is free from defects in materials and workmanship for a period of three hundred and sixty-five (365) days from the date of purchase. The foregoing timeline begins to run upon the date of purchase, and shall not be stalled, tolled, extended, or suspended, for any reason whatsoever. This Product is also warranted to be free from cosmetic defects in material and workmanship (such as scratches of stainless steel, paint/porcelain blemishes, chip, dents, or other damage to the finish of the Product, for a period of thirty (30) days from the date of purchase or closing date for new construction. This cosmetic warranty excludes slight color variations due to inherent differences in painted and porcelain parts, as well as differences caused by kitchen lighting, product location, or other similar factors. This cosmetic warranty specifically excludes any display, floor, "As Is", or "B" stock appliances.

For more information on our entire line of products, go to www.bosch-home.com/us or call 1-800-944-2904

© BSH Home Appliances Corporation. All rights reserved. Bosch is a registered trademark of Robert Bosch GmbH.

DOWNDRAFT INSTALLATION INSTRUCTIONS

DHD Models

BOSCH

YOUR LIFE. OUR INSPIRATION.

en page 3 – 16

fr page 17 – 30

es página 31 – 44

⚠ SAFETY INSTRUCTIONS

READ ALL INSTRUCTIONS BEFORE USING THE APPLIANCE.

READ AND SAVE THESE INSTRUCTIONS

⚠ WARNING

To reduced the risk of fire, electric shock, or injury to persons, observe the following:

A. Installation work and electrical wiring must be done by authorized person(s) in accordance with all applicable codes and standards, including fire-related construction.

B. Sufficient air is needed for proper combustion and exhausting of gases through the flue (chimney) of fuel burning equipment to prevent backdrafting. Follow the heating equipment manufacturer's guideline and safety standards such as those published by the National Fired Protection Association (NFPA), and the American Society for Heating, Refrigeration and Air Conditioning Engineers (ASHRAE), and the local code authorities.

C. When cutting or drilling into wall or ceiling, do not damage electrical wiring and other hidden utilities.

D. Ducted fans must always be vented to the outdoors.

E. Always unplug or disconnect the appliance from the power supply before servicing.

F. This unit is designed for indoor use only. Use this unit only in the manner intended by the manufacturer.

G. Make certain the cooktop is appropriate for use with a downdraft vent.

H. Not intended for use with professional-style cooktops.

⚠ WARNING

For general ventilating use only. Do not use to exhaust hazardous or explosive materials and vapors.

To reduce risk of fire and to properly exhaust air, be sure to duct air outside. Do not vent exhaust air into spaces within walls, ceilings, attics, crawl spaces or garages.

To reduced the risk of fire, use only metal duct work.

To reduce the risk of fire, electric shock and injury to persons, Downdraft must be used with Internal, Remote or Inline Blower.

To reduce the risk of fire or electric shock, do not use the fan with any solid-state speed control device.

This appliance has been found to be in compliance with UL 507 Standard for Electric Fans and CAN/CSA-22.2 No. 113 Canadian Standard for Fans and Ventilators. It is the responsibility of the owner and the installer to determine if additional requirements or standard apply in specific installation.

Parts Needed (standard)

- Tape Measure
- Phillips Head Screwdriver
- Aluminum Duct Tape
- Ductwork (configuration varies depending on location; See pages 7-12 for further information)
- Additional Sheetmetal screws (as necessary for ductwork installation)
- Saw (or equivalent for cutting countertop)
- #8 x 1 1/4” Wood Screws (4)
- Plumb Bob
- Wire to reach Remote or Inline Blower

Parts Needed (special)

- Special Blower
- Transition Box (for use only with Inline and Remote Blowers)
- Recirculation Module (used only for recirculation applications)

Note: Downdrafts work with these blowers: 600 CFM Integrated, Remote or Inline Blowers 1000 CFM Remote or Inline Blowers

Parts Supplied

- Downdraft assembly (1)
- #8 Sheetmetal Screws (8)
- Blower Cord Strain Relief (1)
- Hardware for brackets on vent (2)
- Remote Blower Pigtail

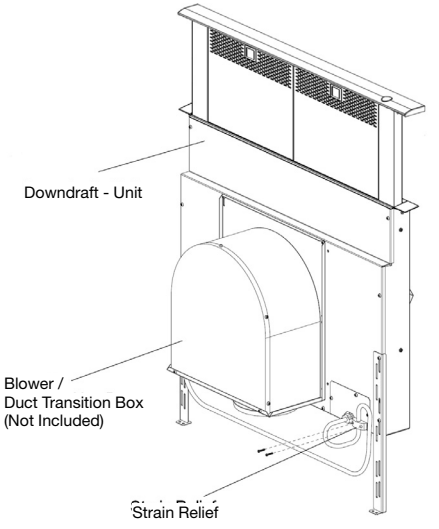

Fig. 1

INTRODUCTION

GENERAL DESCRIPTION

The complete downdraft system consists of the downdraft, a blower and a transition box if using an Inline or Remote Blower. A recirculation module is also available when ducting to the outside is not preferred or not possible. (See Fig. 1).
The blower can be either integral (mounted on the vent intake in the cabinet under the cooktop), an inline (mounted between the kitchen and exterior wall anywhere within the duct line), or a remote (mounted on the roof or outside wall). When a remote or inline blower is used, a duct transition is mounted on the ventilator intake in place of the integral blower to connect the intake to the duct work. The duct transition must be purchased separately.

The integral blower or duct transition can be mounted in different positions on the intake to route ductwork to avoid cabinet, building framing, utilities, etc.

The downdraft system is available in 30-inch or 36- inch. Intended for non-professional style cooktops only.

A Recirculation Kit can be purchased separately and used in conjunction with the Integral Blower if ducting to the outside is not a viable option.

Step 1: Plan the installation

Carefully follow the planning procedures listed below (See Figure 2). Sketches are NOT intended to be a replacement for careful planning.

A. Determine whether a remote, inline, or integral blower will be used. **Remote and inline blower installation requires 4 wires plus a ground wire to run from the downdraft to the blower.**

B. Make sure that adequate cabinet and counter space has been provided and that the intake and blower will be accessible if service is required.

C. Consider that cross drafts created by adjacent open windows, doors, air conditioning, old heating vents, recessed ceiling lights, and traffic patterns may affect performance.

D. For gas cooktop installations make sure that a minimum 10 square inch opening is provided in the toe-kick or other cabinet area. Inadequate ventilation of the cabinet below the cooktop may result in flame outage when operating the vent system.

E. Provide for air supply or ”make-up air” to the room where unit will be installed. If ”make-up air” is not provided, then problems, such as fireplace chimney downdrafts, could result.

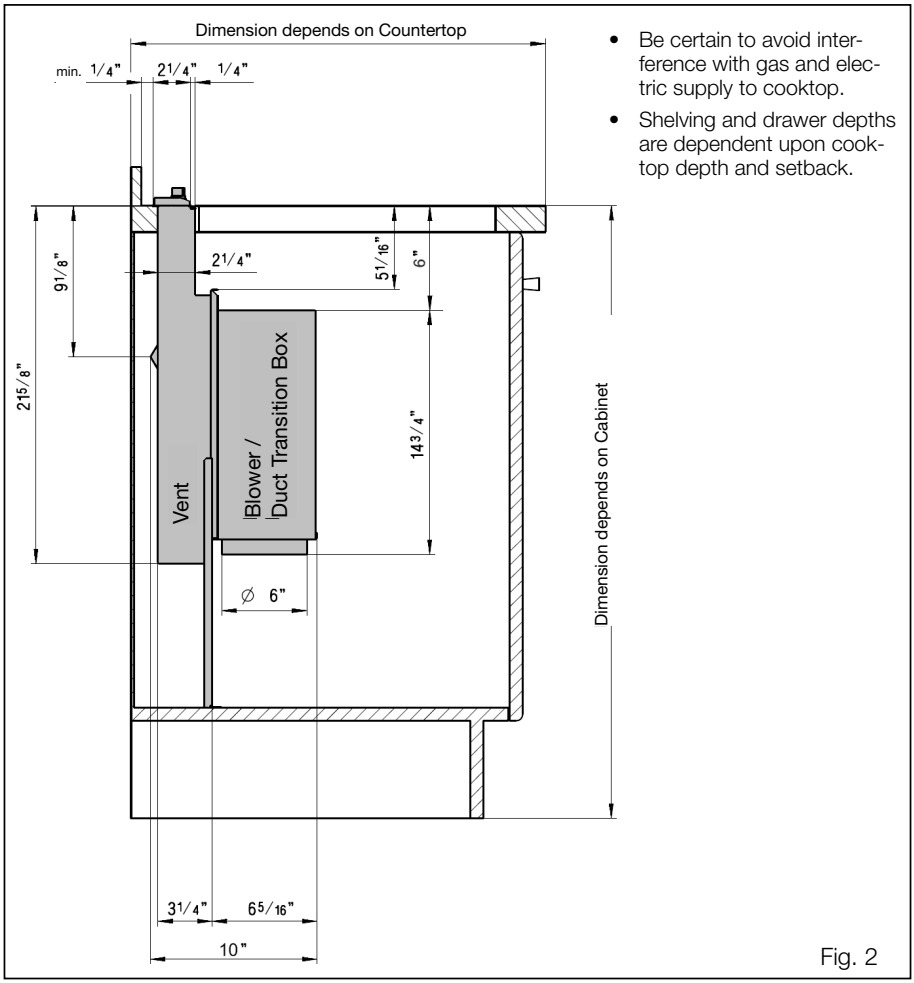

- Be certain to avoid interference with gas and electric supply to cooktop.
- Shelving and drawer depths are dependent upon cooktop depth and setback.

Fig. 2

F. Investigate potential ductwork routes and choose the shortest possible route from the unit to an outside wall or to the roof via an inside wall and attic. For guidance, typical ducting installations are shown in figures 3 through 6. Installation in island locations will require under floor ducting. Peninsula locations usually require ducting laterally through cabinets or under cabinet toe spaces. Consider potential interferences to ductwork from building framing (floor joists, wall studs, etc.) and utilities (electrical wiring, water, gas, or sewer lines, etc).

G. Purchase the necessary ductwork as needed to duct to the outside or purchase separately the downdraft Recirculation Module if ducting to the outside is not a viable option.

Figures 3 through 6 are examples of possible ducting

Remote Blower
Roof Mount Installation
Through wall installation

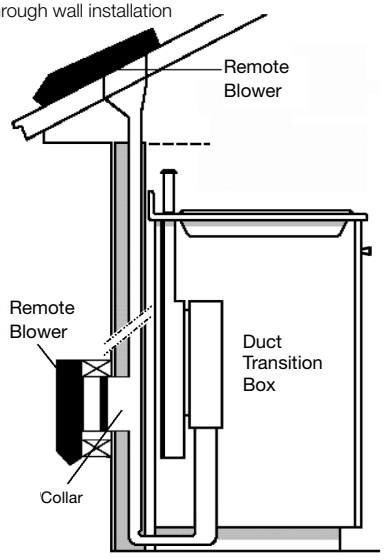

Fig. 3

Integral Blower
Through Wall Installation

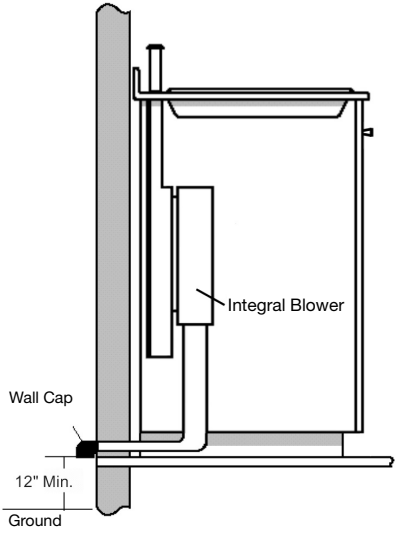

Fig. 4

Integral Blower
Through Wall Installation

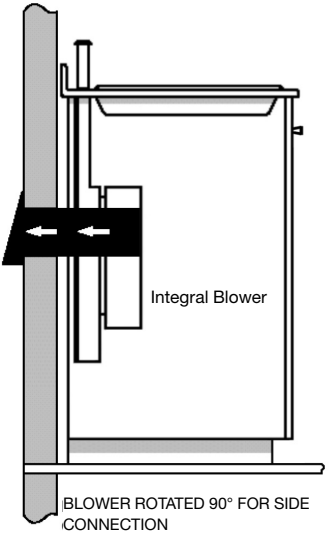

Fig. 5

Inline Blower
Through Wall Installations

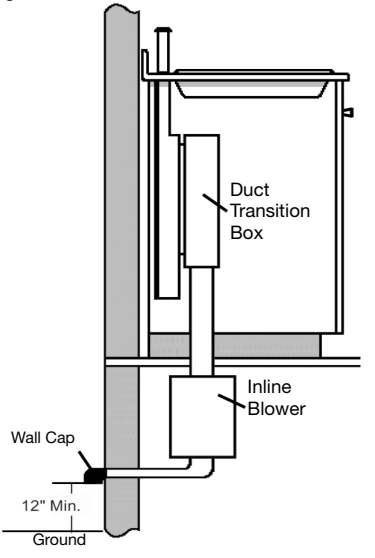

Fig. 6

DUCTWORK INSTALLATION GUIDELINES

- Ducting should vent directly outdoors (not into an attic, underneath the house, into the garage or into any enclosed space). A Recirculation Module is available when ducting to the outside is not possible.
- Keep duct runs as short and straight as possible.
- Duct fittings (elbows and transitions) reduce air flow efficiency.
- Back to back elbows and ”S” turns give very poor delivery and are not recommended.
- A short straight length of duct at the inlet of the remote blower gives the best delivery.
- Transition to duct from the integral blower or remote duct transition as close to the downdraft as is possible. In order of preference, use

  1st. 10” round duct

  2nd. 8” round duct

  3rd. 3-1/4” x 14” duct

  4th. 7” round duct

  5th. 3-1/4” x 10” duct

  6th. 6” round duct
- The use of flexible metal round duct should only be used when no other duct fitting exists. Limit use to short lengths and do not crush when making corners.
- Back to back elbows should be avoided.
- Where local codes permit, plastic pipe (PVC-schedule 40 pipe or ABS pipe 7” or 8” diameter) can be used in areas of high ground moisture and in slab floors to eliminate future rusting.
- Use only duct work constructed of materials that are acceptable by the applicable codes. All duct should be 26 gauge or heavier to minimize flex due to air flow.
- The remote blowers require a 10” or 6” diameter round duct (depending on model) to match the inlet ring. A transition is necessary from other duct sizes.
- Use sheet metal screws as required to support the duct weight, and seal all joints with duct tape.
- Be certain that the duct work does not interfere with floor joists or wall studs.
- Do not exhaust more than one vent into a single duct run.
- Cold weather installations should have an additional backdraft damper installed to minimize backward cold air flow and a nonmetallic thermal break to minimize conduction of outside temperatures as part of the ductwork. The damper should be on the cold air side of the thermal break. The break should be as close as possible to where the ducting enters the heated portion of the house.
- Always use an appropriate roof or wall-cap with damper. Laundry type wall caps should never be used.

Step 2: Prepare Countertop Cutout

Refer to the cooktop installation instructions for dimensions of cooktop, countertop cut-out, and cabinet requirements prior to making any cutouts. Cooktop depth and countertop back-splash depth can vary greatly from one to another. These variations may cause the fit of the downdraft and cooktop to be tight. A countertop (front edge) with a raised lip and/or a wide backsplash (back edge) may not allow enough flat countertop for a proper installation.

- ☐ Check that the cooktop is far enough forward that the downdraft will fit behind it. Verify all dimensions prior to cutting the countertops.

Use the physical products to confirm cutouts whenever possible.

For all installations verify that all cutouts will clear the inside of the front countertop support rail, and that the cooktop and vent will be centered left to right within the cutout. Also, make certain that the front

and rear cutouts are straight and parallel to the front edge of countertop and the rear backsplash and/or wall. Assure that the side cutouts are square to the front and rear cutouts.

All illustrations and dimensions are based on standard 24” deep by 36” high American style base cabinets with 25” countertops.

When installing laminated or solid surface countertops such as Surell™ and Corian®, be sure to follow the countertop manufacturer’s instructions regarding minimum comer radii, reinforcement of corners, etc.

Note: Check boxes as tasks are completed.

For overhead cabinet and cooktop side clearances consult cooktop Installation Instructions.

INSTALLATION WITH COOKTOPS

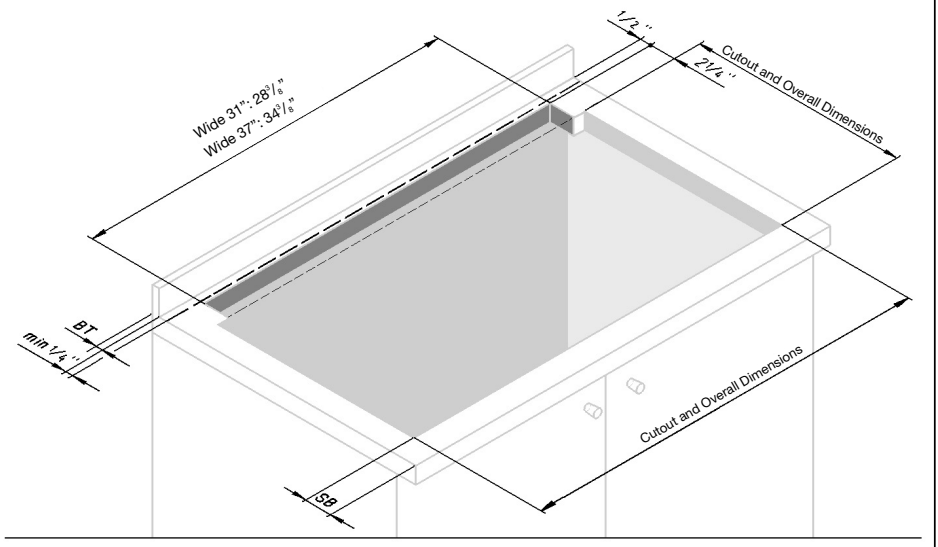

Fig. 7

Notes

Dimension **"SB"** is the minimum distance from the leading edge of the counter to the leading edge of the cutout.

Dimension **"BT"** is the thickness of backsplash that provides 1/4" clearance between vent and backsplash. Any backsplash with a curved radius where it meets the counter will require additional clearance. Thicker backsplashes may be used by increasing the counter and cabinet depths.

Set the cooktop into the countertop opening so that the back edge of the cooktop overlaps the leading edge of the downdraft.

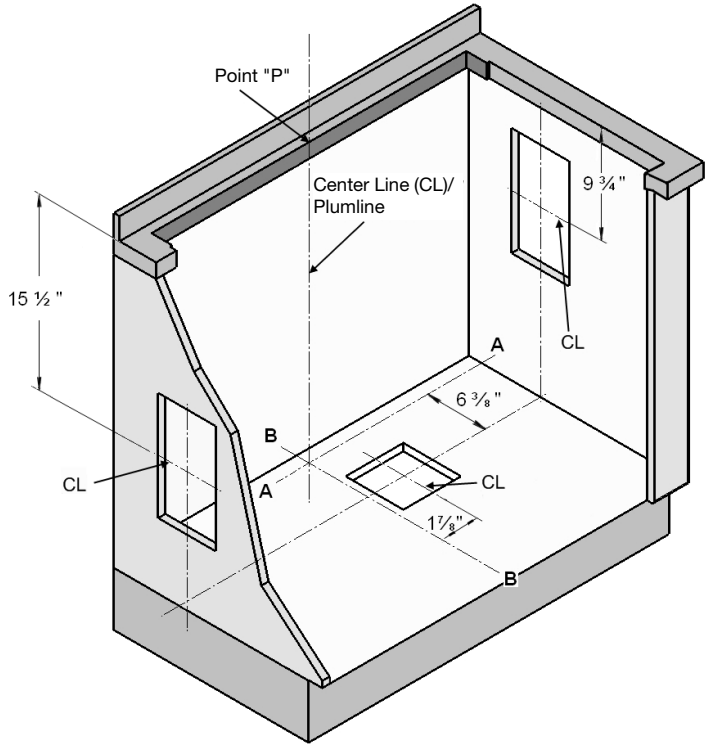

Fig. 8

Step 3: Prepare Duct Cutouts in Cabinet

- ☐ A. Refer to Figure 8. Drop a plumb-line from Point "P" at the rear center of the countertop cutout. Mark this point on the bottom of the cabinet below. Construct two reference lines through this point: one should be parallel to the cabinet front and directly below the rear countertop cutout (Line A-A), and the other (Line B-B) should be at right angles to A-A.
- ☐ B. Using these reference lines as a base for the measurements, layout the necessary cabinet cutouts needed to implement the planned ductwork route. Where a range of measurements is noted, choose a measurement that allows best clearance from wall studs, floor joists, utilities, or other obstructions.
- ☐ C. Before cutting for ducting, temporarily set intake and cooktop in place and attach integral blower (or duct transition fitting if a remote or inline blower is installed). Refer to steps 6 and 7. Verify that the duct cutouts as marked will match the hardware installation. Adjust the duct cutout as necessary to match hardware installation.
- ☐ D. Remove temporarily placed hardware and make cutouts in cabinet to accommodate ductwork installation.
- ☐ E. Make all other cabinet modifications needed to provide proper clearances for drawers or removable shelving.

Note: Check boxes as tasks are completed.

Step 4: Install Ductwork (Remote or Inline Blower, If Used)

- ☐ A. Install the ductwork and remote blower (if used) in accordance with the ductwork routing plan developed in Step 1.
- ☐ B. Make sure that the installation complies with all installations guidelines. Type and length of ducting and lack of make-up air may reduce CFM. Also check that the opening where duct passes through outside wall or roof has been properly flashed and sealed to prevent leakage.
- ☐ C. If using Integral Blower, proceed to Step 5.
- ☐ D. If using Remote or Inline Blower, refer to Installation Instructions with that model.

Step 5: Install Electrical Service

- ☐ Check your local building codes for proper method of installation. In the U.S., if there are no applicable local codes, this unit should be installed in accordance with the National Electric Code ANSI/NFPA No. 70, Current Issue. (In Canada, installation must be in accordance with the CAN 1-B149.1 and .2-Installation Codes for Gas Burning Appliances and/or local codes).
- ☐ The appliance must be grounded. In the event of an electrical short circuit, grounding reduces the risk of electric shock by providing an escape wire for the electric current. This appliance is equipped with a cord having a grounding wire with a grounding plug. The plug must be plugged into an outlet that is properly installed and grounded.

⚠ WARNING – Improper grounding can result in a risk of electric shock.

Only a qualified electrician, or similarly qualified persons, should make the electrical connections.

Do not use an extension cord. If the power supply cord is too short, have a qualified electrician install an outlet near the appliance.

The receptacle should be located under the countertop so that the 30 inch long power cord from the vent will reach it. See Figure 8.

- ☐ The cord should be routed beneath the appliance and away from heat generated by the cooktop. Access should not be obstructed by blower, cabinet work, ductwork or electrical/gas utilities for the cooktop. All power for the vent system (including the remote blower, if used) is supplied via the cord to the intake unit. The outlet can usually be extended from another kitchen outlet or have its own circuit from the main service panel.

  Do not plug vent cord into receptacle until Step 8.

Step 6: Mount Vent and Cooktop

- ☐ A. Remove grease filters and any packing materials from inside the intake.
- ☐ B. Set the vent intake into rear of countertop opening. Carefully lower it into position so that the flanges on the rear sides and edges fully support the unit hanging from the countertop.
- ☐ C. Hold the unit against the rear of the countertop opening, and slide the leg brackets down to meet the bottom of cabinet. Check and adjust for plumb, then fasten leg brackets to cabinet with hardware provided.

Note: Check boxes as tasks are completed.

Step 7: Mount Integral Blower or Outlet Duct Transition for Remote or Inline Blower

Integral Blower (see Figures 9 and 11 for further detail):

- ☐ A. Attach blower in front of round exhaust outlet with 4-6 (depending on configuration) #8 sheetmetal screws.
- ☐ B. Feed cord **from blower** through strain relief.
- ☐ C. Secure strain relief with screws.
- ☐ D. Attach strain relief to downdraft near junction box.
- ☐ E. Connect cord to downdraft at 6 pin connector.
- ☐ F. Connect blower to ductwork.
- ☐ G. Place the cooktop in countertop opening with the rear edge of cooktop overlapping the front edge of the vent. Make sure rear edge of cooktop does not bind against front of snorkel. Follow the manufacturer's installation Instructions for installing gasket strips, protective heat tape (if required), securing the cooktop to the countertop and making the cooktop electrical and/or gas connections.

Note: Check boxes as tasks are completed.

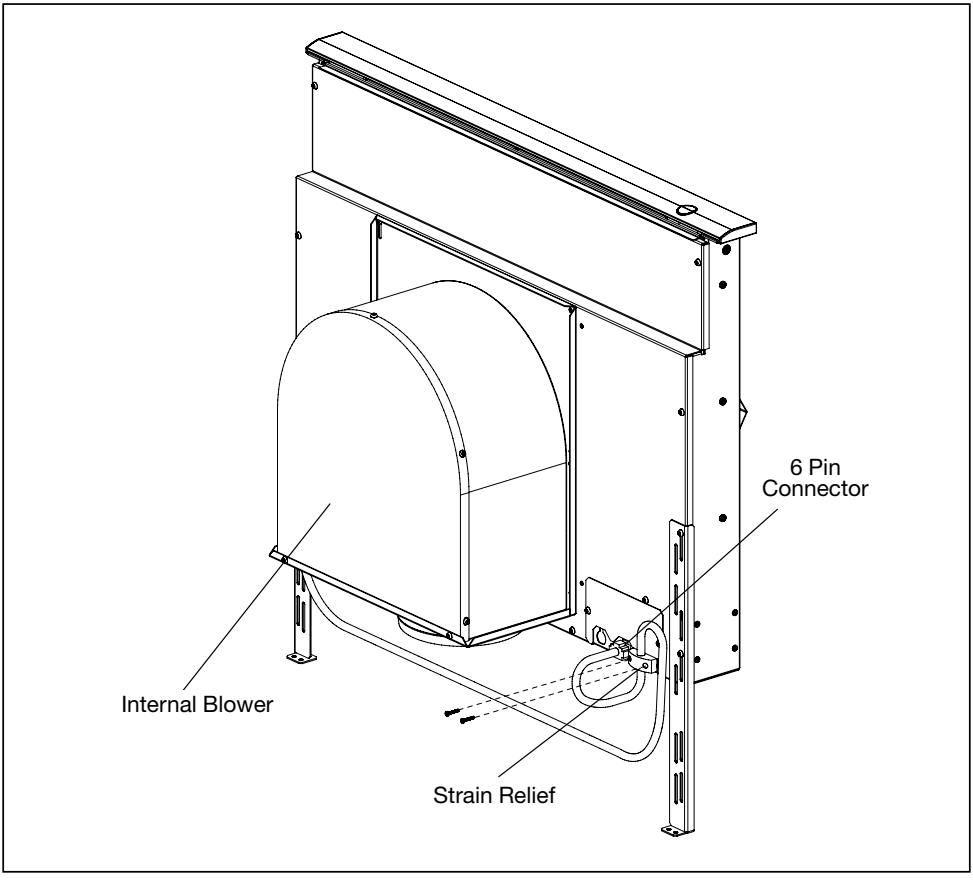

Fig. 9 – Internal Blower

Remote or Inline Blower (see Figures 10 and 11 for further detail):

- ☐ A. Remove junction box cover and connect conduit with 5 wires from remote blower. Hook up wires per Wiring.Fig. 10. Replace junction box cover.
- ☐ B. Attach Duct Transition Box at mounting holes with sheetmetal screws.
- ☐ C. Feed remote blower pigtail through strain relief.
- ☐ D. Attach strain relief to downdraft near junction box.
- ☐ E. Connect pigtail to downdraft at 6 pin connector.
- ☐ F. Run pigtail wires to junction box.
- ☐ G. Inside junction box, connect conduit with five wires from remote or inline blower. Use a conduit connector to secure.

Note: Blower and duct transition box may be installed with duct outlet left, down or right. Install blower or duct transition in such a way that access panels can be removed for service.

- ☐ H. Place the cooktop in countertop opening with the rear edge of cooktop overlapping the front edge of the vent. Make sure rear edge of cooktop does not bind against front of snorkel.
  Follow the manufacturer's installation Instructions for installing gasket strips, protective heat tape (if required), securing the cooktop to the countertop and making the cooktop electrical and/or gas connections.

Note: Check boxes as tasks are completed.

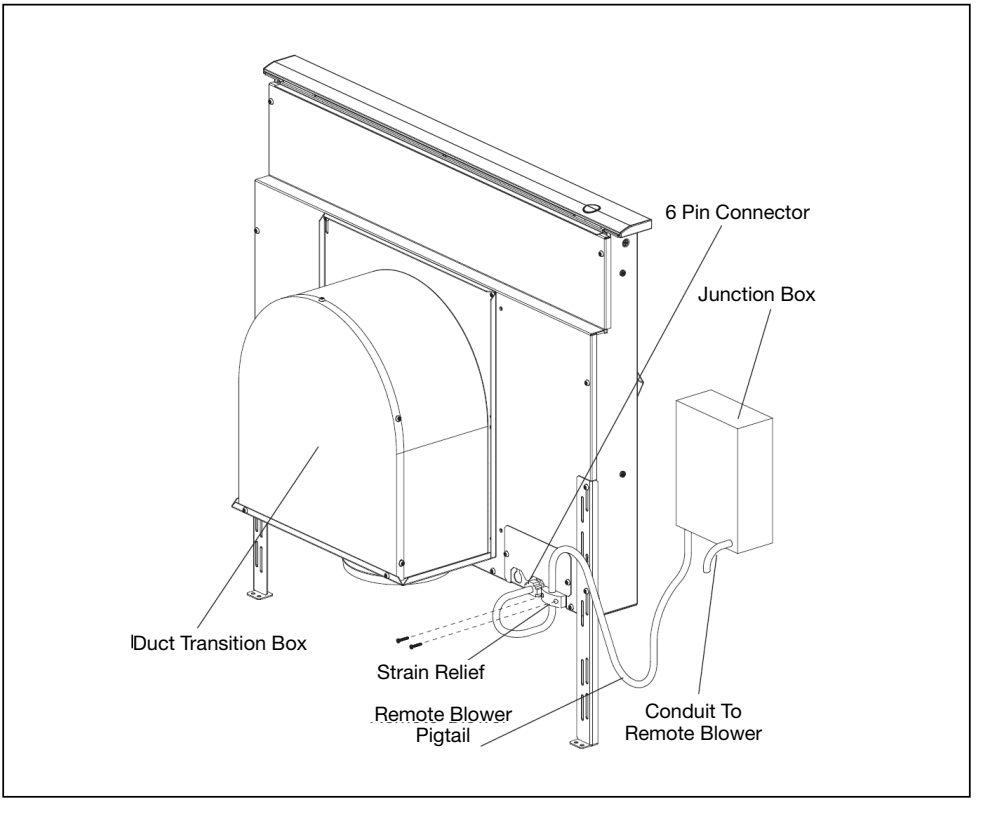

Fig. 10 – Remote Blower

Wiring Diagram

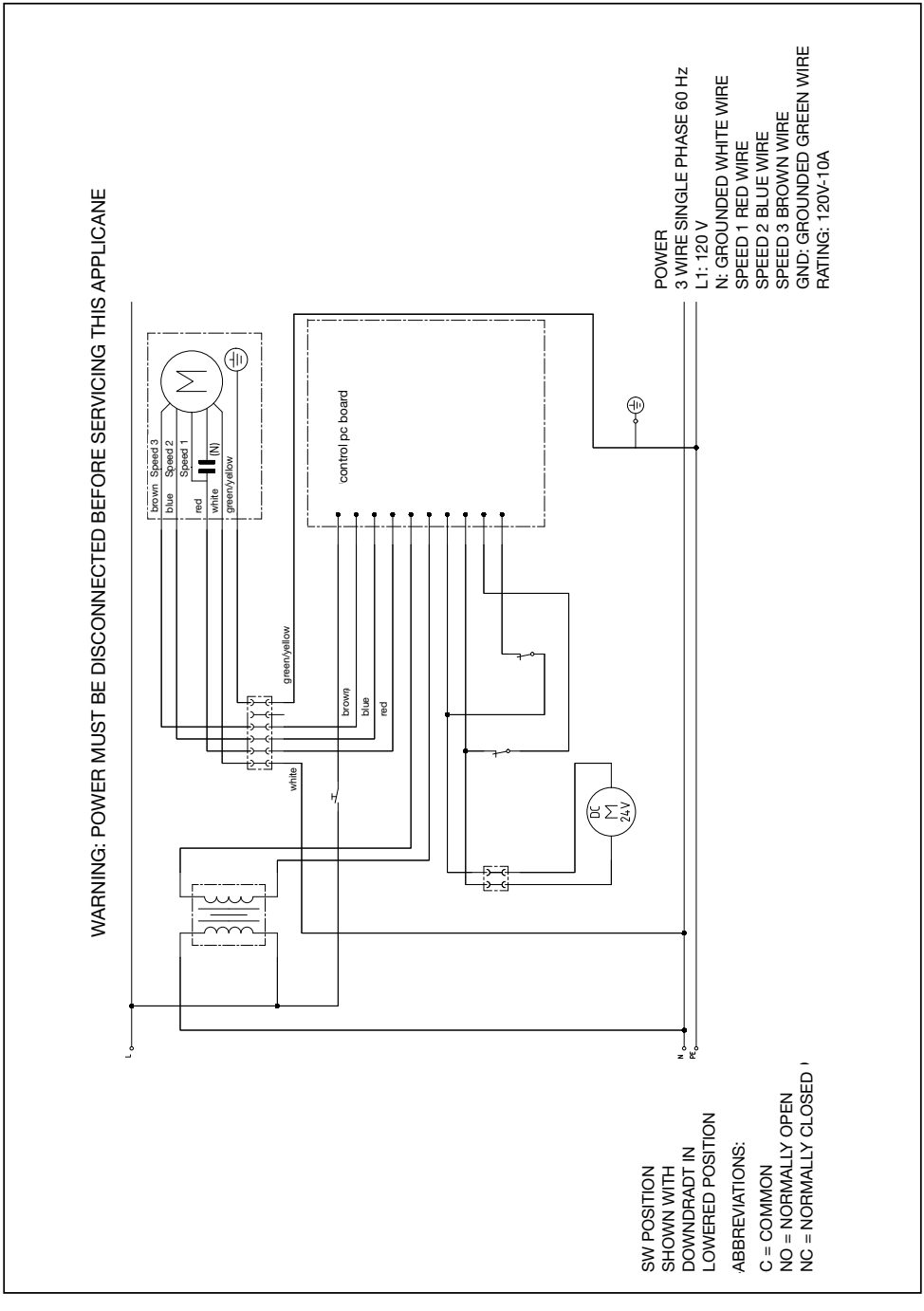

Fig. 11

Step 8: Verify Installation, Operation and Cooktop Alignment

- ☐ Before performing this procedure, verify that all packing materials were removed from inside the snorkel and that the grease filters and front panel have been properly installed. Refer to the Care and Use Manual for instructions regarding filter and front panel installation.
- ☐ Plug the vent power cord into a proper electrical receptacle and ensure that the circuit is energized.
- ☐ A. Raise the snorkel to its fully extended position by pressing the UP/DOWN push-button once. Do not hold the push-button. The elevating motor will stop when the snorkel reaches its full height. (Note: the blower will not operate unless the snorkel is fully raised).
- ☐ B. Remove protective tape from top cap.
- ☐ C. Turn the blower ON by selecting in turn each of the 3 speeds. Let the blower run several minutes at each speed to evaluate its operation.
- ☐ D. With the blower running, lower the snorkel to its fully retracted position by pressing the UP/DOWN push-button once. The blower will immediately turn off.
- ☐ E. With the blower on HIGH, close the windows and doors to the area to ensure that fan does not cause back drafting in any outlet vent for another appliance.
- ☐ F. Raise and lower the vent again, and check to make sure that the top cap on the snorkel does not catch on the back edge of the cooktop when it is lowered. If interference occurs, adjust the position of the cooktop by moving it against the front edge of the countertop. Failure to eliminate interference may result in permanent damage to the vent. Also, ensure that the vent support legs have been properly secured to the cabinet base using the screws provided.

⚠ If the vent system does not operate satisfactorily during any of the above procedures, review all steps in these Installation Instructions to ensure that nothing has been omitted or overlooked. Also, refer to the Care & Use Manual for additional information or call Thermador Customer Support 1-800-735-4328.

Note: Check boxes as tasks are completed.

⚠ CONSIGNES DE SÉCURITÉ

LIRE TOUTES LES INSTRUCTIONS AVANT D'UTILISER L'APPAREIL.

LIRE ET CONSERVER CES INSTRUCTIONS

⚠ AVERTISSEMENT

Pour réduire le risque d'incendie, de choc électrique ou de lésions corporelles, observer ce qui suit :

A. L'installation et le câblage électrique doivent être effectués par des personnes qualifiées conformément à toutes les normes et codes applicables, incluant la construction relative au feu.

B. Suffisamment d'air est nécessaire pour une combustion appropriée et l'échappement des gaz par tirage (cheminée) d'équipement à combustion pour éviter le tirage arrière. Suivre les directives du fabricant d'équipement de chauffage et les normes de sécurité telles celles fournies par l'Association nationale de protection contre les incendies (NFPA) et la Société américaine d'ingénierie de chauffage, réfrigération et climatisation (ASHRAE) ainsi que les codes locaux.

C. Au moment de couper ou percer un mur ou plafond, ne pas endommager le câblage électrique et autres services publics non apparents.

D. Les ventilateurs à conduit doivent toujours être ventilés vers l'extérieur.

E. Avant toute intervention, pensez à toujours débrancher l'appareil du réseau d'alimentation électrique.

F. Cet appareil est conçu pour une utilisation intérieure seulement. Utiliser cet appareil uniquement de la façon préconisée par le fabricant.

G. S'assurer que la table de cuisson est appropriée pour l'utilisation avec un évent de contre-tirage.

H. L'appareil n 'est pas destiné à être utilisé avec des tables de cuisson professionnelles.

⚠ AVERTISSEMENT

Pour ventilation générale seulement. Ne pas ventiler des vapeurs ou matériaux explosifs ou hasardeux.

Pour réduire le risque d'incendie et pour un échappement d'air approprié, s'assurer d'acheminer l'air vers l'extérieur. Ne pas ventiler l'air d'échappement dans les murs, plafonds, greniers, espaces fermés ou garages.

Pour réduire le risque d'incendie, utiliser des conduits en métal.

Pour réduire le risque d'incendie, de choc électrique et de lésions corporelles, le système de contre-tirage doit être utilisé avec une soufflerie intégrée, à distance ou en conduite.

Pour réduire le risque d'incendie ou de choc électrique, ne pas utiliser le ventilateur avec un dispositif de contrôle de vitesse à semi-conducteur.

Cet appareil est conforme avec la norme UL 507 pour ventilateurs électriques et la norme canadienne CAN/CSA-22.2 n° 113 pour ventilateurs. Le propriétaire et l'installateur sont tenus de déterminer si des normes ou exigences additionnelles s'appliquent pour une installation spécifique.

Pièces nécessaires (standard)

- Ruban à mesurer
- Tournevis à tête Phillips
- Ruban d'aluminium pour conduits
- Conduit (configuration variant selon l'emplacement ; voir pages 7 à 12 pour plus de détails)
- Vis à tôle additionnelles (au besoin pour l'installation de conduits)
- Scie (ou équivalent pour couper le plan de travail)
- Vis à bois n° 8 x 1 1/4 po (4)
- Plomb
- Fil pour atteindre la soufflerie à distance ou en conduite

Pièces nécessaires (spéciales)

- Soufflerie spéciale
- Boîte de transition (pour utilisation avec souffleries en conduite et à distance uniquement)
- Module de recirculation (utilisé uniquement pour les applications à recirculation)

Remarque : les systèmes de contre-tirage fonctionnent avec les souffleries suivantes : souffleries intégrées, à distance ou en conduite 600 pi3/mn souffleries à distance ou en conduite 1000 pi3/mn

Pièces fournies

- Ensemble de contre-tirage (1)
- Vis à tôle n° 8 (8)
- Réducteur de tension du cordon de soufflerie (1)
- Quincaillerie pour fixations sur évent (2)
- Queue de cochon de soufflerie à distance

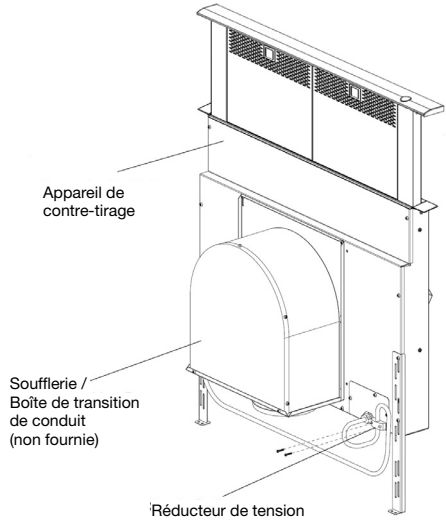

Fig. 1

INTRODUCTION
DESCRIPTION GÉNÉRALE

Le système de contre-tirage complet comprend le contre-tirage, une soufflerie et une boîte de transition si l'on utilise une soufflerie en conduite ou à distance. Un module de recirculation est également disponible lorsque la mise en place de conduits vers l'extérieur n'est pas privilégiée ou est impossible. (Voir fig. 1).
La soufflerie peut être soit intégrée (montée sur l'entrée d'évent dans l'armoire sous la table de cuisson), en conduite montée entre la cuisine et le mur extérieur à l'intérieur du conduit), ou à distance (montée sur le toit ou le mur extérieur). Lorsqu'une soufflerie à distance ou en conduite est utilisée, une transition de conduit est fixée sur l'entrée de ventilateur au lieu d'une soufflerie intégrée pour brancher l'entrée sur le conduit. La transition de conduit doit être achetée séparément.

La soufflerie intégrée ou la transition de conduit peut être monté dans différentes positions sur l'entrée pour acheminer le conduit afin d'éviter l'armoire, la structure de l'édifice, les services publics, etc.

Le système de contre-tirage est disponible en 30 ou 36 po. Il est prévu pour être utilisé uniquement avec des tables de cuisson non professionnelles.

Un kit de recirculation peut être acheté séparément et utilisé parallèlement à la soufflerie intégrée si le conduit posé vers l'extérieur ne constitue pas une option viable.

Étape 1 : plan d'installation

Suivre attentivement le processus de planification indiqué ci-dessous (voir figure 2). Les schémas n'ont PAS pour fonction de tenir lieu de planification soigneuse.

A. Déterminer si une soufflerie à distance, en conduite ou intégrée est utilisée. **L'installation d'une soufflerie à distance et en conduite requiert 4 fils plus un fil de mise à la terre allant du système de contre-tirage à la soufflerie.**

B. S'assurer que l'espace d'armoire et de plan de travail est adéquat et que l'entrée et la soufflerie sont accessibles si une réparation est requise

C. Il faut considérer les courants d'air créés par les fenêtres ouvertes, portes, climatiseur, évents de chauffage anciens, éclairages encastrés et le trafic pouvant réduire le rendement.

D. Pour les installations de tables de cuisson à gaz, s'assurer qu'une ouverture minimale de 10 po2 est prévue au coup-de-pied ou autre armoire. Une ventilation inadéquate de l'armoire sous la table de cuisson peut causer l'extinction de la flamme au moment d'actionner le système d'évent.

E. Assurer une alimentation en air dans la pièce où l'appareil est installé. Si l'air d'appoint n'est pas assuré, alors il peut en résulter des problèmes comme un contre-tirage de la cheminée du foyer.

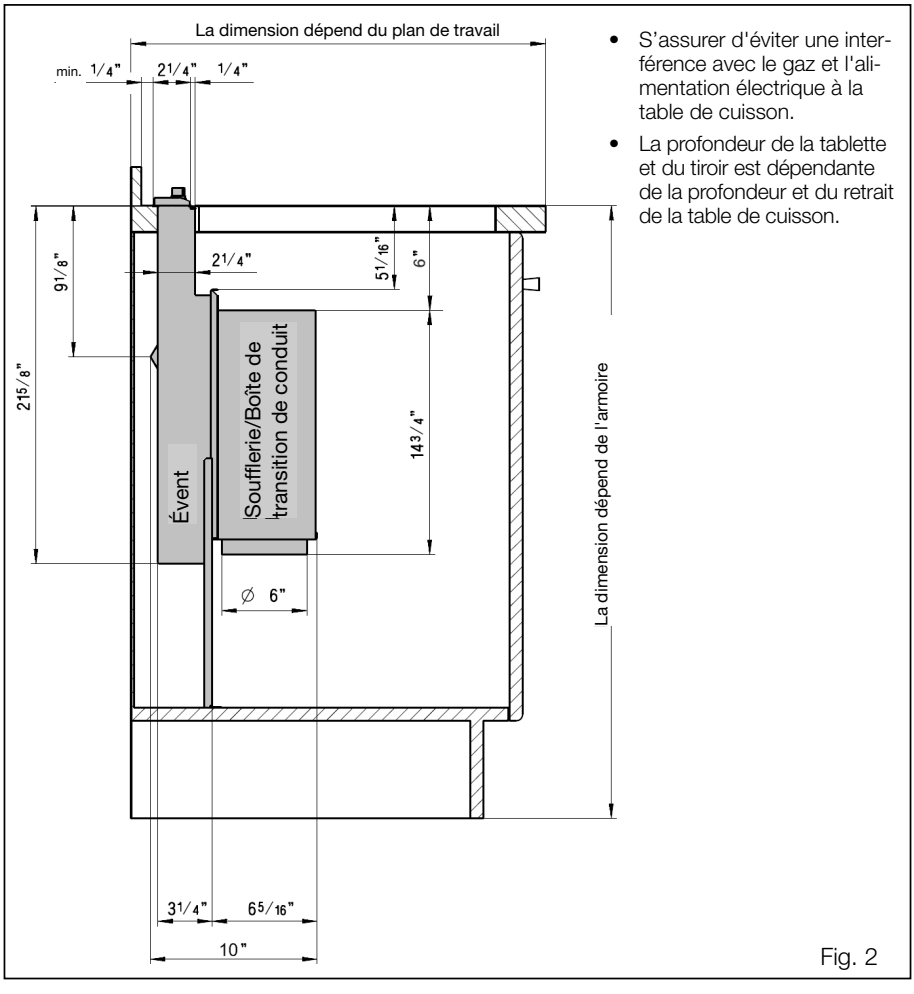

- S'assurer d'éviter une interférence avec le gaz et l'alimentation électrique à la table de cuisson.
- La profondeur de la tablette et du tiroir est dépendante de la profondeur et du retrait de la table de cuisson.

Fig. 2

F. Vérifier les chemins de conduit potentiels et choisir le plus court possible depuis l'appareil au mur extérieur ou au toit par un mur intérieur et le grenier. À des fins d'aide, des installations de conduit typiques sont montrées aux figures 3 à 6. L'installation pour un îlot requiert un conduit sous le plancher. Les emplacements péninsules requièrent habituellement des conduits latéraux par les armoires ou sous la base des armoires. Il faut prendre en considération les interférences potentielles des conduits par la structure de l'édifice (montants de plancher ou de mur) et les services publics (câblage électrique, eau, gaz, ou conduites d'égout, etc.).

G. Acheter les conduits nécessaires pour raccorder les conduits vers l'extérieur ou acheter le module de recirculation de contre-tirage séparément si le raccordement des conduits vers l'extérieur n'est pas une option viable.

Les figures 3 à 6 sont des exemples de conduits possibles

Soufflerie à distance
Installation sur le toit
Installation par le mur

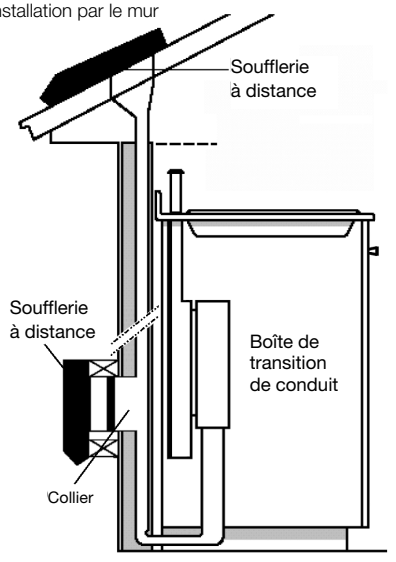

Fig. 3

Soufflerie intégrée
Installation par le mur

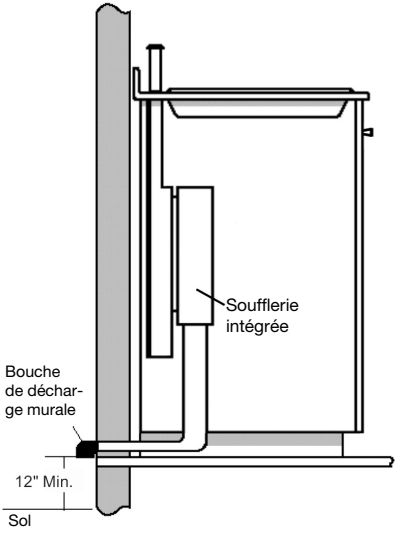

Fig. 4

Soufflerie intégrée
Installation par le mur

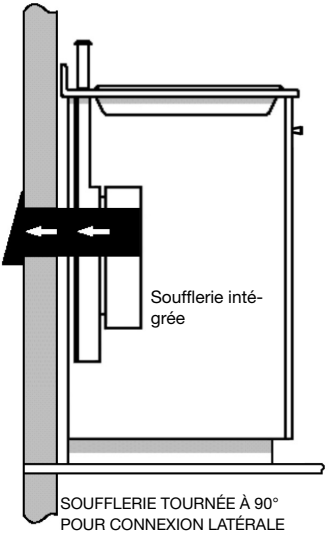

Fig. 5

Soufflerie en conduite
Installations par le mur

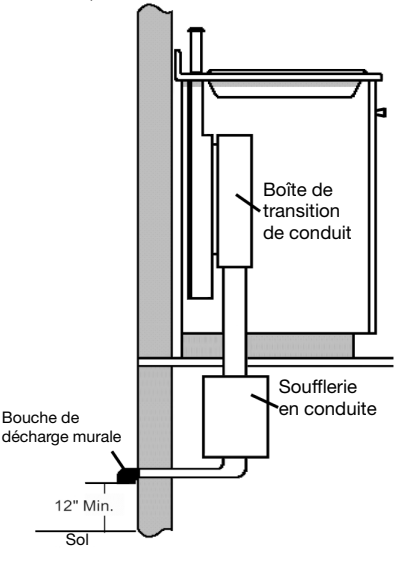

Fig. 6

DIRECTIVES D'INSTALLATION DE CONDUITS

- Le conduit doit ventiler directement vers l'extérieur (non dans un grenier, sous la résidence, dans le garage ou espace confiné). Un module de recirculation est disponible lorsque la pose de conduits vers l'extérieur est impossible.
- Garder les tracés de gaines les plus courts et droits possible.
- Les raccords (coudes et transitions) réduisent l'efficacité du débit d'air.
- Des coudes et des S, les uns à la suite des autres, offrent un débit faible et ne sont pas recommandés.
- Une courte longueur droite à l'entrée de la soufflerie à distance offre un meilleur débit.
- La transition à un conduit depuis la soufflerie intégrée ou de la transition de soufflerie à distance doit être aussi près que possible du contre-tirage. En ordre de préférence, utiliser :

  1er conduit rond 10 po

  2e conduit rond 8 po

  3e conduit 3-1/4 po x 14 po

  4e conduit rond 7 po

  5e conduit 3-1/4 po x 10 po

  6e conduit rond 6 po
- L'utilisation de conduit rond en métal flexible peut se faire seulement si aucun autre raccord de conduit n'existe. Limiter l'utilisation à de courtes longueurs et ne pas écraser les coins.
- Les coudes posés les uns à la suite des autres doivent être évités.
- Là où les codes locaux le permettent, un tuyau en plastique (40 PCV ou ABS de 7 ou 8 po de diamètre) peut être utilisé dans les endroits où il y a beaucoup d'humidité et des planchers en béton pour empêcher la rouille potentielle.
- Utiliser seulement des conduits fabriqués en matériaux acceptables conformément aux codes applicables. Tous les conduits doivent être de calibre 26 ou plus pour minimiser la flexibilité causée par le débit d'air.
- Les souffleries à distance requièrent un conduit rond de 10 ou 6 po de diamètre (selon le modèle) pour correspondre à l'anneau d'entrée. Une transition est nécessaire depuis d'autres dimensions de conduits.
- Utiliser des vis à tôle pour supporter le poids du conduit et sceller tous les joints avec du ruban à conduit.
- S'assurer que les conduits n'interfèrent pas avec les montants du plancher et du mur.
- Ne pas ventiler plus d'un évent dans un conduit simple.
- Pour les installations dans des endroits où il fait froid, il doit y avoir un registre anti-refoulement additionnel afin de minimiser le refoulement d'air froid et une barrière thermique non métallique pour minimiser la transmission des températures extérieures à l'intérieur des conduits. Le registre doit être placé du côté de l'air froid de la barrière thermique. La barrière thermique doit être aussi près que possible de l'endroit où le conduit entre dans la portion chauffée de la résidence.
- Toujours utiliser une bouche de décharge par le toit ou murale appropriée avec un registre. Les bouches de décharge murales de type sécheuse ne doivent jamais être utilisées.

Étape 2 : préparation de la découpe du plan de travail

Consulter la notice d'installation de la table de cuisson pour obtenir les dimensions de la table de cuisson, de la découpe du plan de travail et les exigences de l'armoire avant d'effectuer une découpe. La profondeur de la table de cuisson et la profondeur du dosseret du plan de travail peuvent varier considérablement l'une de l'autre. Ces variations peuvent occasionner un ajustement serré du contre-tirage et de la table de cuisson. Un plan de travail (bord antérieur) doté d'un rebord et/ou d'un dosseret anti-éclaboussure de taille importante (bord arrière) peut ne pas avoir suffisamment d'espace plat pour une installation adéquate.

☐ Vérifier que la table de cuisson est montée suffisamment vers l'avant afin que le contre-tirage puisse être installé derrière. Vérifier toutes les dimensions avant de découper le plan de travail.

Utiliser les produits physiques pour confirmer les découpes chaque fois que possible.

Pour toutes les installations, s'assurer que toutes les découpes dégagent l'intérieur du devant du rail support du plan de travail et que la table de cuisson et l'évent sont centrés de gauche à droite dans la découpe. De plus, s'assurer que les découpes avant

et arrière sont droites et parallèles au bord avant du plan de travail et au mur et/ou dosseret arrière. S'assurer que les découpes latérales sont d'équerre avec les découpes avant et arrière.

Toutes les illustrations et les dimensions sont en fonction des armoires de type américain de 24 po de profondeur x 36 po de haut standard avec plan de travail de 25 po.

Si l'on installe un plan de travail uni ou laminé comme Surrell™ et Corian®, s'assurer de suivre les instructions du fabricant du plan de travail concernant les rayons d'angle minimum, les renforts de coin, etc.

Remarque : cocher les cases au fur et à mesure de l'exécution des tâches.

Pour les dégagements latéraux pour armoires suspendues et tables de cuisson, consulter la notice d'installation de la table de cuisson.

INSTALLATION AVEC TABLE DE CUISSON

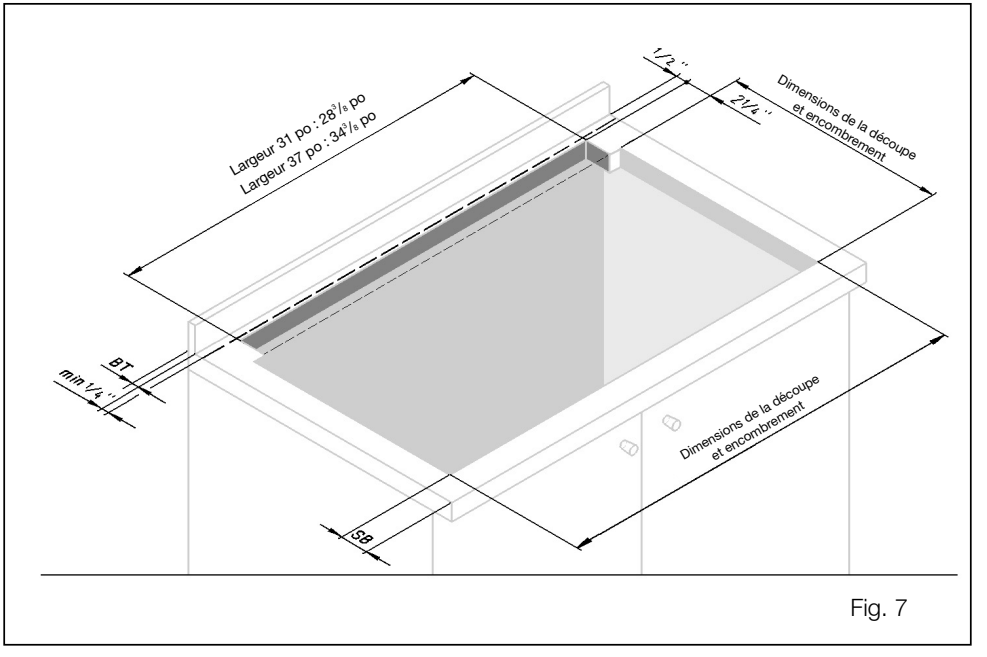

Fig. 7

Remarques

La dimension **« SB »** est la distance minimale du bord du comptoir au bord de la découpe.

La dimension **« BT »** est l'épaisseur du dosseret donnant un dégagement de 1/4 de po entre l'évent et le dosseret. Tout dosseret avec un rayon courbé à la rencontre du comptoir requiert un dégagement additionnel. L'épaisseur du dosseret peut être utilisée pour augmenter la profondeur de l'armoire et du plan de travail.

Positionner la table de cuisson dans l'ouverture du plan de travail de manière à ce que le bord arrière de la table soit superposé sur le bord arrière du système de contre-tirage.

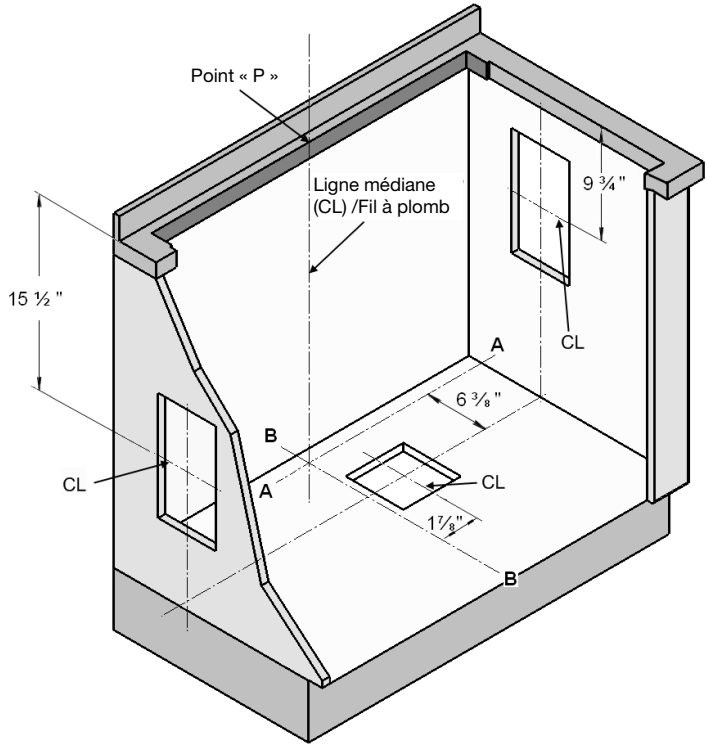

Fig. 8

Étape 3 : préparation des découpes de conduits dans l'armoire

- ☐ A. Voir figure 8. Tirer une ligne du point « P » au centre arrière de la découpe du plan de travail. Marquer ce point au bas de l'armoire en dessous. Établir deux lignes de références par ce point : une doit être parallèle au devant de l'armoire et directement sous la découpe du plan de travail arrière (ligne A-A) et l'autre (ligne B-B) doit être à angle droit par rapport à la ligne A-A.
- ☐ B. Utiliser ces lignes de références comme base aux mesures pour établir les découpes d'armoire nécessaires pour mettre en place le chemin de conduit planifié. Là où une gamme de mesures est notée, choisir une mesure que offre le meilleur dégagement des montants de murs, plafonds, services publics et autres obstructions.
- ☐ C. Avant d'effectuer les découpes de conduits, mettre temporairement l'entrée et la table de cuisson en place et fixer la soufflerie intégrée (ou raccord de transition de conduit si soufflerie à distance ou soufflerie en conduite installée). Voir étapes 6 et 7. S'assurer que les découpes de conduit marquées correspondent à l'installation des ferrures. Ajuster la découpe de conduit comme nécessaire pour correspondre à l'installation de ferrure.
- ☐ D. Enlever les ferrures placées temporairement et faire les découpes dans l'armoire pour accommoder l'installation de conduit.
- ☐ E. Faire toutes les modifications d'armoire nécessaires pour assurer les dégagements appropriés pour les tiroirs ou tablettes amovibles.

Remarque : cocher les cases au fur et à mesure de l'exécution des tâches.

Étape 4 : installation des conduits (soufflerie à distance ou en conduite, si utilisée)

- ☐ A. Installer les conduits et la soufflerie à distance (si utilisée) conformément au plan d'acheminement des conduits établi à l'étape 1.
- ☐ B. S'assurer que l'installation est conforme à toutes les directives d'installation. Le type et la longueur des conduits et le manque d'air d'appoint peuvent réduire le débit en pi3/mn. Vérifier aussi si l'ouverture où passe le conduit par le mur extérieur ou toit a été bien ajustée et scellée pour empêcher les fuites.
- ☐ C. Si l'on utilise une soufflerie intégrée, passer à l'étape 5.
- ☐ D. Si l'on utilise une soufflerie à distance ou en conduite, voir la notice d'installation fournie avec ce modèle.

Étape 5 : installation de l'électricité

- ☐ Vérifier les codes de construction locaux pour la méthode appropriée d'installation. Aux É.-U., s'il n'y a pas de codes locaux applicables, cet appareil doit être installé conformément au Code national de l'électricité ANSI/NFPA n° 70, édition courante. (Au Canada, l'installation doit être conforme aux codes d'installation CAN 1-B149.1 et .2 pour appareils à gaz et/ou aux codes locaux.
- ☐ L'appareil doit être mis à la terre. En cas de court-circuit, la mise à la terre réduit le risque de choc électrique en permettant au courant électrique de s'échapper par la terre. Cet appareil est doté d'un cordon ayant un fil de mise à la terre avec une fiche mise à la terre. La fiche doit être branchée sur une prise adéquatement installée et mise à la terre.

⚠ AVERTISSEMENT – une mise à la terre inadéquate peut causer un risque de choc électrique.

Seul un électricien qualifié, ou une personne de qualification similaire, doit effectuer les branchements électriques.

Ne pas utiliser de rallonge. Si le cordon d'alimentation est trop court, demander à un électricien qualifié d'installer une prise à proximité de l'appareil.

La prise doit être située sous le plan de travail afin que le cordon d'alimentation de 30 po venant de l'évent puisse l'atteindre. Voir figure 8.

- ☐ Le cordon doit être acheminé sous l'appareil et loin de la chaleur générée par la table de cuisson. L'accès ne doit pas être obstrué par la soufflerie, l'armoire, le conduit ou les services électricité/gaz pour la table de cuisson. Toute l'alimentation pour le système d'évent, incluant la soufflerie à distance, si utilisée, est fournie par le cordon à l'appareil d'entrée. La prise de courant peut être habituellement alimentée par une autre prise de courant de la cuisine ou avoir son propre circuit depuis le panneau de service principal.

  Ne pas brancher le cordon de l'évent sur la prise avant l'étape 8.

Étape 6 : installation de l'évent et de la table de cuisson

- ☐ A. Enlever les filtres à graisse et tout matériel d'emballage à l'intérieur de l'entrée.
- ☐ B. Régler l'entrée d'évent à l'arrière de l'ouverture du plan de travail. Mettre délicatement en position afin que les rebords sur les côtés arrières et que les bords supportent entièrement l'appareil suspendu au plan de travail.
- ☐ C. Maintenir l'appareil contre l'arrière de l'ouverture du plan de travail, faire glisser la fixation de pied vers le bas pour rencontrer le bas de l'armoire. Vérifier et régler le niveau, puis fixer les fixations de pieds à l'armoire avec les ferrures comprises.

Remarque : cocher les cases au fur et à mesure de l'exécution des tâches.

Étape 7 : installation de la soufflerie intégrée ou de la transition de conduit de sortie pour la soufflerie à distance ou en conduite

Soufflerie intégrée (voir figures 9 et 11 pour plus de détails) :

- ☐ A. Fixer la soufflerie à l'avant de la sortie d'échappement ronde avec 4 à 6 vis à tôle n°8 (selon la configuration).
- ☐ B. Faire passer le cordon **de la soufflerie** à travers le réducteur de tension.
- ☐ C. Fixer le réducteur de tension avec les vis.
- ☐ D. Fixer le réducteur de tension au contre-tirage près de la boîte de jonction.
- ☐ E. Brancher le cordon sur le contre-tirage au connecteur à 6 broches.
- ☐ F. Brancher la soufflerie sur le conduit.
- ☐ G. Positionner la table de cuisson dans l'ouverture du plan de travail de manière à ce que le bord arrière de la table soit superposé sur le bord avant de l'évent. S'assurer que le bord arrière de la table de cuisson ne bute pas contre l'avant de l'élévateur. Suivre la notice d'installation du fabricant pour installer les bandes d'étanchéité, le ruban isolant protecteur (si nécessaire), fixer solidement la table de cuisson au plan de travail et effectuer les raccordements électriques et/ou de gaz de la table de cuisson.

Remarque : cocher les cases au fur et à mesure de l'exécution des tâches.

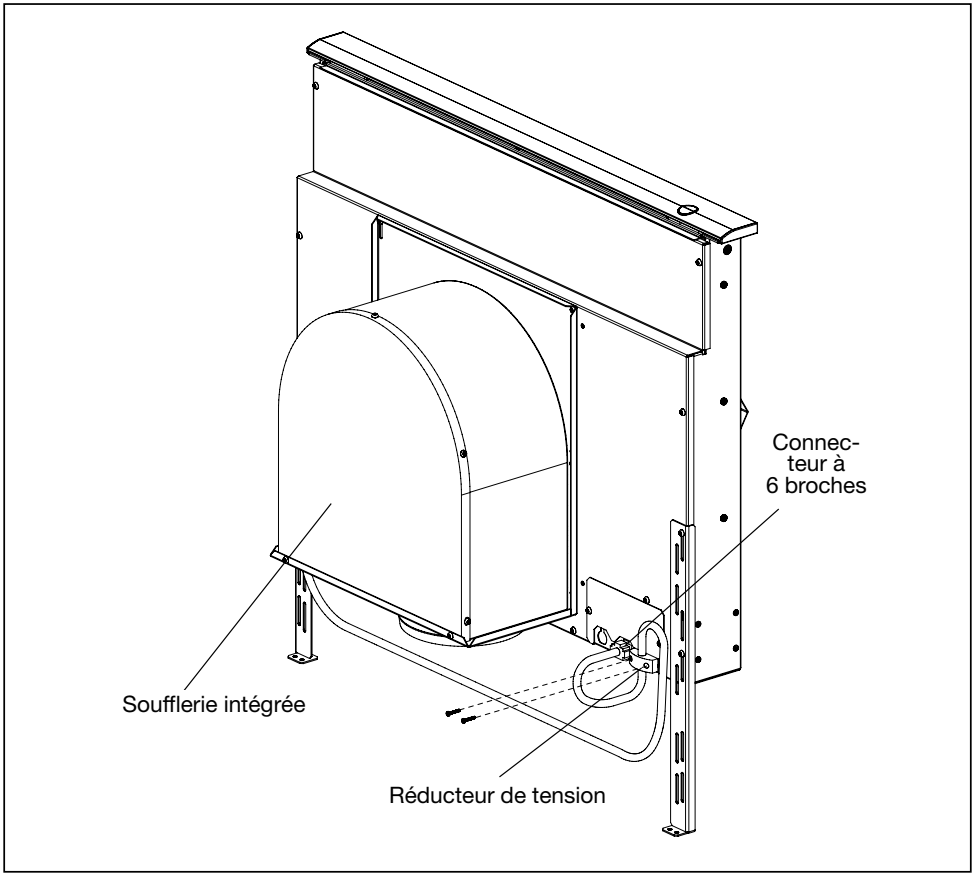

Fig. 9 – Soufflerie intégrée

Soufflerie à distance ou en conduite (voir figures 10 et 11 pour plus de détails) :

- ☐ A. Retirer le couvercle de la boîte de jonction et brancher le conduit avec 5 fils depuis la soufflerie à distance. Brancher les fils selon le diagramme de câblage, figure 10 Remettre le couvercle de la boîte de jonction.
- ☐ B. Fixer la boîte de transition de conduit sur les trous de fixation avec les vis à tôle.
- ☐ C. Faire passer la queue de cochon de la soufflerie à distance à travers le réducteur de tension.
- ☐ D. Fixer le réducteur de tension au contre-tirage près de la boîte de jonction.
- ☐ E. Brancher la queue de cochon sur le contre-tirage au connecteur à 6 broches.
- ☐ F. Acheminer les fils en tire-bouchon à la boîte de jonction.
- ☐ G. Dans la boîte de jonction, brancher le conduit avec 5 fils de la soufflerie à distance ou intégrée. Utiliser un connecteur de conduit pour fixer solidement le tout.

Remarque : la soufflerie et la boîte de transition de conduit peuvent être installées avec la sortie de conduit à gauche, vers le bas ou à droite. Installer la soufflerie ou la transition de conduit de façon à ce que le panneau d'accès puisse être enlevé pour réparation.

- ☐ H. Positionner la table de cuisson dans l'ouverture du plan de travail de manière à ce que le bord arrière de la table soit superposé sur le bord avant de l'évent. S'assurer que le bord arrière de la table de cuisson ne bute pas contre l'avant de l'élévateur. Suivre la notice d'installation du fabricant pour installer les bandes d'étanchéité, le ruban isolant protecteur (si nécessaire), fixer solidement la table de cuisson au plan de travail et effectuer les raccordements électriques et/ou de gaz de la table de cuisson.

Remarque : cocher les cases au fur et à mesure de l'exécution des tâches.

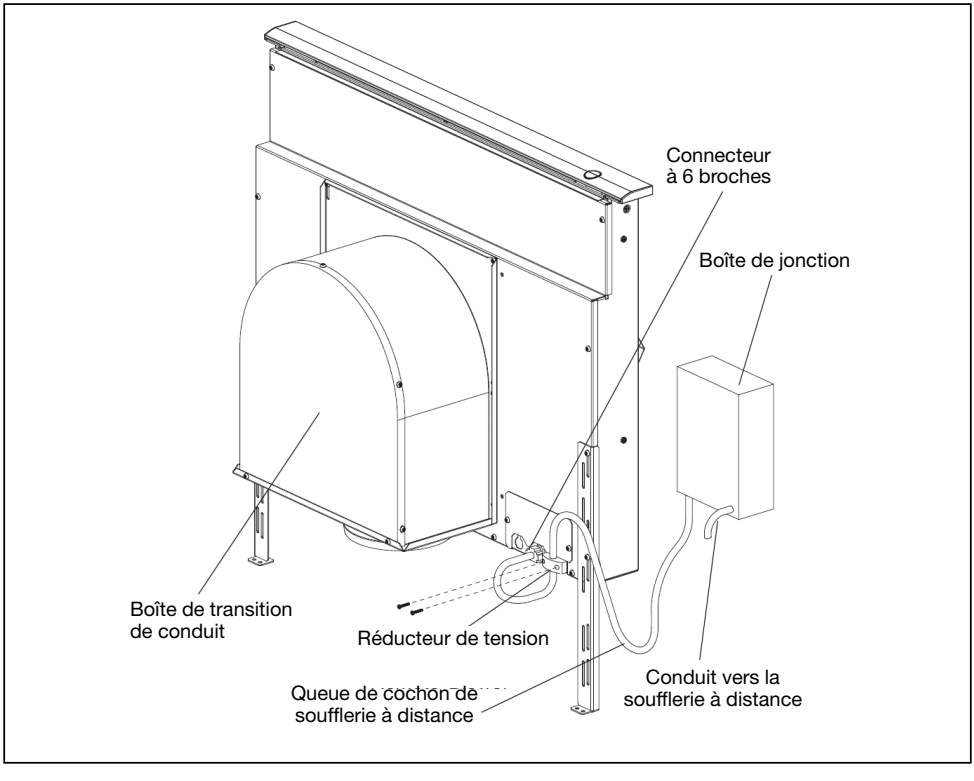

Fig. 10 – Soufflerie à distance

Schéma de câblage

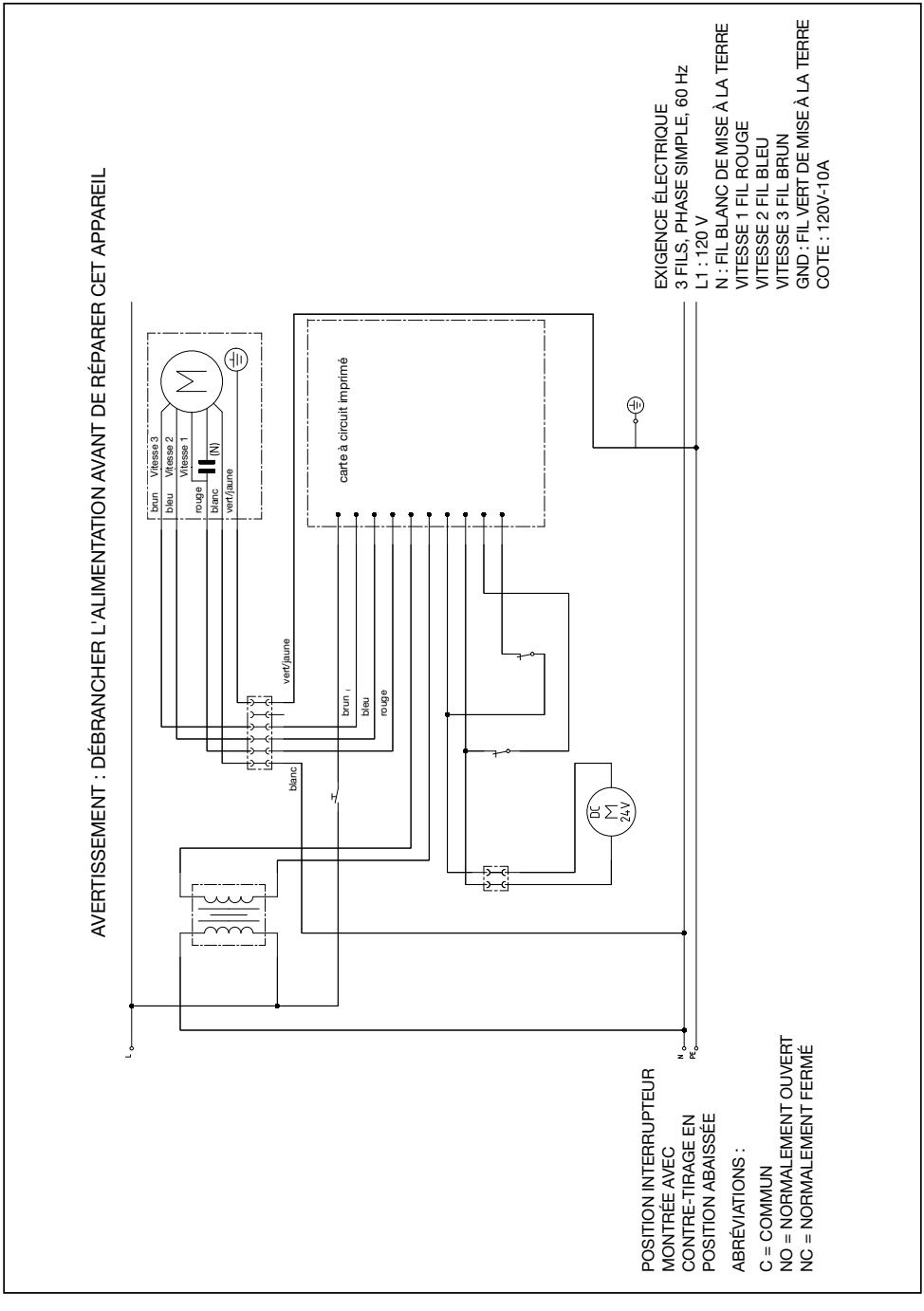

Fig. 11

Étape 8 : Vérifier l'installation, le fonctionnement et l'alignement de la table de cuisson

- ☐ Avant d'effectuer cette marche à suivre, s'assurer que tout matériel d'emballage a été enlevé à l'intérieur de l'élévateur et que les filtres à graisse et le panneau avant sont bien installés. Consulter le guide d'entretien et d'utilisation pour des instructions relatives à l'installation des filtres et du panneau avant.
- ☐ Brancher le cordon d'alimentation de l'évent sur une prise électrique appropriée et s'assurer que le circuit est sous tension.
- ☐ A. Élever l'élévateur en position maximale en pressant la touche UP/DOWN une fois. Ne pas maintenir la touche enfoncée. Le moteur s'arrête lorsque l'élévateur atteint sa pleine hauteur. (Remarque : la soufflerie ne fonctionne pas à moins que l'élévateur ne soit complètement élevé).
- ☐ B. Retirer la pellicule protectrice du dessus de l'embout.
- ☐ C. Mettre la soufflerie en circuit en choisissant, tour à tour, chacune des 3 vitesses. La laisser fonctionner quelques minutes à chaque vitesse pour évaluer le rendement.
- ☐ D. La soufflerie en fonctionnement, abaisser l'élévateur à sa position rétractée en pressant la touche UP/DOWN. La soufflerie se met immédiatement hors circuit.
- ☐ E. La soufflerie en position élevée, fermer les fenêtres et portes de la pièce pour s'assurer que le ventilateur ne cause pas un contre-tirage dans tout évent de sortie d'autres appareils.
- ☐ F. Élever et abaisser de nouveau l'évent et s'assurer que l'embout sur l'élévateur n'accroche pas le bord arrière de la table de cuisson lorsqu'il est abaissé. S'il y a une interférence, régler la position de la table de cuisson en la déplaçant contre le bord avant du plan de travail. Si l'interférence n'est pas éliminée, cela peut causer des dommages permanents à l'évent. De plus, s'assurer que les pieds supports de l'évent sont fixés adéquatement à la base de l'armoire avec les vis fournies.

⚠ Si le système d'évent ne fonctionne pas adéquatement pendant une des marches à suivre susmentionnées, revoir toutes les étapes de cette notice d'installation pour s'assurer que rien n'a été oublié. Pour de plus amples informations, consulter également le guide d'entretien et d'utilisation ou téléphoner au service à la clientèle de Thermador au 1-800-735-4328.

Remarque : cocher les cases au fur et à mesure de l'exécution des tâches.

⚠ INSTRUCCIONES DE SEGURIDAD

LEA TODAS LAS INSTRUCCIONES ANTES DE USAR EL APARATO.

LEA Y GUARDE ESTAS INSTRUCCIONES

⚠ ADVERTENCIA

Para reducir el riesgo de fuego, descargas eléctricas o sufrir lesiones, observe lo siguiente:

A. El trabajo de instalación y la instalación eléctrica deben ser realizados por (una) persona(s) autorizada(s) de acuerdo con todos los códigos y normas aplicables, incluidos los códigos de construcción con respecto a incendios.

B. Se necesita suficiente aire para lograr una combustión apropiada y para sacar los gases a través del tubo de humo (chimenea) del quemador de combustible para evitar el contratiro. Siga las pautas del fabricante del equipo de calefacción y las normas de seguridad, tales como las que fueron publicadas por la Asociación Nacional de Protección contra Fuegos (NFPA) y la Sociedad Americana para Ingeniería de Calefacción, Refrigeración y Aire Acondicionado (ASHRAE), y de las autoridades locales.

C. No dañe el cableado eléctrico ni otras instalaciones de servicios ocultas cuando corte o perfore la pared o el techo.

D. Los ventiladores entubados siempre deben ser ventilados hacia el exterior.

E. Siempre desenchufe o desconecte el aparato de la fuente de alimentación eléctrica antes de realizar el servicio técnico.

F. Esta unidad fue diseñada para uso exclusivo en interiores. Use esta unidad solamente para el uso previsto por el fabricante.

G. Asegúrese de que la parrilla sea adecuada para uso con una ventilación de tiro descendente.

H. No diseñado para uso con parrillas profesionales.

⚠ ADVERTENCIA

Solamente para uso de ventilación general. No se debe usar para extraer materiales ni vapores peligrosos o explosivos.

Para reducir el riesgo de fuego y para extraer el aire correctamente, asegúrese de conducir el aire hacia el exterior. No extraiga el aire de escape a espacios dentro de paredes, techos, áticos, huecos sanitarios o garajes.

Para reducir el riesgo de fuego, utilice solamente ductos de metal.

Para reducir el riesgo de fuego, descargas eléctricas y lesiones a personas, el tiro descendente debe utilizarse con un ventilador interno, remoto o en línea.

Para reducir el riesgo de fuego o descargas eléctricas, no use el ventilador con ningún regulador de velocidad de estado sólido.

Este aparato cumple con la norma UL 507 para ventiladores eléctricos y la norma canadiense CAN/CSA-22.2 No. 113 para ventiladores. Es la responsabilidad del propietario y del instalador determinar si se aplican requisitos o normas adicionales en instalaciones específicas.

Partes necesarias (estándares)

- Cinta de medir
- Destornillador de cabeza Phillips
- Cinta para ductos de aluminio
- Ductos (la configuración varía según el lugar; Ver las páginas 7-12 para más información)
- Tornillos autorroscantes adicionales (según sea necesario para instalar los ductos)
- Sierra (o elemento equivalente para cortar la cubierta)
- Tornillos para madera (4) #8 x 1 1/4"
- Plomada
- Cable para el ventilador remoto o en línea

Partes necesarias (especiales)

- Ventilador especial
- Caja de transición (para uso solamente con ventiladores en línea y remotos)
- Módulo de recirculación (utilizado solamente para aplicaciones de recirculación)

Nota: Los tiros descendentes son aptos para los siguientes ventiladores: Ventiladores integrados, remotos o en línea 600 CFM Ventiladores remotos o en línea 1000 CFM

Partes que se incluyen

- Conjunto del tiro descendente (1)
- Tornillos autorroscantes #8 (8)
- Prensacables para el cable del ventilador (1)
- Equipo para soportes en la ventilación (2)
- Cable flexible del ventilador remoto

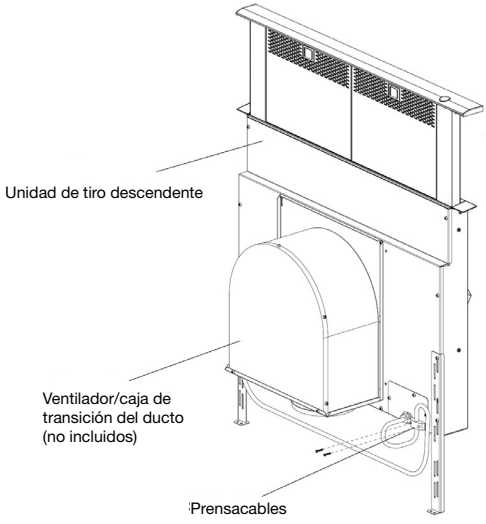

Fig. 1

INTRODUCCIÓN

DESCRIPCIÓN GENERAL

El sistema de tiro descendente completo consta de un tiro descendente, un ventilador y una caja de transición en caso de utilizar un ventilador en línea o remoto. También se dispone de un módulo de recirculación cuando no se prefiere o no es posible tener una salida de aire hacia el exterior. (Ver la Fig. 1).
El ventilador puede ser integral (montado sobre la toma de aire del ventilador en el gabinete abajo de la parrilla), en línea (montado entre la cocina y la pared exterior a lo largo de la línea del ducto) o remoto (montado en el techo o la pared exterior). Cuando se utiliza un ventilador remoto o en línea, se debe montar una transición del ducto en la toma de aire del ventilador en lugar del ventilador integral para conectar la toma de aire al ducto. Se debe comprar la transición del ducto por separado.

Se puede montar el ventilador integral o la transición del ducto en posiciones diferentes sobre la toma de aire para enrutar los ductos y evitar gabinetes, marcos de construcción, instalaciones de servicios, etc.

El sistema de tiro descendente está disponible en 30 pulgadas o 36 pulgadas. Diseñado únicamente para uso con parrillas no profesionales.

Se puede comprar un kit de recirculación por separado y utilizarlo junto con el ventilador integral si tener una salida de aire hacia el exterior no es una opción viable.

Paso 1: Planear la instalación

Seguir los procedimientos de planeación a continuación cuidadosamente (Ver la Figura 2). Los dibujos NO reemplazan una planeación cuidadosa.

A. Determinar si se va a utilizar un ventilador remoto, en línea o integral. **La instalación de un ventilador remoto y en línea requiere 4 cables más un cable de tierra desde el tiro descendente hasta el ventilador.**

B. Asegurarse de proporcionar el espacio apropiado de gabinete y cubierta, y que la toma de aire y el ventilador estén accesibles por si se requiere realizar el servicio técnico.

C. Considerar que las corrientes cruzadas creadas por ventanas y puertas abiertas adyacentes, aire acondicionado, ventilaciones de calefacción usadas, luces empotradas del techo y patrones de tránsito pueden afectar el rendimiento.

D. Para instalaciones de parrillas de gas, asegurar una abertura mínima de 10 pulgadas cuadradas en el área del panel de pie u otra área del gabinete. Una ventilación incorrecta del gabinete abajo de la parrilla puede provocar que se apaguen las llamas al operar el sistema de ventilación.

E. Proporcionar suministro de aire o “aire necesario” al cuarto donde se va a instalar la unidad. Cuando no se proporciona el “aire necesario”, entonces se pueden presentar problemas, tales como corrientes descendentes del tiro de una chimenea.

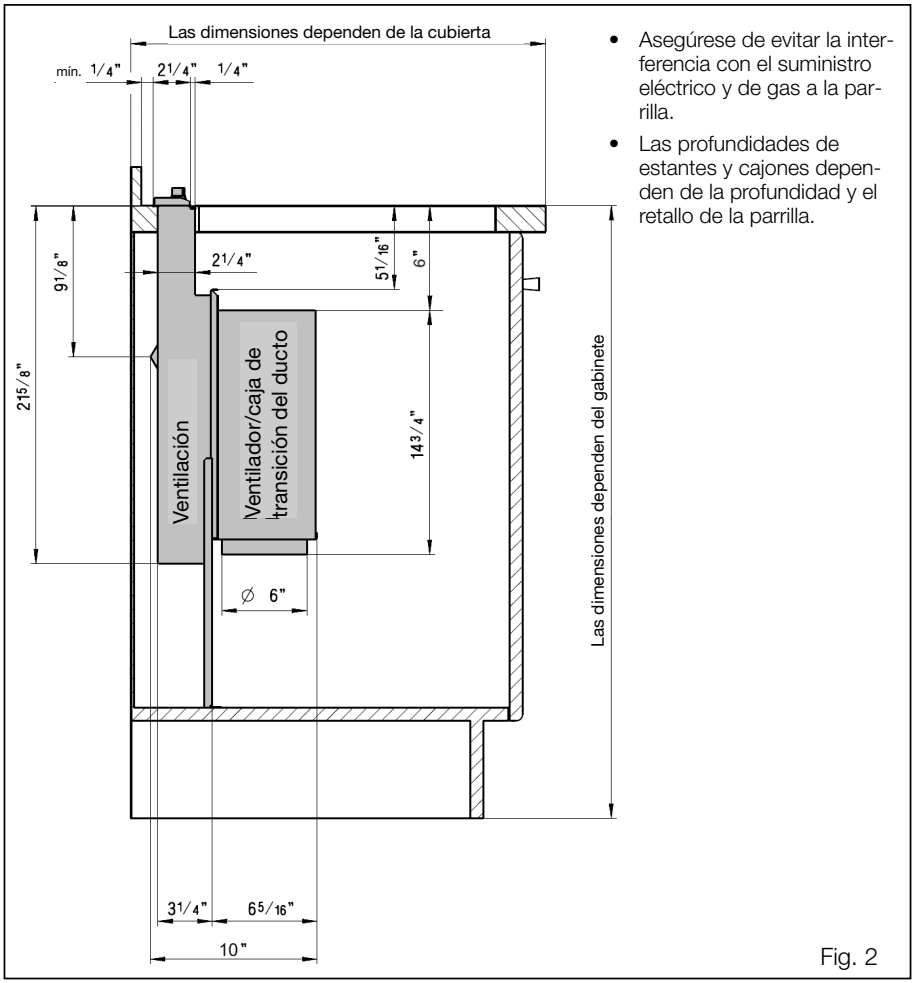

- Asegúrese de evitar la interferencia con el suministro eléctrico y de gas a la parrilla.
- Las profundidades de estantes y cajones dependen de la profundidad y el retallo de la parrilla.

Fig. 2

F. Investigar posibles rutas de los ductos y escoger la ruta más corta posible desde la unidad a una pared exterior o al techo a través de una pared interior y ático. Para fines de orientación, las figuras 3 a 6 muestran instalaciones típicas de ductos como ejemplos. La instalación en una isla requiere colocar los ductos debajo del piso. Las instalaciones en península generalmente requieren colocar los ductos en forma lateral, a través de los gabinetes, o debajo de los espacios para los pies en los gabinetes. Considerar posibles interferencias con los ductos debido a bastidores y marcos de construcción (viguetas de piso, pernos de pared, etc.) e instalaciones de servicios (cableado eléctrico, líneas de gas, agua o de desagüe, etc.).

G. Comprar los ductos necesarios para que el aire salga hacia el exterior o comprar el módulo de recirculación de tiro descendente por separado si tener una salida de aire hacia el exterior no es una opción viable.

Las Figuras 3 a 6 son ejemplos de posibles ductos

Ventilador remoto Instalación con montaje en el techo Instalación a través de la pared

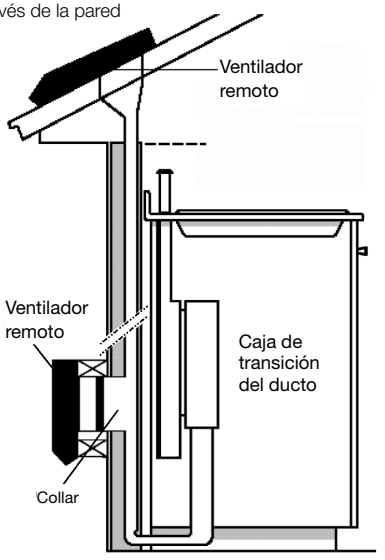

Fig. 3

Ventilador integral Instalación a través de la pared

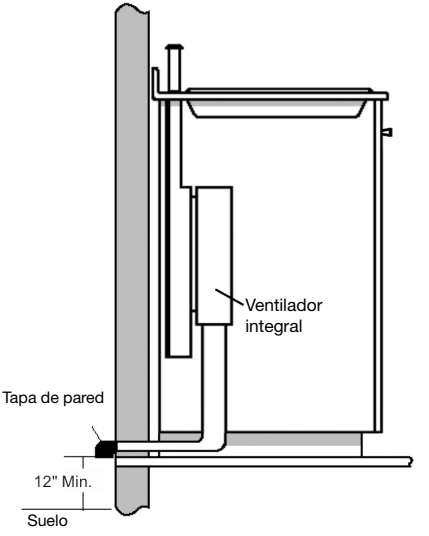

Fig. 4

Ventilador integral Instalación a través de la pared

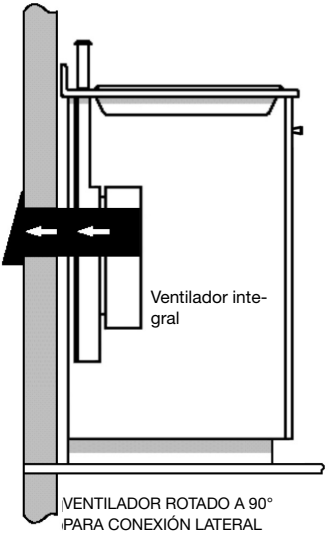

Fig. 5

Ventilador en línea Instalaciones a través de la pared

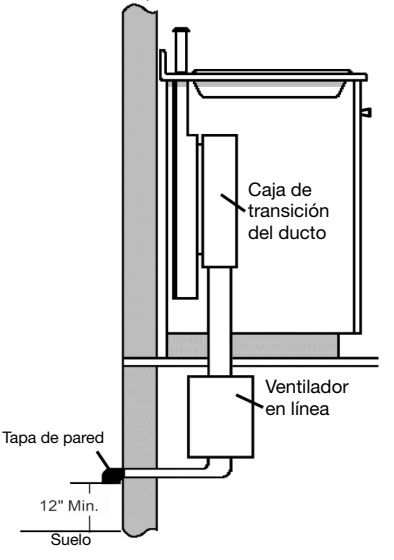

Fig. 6

LINEAMIENTOS PARA LA INSTALACIÓN DE DUCTOS

- Los ductos deben extraer el aire directamente hacia el exterior (no hacia un ático, debajo de la casa, al garaje o a cualquier espacio confinado). Se dispone de un módulo de recirculación cuando no es posible tener una salida de aire hacia el exterior.
- Los tramos de los ductos deben quedar lo más cortos y rectos posible.
- Las conexiones de ductos (codos y transiciones) reducen la eficiencia del flujo de aire.
- Los codos conectados uno al otro y los giros en forma de “S” reducen el flujo y no se recomiendan.
- Un ducto corto y recto a la entrada del ventilador remoto produce el mejor rendimiento.
- La transición al ducto del ventilador integral o la transición del ducto remoto debe estar lo más cerca posible del tiro descendente. En orden de preferencia, utilizar

  1er ducto redondo de 10"

  2do ducto redondo de 8"

  3er ducto de 3-1/4" x 14"

  4to. ducto redondo de 7"

  5to. ducto de 3-1/4" x 10"

  6to. ducto redondo de 6"
- Solamente se deben usar ductos redondos flexibles de metal cuando no existe ninguna otra conexión de ductos. Limitar el uso a longitudes cortas y no aplastarlos al hacer esquinas.
- Se deben evitar los codos conectados uno al otro.
- Donde los códigos locales lo permiten, se puede utilizar tubo de plástico (tubo de PVC calibre 40 o tubo ABS con diámetro de 7" u 8") en áreas con elevada humedad del suelo y en pisos de losa para eliminar la futura oxidación.
- Utilizar solamente ductos construidos de materiales aceptables por los códigos aplicables. Todos los ductos deben ser de calibre 26 o más grueso para minimizar la flexión debido al flujo de aire.
- Los ventiladores remotos requieren un ducto redondo con diámetro de 10" o 6" (según el modelo) para hacer juego con el anillo de entrada. Se necesita una transición para otros tamaños de ductos.
- Usar tornillos autorroscantes como se requieren para soportar el peso del ducto y sellar todas las uniones con cinta para ductos.
- Asegurarse de que el ducto no interfiera con las viguetas de piso o pernos de pared.
- No extraer el aire de más de una ventilación a un solo tramo del ducto.
- Las instalaciones en clima frío deben contar con un regulador de contratiro adicional instalado para minimizar el reflujo de aire frío y una barrera térmica no metálica para minimizar la conducción de las temperaturas externas como parte del ducto. El regulador de tiro debe estar en el lado del aire frío de la barrera térmica. La barrera debe estar tan cerca como sea posible del lugar donde el ducto ingresa a la parte calefaccionada de la casa.
- Siempre utilizar una tapa apropiada de techo o pared con un regulador de tiro. Nunca se deben usar tapas de pared tipo lavandería.

Paso 2: Preparar el recorte en la cubierta

Consultar las instrucciones de instalación de la parrilla para conocer las dimensiones de la parrilla, del recorte en la cubierta y los requisitos de los gabinetes antes de realizar cualquier recorte. La profundidad de la parrilla y la profundidad de la salpicadura trasera de la cubierta pueden variar en gran medida de una a otra. Estas variaciones pueden hacer que quede muy poco espacio entre el tiro descendente y la parrilla. Es posible que una cubierta (borde delantero) con un reborde elevado y/o una salpicadura trasera (borde trasero) ancha no deje suficiente cubierta plana para realizar una instalación adecuada.

☐ Verificar que la parrilla se encuentre lo suficientemente hacia adelante para que el tiro descendente entre detrás. Verificar todas las dimensiones antes de cortar las cubiertas.

Usar los productos físicos para confirmar los recortes, siempre que sea posible.

Verificar para todas las instalaciones que todos los recortes liberen el interior del riel de soporte delantero de la cubierta, y que la parrilla y la ventilación queden centradas de izquierda a derecha dentro del recorte. Además, asegurar que los recortes en la parte delantera

y trasera estén rectos y paralelos al borde delantero de la cubierta y la salpicadura trasera y/o la pared. Asegurar que los recortes laterales estén en escuadra respecto de los recortes de la parte delantera y trasera.

Todas las ilustraciones y dimensiones se basan en gabinetes estándares estilo americano de 24" de profundidad por 36" de altura con cubiertas de 25".

Al instalar cubiertas laminadas o con superficies sólidas como Surell™ y Corian®, asegurarse de seguir las instrucciones del fabricante de la cubierta con respecto a los radios mínimos de esquinas, el refuerzo de las esquinas, etc.

Nota: Marcar las casillas a medida que se completen las tareas.

Consultar las instrucciones de instalación de la parrilla para los espacios libres de gabinetes elevados y los costados de la parrilla.

INSTALACIÓN CON PARRILLAS

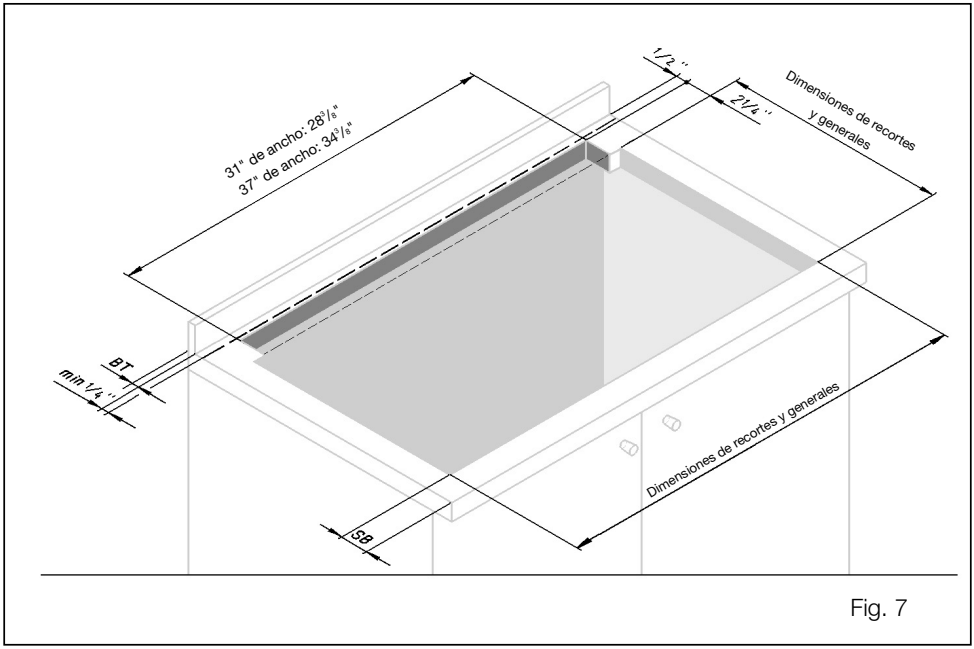

Fig. 7

Notas

La dimensión **"SB"** es la mínima distancia del borde delantero de la cubierta al borde delantero del recorte.

La dimensión **"BT"** es el espesor de la salpicadura trasera que proporciona 1/4" de espacio libre entre la ventilación y la salpicadura trasera. Una salpicadura con radio curvado donde hace contacto con la cubierta va a necesitar un espacio libre adicional. Se pueden usar salpicaduras traseras más gruesas aumentando las profundidades de la cubierta y del gabinete.

Colocar la parrilla en la abertura de la cubierta de modo que el borde trasero de la parrilla se superponga con el borde delantero del tiro descendente.

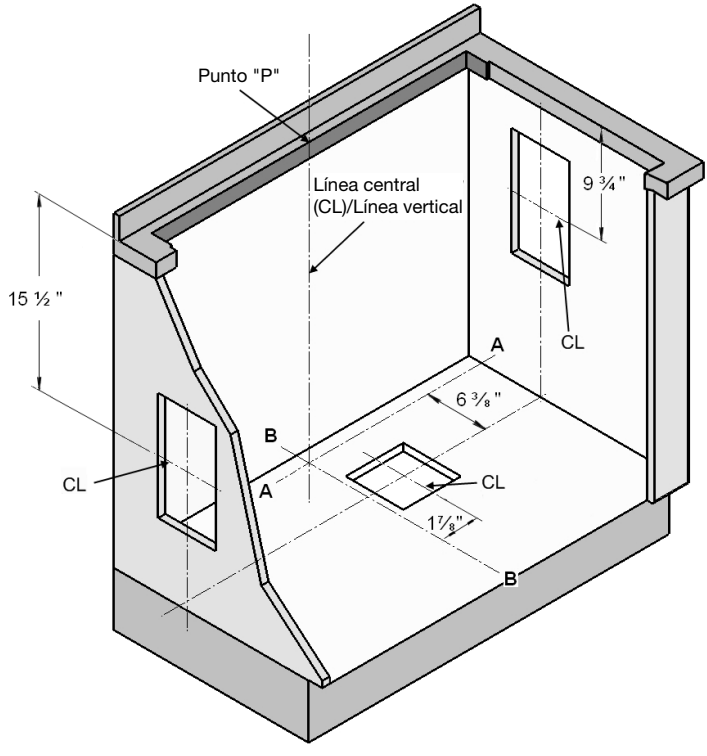

Fig. 8

Paso 3: Preparar los recortes para los ductos en el gabinete

☐ A. Consultar la Figura 8. Establecer una línea vertical desde el punto “P” en el centro trasero del recorte en la cubierta. Marcar este punto en el fondo del gabinete que se encuentra debajo. Construir dos líneas de referencia a través de este punto: una debe quedar paralela al frente del gabinete y directamente debajo del recorte trasero de la cubierta (Línea A-A), y la otra (Línea B-B) debe quedar en ángulos rectos a A-A.

☐ B. Utilizando estas líneas de referencia como base para las mediciones, diseñar los recortes necesarios del gabinete para implementar la ruta planeada del ducto. Donde se nota un rango de mediciones, escoger una medición que permita el espacio libre más adecuado desde los pernos de pared, viguetas de pisos, instalaciones de servicios u otras obstrucciones.

☐ C. Antes de hacer los recortes del ducto, colocar la toma de aire y la parrilla temporalmente en su lugar y fijar el ventilador integral (o la conexión para la transición del ducto si se instala un ventilador remoto o en línea). Consultar los pasos 6 y 7. Verificar que los recortes del ducto, tal como están marcados, coincidan con la instalación del equipo. Ajustar el recorte del ducto según sea necesario para coincidir con la instalación del equipo.

☐ D. Quitar el equipo colocado temporalmente y hacer los recortes en el gabinete para acomodar la instalación del ducto.

☐ E. Realizar todas las otras modificaciones necesarias en el gabinete para proporcionar espacios libres suficientes para los cajones o estantes removibles.

Nota: Marcar las casillas a medida que se completen las tareas.

Paso 4: Instalar el ducto (ventilador remoto o en línea, si se usa)

- ☐ A. Instalar el ducto y el ventilador remoto (si se usa) de acuerdo con el plan de enrutamiento del ducto desarrollado en el paso 1.
- ☐ B. Asegurar que la instalación cumpla con todos los lineamientos de instalación. El tipo y la longitud del ducto, y la falta de aire de reposición pueden reducir los CFM. Verificar también que la abertura donde el ducto atraviesa la pared exterior o el techo haya sido sellada correctamente para evitar fugas.
- ☐ C. Si se utiliza el ventilador integral, seguir con el paso 5.
- ☐ D. Si se utiliza el ventilador remoto o en línea, consultar las instrucciones de instalación para ese modelo.

Paso 5: Instalar el servicio eléctrico

- ☐ Primero se deben revisar los códigos locales de construcción para conocer el método correcto de instalación. En los E.U.A., cuando no hay códigos locales aplicables, se debe instalar esta unidad de acuerdo con el Código Eléctrico Nacional ANSI/ NFPA No. 70, edición actual. (En Canadá, la instalación debe cumplir con los códigos de instalación CAN 1-B149.1 y .2 para aparatos con quemadores de gas y/o los códigos locales).
- ☐ El aparato debe estar conectado a tierra. En caso de un cortocircuito eléctrico, la conexión a tierra reduce el riesgo de una descarga eléctrica proporcionando un cable de escape para la corriente eléctrica. Esta aparato viene equipado con un cable con un hilo de conexión a tierra y un enchufe para conexión a tierra. Se debe enchufar en un tomacorriente correctamente instalado y puesto a tierra.

⚠ ADVERTENCIA – Una conexión incorrecta a tierra puede crear el riesgo de sufrir una descarga eléctrica.

Únicamente un electricista calificado o una persona que esté igualmente calificada deben realizar las conexiones eléctricas.

No usar un cable de extensión. Si el cable de alimentación eléctrica es muy corto, contratar a un electricista calificado para que instale un tomacorriente cerca del aparato.

El receptáculo debe quedar debajo de la cubierta, de modo que el cable de alimentación de 30 pulgadas de largo de la ventilación pueda alcanzarlo. Ver la Figura 8.

- ☐ Se debe enrutar el cable por debajo del aparato y lejos del calor generado por la parrilla. El acceso no debe estar obstruido por el ventilador, el gabinete, el ducto ni las instalaciones eléctricas/de gas para la parrilla. Toda la corriente para el sistema de ventilación (incluido el ventilador remoto, si se usa) es suministrada a través del cable a la unidad de toma de aire. Generalmente se puede extender el tomacorriente desde otro tomacorriente en la cocina o puede tener su propio circuito del panel principal de servicio.

No se debe enchufar el cable del ventilador al receptáculo hasta el paso 8.

Paso 6: Montar el ventilador y la parrilla

- ☐ A. Sacar los filtros de grasa y cualquier material de empaque desde el interior de la toma de aire.
- ☐ B. Poner la toma de aire en la parte trasera de la abertura de la cubierta. Bajarla cuidadosamente a su posición de modo que las bridas de los lados traseros y los bordes soporten completamente la unidad que cuelga de la cubierta.
- ☐ C. Sostener la unidad contra la parte trasera de la abertura de la cubierta y deslizar las abrazaderas de las patas hacia abajo hasta tener contacto con el fondo del gabinete. Revisar si está nivelada y hacer ajustes si es necesario, luego fijar las abrazaderas de las patas al gabinete con los tornillos que se incluyen.

Nota: Marcar las casillas a medida que se completen las tareas.

Paso 7: Montar el ventilador integral o la transición del ducto de salida para el ventilador remoto o en línea

Ventilador integral (ver Figuras 9 y 11 para más detalles):

- ☐ A. Fijar el ventilador en el frente de la salida redonda de escape con 4-6 tornillos autorroscantes #8 (según la configuración).
- ☐ B. Pasar el cable **del ventilador** a través del prensacables.
- ☐ C. Fijar el prensacables con tornillos.
- ☐ D. Fijar el prensacables al tiro descendente cerca de la caja de conexiones.
- ☐ E. Conectar el cable al tiro descendente en el conector de 6 clavijas.
- ☐ F. Conectar el ventilador al ducto.
- ☐ G. Colocar la parrilla en la abertura de la cubierta con el borde trasero de la parrilla superpuesto al borde delantero de la ventilación. Asegurarse de que el borde trasero de la parrilla no toque el frente del tubo de respiración. Seguir las instrucciones de instalación del fabricante para instalar tiras de empaque, cinta de protección térmica (si es necesario), asegurar la parrilla a la cubierta y hacer las conexiones eléctricas y/o de gas de la parrilla.

Nota: Marcar las casillas a medida que se completen las tareas.

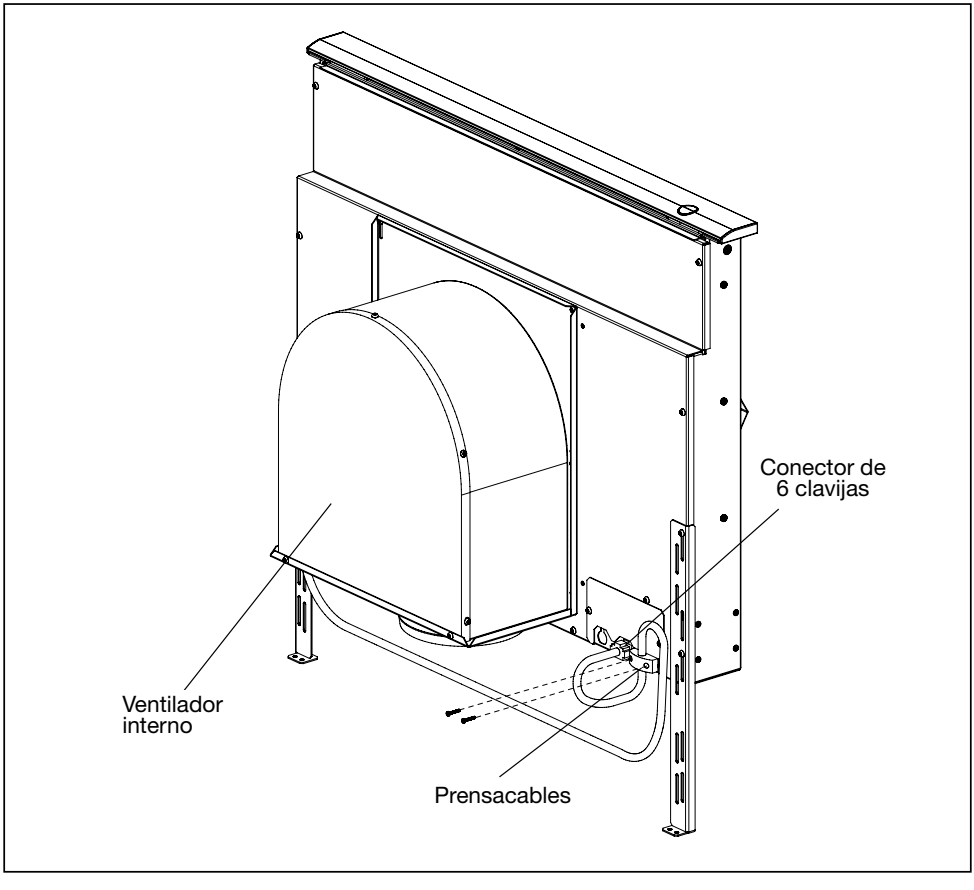

Fig. 9 – Ventilador interno

Ventilador remoto o en línea (ver Figuras 10 y 11 para más detalles):

- ☐ A. Quitar la tapa de la caja de conexiones y conectar el conducto con 5 cables del ventilador remoto. Conectar los cables según el diagrama de cableado, Fig. 10. Volver a colocar la tapa de la caja de conexiones.
- ☐ B. Fijar la transición del ducto en los orificios de montaje con tornillos autorroscantes.
- ☐ C. Pasar el cable flexible del ventilador remoto a través del prensacables.
- ☐ D. Fijar el prensacables al tiro descendente cerca de la caja de conexiones.
- ☐ E. Conectar el cable flexible al tiro descendente en el conector de 6 clavijas.
- ☐ F. Enrutar los hilos del cable flexible a la caja de conexiones.
- ☐ G. Conectar el conducto con cinco cables del ventilador remoto o en línea dentro de la caja de conexiones. Utilizar un conector para conducto para fijarlo.

Nota: Se pueden instalar el ventilador y la caja de transición del ducto con la salida del ducto a la izquierda, abajo o a la derecha. Instalar el ventilador o la transición del ducto de tal modo que se puedan quitar los paneles de acceso para realizar el servicio técnico.

- ☐ H. Colocar la parrilla en la abertura de la cubierta con el borde trasero de la parrilla superpuesto al borde delantero de la ventilación. Asegurarse de que el borde trasero de la parrilla no toque el frente del tubo de respiración.
  Seguir las instrucciones de instalación del fabricante para instalar tiras de empaque, cinta de protección térmica (si es necesario), asegurar la parrilla a la cubierta y hacer las conexiones eléctricas y/o de gas de la parrilla.

Nota: Marcar las casillas a medida que se completen las tareas.

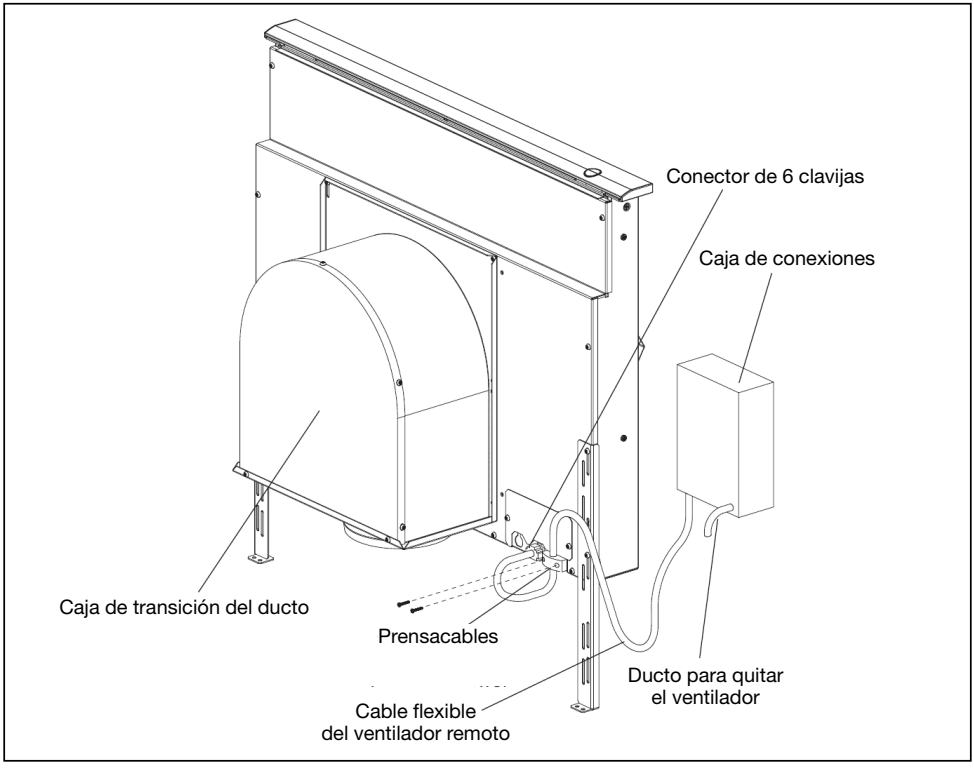

Fig. 10 – Ventilador remoto

Diagrama de cableado

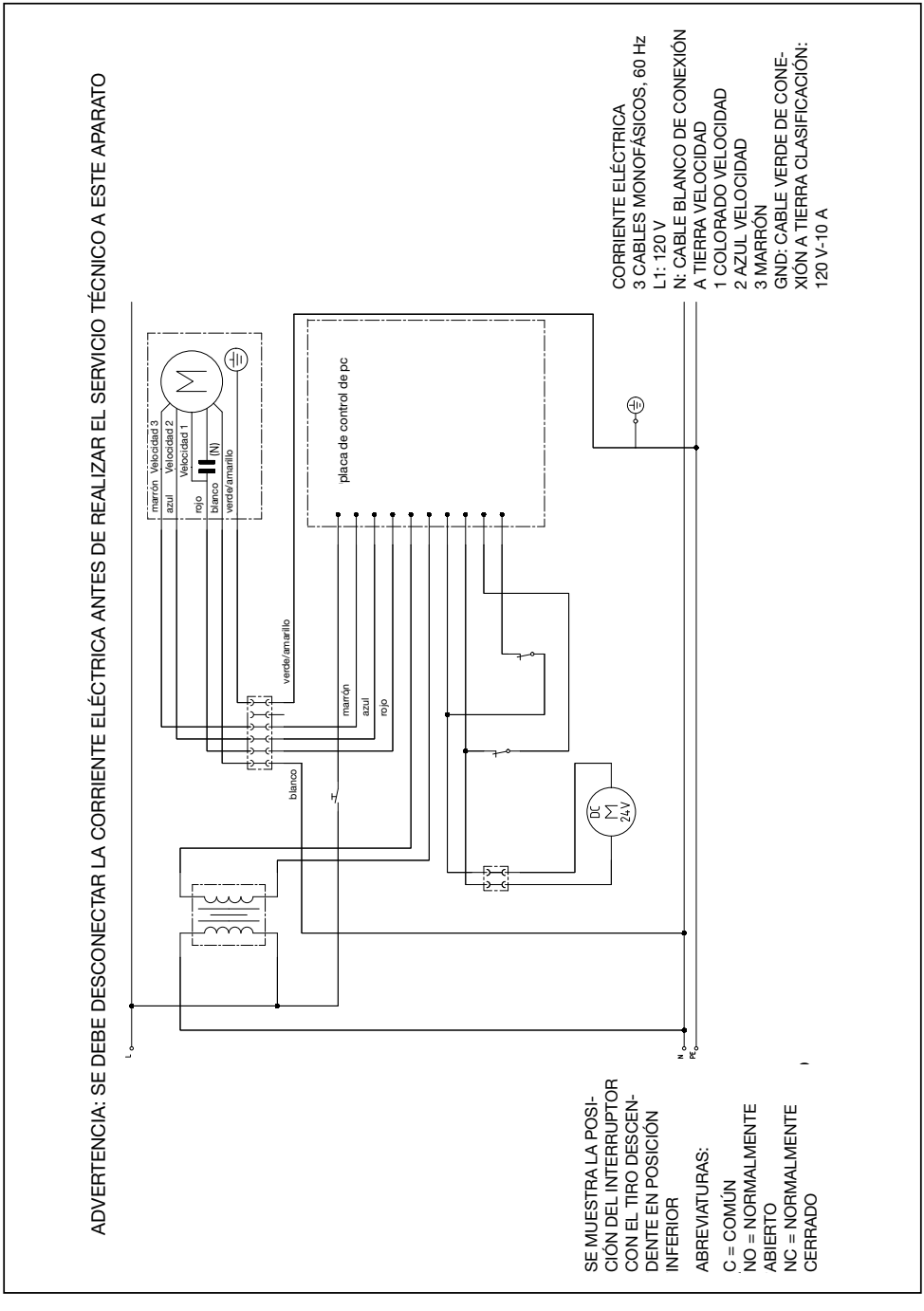

Fig. 11

Paso 8: Verificar la instalación, operación y alineación de la parrilla

- ☐ Antes de realizar este procedimiento, se debe verificar que se hayan quitado todos los materiales de empaque del interior del tubo de respiración y que se hayan instalado correctamente los filtros de grasa y el panel delantero. Consultar el manual de uso y cuidado para las instrucciones con respecto a la instalación de los filtros y del panel delantero.
- ☐ Enchufar el cable de alimentación de la ventilación a un receptáculo eléctrico apropiado y asegurar que el circuito esté activado.
- ☐ A. Levantar el tubo de respiración a su máxima posición extendida presionando una vez el botón UP/DOWN (Arriba/Abajo). No se debe mantener pulsado el botón. El motor de elevación se detendrá cuando el tubo de respiración alcance su altura máxima. (Nota: el ventilador no va a funcionar, a menos que se eleve completamente el tubo de respiración).
- ☐ B. Quitar la cinta de protección de la tapa superior.
- ☐ C. Prender el ventilador seleccionando cada una de las 3 velocidades. Dejar que el ventilador funcione varios minutos a cada velocidad para evaluar su operación.
- ☐ D. Con el ventilador funcionando, bajar el tubo de respiración a su máxima posición retraída presionando una vez el botón UP/DOWN (Arriba/Abajo). El ventilador se apagará de inmediato.
- ☐ E. Con el ventilador en la posición HIGH (Alta), cerrar las ventanas y las puertas que comunican con el área para asegurar que el ventilador no cause ningún contratiro en ninguna ventilación de salida para otro aparato.
- ☐ F. Volver a elevar y bajar la ventilación, y revisar que la tapa superior en el tubo de respiración no tenga contacto con el borde trasero de la parrilla cuando se baje. Si hay interferencia, ajustar la posición de la parrilla moviéndola contra el borde delantero de la cubierta. El hecho de no eliminar la interferencia puede causar daños permanentes a la ventilación. Además, asegurar que se hayan fijado correctamente las patas de soporte de la ventilación a la base del gabinete con los tornillos incluidos.

⚠ Si el sistema de ventilación no funciona satisfactoriamente durante cualquiera de los procedimientos anteriores, revisar todos los pasos de estas instrucciones de instalación para asegurar que no se haya omitido o pasado por alto algo. Además, se puede consultar el manual de uso y cuidado para mayor información o llamar al centro de soporte al cliente de Thermador marcando 1-800-735-4328.

Nota: Marcar las casillas a medida que se completen las tareas.

Notes

BOSCH

YOUR LIFE. OUR INSPIRATION.

5551 McFadden Avenue, Huntington Beach, CA 92649 • 1-800-944-2904 • www.boschappliances.com
10019 Rev B • 04/08 © BSH Home Appliances Corporation 2005 • Litho U.S.A.

9000 445 343
Printed in Germany 0309 Es.

30" Downdraft

Downdraft Ventilation – Stainless Steel DHD3014UC

BOSCH
Invented for life

DHD3014UC
Stainless Steel

The perfect solution for high ceilings, islands, or simply for space considerations, our downdraft rises from behind your cooktop.

Features & Benefits

- Allows you to adjust the performance of your hood to match the type of cooking.
- The filter is concealed behind a stylish stainless steel cover to hide grease build up.
- Flexible design gives the ability to recirculate the air back into the kitchen.
- With the touch of the controls, chimney will automatically rise to over 13", and after use chimney lowers flush with the cooking surface.
- 600 CFM blowers available for remote, inline, and internal applications.

General Properties	
Operating mode	Convertible: ducted / recirculating
Maximum CFM	Blower Sold Separately
Number of speed settings	3-stage
Motor location	External
Damper included	Yes
Grease filter material	Washable stainless steel
Grease filter type	Multilayer cassette

Technical Details	
Volts (V)	120 V
Frequency (Hz)	60 Hz
Plug type	120V-3 prong
Power cord length (in.)	30"

Dimensions & Weight	
Overall appliance dimensions (width of canopy included) (HxWxD) (in.)	21 5/8" x 31" x 3 3/4"
Height of the rise (in.)	13"
Diameter of air duct (in.) top	10"
Net weight (lbs)	37 lbs

Accessories—Optional

DHZDHR6
6" duct transition

NOTE: Required with the installation of inline and remote blowers for downdraft applications only. DHZDHR6 is for 600 CFM which will improve overall performance.

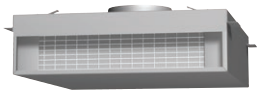

DHDRM36UC
Recirculation kit

DHG601DUC
600 CFM Internal Blower

DHG6015NUC
600 CFM Inline Blower

DHG6023RUC
600 CFM Remote Blower

For help and assistance with Bosch accessories please visit: www.bosch-eshop.com/eshop/bosch/us or call 1-800-944-2904 Mon-Fri 5am to 6pm PST Sat 6am to 3pm PST

Notes: All height, width and depth dimensions are shown in inches. BSH reserves the absolute and unrestricted right to change product materials and specifications, at any time, without notice. Consult the product's installation instructions for final dimensional data and other details prior to making cutout. Applicable product warranty can be found in accompanying product literature or you may contact your account manager for further details.

Warranties: Bosch warrants that the Product is free from defects in materials and workmanship for a period of three hundred and sixty-five (365) days from the date of purchase. The foregoing timeline begins to run upon the date of purchase, and shall not be stalled, tolled, extended, or suspended, for any reason whatsoever. This Product is also warranted to be free from cosmetic defects in material and workmanship (such as scratches of stainless steel, paint/porcelain blemishes, chip, dents, or other damage) to the finish of the Product, for a period of thirty (30) days from the date of purchase or closing date for new construction. This cosmetic warranty excludes slight color variations due to inherent differences in painted and porcelain parts, as well as differences caused by kitchen lighting, product location, or other similar factors. This cosmetic warranty specifically excludes any display, floor, "As Is", or "B" stock appliances.

For more information on our entire line of products, go to www.bosch-home.com/us or call 1-800-944-2904

© BSH Home Appliances Corporation. All rights reserved. Bosch is a registered trademark of Robert Bosch GmbH.

30" Downdraft

Downdraft Ventilation – Stainless Steel DHD3014UC

Installation Details

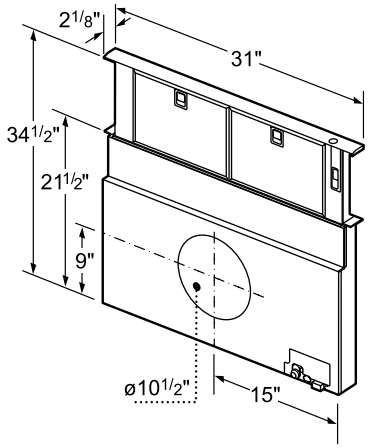

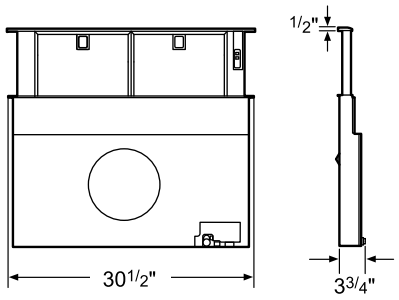

Measurements in inches

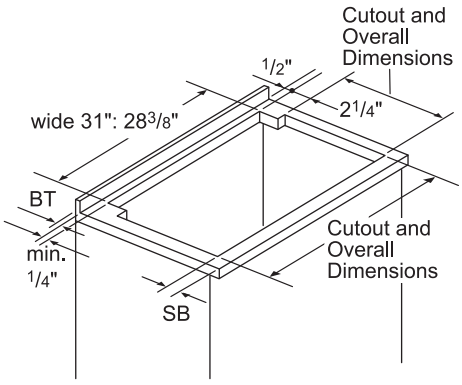

measurements in inches

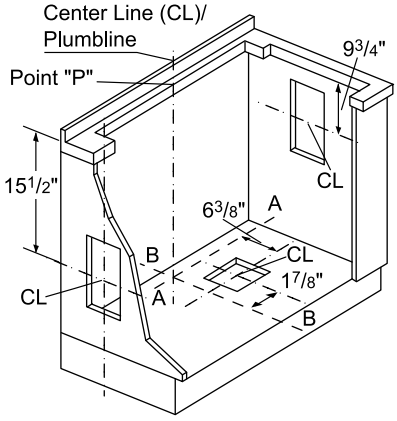

measurements in inches

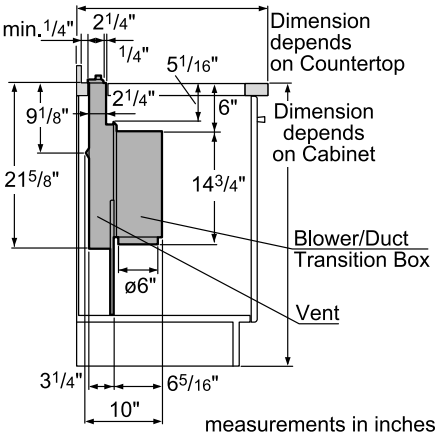

measurements in inches

For help and assistance with Bosch accessories please visit: www.bosch-eshop.com/eshop/bosch/us or call 1-800-944-2904 Mon-Fri 5am to 6pm PST Sat 6am to 3pm PST

Notes: All height, width and depth dimensions are shown in inches. BSH reserves the absolute and unrestricted right to change product materials and specifications, at any time, without notice. Consult the product's installation instructions for final dimensional data and other details prior to making cutout. Applicable product warranty can be found in accompanying product literature or you may contact your account manager for further details.

Warranties: Bosch warrants that the Product is free from defects in materials and workmanship for a period of three hundred and sixty-five (365) days from the date of purchase. The foregoing timeline begins to run upon the date of purchase, and shall not be stalled, tolled, extended, or suspended, for any reason whatsoever. This Product is also warranted to be free from cosmetic defects in material and workmanship (such as scratches of stainless steel, paint/porcelain blemishes, chip, dents, or other damage) to the finish of the Product, for a period of thirty (30) days from the date of purchase or closing date for new construction. This cosmetic warranty excludes slight color variations due to inherent differences in painted and porcelain parts, as well as differences caused by kitchen lighting, product location, or other similar factors. This cosmetic warranty specifically excludes any display, floor, "As Is", or "B" stock appliances.

For more information on our entire line of products, go to www.bosch-home.com/us or call 1-800-944-2904

© BSH Home Appliances Corporation. All rights reserved. Bosch is a registered trademark of Robert Bosch GmbH.

18" Recessed Handle Special Application

300 Series – Stainless Steel SPE53U55UC

BOSCH
Invented for life

SPE53U55UC
Stainless Steel

Also available in:

White	SPE53U52UC
Black	SPE53U56UC

Bosch dishwashers incorporate 18 unique sound-reducing technologies, to make Bosch the quietest dishwasher brand in the US.

Features & Benefits
46 dBA: Quietest dishwasher brand.
Water softener ensures optimally spot-free and shiny dishes.
RackMatic® offers 3 height levels, for 9 possible rack positions.
AquaStop® Plus 4-Part leak protection prevents water damage 24/7.
24h Delay Start Timer lets you run your dishwasher at off-peak times.

General Properties	
Number of wash cycles	4
Number of options	4
dBA	46
Third rack	No
Rack adjustability	RackMatic®
Tub material	Stainless steel
Control type	Buttons
Concealed heating element	Yes
Leak protection system	24/7 AquaStop® Plus
Water softener	Yes
Five-level wash	Yes
ChildLock	Yes
Special features	24h delay start timer

Efficiency	
Water usage per cycle	3.0
Energy efficiency class	Tier 1
ENERGY STAR® qualified	Yes
Total annual energy consumption (kWh)	259 kWh
Total annual water consumption (g)	645

Capacity	
Number of place settings	9

Technical Details	
Watts (W)	1300 W
Current (A)	12 Amps
Volts (V)	120 V
Frequency (Hz)	60 Hz
Power cord length	68 7/8"
Minimum water pressure (lb/sin)	7
Length inlet hose (in)	65"
Length outlet hose (in)	80 5/8"

Dimensions & Weight	
Overall appliance dimensions (HxWxD) (in)	32 1/16" x 17 5/8" x 22 9/16"
Required cutout size (HxWxD) (in)	32 1/8" x 17 3/4" x 24"
Adjustable feet	Yes
Net weight (lbs)	72 lbs

Accessories—Optional	
Dishwasher Softener Salt (4.4 lbs)	SGZ9092UC
Dishwasher Drain Hose Extension 76 3/4"	SGZ1010UC
Dishwasher Accessory Kit	SMZ5000
Hinge for 4" Toekick Height Installation	SMZ5003

For help and assistance with Bosch accessories please visit: www.bosch-eshop.com/eshop/bosch/us or call 1-800-944-2904 Mon-Fri 5am to 6pm PST Sat 6am to 3pm PST

Notes: All height, width and depth dimensions are shown in inches. BSH reserves the absolute and unrestricted right to change product materials and specifications, at any time, without notice. Consult the product's installation instructions for final dimensional data and other details prior to making cutout. Applicable product warranty can be found in accompanying product literature or you may contact your account manager for further details.

Warranties: Bosch warrants that the Product is free from defects in materials and workmanship for a period of three hundred and sixty-five (365) days from the date of purchase. The foregoing timeline begins to run upon the date of purchase, and shall not be stalled, tolled, extended, or suspended, for any reason whatsoever. This Product is also warranted to be free from cosmetic defects in material and workmanship (such as scratches of stainless steel, paint/porcelain blemishes, chip, dents, or other damage to the finish) of the Product, for a period of thirty (30) days from the date of purchase or closing date for new construction. This cosmetic warranty excludes slight color variations due to inherent differences in painted and porcelain parts, as well as differences caused by kitchen lighting, product location, or other similar factors. This cosmetic warranty specifically excludes any display, floor, "As Is", or "B" stock appliances.

For more information on our entire line of products, go to www.bosch-home.com/us or call 1-800-944-2904

© BSH Home Appliances Corporation. All rights reserved. Bosch is a registered trademark of Robert Bosch GmbH.

18" Recessed Handle Special Application

300 Series – Stainless Steel SPE53U55UC

BOSCH
Invented for life

Installation Details

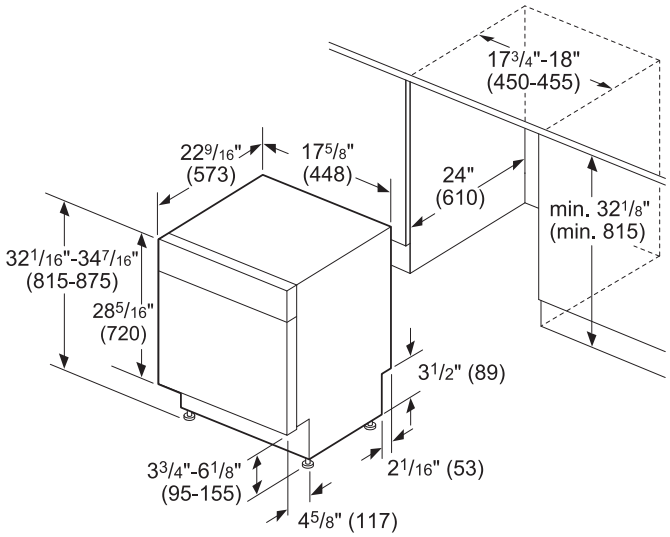

measurements in inches (mm)

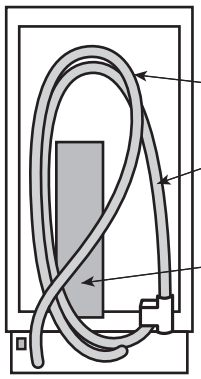

Included:

Pre-connected drain hose

Pre-connected AquaStop® inlet hose

Toe-kick

Power cord with junction box

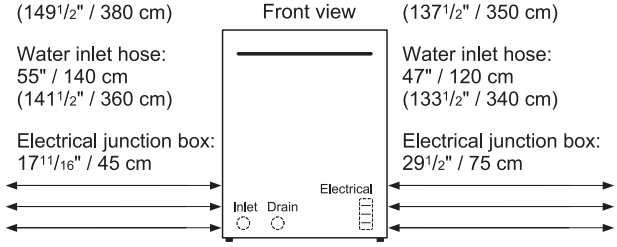

All connections at the rear of the appliance.
( ) values with extension kit.

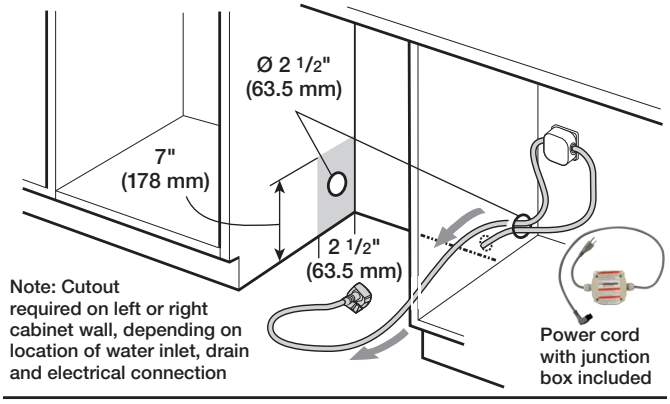

Example of Hardwire Installation

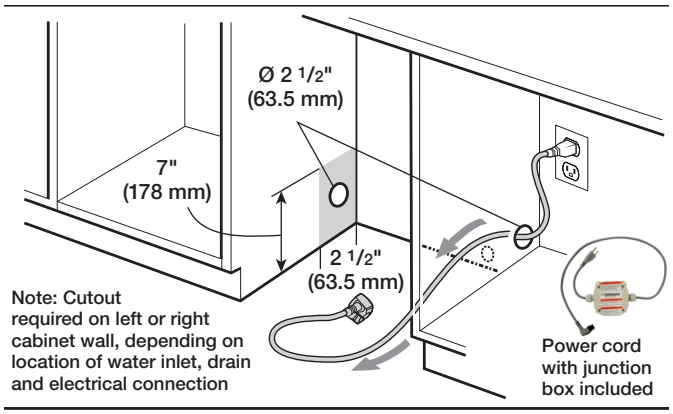

Example of an Electrical Receptacle Installation

For help and assistance with Bosch accessories please visit: www.bosch-eshop.com/eshop/bosch/us or call 1-800-944-2904 Mon-Fri 5am to 6pm PST Sat 6am to 3pm PST

Notes: All height, width and depth dimensions are shown in inches. BSH reserves the absolute and unrestricted right to change product materials and specifications, at any time, without notice. Consult the product's installation instructions for final dimensional data and other details prior to making cutout. Applicable product warranty can be found in accompanying product literature or you may contact your account manager for further details.

Warranties: Bosch warrants that the Product is free from defects in materials and workmanship for a period of three hundred and sixty-five (365) days from the date of purchase. The foregoing timeline begins to run upon the date of purchase, and shall not be stalled, tolled, extended, or suspended, for any reason whatsoever. This Product is also warranted to be free from cosmetic defects in material and workmanship (such as scratches of stainless steel, paint/porcelain blemishes, chip, dents, or other damage to the finish) of the Product, for a period of thirty (30) days from the date of purchase or closing date for new construction. This cosmetic warranty excludes slight color variations due to inherent differences in painted and porcelain parts, as well as differences caused by kitchen lighting, product location, or other similar factors. This cosmetic warranty specifically excludes any display, floor, "As Is", or "B" stock appliances.

For more information on our entire line of products, go to www.bosch-home.com/us or call 1-800-944-2904

© BSH Home Appliances Corporation. All rights reserved. Bosch is a registered trademark of Robert Bosch GmbH.

18" Recessed Handle Special Application

300 Series – Stainless Steel SPE53U55UC

BOSCH
Invented for life

Installation Details

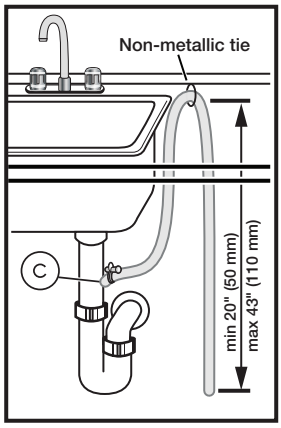

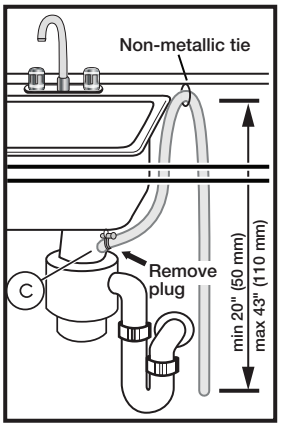

Note: Plumbing installations will vary - refer to local codes. Drain hose included is 88 5/8" (225 cm) and can be extended to a maximum of 165 3/8" (420 cm).

Always use the approved drain hose extension kit (SGZ1010UC).

Ensure a portion of the drain hose is raised between min. 20" (50 cm) and max. 43" (110 cm) above the cabinet floor.

For help and assistance with Bosch accessories please visit: www.bosch-eshop.com/eshop/bosch/us or call 1-800-944-2904 Mon-Fri 5am to 6pm PST Sat 6am to 3pm PST

Notes: All height, width and depth dimensions are shown in inches. BSH reserves the absolute and unrestricted right to change product materials and specifications, at any time, without notice. Consult the product's installation instructions for final dimensional data and other details prior to making cutout. Applicable product warranty can be found in accompanying product literature or you may contact your account manager for further details.

Warranties: Bosch warrants that the Product is free from defects in materials and workmanship for a period of three hundred and sixty-five (365) days from the date of purchase. The foregoing timeline begins to run upon the date of purchase, and shall not be stalled, tolled, extended, or suspended, for any reason whatsoever. This Product is also warranted to be free from cosmetic defects in material and workmanship (such as scratches of stainless steel, paint/porcelain blemishes, chip, dents, or other damage to the finish) of the Product, for a period of thirty (30) days from the date of purchase or closing date for new construction. This cosmetic warranty excludes slight color variations due to inherent differences in painted and porcelain parts, as well as differences caused by kitchen lighting, product location, or other similar factors. This cosmetic warranty specifically excludes any display, floor, "As Is", or "B" stock appliances.

For more information on our entire line of products, go to www.bosch-home.com/us or call 1-800-944-2904

© BSH Home Appliances Corporation. All rights reserved. Bosch is a registered trademark of Robert Bosch GmbH.

ASKO
Inspired by Scandinavia

MODEL D5436XLS

ENERGY STAR

FEATURES

- Integrated handle and front controls
- TouchProof™ stainless steel
- Turbo Drying™ system
- 16 place-setting capacity
- Quiet operation—46 dB(A)
- 9Spray™ wash system; separate spray nozzles clean pot & pans and continuously spray cutlery basket
- 6 wash programs
- Delayed start—up to 24 hours
- Heavy-duty stainless steel construction with nylon-coated steel racks
- Touch screen display
- Remaining time and program end indicator
- ADA height compliant

INTERIOR FEATURES

- Top tray with Instant Lift™
- Premium upper rack
- Premium lower rack

PROGRAMS

- Sanitation Wash
- Normal Wash
- Heavy Wash
- Quick Wash
- Eco Wash
- Rinse and Hold

ASKO
Inspired by Scandinavia

PRODUCT SPECIFICATIONS

Model	D5436XLS
Width	23 7/8"
Height	32 3/4"**– 34 3/4"
Depth	22 7/8"
Door Clearance	24 5/8"
Weight	112 lb
Max Loading Height Upper Rack	9"
Max Loading Height Lower Rack	12 1/4"
Electrical Supply	115 VAC, 60 Hz
Electrical Service	15 amp circuit
Plumbing Supply	1/4" OD copper, braided stainless steel or PEX tubing
Pressure	4.2–140 psi

Electrical supply, plumbing supply and drain should be located in an adjacent cabinet. If not, they must be located within the shaded area shown in the illustrations below.

ELECTRICAL | PLUMBING

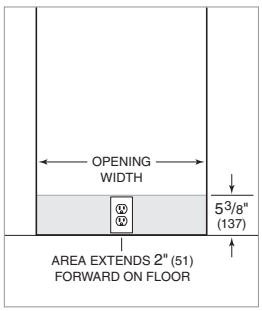

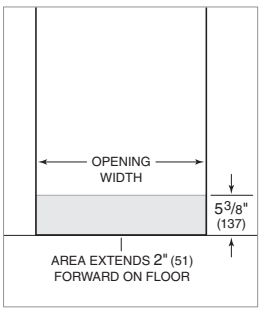

DIMENSIONS

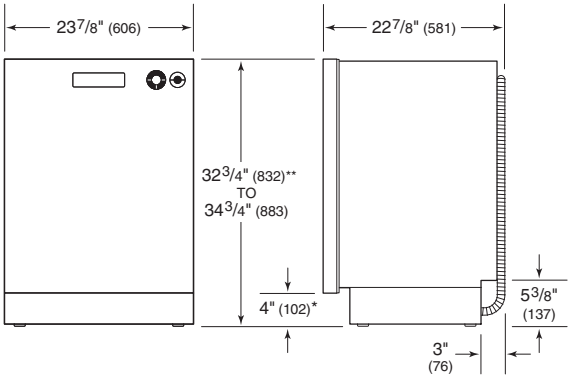

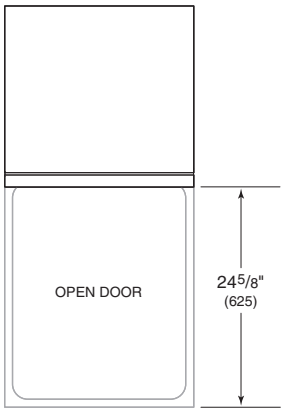

**Dimension will vary with product height.*
***Can be reduced to 32 1/4" (819) by removing top trim and lowering side trim.*

INSTALLATION

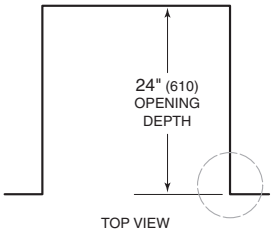

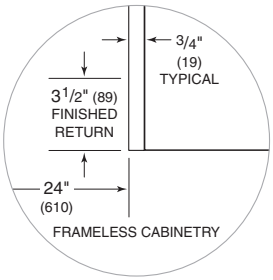

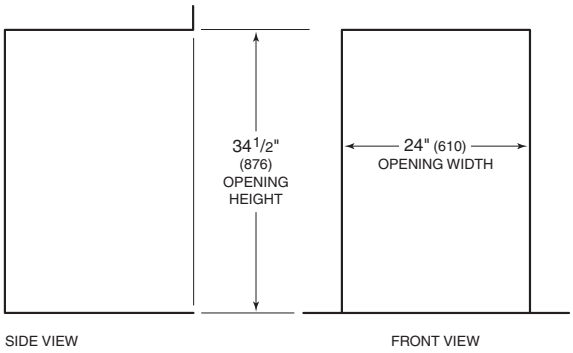

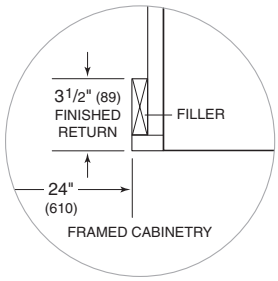

NOTE: 3 1/2" (89) finished returns will be visible and should be finished to match cabinetry.

30" Over-the-Range Convection Microwave

800 Series – Stainless Steel HMV8053U

BOSCH
Invented for life

HMV8053U
Stainless Steel

The OTR microwave's convection cooking capability allows it to be used as a second oven.

Features & Benefits
Convection cooking delivers oven-like results.
Stainless steel cavity is durable and makes cleanup easier.
Large cooking interior gives you flexibility to cook various dishes.
A multi-speed vent efficiently removes steam, smoke, grease and odors.
The OTR microwave is designed to install with a Bosch slide-in range or cooktop.

General Properties	
Cavity material	Stainless steel
Max. microwave power (W)	1,000 W
Max. extraction rate (CFM)	385 CFM
Ducted	Yes
Ductless	Yes
Duct size	3 1/4" x 10"
Capacity	
Cavity capacity (cu. ft.)	1.8 cu. ft.
Turntable diameter (in.)	14 3/16"
Technical Details	
Watts (W)	1,450 W
Circuit breaker (A)	15 A
Volts (V)	120 V
Frequency (Hz)	60 Hz
Power cord length (in)	39"
Plug type	120V-3 prong

Dimensions & Weight	
Overall appliance dimensions (HxWxD) (in)	17 1/2" x 29 7/8" x 15 7/8"
Required cutout size (HxWxD) (in)	16 1/2" Min x 30" x 12" Min - 14" Max
Net weight (lbs)	54 lbs
Accessories–Included	
Included	Two level cooking rack

For help and assistance with Bosch accessories please visit: www.bosch-eshop.com/eshop/bosch/us or call 1-800-944-2904 Mon-Fri 5am to 6pm PST Sat 6am to 3pm PST

Notes: All height, width and depth dimensions are shown in inches. BSH reserves the absolute and unrestricted right to change product materials and specifications, at any time, without notice. Consult the product's installation instructions for final dimensional data and other details prior to making cutout. Applicable product warranty can be found in accompanying product literature or you may contact your account manager for further details.

Warranties: Bosch warrants that the Product is free from defects in materials and workmanship for a period of three hundred and sixty-five (365) days from the date of purchase. The foregoing timeline begins to run upon the date of purchase, and shall not be stalled, tolled, extended, or suspended, for any reason whatsoever. This Product is also warranted to be free from cosmetic defects in material and workmanship (such as scratches of stainless steel, paint/porcelain blemishes, chip, dents, or other damage) to the finish of the Product, for a period of thirty (30) days from the date of purchase or closing date for new construction. This cosmetic warranty excludes slight color variations due to inherent differences in painted and porcelain parts, as well as differences caused by kitchen lighting, product location, or other similar factors. This cosmetic warranty specifically excludes any display, floor, "As Is", or "B" stock appliances.

For more information on our entire line of products, go to www.bosch-home.com/us or call 1-800-944-2904

© BSH Home Appliances Corporation. All rights reserved. Bosch is a registered trademark of Robert Bosch GmbH.

30" Over-the-Range Convection Microwave

800 Series – Stainless Steel HMV8053U

BOSCH
Invented for life

Installation Details

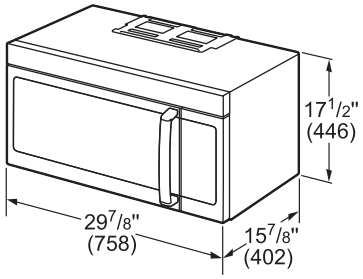

measurements in inches (mm)

Venting Options

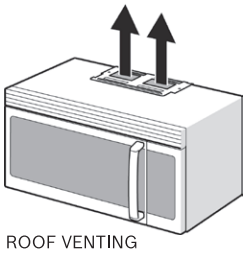

ROOF VENTING

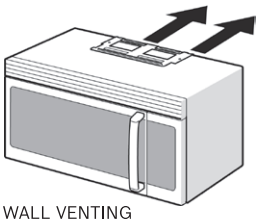

WALL VENTING

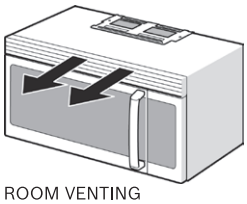

ROOM VENTING

Electrical Connection

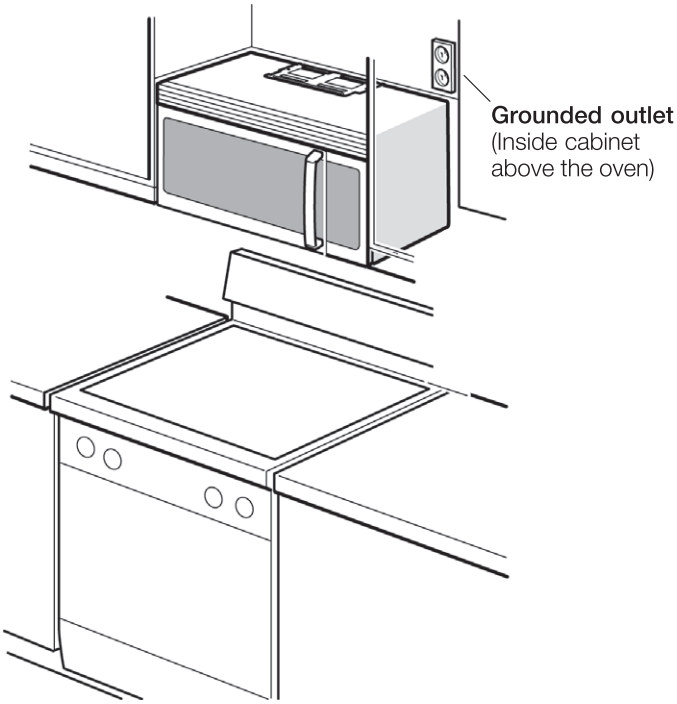

Clearance Above Cooktop

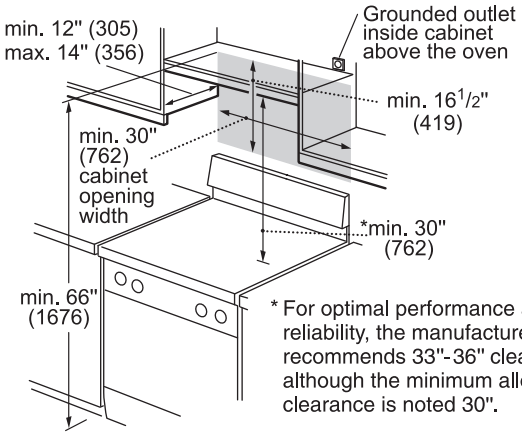

* For optimal performance and reliability, the manufacturer recommends 33"-36" clearance, although the minimum allowable clearance is noted 30".

measurements in inches (mm)

For help and assistance with Bosch accessories please visit: www.bosch-eshop.com/eshop/bosch/us or call 1-800-944-2904 Mon-Fri 5am to 6pm PST Sat 6am to 3pm PST

Notes: All height, width and depth dimensions are shown in inches. BSH reserves the absolute and unrestricted right to change product materials and specifications, at any time, without notice. Consult the product's installation instructions for final dimensional data and other details prior to making cutout. Applicable product warranty can be found in accompanying product literature or you may contact your account manager for further details.

Warranties: Bosch warrants that the Product is free from defects in materials and workmanship for a period of three hundred and sixty-five (365) days from the date of purchase. The foregoing timeline begins to run upon the date of purchase, and shall not be stalled, tolled, extended, or suspended, for any reason whatsoever. This Product is also warranted to be free from cosmetic defects in material and workmanship (such as scratches of stainless steel, paint/porcelain blemishes, chip, dents, or other damage) to the finish of the Product, for a period of thirty (30) days from the date of purchase or closing date for new construction. This cosmetic warranty excludes slight color variations due to inherent differences in painted and porcelain parts, as well as differences caused by kitchen lighting, product location, or other similar factors. This cosmetic warranty specifically excludes any display, floor, "As Is", or "B" stock appliances.

For more information on our entire line of products, go to www.bosch-home.com/us or call 1-800-944-2904

© BSH Home Appliances Corporation. All rights reserved. Bosch is a registered trademark of Robert Bosch GmbH.

24" Built-In Microwave Oven

500 Series – Stainless Steel HMB5051

BOSCH
Invented for life

HMB5051
Stainless Steel

Also available in:

Black HMB5061

Built-In microwave design matched for use in combination with Bosch wall oven.

Features & Benefits

- Large Cooking Interior Gives You More Flexibility in What Types of Dishes You Can Cook.
- Built For Speed and Convenience With 1200 Watts of Microwave Cooking Power.
- Convenient Automatic Sensor Programs Simplify Cooking for Great Results Every Time.

General Properties	
Cavity color	White
Max. microwave power (W)	1,200 W
Capacity	
Cavity capacity (cu. ft.)	2.1 cu. ft.
Turntable diameter (in.)	16 1/2"
Technical Details	
Watts (W)	1,460 W
Circuit breaker (A)	20 A
Volts (V)	120 V
Frequency (Hz)	60 Hz
Power cord length (in)	41 5/16"
Plug type	120V-3 prong

Dimensions & Weight	
Overall appliance dimensions (HxWxD) (in)	14" x 23 7/8" x 19 7/16"
Required cutout size (HxWxD) (in)	19 7/8" X 25 7/16 – 28 7/16" X 21"
Net weight (lbs)	34 lbs
Accessories–Included	
Included	Glass turntable

Accessories–Optional

HMT5751
27" Stainless steel trim kit

HMT5051
30" Stainless steel trim kit

For help and assistance with Bosch accessories please visit: www.bosch-eshop.com/eshop/bosch/us or call 1-800-944-2904 Mon-Fri 5am to 6pm PST Sat 6am to 3pm PST

Notes: All height, width and depth dimensions are shown in inches. BSH reserves the absolute and unrestricted right to change product materials and specifications, at any time, without notice. Consult the product's installation instructions for final dimensional data and other details prior to making cutout. Applicable product warranty can be found in accompanying product literature or you may contact your account manager for further details.

Warranties: Bosch warrants that the Product is free from defects in materials and workmanship for a period of three hundred and sixty-five (365) days from the date of purchase. The foregoing timeline begins to run upon the date of purchase, and shall not be stalled, tolled, extended, or suspended, for any reason whatsoever. This Product is also warranted to be free from cosmetic defects in material and workmanship (such as scratches of stainless steel, paint/porcelain blemishes, chip, dents, or other damage) to the finish of the Product, for a period of thirty (30) days from the date of purchase or closing date for new construction. This cosmetic warranty excludes slight color variations due to inherent differences in painted and porcelain parts, as well as differences caused by kitchen lighting, product location, or other similar factors. This cosmetic warranty specifically excludes any display, floor, "As Is", or "B" stock appliances.

For more information on our entire line of products, go to www.bosch-home.com/us or call 1-800-944-2904

© BSH Home Appliances Corporation. All rights reserved. Bosch is a registered trademark of Robert Bosch GmbH.

24" Built-In Microwave Oven

500 Series – Stainless Steel HMB5051

BOSCH
Invented for life

Installation Details

Product Dimensions

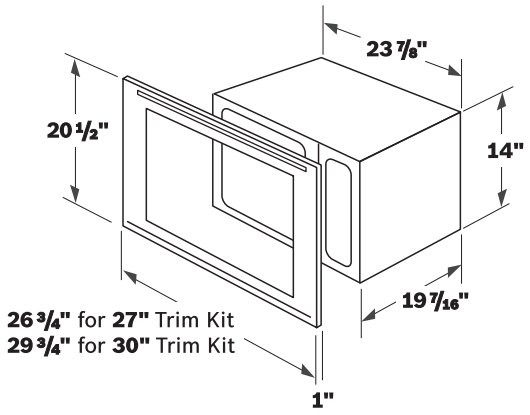

measurements in inches

Standard Installation

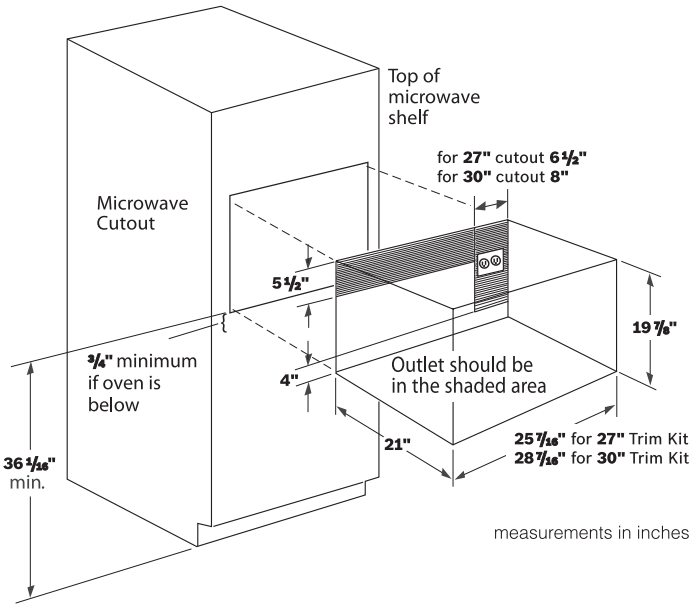

measurements in inches

Installation with 30" Trim Kit Over SIngle Oven

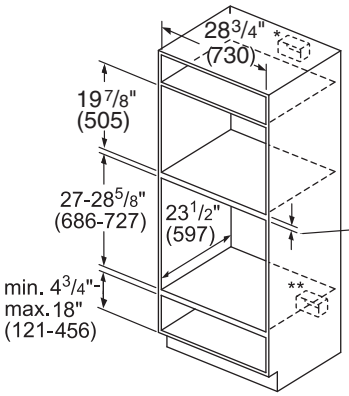

*Junction box may be located above or next to the unit within the reach of the power cord.

**Junction box may be located below (depending on space) or next to the unit within the reach of the power cord.

7/8"(22) support base required

Note: The microwave trim will overlap 3/8" (9) on the bottom edge, beyond the support base.

measurements in inches (mm)

For help and assistance with Bosch accessories please visit: www.bosch-eshop.com/eshop/bosch/us or call 1-800-944-2904 Mon-Fri 5am to 6pm PST Sat 6am to 3pm PST

Notes: All height, width and depth dimensions are shown in inches. BSH reserves the absolute and unrestricted right to change product materials and specifications, at any time, without notice. Consult the product's installation instructions for final dimensional data and other details prior to making cutout. Applicable product warranty can be found in accompanying product literature or you may contact your account manager for further details.

Warranties: Bosch warrants that the Product is free from defects in materials and workmanship for a period of three hundred and sixty-five (365) days from the date of purchase. The foregoing timeline begins to run upon the date of purchase, and shall not be stalled, tolled, extended, or suspended, for any reason whatsoever. This Product is also warranted to be free from cosmetic defects in material and workmanship (such as scratches of stainless steel, paint/porcelain blemishes, chip, dents, or other damage) to the finish of the Product, for a period of thirty (30) days from the date of purchase or closing date for new construction. This cosmetic warranty excludes slight color variations due to inherent differences in painted and porcelain parts, as well as differences caused by kitchen lighting, product location, or other similar factors. This cosmetic warranty specifically excludes any display, floor, "As Is", or "B" stock appliances.

For more information on our entire line of products, go to www.bosch-home.com/us or call 1-800-944-2904

© BSH Home Appliances Corporation. All rights reserved. Bosch is a registered trademark of Robert Bosch GmbH.

SECTION 12 36 00

Paperstone (Countertop) 24" W

PaperStone
Technical Specs

PaperStone™ 'Original' (made from 100% FSC Certified post-consumer recycled cardboard) and PaperStone™ 'Certified' (made from 100% FSC Certified post-consumer recycled office paper) are saturated with our PetroFree, water-based phenolic resin (made with natural materials like cashew nut shell liquid) and pigment. Heat and pressure transform this mixture into a thoroughly impregnated network of cellulose fibers that give PaperStone™ its hardness, density and strength in span or cantilevered designs.

PaperStone™ Specifications

Water absorption (by weight)		0.82%
Density		1.4-1.45 (g/cm3)
Internal bond		1,225 (psi)
Modulus of rupture (flexibility)		
Face		
	X direction	24,320 psi
	Y direction	24,080 psi
Edge		
	X direction	21,834 psi
	Y direction	21,413 psi
Modulus of Elasticity		
	X direction	1724.25 ksi
	Y direction	1666.58 ksi
Compressive strength		
	Z direction (face)	45,324 psi
	X direction	23,200 psi
	Y direction	22,560 psi
Coefficient of Thermal Expansion		
	Z direction	2.62
	X direction	3.64
	Y direction	3.48
Izod impact strength		
Face		
	X direction (ft/lb/inch-width)	3.29
	Y direction (ft/lb/inch-width)	2.76
Edge		
	X direction (ft/lb/inch-width)	.73
	Y direction (ft/lb/inch-width)	.75
Hardness test		
Barcol meter (Barber Coleman)		47 avg.
UV exposure	Slight darkening for light colors, dark colors are stable	
Formaldehyde	No detected residues (less than 1 part per million)	

ASTM E84 Fire Test Results

Flamespread Index:	(20) Class A Rating
Smoke Developed Index:	(110) Class A Rating

PaperStone™
The Earth's Surface™

paperstone products.com | 360.538.9815

SECTION 12 44 00

Towel Rack Hand Towel

see what Delta can do℠

Trinsic™

TEMPLATE / GABARIT / PLANTILLA

PRIMARY POST MOUNT
MONTANT PRINCIPAL
MONTAJE DEL POSTE PRINCIPAL

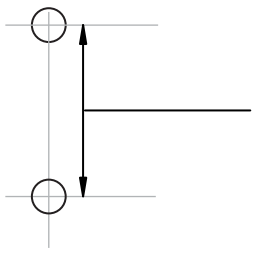

Items Required for Installation:
Articles nécessaires pour l'installation:
Artículos requeridos para la instalación:

Wear Safety goggles
Portez des lunettes de sécurité
Use gafas de seguridad

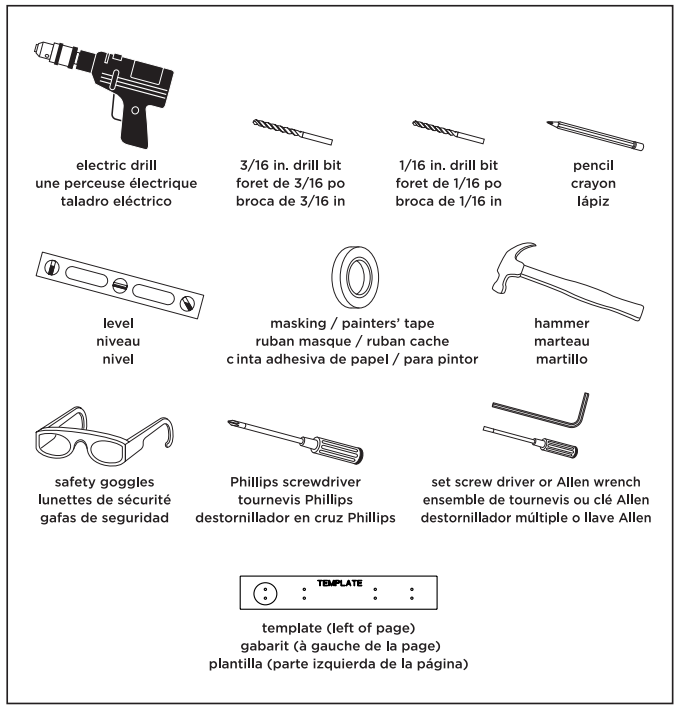

Installation Instructions / Instructions pour l'installation / Instrucciones de instalación:

1

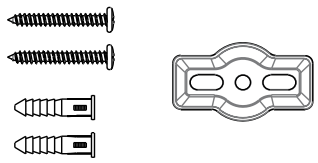

Locate mounting hardware before discarding any packaging.

Trouvez la visserie de montage avant de jeter l'emballage.

Localice los accesorios de montaje antes de desechar cualquier empaque.

2

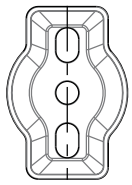

Position bracket on wall in desired location making sure that it is level.

Positionnez le support sur le mur à l'emplacement désiré, en vérifiant qu'il est à niveau.

Coloque el soporte en la pared en la ubicación deseada asegurándose de que esté nivelada.

3

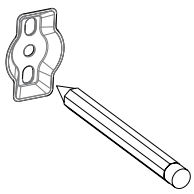

Mark (on the wall) locations of fasteners thru bracket using a pencil.

Marquez (sur le mur) les emplacements des dispositifs de fixation à travers le support à l'aide d'un crayon

Marque (en la pared) las ubicaciones de los sujetadores a través de el soporte usando un lápiz. .

4A **For Sheetrock with Wood Wall Stud**
Pour les panneaux de gypse avec des montants de cloison en bois
Para paneles de yeso con vigas de pared de madera

4A – Locate Studs before drilling.

If Solid Wood or Stud Installation: drill 1/16" holes, be sure to keep drill level. Anchors will not be required.

Trouvez l'emplacement des montants de cloison avant de percer. Pour une installation dans du bois plein ou un montant de cloison : percez des trous de 1/16 po en vous assurant de garder la perceuse à niveau. Des chevilles ne seront pas nécessaires.

Localice las vigas antes de taladrar. Si se va a realizar una instalación en madera sólida o una viga: taladre agujeros de 1,16"; asegúrese de mantener nivelado el taladro. No se necesitarán anclas.

OR

OU

O

4B **For Sheetrock without Wood Wall Stud**
Pour les panneaux de gypse sans des montants de cloison en bois
Para paneles de yeso sin vigas de pared de madera

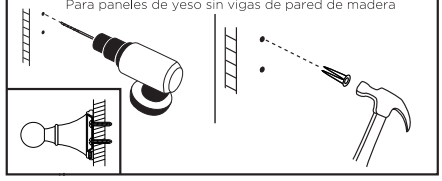

4B – If Sheetrock or Ceramic tile Installation: drill 3/16" holes, be sure to keep drill level. Insert anchors into drilled holes using a hammer to tap the anchors in. Be careful not to break tile.

Pour une installation sur un panneau de gypse ou des carreaux de céramique : percez des trous de 3/16 po en vous assurant de garder la perceuse à niveau. Insérez des chevilles dans les trous à l'aide d'un marteau pour les enfoncer. Faites attention de ne pas casser le carreau.

Si se va a realizar una instalación en panel de yeso o baldosa cerámica: taladre agujeros de 3/16"; asegúrese de mantener nivelado el taladro. Inserte las anclas dentro de los agujeros taladrados usando un martillo para empujarlas hacia adentro. Tenga cuidado de no romper la baldosa.

5

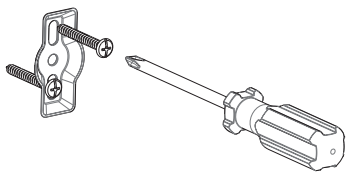

Attach brackets (confirm that clips face outward) to wall with fasteners provided and secure through drilled holes. Confirm that brackets are level.

Fixez les supports (vérifiez que les agrafes sont vers l'extérieur) au mur avec les attaches fournies et fixez dans les trous percés. Confirmez que les supports sont à niveau.

Acople los soportes (confirme que las abrazaderas queden hacia fuera) a la pared con los sujetadores proporcionados y asegúrelos a través de los agujeros taladrados. Confirme que los soportes estén nivelados.

6

Loosen set screws to fit over wall mounting brackets. Slip the assembled product over the mounting brackets with the set screw(s) located at the bottom of the post. The posts must hook over the mounting brackets. Push flush with wall and tighten set screws.

Desserrez les vis de pression pour pouvoir entrer sur tous les supports de montage. Glissez le produit assemblé sur les supports de montage avec les vis de pression situées en bas du montant. Les montants doivent s'accrocher aux supports de montage. Poussez contre le mur et serrez les vis de pression.

Afloje los tornillos de fijación sobre los soportes de montaje. Deslice el producto ensamblado sobre los soportes de montaje con el(los) tornillo(s) localizado(s) en la parte inferior del poste. Los postes deben engancharse sobre los soportes de montaje. Empuje a ras de la pared y apriete los tornillos de fijación.

140 Business Park Drive • Winston-Salem, NC 27107
www.libertyhardware.com

 ©2011 Liberty Hardware Manufacturing Corporation, A MASCO COMPANY

Warning and Care Instructions

⚠ WARNING!
This item is not designed for use as a grab bar. Do not mount in locations where product is likely to be used as a grab bar.

⚠ WARNING!
Use caution when drilling into walls to avoid drilling into electrical and plumbing lines hidden within wall.

Care Instructions:
To maintain and protect the fine luster of all bath accessories, clean with a soft, damp cloth only. **DO NOT** USE scrub pads, detergents or cleansers as they may harm the protective finish of your bath accessories.

Mise en garde et entretien

⚠ MISE EN GARDE !
Cet article n'est pas conçu pour être utilisé comme barre d'appui. Ne pas installer à des endroits où le produit sera probablement utilisé comme une barre d'appui.

⚠ MISE EN GARDE !
Lorsque vous percez dans des murs, faites attention d'éviter de percer dans les conduits électriques ou la plomberie dissimulés dans le mur.

Entretien :
Pour maintenir et protéger le lustre de tous les accessoires de salle de bain les essuyer avec un linge doux et humide. NE PAS UTILISER de tampons à récurer, de détergents ou de produits de nettoyage, car ils pourraient abîmer le fini protecteur de vos accessoires de salle de bain.

Advertencia e Instrucciones de cuidado

⚠ ¡ADVERTENCIA!
Este artículo no está diseñado para usarse como una barra de soporte. N lo monte en ubicaciones donde el producto pudiera ser usado como tal.

⚠ ¡ADVERTENCIA!
Tenga precaución al taladrar las paredes para evitar taladrar tuberías eléctricas o de plomería escondidas dentro de éstas.

Instrucciones de cuidado:
Para mantener y proteger el brillo fino de todos los accesorios de baño, limpie con un paño suave y húmedo solamente. NO USE almohadillas para fregar, detergentes ni limpiadores ya que ellos podrían dañar el acabado protector de sus accesorios de baño.

Warranty Information

Liberty Hardware Manufacturing Corporation
LIMITED LIFETIME WARRANTY

Subject to the terms of this warranty, Liberty Hardware Manufacturing Corporation ("Liberty Hardware") warrants to the original consumer purchaser ("You") that the product will be free from defects in material and workmanship. If the product does not comply with this warranty, Liberty Hardware will repair or replace the product or, at Liberty Hardware's option, refund the purchase price. Repair, replacement, or refund of the original purchase price is your sole remedy under this or any other warranty on the product, whether expressed or implied.

Limited Warranty Period. The warranty period is for the lifetime of the product and begins on the date of the initial installation of the product for residential purposes.

Limitations on the Warranty. The warranty does not cover: (a) normal wear and tear; (b) damage through abuse, neglect, misuse, or as a result of any accident or act of God; (c) improper installation or maintenance; (d) commercial, industrial, institutional or other nonresidential use; or (e) products altered without Liberty Hardware's prior written consent. This warranty is not transferable.

Obligations of Purchaser. If this product does not meet its warranty, return the product (postage prepaid) to the distributor or retailer from which it was purchased with proof of purchase and a written claim briefly describing the defect. You may be required to provide other information or evidence of the defect. Any returned product that is replaced or refunded becomes the property of Liberty Hardware.

Limitations on Implied Warranties. IMPLIED WARRANTIES, INCLUDING ANY WARRANTY OF MERCHANTIBILITY OR FITNESS FOR A PARTICULAR PURPOSE, ARE LIMITED TO THE SAME DURATION AS THIS EXPRESS WARRANTY; OTHERWISE, LIBERTY HARDWARE DISCLAIMS ALL WARRANTIES, EXPRESS OR IMPLIED. Some states do not allow limitations on how long an implied warranty lasts, so the above limitation may not apply to You.

Disclaimer. NO OTHER EXPRESS WARRANTY HAS BEEN MADE OR WILL BE MADE ON BEHALF OF LIBERTY HARDWARE WITH RESPECT TO THE PRODUCT. LIBERTY HARDWARE SHALL NOT BE RESPONSIBLE FOR SPECIAL, INCIDENTAL OR CONSEQUENTIAL DAMAGES WHETHER ARISING OUT OF BREACH OF WARRANTY, BREACH OF CONTRACT, OR OTHERWISE. Some states do not allow the exclusion of incidental or consequential damages of an implied warranty so the above exclusion and limitation may not apply to You.

State Law. This warranty gives you specific legal rights, and You also may have other rights, which vary from state to state.

Renseignements sur la garantie

GARANTIE À VIE LIMITÉE DE
LIBERTY HARDWARE MANUFACTURING CORPORATION

Sous réserve des conditions de cette garantie, Liberty Hardware Manufacturing Corporation (« Liberty Hardware ») garantit à l'acheteur d'origine (« Vous ») que le produit n'aura pas de vice de matériaux et de fabrication. Si le produit ne se conforme pas à cette garantie, Liberty Hardware réparera ou remplacera le produit ou, au choix de Liberty Hardware, remboursera le prix d'achat. La réparation, le remplacement ou le remboursement du prix d'achat original est votre seul et unique recours au titre de cette garantie ou de toute autre garantie du produit, qu'elle soit explicite ou implicite.

Période de garantie limitée La période de garantie est pour la durée de vie du produit et commence à la date de la première installation du produit à des fins résidentielles.

Limitations de la garantie. Cette garantie ne couvre pas : (a) usure normale ; (b) les dommages résultant d'un mauvais traitement, d'une négligence, d'une mauvaise utilisation ou de tout accident ou catastrophe naturelle ; (c) mauvaise installation ou mauvais entretien ; (d) utilisation commerciale, industrielle, institutionnelle ou non résidentielle ; ou (e) produits modifiés sans l'autorisation préalable par écrit de Liberty Hardware. Cette garantie n'est pas transférable.

Obligations de l'acheteur. Si ce produit n'est pas conforme à sa garantie, renvoyez-le (affranchi) au concessionnaire ou détaillant où le produit a été acheté, accompagné de la preuve d'achat et d'une réclamation par écrit décrivant brièvement le défaut. Il se peut que l'on vous demande de fournir d'autres °renseignements ou preuves du défaut. Tout produit renvoyé qui a été remplacé ou remboursé devient la propriété de Liberty Hardware.

Limitations des garanties implicites. LES GARANTIES IMPLICITES, NOTAMMENT TOUTE GARANTIE DE QUALITÉ MARCHANDE OU D'ADAPTATION À UN USAGE PARTICULIER, SONT LIMITÉES PAR LA MÊME DURÉE QUE CETTE GARANTIE EXPLICITE ; AUTREMENT, LIBERTY HARDWARE DÉSAVOUE TOUTES LES GARANTIES EXPRESSES OU IMPLICITES. Certains États ne permettant pas de limites sur la durée d'une garantie implicite, les limitations ci-dessus ne sont peut-être pas applicables.

Avis de non-responsabilité. AUCUNE AUTRE GARANTIE EXPLICITE N'A ÉTÉ FAITE OU NE SERA FAITE AU NOM DE LIBERTY HARDWARE RELATIVEMENT À CE PRODUIT. LIBERTY HARDWARE NE SERA EN AUCUN CAS RESPONSABLE DES DOMMAGES SPÉCIAUX, INDIRECTS OU ACCESSOIRES QU'ILS SOIENT PROVOQUÉS PAR UNE INOBSERVATION DE GARANTIE, UNE RUPTURE DE CONTRAT OU AUTRE. Certains États ne permettent pas l'exclusion de dommages accessoires ou indirects d'une garantie implicite, par conséquent, les exclusions et limitations ci-dessus ne sont peut-être pas applicables.

Droit national : Cette garantie vous confère des droits précis auxquels peuvent s'ajouter d'autres droits variant d'un État à l'autre ou d'une province à l'autre.

Información de la garantía

Liberty Hardware Manufacturing Corporation
GARANTÍA LIMITADA DE POR VIDA

Sujeto a las condiciones de esta garantía, el fabricante Liberty Hardware Manufacturing Corporation ("Liberty Hardware") le garantiza al comprador original ("Usted") que el producto no tendrá ningún defecto en los materiales ni en la mano de obra. Si el producto no cumple con esta garantía, Liberty Hardware reparará o reemplazará el producto o, a decisión de Liberty Hardware, le reembolsará el costo de la compra. Su único remedio bajo ésta u otra garantía del producto, bien sea explícita o implícita, es la reparación, el reemplazo o el reembolso de la compra original.

Plazo de la Garantía Limitada. El plazo de la garantía es por la vida del producto y empieza en la fecha en que se instala por primera vez para usos residenciales.

Limitaciones de la Garantía. Esta garantía no cubre: (a) el uso y desgaste normal; (b) los daños causados por abuso, negligencia, uso indebido u ocasionados por un accidente o caso fortuito; (c) la instalación o mantenimiento indebido; (d) el uso comercial, industrial, institucional u otro que no sea el residencial; o (e) la alteración de productos sin el permiso previo por escrito de Liberty Hardware. Esta garantía no es transferible.

Obligaciones del Comprador. Si este producto no cumple con su garantía, devuelva el producto (con el franqueo prepagado) al distribuidor o vendedor en donde compró el producto con un recibo de la venta y un reclamo que describa brevemente el defecto. También podría tener que proporcionar otra información o comprobante del defecto. Cualquier producto devuelto que sea reemplazado o reembolsado se convertirá en propiedad de Liberty Hardware.

Limitaciones en Garantías Implícitas. LAS GARANTÍAS IMPLICÍTAS, INCLUYENDO CUALQUIER GARANTÍA DE COMERCIABILIDAD O IDONEIDAD PARA UN PROPÓSITO EN PARTICULAR, ESTÁN LIMITADAS A LA MISMA DURACIÓN DE ESTA GARANTÍA EXPLÍCITA; DE LO CONTRARIO, LIBERTY HARDWARE RENUNCIA A TODAS LAS GARANTÍAS, EXPLÍCITAS O IMPLICÍTAS. Algunos estados no permiten limitaciones en la duración de las garantías implícitas, y por lo tanto esta limitación descrita podría no aplicarle a Usted.

Renuncia. NINGUNA OTRA GARANTÍA EXPLÍCITA HA SIDO HECHA O SERÁ HECHA EN NOMBRE DE LIBERTY HARDWARE EN CUANTO AL PRODUCTO. LIBERTY HARDWARE NO SERÁ RESPONSABLE POR DAÑOS ESPECIALES, FORTUITOS O CONSECUENTES SI RESULTAN O NO DEL INCUMPLIMIENTO DE LA GARANTÍA O DEL INCUMPLIMIENTO DEL CONTRATO, O DE OTRAS. Algunos estados no permiten la exclusión de daños fortuitos o consecuentes en una garantía implícita, y por lo tanto la exclusión y limitación descrita podrían no aplicarle a Usted.

Ley Estatal. Esta garantía le da a usted derechos legales específicos y Usted también podría tener otros derechos, los cuales varían de un estado al otro.

Inquiries: 140 Business Park Dr. • Winston-Salem, NC, USA 27107 • 1-800-542-3789

Pour tous renseignements: 140 Business Park Dr. • Winston-Salem, NC, USA 27107 • 1-800-542-3789

Informes: 140 Business Park Dr. • Winston-Salem, NC, USA 27107 • 1-800-542-3789

SECTION 12 58 16

Chairs/Sofa

SECTION 21 13 13

FIRE SPRINKLER SYSTEM

TEST AND DRAIN VALVE ON SYSTEM SIDE (P2904.3.4) - Lansdale Riser

PART I - General

1.01 Summary

A. Section Includes: Multipurpose fire suppression system integrated with potable cold water distribution system, using crosslinked polyethylene (PEX) tubing and ASTM F 1960 cold expansion fittings.

B. Intent: EnCity chose a multipurpose fire sprinkler system to simplify the system to have a single pump and less material in piping. Pex was chosen to maintain fewer material types reducing production time and for it's quick connect ability.

1.02 References

A. General

B. ASTM International
   1. ASTM E84 Standard Test Method for Surface Burning Characteristics of Building Materials
   2. ASTM E814 Standard Test Method for Fire Tests of Through-penetration Fire Stops
   3. ASTM F876 Standard Specification for Crosslinked Polyethylene (PEX) Tubing
   4. ASTM F877 Standard Specification for Crosslinked Polyethylene (PEX) Plastic Hot and Cold-Water Distribution Systems
   5. ASTM F1960 Standard Specification for Cold Expansion Fittings with PEX Reinforcing Rings for Use with Cross-linked Polyethylene (PEX) Tubing

C. Underwriters Laboratories, Inc. (UL)
   1. UL 1821 Standard for Safety for Thermoplastic Sprinkler Pipe and Fittings for Fire Protection Service

D. American National Standards Institute (ANSI)/National Sanitation Foundation (NSF)
   1. ANSI/NSF Standard 14 Plastics Piping System Components and Related Materials
   2. ANSI/NSF Standard 61 Drinking Water System Components - Health Effects

E. International Residential Code (IRC) 2015
   1. Section P2904.6.2(1)

1.03 Delivery, Storage, and Handling

A. General: Follow guidelines outlined in Division 1 Product Requirements.

B. Storage and Protection: Store materials protected from exposure to harmful environmental conditions and at temperature and humidity conditions recommended by the manufacturer.
   1. Store PEX tubing in cartons or under cover to avoid dirt or foreign material from being introduced into tubing. Cover cut ends at all times.
   2. Do not expose PEX tubing to direct sunlight for more than 30 days. If construction delays are encountered, provide cover to portions of tubing exposed to direct sunlight.

3. Do not store sprinkler assemblies or cover plates in areas subject to extreme temperatures over 100 degrees F (38 degrees C).

1.04 Warranty

A. Installation to be performed in a manner as to maximise possible warranties.

1.05 Maintenance

A. When rebuilding home track number of times a fitting has been re-used by tallying with a sharpie/marker. PEX quick connect fittings are to be replaced after 3 uses or when competing at the Department of Energy Solar Decathlon 2017.

PART II - Products

Websites:
Manifold- Lansdale **1-1/4" Basic Trim w/Test and Drain 650-375-00740**
Sprinkler Heads-https://www.macombgroup.com/ASSETS/DOCUMENTS/ITEMS/EN/GL423115502_Inst.pdf

2.01 Resi-Riser Fire Sprinkler Manifold

A. Manufacturer: Lansdale

2.02 Fire Sprinkler Heads

A. Manufacturer: Globe Fire Sprinkler Corporation

2.03 Substitutions

A. Plumbing Manifold - Substitution may be provided that is compatible with PEX system, allows for design pressure and flow requirements, and contains all the components that the Resi-Riser contains.

B. Fire Sprinkler Heads - Substitution may be provided that is equal in performance to the specified sprinklers and has equal or greater coverage provided the same obstructions. Submit product information under consideration for approval prior to substitution.

2.04 Associated Materials

A. Tubing
   1. Material: Crosslinked polyethylene (PEX) manufactured by PEX-a or Engel method.
   2. Type: 1-¼” Pex-A
   3. Material Standard: Manufactured in accordance with ASTM F876 and ASTM F877 and tested for compliance by an independent third party agency.
   4. Standard-grade hydrostatic design and pressure ratings from PPI.
   5. Hydrostatic temperature and pressure rating from UL.
   6. Minimum Bend Radius (cold bending): No less than 6 times the outside diameter. Bends with a radius less than stated shall require the use of a bend support as supplied by the PEX tubing manufacturer.
   7. Nominal Inside Diameter: Provide tubing with nominal inside diameter, in accordance with ASTM F876 as indicated.
      a. 1-1/4” inch (12.7 mm)

B. Fittings
    1. Material: Sharkbite Quick Connect

C. Manifolds
    1. Lansdale Riser

D. Sprinkler Heads
    1. Pendent Type
    2. Recessed

PART III - Execution

3.01 Manufacturer's Instructions

A. Comply with manufacturer's product data, including product technical bulletins, installation instructions, and design drawings.

3.02 Examination

A. Verification of Site Conditions
    1. Verify that route for sprinkler lines is prepared and debris free.

3.03 Installation

A. Plumbing System
    1. Install system with manufacturer recommendations.
    2. Maintain a 12" space between PEX tubing and other ceiling mounted devices.
    3. Do not expose PEX tubing to direct sunlight for more than 30 days.
    4. Ensure that no glues, solvents, sealants, or chemicals come in contact with the tubing without prior permission from PEX tubing manufacturer.
    5. Protect PEX tubing with sleeves where abrasion may occur.
    6. Use strike protectors where appropriate to prevent screw or nail penetrations.
    7. Use support as specified by local plumbing code and by PEX tubing manufacturer's installation handbook.
    8. Pressurze the plumbing system in accordance with applicable codes (see Drawing sheet P-001).
    9. Comply with safety precautions when pressure testing, including use of compressed air, where applicable.

B. Fire Suppression System
    1. Install PEX tubing as indicated on drawings.
    2. Do not paint the sprinklers or cover plates.

3. Install sprinklers in accordance with the PEX tubing manufacturer's specifications and IRC 2015, Chapter 29.
4. Ensure sprinklers are positioned so that discharge will not be affected by obstructions.
5. Ensure sprinklers maintain minimum distances from heat sources as specified in the PEX tubing manufacturer's installation handbook.
6. Ensure system meets or exceeds flow requirements specified in hydraulic calculations by completing a flow verification test at sprinkler location identified on the drawings.
7. Ensure protective cap assembly remains in place until construction is complete.

3.04 Field Quality Control

A. Site Test:
    1. Provide flow verification test to confirm system performance meets or exceeds flow requirements as indicated by hydraulic calculations and sprinkler manufacturer's specifications.

3.05 Cleaning

A. Clean Installed Products in accordance with manufacturer's instruction prior to project completion.
B. Remove construction debris from project site and legally dispose of debris.
C. With each deconstruction sequence clean ends of PEX and cover with a protective cap.

3.06 Protection

A. Protect installed work from damage due to subsequent construction activity.

END OF SECTION

SECTION 21 05 19

Water Meter

1700 SERIES INSTALLATION INSTRUCTIONS

1. Before beginning the installation, verify that the system temperature, pressure and flow rate **do not** exceed the ratings indicated on the meter.

2. The meter is designed to operate at a sustained flow of ½ the Maximum Flow Rating (indicated as the Continuous Flow Rating). The meter **should not** be operated at the Maximum Flow Rating for more than one hour per day as excessive wear and/or failure will result.

3. Flush the pipeline thoroughly after any plumbing changes to eliminate the possibility of foreign materials reaching the meter.

4. The ½", ¾" and 2" meters may be installed in horizontal or vertical pipelines (either up or down flow). To achieve the rated accuracy, there should be at least five (5) diameters of straight pipe (same size as meter) before and after the meter. Meters 1" through 1-1/2" must be installed on horizontal pipelines **only**. There is no straight pipe requirement before or after these meters. In horizontal installations, the flow counter should be facing straight upward.

5. Pay careful attention to the flow direction as indicated by the arrow cast into the meter body.

6. It is highly recommended that a strainer be installed upstream of the meter inlet. It is also recommended that a shutoff valve be located before and after the meter to facilitate service.

7. Care should be taken to protect the meter from water hammer as well as freezing temperatures.

8. The counter is calibrated in U.S. gallons and can not be reset. It will roll around to zero after reaching its maximum reading. See page 2 for additional information on the counter.

9. Meters with a pulse output contain a magnetically driven "dry contact type" reed switch. Each contact closure is equal to one (1) or ten (10) gallons of water as indicated on the meter. The electrical rating of the switch is 100mA at 42 volts AC/DC.

HOW TO READ A 1700 SERIES WATER METER

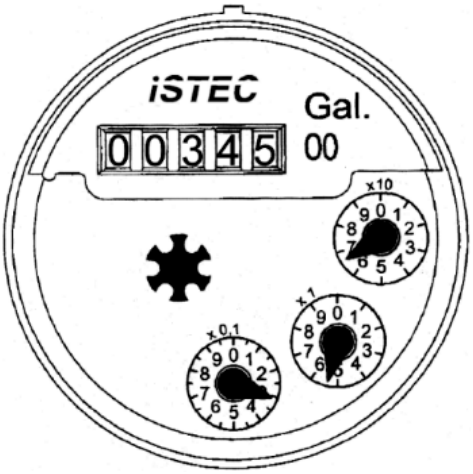

The 1700 Series counter consists of a row of numbers (roller counter) and one or more circular dials with rotating pointers. There is also a star shaped wheel that rotates whenever flow is present (trickle indicator).

The roller counter is calibrated in U.S. gallons and cannot be reset. It indicates the total flow through the meter in gallons, hundreds of gallons or thousands of gallons. The correct multiplier is indicated on the face adjacent to the roller counter. In the example above, the total indicated is 345 x 100 or 34,500.

The circular dials indicate tenths of gallons, gallons and tens of gallons. The respective multiplier is marked adjacent to the dial. For example, on the dial marked “x10”, each number represents increments of ten gallons (i.e. 3 = 30 gallons, etc.) and one full rotation equals 100 gallons. On the dial marked “x0.1”, each increment is one tenth (1/10) of a gallon (4 = 0.4) and a full rotation of the dial represents a total of 1 gallon. Note that if the pointer is between two numbers, the lower number is read.

The reading represented by the counter displayed above is 345 x 100 plus 6 x 10 plus 5 x 1 plus 3 x 0.1 or 34,565.3 gallons.

The counter will roll around to zero and restart once it reaches its maximum reading.

SECTION 22 05 23

1 1/4 - 1 1/4" Ball Valve

IT IS THE RESPONSIBILITY OF THE CONTRACTOR AND/OR SYSTEM INSTALLER TO ENSURE THAT THESE VALVES ARE INSTALLED IN ACCORDANCE WITH APPLICABLE AND CURRENT ANSI B31 STANDARDS

PLEASE READ THE FOLLOWING BEFORE INSTALLING THESE VALVES

EASE OF OPERATION – BALL VALVES ARE EASIER TO OPERATE THAN OTHER TYPES OF VALVES. CAUTION MUST BE TAKEN DURING INSTALLATION SO AS TO ENSURE THAT THE HANDLES ARE POSITIONED IN SUCH A WAY AS TO AVOID UNWANTED OR ACCIDENTAL OPENING OR CLOSING OF THE VALVE. VIBRATION IN, THROUGH, OR AROUND THE VALVE CAN ALSO CAUSE ACCIDENTAL OR UNWANTED OPENING OR CLOSING OF THE VALVE.

INSTALLATION – WHEN THREADING A PIPE OR NIPPLE INTO A VALVE, ALWAYS HOLD THE VALVE WITH A WRENCH ON THE SAME SIDE OF THE BALL AS THE PIPE OR NIPPLE TO ELIMINATE STRESS ON THE JOINT BETWEEN THE BODY AND THE CAP OF THE VALVE. WHEN SWEATING A COPPER TUBE OR FITTING INTO A BALL VALVE, ALWAYS KEEP THE HANDLE AT A 45° ANGLE SO AS NOT TO BUILD UP PRESSURE IN THE BALL OR BALL CAVITY. ALLOWING THE HEAT TO PASS THROUGH AND AROUND THE BALL ELIMINATES THERMAL EXPANSION AND PROTECTS THE SEATS.

FITTINGS – USE ONLY THOSE FITTINGS OR PIPING THAT ARE COMPATIBLE WITH THE VALVES BEING USED TO PREVENT BREAKAGE AND/OR LEAKAGE (I.E., IT IS NOT RECOMMENDED TO USE PLASTIC PIPE OR FITTINGS WITH METALLIC VALVES SINCE THERMAL EXPANSION, EXTERNAL FORCES, OR OTHER SITUATIONS CAN CAUSE BREAKAGE OR LEAKAGE AT OR NEAR THE JOINT). THE VALVES ARE MACHINED WITH NPT THREADS THAT MEET ANSI B1.20.1STANDARDS AND MUST BE USED WITH COMPATIBLE FITTINGS AND PIPE.

PRESSURE/TEMPERATURE LIMITS – THE MAXIMUM WORKING PRESSURE LIMIT OF THE VALVE IS MARKED ON THE VALVE BODY. NEVER EXCEED THIS "W.O.G." RATING WHICH IS SPECIFIED UP TO 100°F. TEMPERATURES HIGHER THAN 100°F DECREASE THE MAXIMUM WORKING PRESSURE LIMIT. REFER TO THE APPROPIATE PRESSURE/TEMPERATURE CHART THAT IS PUBLISHED IN THE CATALOG.

PRESSURE RELIEF – DETERMINE AND PROVIDE CORRECTIVE ACTION AGAINST EXCESSIVE PRESSURE BUILD UP IN THE VALVE OR PIPING SYSTEM DUE TO THERMAL EXPANSION. THERMAL EXPANSION CAN CREATE EXTREME PRESSURES WELL ABOVE THE WORKING PRESSURE LIMIT OF THE VALVE WHICH CAN CAUSE LEAKING OR BURSTING OF THE VALVE.

FREEZING – PROVIDE MEANSTO PROTECT THE VALVE FROM FREEZING AND BURSTING WHEN USED WITH LIQUIDS. VALVES SHOULD BE DRAINED AND HANDLE LEFT IN ½ OPEN POSITION TO PREVENT DAMAGE FROM FREEZING.

SUPPORTS – IF YOU CHOOSE TO CONNECT A FLEXIBLE HOSE OR OTHER NON-RIGID CONDUIT TO THE VALVE, THE DESIGN OF SUCH INSTALLATION MUST PREVENT ANY "WHIPPING ACTION" THAT COULD INJURE OR DAMAGE PERSONNEL OR EQUIPMENT.

FLUID COMPATIBILITY – THE USE OF TFE PIPE TAPE AS A SEALANT IS RECOMMENDED FOR THREADED VALVES WHEN MAKING JOINTS. DO NOT APPLY EXCESSIVE TORQUE WHEN INSTALLING THE VALVE. TO PREVENT DISTORTION OR DAMAGE TO THE VALVE, DO NOT APPLY TORQUE THROUGH THE VALVE. USE PROPER SUPPORTS IN HANDLING PRE-FABRICATED SECTIONS AND IN FINAL INSTALLATION. ALWAYS TEST THE SYSTEM BEFORE USING.

MAINTENANCE – DO NOT DISASSEMBLE THE VALVE WHILE UNDER PRESSURE.

Webstone *Company, Inc.*

www.webstonevalves.com TEL: (800) 225-9529 FAX: (800) 336-5133

THIS SPACE FOR DESIGNER/ENGINEER APPROVAL		
Job/Customer _____	Date _____	Contractor _____
Model Specified _____	Qty _____	Approved By _____
Designer/Engineer _____	Date _____	Contractor's PO# _____
Submitted by _____	Date _____	Other _____

5061 Series

Full Port Forged Brass Ball Valves
w/ Hi-Flow Hose Drain & Reversible Handle
SWT
600 WOG
ISO 9001

ITEM #	SIZE	CTN	CASE	A	B	C	D	E	F
50612	1/2"	6	36	1/2	2	2	3 7/8	2 1/2	1/2
50613	3/4"	6	36	3/4	2 7/8	2 1/16	3 7/8	2 3/8	1/2
50614	1"	4	24	1	3 9/16	2 5/8	4 5/8	2 1/2	1/2
50615	1 1/4"	2	12	1 1/4	3 7/8	3	4 5/8	3	3/4
50616	1 1/2"	2	12	1 1/2	4 5/8	3 1/2	5 5/8	3 1/16	3/4
50617	2"	1	6	2	5 1/2	4	5 5/8	4	3/4

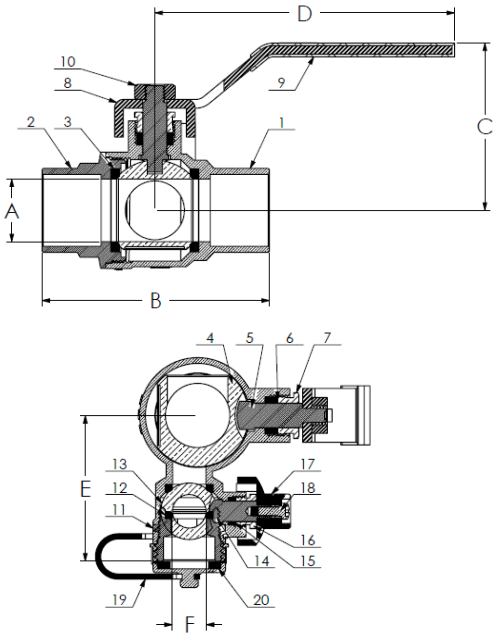

NO.	DESCRIPTION	MATERIAL
1	BODY	BRASS
2	END CAP	BRASS
3	SEAT	PTFE
4	BALL	BRASS HCP
5	STEM	BRASS
6	STEM SEAL	PTFE
7	PACKING GLAND	BRASS
8	LEVER HANDLE	STEEL CP
9	HANDLE JACKET	VINYL
10	HANDLE NUT	STAINLESS STEEL
11	END CAP	BRASS
12	SEAT	PTFE
13	BALL	BRASS HCP
14	STEM	BRASS
15	STEM SEAL	PTFE
16	PACKING GLAND	BRASS
17	HANDLE	ENAMEL COATED ALUMINUM
18	HANDLE SCREW	BRASS
19	CAP & STRAP	BRASS W/ EPDM STRAP
20	WASHER	EPDM

TEMP °F	PSI
100	600
150	485
200	395
250	210
300	N/A
350	N/A
366	N/A

Specifications: Designed for residential, commercial or industrial use with water, oil or gas. This approved Webstone valve is actuated by a blowout proof stem and features an adjustable packing gland. Solder joint temperature ratings are per ASME B16.18 Annex A for 95-5 solder. Other solder materials have lower pressure/temperature limits. Do not silver braze or overheat valves when soldering.

Webstone VALVE INNOVATION

Quality and Commitment Since 1954

www.webstonevalves.com · P: (800) 225-9529 · F: (800) 336-5133

Webstone product specifications in U.S. customary units are approximate and are provided for reference only. Webstone reserves the right to change or modify product design, construction, specifications or materials without prior notice and without incurring any obligation to make such changes and modifications on Webstone products previously or subsequently sold.

SECTION 22 07 00

Pipe Sleeving/Wrapping (at corners 45deg or greater)

SECTION 22 11 23

Booster Pump

Grundfos COMFORT

Circulator pumps

50/60 Hz

be
think
innovate

GRUNDFOS

Table of contents

1. Product description 3
Type key Europe . . . 3
Type key USA . . . 3
Approvals . . . 3
Applications . . . 3
Domestic hot-water systems . . . 4
Performance range . . . 4

2. Operating conditions 5
Pumped liquids . . . 5
Liquid and ambient temperatures . . . 5
Maximum system pressure . . . 5
Inlet pressure . . . 5
Pump location . . . 5

3. Functions 6
COMFORT BA PM and BXA PM . . . 6

4. Construction 9
Class II electrical insulation . . . 9
Motor . . . 9
Stator . . . 9
Spherical separator . . . 9
Bearing pin and bearing ball . . . 9
Rotor . . . 9
Pump housing . . . 10
Isolating valve and non-return valve . . . 10
Seal ring . . . 10
Union nut . . . 10
Sectional drawing . . . 11
Material specification . . . 11

5. Performance curves 12
Curve conditions . . . 12
Energy labelling . . . 12

6. Data sheets 13

7. Product numbers 26

8. Accessories 27
Fittings . . . 27
Service kit for plug . . . 28
Plug-in timer . . . 28

9. Grundfos Product Center 29

1. Product description

Type key Europe

Example	UP	S	20	-14	M	B	X	A	PM

- Circulator pump
- Selectric: 3-speed
- Type range:
  15 = length 80 mm / Rp 1/2
  20 = length 110 mm / G 1 1/4
  XX = pump head only
- Maximum head [dm]
- Motor (pump head only - fits all COMFORT pump housings)
- Brass pump housing
- Integrated isolating and non-return valves
- $AUTO_{ADAPT}$
- Permanent magnet

Type key USA

Example	UP	10	-16	A	PM	B	5	LC

- Circulator pump
- Type range
- Maximum head [dm]
- AUTOADAPT
- Permanent magnet
- Brass pump housing
- 5 = 1/2" internal thread
  N5 = 1/2" NPT
  U = 1 1/4" NPSM + integrated isolating and non-return valves
- Line cord and plug

Approvals

Fig. 1 European approvals

Fig. 2 US approvals

Applications

GRUNDFOS COMFORT circulator pumps are designed for

- domestic hot-water systems in single- and two-family houses
- small heating systems
- cooling and air-conditioning systems.

The pumps are suitable for open and closed systems. They must be installed indoors.

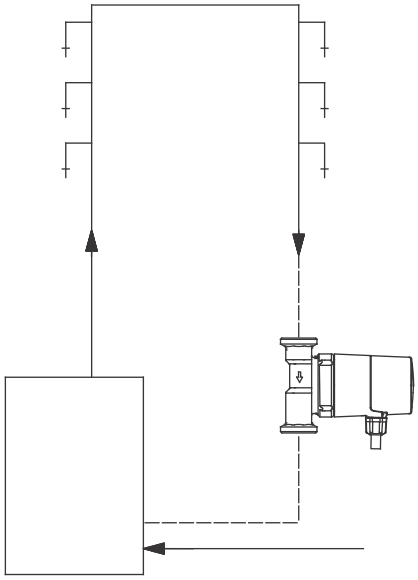

TM01 9110 1100

Fig. 3 Single-loop system

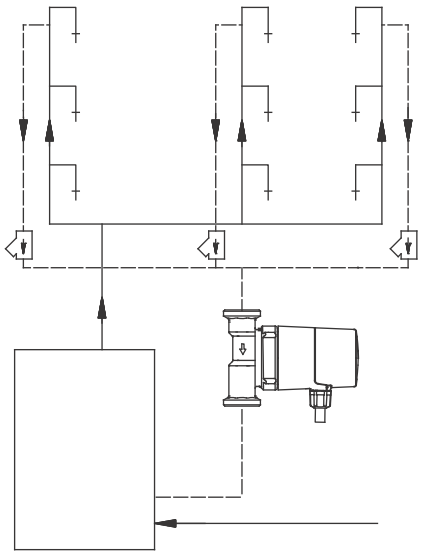

TM01 9111 1100

Fig. 4 Branched system

Domestic hot-water systems

For circulation of drinking water in domestic hot-water systems, use pump type GRUNDFOS COMFORT with stainless-steel, brass or bronze pump housing.

Grundfos recommends that you install the pump in systems with hot-water storage tanks.

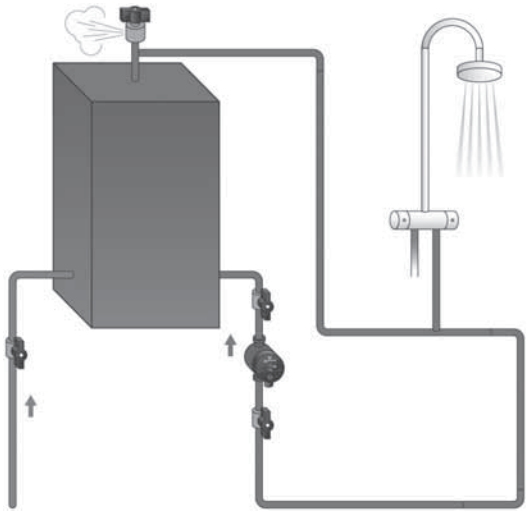

Fig. 5 Domestic hot-water application with hot-water storage tank

Performance range

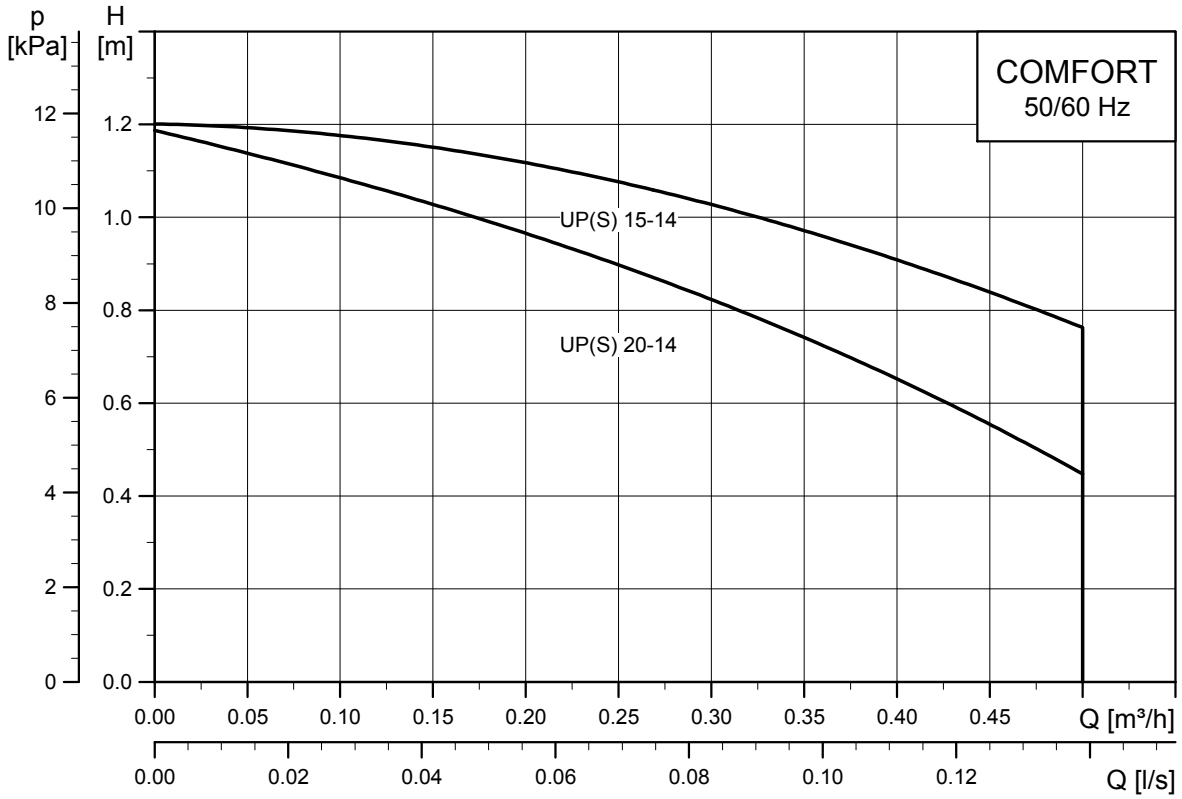

Fig. 6 UP(S) COMFORT performance range

2. Operating conditions

Pumped liquids

- Thin, clean, non-aggressive and non-explosive liquids without solid particles or fibres
- Cooling liquids, not containing mineral oil
- Domestic hot water
- Softened water.

The kinematic viscosity of water is 1 mm^2/s (1 cSt) at 20 °C. If the pump is used for a liquid with a higher viscosity, the hydraulic performance of the pump will be reduced.

Example: 50 % glycol at 20 °C means a viscosity of approx. 10 mm^2/s, reducing pump performance by approx. 15 %.

When selecting a pump, the viscosity of the pumped liquid must be taken into account.

Liquid and ambient temperatures

Liquid temperature range: 2 to 95 °C.

We recommend that you keep the operating temperature around e.g. 50 °C to minimise build-up of lime deposits. Be aware of the risk of legionella contamination.

The ambient temperature must always be lower than the liquid temperature to minimise condensation in the stator housing.

Maximum system pressure

PN 10: 1.0 MPa (10 bar/145 psi).

Inlet pressure

To prevent cavitation noise and damage to the pump bearing, a minimum inlet pressure of 0.5 bar (5 m head) is required at the pump suction port.

Pump location

Indoors, in a non-aggressive and non-explosive atmosphere.

Relative air humidity: Maximum 95 %.

3. Functions

COMFORT BA PM and BXA PM

COMFORT BA PM and BXA PM models have three operation modes:

- AUTO$_{ADAPT}$ mode
- temperature control mode
- continuous 100 % mode.

AUTO$_{ADAPT}$ mode

COMFORT BA PM and BXA PM pumps feature the AUTO$_{ADAPT}$ function that adapts the pump operating hours by switching on and off according to the tapping pattern of the user(s). This means that the pump provides the maximum comfort and saves energy at the same time.

Energy-saving

The built-in AUTO$_{ADAPT}$ function saves energy in two ways:

- Electrical energy consumption of the pump itself
- Heat energy consumption of the domestic hot-water system.

The AUTO$_{ADAPT}$ function automatically adjusts the number of pump operating hours, based on the hot-water consumption in the given system.

The AUTO$_{ADAPT}$ function requires an included temperature sensor to be installed on the flow pipe 20 to 50 cm from the boiler outlet. This sensor and the temperature sensor incorporated in the pump are used to detect when hot water is tapped. The detected tapping events are logged and used to predict the consumption pattern. The AUTO$_{ADAPT}$ function automatically controls the on/off behaviour of the pump according to this pattern. This ensures that the pump only runs when necessary, which saves both heat energy and electrical energy.

The pump needs two weeks to adapt when hot water is tapped. This means that the pump starts up in temperature mode the first two weeks even if you have selected AUTO$_{ADAPT}$.

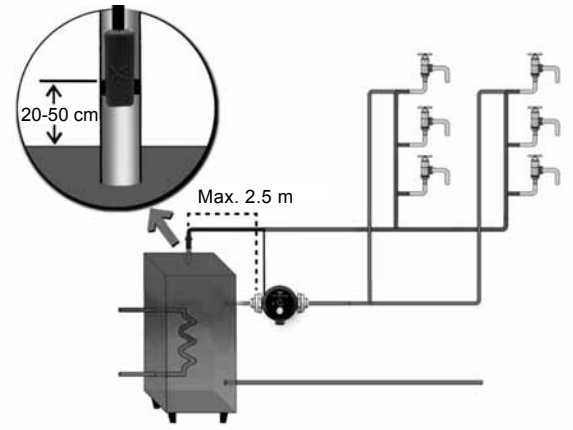

Fig. 7 COMFORT BA PM, BXA PM pump with built-in temperature sensor

AUTO$_{ADAPT}$ in heating systems regulated with a thermostatic regulating valve

In systems including a thermostatic regulating valve, choose a COMFORT pump without the AUTO$_{ADAPT}$ function, e.g. from the COMFORT UP(S) range.

Choosing a pump with AUTO$_{ADAPT}$ function will result in two active regulating systems working separately, which is not recommendable.

NOTE: If a pump with AUTO$_{ADAPT}$ function is installed in a circulation system where the temperature of the recirculated water is regulated by a thermostatic regulating valve, Grundfos recommends that you open the thermostatic regulating valve completely. This is done by setting the valve to max., which deactivates its regulating function. See fig. 6.

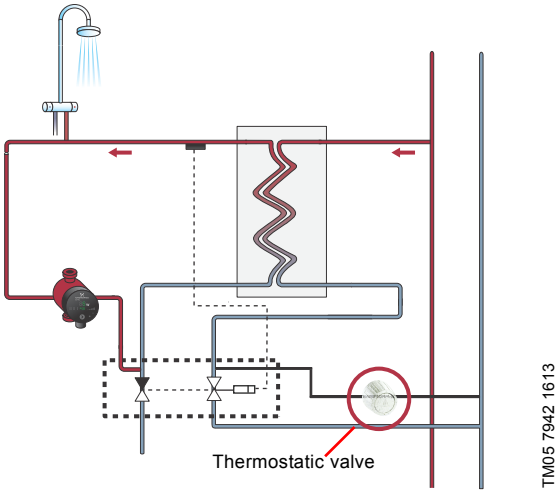

Fig. 8 Example of an application with thermostatic regulating valve

Control function

The control function is a combination of three parameters:

- detection of hot-water consumption
- event log function (when the demand occurs)
- pump control.

Detection of hot-water consumption

The detection of hot-water consumption is done via the temperature sensor installed in the flow pipe. The system logs the tapping events. Temperature rise, caused by the pump operation, is not registered in the event log.

Event log function

The COMFORT AUTO pump incorporates an event log that learns the scheme of demand for hot water in the domestic hot-water system. Via the event log, the pump predicts when to start circulating hot water.

The event log function stores the weekly tapping events in the system. The hot-water consumption pattern for two weeks is stored in the event log. See example.

Date	Time of day														
	00:00	00:20	00:20	00:40	------>	07:00	07:20	07:20	07:40	07:40	08:00	08:00	08:20	------>	23:30	23:50
01	0		0			0		T		0		0			0	
02	0		0			0		T		T		0			0	
03	0		0			0		T		0		0			0	
04	0		0			0		T		0		0			0	
05	0		0			0		0		T		0			T	
06	0		0			0		T		0		0			0	
07	0		0			0		T		0		0			0	
08																
09																
10																
11																
12																
13																
14																

0: No consumption.

T: Tapping event is registered.

Example

- From 07:20 to 07:40, six tapping events (T) are registered (morning bath).
- From 07:40 to 08:00, two tapping events (T) are registered.
- From 23:30 to 23:45, one tapping event (T) is registered.

This pattern implies that hot water is to be available for tapping from 07:20 to 08:00.

At 08:00 the pump can stop circulating hot water. Likewise, the pump is to circulate hot water for use from 23:30 to 23:50.

The data shown is for one week of operation only. The pump stores data for two weeks. When data for two weeks has been logged, the pump is able to distinguish between the tapping pattern during workdays and weekends.

Pump control

Pump operation is based on the data stored in the event log and on the temperature of the pipes.

The pump control incorporates a temperature hysteresis, meaning that the pump ensures that the hot-water temperature is within the range of what is accepted as hot water. This temperature hysteresis control is enabled when the data content of the event log makes it probable that hot water will be tapped within the next 20 minutes.

In the example, the hysteresis control will start at 07:00 and run continuously until 08:00.

Disinfection and flushing

Once a week a disinfection function is run for 15 minutes. If, at another time of the week, a higher temperature is measured, the disinfection run will be shifted to this time.

If the pump is switched off for eight hours, it will be on to do a flushing of the circulation pipe with a duration of 15 minutes.

Fault indication

Defective external temperature sensor

If in $AUTO_{ADAPT}$, the red error indicator LED is on and goes off when the pump is switched manually to temperature control mode, the external temperature sensor is defective. In this case, the pump turns internally to temperature control mode, because the external temperature sensor is needed for the $AUTO_{ADAPT}$ control mode. The display does not automatically change to temperature control mode.

Defective internal temperature sensor

If in $AUTO_{ADAPT}$, the red error indicator is on and doesn't go off when the pump is switched manually to temperature control mode, the internal temperature sensor is defective. In this case, the pump uses the external temperature sensor for the temperature control mode.

Temperature control mode

The regulation of the pump is based on temperature control. The working area of the pump is kept within a calculated temperature range. This means that the pump operates in an average temperature area providing the maximum comfort and saves energy at the same time. See fig. 7.

With temperature operation, the maximum temperature measured at both of the sensors is stored and the pump automatically adapts and calculate the gap between T_{stop} and T_{start}. The pump switches on when one of the sensors has a lower temperature than T_{start}. The pump switches off when the T_{stop} temperature range is exceeded on both sensors. See fig. 6.

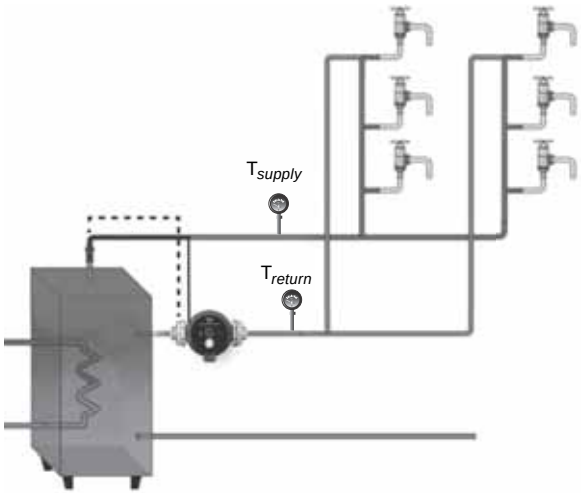

Fig. 9 Comfort in heat application

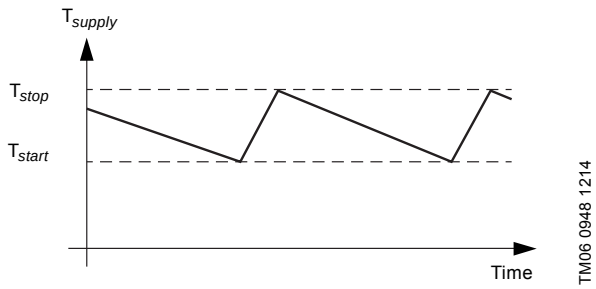

Fig. 10 Temperature control mode

Continuous 100 % mode

The pump is running continuously at full speed without any control.

4. Construction

Grundfos COMFORT PM circulator pumps come with various pump housing versions and lengths incorporating isolating and non-return valves or prepared for subsequent fitting of such valves.

The motor can be separated from the pump housing, enabling easy maintenance and replacement.

The rotor bearing is self-adjusting and lubricated by the pumped liquid.

The pumps have the following characteristics:

- Parts in contact with the pumped liquid are hermetically separated from the stator by a stainless-steel spherical separator.
- The bearing has no play, and as it has only a single bearing point, it generates very low friction, resulting in reduced power input and noise.

Grundfos COMFORT PM circulator pumps are available with two pump housing versions incorporating isolating and non-return valves or prepared for subsequent fitting of such valves.

The water-conducting part of the pump is hermetically separated from the stator by a stainless-steel spherical separator.

The motor can be separated from the pump housing for easy maintenance and replacement.

Class II electrical insulation

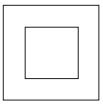

TM05 9197 2913

Fig. 11 Electrical double insulation symbol

All GRUNDFOS COMFORT PM models are designed to be electrically double insulated. This makes the protective earth connector obsolete.

Motor

The motor is a single-phase, 12-pole, permanent-magnet motor in conformity with the EMC directive.

The permanent-magnet motor has no rotating bearing shaft. A green indicator light on the motor is on when the motor is running.

The pump motor is impedance-protected and short-circuit-proof. No additional motor protection is required.

The terminal box is easily accessible and has functional cable connecting terminals. The cable entry is tight and incorporates cable relief.

Voltages

- Europe: 1 x 230 V, 50/60 Hz.
- USA: 1 x 115/230 V, 50/60 Hz.

Enclosure class: IP44.

Insulation class: F.

Stator

The stator generates a magnetic field acting directly on the magnetic rotor. As a result, the rotor is caused to rotate. The axial components of the magnetic field act as an attractive force on the rotor, thus stabilising it in its longitudinal axis.

Spherical separator

The stainless-steel spherical separator hermetically seals the water-conducting part of the pump from the electrically active part of the motor without any additional seal.

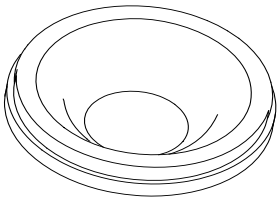

TM06 5201 4115

Fig. 12 Spherical separator

Bearing pin and bearing ball

The stainless-steel bearing pin is homogeneously welded by laser beam to the spherical separator and the bearing ball. The bearing ball is made of material resistant to wear and corrosion.

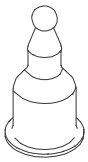

TM06 5202 4115

Fig. 13 Bearing pin

Rotor

The rotor is gimbal-mounted on the bearing ball with its step bearing of high-quality bearing material.

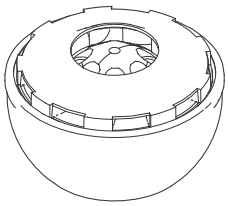

TM06 5203 4115

Fig. 14 Rotor

Pump housing

The pump housing is designed in such a way that a high hydraulic efficiency is achieved when the energy produced by the impeller is converted into pressure.

The pump housing thread enables connection to standard pipe dimensions.

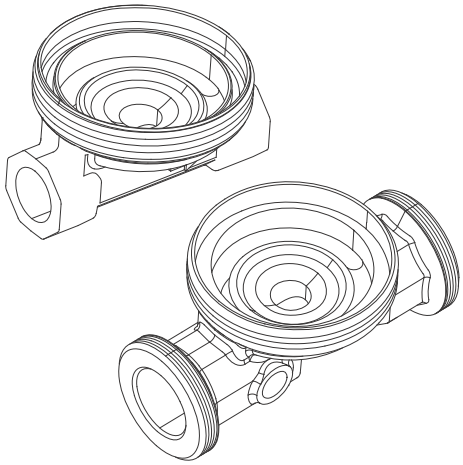

TM06 5204 4115

Fig. 15 Pump housings

Isolating valve and non-return valve

Grundfos COMFORT pump types BX for Europe and BU for the USA come with built-in isolating valve and non-return valve.

The isolating valve ensures that maintenance can be carried out while the suction side is isolated.

The non-return valve isolates the discharge side during maintenance.

Seal ring

Grundfos COMFORT has just one seal ring, between the spherical motor and the pump housing. The seal ring material is resistant to hydrolysis and ageing, thus lasting an entire pump life.

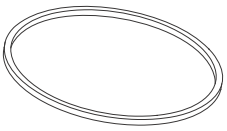

TM06 5206 4115

Fig. 16 Seal ring

Union nut

The union nut ensures that motor and pump housing are tightly connected. Thanks to the thread type, the seal ring is pressed evenly over the entire seal face.

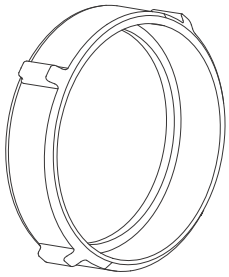

TM06 5207 4115

Fig. 17 Union nut

Sectional drawing

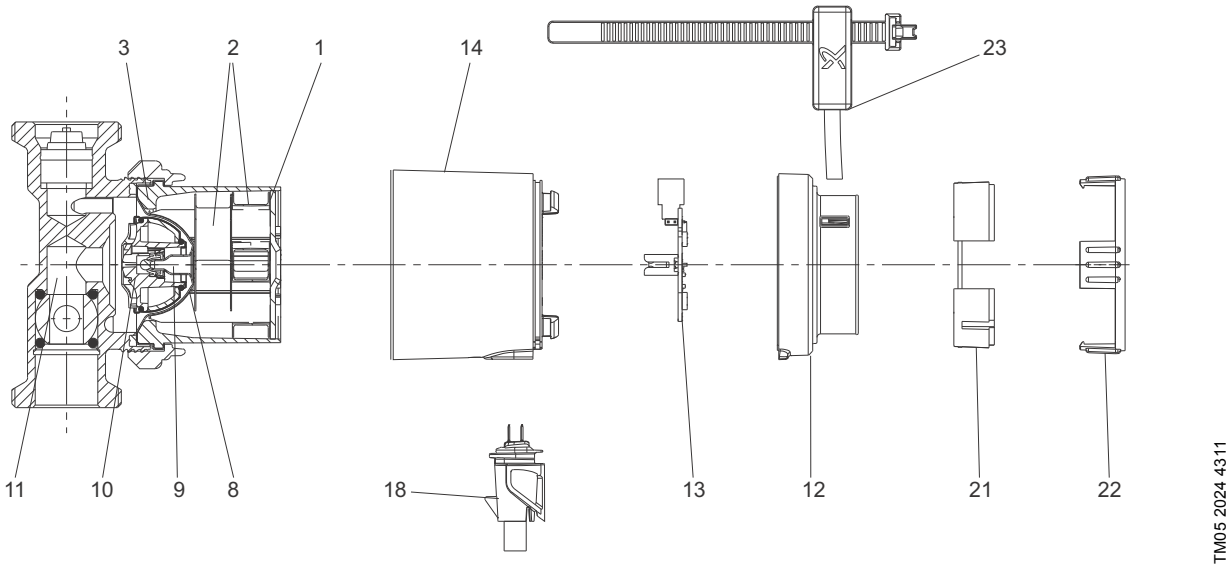

Fig. 18 Sectional drawing COMFORT PM AUTO$_{ADAPT}$

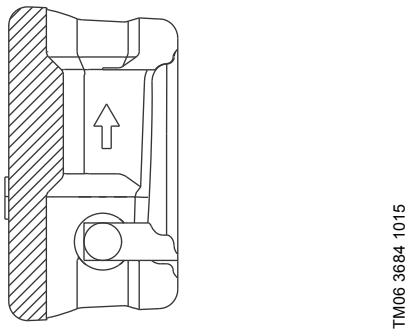

Fig. 19 Sectional drawing insulation shells

Material specification

Pos.	Component	Material	EN	AISI
1	Stator lamination	Steel		
2	Stator windings	Copper wire and enamel		
3	Stator housing	Aluminium/P66		
8	Spherical separator	Stainless steel	1.4016	430
9	Rotor can, complete	Stainless steel/tungsten carbide	1.4571	316 Ti
10	Rotor, impeller	Stainless steel, EPDM, PPO, PFTE, graphite		
11	Pump housing	Brass CW617N		
12	Terminal box cover	PC/ABS		
13	PC board with diode	FR 4		
14	Motor cover	PPO		
15	Screw	Stainless steel	1.4301	304
18	Plug/Alpha plug (BA/BXA)	PA66		
21	Cable ring 1	PC/ABS (AUTO$_{ADAPT}$ variant only)		
22	Cable ring 2	PC/ABS (AUTO$_{ADAPT}$ variant only)		
23	Temperature sensor	(AUTO$_{ADAPT}$ variant only)		
	Insulation shells	EPP 55		

5. Performance curves

Curve conditions

The guidelines below apply to the performance curves on the following pages:

- Test liquid: airless water.
- The measurements for UP COMFORT and UPS COMFORT have been made at a water temperature of 20 °C.
- All curves show average values and must not be used as guarantee curves. If a specific minimum performance is required, individual measurements must be made.
- The UP and UPS curves apply to a kinematic viscosity of υ = 1 mm^2/s (1 cSt).
- The conversion between head H [m] and pressure p [kPa] has been made for water with a density of ρ = 1000 kg/m^3. For liquids with other densities, for example hot water, the discharge pressure is proportional to the density.

Energy labelling

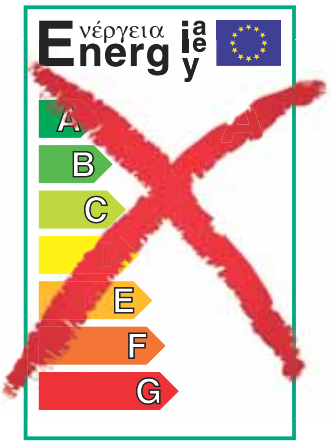

TM05 3936 1712

From 1 January 2013, the previous A to G energy label is no longer effective.

The new energy efficiency index (EEI) must be stated on circulator pumps in order to sell them in the EU.

Exceptions from EuP scope

1. Circulator pumps for domestic hot-water systems are not covered by the EuP requirements from 2013, because they are only suitable for drinking water and may only be used for such purposes. (Commission Regulation (EU) No 622/2012, subject matter and scope (2) (a))
2. Circulator pumps in the COMFORT range are not covered by the EuP requirements from 2013, because their hydraulic performance is below 1 W. (Commission Regulation (EU) No 622/2012, definition (1))

6. Data sheets

COMFORT UP 15-14 B PM, UP 15-14 B PM CN

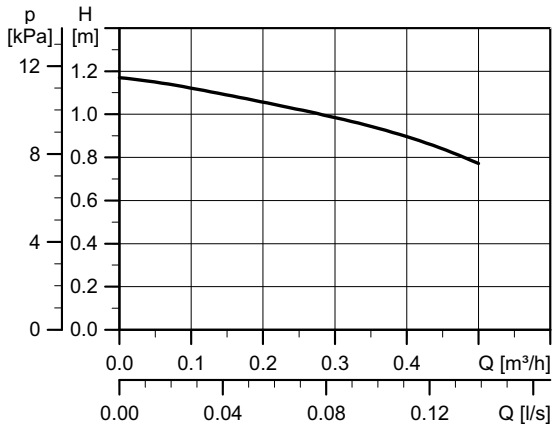

TM06 3622 0715

TM05 8545 2013

Electrical data, 1 x 230 V, 50/60 Hz

P1 [W]	$I_{1/1}$ [A]
7	0.07

Connections: Various fittings, see page 27.
System pressure: Max. 10 bar.
Liquid temperature: 2-95 °C (TF 95).

Dimensions

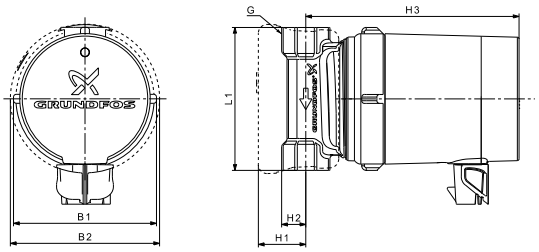

TM05 1650 3411

Pump type	Dimensions [mm]							Weights [kg]		Shipping volume [m³]
	L1	H1	H2	H3	B1	B2	G	Net	Gross	
UP 15-14 B PM UP 15-14 B PM CN	80	25	13.5	119	79.5	84	Rp 1/2	1.00	1.12	0.0026

COMFORT UP 15-14 BA PM, UP 15-14 BA PM DE, UP 15-14 BA PM CN

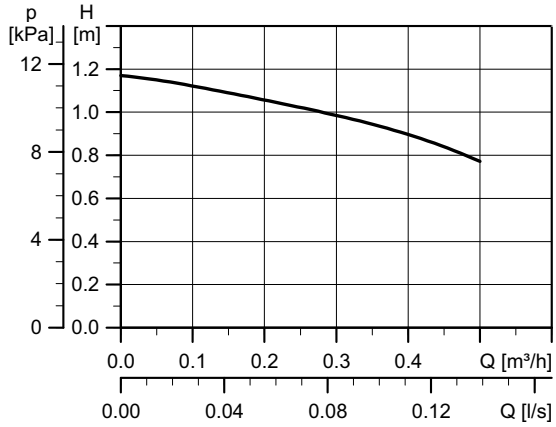

TM06 3622 0715

TM06 3165 4914

Electrical data, 1 x 230 V, 50/60 Hz

P1 [W]	$I_{1/1}$ [A]
7	0.07

Dimensions

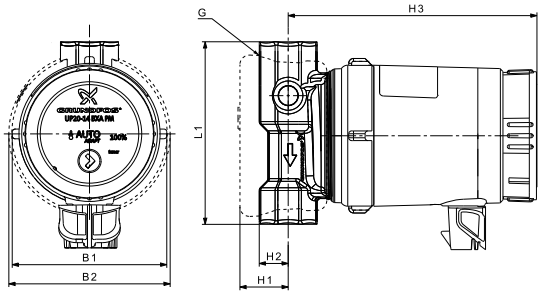

TM05 2203 4611

Connections: Various fittings, see page 27.
System pressure: Max. 10 bar.
Liquid temperature: 2-95 °C (TF 95).

Pump type	Dimensions [mm]							Weights [kg]		Shipping volume [m³]
	L1	H1	H2	H3	B1	B2	G	Net	Gross	
UP 15-14 BA PM UP 15-14 BA PM DE UP 15-14 BA PM CN	80	25	13.5	129	79.5	84	Rp 1/2	1.00	1.12	0.0026

COMFORT UPS 15-14 B PM, UPS 15-14 B PM DE

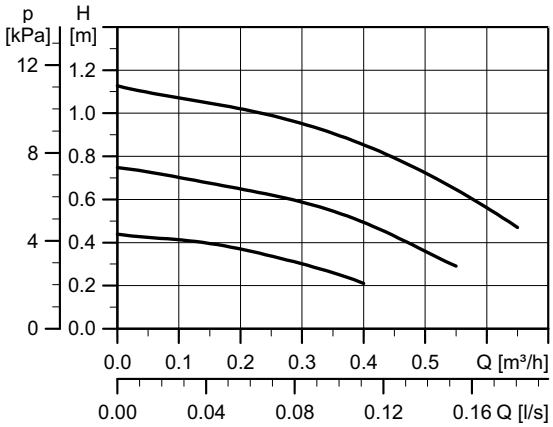

TM06 320 0715

TM05 8544 2013

Connections: Various fittings, see page 27.
System pressure: Max. 10 bar.
Liquid temperature: 2-95 °C (TF 95).

Electrical data, 1 x 230 V, 50/60 Hz

P1 - speed 1/2/3 [W]	$I_{1/1}$ - speed 1/2/3 [A]
2.5 / 4 / 6	0.04 / 0.05 / 0.07

Dimensions

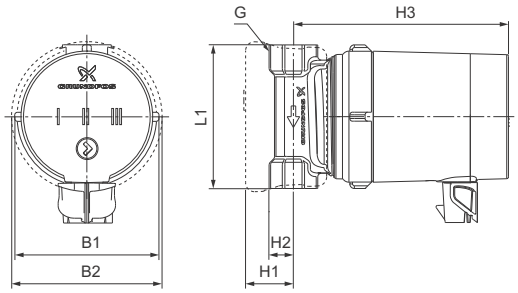

TM06 3435 0215

Pump type	Dimensions [mm]							Weights [kg]		Shipping volume [m³]
	L1	H1	H2	H3	B1	B2	G	Net	Gross	
UPS 15-14 B PM UPS 15-14 B PM DE	80	25	13.5	119	79.5	84	Rp 1/2	1.00	1.12	0.0026

COMFORT UP 20-14 BX PM

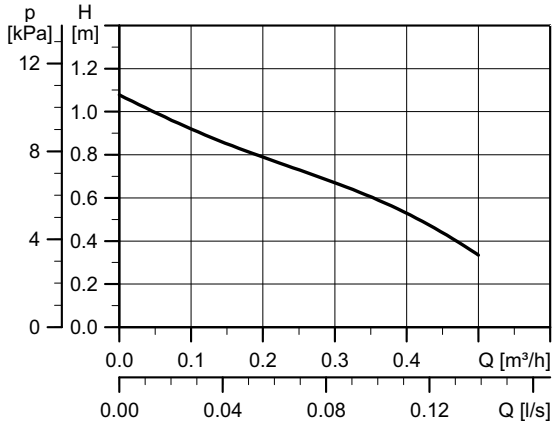

TM06 3623 0715

TM05 8549 2013

Electrical data, 1 x 230 V, 50/60 Hz

P1 [W]	$I_{1/1}$ [A]
7	0.07

Connections: Various fittings, see page 27.
System pressure: Max. 10 bar.
Liquid temperature: 2-95 °C (TF 95).

Dimensions

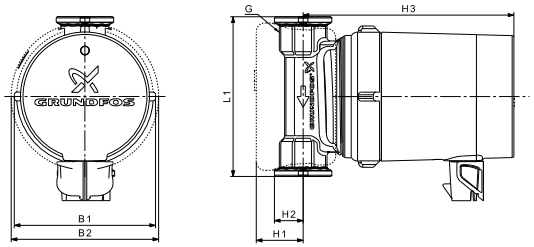

TM05 2202 4611

Pump type	Dimensions [mm]							Weights [kg]		Shipping volume [m³]
	L1	H1	H2	H3	B1	B2	G	Net	Gross	
UP 20-14 BX PM	110	25	21	119	79.5	84	G 1 1/4	1.35	1.51	0.0034

COMFORT UP 20-14 BXA PM, UP 20-14 BXA PM DE

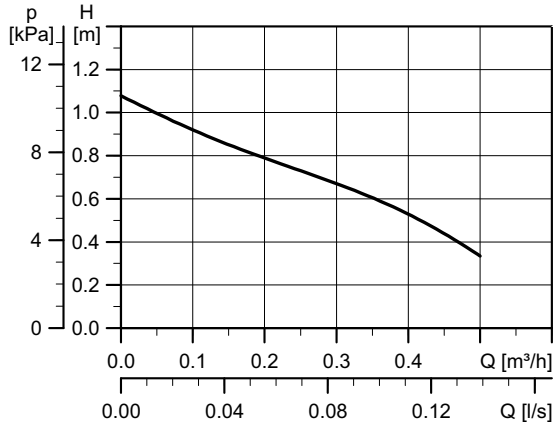

TM06 3623 0715

TM06 3318 4114

Electrical data, 1 x 230 V, 50/60 Hz

P1 [W]	$I_{1/1}$ [A]
7	0.07

Dimensions

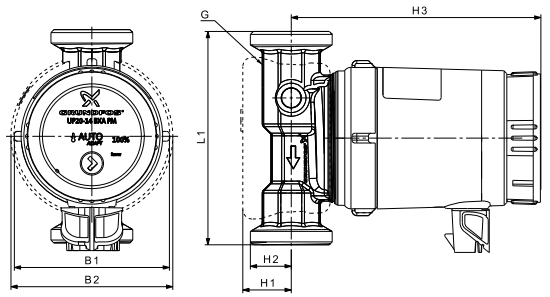

TM05 1651 3411

Connections: Various fittings, see page 27.
System pressure: Max. 10 bar.
Liquid temperature: 2-95 °C (TF 95).

Pump type	Dimensions [mm]							Weights [kg]		Shipping volume [m³]
	L1	H1	H2	H3	B1	B2	G	Net	Gross	
UP 20-14 BXA PM UP 20-14 BXA PM DE	110	25	21	129	79.5	84	G 1 1/4	1.35	1.51	0.0034

COMFORT UPS 20-14 BX PM, UPS 20-14 BX PM DE

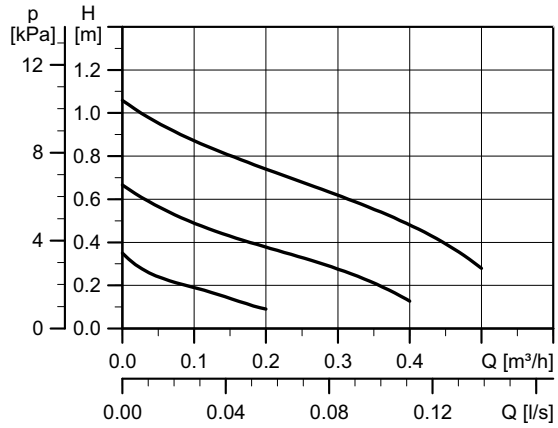

TM06 3621 0715

TM06 3319 5114

Connections: Various fittings, see page 27.
System pressure: Max. 10 bar.
Liquid temperature: 2-95 °C (TF 95).

Electrical data, 1 x 230 V, 50/60 Hz

P1 - speed 1/2/3 [W]	$I_{1/1}$ - speed [A]
2.5 / 4 / 6	0.04 / 0.05 / 0.07

Dimensions

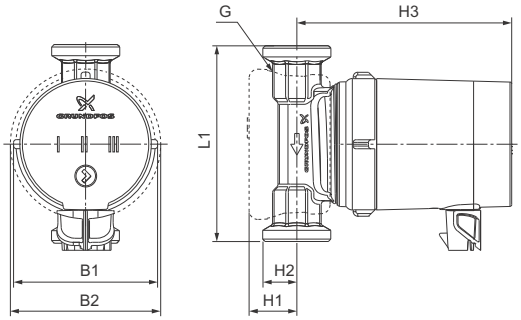

TM06 3434 0215

Pump type	Dimensions [mm]							Weights [kg]		Shipping volume [m³]
	L1	H1	H2	H3	B1	B2	G	Net	Gross	
UPS 20-14 BX PM UPS 20-14 BX PM DE	110	25	21	119	79.5	84	G 1 1/4	1.00	1.12	0.0026

COMFORT UPS xx-14 MB PM DE

Note:

- Performance curve for pump housing DN 15, see COMFORT UPS 15-14 B PM, UPS 15-14 B PM DE on page 15.
- Performance curve for pump housing DN 20, see COMFORT UPS 20-14 BX PM, UPS 20-14 BX PM DE on page 18.

Electrical data, 1 x 230 V, 50/60 Hz

P1 - speed 1/2/3 [W]	$I_{1/1}$ [A]
2.5/4/6	0.04/0.05/0.07

Dimensions

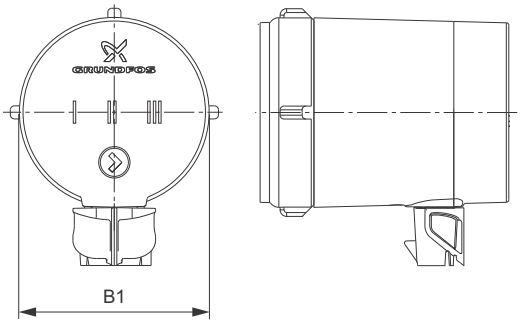

TM06 3289 5014

TM05 8550 2013

Connections: Various fittings, see page 27.
System pressure: Max. 10 bar.
Liquid temperature: 2-95 °C (TF 95).

Pump type	Dimensions [mm]							Weights [kg]		Shipping volume [m^3]
	L1	H1	H2	H3	B1	B2	G	Net	Gross	
UPS xx-14 MB PM DE	-	-	-	(119)	79.5	-	-	0.43	0.44	0.0026

COMFORT UP 10-16 PM B5/LC

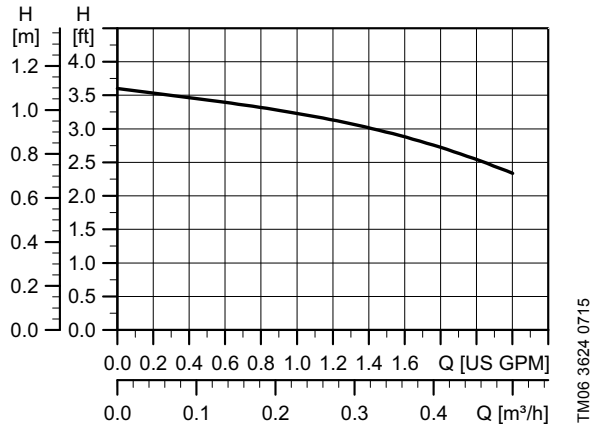

Electrical data, 1 x 115/230 V, 50/60 Hz

P1 [W]	$I_{1/1}$ [A]
6	0.10 / 0.07

Connections: 1/2" internal thread
System pressure: 145 psi
Liquid temperature: +2 °C to +80 °C / +35 °F to +176 °F

Dimensions

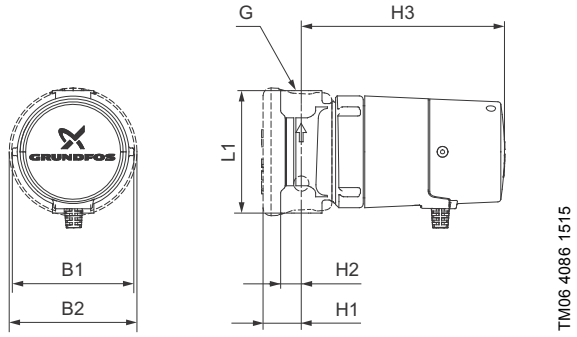

Pump type	Dimensions [inches]							Weights [lb]		Shipping volume [ft³]
	L1	H1	H2	H3	B1	B2	G	Net	Gross	
UP 10-16 PM B5/LC	3 1/8	1	1/2	5 1/4	3	3 1/3	1/2"★	2.6	2.9	0.116

★ Internal thread

COMFORT UP 10-16 PM BN5/LC

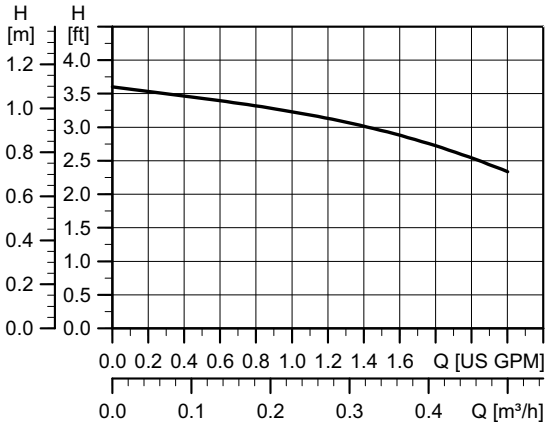

TM06 3624 0715

TM06 5324 4315

Electrical data, 1 x 115/230 V, 50/60 Hz

P1 [W]	$I_{1/1}$ [A]
6	0.10 / 0.07

Connections: 1/2" NPT
System pressure: Max. 145 psi
Liquid temperature: +2 °C to +80 °C / +35 °F to +176 °F

Dimensions

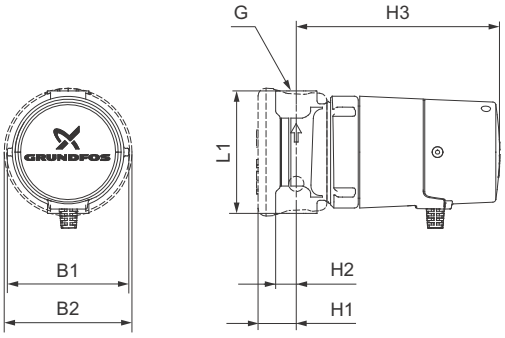

TM06 4086 1515

Pump type	Dimensions [inches]							Weights [lb]		Shipping volume [ft³]
	L1	H1	H2	H3	B1	B2	G	Net	Gross	
UP 10-16 PM BN5/LC	3 1/8	1	1/2	5 1/4	3	3 1/3	1/2" NPT	2.6	2.9	0.116

COMFORT UP 10-16 PM BU/LC

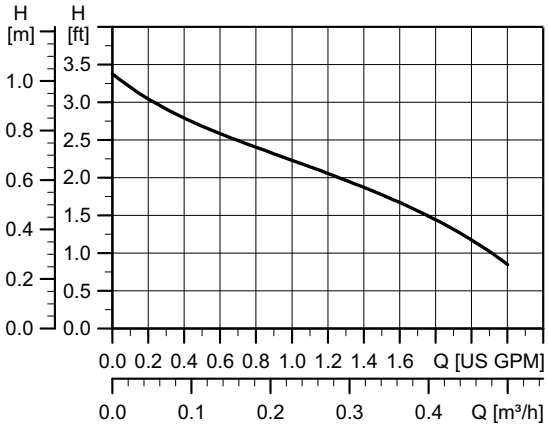

TM06 3625 0715

TM06 5324 4315

Electrical data, 1 x 115/230 V, 50/60 Hz

P1 [W]	$I_{1/1}$ [A]
6	0.10 / 0.07

Connections: 1/2" NPT
System pressure: Max. 145 psi
Liquid temperature: +2 °C to +80 °C / +35 °F to +176 °F

Dimensions

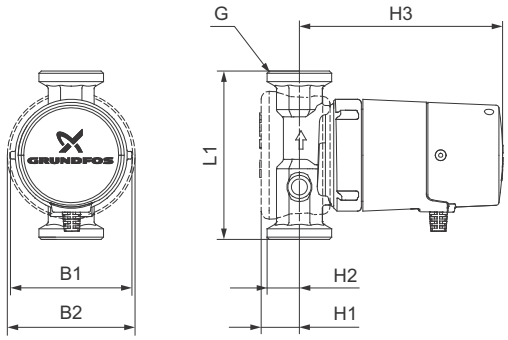

TM06 4087 1515

Pump type	Dimensions [inches]							Weights [lb]		Shipping volume [ft³]
	L1	H1	H2	H3	B1	B2	G	Net	Gross	
UP 10-16 PM BU/LC	4 1/3	1	7/8	5 1/4	3	3 1/3	1/2" NPT	3.4	3.8	0.152

COMFORT UP 10-16 A PM B5/LC

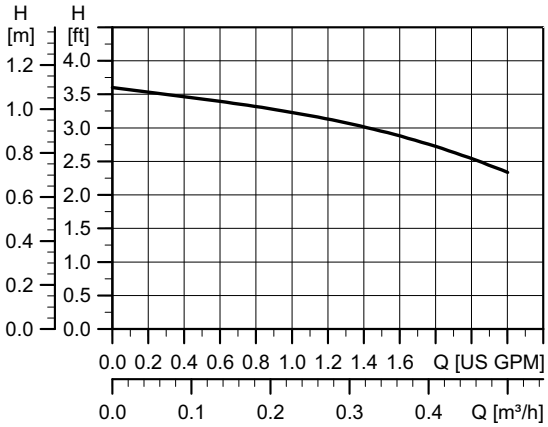

TM06 3624 0715

TM06 5323 4315

Electrical data, 1 x 115/230 V, 50/60 Hz

P1 [W]	$I_{1/1}$ [A]
6	0.10 / 0.07

Connections: 1/2" internal thread
System pressure: Max. 145 psi
Liquid temperature: +2 °C to +80 °C / +35 °F to +176 °F

Dimensions

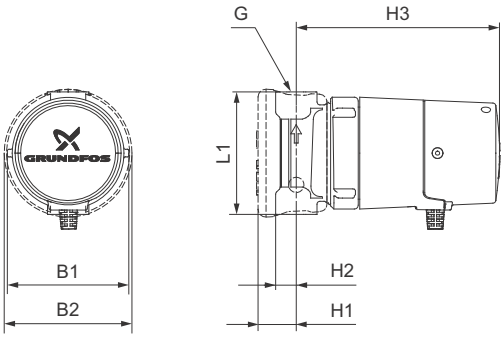

TM06 4086 1515

Pump type	Dimensions [inches]							Weights [lb]		Shipping volume [ft³]
	L1	H1	H2	H3	B1	B2	G	Net	Gross	
UP 10-16 A PM B5/LC	3 1/8	1	1/2	5 1/4	3	3 1/3	1/2"★	2.6	2.9	0.116

★ Internal thread

COMFORT UP 10-16 A PM BN5/LC

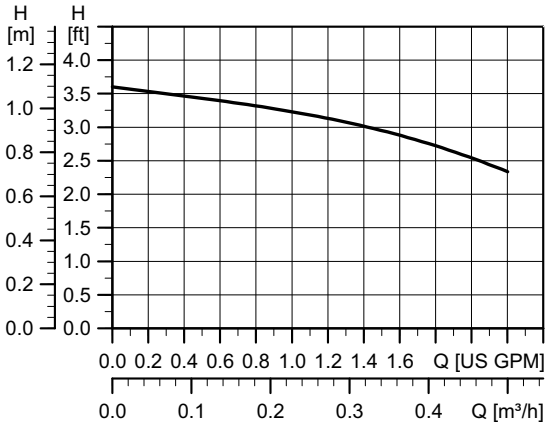

TM06 3624 0715

TM06 5323 4315

Electrical data, 1 x 115/230 V, 50/60 Hz

P1 [W]	$I_{1/1}$ [A]
6	0.10 / 0.07

Connections:	1/2" NPT
System pressure:	Max. 145 psi
Liquid temperature:	+2 °C to +80 °C / +35 °F to +176 °F

Dimensions

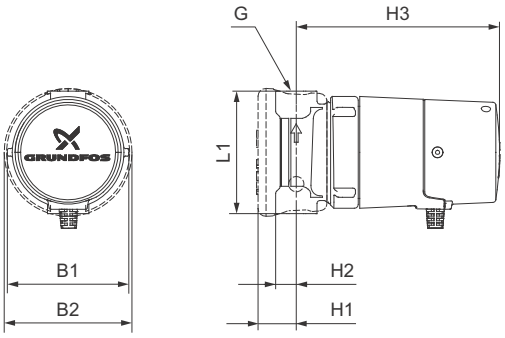

TM06 4086 1515

Pump type	Dimensions [inches]							Weights [lb]		Shipping volume [ft³]
	L1	H1	H2	H3	B1	B2	G	Net	Gross	
UP 10-16 A PM BN5/LC	3 1/8	1	1/2	5 1/4	3	3 1/3	1/2" NPT	2.6	2.9	0.116

COMFORT UP 10-16 A PM BU/LC

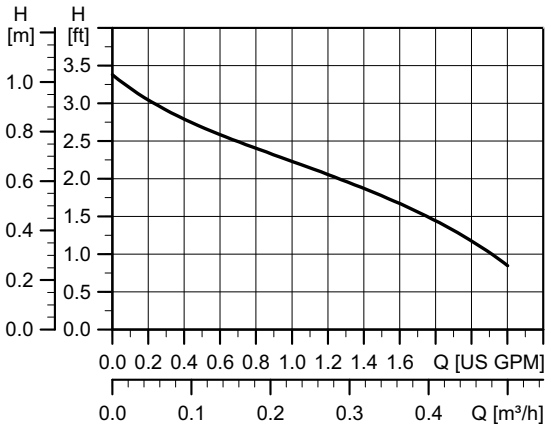

TM06 3625 0715

TM06 5323 4315

Electrical data, 1 x 115/230 V, 50/60 Hz

P1 [W]	$I_{1/1}$ [A]
6	0.10 / 0.07

Connections: 1 1/4" NPSM
System pressure: Max. 145 psi
Liquid temperature: +2 °C to +80 °C / +35 °F to +176 °F

Dimensions

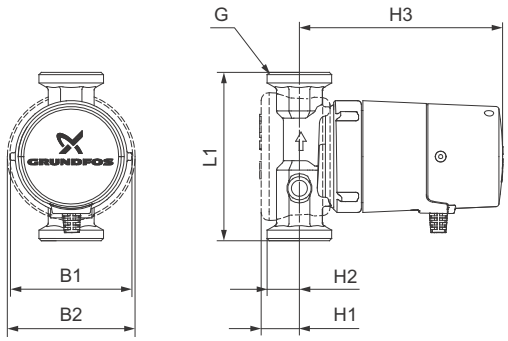

TM06 4087 1515

Pump type	Dimensions [inches]							Weights [lb]		Shipping volume [ft³]
	L1	H1	H2	H3	B1	B2	G	Net	Gross	
UP 10-16 A PM BU/LC	4 1/3	1	7/8	5 1/4	3	3 1/3	1 1/4"★	3.4	3.8	0.152

★ NPSM

7. Product numbers

UP(S), international, Germany, China, 50/60 Hz

Market region	Pump type	Product number	Port-to-port length [mm]	Connection	Accessories	Data sheet
International	UP 15-14 B PM	97916771	80 mm	1/2"	Plug-in timer available for all products. See page 28	page 13
	UP 15-14 BA PM	97916757				page 14
	UPS 15-14 B PM	98492992				page 15
	UP 20-14 BX PM	97916772	110 mm	1 1/4"		page 16
	UP 20-14 BXA PM	97916749				page 17
	UPS 20-14 BX PM	98492994				page 18
Germany	UP 15-14 BA PM DE	97989267	80 mm	1/2"		page 14
	UPS 15-14 B PM DE	98358985				page 15
	UP 20-14 BXA PM DE	97989268	110 mm	1 1/4"		page 17
	UPS 20-14 BX PM DE	98358987				page 18
	UPS xx-14 MB PM DE	98417777	-	-		page 19
China	UP 15-14 B PM CN	98485504	80 mm	1/2"		page 13
	UP 15-14 BA PM CN	98485557				page 14

UP, USA, 50/60 Hz

Market region	Pump type	Product number	Port-to-port length [inches]	Connection	Supplied with: Line cord Plug	Supplied with: Isolating valve Non-return valve	Data sheet
USA*	UP 10-16 PM B5/LC	98420206	3 1/8"	1/2"**	●		page 20
	UP 10-16 PM BN5/LC	98420210		1/2" NPT	●		page 21
	UP 10-16 PM BU/LC	98420221		1/2" NPT	●	●	page 22
	UP 10-16 A PM B5/LC	98420222		1/2"**	●		page 23
	UP 10-16 A PM BN5/LC	98420223		1/2" NPT	●		page 24
	UP 10-16 A PM BU/LC	98420224	4 1/3"	1 1/4" NPSM	●	●	page 25

* Lead-free pump housing
** Internal thread

8. Accessories

Fittings

Pump type	Fitting		Description	Connection	Material	Product number
UP 15-XX	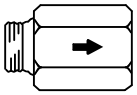	TM01 8647 0300	Non-return valve	1/2	MS	96433904
	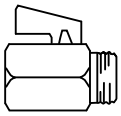	TM01 8648 0300	Isolating valve	1/2	MS	96433905
UP 20-XX	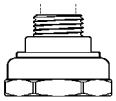	TM01 8643 0300	Union set	G 1 1/4 x 15 mm int. / R 1/2 ext.	MS	96433907
	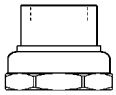	TM01 8644 0300	Union set	G 1 1/4 x Rp 3/4 int.	MS	96433908
	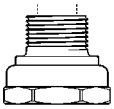	TM01 8645 0300	Union set	G 1 1/4 x Rp 1/2 int. / R 3/4 ext.	MS	96433909
UP 15-XX UP 20-XX	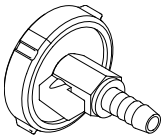	TM01 8560 0300	Venting flange	Flange Union nut Hose	PP CuZn40Pb2 PE	96433906

Service kit for plug

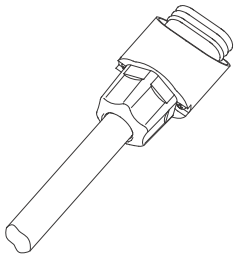

TM01 9911 3400

Type	Product number
Spare plug, COMFORT UP(S) PM	98685259
Connection set for COMFORT (80 pcs)	98890117

Plug-in timer

Plug-in timer to fit 50 Hz household power. See table to find the product to fit country-specific power outlets.

The timer only counts time when it is connected to a power source. There is no battery in the timer.

TM05 8845 2813

Country	Product number
Italy	98465219
Switzerland	98465222
France, Belgium	98465224
UK	98465225
Denmark	98465226
Germany	98465228

9. Grundfos Product Center

Online search and sizing tool to help you make the right choice.

http://product-selection.grundfos.com

"SIZING" enables you to size a pump based on entered data and selection choices.

"REPLACEMENT" enables you to find a replacement product.
Search results will include information on

- the lowest purchase price
- the lowest energy consumption
- the lowest total life cycle cost.

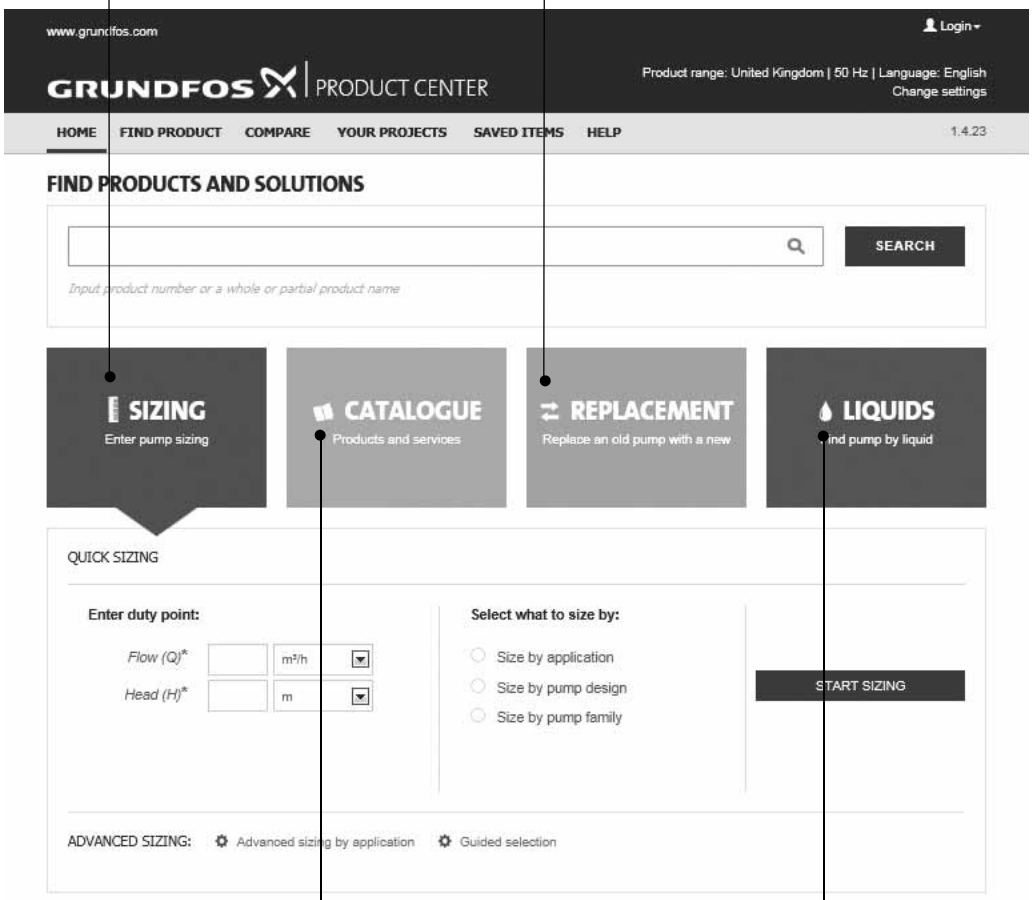

"CATALOGUE" gives you access to the Grundfos product catalogue.

"LIQUIDS" enables you to find pumps designed for aggressive, flammable or other special liquids.

All the information you need in one place

Performance curves, technical specifications, pictures, dimensional drawings, motor curves, wiring diagrams, spare parts, service kits, 3D drawings, documents, system parts. The Product Center displays any recent and saved items - including complete projects - right on the main page.

Downloads

On the product pages, you can download installation and operating instructions, data booklets, service instructions, etc. in PDF format.

Subject to alterations.

be think innovate

© Copyright Grundfos Holding A/S

The name Grundfos, the Grundfos logo, and **be think innovate** are registered trademarks owned by Grundfos Holding A/S or Grundfos A/S, Denmark. All rights reserved worldwide.

98553150 1015

ECM: 1168459

GRUNDFOS A/S
DK-8850 Bjerringbro . Denmark
Telephone: +45 87 50 14 00
www.grundfos.com

GRUNDFOS

Hot Water Recirculation

– The traditional HWR solution

Grundfos innovation offers the only traditional recirculation solution that provides all the answers in one package. Utilizing the UP10-16BU ATLC makes your hot water recirculation needs a snap. You install the dedicated return line, and the circulator does the rest!

Features

- Quick and easy installation
- Whisper quiet operation
- Built-in timer, line-cord and aquastat
- Unique wet rotor design
- Aquastat control ensures optimum operation
- Includes check valve to eliminate back flow
- Integral isolation valve for ease of installation
- Saves up to 12,000 gallons of water per year

For more information: www.grundfos.us/hwr

UP 10-16BU ATLC (Part# 96433899)
Built-in timer, line-cord, and aquastat

c UL us LISTED

CLASSIFIED UL Water Quality ANSI/NSF61

CE

– How Traditional Hot Water Recirculation Works

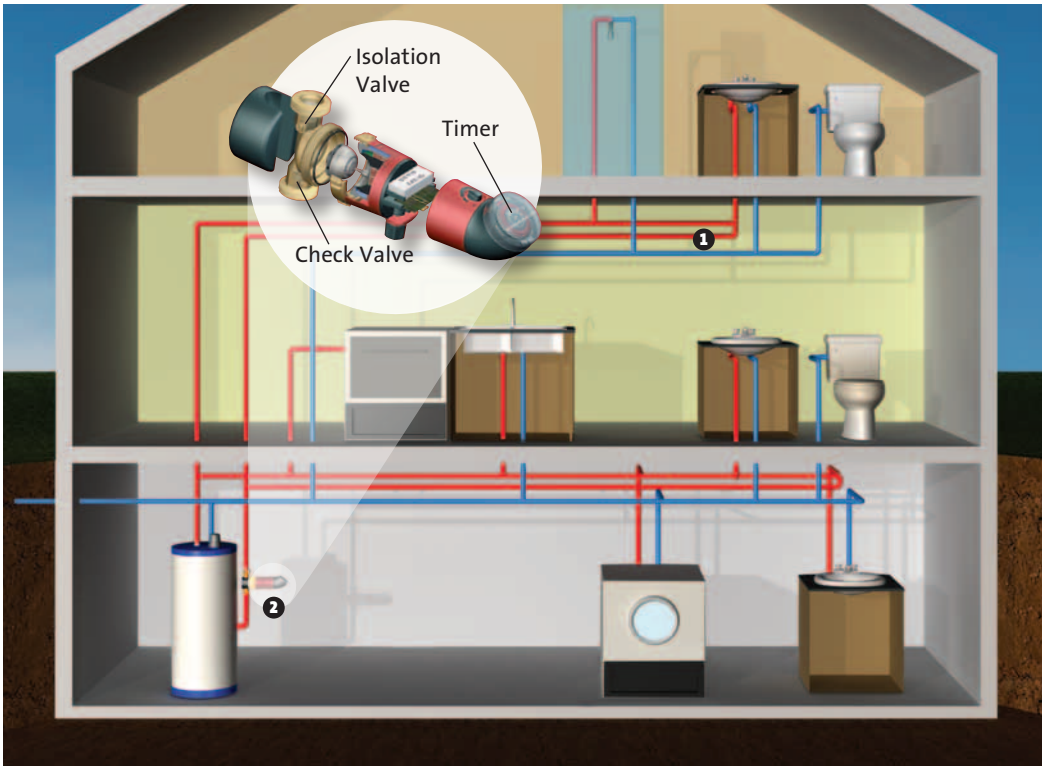

THE GRUNDFOS UP10-16BU ATLC

❶ **pipes:** Traditional HWR systems require a dedicated return-line to be installed from the end of the hot water supply back to the water heater.

❷ **pump:** A pump is used to circulate water through the main hot water line and back to the water heater.

A timer, aquastat, or both may be used to control the operation of the pump. The Grundfos UP10-16BU ATLC has all of these components built-in the pump.

Pump Technical Data:

Flow Range:	0 to 3.5 U.S. GPM
Head Range:	1 to 5 U.S. Feet
Motor:	25W, Single Phase, 115V
Min. Fluid Temperature:	36°F (2°C)
Max. Fluid Temperature:	203°F (95°C)
Max. Working Pressure:	145 PSI
Standard Features:	5ft. line-cord w/plug
Optional Features:	Timer, Aquastat

Performance Curve:

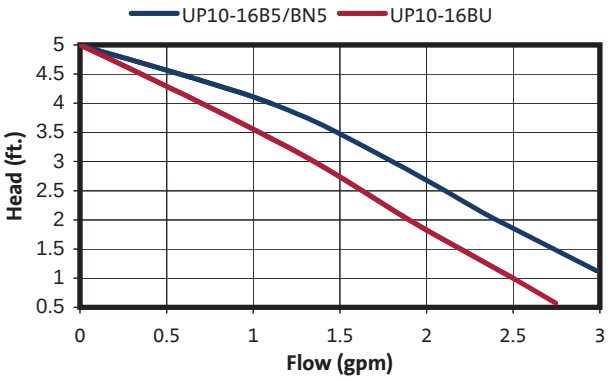

Models	Material Number	1/2" Sweat	1/2" F NPT	1 1/4" Union	Line Cord	Timer	Aquastat	Check Valve	Isolation Valve
UP10-16B5 LC	96433894	•			•				
UP10-16B5 TLC	96433895	•			•	•			
UP10-16B5 ATLC	96433896	•			•	•	•		
UP10-16BN5 LC	96433897		•		•				
UP10-16BN5 TLC	96433898		•		•	•			
UP10-16BN5 ATLC	96433899		•		•	•	•		
UP10-16BU ATLC	96433902			•	•	•	•	•	•

L-UP-SL-021 9/08 (US)

U.S.A.
GRUNDFOS Pumps Corporation
17100 West 118th Terrace
Olathe, Kansas 66061
Phone: (913) 227-3400
Telefax: (913) 227-3500

Canada
GRUNDFOS Canada Inc.
2941 Brighton Road
Oakville, Ontario
L6H 6C9
Phone: (905) 829-9533
Telefax: (905) 829-9512

Mexico
Bombas GRUNDFOS de Mexico S.A. de C.V.
Boulevard TLC No. 15
Parque Industrial Stiva Aeropuerto
C.P. 66600 Apodaca, N.L. Mexico
Phone: 011-52-81-8144 4000
Telefax: 011-52-81-8144 4010

www.grundfos.com

GRUNDFOS®

SECTION 22 11 13
Plumbing Manifold

Viega MANABLOC®

A unique system designed for
dramatic water and energy savings.

The global leader in plumbing and heating systems

viega

Viega MANABLOC®
Parallel Water Distribution System

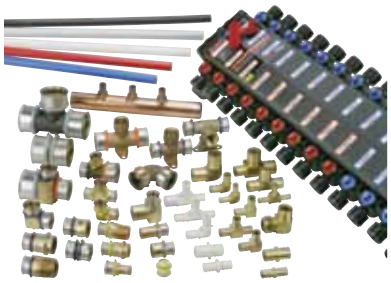

MINIBLOC®

MANABLOC Port Connections

Bronze PEX Press

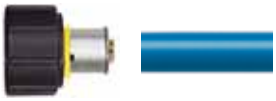

Brass PEX Crimp

PolyAlloy PEX Crimp

PEX Compression

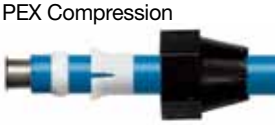

Viega was the first in the industry to develop a parallel water distribution system known as the MANABLOC.

A MANABLOC system uses a home-run concept with dedicated lines to each fixture in a home with the following benefits:

- 3/8" or 1/2" PEX lines available to supply required fixture demands, ensuring optimal efficiency.
- Flexible PEX tubing makes installations fast and easy to install.
- Quiet operation with minimized flow noise compared to copper tubing.
- Complies with most green efficiency code supplements.
- Faster hot water delivery is possible through dedicated lines to each plumbing fixture.

How does the Viega MANABLOC stand up against the competition?

- Manifolds are fully assembled and tested at the factory and include individual port shut-off valves.
- With the industry's largest internal reservoir (1-1/4"), less dramatic temperature and pressure changes will be recognized.
- Fewer behind-the-wall fittings.
- Components used in the MANABLOC system are designed to resist scaling and corrosion.
- Multiple port connection options are available.
- Recognized third-party system listing ensures code compliance, compatibility and warranty for all Viega components.
- Entire water distribution system controlled from one location.
- Transferable 10-year warranty.

Discover how Viega PureFlow® plumbing systems technology will maximize customer's satisfaction. Visit www.viega.com or call 1-800-976-9819

Why 3/8" Tubing?

Volume stored in 50 ft of PEX tubing:

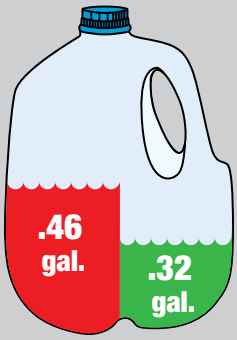

1/2" vs. 3/8"

The benefits of 3/8" tubing:

- Ideal for use with low demand fixtures
- Twice-as-fast hot water delivery
- Less water wasted down the drain

Viega
301 N. Main, 9th Floor
Wichita, KS 67202

Tel: 1-800-976-9819
Fax: 1-316-425-7618
www.viega.com
insidesales@viega.com

Use Microsoft Tag to learn more.

The global leader in plumbing and heating systems

viega

PureFlow®

MANABLOC® Manifold Plumbing System

viega

PureFlow SYSTEMS

Installation Manual

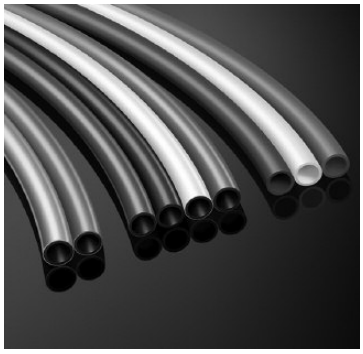

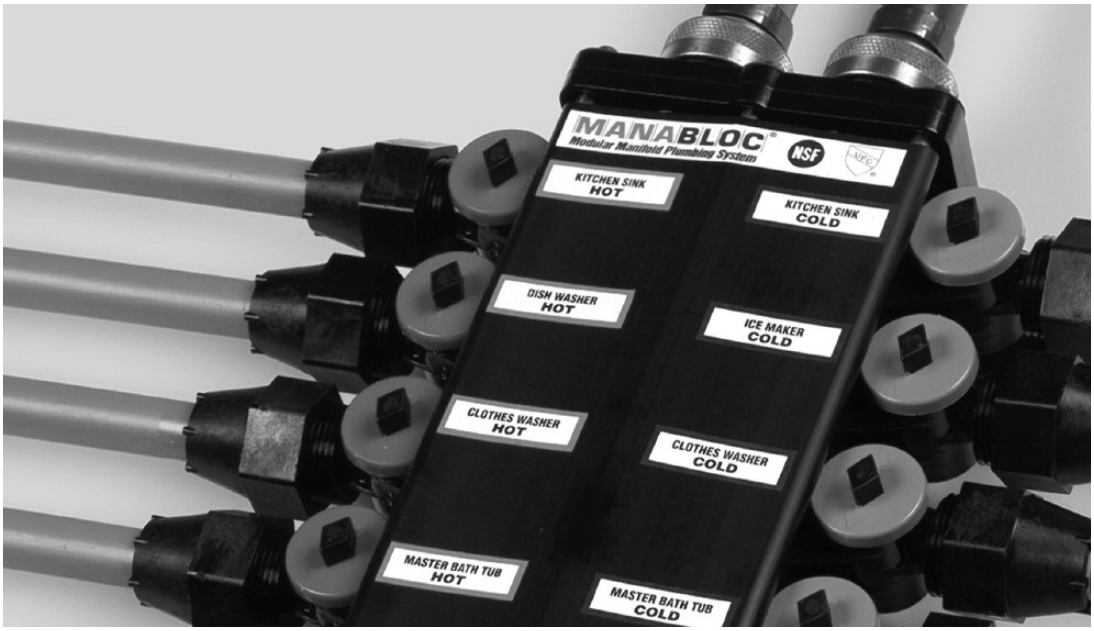

October, 2007

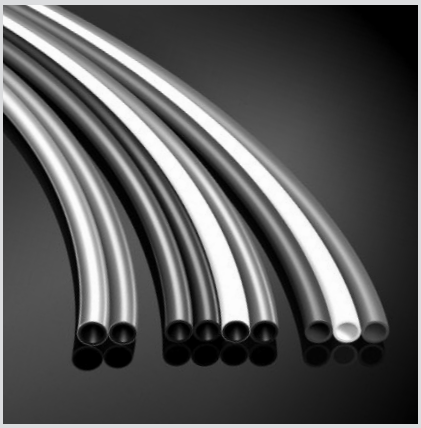

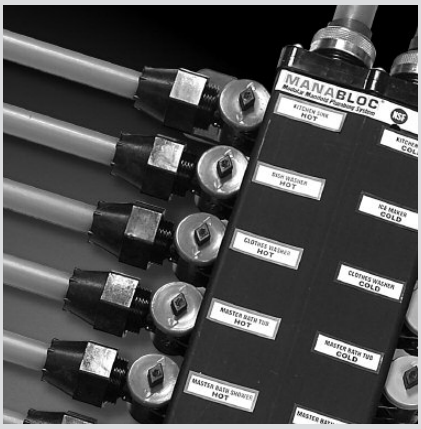

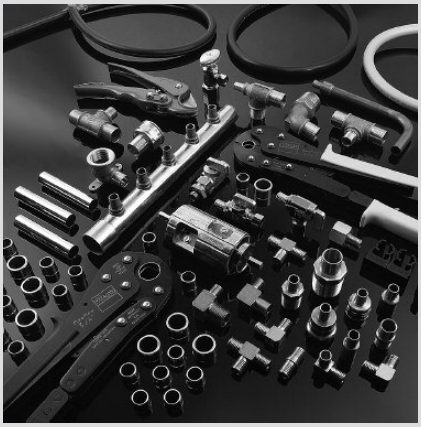

Pure*Flow* is a registered trademark of Viega LLC
MANABLOC is a registered trademark of Viega LLC
ViegaPEX is a trademark of Viega LLC
FostaPEX is a registered trademark of Viega GmbH & Co. KG
Copyright March 2007 Viega LLC, All rights reserved.

Working with Viega is the perfect solution.

Viega researches, develops and produces complete system solutions for contractors. The components are produced at our plants or are supplied exclusively by the finest quality manufacturers. Each of our systems is developed in-house and tested under stringent quality control conditions to guarantee safety and efficient operation.

An international company with a national commitment.

Viega Pure*Flow* plumbing combines technology from both sides of the Atlantic into the very best PEX plumbing systems for our customers.

Viega's reach extends throughout North America with distribution across the US, Canada and Mexico. Our network of sales experts and wholesale distributors can meet your needs whether you are in Boston or Berkeley. The products we deliver are the finest quality offered at a highly competitive price. Our goal is to remain on the forefront of the plumbing industry well into the new century, and with our advanced products and a determination to remain the quality leader, we are convinced this accomplishment is well within our reach.

Call 877-VIEGA-NA for your local representative and wholesale location.

Why you can depend on Viega Pure*Flow*.

- A safe system
- Competitively priced
- Leak proof fitting connection
- Highly flexible and kink resistant
- Lightweight and easy to handle
- Fast and solder free installation
- No open flame during installation
- Reduced number of fittings used in wall
- Water Savings
- Long life expectancy
- Quick Hot Water Delivery
- Non-corroding
- Reduced flow noises
- In coils or straight lengths
- FostaPEX form stable tubing ideal for exposed runs
- Listed by NSF to meet the requirements of ANSI 14 and 61 and NSF Protocol P171 (CL-R/CL-TD)
- Listed to ASTM F876/F2023 and F877

IMPORTANT NOTICE

This installation guide is intended for the MANABLOC® Manifold Plumbing System, including the MINIBLOC Manifold Plumbing System Installation Instructions.

NOTE: References to ViegaPEX™ tubing made throughout this publication include the entire line of Viega cross-linked polyethylene products.

IN THE EVENT OF CONFLICT OR INCONSISTENCY BETWEEN THESE INSTALLATION GUIDELINES AND LOCAL BUILDING OR PLUMBING CODES, LOCAL CODES SHOULD TAKE PRECEDENCE.

NOTE: Failure to follow the installation instructions will void the Viega Plumbing Warranty. NOTHING IN THIS PUBLICATION IS INTENDED TO CREATE ANY WARRANTY BEYOND VIEGA'S APPLICABLE WRITTEN WARRANTY.

For additional information, contact Viega at 877-VIEGA-NA.

CONTENTS

1 Introduction

1.1 Viega 4
1.2 Pure*Flow* System Concepts. 5

2 Green Building

2.1 General 6
2.2 Structured Plumbing 6
2.2.1 Parallel Systems. 6
2.2.2 Branch and Main Systems 7
2.2.3 Combination Systems 7
2.2.4 Domestic Hot water Circulating Systems 8

3 Code Compliance

3.1 Plumbing Code Compliance (Parallel Systems) 9
3.2 Sizing of Parallel Water Distribution Systems (MANABLOC) 9
3.3 Valve Requirements for Parallel Systems 9

4 The MANABLOC

4.1 The MANABLOC. 10
4.2 PureFlow PEX Tubing. 10
4.3 Supply And Distribution Line Sizing. 10
4.4 Overview And Carton Contents. 11
4.5 Location. 11
4.6 Valve Operation. 12
4.7 Domestic Hot Water Circulation Systems 13
4.8 Multiple MANABLOC Installations 13
4.9 ViegaPEX General Design/Installation Practices 13

5 Mounting the MANABLOC

5.1 Mounting The MANABLOC Between Studs 15
5.2 Mounting The MANABLOC Without Use Of MBB2 Straps 17
5.3 Surface Mounting The MANABLOC 17

6 Installing Distribution Lines

6.1 Installing Distribution Lines 19
6.2 Connecting Distribution Lines to the MANABLOC 19
6.2.1 Compression Connections (3/8" & 1/2" ports) 20
6.2.2 PEX Press Connections (1/2" ports) 20
6.2.3 PEX Crimp Connection (1/2" ports) 21
6.2.4 Crimp Connection (3/8" ports) 21
6.3 Connecting Distribution Lines To Fixtures 22
6.4 Water Supply Connections 23

7 Filling and Testing. 25

8 System Disinfection

8.1 General 26

Terms Used In This Guide:

PEX	ViegaPEX cross-linked polyethylene tubing
AHJ	Authority Having Jurisdiction
PPM	Parts Per Million
NSF	NSF International, Inc. (formerly National Sanitation Foundation)
CAN/CSA	Canadian Standards Association
"shall"	Required; a mandatory procedure
"may" or "should"	A suggested optional procedure

1. INTRODUCTION

1.1 Viega

For over 100 years, Viega has been a globally trusted name in the plumbing industry.

Through innovative techniques, sophisticated technologies, and acquisition of the top PEX plumbing products in the US, Viega has become the industry leader for PEX plumbing.

Viega produces a comprehensive range of plumbing and heating equipment. Anywhere water flows in a building Viega manufactures a system to fit. The company's experience with press fitting technology in bronze, stainless steel, and copper led to the development of the PureFlow water distribution system. With the acquisition of Vanguard Piping Systems and the integration of their PEX plumbing products into the PureFlow line, Viega is now positioned as the number one supplier of PEX plumbing systems in North America.

Today, Viega engineers and manufactures over 12,000 system components at five state-of-the-art factories including our PEX tubing facility located in the heart of the US. Viega quality has proven itself in millions of systems installed around the world. Viega has a history in North America of technological innovation and customer service that is second to none.

The Viega product line now is comprised of multiple brands; ProPress® flameless copper joining technology; PureFlow® flexible PEX tubing plumbing technology; ProRadiant comfortable efficient heating technology; and S-no-Ice® snow and ice melting technology, to name a few.

Each line is selected so that components work together to create a complete system concept. Pure*Flow* plumbing provides complete PEX systems for potable water distribution, including manifolds, PEX and multilayer tubing, fittings, and valves. The ProRadiant program includes a wide range of hydronic radiant systems and controls as well as thermostats.

In addition, the Viega S-no-Ice line includes snow and ice detection controls, heat exchangers, and snow melting systems.

As the pioneer in combining technology and engineering expertise from both sides of the Atlantic into the very best systems for our customers in North America, we are proud to present you the world's finest potable water distribution systems: Pure*Flow*. The name says it all.

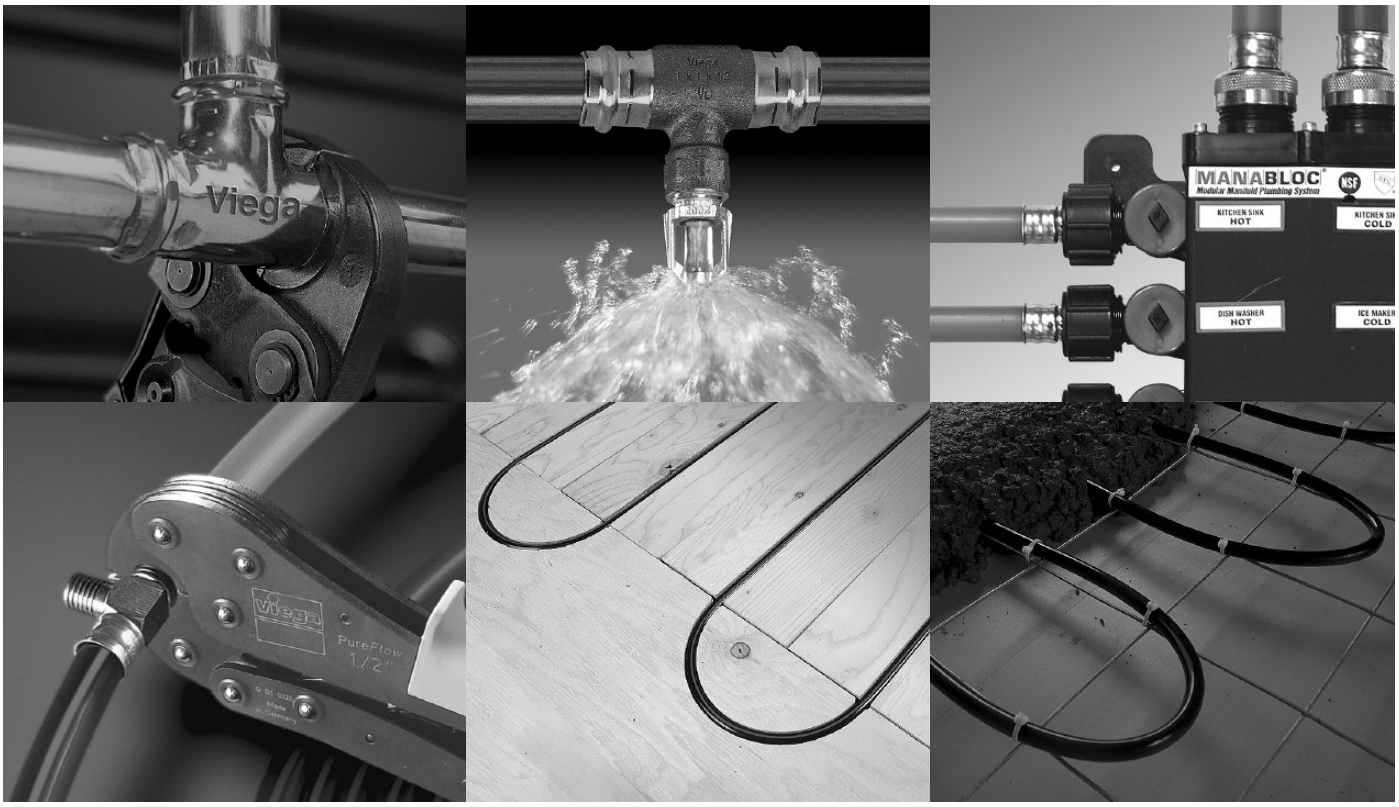

1.2 Pure*Flow* System Concepts

ViegaPEX Pure*Flow* is a high quality flexible PEX system for hot and cold potable water distribution.

The Pure*Flow* plumbing system offers maximum security thanks to cold press and full circle crimp fitting techniques. These fittings guarantee shorter installation times for all types of applications, and vastly reduces the required number of fittings.

Top quality materials such as brass, bronze, stainless steel, and durable, environmentally compatible plastics provide the basis for the very highest standards of quality at Viega.

PEX tubing offers outstanding versatility. A total of 236 million feet of PEX tubing for potable water applications was produced in 2004 alone, and provides conclusive evidence of its importance in plumbing installation. This is clearly the result of excellent workmanship, fast and simple installation and the reliability and safety which are characteristic of the Viega system concept.

The efficiency of the integrated system concept for Viega branded products is confirmed by:

- perfectly coordinated components
- quick delivery at short notice
- time-saving installation
- complete installation of an entire system from one supplier

Viega's comprehensive services include technical support and warranty coverage, subject to the exclusive use of Pure*Flow* system components.

Pure*Flow* is a high-quality plumbing system. It is able to withstand high levels of thermal and mechanical stress (80 psi at 200°F, 100 psi at 180°F, 160 psi at 73.4°F).

The systems incorporate:

- ViegaPEX tubing; red, white and blue cross-linked polyethylene tubing designed with superior chlorine resistance
- ViegaPEX Ultra tubing; red, white, blue, and black cross-linked polyethylene tubing with added resistance to UV
- Viega FostaPEX tubing; cross-linked polyethylene with additional aluminum and polyethylene layers to provide rigidity and form stability, available in red or silver to differentiate hot water lines
- A range of bronze, brass or plastic fittings for both PEX Press and PEX Crimp fitting systems
- A range of inline, manifold and stop valves for both press and crimp fitting systems
- Viega Pure*Flow* press tools and jaws for the PEX Press fitting systems
- Viega Pure*Flow* crimp tools for the PEX Crimp fitting systems

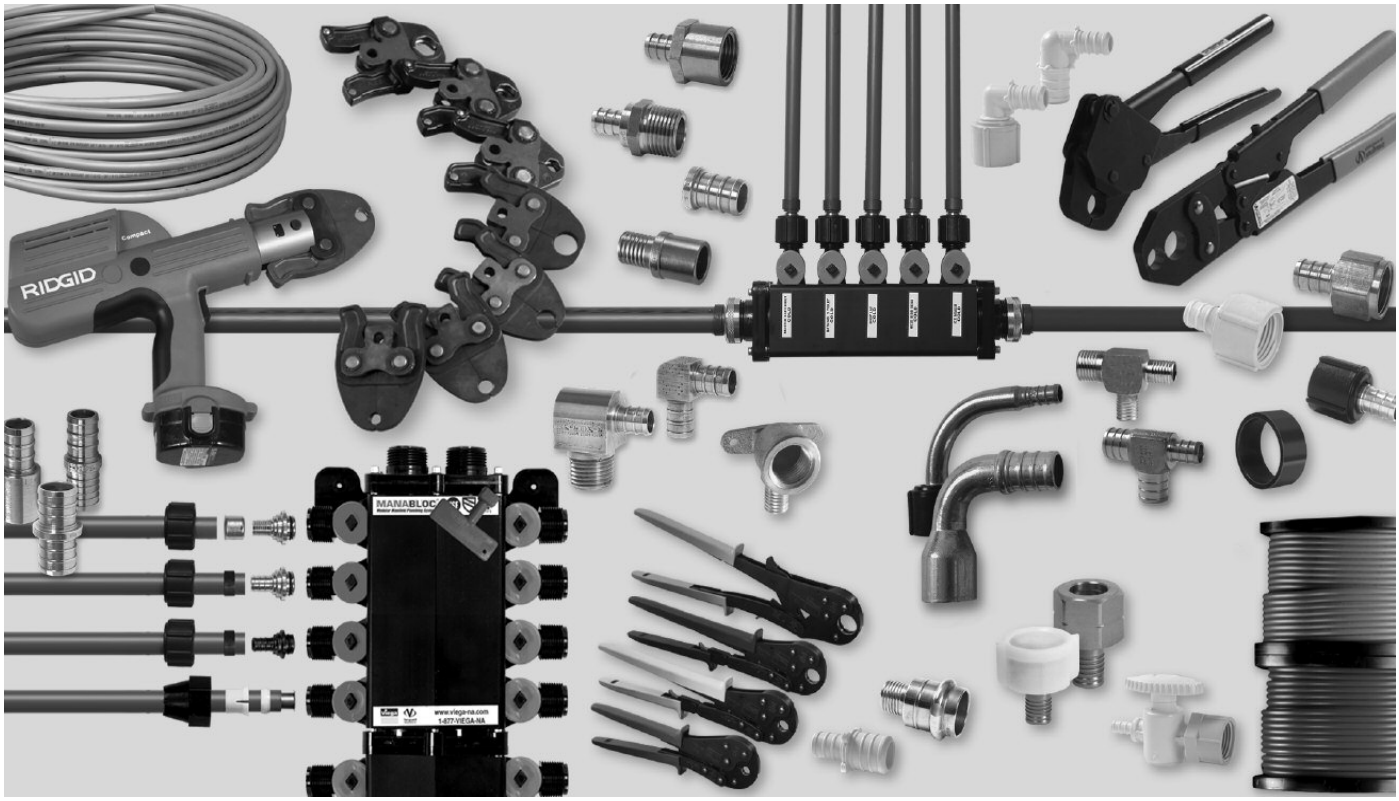

2. GREEN BUILDING

2.1 General

Green Building incorporates environmental considerations into every phase of the home building process where multiple factors are considered during construction as well as its operation and its impact on the environment. LEED® (Leadership in Energy and Environmental Design) was established by the U.S. Green Building Council (USGBC) as a system to define and measure "green building". This voluntary market driven rating system is based on existing proven technology, awarding credits for different aspects of environmental design. There are four levels of performance that can be achieved per these resource categories, they are Certified, Silver, Gold, and Platinum.

Viega's Pure*Flow* plumbing systems can be incorporated to improve both water and energy efficiency supporting this philosophy, earning your home credits toward a LEED certification level (when following LEED installation criteria). To obtain more information concerning LEED certification for your home, contact the USGBC.

The MANABLOC Manifold is a unique plumbing system that can also be incorporated to provide water and energy savings combined with a superior plumbing system for homeowners. It's a simple concept that provides extraordinary performance: each fixture is fed by its own flexible water distribution line, which runs from a central manifold. By providing each fixture with its own distribution line, the line can be sized appropriately so hot water can be delivered more rapidly. Since the line is dedicated to a single hot or cold fixture, less water is required to purge the line, which saves time, energy and can reduce water waste by up to 40% and save thousands of gallons of water per year.

Clean System And Clean Installation

The MANABLOC is preferred by many installers thanks to its fast and safe installation. There are no fumes from solvents to contend with and no torches required on site for installation. Installation time is significantly less than that of a rigid plumbing system due to the flexibility of ViegaPEX™ tubing and the simplicity of the Pure*Flow*® fitting systems. Viega tubing is color coded to make installation easier and the connection of fixtures to the proper distribution line faster and more foolproof. Homeowners can be assured of the purity of the system due to the third party NSF-61 certification carried by both the MANABLOC and ViegaPEX tubing. Homeowners also benefit from the corrosion resistance of ViegaPEX, which helps to prevent contamination of drinking water.

Fewer Fittings Behind The Wall

The MANABLOC requires fewer fittings than branch and main plumbing systems and very few are needed behind the wall. The MANABLOC is installed using flexible ViegaPEX tubing that can be bent around obstacles without the need for fittings. In most cases each dedicated line has a fitting at the MANABLOC and one at the fixture connection with no fittings located behind the walls.

Rich In Homeowner Benefits

Home Builders enjoy the many features the MANABLOC system offers their customers over branch and main plumbing systems including:

- Faster Hot Water Delivery – properly sized lines deliver hot water up to four times faster
- Better Control of the Plumbing System – individual shutoff valves provide a simple way of servicing a fixture or adding on to the system
- Quiet Operation – Flexible ViegaPEX tubing reduces water hammer noise and provides quiet operation
- Balanced Water Delivery – multiple fixtures can be used simultaneously without noticeable pressure or temperature changes.

2.2 Structured Plumbing

Structured plumbing is the practice of installing and/or designing a plumbing system in a manner that enhances the systems performance by reducing water waste and hot water delivery times. This plumbing strategy is rapidly becoming important for home builders in markets where water conservation is prevalent. Viega, being the leader in innovation and technology for the plumbing and heating systems, has embraced this philosophy with its plumbing products.

2.2.1 Parallel Systems:

Using manifolds (see illustration below), the installer can plumb a house with no fittings hidden inside walls. By installing a manifold system near the hot water source, tubing can be run directly to each fixture without using further fittings. This system provides the lowest pressure losses

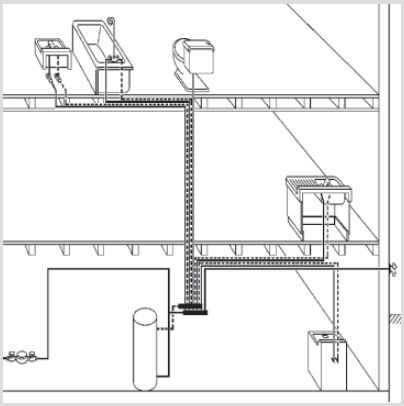

Parallel Method.

as well as eliminating interference between fixtures. Often each fixture can be fed with smaller diameter tubing which is easier and faster to install.

Design Factors For Installing A Parallel System

- **Water Heater Placement**

This should be as close as possible to the MANABLOC to minimize extra water from being stored in the larger hot water supply lines between the MANABLOC and water heater.

The longer this hot water supply line is the greater the volume of water requiring purging through the faucet before hot water is available. This causes greater water waste and longer hot water delivery times.

- **Proper Water Distribution Line Sizing To Each Fixture**

This is crucial for over all system performance. If you over size a distribution line to a fixture (1/2" PEX line supplying a sink instead of a 3/8" PEX line) you are essentially doubling the volume of water being stored in that line. This can take roughly twice as long to purge compared to properly sizing the line.

The fixture is what dictates water flow (federally mandated, governed by code). The tubing simply applies a friction lost dictated by its size and length. Therefore, as long as you do not under size a distribution line or run it excessive distances (60 feet or greater), the system will perform properly maintaining sufficient pressure and flow.

- **The Length Of A Distribution Line Run To Each Fixture**

This can drastically affect the performance of a MANABLOC system, the longer the line is the more water being stored within it, and therefore, the longer it will take to purge it out before hot water can reach the fixture.

This is just as important as properly sizing each distribution line. The MANABLOC should be located somewhat central to your fixture groups keeping within 60 feet or less of each fixture.

If you can not accomplish this with one MANABLOC you may need to use two MANABLOCs, locating one at each end of the home to split the distribution line distance between them (see section 4.8 for use of multiple MANABLOCs).

2.2.2 Branch and Main Systems

This method of plumbing is commonly referred to as a conventional plumbing system, or branch and tee systems, which uses copper/rigid tubing with tee and elbow fittings.

This system uses a large diameter "main" supply line (minimum 3/4") for both hot and cold water supplies that runs throughout a structure to or near each fixture group with smaller "branch" lines teeing off the main to supply each fixture.

While this system can reduce the amount of tubing used it requires more fittings to be used, which can increase installation time and cost.

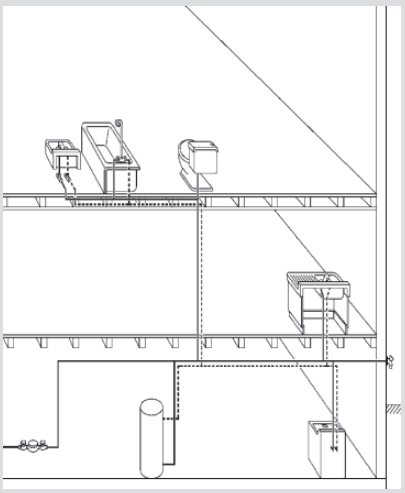

Branch Installation.

Design Factors For Installing Branch And Main Systems

- **Design the layout as condensed as possible**

Keep the main hot supply line close to the fixture groups with the branch lines shorter than 6 feet. This will help provide hot water in a reasonable amount of time with a more tolerable amount of wasted water.

The limiting factor for installers to accomplish an optimal design is how spread out the fixture groups are within the structure.

If the builder did not put any thought into keeping the fixture groups condensed, a branch and main system will have terrible hot water delivery times with substantial water waste.

If you have a floor plan that incorporates stacked or back to back fixture groups then a branch and main system can be an effective alternative to a parallel system.

One disadvantage to these systems is they store excess amounts of water in the large main lines, therefore the further away the fixture is, the longer the main supply line must be to reach it, purging all stored water out before hot water reaches the fixture.

Another trait these systems suffer from is noticeable pressure drop during multiple fixture use. When you turn on multiple fixtures you are increasing the water flow (load) within the main line, causing higher friction loss equal to pressure loss at the point of use. This is why you notice a drop in pressure (and potentially a temperature change) in your shower when a toilet is flushed.

2.2.3 Combination Systems

A combination system uses multiple manifolds combined with a branch and main type supply system. These systems use small manifolds

located throughout a structure placed near each main fixture group and are supplied by the main hot and cold supply lines similar to the branch and main system. The manifolds essentially branch multiple lines from a common location in lieu of multiple tee fittings spread out. This takes advantage of benefits from both types of systems and helps keep hidden fittings to a minimum.

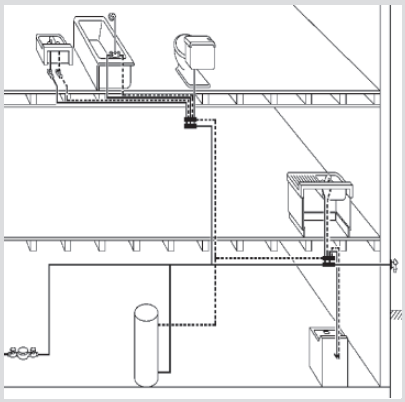

Combination Installation.

Design factors for installing combination systems

Just like the branch and main system, condensed floor plan layouts are preferable to minimize hot water main supply lines being stretched out everywhere. This additional water requires purging prior to hot water being present at each fixture. These systems can also suffer from fluctuating pressure during multiple fixture use.

2.2.4 Domestic Hot Water Circulating Systems

A hot water circulation system can be incorporated in most plumbing systems and works by constantly (or periodically throughout the day on a timer) circulating hot water through the main hot supply line of your plumbing system. This is done by use of a return line at the end of the main hot supply line, and a low flow pump (usually near the hot water tank). It keeps hot water readily available throughout the entire main hot water supply line eliminating the need to purge the entire line before hot water is present at the fixture.

There are a number of hot water circulation systems available in the market place that offer a variety of options.

These systems are ideal for branch and main or combination systems with spread out fixture groups/floor plans, as well as for larger homes using multiple MANABLOCs in a parallel type system.

Design Factors For Hot Water Circulation Systems

- **Installing a hot water circulation system**

You will want to use either a gas or electric tank water heater. Use of a tankless or instantaneous type water heater will drastically increase the operating cost of the system.

There are many types of these systems available on the market today. Research which type is best for the particular application. Insure all the components being used within the circulation system are rated and/or approved for a hot water circulation system. These systems may require some maintenance and/or repairs over time which could include complete pump replacement.

Note: There are costs associated with running these systems due to the electricity required to operate the pump, this will vary depending on the frequency of operation and size of the pump.

3. CODE COMPLIANCE

3.1 Plumbing Code Compliance (Parallel Systems)

The MANABLOC parallel water distribution system meets the ASTM F877, standard specification for cross-linked polyethylene (PEX) plastic hot and cold water distribution system utilizing ViegaPEX tubing meeting the requirements of the ASTM F876, standard specification for cross-linked polyethylene tubing.

The 2006 International Plumbing Code® (IPC) and the 2006 Uniform Plumbing Code™ (UPC) recognize and list these ASTM standards within their respective mandatory standards and/or approved material sections.

The MANABLOC is IAPMO listed to the UPC utilizing both 3/8" and 1/2" PEX tubing sizes for distribution.

3.2 Sizing of Parallel Water Distribution Systems (MANABLOC)

Sizing of Parallel Water Distribution Systems (MANABLOC) are addressed in both the IPC and UPC 2006 plumbing codes.

In the IPC, section 604.5 Size of fixture supply states, "The minimum size of individual distribution line utilized in gridded or parallel water distribution systems shall be as shown in Table 604.5." This table includes 3/8", 1/2" and 3/4" size tubing. In the UPC, section 610.4 it states, "Listed parallel water distribution systems shall be installed in accordance with their listing, but at no time shall any portion of the system exceed the maximum velocities allowed by the code." The MANABLOC's IAPMO UPC listing says to install per the manufacturers current installation instructions. Therefore, these instructions shall be used to size and install these types of systems.

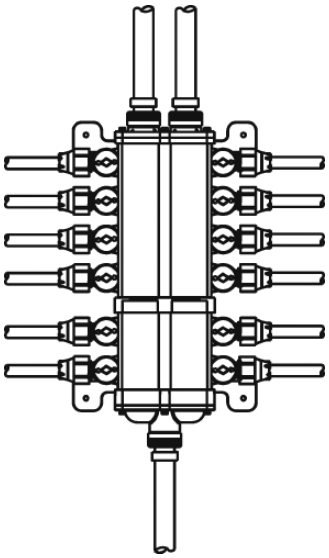

3.3 Valve Requirements for Parallel Systems

The IPC and UPC codes address valves in sections 604.10.3 Valves, and 605.5 respectively, which allow the use of manifold valves in parallel systems in lieu of valves at the fixture, as long as they are installed at the manifold and are identified with the fixture being supplied.

4. THE MANABLOC

4.1 The MANABLOC

The MANABLOC control unit is tested to the requirements of ASTM F877 and certified by NSF International. The MANABLOC supply inlet connections utilize a special 1" MANABLOC gasketed swivel connection that requires MANABLOC transition fittings (not included in the MANABLOC package, must be purchased separately). Transition fittings available include NPT male thread, brass insert (PEX crimp), bronze insert (PEX press), and compression.

Connections for the individual PEX distribution lines are a mechanical-type fitting and will not work with standard pipe fittings. Use only fittings supplied with the MANABLOC or other fittings designed for special port transitions available from Viega, listed in the Pure*Flow* Plumbing System Catalog. Warranty coverage applies ONLY when the MANABLOC is installed with ViegaPEX tubing and in accordance with the Installation Instructions, local code and good plumbing practices.

⚠ Protect the MANABLOC from construction debris, direct exposure to sunlight and inadvertent chemical exposure by storing it in its original shipping carton until installation.

MANABLOC port connections are available in Bronze Press, Brass Crimp, Poly Crimp, and Compression available in all 3/8", 1/2" or a combination of both for all connection types as well as a model for hard and soft water systems.

4.2 Pure*Flow* PEX Tubing

Components utilized in the MANABLOC plumbing system consist of ViegaPEX, ViegaPEX Ultra, and FostaPEX cross-linked polyethylene tubing, fixture transition fittings, water service swivel connections, compression port connections and the MANABLOC control unit. The MANABLOC and ViegaPEX tubing are manufactured to national and international standards and are listed by recognized third-party agencies.

ViegaPEX cross-linked polyethylene tubing is produced to ASTM F876/F877 and is tested and listed by recognized agencies (such as NSF International) to the requirements of these standards. ViegaPEX tubing has a design pressure rating of 100 psi @ 180°F, and 160 psi @ 73°F.

These are maximum-use ratings. ViegaPEX tubing and the resin used in the manufacture of ViegaPEX tubing have been tested and listed by NSF to meet the requirements of ANSI/NSF 14/61, and NSF Protocol P171 CL-R/CL-TD, Chlorine Resistance of Plastic Piping Materials.

4.3 Supply And Distribution Line Sizing

The general sizing information shown may be appropriate for many MANABLOC installations. These recommendations are based on flow rates of typical fixtures that require 8 psi residual pressure.

For more complete and definitive sizing information for distribution line length limitations, request the MANABLOC Tube Size Guide from your local supplier or from Viega.

Typical supply line size:

3/4" up to 2-1/2 baths
1" up to 4-1/2 baths

Typical distribution line size:

3/8" up to 2-1/2 GPM fixture flow requirement (lavs, toilets, bidets, bar sinks, kitchen sinks, dishwashers, some showers (no tub fill)* and some washing machines)**

1/2 up to 4 GPM fixture flow requirement (hose bibbs, tubs, showers, washing machines, whirlpool baths, soaking tubs, etc.)

* Due to the many types of shower valves, it is recommended that you consult the valve manufacturer's literature to determine the actual flow rate and required residual pressure demands of the fixture. Use the MANABLOC Tube Size Guide to determine distribution line size and length limitations.

**Some washing machines use a timer instead of a water-level sensor to determine when the machine has been filled with the proper amount of water.

There are cases in which low supply pressure or excessive distribution line length may cause some machines to fill to a level less than designed. Consult the washing machine manufacturer's literature to determine the actual fill rate and residual pressure requirements for distribution line size.

Hose Bibb Note: If the hose bibbs are primarily for irrigation purposes, they should be supplied from the main service line prior to the MANABLOC.

The service line needs to be sized appropriately for the additional water demand. A typical residential plumbing system can not be plumbed with all 3/8" distribution lines. It is the decision of the user to choose a combination of both 3/8" and 1/2" lines or to upsize the entire system to 1/2".

However, supplying fixtures with 1/2" lines when it is unnecessary for the fixture demand, will increase the wait time for hot water delivery to those fixtures. The best water and energy savings of a MANABLOC system are realized when distribution lines are

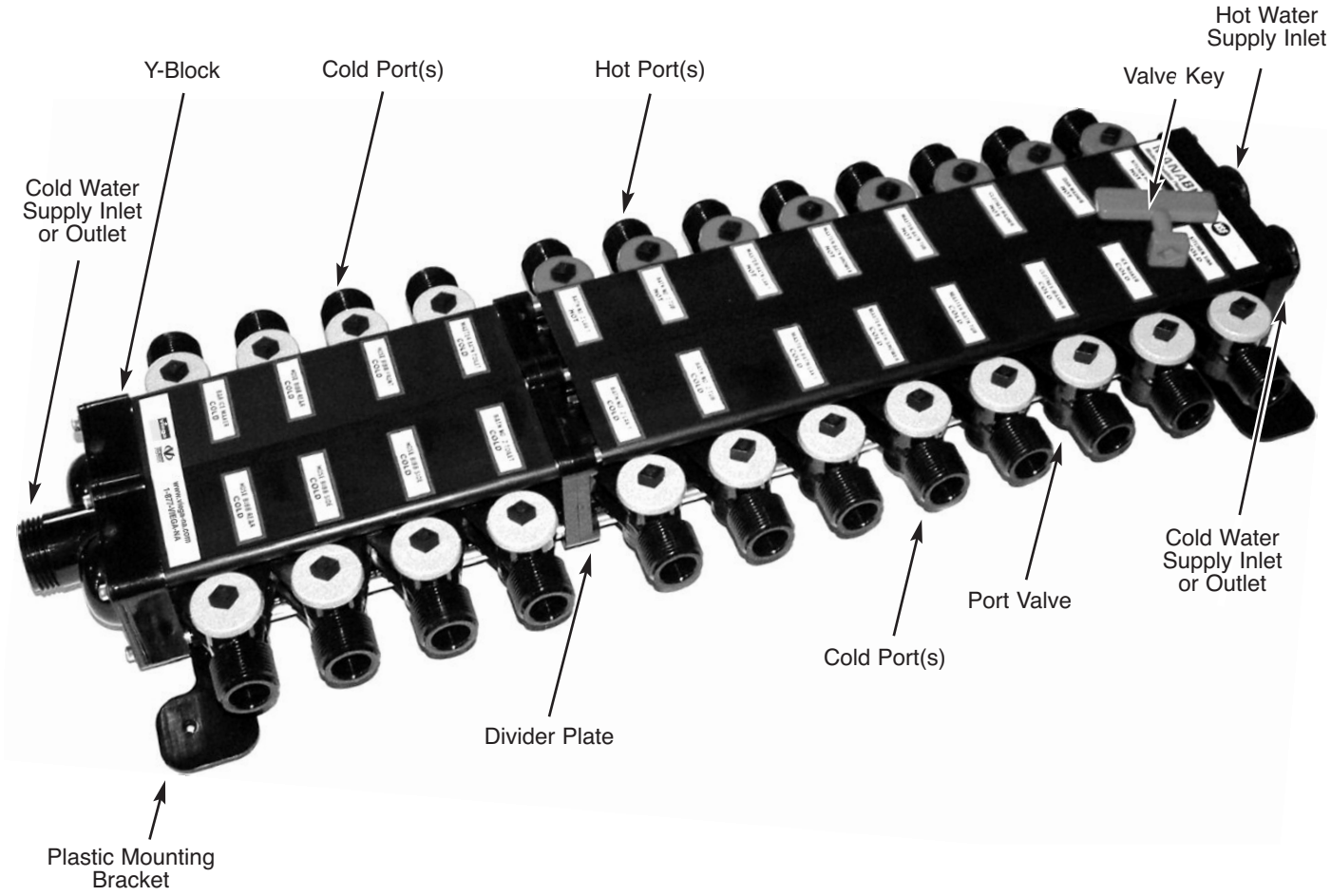

sized according to the fixture demand and the length of the individual line (see the MANABLOC Tube Size Guide for details on sizing a typical system).

A MANABLOC with all of the same size ports, can easily have some ports converted to 1/2" with optional PEX Crimp adapter MXLSA33 (3/8" port to 1/2" tube).

Conversely, 1/2" ports can be converted to 3/8" with optional PEX Crimp adapter MXLDC24, or PEX Press adapter MXPDC24 (1/2" port to 3/8" tube).

Note: Each port converted to a larger or smaller size requires one adapter and one PEX Crimp ring or PEX Press sleeve (sold separately).

4.4 Overview And Carton Contents

Additional package contents include:
- Valve T-Handle
- Instruction/Warranty Packet - to be left at installation site
- Port Labels

4.5 Location

Before installing the MANABLOC, review the following instructions.

NOTE: The MANABLOC is much like an electrical breaker box. When a fixture needs repair, the line to that fixture may be shut off at the MANABLOC, eliminating the need to shut down the water supply for the entire house.

This feature requires that the MANABLOC be accessible after installation.

1. Under no circumstances shall the MANABLOC be located in a permanently covered area (behind sheetrock, plywood, paneling), where freezing temperatures may occur, or in direct sunlight. THE MANABLOC MUST BE ACCESSIBLE and there shall be sufficient clear area in front of the MANABLOC to provide access.

2. When local code allows, the MANABLOC unit can be mounted in a fire rated wall provided the access door meets the same rating requirements as the wall and is installed over the access opening.

3. When installing the MANABLOC in a location other than between studs, provisions must be made to support the tubing runs as they exit the MANABLOC. (See section 5).

4. Any installed cover panel shall allow access to the MANABLOC and its mounting screws, the port valves, distribution line connections and supply line connections.

5. To maximize potential water and energy savings, the MANABLOC should be mounted as close as is practical to the hot water source, taking into consideration the following:

   a. When the MANABLOC is mounted above the water heater, there shall be a minimum of 36" of connecting tubing between the water heater and the MANABLOC to reduce the chance of heat stacking;

   b. When the MANABLOC is mounted beside the water heater and is connected with tubing incorporating a horizontal flow, it shall be connected with at least 18" of tube length. Mounting the MANABLOC within 8 (eight) feet of developed tube length of the water heater will minimize delivery time of hot water to individual fixtures.

   c. The unit should be installed in an area which is centrally located to the most dense concentration of served fixtures. Some applications will require that the MANABLOC be mounted further than eight (8) feet from the hot water source. See page 5 for suggestions to reduce hot water delivery time in these instances.

6. DO NOT install the MANABLOC within a continuously recirculating hot water plumbing loop. The MANABLOC, however, may be supplied from a recirculating hot water loop. (See figure below.)

7. Position the MANABLOC so that it can be securely fastened through the holes provided in the mounting brackets. The mounting surface should be as flat as possible so as not to induce any twisting or bending forces on the unit. The MBB2 Mounting Straps simplify mounting between studs on 16" centers.

4.6 Valve Operation

A MANABLOC system, which has valves on all of the outlet ports, does not require stop valves at the fixtures. However, the Authority Having Jurisdiction (AHJ) may require stop valves at some fixtures.

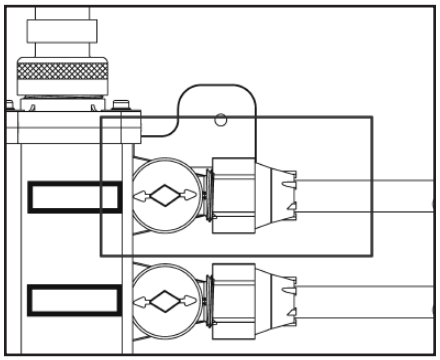

Continuously Recirculating Hot Water Plumbing Loops

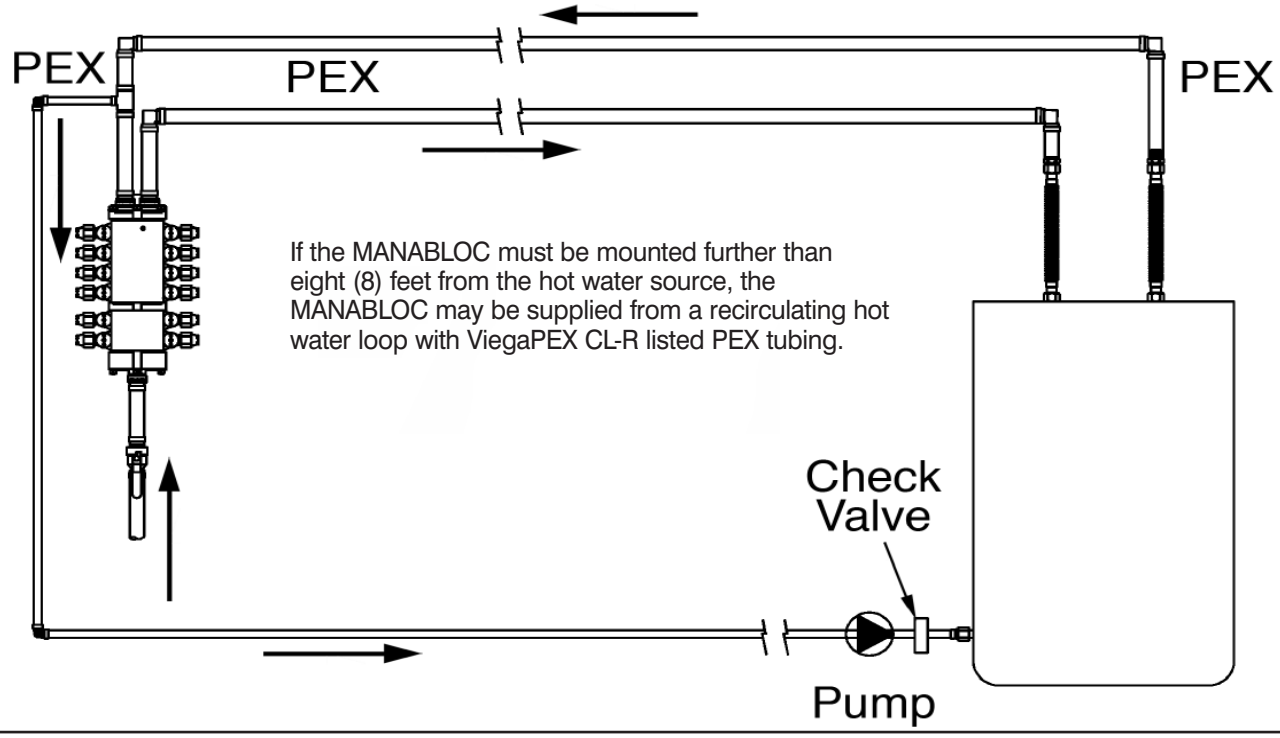

Note: these valves are field-repairable. Contact Viega Customer Service for more information on this procedure.

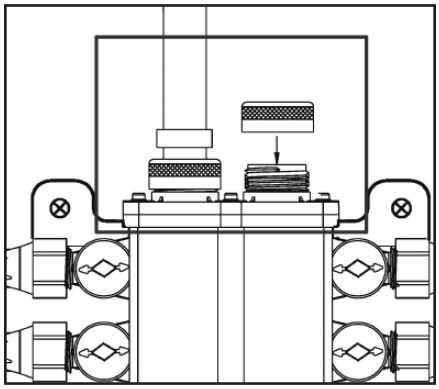

If a main inlet/outlet will not be used, it must be capped (use Part No. ECAP1).

The main service line to the MANABLOC may include a main shut-off valve, as required by local code. Although a shutoff valve for the main service line at the MANABLOC itself is not required, it can be a beneficial option for a homeowner and is recommended.

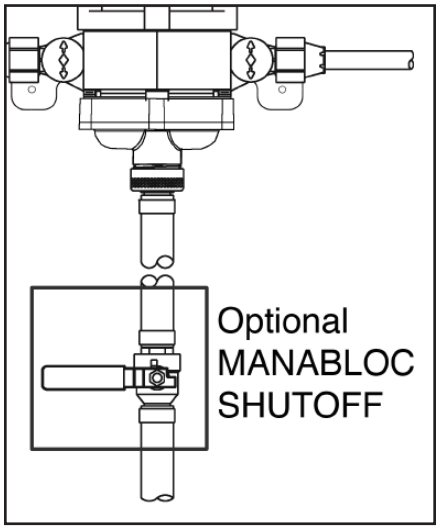

Local code may also require the installation of a check valve, PRV (pressure reducing valve), back flow preventer, etc. To prevent debris and other particles from entering the system, a strainer may be installed in the service line.

4.7 Domestic Hot Water Circulation Systems

ViegaPEX and the MANABLOC can be used in continuously recirculating domestic hot water plumbing loops, provided:

1. The plumbing loops shall operate with water temperatures of 140°F or lower, as required by most model plumbing codes.

2. The recirculating loop is for supplying hot water more quickly to the MANABLOC, not to circulate through it or the distribution lines. DO NOT include the MANABLOC within a continuously recirculating loop.

NOTE: The distribution lines and the MANABLOC are not to be part of the circulating system. The loop is to provide hot water more quickly to the MANABLOC only.

4.8 Multiple MANABLOC Installations

If a home requires multiple MANABLOCs to service the number of fixtures in the home, these guidelines should be followed if the MANABLOCs are closely located to each other.

- Consider dividing high demand fixtures between the units.

- Consider a reasonable division, i.e. upstairs/downstairs, east/west or front/back.

Locating a Remote MANABLOC

A remote MANABLOC is sometimes recommended to achieve maximum efficiency from your MANABLOC system.

- It can be advantageous when the line lengths are excessive from one centralized MANABLOC unit.

- When the home requires more than one unit due to the number of fixtures or size of the home, you may want to consider locating a remote unit near an outlying group of fixtures.

4.9 ViegaPEX General Design/Installation Practices

This section only addresses general design/installation practices for ViegaPEX tubing, refer to the Pure*Flow*® Water Systems Installation Manual for more detailed instructions.

Insulating each PEX tube individually or as a group is not generally necessary if the PEX tubing is installed within the insulation envelope of the structure, i.e. the heated area. For example, the tubing may be installed under the insulation in the attic or within an interior wall of a heated space.

Use metallic connectors to attach PEX to gas water heaters (Viega Part No. XLSE4418, XLMSE4418 or similar fabricated metallic assembly).

Install a minimum 18" of metallic or other piping between the water heater and PEX. For electric water heaters, it is permissible to connect directly to the inlets and outlets with a brass swivel elbow or straight brass swivel fitting.

Protect the PEX tubing with non-metallic sleeving material where it enters and/or exits a slab or at mass penetrations. PEX need not be sleeved its entire length within the slab. However, full-length sleeving is allowed. Penetrations through concrete walls may be sleeved with a larger size metal or plastic tube. Protect the tubing from any sharp edges where it enters and exits larger sleeving material.

These are general guidelines to consider when installing ViegaPEX tubing with a MANABLOC system, please refer to the Pure*Flow* installation guide for more detail on PEX tubing installations.

COLD WEATHER CAUTION! The thermoplastic components of the MANABLOC, like all thermoplastics, have decreased resistance to impact under freezing conditions and could be damaged. Increased care must be exercised when installation is to occur under freezing conditions.

BEFORE INSTALLING THE MANABLOC, MAKE SURE THE LOCATION REQUIREMENTS HAVE BEEN MET.

Extra caution should be taken in handling the MANABLOC when temperatures are below freezing. Tubing penetrations may require sleeving or the installation of an insulator.

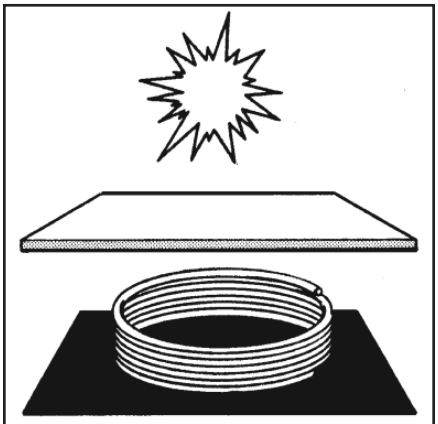

PEX tubing should always be shielded from direct or indirect sunlight.

PEX tubing shall be stored under cover, shielded from direct and indirect sunlight when the material is stored for any length of time. Short exposure times, of ViegaPEX, FostaPEX and PolyAlloy fittings, not exceeding the total accumulated recommended exposure time are permissible. See the Pure*Flow*® Water Systems Installation Manual for more information.

When the tubing penetrates at an angle in relation to the hole, it may be subject to a sharp edge, which could damage the pipe. Acceptable sleeving materials include flexible plastic tubing, foam pipe insulation or an approved plastic insulator.

It is not generally necessary to sleeve PEX when penetrating wooden framing members or non-metallic finished or unfinished walls. However, if there is a doubt, sleeve the pipe or install an insulator.

Sleeve all penetrations of metal, metal studs, and masonry or concrete.

When penetrations must be sealed for air infiltration purposes, there are several options available. A good grade of silicone, acrylic, or siliconized acrylic caulking (DO NOT use oil-base caulks), most of the canned expanding foams, and open- or closed-cell pipe insulation are good sealing materials and may be used in direct contact with PEX tubing. Other materials may be used provided they do not cause short or long term damage to the PEX tubing.

If there is no information available on the compatibility of the proposed sealing material, wrap the tubing with several layers of aluminum foil in the area of contact and extending a few inches on both sides before applying any sealing material.

Most building codes require the use of a fire-stopping compound when tubing penetrates a fire-rated wall. There are a number of fire stopping compounds readily available that have been listed for use with PEX tubing. These compounds come in standard caulking tubes and are identified as waterbased, acrylic or latex. Consult the compound manufacturers' instructions for proper application.

DO NOT APPLY CHEMICALS TO THIS MANABLOC PLUMBING SYSTEM

5.1 MOUNTING THE MANABLOC

5.1 Mounting The MANABLOC Between Studs

NOTICE! Please leave this installation guide for the homeowners reference. Local code may also require additional labeling directly adjacent to the MANABLOC or on the inside of any cover panel.

Dimensions in these instructions are for 16" stud centers, and must be adjusted for other stud spacing.

Once the general location of the MANABLOC has been determined (see page 11 for guidelines), the MANABLOC may be mounted to a suitable surface between a pair of adjacent studs. For 16" stud spacing, the MBB2 Mounting Straps can simplify installation.

Tools Required
- Electric Drill
- Pencil or Pen
- Framing Square
- Tape Measure
- 3/4" and 1-1/4" Wood Drill Bits
- #2 Phillips Head Screwdriver
- Permanent Marking Pen*
- Tubing Cutter - Stock Code 21304 or HAK67
- PEX Press/Crimp Tool(s)*
- MANABLOC Wrench - Part No. MW1 (Compression Blocs only)

Additional Materials
- Wood or Drywall Screws - 1/2" or longer
- 1/2" or 3/4" Plywood - only required when not mounting between studs
- Nylon Ties - Part No. HB14120
- PEX Distribution Line Tubing
- 3/4" or 1" Supply Line Tubing
- MANABLOC 1" Swivel Supply Fittings
- Fixture Transition Fittings
- Tubing Clamps and Hangers
- MANAPANEL Access Panel*
- Tubing Uncoiler*
- Tube Turnouts (recommended)

* Optional or may not be required for some installations

1. Lay the MANABLOC, plastic brackets down, on a suitable flat surface that is large enough to accommodate the full-length of the MANABLOC. Place a MBB2 Mounting Strap under each plastic mounting bracket (located at the top and bottom ends of the MANABLOC). Attach the plastic mounting bracket at one end of the MANABLOC to the center two holes of a Mounting Strap using the provided self-tapping pan-head screws. The screw heads must be on the accessible side of the mounting strap. Repeat at the other end of the MANABLOC. Tighten screws securely.
2. Standing behind the studwall, measure up from the floor and make a mark on the back of one of the studs to represent the top of the MANABLOC as shown in the illustration.

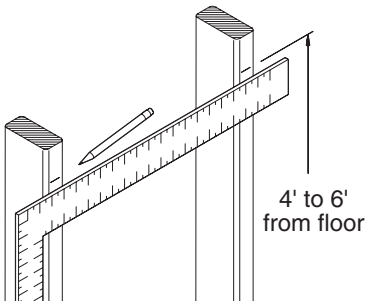

Measure up from the floor while standing behind the studwall. Mark a location for the top of the MANABLOC.

This mark should be between 4 feet and 6 feet from the floor but may be at any height, provided the height will allow all valves on the MANABLOC to be accessible. With a framing square or level, transfer and mark the noted height on the other stud.

NOTE: A residence intended for disabled persons may require that the MANABLOC be mounted lower in the wall to provide access.

3. Standing behind the stud wall, hold the MANABLOC facing away from you and align the top of the UPPER MBB2 Mounting Strap to the line on the stud that you made in Step 2. Loosely attach this Mounting Strap flush to the back outer edge of one stud using a 3/4" or longer drywall or other suitable wood screw (A). See illustration.

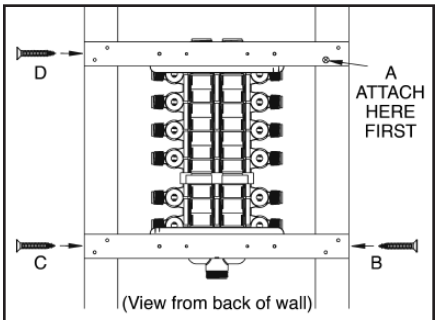

4. Line up the LOWER Mounting Strap with the back outer edge of the stud and attach it in the same manner (B). Attach the remaining strap ends (C & D) to the other stud, and tighten all screws.
5. Standing in front of the wall, use a framing square or straight edge and mark the center line position of the top and bottom ports onto both studs (see illustration).

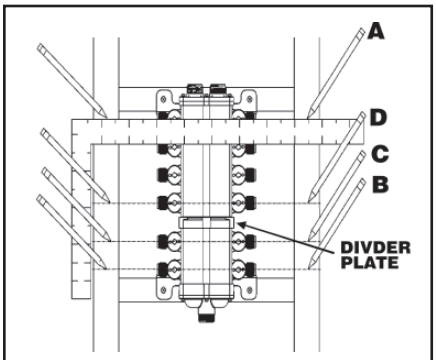

Mark the centers of the top and bottom MANABLOC ports (A, B) and the ports directly above and below any divider plate (C, D)

When the MANABLOC includes a divider plate, also mark the location of the ports directly above and below the divider plate onto both studs.

6. Detach the MANABLOC from its Mounting Straps (or 1 x 4s) and remove it from the installation area to prevent wood chips or other debris from falling into the unit.

7. Transfer the port location marks made in step 5 to the insides of the stud cavity using a square and pencil.

8. Measure 1-5/8" from the mounting surface. Draw a vertical line on the studs that passes through each of the horizontal port center lines marked in step 7 (see illustration). Be sure to mark the inside of both studs.

9. Push a small nail through the printed center line at one end of the Drill Guide (A). Push the nail into the cross formed where the top port mark intersects with the 1-5/8" mark. Tap the nail into the stud to hold the Drill Guide in place.

10. Push a small nail through the printed center line on the Drill Guide with the center line of the ports above the divider plate (B). Tap the nail into the stud to hold the Drill Guide in place.

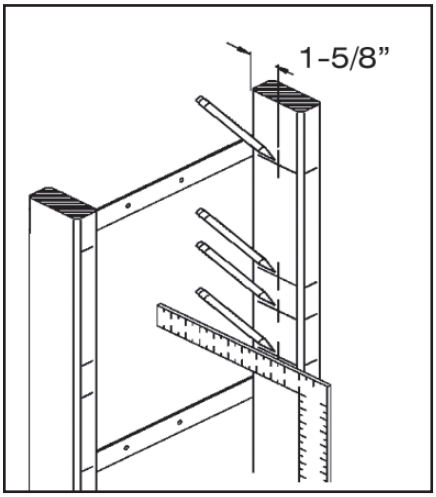

If the MANABLOC does not have a divider plate, push the nail into the printed center line of the bottom most port (E) and on into the corresponding mark on the stud. Tap the nail into the stud to hold the drill guide in place.

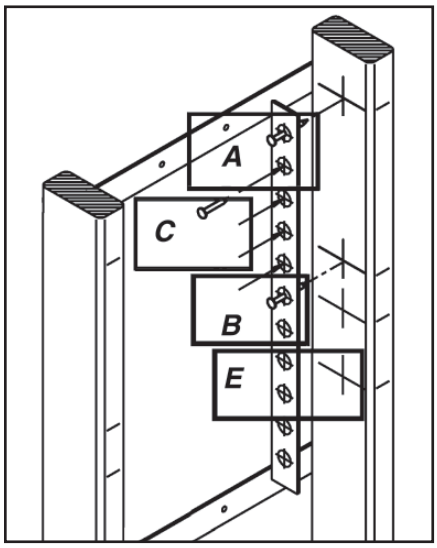

11. Using an awl, nail, or other pointed tool (C) mark the stud by tapping through the Drill Guide at each printed center line between the two nails. Carefully remove the Drill Guide. If the MANABLOC does not have a divider plate, go to step 13.

12. Marking port locations below a divider plate: Put the top nail in the Drill Guide (D) on the cross formed by the center line of the first port below the divider plate and the 1-5/8" measurement from the back of the stud. Tap the nail into the stud to hold the drill guide in place. Push another nail (E) through th center line on the Drill Guide which corresponds to the bottom port of the MANABLOC.

    Then place the nail at the point on the stud where the bottom port center line intersects with the 1-5/8" measurement. Tap the nail into the stud to hold the drill guide in place. With a nail or awl (F), tap and mark the stud at each center line between the two nails.

13. Carefully remove the Drill Guide and repeat the marking procedure on the adjacent stud.

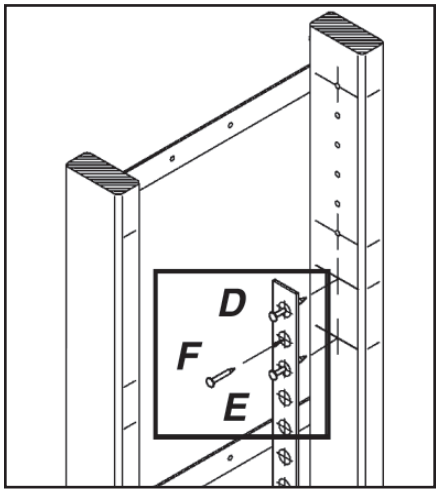

14. Drill 3/4" holes through both studs at each marked location. Be sure to hold the drill level and perpendicular to the stud to prevent drilling holes at an angle. Remove any splinters or burrs made during drilling.

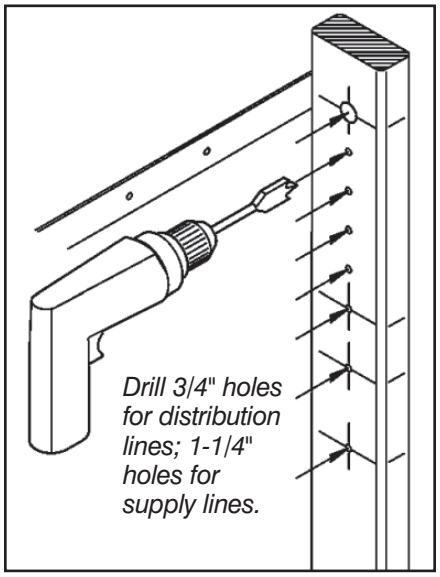

15. Mark and drill any holes for main water supply and hot water supply/return lines at this time. An 1-1/4" bit will provide adequate clearance for 3/4" or 1" tubing. The tubing shall enter and/or exit the MANABLOC in a straight line

so as not to induce bending stress on the MANABLOC. Necessary elbows, couplings, and tees are allowed in the main water supply lines.

16. Reattach the MANABLOC to the mounting straps.

When the MANABLOC is installed prior to wall finishing operations, the unit MUST be protected from paint, texture compounds and drywall dust.

NOTE: The wall in which the MANABLOC is to be mounted must be accessible from both sides during installation to use the MBB2 Mounting Straps.

5.2 Mounting The MANABLOC Without Use Of MBB2 Straps

If not using the MBB2 Mounting Straps, this procedure applies:

1. Cut two pieces of lumber (1 x 4 - or 3/4" plywood - about 3-1/2" wide) to a length which provides a snug fit BETWEEN two studs.

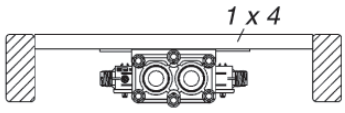

(TOP VIEW)

1 x 4s attach at the back, inside the studs, and the MANABLOC is centered between the studs.

2. The top of the MANABLOC should be between 4 ft. and 6 ft. from the floor (but may be at any height provided that it maintains accessibility to all of the ports on the MANABLOC).

   Make a mark near the back of the inside of one stud which would represent the top of the MANABLOC.

   With a framing square or level, transfer the mark to the inside back of the other stud.

3. ATTACHING THE MANABLOC BETWEEN THE STUDS:

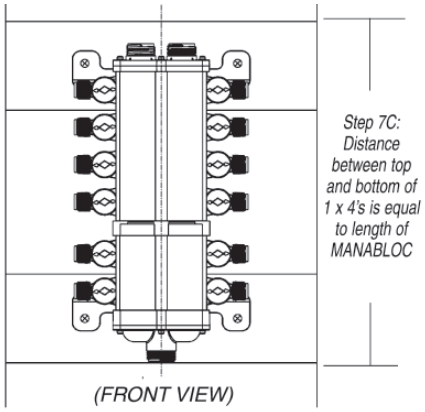

(FRONT VIEW)

A. Measure the total length of the MANABLOC.

B. Attach the first (UPPER) 1 x 4 inside and flush to the back of the studs (see TOP VIEW) at a height where the center of its width is centered on the marks from step 2.

C. Attach the remaining (LOWER) 1 x 4 inside and flush to the back of the studs at a distance below the upper 1 x 4 that is equal to the length of the MANABLOC (step 7A) when measured from the top of the upper 1 x 4 to the bottom of the lower 1 x 4. See FRONT VIEW illustration.

4. CENTER THE MANABLOC IN THE STUD CAVITY: Attach the MANABLOC to the 1 x 4s with four 1/2" - 3/4" drywall.

5. Refer back to section 5, step 5.1 to finish installation.

5.3 Surface Mounting The MANABLOC

1. A suitable base for the MANABLOC can be constructed from a section of 1/2" or thicker plywood that is a minimum 22-1/2" wide and slightly longer than the overall length of the MANABLOC.

2. Securely attach a length of 2 x 4, or other suitable framing material with a thickness of 1-1/2" and about 3-1/2" wide on the left and right sides of the mounting base and running the full-length of the MANABLOC (see illustration, step 4.5). The 2 x 4s will be used to secure the distribution lines at the correct height as they exit the MANABLOC.

3. Attach the mounting base to the structure in a suitable location (see page 4). The base should be mounted so the top of the MANABLOC is between 4 feet and 6 feet from the floor but may be at any height provided that the height maintains accessibility to all the ports on the MANABLOC.

4. The mounting base must be firmly attached to a structure solid enough to support, at a minimum, the weight of the MANABLOC filled with water. The base should be square and level.

5. Center the MANABLOC on the base both vertically and horizontally as shown here. Attach the MANABLOC to the mounting base with four 1/2" or longer drywall or wood screws through the holes in the plastic brackets on the MANABLOC.

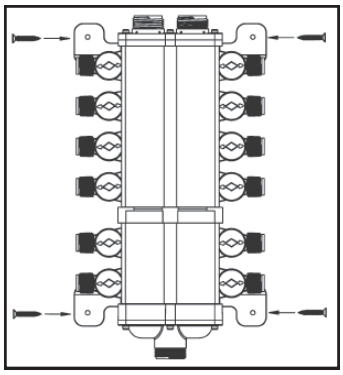

6. As the distribution lines are connected to the MANABLOC (see section 6), ensure that the tubing exits the unit at a 90 degree angle to the centerline of the MANABLOC so as not to induce bending stress on the MANABLOC.

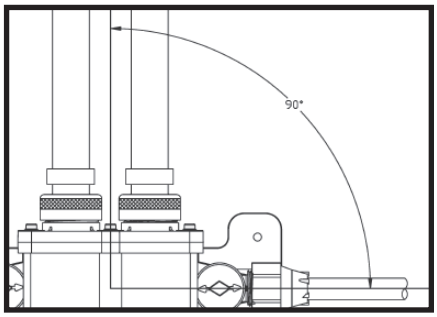

7. When attaching the distribution line tubing to the 2 x 4 supports, be sure to use appropriately-sized Viega tubing clamps (For example, use stock code 52 000 for 3/8" tubing and stock code 52 020 for 1/2" tubing).

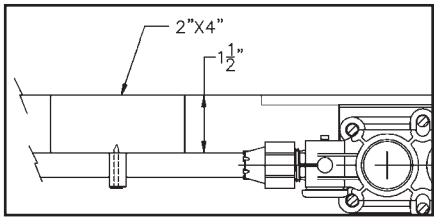

Use one clamp per tube to ensure that the tubing is held securely. Clamps shall be positioned NO FURTHER than six (6) inches from the end of the port. DO NOT pull tubing tight. Leave at least 7" of slack per 50' of tubing run.

6. INSTALLING DISTRIBUTION LINES

6.1 Installing Distribution Lines

Distribution lines should be run continuously in the most direct route from the MANABLOC to the fixtures.

A distribution line may contain a coupling or other fitting for purposes such as repairing a damaged section of tubing, handling a change of direction which cannot be made within the minimum bend radius guidelines, accommodating a fixture location change which requires a longer line, or to supply a low-demand accessory (i.e., ice maker). However, several pieces of shorter tubing should not be connected with fittings for the purpose of using up leftover lengths of tubing.

NOTE: It is the responsibility of the installer to ensure that further construction, finishing and other mechanical system installations do not compromise the MANABLOC plumbing system as installed according to these instructions.

1. The tubing coils are usually placed at the MANABLOC location and tubing is pulled to the fixture through stud cavities, holes drilled overhead in floor joists, etc. Several tubes may be pulled at one time. Viega's color coded ViegaPEX tubing will help prevent cross-connections.

2. Tubing should not be pulled tightly and some slack (typically, 7" per 50') is necessary to accommodate expansion and contraction. Leave enough excess tubing at the beginning and end of runs to make connections without putting strain on the tubing.

3. Care should be exercised when pulling PEX tubing to prevent cutting or abrading. Care also must be taken to prevent kinking of the coiled tubing. If kinking or cutting should occur, these sections must be cut out and a coupling installed.

4. For the best results, connect the distribution lines to fixtures and the MANABLOC immediately upon installation, and label the end-use fixture on the MANABLOC cover plate next to the port.

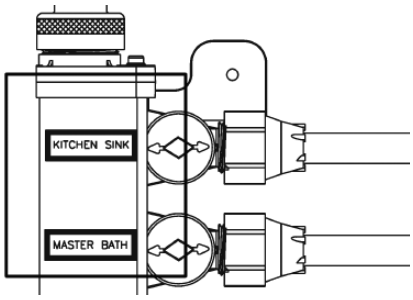

Self-adhesive labels are supplied with the MANABLOC. Tubes pulled as a bundle, or those not connected immediately, should be marked at both ends with a permanent marker designating the fixture supplied.

5. Since plumbing fixtures are generally located in groups, and there may be several ViegaPEX distribution lines running to approximately the same location, it is easiest to run these distribution lines bundled together.

   Hot and cold lines may be run in the same bundle. For a neat appearance, bundles can be tied with nylon ties (Stock Code HB14120 or HBPT) or plastic strapping at regular intervals.

NOTE: Bundles shall be sufficiently tied for tubing support but shall NOT restrict tubing expansion and contraction caused by temperature variations.

CAUTION: DO NOT USE DUCT TAPE FOR BUNDLING. Duct tape will not permit tubing movement.

6. Bundles may be supported with hangers designed for larger tubing sizes.

7. The HB14120 or HBPT can be used to support PEX lines directly from wooden framing members.

   Other plastic cable ties capable of supporting the weight of the tube or bundle when filled with water can also be used.

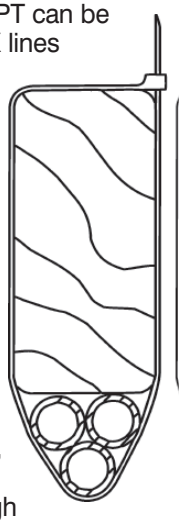

8. Holes drilled through studs, joists, plates, headers, etc. must be large enough to accommodate tubing bundles without binding, to allow free movement. Several smaller holes (accommodating a few lines each) may be preferable to drilling a bundle-size hole. In no case should the hole size exceed building code guidelines, as this could weaken the structural support members.

For more detailed instructions, refer to Pure*Flow* Installation Guide, section 7.

6.2 Connecting Distribution Lines to the MANABLOC

PEX Press, PEX Crimp, and Compression connections are available and included with the MANABLOC, except Supply connections which must be ordered separately.

UNDER NO CIRCUMSTANCES shall any form of thread sealant (Teflon® paste, pipe dope) be used on the distribution line connections. The carriers present in these compounds can crack the plastic port connections, resulting in leaks and water damage.

6.2.1 Compression Connections (3/8" & 1/2" ports)

THE WATER SUPPLY TO THE MANABLOC SHALL BE TURNED OFF WHILE MAKING DISTRIBUTION LINE CONNECTIONS.

NOTE: The red caps on the MANABLOC designate hot ports, the blue caps designate cold ports. Make sure the distribution lines are being connected to the correct ports (hot or cold). The use of color coded ViegaPEX tubing also reduces the possibility of cross connections.

1. For each distribution line, slide the Lock-In compression nut (A), Lock-In insert (B) and the plastic ferrule (C) onto the tubing in that order. See illustration below.

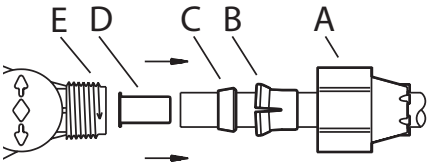

The long taper of a 3/8" ferrule (C) must be TOWARD THE END OF THE TUBE; a 1/2" ferrule is symmetrical and may be installed facing either direction. Insert the stainless steel stiffener (D) COMPLETELY into the end of the tubing.

WARNING: DO NOT attempt to install the Lock-In insert backwards as breakage may result. ALWAYS insert the long portion of the insert sleeve over the tube first.

DO NOT attempt to use or reuse inserts that are defective, cracked, broken or otherwise damaged, as connection failure will result.

2. Push the tubing into the port socket (E) until it bottoms out.

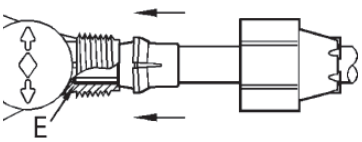

Holding the tube so that it does not back out of the fitting, slide the white Lock-In insert and ferrule snugly against the chamfer inside the port socket.

While holding the tube against the bottom of the socket, thread the Lock-In compression nut onto the port and tighten hand-tight.

3. While holding the tube securely to prevent turning, finish tightening the nut with the MANABLOC Wrench (Viega Part No. MW1) until the white Lock-In insert appears between the lugs and becomes flush with the ends of the lugs, plus 1/4 to 1/2 turn.

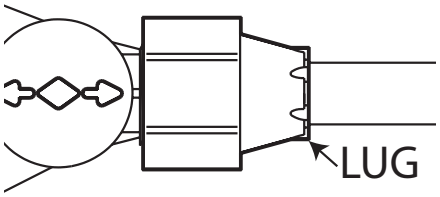

Complete the connection as soon as each distribution line is connected to the MANABLOC.

WARNING: DO NOT use slip-joint pliers to tighten the Lock-In nuts. Use the MW1 MANABLOC Wrench to tighten the compression connections.

Each valve should be turned to the open position after completing each connection.

4. After all connections are complete, recheck that all of the Lock-In inserts are visible between the lugs and are flush or protruding slightly beyond the lugs.

5. As the distribution lines are connected to the MANABLOC, they should immediately be labeled on the cover plate as to which fixture that line supplies.

Fixture labels are included with each MANABLOC. Affix the appropriate label to the cover plate next to the port.

COMPRESSION CONNECTION CAUTION
This plumbing system relies upon the proper tightening of distribution line compression connections.

Failure to properly complete ALL connections will result in failure. Incomplete or improper connections can hold pressure during a system test but will fail at a later date, resulting in water damage.

DO NOT OVERTIGHTEN. Compression fittings can be OVER TIGHTENED.

Overtightening of the Lock-In compression nuts may cause damage to the tubing, nut, valve or fitting body. DO NOT tighten Lock-In nuts beyond the recommendation of these instructions (Step 3).

6.2.2 PEX Press Connections (1/2" ports)

THE WATER SUPPLY TO THE MANABLOC AND THE PORT VALVES SHALL BE TURNED OFF BEFORE ATTEMPTING INSTALLATION OF PRESS ADAPTERS.

CAUTION
Use only sealing elements supplied with the adapters.

1. Slide the supplied swivel nut (D) and a press sleeve (C) 61000 for 3/8" tubing; 61020 for 1/2" onto the tubing (threads of the nut toward the end of the tubing).

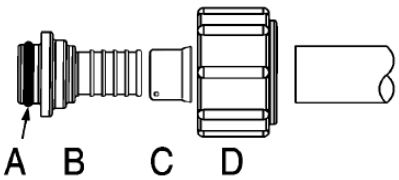

Insert the barbed end of the fitting (B) fully into the end of the tubing as shown.

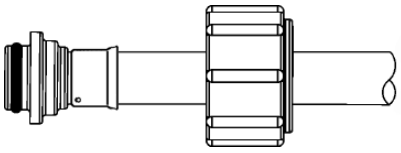

2. Check full tubing insertion at view hole of sleeve, then press the sleeve with an appropriately sized press tool. See section 5 from the Pure*Flow* installation manual for pressing instructions.

   DO NOT PRESS TWICE.

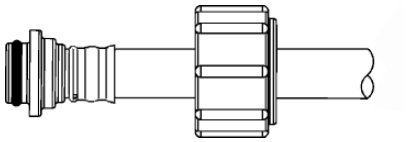

3. Insuring sealing element (A) is in place, insert the fitting into the desired port until the fitting flange sets flush with the end of the port.

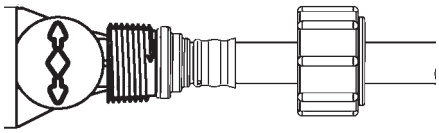

4. Slide the swivel nut (D) over the press sleeve (C) and thread the nut onto the MANABLOC port, hand tighten only.

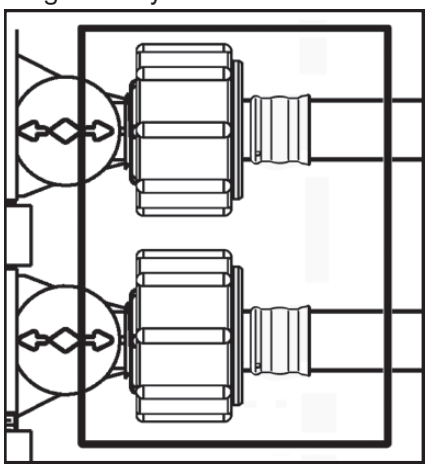

5. Open the port valve(s) before turning on the main water supply.

6.2.3 PEX Crimp Connections (1/2" ports)

THE WATER SUPPLY TO THE MANABLOC AND THE PORT VALVES SHALL BE TURNED OFF BEFORE ATTEMPTING INSTALLATION OF CRIMP ADAPTERS.

CAUTION
Use only sealing elements supplied with the adapters.

1. Slide the supplied swivel nut (D) and a crimp ring (C) XLCR2 for 3/8" tubing; XLCR3 for 1/2" onto the tubing (threads of the nut toward the end of the tubing).

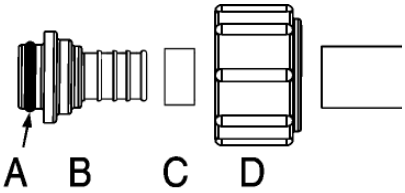

Insert the barbed end of the fitting (B) fully into the end of the tubing as shown.

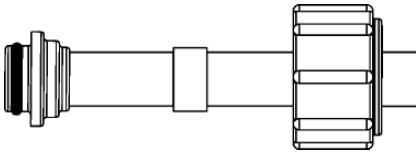

2. Insuring sealing element (A) is in place, insert the fitting into the desired port until the fitting flange sets flush with the end of the port.

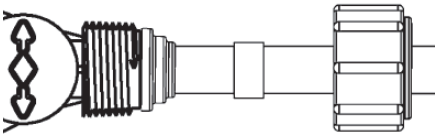

3. Slide the crimp ring (C) to within 1/8" to 1/4" from the end of tube. Crimp the ring with an appropriately sized full-circle crimp tool.

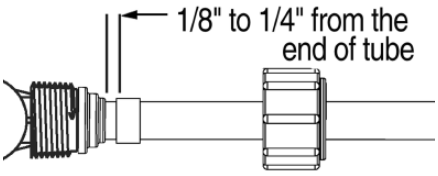

See section 6 from the Pure*Flow* installation manual for crimping instructions.

DO NOT CRIMP TWICE.

4. Slide the swivel nut (D) over the crimped ring (C) and thread the nut onto the MANABLOC port, hand tighten only.

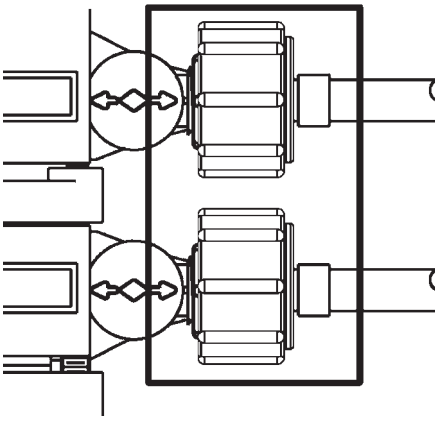

5. Open the port valve(s) before turning on the main water supply.

6.2.4 Crimp Connection (3/8" ports)

THE WATER SUPPLY TO THE MANABLOC AND THE PORT VALVES SHALL BE TURNED OFF BEFORE ATTEMPTING INSTALLATION OF CRIMP ADAPTERS.

This connection is for when you need to convert a 3/8" compression port to 1/2" PEX using a crimp connection.

CAUTION
Use only sealing elements supplied with the adapters.

1. Wet the sealing element (A) with tap water or silicone lubricant only. DO NOT USE Vaseline®, grease, oil, or any other lubricant. Use of petroleum-based lubricant can cause cracking of the plastic and result in a leak. Place the sealing element against the flange of the brass adapter (B) the end of the tubing.

Place the wet sealing element (A)...

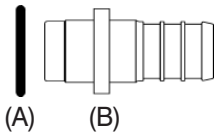

...against the brass adapter flange (B).

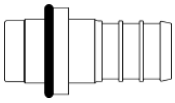

2. Slide a crimp ring (C) - XLCR2 for 3/8" tubing; XLCR3 for 1/2" - and the supplied swivel nut (D) onto the tubing (threads of the nut toward the end of the tubing).

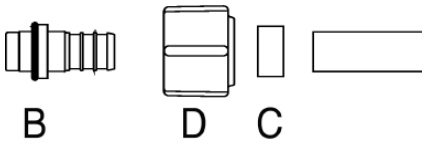

Insert the brass adapter (B) fully into the end of the tubing as shown.

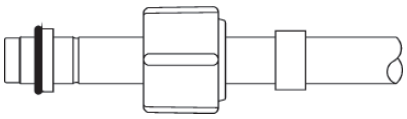

3. Slide the swivel nut (D) back to brass adapter and slide the crimp ring (C) to within 1/8" to 1/4" from the end of tube. Crimp the ring with an appropriately sized full-circle crimp tool.

   DO NOT CRIMP TWICE.

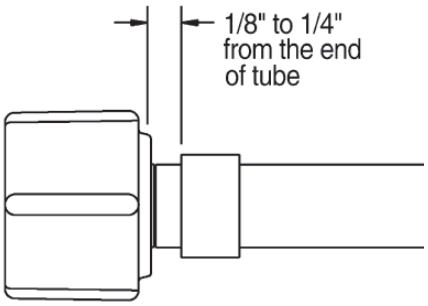

4. With the sealing element still in place, thread the nut onto the MANABLOC port and tighten hand tight plus NO MORE THAN 1/8 turn additional.

6.3 Connecting Distribution

WATER CLOSET CONNECTIONS

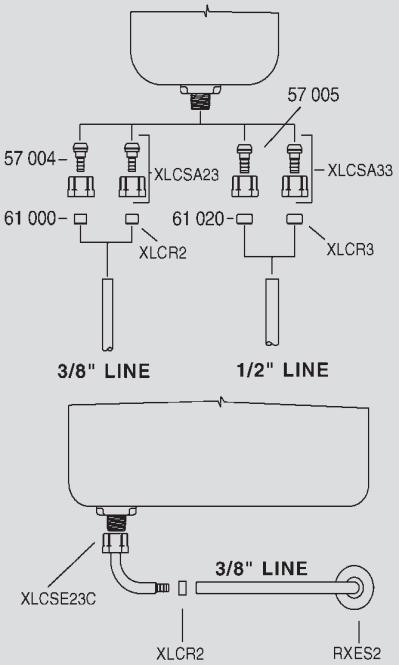

Tighten fixture nut hand tight plus an additional 1/4 turn. Check all connections for leaks.

DO NOT OVERTIGHTEN.

RISER CONNECTIONS

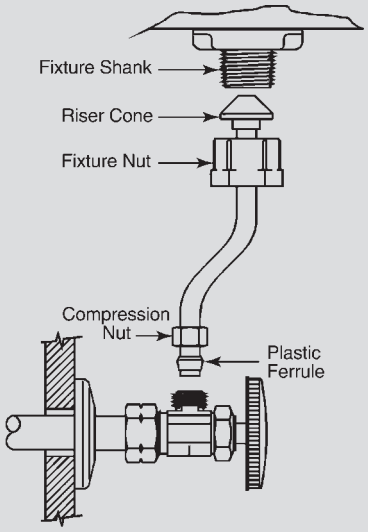

Thread fixture nut onto fixture shank. Tighten fixture nut hand tight plus an additional 1/2 turn. Slide compression nut and supplied plastic ferrule over tube as shown. The long taper of the ferrule goes towards valve. Tighten compression nut according to valve manufacturer's recommendations.

HOSE BIBB CONNECTIONS

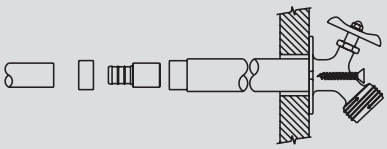

Hose bibbs supported by the structure can be connected directly.

Free standing hose bibbs shall not be supported by ViegaPEX.

Well-anchored drop-ear fittings or metal pipe shall be used to install hose bibbs.

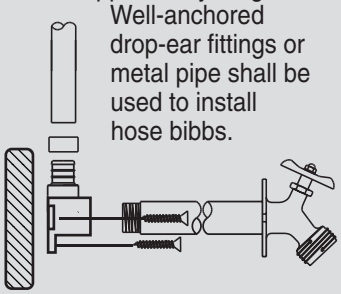

FAUCET CONNECTIONS LAV or KITCHEN

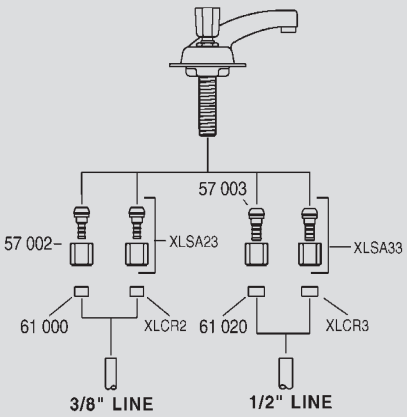

Tighten fixture nut hand tight plus an additional 1/4 turn. Check all connections for leaks.

DO NOT OVERTIGHTEN.

6.4 Water Supply Connections

The main water supply shall be turned off before making water supply connections.

The MANABLOC water supply connection uses a special 1" swivel MANABLOC transition fitting which seals with a rubber washer.

This connection is used on the cold water supply and the hot water supply/return lines. This connection to the MANABLOC does not require any form of thread sealant and none shall be used.

DO NOT USE ANY FORM OF THREAD SEALANT TO MAKE THIS CONNECTION.

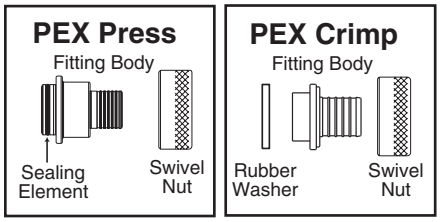

NOTE: Water Service connections to adapt to any type of plumbing supply materials are available. Consult the Viega Product Catalog for a complete listing of available connections.

1. Connect water service adapters to water supply piping before attaching the swivel fitting to the MANABLOC (instructions included with adapters.) Excessive force from threaded fittings, or solvents from solvent welding (PVC or CPVC) will cause damage to the MANABLOC.

   Drill all holes in wood members for water supply/return tubing BEFORE mounting the MANABLOC.

2. When using male or female pipe thread transition fittings, use only Teflon® TAPE to seal pipe threads. DO NOT use pipe dopes, thread sealers, Teflon® pastes, etc.

3. If copper sweat fittings are used anywhere in the MANABLOC water supply line or water heater supply/return lines, these fittings must be soldered, cooled, and flushed of any flux residue before these lines are connected to the MANABLOC.

   Soldering creates a tremendous amount of heat which could melt the MANABLOC, and solder flux contains strong acids and may also contain petroleum products.

   These compounds can attack the plastic materials from which the MANABLOC is made and cause crazing, cracking and failure of the MANABLOC, resulting in leaks and water damage.

4. Ensure that the hot/cold supply lines are connected to the correct supply inlet/outlet on the MANABLOC. Red valves designate hot ports, blue valves designate cold ports.

5. Supply lines shall enter and/or exit the MANABLOC in a straight line. If bending of the supply lines is required, the tubing must be anchored to a framing member to isolate the bend stress from the MANABLOC or use a directional fitting.

6. After the supply tubing has been connected to the transition fitting, place the rubber washer onto the swivel adapter, remove the plastic protective cap from the MANABLOC fitting and thread the swivel nut onto the threaded male adapter by hand. DO NOT CROSS THREAD.

7. Tightening the swivel connections on the inlet/outlet ports:

   a. PEX Press, tighten the 1" swivel nut hand tight only.

   b. PEX Crimp, tighten the 1" swivel nut hand-tight, then a quarter of a turn with channel locks. DO NOT OVERTIGHTEN. Excessive force could damage the MANABLOC. Repeat for all remaining supply line connections.

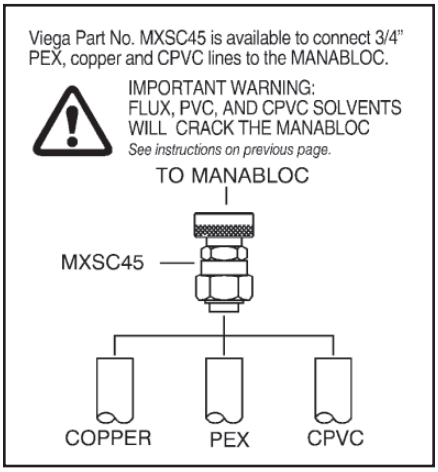

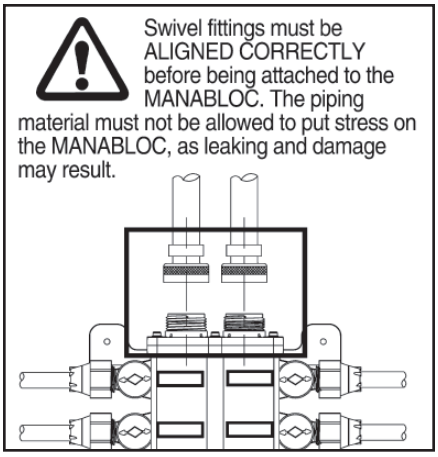

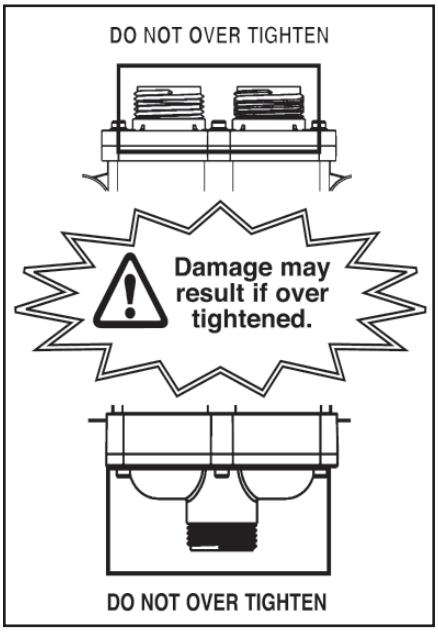

DO NOT ELECTRICALLY GROUND TO THIS SYSTEM.

7. FILLING AND TESTING

1. Upon completion of the installation, the system should be filled and hydrostatically tested. Use only POTABLE water for testing.

WATER TESTING SHALL BE AVOIDED DURING FREEZING CONDITIONS. UNDER NO CIRCUMSTANCES SHALL THE SYSTEM BE TESTED AT TEMPERATURES LOWER THAN 10˚F (-12˚C).

2. Open all connected port valves before filling the system with water or air and pressurizing. If the MANABLOC is filled and pressurized before the port valves have been opened, read the following notice:

NOTICE - VALVE INFORMATION! Opening a port valve to an empty or unpressurized distribution line may cause valve damage.

To prevent potential valve damage or failure, open the port valves before filling and pressurizing the lines. The force of water rushing to fill an empty line can cause the valve's sealing to "clip off", resulting in incomplete sealing or complete valve failure.

CARE must be exercised when opening a port valve to an empty or unpressurized line. The fixture to which the line is connected should be in the OFF position and the valve must be opened slowly until water starts to flow into the line.

DO NOT CONTINUE to open the valve until the line is full and pressurized. Open the valve fully only after the line is up to system pressure. The fixture can then be opened to purge the line of air.

Valve stems are replaceable. Order Stock Code MBRS4.

3. Hydrostatic testing of the MANABLOC plumbing system is to be conducted according to local code requirements. In the absence of local codes, test pressure shall be at least the expected working pressure of the system, but not less than 40 psi nor greater than 225 psi.

NOTE: Some plumbing fixtures may not withstand test pressures greater than 80 psi. Consult fixture manufacturers instructions for pressure limitations or plug all distribution lines at the fixture end. The system shall, at a minimum, withstand the test pressure, without leaking, for a period of 15 minutes.

WARNING! PRESSURES USED IN TESTING CAN BLOW UNMADE OR INCOMPLETE CONNECTIONS APART WITH TREMENDOUS FORCE!

This force is many times greater when air is used as a test medium. To reduce the risk of personal injury, ensure that all connections are completed before testing. Use only the pressure and time required to determine that the system is leak free.

4. Fluid testing the MANABLOC system at temperatures below freezing (less then 32˚F, 0˚C) may be performed using a solution of water and NON-TOXIC antifreeze such as propylene glycol (typically called RV antifreeze).

   If such a solution is used, the antifreeze solution must be sufficiently concentrated to withstand the lowest temperature encountered while the testing fluid is in the system. Antifreeze solutions should be purged and the system flushed with potable water prior to consumer use.

The water heater shall be isolated and not included in the system air test.

5. Air pressure testing of a MANABLOC is acceptable and preferred to hydrostatic testing in areas where cold weather could freeze the system or where water is not available. MANABLOC valves shall be in the open position during the test, which shall utilize a pressure of not less than 40 psi and not greater than 100 psi. The system shall be tested for a minimum of 15 minutes but no longer than 1 hour. During the test, system pressure shall drop no more than 8 psi in the one hour period.

   If the pressure in the system declines more than 8 psi during the minimum 15 minute period, repressurize the system to the original test pressure, and retest.*

   If the system pressure declines more than 8 psi again during the test period, test the distribution line test caps or any other fittings in the system with the approved leak detection solution. (Any connection found to be in question must be replaced or remade and the pressure test repeated.)

   If the solution does not show a leak on any of the caps or fittings, isolate the MANABLOC by turning the valves to the "OFF" position, repressurize if needed, and apply the same solution to the MANABLOC manifold components.

   For leak detection, use only a mixture of Original Palmolive Green™ dishwashing soap (#46100-46200) or Palmolive Ultra™ (#356140 or 46128) mixed with potable water at a ratio of 2 ounces of soap to one gallon of water (mix Ultra at a ratio of 1.5 ounces per gallon.)

*During the initial test pressurization period, the system pressure indicated on the gauge may decrease due to the initial deformation of the pipe, followed

by slow expansion. The pressure drop is dependent on ambient temperature, system capacity, and test pressure but shall not be more than 8 psi in an hour.

Test shall be conducted when significant changes to temperature are not expected. Please note significant changes in ambient temperature also can affect system pressure.

6. Due to the normal contraction of the MANABLOC in extremely cold weather, the tie rods may appear loose. This is normal. DO NOT tamper with the tie rods, they are factory pre-set.

DO NOT ALLOW FLUIDS TO FREEZE IN THE MANABLOC SYSTEM! Fluids freezing in the MANABLOC will damage the unit.

WATER (NOT ANTIFREEZE SOLUTION) MUST BE PURGED OR DRAINED FROM THE SYSTEM IF TEMPERATURES ARE EXPECTED TO FALL BELOW FREEZING (32˚F, 0˚C). Low pressure compressed air can be used for purging.

FOLLOW ANTIFREEZE MANUFACTURERS INSTRUCTIONS FOR CONCENTRATIONS. USE ONLY NON-TOXIC ANTIFREEZE APPROVED FOR USE IN DRINKING WATER SYSTEMS.

8. SYSTEM DISINFECTION

8.1 General

Local codes may require system disinfection. When no other method is available, follow the time limitations and exposure levels show below

1. Use a chlorine solution and one of the exposure durations listed below:

Concentration	Period	Authority
200 PPM	3 hours	IPC/UPC®
50 PPM	24 hours	IPC/UPC®

2. Mix the disinfection solution thoroughly before adding it to the system.

3. The chlorine solution must reach all parts of the system. Open all fixtures (both sides) and flow water until a chlorine smell is present. As an alternative, chlorine test tablets can be used to detect chlorine at each fixture.

4. The chlorine source for the solution can be, but is not limited to, the following:

Chlorine Source	% Active Chlorine	Form	Amount Per 100 Gallon Water for a 200 PPM solution
Laundry bleach	5.25	Liquid	3 pints (48 oz.)

5. After the solution has been in the system for the time required by the Authority Having Jurisdiction or the exposure durations listed in step 1 above, the system shall be flushed completely with potable water.

6. The system must be purged or drained of all water or protected from freezing.

FAILURE TO FLUSH THE SYSTEM NOTICE!
To prevent reduced service life of system components, disinfection solutions shall not be allowed to stand in the system longer than 24 hours. Thoroughly flush the system with potable water after disinfection.

NOTES

Professional products, service and training for professional contractors

Rely on Viega for the most complete line of high tech/high quality plumbing, heating and snow melting systems available today… plus the most comprehensive customer field support in the industry.

Dedicated to education, Viega has been recognized by industry professionals as offering some of the most innovative, informative and interactive training courses. We have a comprehensive list of sessions in a variety of forms from half day workshops to rigorous three-day programs. Call to receive our complete course catalog.

Pro*Press*® System
Flameless copper joining technology.

Pro*PressG*™ System
Flameless copper fuel gas joining technology.

Pure*Flow*® Systems
Flexible PEX tubing plumbing technology.

Pro*Radiant* Systems
Comfortable, efficient heating technology.

S-no-*Ice*® System
Snow and ice melting technology.

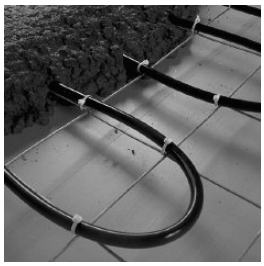

Viega LLC
301 N. Main, Floor 9, Wichita, KS 67202
Phone: 1-877-VIEGA-NA Fax: 1-800-976-9817
www.viega-na.com service@viega.com

Viega IM-PFMB-1007

SECTION 22 11 16.02

ABS Pipe

March | 2010

Pipes, Fittings & Valves

Imperial and Metric Systems

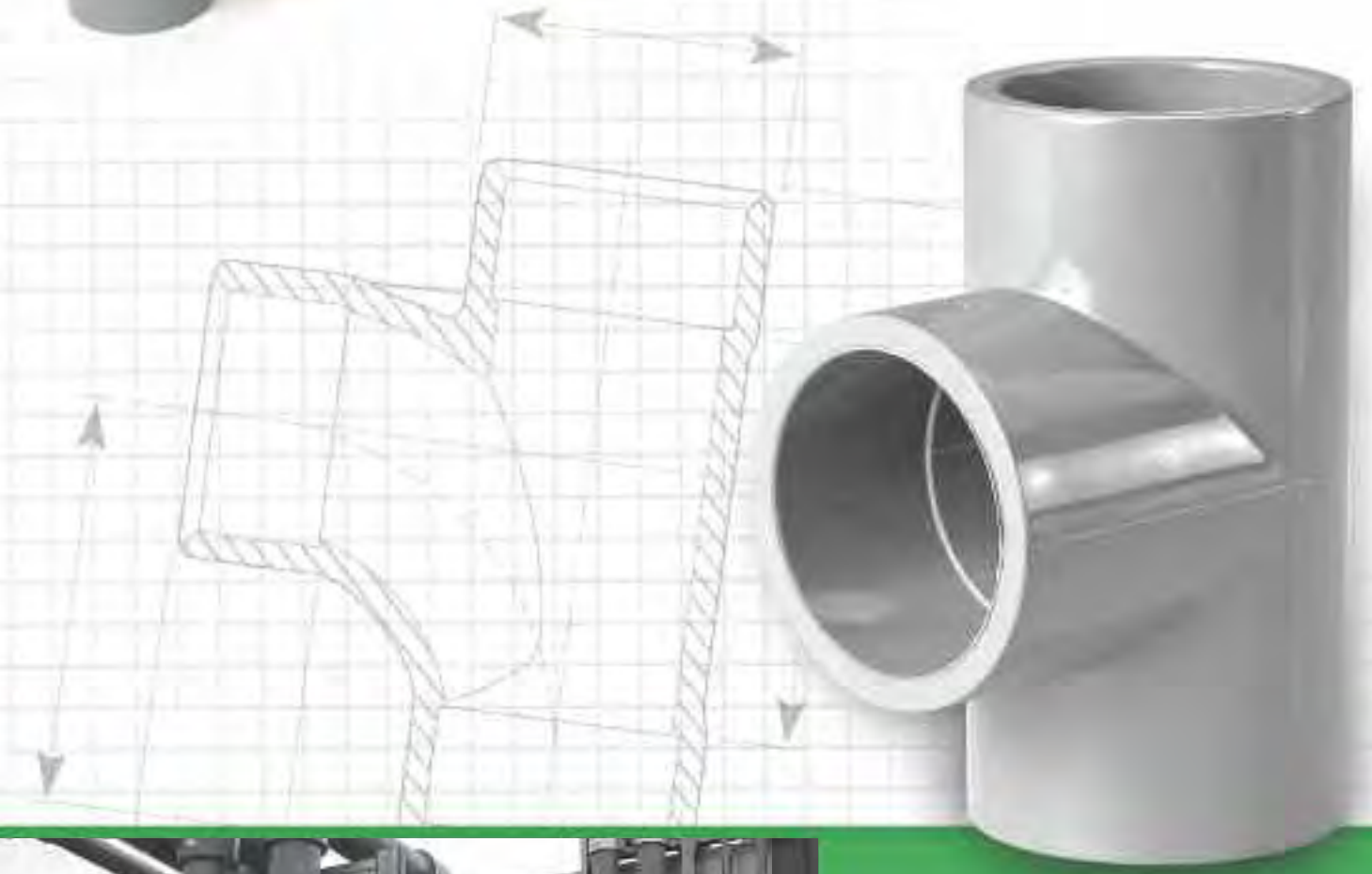

Durapipe ABS including Duracool

Technical Data

Durapipe
abs

Durapipe
abs

COLD AND CONTAMINATED WATER

Durapipe ABS for low temperature fluid transportation.

Durapipe ABS combines corrosion resistance, toughness and economic benefits to provide tremendous advantages for low temperature fluid transportation.

ABS is a solvent welded, fully matched pipework system incorporating pipe, fittings and valves that is available in both imperial and metric sizes.

ABS provides a wide temperature range and the system remains extremely ductile even at temperatures as low as -40°C.

Furthermore, ABS is extremely lightweight and is much easier to handle on-site than traditional materials especially during installation which can significantly reduce both time and cost, as well as being fully WRAS approved.

Key Product Information

- Size Range: 3/8" to 8" *(Imperial)*, 16mm to 315mm *(Metric)*
- Pressure Rating: *(Imperial)* Up to 4" Class E, Up to 6" Class D, Up to 8" Class C
- Pressure Rating: *(Metric)* PN10 - 16 to 250mm, PN8 - 315mm
- Temperature Rating: -40°C to 70°C

Key Product Features

- Lightweight
- Easy to install
- Wide temperature range
- Tough and durable
- Corrosion resistant

Typical Applications

- Chilled water
- Boosted cold water
- Potable water
- Low temperature cooling
- Demineralised water
- Vacuum systems
- Waste water

ABS

ABS

Index

page

Durapipe ABS Introduction 4-7

Technical Information 8-14
Maximum pressure/temperature relationship 8
Flow calculations 8
Flow nomogram 9
Fittings 10
Pipe routing 11
Calculating expansion and contraction 11

Additional Important Information 15

Durapipe ABS Jointing Guide 16-21
Drying times 18
Branch connections 19
The use of bushes, reducers and threaded adaptors 20
Threaded connections 21
Tightening torques for flange bolts in ABS piping systems 21

Comparison of ABS Imperial and Metric Sized Pipe 22

General Information 23-25

Product Specification (Imperial) 26

Product Specification (Metric) 27

Index to ABS Imperial Fittings 28-29
Pipe *plain* 30
Sockets *plain* 31
O-Ring sockets 31
Reducing bushes *plain* 31
Reducing sockets *plain* 32
Elbows 45° *plain* 32
Elbows 90° *plain* 32
Tees 45° *plain* 32
Tees 90° *equal plain* 33
Tees 90° *swept plain* 33
Tees 90° *reducing* 33
Bends 22½° *long radius* 33
Bends 45° *long radius* 34
Bends 90° *long radius* 34
Bends 90° *short radius plain* 34
Saddles *plain* 35
End caps *plain* 35
Socket unions *plain* 35
Imperial/metric socket adaptors *plain* 36
Sockets *plain female BSP thread* 36
Reducing bushes *plain female BSP thread* 36
Elbows 90° *plain female BSP thread* 36
Female threaded adaptors *plain spigot end/female BSP thread* 37
Hexagon nipples *plain spigot/male BSP thread* 37
Male threaded fittings *plain/brass male thread* 37
Female threaded fittings *plain/brass female thread* 37
Male threaded adaptors *plain/male BSP taper threaded* 38
Barrel nipples *plain/BSP taper threaded* 38
Hose adaptors *BSP taper threaded/hose tail* 38
Tank connectors *plain spigot/male BSP parallel thread* 39
Composite unions *plain/brass, female BSP parallel thread* 39
Composite unions *plain/brass, male BSP taper thread* 39
Sockets *female BSP taper thread* 39
Reducing bushes *male/female BSP thread* 40
Elbows 90° *female BSP taper thread* 40
End caps *female BSP taper thread* 40
Plugs *male BSP taper thread* 40
Hexagon nipples *male BSP taper thread* 41
Back nuts *female BSP taper thread* 41
Flanges stub *plain/serrated* 41
Flanges full face *plain/drilled* 42
Flanges blanking *plain/drilled* 43
Backing rings *galvanised mild steel drilled* 44
Gaskets flat *stub flange EPDM* 45
Gaskets full face *drilled EPDM* 45
Valve support plates *galvanised mild steel* 46
O-Ring for socket unions 46

Valves
VKD Double union ball valves 47
TKD 3-way ball valves 47
EV Double union ball valves 48
UC Ball check valves 48

page

UA Air release valves 48
RV Y-Type strainers 49
VM Diaphragm valves 49
PR Pressure relief valves 50
FK Butterfly valves 50

Accessories
One-step solvent cement 51
Eco-cleaner 51
Cobra pipe clips 51
Saddle clips 51
Chamfering and de-burring tools 51
Pipe cutters 51

Index to ABS Metric Fittings 52-53
Pipe *plain* 54
Sockets *plain* 54
Reducing bushes *plain* 55
Reducing sockets *plain* 55
Elbows 45° *plain* 55
Elbows 90° *plain* 56
Tees 45° *plain* 56
Tees 90° *equal* 56
Tees 90° *swept plain* 57
Tees 90° *reducing plain* 57
Bends 90° *short radius* 57
Bends 90° *long radius* 58
End caps *plain* 58
Socket unions *plain* 58
Imperial/metric socket adaptors *plain* 58
Male threaded adaptors *BSP taper male thread* 59
Female threaded adaptors *plain spigot/plain socket/ female BSP thread* 59
Male threaded fittings *plain/brass male thread* 59
Female threaded fittings *plain/brass female thread* 60
Half faced unions 60
Hose adaptors *spigot end/hose tail* 60
Female composite unions *plain/brass, female BSP parallel thread* 60
Male composite unions *plain/brass, male BSP taper thread* 61
Flexible hoses 61
Wall brackets *ABS/brass body* 61
Flanges stub *plain serrated* 62
Flanges blanking 62
Backing rings *galvanised mild steel* 63
Flat gaskets for use with stub flanges 64
Valve support plates *galvanised steel* 64
O-Ring sockets *galvanised steel* 64

Valves
VKD Double union ball valves 65
TKD 3-way ball valves 65
EV Double union ball valves 66
UC Ball check valves 66
UA Air release valves 66
RV Y-Type strainers 67
VM Diaphragm valves 67
PR Pressure relief valves 67
FK Butterfly valves 68

Accessories
Cobra pipe clips 69
Rubber lined pipe clips 69
One-step solvent cement 69
Eco-cleaner 69
Pipe trays 70
Chamfering and de-burring tools 70
Pipe cutters 70

Duracool
Duracool System Overview 72
Technical Considerations when Installing Duracool 73
Sealants for use with Duracool 73
Installation of Thermo-Click Shells 74
Duracool Pipe Preparation 75-76
Data Sheet Thermo-Click Insulation Shells 77
Duracool Product Range 78-80

Durapipe UK Pipework Systems 81

Conditions of Sale 82

Durapipe ABS Specialist pipework system for low temperature fluid transportation

- Fully integrated range of pipe, fittings and valves (manual and actuated)
- Available in both metric and imperial systems
- Easy to install
- Wide temperature range
- Corrosion and limescale resistant
- Reduced installation costs
- Unrivalled level of third party approvals
- 50 year design life

What is ABS?

Durapipe ABS combines numerous performance and economic benefits which make it the ideal solution when there is a requirement for a pipe system to transport low temperature fluids at pressure. ABS is a copolymer of Acrylontrile Butadiene Styrene, blended, to give unrivalled properties and benefits over traditional pipework materials such as copper or steel.

Acrylontrile imparts chemical resistance ensuring the pipework does not corrode or scale. The Butadiene content endows the material with impact strength and toughness, particularly at low temperatures, while the Styrene content contributes to lustre, hence the extremely smooth bores, and also ensures the strength of the material.

Durapipe ABS has been used for the conveyance of low temperature fluids within different Industrial applications for many years.

Where is ABS typically used?

- Water and Waste Treatment
- Process Engineering
- Marine and Shipbuilding
- Food and Beverage Manufacturing
- Chemical Processing
- Offshore
- Energy and Power Generation
- Building Services
- Electronics
- Pharmaceuticals

What is ABS typically used for?

- Chilled Water
- Water Treatment
- Sewage Treatment
- Process Cooling Water
- Pure/Potable Water
- Effluent and Chemical Processing
- Film Processing
- Condensate Discharge
- Cooling Mediums
  - glycol solution
  - ice slurries
  - salt solutions

Tel: +44 (0)1543 279909 Fax: +44 (0)1543 279450

Durapipe ABS Case Study Examples

Water and Waste Treatment

Thames Water, Hampshire

Application – Effluent Treatment

"Durapipe ABS was the most appropriate solution due to its lightweight material and maintenance free qualities."

Darren Brighton, Tuke & Bell

Wessex Water, Dorset

Application – Waste Treatment

"The team at Durapipe provided excellent service from the initial enquiry, continuing throughout the installation process."

Mike Back, Damar Group

Process Industries

Wedge Group

Application – Contaminated Water

"Durapipe ABS was the obvious choice to carry our contaminated water, the product is reliable and hard-wearing."

Andrew MacLean, Newport Galvanisers

Water Purification Units

Application – Pure Water

"The pipework needs to ensure the water being carried does not become contaminated. We believe Durapipe ABS is the best performing product on the market for our requirements."

Derek Spriggs, EWS

Marine and Offshore

North Sea Oil Rig

Application – Potable Water via reverse osmosis

"It was imperative that the chosen pipework system could convey both seawater and potable water without compromising performance on either. I firmly believe Durapipe ABS is the best product on the market to achieve this.

George Haworth, Salt Separation Services

Cruise Ship

Application – Chilled Water

"ABS pipework was ideal for the sophisticated requirements of this large chilled water installation.

Dirk Rötger, Imtech Marine

Building Services

British Museum

Application – Air Conditioning

"We used Durapipe ABS because of its long lifespan and cost effectiveness in comparison to other pipework solutions."

Ashley Pursey, Romec

Atos Origin Data Centre

Application – Boosted Cold Water

"Durapipe ABS doesn't require any hot works, which helps save a lot of time and reduces safety worries on-site. ABS is also limescale resistant and ductile at very low temperatures, which are important factors to consider for a system that will be carrying cold water constantly."

Andy Coles, CW Partnership

Why use ABS?

Reduced Installation Costs

Due to the many factors that make ABS easier to install on-site, Durapipe ABS can deliver installed cost savings when compared to a traditional welded or threaded metal pipe system. This is recognised by an independent BSRIA report.

BSRIA Findings

- Simplified installation technique
- Installation cost reduction of 43% over traditional materials
- Installation labour reduction of 60% over traditional materials

Tough and Durable

The Butadiene element of ABS affords exceptional resistance to accidental damage, even at sub-zero temperatures. Durapipe ABS is therefore extremely ductile and performs at temperatures as low as minus 40°C. In contrast, PVC-U and PVC-C are much less ductile, particularly at temperatures below +5°C. A sufficiently hard impact can cause them to fracture as shown below.

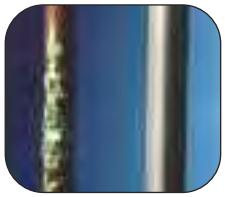

Copper pipe vs ABS pipe

Copper vs ABS

Steel pipe

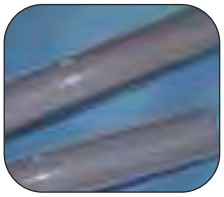

Plastic pipe

Corrosion and Limescale Resistant

Both limescale and corrosion can become a problematic feature of any metal-based pipework system. However, the smooth bore lining of ABS pipework prohibits any limescale build-up throughout the life of the system, maintaining consistent flow rates.

Furthermore, Durapipe ABS is extremely corrosion resistant even with a range of moderate chemicals which can mean less maintenance costs and no costly system replacement.

Lightweight

ABS is approximately one-sixth the weight of steel pipework.

Therefore, Durapipe ABS is much easier to handle, especially during installation on-site.

Fast, Simple and High Integrity Jointing

Solvent welding is a simple process which produces a permanent joint of strength equal to, or exceeding, the pipe itself. No special tools, equipment or hot works permits are required. Please see Pages 16-19 for full details.

Wide Temperature Range

A major advantage of Durapipe ABS over other plastic pipework systems is its ability to perform over a wide temperature range from -40°C to +70°C. (**Note:** usual precautions must be taken to prevent contents freezing).

Comparative temperature ranges

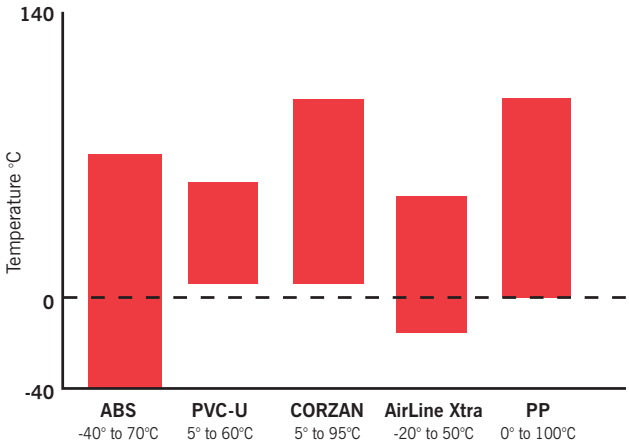

Sustainability and Environment

The energy used to make Durapipe ABS from raw material compares favourably with, for example, steel pipe manufacture because lower conversion temperatures are needed. Furthermore, our processes are clean with low process emissions.

Durapipe ABS pipe and fittings are cheaper and easier to transport because they are lighter in weight than the equivalent metal products. They can be recycled into other products at the end of their life, and scrap during the manufacturing process can also be recycled and re-used. This minimises the need for any thermoplastic pipe scrap entering the waste stream.

Tel: +44 (0)1543 279909 Fax: +44 (0)1543 279450

Why use Durapipe ABS?

Valves and Flow Control

A comprehensive range of valves is available to support the Durapipe ABS system. These include ball, butterfly, diaphragm, non-return, solenoid and air release valve types which can all be either pneumatically or electrically actuated.

Similarly, we also offer a wide selection of flow control products such as flowmeters and sophisticated measuring devices which can be easily incorporated into a matched Durapipe ABS pipeline.

Our in-house Valve department, dedicated to our valves and flow control products, is able to provide expert advice about product selection and system design.

Technical Support

We offer an unrivalled level of technical support where our experienced team can provide product training and installation advice on any given project. They also provide material take-off advice from architects' drawings.

Unrivalled Third Party Standards and Approvals

Durapipe ABS is manufactured to the highest level and meets with the requirements of many international standards and approvals.

Durapipe ABS has a 50 year design life with a residual safety factor of 2:1.

This unrivalled level of third party approval offers total assurance to the designer, installer and end user that Durapipe ABS is a consistent and reliable pipework system.

Approved for use within public water supplies and by the Secretary of State. Durapipe ABS is listed in the "List of Approved Products" published by the DWI.

Germanischer Lloyd

Certificate No. FM 34819

*Applies to Durapipe pipes and fittings - inch series only

Quality Manufacturing

Quality is central to the operation with BS EN ISO9001 certification and within an environmental management system which operates in accordance with the requirements of ISO14001.

Global Distribution Network

Durapipe ABS is available from an extensive international network of distributors and stockists.
Please contact us for details of your nearest outlet.

Company Chemist

Our internal company chemist is at your disposal. If you have concerns regarding the chemical combination that a pipework system needs to convey, we can evaluate suitability of the chemical you wish to convey and advise on the best material to use for the system.

Abrasion Resistance

Durapipe ABS offers good resistance to abrasion and erosion from aggressive slurries.

No Metallic Stabilisers

Durapipe ABS does not contain any harmful metallic stabilisers, and is widely used to convey high purity deionised water in semi-conductor and pharmaceutical applications.

Non-Toxic

Materials used are selected for their toxicological properties, and suitability for conveying cold potable water.

Technical Information

Maximum pressure/temperature relationship

When temperature of contents exceeds 20ºC the working pressure of the system must be reduced accordingly (see table below).

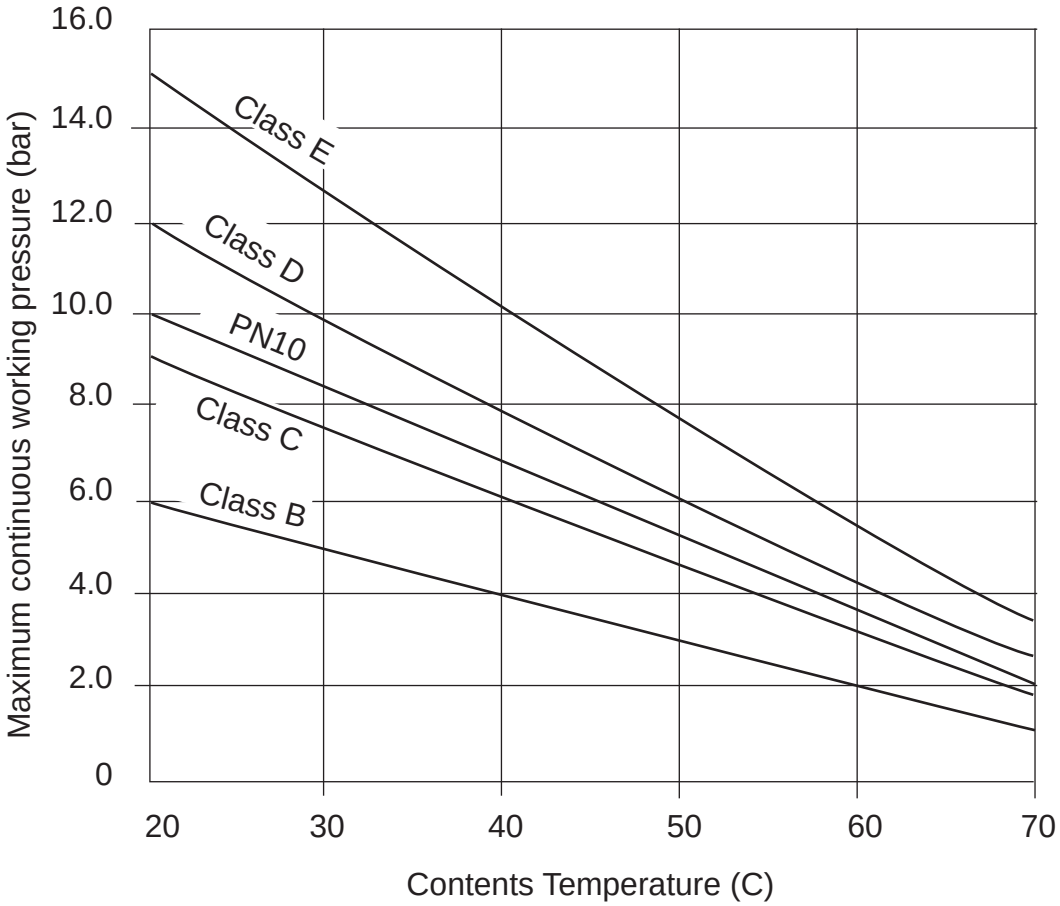

Flow calculations

Pressure drop due to friction in pipes conveying water can be determined using the Flow Nomogram on page 9.

The pressure drop at a given flow rate can be determined as follows:

1. Obtain the internal diameter of the pipe to be used by referring to the dimension table right:
2. Mark this diameter on Scale A.
3. Mark the required flow rate in litres per second on Scale B.
4. Draw a straight line connecting the points on Scales A and B and extend this to Scales C and D.
5. The velocity of flow in metres per second is determined from the intersection with Scale C.
6. The frictional head loss in metres per 100 metres of pipe can then be read off Scale D.

Table of Pipe Internal Diameters

Classes C to E in accordance with BS 5391 Part 1

Size	OD	Class B	Class C	Class D	Class E	Class T
3/8"	17.1				13.7	10.1
1/2"	21.4				17.4	14.2
3/4"	26.7				21.7	19.5
1"	33.6		29.6		27.4	25.0
1 1/4"	42.2		37.2		34.4	31.6
1 1/2"	48.3		42.7		39.3	36.3
2"	60.3		53.1		49.1	45.9
2 1/2"	75.2		65.0			
3"	88.9		78.5		72.3	
4"	114.3		101.1		93.1	
5"	140.2		121.8			
6"	168.3		148.5	142.7		
8"	219.1		193.7			
10"	273.1	250.9				
12"	323.9	297.7				

Note: Dimensions are given for guidance only, please contact our Technical Support Department for accurate information.

In accordance with ISO 161

Size	PN10
16	13.0
20	16.8
25	21.2
32	27.8
40	34.6
50	43.2
63	54.6
75	65.0
90	78.0
110	95.4
125	108.6
140	121.6
160	139.0
200	173.6
225	195.4
250	217.8
315*	273.4

*315mm is PN8 rated.

Tel: +44 (0)1543 279909 Fax: +44 (0)1543 279450

Flow nomogram

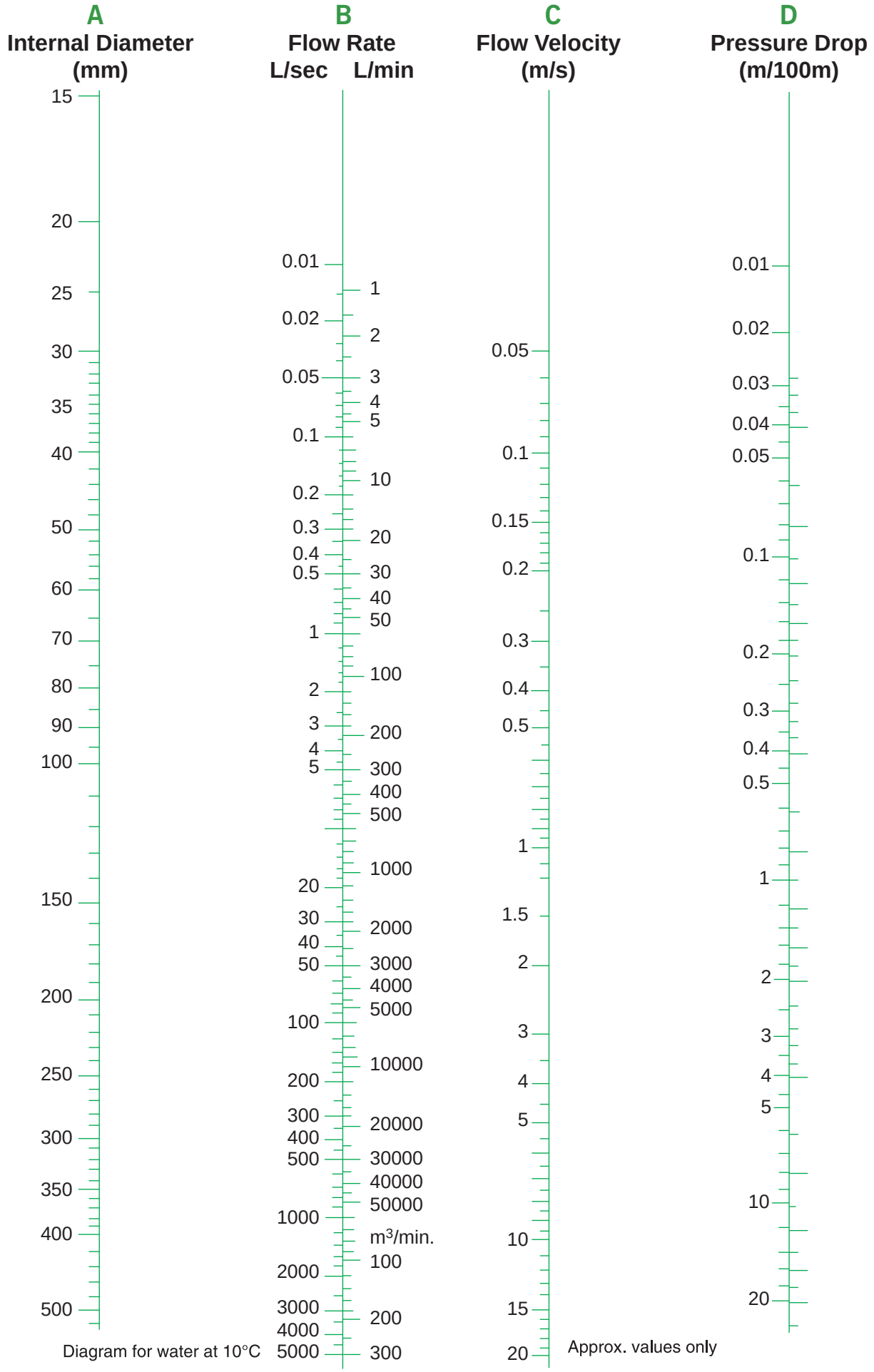

Diagram for water at 10°C

Approx. values only

Fittings

The calculation of pressure drop in fittings is more complex but calculations can be made for equivalent lengths of straight pipe using the formula E=F x D where:

E = equivalent pipe length (metres)
F = fittings constant (see table below)
D = fitting internal diameter (mm)

To calculate the total pressure drop in the system, the equivalent straight pipe lengths for fittings is then added to the total straight pipe length to obtain the total drop.

Fittings constant

90º elbow	0.03
45º elbow	0.01
90º tee - straight through	0.01
90º tee - side branch	0.06
90º bend	0.01
45º bend	0.01
Reducing bush (per size reduction)	0.015
Butterfly valves	0.13
Diaphragm valves	0.23
Check valves	0.05

The values are included as a guide to aid calculation of overall system performance and should not be used in isolation.

Tel: +44 (0)1543 279909 Fax: +44 (0)1543 279450

Pipe routing

Systems installed above ground should be designed such that there are sufficient changes in direction to accommodate expansion or contraction. The support method described below will ensure that the pipework can move axially, without snaking. Utilise all available pipe flexibility. Do not place clips too close to changes in direction.

Calculating expansion and contraction

Temperature variations in a pipework system will increase or decrease the length of each pipe. This is the result of temperature changes in the fluid carried and also from ambient temperature variations.

The rate of expansion or contraction of pipework is dependent on its length, its coefficient of expansion and the temperature difference.

Increase/decrease in pipe length is given by the formula:

$$\text{Expansion} = L \times \alpha \times \Delta T$$

where:
- L = length (mm)
- α = coefficient of linear expansion
- ΔT = temperature difference of the pipe (ºC)

The coefficient of linear expansion for ABS: 10×10^{-5} per ºC

Rule of thumb: ABS expands/contracts 1mm/metre/10 ºC temperature change:

Example:

What is the expansion/contraction of an insulated, 30m long, ABS Condenser water main, installed at 15°C, operating at a maximum temperature of 35°C and a minimum temperature of 5°C?

Expansion:

$L = 30{,}000$ mm

$\alpha = 10 \times 10^{-5}$

$\Delta T = 35 - 15 = 20°C$

Expansion $= 30{,}000 \times 10 \times 10^{-5} \times 20°C$

$= \underline{60mm}$

Contraction:

$L = 30{,}000$ mm

$\alpha = 10 \times 10^{-5}$

$\Delta T = 15 - 5 = 10°C$

Contraction $= 30{,}000mm \times 10 \times 10^{-5} \times 10°C$

$= \underline{30mm}$

Hence the system must be designed, using expansion loops, the natural flexibility of pipe, or expansion bellows, to cater for a differential movement, with an expansion of 60mm and a contraction of 30mm.

The system should be designed to cater for the greater amount of movement of either expansion or contraction.

Catering for pipe movement

Systems installed above ground should be designed to ensure that there are sufficient changes in direction to accommodate expansion and contraction. The support method described later will ensure that the pipework can move axially without snaking.

If sufficient changes in direction are not available within the design of the system, alternative methods of catering for pipe movement can be considered such as expansion loops or flexible rubber bellows.

Expansion loops

The length of unrestrained pipe (free leg length) required to accommodate expansion can be calculated from the graph overleaf.

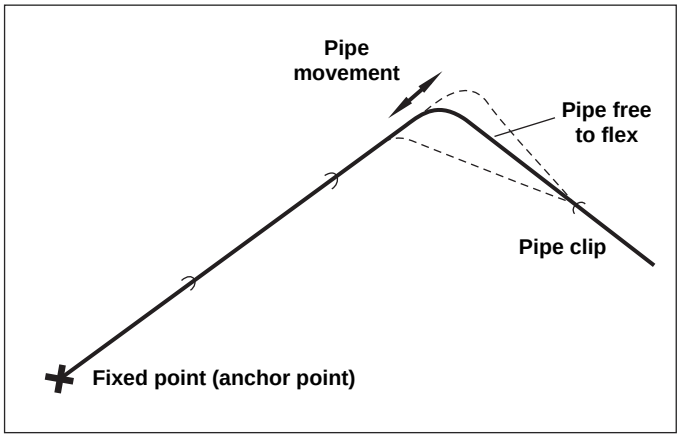

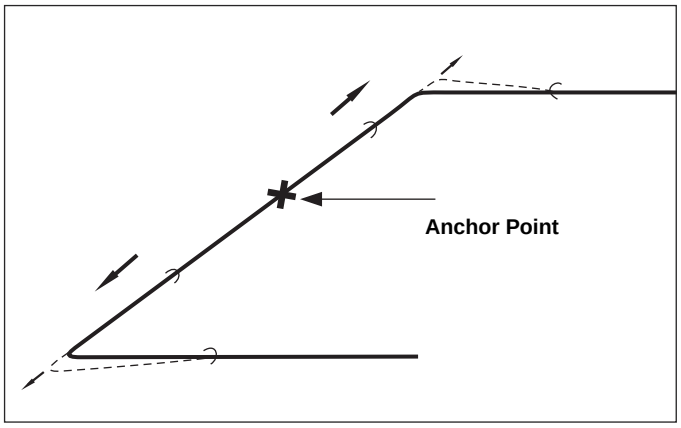

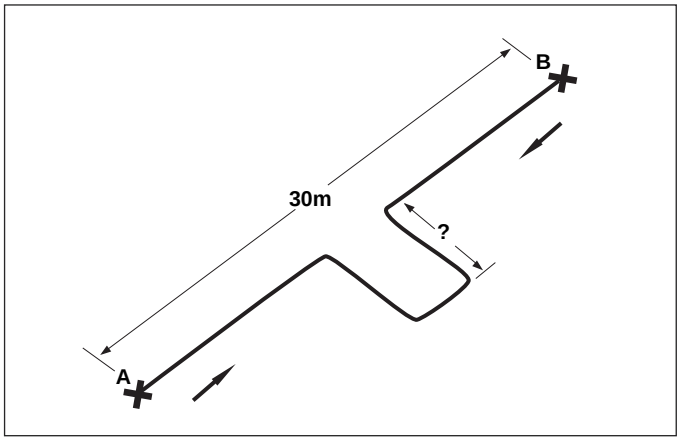

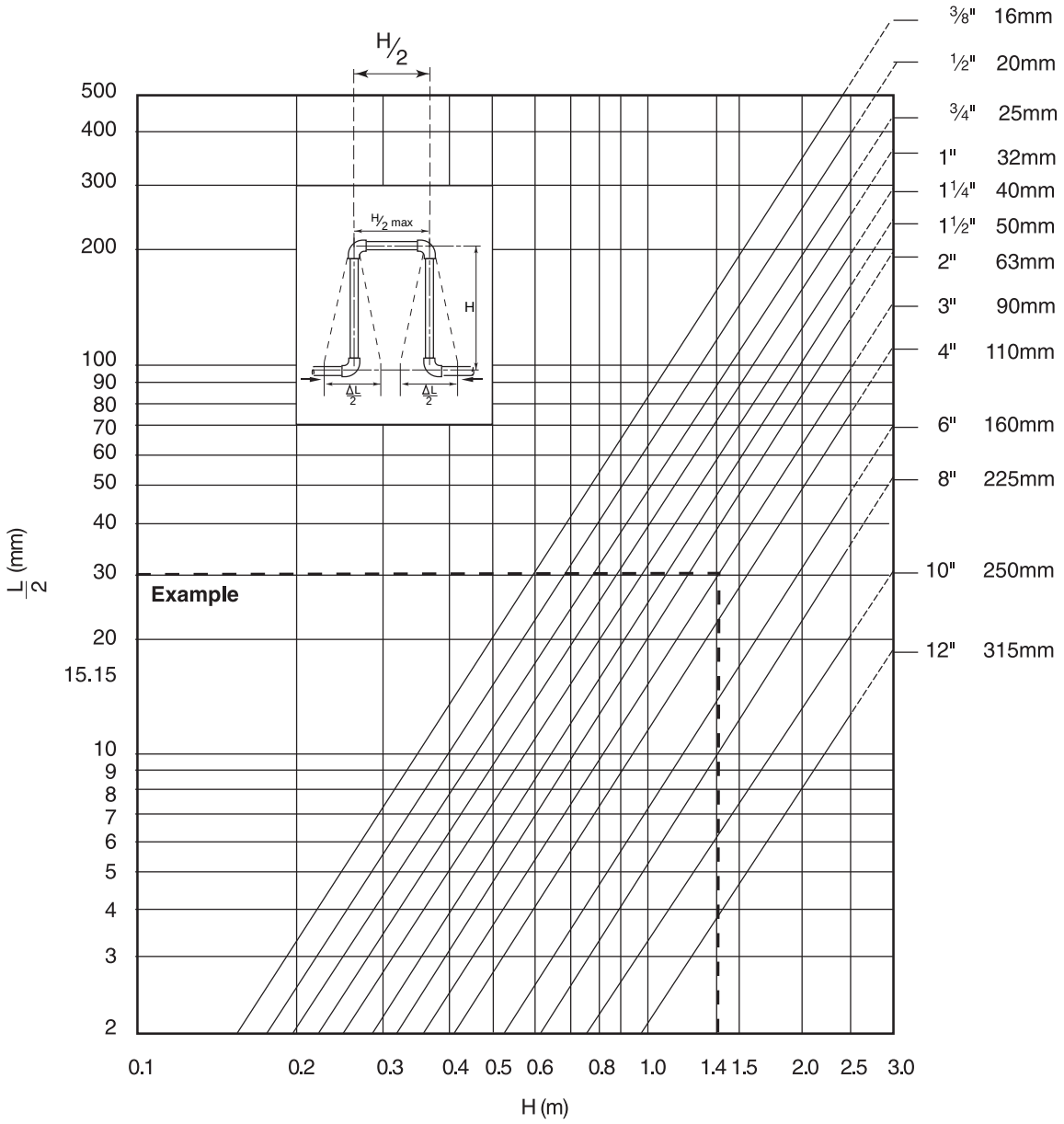

Example:
Calculate the size of expansion loop required for a 90mm diameter pipe expanding 60mm and contracting 30mm:
Based on the worst case ie. 60mm expansion, $\frac{\Delta L}{2} = 30\text{mm}$

Draw a horizontal line from the vertical section to meet the 90mm pipe gradient line.
Drop a perpendicular from the intersection point to the horizontal scale. The figure obtained is the free leg length of the loop required.
Hence, in this instance a loop measuring 1400mm long x 700mm wide will cater for ±60mm movement i.e. the loop will cater for both the expansion and contraction of the pipe.

Tel: +44 (0)1543 279909 Fax: +44 (0)1543 279450

Expansion bellows

Bellows may also be used in place of or in conjunction with the natural flexibility of the ABS. These must be approved for use by the bellow manufacturers for use with thermoplastic pipework. Bellows must be installed in accordance with manufacturer's recommendations.

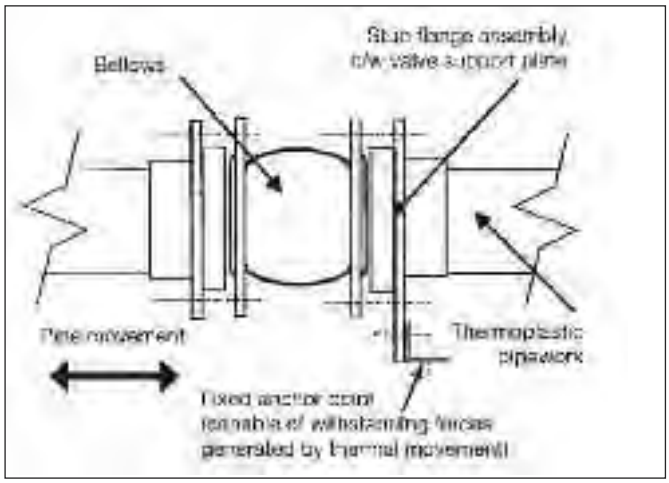

Anchor points

The direction of pipe movement can be controlled by the use of anchor points at strategic positions. There are a number of methods of securely anchoring plastic pipes, some of which are detailed below. However it should be noted that tight fitting pipe supports should not be used since damage to the pipe could occur.
Note: See above for advice on anchoring of bellows.

Construction of typical anchor points

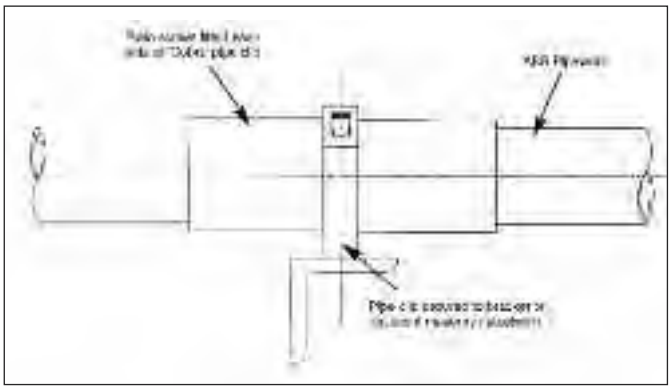

1. Small Bore (up to 4" Pipework)

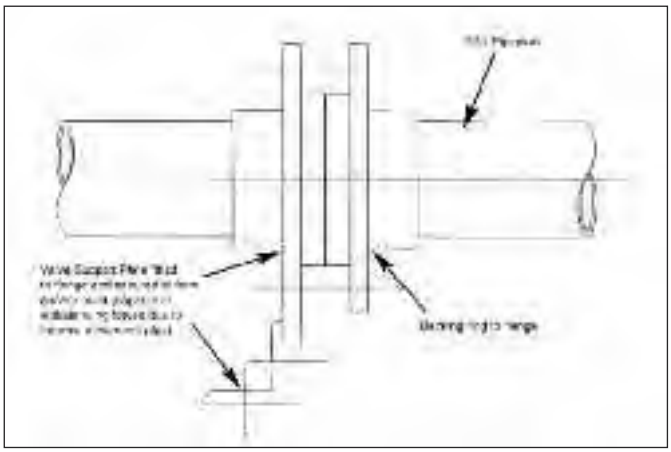

2. Larger pipe (above 4" Pipework)

Pipe supports and clips

Pipe supports and clips should provide lateral restraint and allow free, unrestricted, axial pipe movement. Standard 'drop rods' may not provide sufficient lateral restraint and the ABS pipe could start to 'snake'.
Durapipe Cobra clips are designed to meet these requirements.
A suitable alternative would be mild steel saddle clips designed with a clearance between the pipe and the clip. All steel brackets in contact with the plastic pipe should be free of sharp edges to avoid damaging the pipe.

Support centres

The recommended distance between supports for ABS pipes filled with water is given in the table below. This table is based on the thinnest wall pipe in each size. For sizes 1", 1¼", 1½", 2", 3" and 4" the support distance can be increased by 10% for class E pipes. Where the contents have a specific gravity greater than 1, the distance must be decreased by dividing the recommended centre distances by the specific gravity. The details shown are for horizontal pipes. For vertical pipes, support centres may be increased by 50%.

Pipe trays are available for sizes 16mm, 20mm, 25mm and 32mm (see page 69). These allow support distances to be increased to 2.0 metres.

Size mm/imperial	Support distance (m) at 20°C	Support distance (m) at 50°C	Support distance (m) at 70°C
16mm / ⅜"	0.8	0.5	0.4
20mm / ½"	0.9	0.6	0.5
25mm / ¾"	1.0	0.7	0.6
32mm / 1"	1.1	0.8	0.7
40mm / 1¼"	1.2	0.9	0.7
50mm / 1½"	1.3	1.0	0.7
63mm / 2"	1.4	1.1	0.8
75mm / 2½"	1.5	1.2	0.8
90mm / 3"	1.6	1.2	0.9
110mm / 4"	1.8	1.3	1.0
125mm	1.9	1.4	1.0
140mm / 5"	2.0	1.5	1.1
160mm / 6"	2.1	1.6	1.2
200mm	2.2	1.7	1.3
225mm / 8"	2.3	1.8	1.5
250mm	2.5	2.0	1.7
10"	2.7	2.2	1.9
315mm / 12"	2.9	2.4	2.1

Support of heavy equipment
Large valves, strainers and other heavy equipment should always be independently supported to prevent undue loading onto the ABS system. Durapipe valve support plates have been designed for this purpose and may be used in place of flange backing rings.

Buried pipes

Recommendations covering essential requirements for installations below ground may be summarised as follows:
In general, trenches should not be less than a metre deep.
Trenches should be straight sided, approximately 300mm wider than the pipe diameter to allow proper consolidation of packing materials.
Trench bottoms should be as level as is practical.
Large pieces of rock, debris and sharp objects should be removed.
Alternatively gravel can be laid approximately 100mm deep on the floor of the trench. (Sand may be used but subterranean water is liable to wash sand away and leave the pipe unsupported.)
If pipes are jointed above ground, they should remain undisturbed for 2 hours before being lowered into the trench.
After laying, pipes should be covered with gravel or similar material to a depth of 100mm above the crown of the pipe. The gravel should be extended sideways to both trench walls and compacted. This should be done prior to testing, with joints left exposed.
Care should be taken to ensure that sharp objects, stones, etc, are prevented from falling into the trench before covering the pipe.
After pressure testing, joints should be covered with gravel or similar material, and back filling completed.
A section of pipe installed below ground to the above recommendations is shown in the illustration.

Anchor blocks
For wholly solvent welded systems the pipework is pressure balanced and anchor thrust blocks are not required.
When rubber ring joints are used it is necessary to provide concrete anchor blocks at all sudden changes in direction such as elbows, bends, tees etc. This is necessary to withstand the forces generated by system pressurisation.
For greater detail, users in the U.K. are recommended to study the Code of Practice CP 312 published by the Pipe and Fittings Group of the British Standards Institute covering installations above and below ground.

Tel: +44 (0)1543 279909 Fax: +44 (0)1543 279450

Additional Important Information

Thermal insulation
Some insulation products can contain substances capable of having a detrimental effect on thermoplastic pipework eg. certain types of foam rubber insulations can cause pipes to fail where the ABS is conveying liquids at temperatures above 30°C.

Recommended insulation - a list of some of the common types of insulation materials known to be suitable with ABS pipework are as follows:
Fibre wool, such as 'Rockwool'
Armaflex Class 1 HT
Koolphen K Phenolic foam
Polystyrene
Note - the above list is not exhaustive – please contact our Technical Support Department if further assistance is required.

Some adhesives can also be detrimental. Do not bond insulation to ABS. (This comment also applies to any tapes, adhesives, or other substances used to secure the heating tape to the pipework.)

Trace heating tapes
The selection of heating tapes with silicone rubber, woven wire or woven polyester outer sheaths will eliminate the risk of plasticiser migration. These tapes are therefore preferred for use on thermoplastic systems.

Pipe contents identification
Do not put self-adhesive labels directly on to pipe surfaces as this may be detrimental to pipe performance. It is recommended that some sort of barrier, such as aluminium foil, is placed between pipe and identification label.

Intumescent mastic and mastic sealants
Certain mastic sealants are formulated with phthalates. Phthalates are known to be extremely aggressive toward ABS materials, and therefore confirmation of the suitability of any mastic sealant should be determined before being used in conjunction with ABS pipework.

Pipe clips
It is important that the composition of pipe clips and their linings do not include substances which might have a detrimental effect upon the ABS pipe. Please check for suitability before use.
We strongly recommend the use of Durapipe Cobra clips for pipe sizes up to and including 160mm OD / 6"NB, wherever circumstances allow.

Pneumatic testing
Pneumatic testing is not recommended because of the risk to personnel or property if, for example, a joint has been temporarily assembled without solvent cement and has then been mistakenly left in that condition. Such joints could separate suddenly and violently during the test.
Also, leak detection sprays designed to detect air leaks on steel pipework can damage thermoplastics.

Contact with synthetic oils
Some synthetic oils are unsuitable for use with thermoplastic pipe systems. The main types of synthetic oils identified as being incompatible with thermoplastic pipe systems includes Esters, Polyalkylene Glycols and Organic Phosphates.

Freezing conditions
Precautions should be taken to prevent contents freezing, as this can cause pipework to split.

Mono-ethylene glycol can be added to the system to lower the freezing point. See opposite for advice on insulation and trace heating.

Contact with fluxes
Some fluxes can be detrimental to ABS. Care should be taken when soldering copper pipework directly above, or close to, ABS pipework.

Buried pipes
Do not lay ABS in contaminated ground eg. 'brown-field' sites.
Do not lay ABS in ground where spillages of chemicals may occur.

Thread sealants
Some thread sealants can damage ABS. PTFE tape should be used when making threaded connections. See page 21 for further information.

Resistance to U.V. (sunlight)
Care should be taken to avoid exposure to U.V. light, e.g. sunlight, particularly during storage. This will cause discoloration and deterioration of the ABS material. Whilst this is a surface effect only it is recommended that precautions be taken to prevent this happening. If stored outdoors pipe should be covered with opaque sheeting. If installed outdoors it can be protected from the effects of U.V. by insulating or painting.

Pressure surges
Durapipe ABS pipework can withstand pressure surges within the limitations detailed within CP312 Part 2:1973 and its amendment dated 1977.
On no account should pressure surges be allowed to exceed the maximum continuous working pressure calculated using the graph on page 8.

Durapipe ABS Jointing Guide

Solvent cement welding offers a simple and quick means of constructing high integrity, leak-free joints.

The solvent cement operates by chemically softening the joint surfaces. Joint integrity will be greatly reduced if these surfaces are not clean and properly prepared.

Durapipe ABS solvent cement **must** be used.
The jointing procedure detailed below must be followed.

This relates to the new 'one-step' solvent cement. With this cement it is not necessary to abrade pipe or fitting (unless making a joint on to old ABS pipe).

No attempt should be made to increase the clearance between the pipes and fittings.

Procedure

1. The pipe must be cut clean and square. A suitable wheel cutter will eliminate swarf. As an alternative (and on larger sizes) a carpenters saw should be used, however this may create dust and swarf which can enter the system.

2. Chamfer the end of the pipe using a coarse file or suitable chamfering tool. The chamfer should be approximately 45° by 3mm to 5mm depending on the pipe size. Reducing bushes should also be chamfered (unless where a moulded chamfer is included).

3. Mark the pipe a known distance from the end and clear of the area to be cleaned. This mark should be used to confirm full insertion of pipe into socket of fitting.

4. Ensure joint surfaces are clean and free from moisture. Clean surfaces thoroughly with Durapipe Eco-cleaner using lint free cloth/paper towel.

5. Using a clean brush apply cement to the pipe and fitting. The joint surfaces should be completely covered by cement.

   Cement should be applied using an appropriate size brush and tin of cement. It is important to apply cement quickly to enable assembly without excessive force being required.
   When applying cement with brush, the size of the brush should be approximately half the size of the pipe to be jointed - brush size up to 2$^{1}/_{2}$" (63mm) for 0.5 litre and up to 3" (75mm) for 1 litre tins.

Tel: +44 (0)1543 279909 Fax: +44 (0)1543 279450

6. Immediately after applications of cement, push pipe fully home into the fitting. Do not twist. Hold the pipe and the fitting for times varying from a few seconds on sizes 3/8" or 16mm up to 1 minute on sizes 12" or 315mm. The slight taper moulded into the fitting may otherwise cause it to slide off the pipe with consequent loss of joint strength. Application of the correct amount of cement will result in a neat bead of cement at the edge of the fitting and at the edge of the pipe. Excessive deposits inside the fittings must be avoided as these can weaken the wall, particularly on smaller sizes.
   When working under cold conditions make sure the joints are free from frost and moisture.

7. Wipe off excess cement from the outside of the joint.

8. Using the mark previously made, check that the pipe has been fully inserted.

9. Do not disturb a joint for least 10 minutes. On larger sizes do not subject the joint to bending or twisting forces for at least 4 hours. When making subsequent joints, which can be done without waiting, take care not to transmit forces to freshly made joints in the system.
10. Replace lids on containers.

CAUTION

- **DO NOT use near naked flames**
- **DO NOT smoke in the working area**
- **DO NOT use in confined spaces**
- **DO NOT joint in the rain or wet conditions**
- **DO NOT use dirty brushes**
- **DO NOT use dirty or oily cleaning cloths**
- **DO NOT use the same brushes for different cements**
- **DO NOT dilute or decant Durapipe ABS solvent cement**
- **Follow safety instructions on Durapipe solvent cement and Eco-cleaner containers**
- **Always wear appropriate personal protective equipment**

Notes

1. The integrity of Durapipe ABS systems may be affected if Durapipe ABS One-step solvent cement and Durapipe Eco-cleaner are not used.
   Durapipe UK disclaims responsibility for any Durapipe ABS system constructed with any other cement or not fabricated in accordance with the instructions herein.
2. Use the appropriate size of solvent cement tin/container and method of application for the size of pipe and fitting to be assembled.
3. To achieve the correct speed of application on sizes 5"/140mm and above, cement should be applied simultaneously to pipe and fitting, by two people.

Drying times

The drying times will vary with fit, amount of solvent cement applied, ambient temperature and working pressure. It is recommended that, wherever possible, joints of sizes up to 8"/225mm are allowed to dry for at least 24 hours, and sizes 10" and 12"/250mm and 315mm for at least 48 hours.
These guidelines are based on an ambient temperature of between 10°C to 40°C. Longer drying times will be required at lower and higher ambient temperatures.

It is recognised that there will be occasions when the system will need to be put into service within a few hours of being made. A rough but safe working guide where the ambient temperature is between 10°C to 40°C and the contents temperature does not exceed 20°C is as follows:

Size Range	Up to 2 1/2" 75mm	3" to 4" 90mm to 125mm	5" & 6" 140mm & 160mm	8" 200mm & 225mm	10" & 12" 250mm & 315mm
Drying Time	0.5 hour / bar	1.0 hour / bar	1.5 hours / bar	2.0 hours / bar	48 hours minimum

Note - minimum drying period should never be less than 1 hour.

An indication of the number of joints to be made per litre of cement is as follows:

Size mm	Size inch	Recommended container size	Joints per litre ABS
16 - 32	3/8 - 1	0.5 Litre	400
40 - 63	1 1/4 - 2	0.5 Litre	200
75 - 110	2 1/2 - 4	0.5 Litre	70
125 - 140	5	1 Litre	20
160 - 225	6 - 8	1 Litre	10
250 - 315	10 - 12	1 Litre	5

Tel: +44 (0)1543 279909 Fax: +44 (0)1543 279450

Branch connections - reduced bore

Reduced branch connections can be made as follows:

Imperial range:
Bushed equal tees or Y-Pieces, solvent cemented saddles.

Metric range:
Bushed equal tees or Y-Pieces, reduced branch tees.

Saddles permit branch connections to be made with the main pipe in situ. The following procedure must be followed carefully:

1. After making sure that the pipe is empty, drill a hole in the pipe wall to suit the connection. The size of hole and cutter to be used for each size of saddle is indicated below:

Pipe size (Imperial)	Hole diameter (mm)	Cutter size (Imperial)
2	48	1 7/8
3	61	2 3/8
4	74	2 7/8
6	74	2 7/8

2. Mark out the area covered by the saddle on the pipe.

3. Clean surfaces with Eco-cleaner.

4. Feed on to pipe two worm drive (Jubilee) clips which will clamp the saddle during fitting. These should be placed either side of the socket on the saddles. Apply cement to pipe area and saddle. **It is important to apply cement quickly**.

5. Position saddle immediately, ensuring that spigot locates in hole in pipe wall. Clamp in place using worm drive clips without delay.

6. Wipe off any excess cement.

7. Replace lids on containers.
8. Clean brush with Eco-cleaner.

Important:
1. See page 18 for details of drying times. Allow 24 hours before removing straps.
2. On no account should a branch tee be constructed by drilling through the wall of a pipe and/or fitting and attempting to solvent weld a smaller fitting into the hole.

The use of bushes, reducers and threaded adaptors

Reducing bushes

Reducing bushes offer a neat and simple method of reducing socket size in the minimum of space.

Care must be taken to properly prepare all jointing surfaces as recommended earlier, with the end of the bush being chamfered (unless a moulded chamfer is included).

Example in the use of reducing bushes

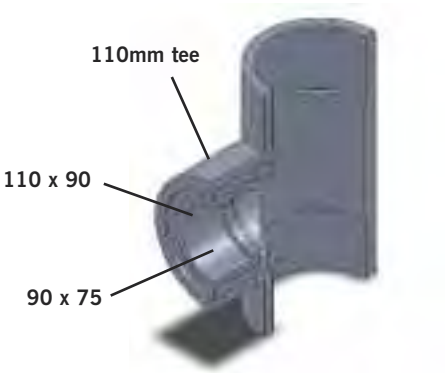

The use of reducers

All fittings have female ends, dimensionally controlled for cold fusion jointing. In addition, reducing sockets in the Metric series have controlled outside diameter at the larger end. This allows use as a male or female component, as illustrated.

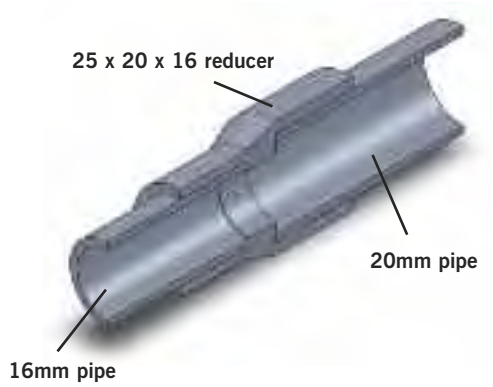

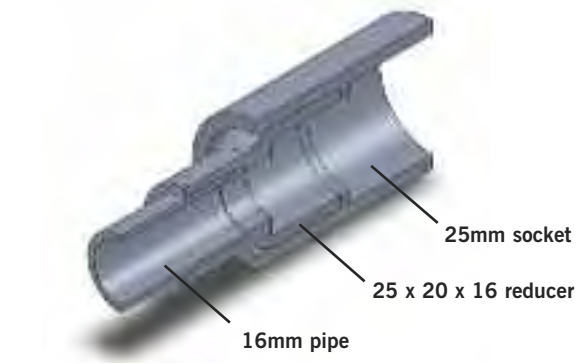

Metric series threaded adaptors

Female and male threaded adaptors have controlled inside and outside diameters on the plain end. They can therefore be used as a male or female component.

Tel: +44 (0)1543 279909 Fax: +44 (0)1543 279450

Threaded connections

Connections - plastics to metal

There are several recommended methods to connect metal and plastic systems:
Composite unions
Flanges
Male threaded fittings
Female threaded fittings

Plastics expand or contract more than metals for any given change in temperature. The practice of connecting plastic threaded fittings to metal threads is not recommended where the joint is likely to experience a temperature change of more than +/-5ºC, otherwise leaks may occur.

Composite unions are available with brass male or female BSP threaded adaptors.

If it is required to cut a thread on to Durapipe ABS pipe, use a sharp die especially reserved for plastic pipes and cut full thread depth without lubricant, in one operation.
This should only be attempted on pipe sizes up to 2" n.b. Class T pipe must be used. Pipes from Durapipe ABS metric range are not suitable for threading.
Assembly should be carried out by hand and final tightening by a strap wrench, if necessary.
Extra care must be taken not to overtighten or damage the thread.
Pipe wrenches must not be used.
It is recommended that PTFE tape be used when making threaded joints/connections.
Any other sealing compound must be confirmed by Durapipe as being suitable.
'Boss White' and anaerobic adhesive sealants, such as Loctite 542 and 572, can chemically attack ABS and must **not** be used.

Connection to instrumentation

Instrumentation connections can be made by drilling through pipe and socket where the material is at its thickest and tapping the hole to receive a threaded fitting, as shown below:

Pipe size	Connection size
16mm-63mm/3/8"-2"	Use tees, reducing bushes and threaded fittings
75mm-110mm/2½"-4"	Max. tapping ½" BSP.
125mm-140mm/5"	Max. tapping ¾" BSP.
160mm & above/6" & above	Max. tapping 1" BSP.

Such connections, if correctly drilled and tapped with full thread form will be limited to Class C/PN10 pressures.

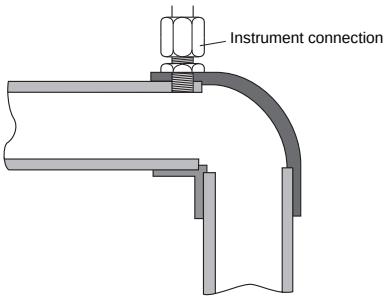

Flanged joints

Full face flanges are available from ½" to 6".

Stub flanges are available from 2" to 12" and in metric sizes from 16mm to 315mm and provide a convenient means of converting from Imperial to Metric systems in sizes 8"/200mm and above.

The correct galvanised mild steel backing ring and rubber gasket must be used with both types.

Flange bolting procedure

The following procedure is recommended for installing Durapipe ABS flanges:

1. Inspect flange faces and ensure that they are clean and undamaged.
2. Check that the correct backing ring and rubber gaskets have been supplied. Durapipe supplies a matched system of flanges and backing rings - do not interchange Metric and Imperial components.
3. Loosely assemble flanges. Ensure that flanges and bolt holes align and that the flange faces are parallel. Ensure that the gasket is correctly positioned between the flanges.
4. Ensure that the appropriate sized washer is placed under both bolt heads and nuts.
5. Tighten the nuts and bolts in a diagonally opposite sequence (see below) to ensure even loading around the flange to avoid distortion. It is recommended that the nuts and bolts be tightened as uniformly as possible progressively from a finger tight start.
6. Repeat as necessary until tightness of all bolts is achieved.

Tightening torques for flange bolts in ABS piping systems

Recommended Torque Values (Nm)

Size	Torque
16	15
20	15
25	15
32	15
40	20
50	30
63	35
75	40
90	40
110	40
125	50
140	50
160	60
200	70
225	70
250	80
315	100

The tolerance on torque is +/-10%

Tightening sequence

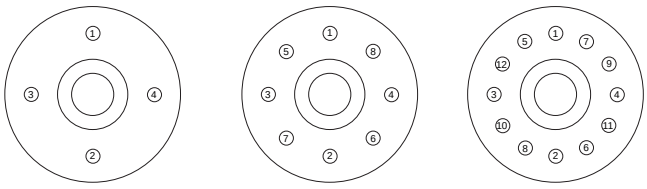

Comparison of ABS Imperial and Metric Sized Pipe

Tabulated below is a comparison of imperial and metric sized Durapipe ABS pipe. They are produced to different standards, but can be joined together using flanges or adaptors.

The systems are also designated differently; the imperial system refers to the nominal bore size; the metric system relates to the outside diameter.

Both systems are produced with the outside diameter as the controlled dimension. This enables the same fitting of a particular size to be joined to all classes of pipe in that size.

Please refer to the pipe section in this brochure for pipe sizes available from Durapipe UK.

Threaded systems
Imperial systems Class T ABS pipe can be machined to BSP parallel or BSP taper thread forms. Metric pipe is not produced with an outside diameter suitable for threading.

Imperial System (BS 5391)							Metric System (ISO 15493)		
Size (nominal bore) (imperial)	Minimum mean outside diameter (mm)	Minimum wall thickness (mm)					Size outside diameter (mm)	Minimum mean outside diameter (mm)	Minimum wall thickness (mm) PN10
		Class B	Class C	Class D	Class E	Class T			
3/8	17.0				1.6	3.4	16	16.0	1.4
1/2	21.2				1.9	3.5	20	20.0	1.5
3/4	26.6				2.4	3.5	25	25.0	1.8
1	33.4		1.9		3.0	4.2	32	32.0	2.0
1 1/4	42.1		2.4		3.8	5.1	40	40.0	2.5
1 1/2	48.1		2.7		4.4	5.8	50	50.0	3.2
2	60.2		3.4		5.4	7.0	63	63.0	4.0
2 1/2	75.0		4.7				75	75.0	4.7
3	88.7		5.0		8.06		90	90.0	5.7
4	114.1		6.4		10.3		110	110.0	6.9
							125	125.0	7.9
5	140.0		8.8				140	140.0	8.8
6	168.0		9.4	12.3			160	160.0	10.0
							200	200.0	12.5
8	218.0		12.2				225	225.0	14.1
10	272.6	10.5					250	250.0	15.6
12	323.4	12.4					315	315.0	19.7*

2 1/2" and 5" pipes are PN10 rated.
*315mm is rated at PN8.

Properties guide

Chemical Resistance and Performance Data	Typical applications	Unsuitable for the following uses	Sizes and jointing information
Moderately strong mineral acids	Chilled water	Applications over 70°C	Metric: 16mm to 315mm OD
Caustic and ammoniacal solutions	Low temperature brine	Bleaches	Imperial: 3/8" to 12" NB
Most inorganic salt solutions	Potable water	Solvents	Jointed by solvent cement welding
Some detergents	Process water	Domestic hot water	Threaded fittings available
Temperature range -40°C to +70°C		Flammable substances	

Note: Temperatures given are for guidance only, please check before specifying.

General Information

Handling and storage

The high impact strength of Durapipe ABS systems provides some protection against damage but care should be taken at all stages of handling, transportation and storage.

Pipe must be transported by a suitable vehicle and properly loaded and unloaded, e.g. wherever possible moved by hand or mechanical lifting equipment. It must not be dragged across the ground.

The storage should be flat, level and free from sharp stones.

Lengths

Pipe lengths stored individually should be stacked in a pyramid not more than one metre high, with the bottom layer fully restrained by wedges. Where possible, the bottom layer of pipes should be laid on timber battens at one-metre centres. On-site, pipes may be laid out individually in strings. (Where appropriate, protective barriers should be placed with adequate warning signs and lamps.)

Bundles

Bundled packs of pipe should be stored on clear, level ground with the battens supported from the outside by timbers or concrete blocks. For safety, bundled packs should not be stacked more than three metres high.
Smaller pipes may be nested inside larger pipes. Side bracing should be provided to prevent stack collapse.

Similar precautions should be taken with fittings and these should be kept in protective wrappings until required for use.

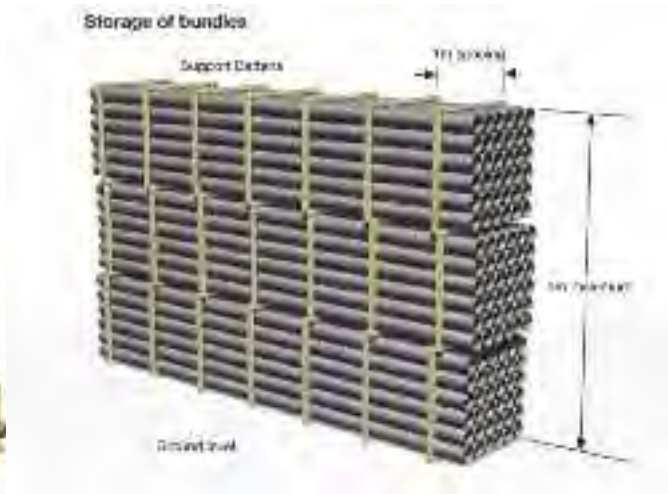

Health and Safety at Work Act and COSHH Regulations
Attention is drawn to the requirements in the UK of this Act and to the Control of Substances Hazardous to Health (COSHH) Regulations. Durapipe UK cannot accept responsibility for accidents arising from the misuse of its products because of bad installation or incorrect application.

Material safety data
Material Safety Data sheets are available on our website.

Filling and flushing
When purchasing chemicals for either flushing or long-term system use, suppliers should be advised that this is for ABS material. Guidance on the suitability of various system flushing or filling fluids with ABS can be found in the Durapipe Chemical Data catalogue, 04900004.

Testing
It is suggested that the following test procedure be followed, after joints have been allowed to dry for the appropriate minimum time (at least 24 hours up to 8"/225mm, sizes 10"/250mm and 12"/315mm require a minimum of 48 hours at 20°C).
The system should be divided conveniently into test sections.
Fill section with cold water making sure that no air pockets remain. Do not pressurise at this stage.
Check system for leaks. If none are apparent, check for and remove any remaining air. Increase pressure up to 3bar. Do not pressurise further at this stage.
Leave section pressurised for 10 minutes. If pressure decays, inspect for leaks and rectify as necessary. If pressure remains constant, slowly increase the hydrostatic pressure to $1^1/_2$ times nominal operating pressure.
Leave section pressurised for a period not exceeding 1 hour. During this time pressure should not change.

Caution
Personnel must stand well clear when pressure testing systems.
Note: If extended times are required to achieve hydrostatic pressure, either leakage has occurred or air remains in the line. Inspect for leakage and if none is apparent, reduce pressure and check for trapped air. This must be removed before further pressurisation commences.

Colour
Durapipe ABS products are a mid-grey colour, generally in accordance with BS5252, colour ref. 18 B 21 and RAL 7001.

Auto CAD drawings
Two dimensional drawings of Imperial and Metric products contained in this brochure are available on our website www.durapipe.co.uk. Available in Fastrack format.

ABS dimensions and standards

Imperial
The Durapipe ABS Imperial System is manufactured in accordance with the relevant British Standards as shown below. Kitemark licences are also held, where applicable, for both pipes and fittings. BS 5391 (pipe) BS 5392 (fittings).

Metric
The Durapipe ABS Metric System is manufactured generally in accordance with the relevant international standards as shown below:
ISO 15493
KIWA 49 and 549
DIN 8062 and 8063

Threaded fittings conform to the requirements of BS 21/DIN 2999/ISO7. Socket dimensions of Durapipe ABS Metric fittings for solvent welding comply with ISO/DIS 727-1.

Materials
Durapipe ABS material is UK Water Regulations Advisory Scheme approved for cold water services and is listed in the Water Fittings and Materials Directory.
Durapipe ABS formulation does not contain any harmful metallic stabilisers.

Gaskets and seals
Gaskets and O-Ring seals are made from EPDM except where stated otherwise.

Interchangeability
Components in the imperial and metric ranges are not interchangeable, except for $2^1/_2$"/ 75mm and 5"/140mm.

Approvals
Durapipe ABS Imperial series pipe is covered by Kitemark Licence No. KM07961 to BS 5391:Part 1 1976.
Durapipe ABS Imperial series fittings are covered by Kitemark Licence No. KM07962 to BS 5392:Part 1 1976.
Durapipe ABS Imperial series pipe and fittings are UK Water Regulations Advisory Scheme approved for cold water services.
Durapipe ABS Metric series pipe and fittings are UK Water Regulations Advisory Scheme approved for cold water services.
Durapipe ABS one-step solvent cement is UK Water Regulations Advisory Scheme approved.
Durapipe Metric pipework is approved for various non-essential services on board ships by:
Lloyds Register of Shipping
Det Norske Veritas
Bureau Veritas
American Bureau of Shipping
Germanischer Lloyd

Ordering by code
Code numbers should be used when ordering products e.g.

Imperial

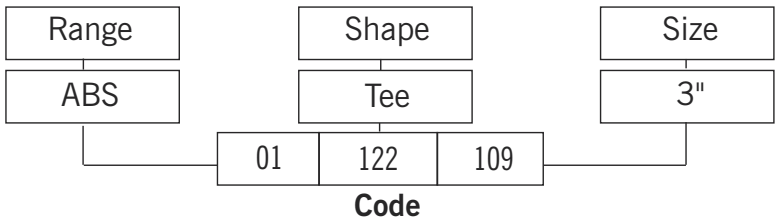

Metric

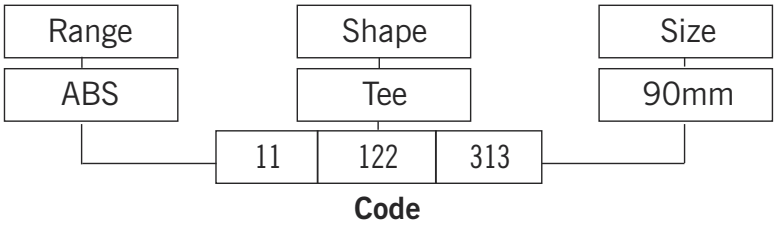

Abbreviations
The following list of abbreviations is used in this catalogue:

ABS - Acrylonitrile Butadiene Styrene
BS - British Standards
ISO - International Standards Organisation
DIN - Deutsche Industrie Normen (German Industrial Standards)
KIWA - Keuringsinstituut Voor Waterleidingartikelen (Netherlands)
ANSI - American National Standards Institute
BSP - British Standard Pipe Thread
EPDM - Ethylene Propylene Rubber
FPM - Fluorine Rubber (e.g. Viton®)
PTFE - Polytetraflouroethylene (eg Teflon®)

® Dupont registered trade name.

Mechanical, Physical and Electrical Data	Test Method	Value
Mechanical		
Tensile strength at yield (23ºC)	ASTM D635	45MN/m^2
Tensile modulus of elasticity	ASTM D635	2200MN/m^2
Poissons ratio	-	0.35
Izod impact strength at 23ºC (notched)	ASTM D256 (1/8")	35kJ/m^2
Charpy impact strength at 23ºC (notched)	-	20kJ/m^2
Physical		
Specific gravity	ASTM D792	1.04
Softening point (BS2782:Part 1 Method120B:1976)	ISO R 306 (5kg) (heating rate unknown)	99ºC
Linear co-efficient of thermal expansion	-	10.1 x 10^{-5}/ºC
ISO75 HDT/Ae 1.8Mpa	ASTM D648 (unannealed, 1/4", 18.56 Kgf/cm2)	78ºC
Thermal conductivity	-	0.157W/mºC
Specific heat	-	2.1kJ/kg.K
Self ignition temperature	-	540ºC
Electrical		
Dielectric constant	-	2.9 at 10^{3}Hz
		2.8 at 10^{6}Hz
Volume resistivity IEC 93	-	>1.E^{14}ohm m

Product Specification

IMPERIAL RANGE

DURAPIPE ABS PIPES

In accordance with the dimensional and testing requirements of BS 5391
Third Party Approved with British Standard Kitemark Licence
(where applicable).

DURAPIPE ABS FITTINGS

In accordance with the dimensional and testing requirements of BS 5392
Third Party Approved with British Standard Kitemark Licence
(where applicable).

MATCHED SYSTEM

The ABS products (see below) shall be from a single manufacturer to ensure complete integrity, quality and compatibility between pipes, fittings and valves. Manufacturers warranties may be compromised if a system is installed with materials from various manufacturers. Where this is not possible then any alternative products should be confirmed as being at least equivalent to that which is normally supplied.

QUALITY SYSTEM

Pipes, fittings and valves shall be manufactured in an environment, which operates a Quality Assurance System assessed to ISO 9001.

ENVIRONMENTAL SYSTEM

The manufacturer of pipes, fittings and valves shall be able to demonstrate compliance with applicable environmental legislation and products shall be manufactured in an environment where documented performance reviews are undertaken and an Environmental Management System is successfully assessed to ISO 14001.
The manufacturer shall offer ABS solvent cements and cleaners, specially formulated to minimise any adverse effects on the environment during installation of the ABS system.

THIRD PARTY APPROVALS

The manufacturer shall have the following Third Party Approvals:

British Standard Kitemark Licence
KM07961 for Durapipe Inch pipes to BS 5391
KM07962 for Durapipe Inch fittings to BS 5392

WRAS Water Regulations Advisory Scheme
0605104 for Durapipe Inch pipes & fittings (1100)
0702501 for Durapipe one-step solvent cement (5560)

Department of the Environment
M & E 100 Standard Specification for Air Conditioning

Department of Health and Social Security
Renal Dialysis Applications

APPROVAL FOR USE IN CONTACT WITH DRINKING WATER

All ABS pipes, fittings and solvent cement shall be listed in the Water Fittings and Materials Directory to show compliance with the requirements of the United Kingdom Water Regulations Advisory Service.
Copies of certification of compliance with these approvals are available for inspection.

DESIGN LIFE

Pipes, fittings and valves shall be designed to operate continuously for 50 years at their maximum rated pressure at a working temperature of 20°C.
Process Control Testing must be carried out during manufacture and documented on each and every production batch.
Fittings and Pipes will be subjected to a pressure test of 3.2 x maximum recommended working pressure for 1 hour at 20°C during 1st and 2nd hours of production, then every 6 hours for fittings, and 8 hours for pipes.
Pipes are in addition to be impact tested after conditioning at 0°C for 1 hour.
Fittings are in addition to be subject to stress relief testing at 150°C.
Pipes and fittings shall undergo dimensional, marking and visual inspection at the frequency outlined above.

CHEMICAL SUITABILITY

The manufacturer shall publish detailed chemical resistance data to enable the suitability of the ABS material, seals and gaskets to be determined by designers and specifiers.
The manufacturer shall also employ a qualified and experienced chemist and provide a free-of-charge service advisory service for assessing the suitability of its ABS material, seals and gaskets.

INSTALLATION SPECIFICATION

The installation must be carried out by competent persons.
The contractor shall be required to provide technical documentation relating to the manufacturers recommended Installation procedures.
The manufacturer shall publish Installation recommendations, and shall also provide a free-of-charge training service for designers and installers, with appropriate written confirmation of attendance.

DURAPIPE ABS BALL VALVES

True union design, end load resistant with full pressure and shock resistant anti blow out device which conforms to design and endurance testing requirements of BS 5392 Part 1 1976, and DIN 3230 Part 3 Leak Rate One (Water and Air).
The following testing will have been successfully conducted:
Drop Tight and Bubble Tight test.
Hydrostatic Shell Test 1.5 x Maximum Working Pressure.
Seat Test 1.1 x Maximum Working Pressure.

PRESSURE RATING
Up to size 2" - PN15 (Class E) at 20°C (VKD series), PN10 (EV series)
2½" to 4" - PN15 at 20°C (VKD series)

SEATS AND SEALS
Seats: PTFE material fitted with O-Ring compensators.
Seals: Standard size O-Ring type for ease of replacement.
Available in EPDM or FPM materials.

END CONNECTIONS
Plain socket ends, or BSP threaded.

ACTUATION
Options: Electric or pneumatic.

DURAPIPE ABS DIAPHRAGM VALVES

Equipped with a maintenance free hand wheel actuator with spindle extension to indicate the position of the valve open or closed. The body retaining bolts are fixed from the underside, to provide a crevice free outer surface to prevent accumulation of debris or risk of corrosion of exposed steel bolts from chemical spillage.
Valves will have been hydrostatically pressure tested to the requirements of BS 5392 Part 1 1976, BS 5156, ISO 7508 and DIN 3230 Part 3 Leak Rate One.

PRESSURE RATING
½" to 4" - PN10 at 20°C

DIAPHRAGM TYPE
Choice of EPDM, FPM or PTFE will be available.

END CONNECTION
These may be plain spigot ends or flanged.

ACTUATION
Options: Pneumatic

DURAPIPE ABS BALL CHECK VALVES

These shall be double union with plain socket or BSP threaded ends.

PRESSURE RATING
½" to 2" - PN10 at 20°C.

SEALS
Available in either EPDM or FPM.

DURAPIPE ABS BUTTERFLY VALVES

Reinforced Polypropylene body, fully lined, with ABS disc.
Full flanged design, with oval holes/inserts to suit various standard flange drillings.
Lever operated, with 10 x 10° position stops, and locking device.

PRESSURE RATING
1½" to 10" - PN10 at 20°C
12" - PN8 at 20°C

PRIMARY LINER
Available in EPDM, FPM, or NBR.

ACTUATION
Electric, Pneumatic, or Gearbox (standard on sizes over 8").

Tel: +44 (0)1543 279909 Fax: +44 (0)1543 279450

METRIC RANGE

DURAPIPE ABS PIPES

KIWA 49, ISO 161/1, and ISO DIS 15493 (where applicable). Pressure rating PN10 at 20°C up to 250 mm. PN8 at 20°C for 315 mm.

DURAPIPE ABS FITTINGS

KIWA 549, ISO 727 and ISO DIS 15493 (where applicable). Pressure rating PN10 at 20°C up to 250 mm. PN8 at 20°C for 315 mm.

MATCHED SYSTEM

The ABS products shall be from a single manufacturer to ensure complete integrity, quality and compatibility between pipes, fittings and valves. Manufacturers warranties may be compromised if a system is installed with materials from various manufacturers. Where this is not possible then any alternative products should be confirmed as being at least equivalent to that which is normally supplied.

QUALITY SYSTEM

Pipes, fittings and valves shall be manufactured in an environment which operates a Quality Assurance System assessed to ISO 9001.

ENVIRONMENTAL SYSTEM

The manufacturer of pipes, fittings, and valves shall be able to demonstrate compliance with applicable environmental legislation and products shall be manufactured in an environment where documented performance reviews are undertaken and an Environmental Management System is successfully assessed to ISO 14001.

The manufacturer shall offer ABS solvent cements and cleaners, specially formulated to minimise any adverse effects on the environment during installation of the ABS system.

THIRD PARTY APPROVALS

The manufacturer shall have the following Third Party Approvals:

WRAS Water Regulations Advisory Scheme
0510074 for Durapipe Metric pipes and fittings
0702501 for Durapipe one-step solvent cement (5560)

DEPARTMENT OF HEALTH AND SOCIAL SECURITY
Renal Dialysis Applications

DET NORSKE VERITAS

BUREAU VERITAS

APPROVAL FOR USE IN CONTACT WITH DRINKING WATER

All ABS pipes, fittings and solvent cement shall be listed in the Water Fittings and Materials Directory to show compliance with the requirements of the United Kingdom Water Regulations Advisory Service.

Copies of certification of compliance with these approvals are available for inspection.

DESIGN LIFE

Pipes, fittings and valves shall be designed to operate continuously for 50 years at their maximum rated pressure at a working temperature of 20°C.

Process Control Testing must be carried out during manufacture and documented on each and every production batch.

Fittings and Pipes will be subjected to a pressure test of 3.2 x maximum recommended working pressure for 1 hour at 20°C during 1st and 2nd hours of production, then every 6 hours for fittings and 8 hours for pipes.

Pipes are in addition to be impact tested after conditioning at 0°C for 1 hour.

Fittings are in addition to be subject to stress relief testing at 150°C.

Pipes and fittings shall undergo dimensional, marking, and visual inspection at the frequency outlined above.

CHEMICAL SUITABILITY

The manufacturer shall publish detailed chemical resistance data to enable the suitability of the ABS material, seals, and gaskets to be determined by designers and specifiers.

The manufacturer shall also employ a qualified and experienced Chemist and provide a free-of-charge advisory service for assessing the suitability of its ABS material, seals, and gaskets.

INSTALLATION SPECIFICATION

The installation must be carried out by competent persons.

The contractor shall be required to provide technical documentation relating to the manufacturers recommended Installation procedures.

The manufacturer shall publish Installation recommendations, and shall also provide a free-of-charge training service for designers and installers, with appropriate written confirmation of attendance.

DURAPIPE ABS BALL VALVES

True union design, end load resistant with full pressure and shock resistant anti blow out device which conforms to design and endurance testing requirements of BS 5392 Part 1 1976, and DIN 3230 Part 3 Leak Rate One (Water and Air).

The following testing will have been successfully completed:

Drop Tight and Bubble Tight test.
Hydrostatic Shell Test 1.5 x maximum working pressure
Seat Test 1.1 x maximum working pressure.

PRESSURE RATING
16mm to 63mm - PN 16 at 20°C (VKD series), PN10 (EV series)
75mm to 110mm - PN16 at 20°C (VKD series)

SEATS AND SEALS
Seats: PTFE material fitted with O-Ring compensators.
Seals: Standard size O-Ring type for ease of replacement.
Available in EPDM or FPM materials.

END CONNECTIONS
Plain socket ends or BSP threaded.

ACTUATION
Options: Electric or Pneumatic.

DURAPIPE ABS DIAPHRAGM VALVES

Equipped with a maintenance free hand wheel actuator with spindle extension to indicate the position of the valve open or closed. The body retaining bolts are fixed from the underside, to provide a crevice free outer surface to prevent accumulation of debris or risk of corrosion of exposed steel bolts from chemical spillage.

Valves will have been hydrostatically pressure tested to the requirements of BS 5392 Part 1 1976, BS 5156, ISO 7508 and DIN 3230 Part 3 Leak Rate One.

PRESSURE RATING
20mm to 110mm - PN10 at 20°C

DIAPHRAGM TYPE
Choice of EPDM, FPM or PTFE will be available.

END CONNECTION
These may be plain spigot ends or flanged.

ACTUATION
Options: Pneumatic

DURAPIPE ABS BALL CHECK VALVES

These shall be double union with plain socket or BSP threaded ends.

PRESSURE RATING
20mm to 63mm - PN10 at 20°C.

SEALS
Available in either EPDM or FPM.

DURAPIPE ABS BUTTERFLY VALVES

Reinforced Polypropylene body, fully lined, with ABS disc.
Full flanged design, with oval holes/inserts to suit various standard flange drillings.
Lever operated, with 10 x 10° position stops, and locking device

PRESSURE RATING
50mm to 250mm - PN 10 at 20°C
315mm - PN 8 at 20°C

PRIMARY LINER
Available in EPDM, FPM, or NBR.

ACTUATION
Electric, Pneumatic, or Gearbox (standard on sizes over 225mm).

Valves

VKD Double union ball valves Manual – EPDM seals

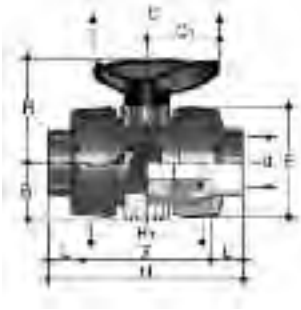

d	DN	PN	L	Z	H	E	B	C	gms	Code
3/8	10	16	14.5	74	103	55	49	66	195	H0 DKA 101
1/2	15	16	16.5	70	103	55	49	66	195	H0 DKA 102
3/4	20	16	19	77	115	66	59	75	315	H0 DKA 103
1	25	16	22.5	83	128	75	66	85	435	H0 DKA 104
1 1/4	32	16	26	94	146	87	75	97	655	H0 DKA 105
1 1/2	40	16	30	104	164	100	87	110	880	H0 DKA 106
2	50	16	36	127	199	122	101	134	1560	H0 DKA 107

Options:

*FPM seals (plain ends) order H0 DKB****
*FPM seals (threaded ends) order H0 DKB****

Manual valves can be supplied with locking kits - further information is available from our Valve Department.

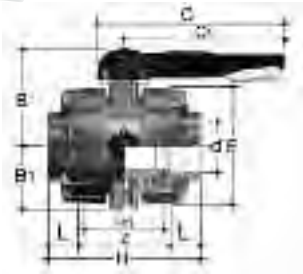

d	DN	PN	Z	L	H	H_1	E	B	B_1	C	C_1	gms	Code
2 1/2	65	16	147	44	235	133	164	164	87	225	175	4380	H0 DKA 108
3	80	16	168	51	270	149	203	177	105	327	272	7200	H0 DKA 109
4	100	16	186	61	308	167	238	195	129	385	330	11141	H0 DKA 110

Options:

*FPM seals (plain ends) order H0 DKB****

TKD 3-way ball valves Manual – EPDM seals

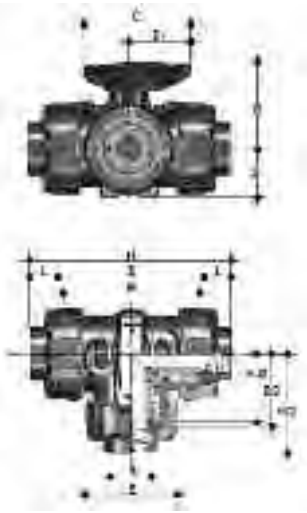

T port design

d	DN	PN	H	Z	C	C_1	B	B_1	gms	Code
1/2	15	16	125	95	67	40	54	29	310	H0 TTA 102
3/4	20	16	146	114	85	49	65	34.5	550	H0 TTA 103
1	25	16	166	129	85	49	65.9	39	790	H0 TTA 104
1 1/4	32	16	195.5	151	108	64	82.5	46	1275	H0 TTA 105
1 1/2	40	16	211	166	108	64	89	52	1660	H0 TTA 106
2	50	16	253.5	199	134	76	108	62	2800	H0 TTA 107

Options:

*FPM seals (plain ends) order H0 TTB****
*FPM seals (threaded ends) order H0 TTB****

Manual valves can be supplied with locking kits - further information is available from our Valve Department.

L port design

d	DN	PN	H	Z	C	C_1	B	B_1	gms	Code
1/2	15	16	125	95	67	40	54	29	310	H0 LTA 102
3/4	20	16	146	114	85	49	65	34.5	550	H0 LTA 103
1	25	16	166	129	85	49	65.9	39	790	H0 LTA 104
1 1/4	32	16	195.5	151	108	64	82.5	46	1275	H0 LTA 105
2	50	16	253.5	199	134	76	108	62	2800	H0 LTA 107

Options:

*FPM seals (plain ends) order H0 LTB****

VKD & TKD ball valves can be supplied electrically or pneumatically actuated.

EV Double union ball valves Manual – EPDM seals

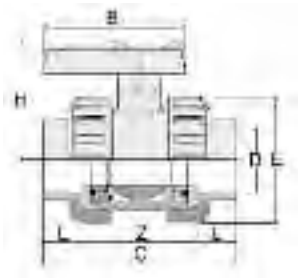

d	DN	PN	L	Z	C	E	H	B	gms	Code Plain	Code Threaded
1/2	15	10	17	47	81	50	50	57	95	H0 EVA 102	H0 EVA B02
3/4	20	10	19	51	95	59	55	66	156	H0 EVA 103	H0 EVA B03
1	25	10	22	61	105	68	66.5	75	228	H0 EVA 104	H0 EVA B04
1 1/4	32	10	31	84	146	96	93	103	540	H0 EVA 105	H0 EVA B05
1 1/2	40	10	31	84	146	96	93	103	540	H0 EVA 106	H0 EVA B06
2	50	10	38	96	172	116	107	121	844	H0 EVA 107	H0 EVA B07

UC Ball check valves Plain ends – EPDM seals (other options available)

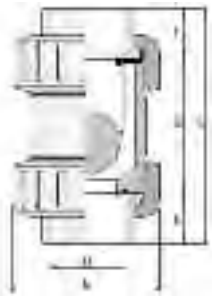

Size	L	Z	C	E	gms	Code
1/2	17	48	82	50	96	H0 UCA 102
3/4	19	55	93	59	99	H0 UCA 103
1	22	62	106	68	145	H0 UCA 104
1 1/4	26	75	127	80	234	H0 UCA 105
1 1/2	31	84	146	96	357	H0 UCA 106
2	38	99	175	116	937	H0 UCA 107

Options:
*EPDM seals (threaded ends) order H0 UCA B***
*FPM seals (plain ends) order H0 UCB****
*FPM seals (threaded ends) order H0 UCB B***

Note: this valve must be installed at a minimum distance of 10 x nominal diameter (eg. 20" for size 2") from pump flange.

UA Air release valves Plain ends – EPDM seals (other options available)

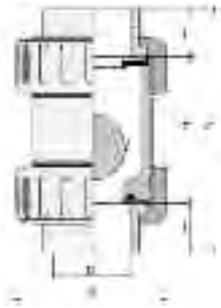

Size	L	Z	C	E	gms	Code
1/2	17	48	82	50	96	H0 UAA 102
3/4	19	55	93	59	99	H0 UAA 103
1	22	62	106	68	145	H0 UAA 104
1 1/4	26	75	127	80	234	H0 UAA 105
1 1/2	31	84	146	96	357	H0 UAA 106
2	38	99	175	116	937	H0 UAA 107

Options:
*EPDM seals (threaded ends) order H0 UAA B***
*FPM seals (plain ends) order H0 UAB****
*FPM seals (threaded ends) order H0 UAB B***

Tel: +44 (0)1543 279909 Fax: +44 (0)1543 279450

RV Y-Type strainers Plain ends – EPDM seals

d	DN	PN	A	B	E	L	Z	H	Fig.	gms	Code
		Grey	max								
1/2	15	15	125	72	55	16	103	135	A	162	H0 UVA 102
3/4	20	15	145	84	66	19	120	158	A	274	H0 UVA 103
1	25	15	165	95	75	22	132	176	A	403	H0 UVA 104
1 1/4	32	15	190	111	87	26	155	207	A	562	H0 UVA 105
1 1/2	40	15	210	120	100	31	181	243	A	839	H0 UVA 106
2	50	9	240	139	120	38	222	298	A	1413	H0 UVA 107

Options:

*EPDM seals (threaded ends) order H0 RVA B***
*FPM seals (plain ends) order H0 RVB****
*FPM seals (threaded ends) order H0 RVB B***

VM Diaphragm valves Manual – plain union ends – EPDM seals

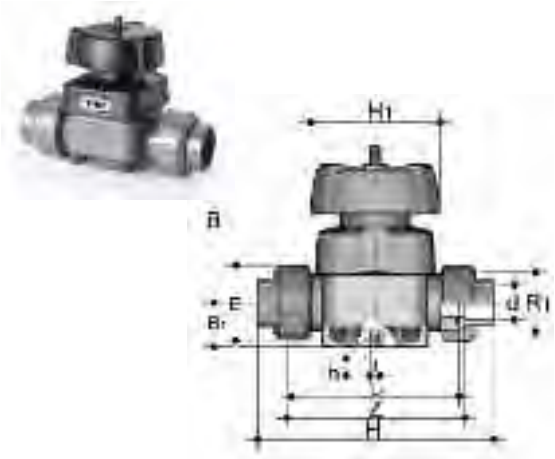

d	DN	PN	B	B_1	H	h	H_1	J	L	gms	Code
1/2	15	10	95	26	124	12	90	M6	16	700	H0 UMA 102
3/4	20	10	95	26	144	12	90	M6	19	700	H0 UMA 103
1	25	10	95	26	154	12	90	M6	23	700	H0 UMA 104
1 1/4	32	10	126	40	174	18	115	M8	27	1500	H0 UMA 105
1 1/2	40	10	126	40	194	18	115	M8	32	1500	H0 UMA 106
2	50	10	148	40	224	18	140	M8	39	2400	H0 UMA 107
* 2 1/2	65	10	225	55	284	23	215	M12	44	7000	H0 VMA 208
* 3	80	10	225	55	300	23	215	M12	51	7000	H0 VMA 209
* 4	100	10	295	69	350	23	250	M12	-	10500	H0 VMA 210

Options:

*FPM diaphragm order H0 VMB****
*PTFE diaphragm order H0 VMC****

Manual valves can be supplied with locking kits - further information is available from our Valve Department.

***Note**: 2 1/2", 3" and 4" are spigot ended.

PR Pressure relief valves EPDM seals

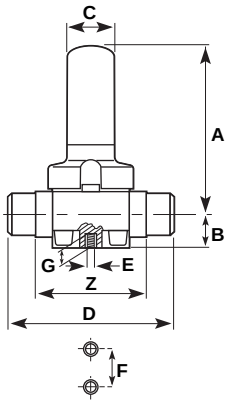

Size	PN	Z	A	B	C	D	E	F	G	gms	Code
½	10	92	143	20.5	35	124	M6	25	12	700	H0 PRA 202
¾	10	106	143	20.5	35	144	M6	25	12	700	H0 PRA 203
1	10	108	143	25.0	35	154	M6	25	12	700	H0 PRA 204
1¼	10	120	204	36.0	50	174	M8	44.5	16	1500	H0 PRA 205
1½	10	130	204	39.5	50	194	M8	44.5	16	1500	H0 PRA 206
2	10	146	219	49.0	50	224	M8	44.5	16	2400	H0 PRA 207

Options:
*FPM seals order H0 PRB****

FK Butterfly valves Glass reinforced polypropylene with ABS disc and EPDM seals

lever operated

Size	DN	PN	B_2	B_3	C	C_1	Z	gms	U	Code
1½	40	16	60	137	175	100	33	900	4	H0 FKA 106
2	50	16	70	143	175	100	43	1080	4	H0 FKA 107
2½	65	10	80	164	272	110	46	1470	4	H0 FKA 108
3	80	10	93	178	272	110	49	1870	8	H0 FKA 109
4	100	10	107	192	272	110	56	2220	8	H0 FKA 110
5	125	10	120	212	330	110	64	3100	8	H0 FKA 111
6	150	10	134	225	330	110	70	3850	8	H0 FKA 112
8	200	10	161	272	420	122	71	6750	8	H0 FKA 113

Options:
*FPM seals order H0 FKB****

U = *No. of holes*

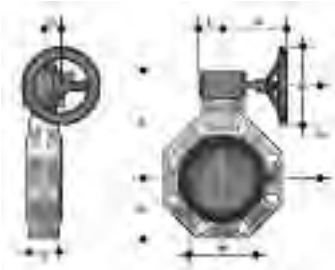

with gear box

Size	DN	PN	B_2	B_5	B_6	G	G_1	G_2	G_3	Z	gms	U	Code
2½	65	10	80	174	146	48	135	39	125	46	2400	4	HV FKA 108
3	80	10	93	188	160	48	135	39	125	49	2800	8	HV FKA 109
4	100	10	107	202	174	48	135	39	125	56	3150	8	HV FKA 110
5	125	10	120	222	194	48	144	39	200	64	4450	8	HV FKA 111
6	150	10	134	235	207	48	144	39	200	70	5200	8	HV FKA 112
8	200	10	161	287	256	65	204	60	200	71	9300	8	HV FKA 113
10	250	10	210	317	281	88	236	76	250	114	18600	12	HV FKA 114
12	300	8	245	374	338	88	236	76	250	114	25600	12	HV FKA 115

Options:
*FPM seals order HV FKB****

U = *No. of holes*

Note: *Lugged versions available to special order. Please refer to our Valve Department for further details.*

Valves can be supplied as electrically or pneumatically actuated. For further details contact our Valve department on 01543 272424.

Tel: +44 (0)1543 279909 Fax: +44 (0)1543 279450

Accessories

One-step solvent cement

Litres	gms	Code
0.5	550	03 461 395
1.0	1100	03 461 396

Only Durapipe ABS solvent cement and Durapipe Eco-cleaner should be used for jointing of Durapipe ABS pipework systems.

Eco-cleaner

Litres	gms	Code
0.5	500	03 457 395

Only Durapipe ABS solvent cement and Durapipe Eco-cleaner should be used for jointing of Durapipe ABS pipework systems.

Cobra pipe clips Polypropylene

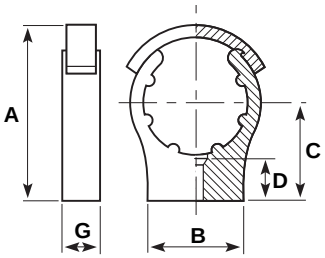

Size	A	B	C	D	G	Bolt/Screw size	gms	Code
3/8	–	35	25	19	16	M.4/3BA/No 8	7	13 434 305
1/2	–	35	30	14	16	M.5/1BA/No 10	8	13 434 306
3/4	–	35	35	16	17	M.5/1BA/No 10	11	13 434 307
1	–	40	40	17	17	M.5/1BA/No 10	14	13 434 308
1 1/4	75	45	45	20	20	M.5/1BA/No 10	21	13 434 309
1 1/2	85	50	50	22	21	M.6/0BA/No 10	30	13 434 310
2	102	60	60	19	21	M.6/0BA/No 10	42	13 434 311
2 1/2	122	70	70	27	31	M.8	94	13 434 312
3	148	80	90	39	31	M.8	121	13 434 313
4	171	90	96	36	35	M.8	185	13 434 314
5	211	156	132	40	40	M.8	252	13 434 316
6	243	170	150	40	40	M.8	330	13 434 317

Clips of size 1 1/4" and above are fitted with retaining strap.
Bolts/screws not supplied.

Saddle clips Polypropylene

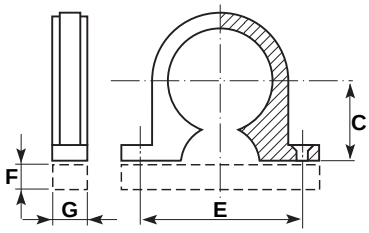

Size	C	E	F	G	Bolt/Screw size	gms	Code
3/8	13	37	–	14	M.4/3BA/No 8	3	03 455 101
1/2	18	41	–	14	M.4/3BA/No 8	4	03 455 102
3/4	21	45	–	16	M.5/2BA/No 10	6	03 455 103
1	23	56	–	16	M.5/2BA/No 10	7	03 455 104
1 1/4	29	65	–	16	M.5/2BA/No 10	11	03 455 105
1 1/2	34	67	–	16	M.5/2BA/No 10	12	03 455 106
2	38	87	–	22	M.6/0BA/No 12	25	03 455 107
3	50	122	8	34	M.10/3/8UNC	45	03 455 109
4	65	156	13	38	M.10/3/8UNC	70	03 455 110

Backing plate shown dotted supplied with 3" and 4" only.
Bolts/screws not supplied. Bolt holes in 3" and 4" clips are not countersunk.

Chamfering and de-burring tools

Description	Product code
3/8" to 1" pipe inner and outer milling cutter tool	FT 55 72 90
3/8" to 2" pipe inner and outer milling cutter tool	FT 55 65 12
3/4" to 6" chamfering tool	FT 55 05 10

Pipe cutters

Description	Product code
3/8" to 2" pipe cutter	FT 80 00 01
1 1/2" to 4" pipe cutter	FT 80 00 03
3/8" to 2" spare cutter wheel	FT 80 00 02
1 1/2" to 4" spare cutter wheel	FT 80 00 04

Valves

Premium Quality Valve for Demanding Environments

VKD Double union ball valves Manual – EPDM seals

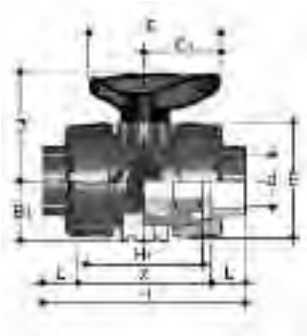

d	DN	PN	L	Z	H	E	B	C	Weight gms	Code
16	10	16	14	75	103	55	49	66	200	H0 DKA 305
20	15	16	16	71	103	55	49	66	195	H0 DKA 306
25	20	16	19	77	115	66	59	75	310	H0 DKA 307
32	25	16	22	84	128	75	66	85	440	H0 DKA 308
40	32	16	26	94	146	87	75	97	645	H0 DKA 309
50	40	16	31	102	164	100	87	110	880	H0 DKA 310
63	50	16	38	123	199	122	101	134	1490	H0 DKA 311

Options:

*FPM seals (plain ends) order H0 DKB ****

For threaded versions refer to Imperial Valves section.

Manual valves can be supplied with locking kits - further information is available from our Valve Department.

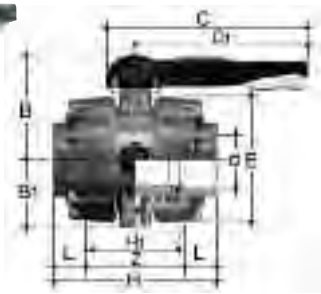

d	DN	PN	Z	L	H	H_1	E	B	B_1	C	C_1	gms	Code
75	65	16	147	44	235	133	164	164	87	225	175	4380	H0 DKA 312
90	80	16	168	51	270	149	203	177	105	327	272	7200	H0 DKA 313
110	100	16	186	61	308	167	238	195	129	385	330	11141	H0 DKA 314

Options:

*FPM seals (plain ends) order H0 DKB****

Premium Quality Valve for Demanding Environments

TKD 3-way ball valves Manual – EPDM seals

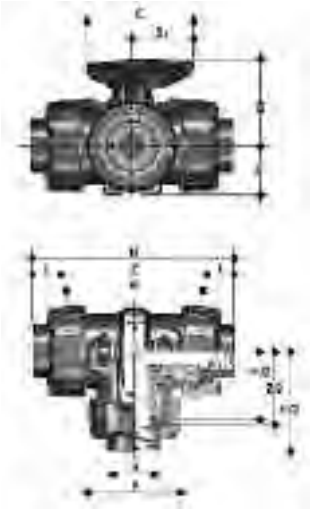

T port configuration

d	DN	PN	H	Z	C	C_1	B	B_1	gms	Code
20	15	16	118	86	67	40	54	29	310	H0 TTA 306
25	20	16	145	107	85	49	65	34.5	550	H0 TTA 307
32	25	16	160	116	85	49	65.9	39	790	H0 TTA 308
40	32	16	188.5	136.5	108	64	82.5	46	1275	H0 TTA 309
50	40	16	219	157	108	64	89	52	1660	H0 TTA 310
63	50	16	266.5	190.5	134	76	108	62	2800	H0 TTA 311

Options:

*FPM seals (plain ends) order H0 TTB****

*FPM seals (threaded ends) order H0 TTB****

Manual valves can be supplied with locking kits - further information is available from our Valve Department.

L port configuration

d	DN	PN	H	Z	C	C_1	B	B_1	gms	Code
20	15	16	118	86	67	40	54	29	310	H0 LTA 306
25	20	16	145	107	85	49	65	34.5	550	H0 LTA 307
32	25	16	160	116	85	49	65.9	39	790	H0 LTA 308
40	32	16	188.5	136.5	108	64	82.5	46	1275	H0 LTA 309
50	40	16	219	157	108	64	89	52	1660	H0 LTA 310
63	50	16	266.5	190.5	134	76	108	62	2800	H0 LTA 311

Options:

*FPM seals (plain ends) order H0 LTB****

VKD & TKD ball valves can be supplied electrically or pneumatically actuated.

EV Double union ball valves Manual – EPDM seals

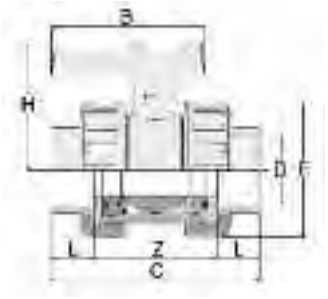

d	DN	PN	L	Z	C	E	H	B	Weight gms	Code
20	15	10	17	47	81	50	50	57	95	H0 EVA 306
25	20	10	19	51	95	59	55	66	156	H0 EVA 307
32	25	10	22	61	105	68	66.5	75	228	H0 EVA 308
40	32	10	31	84	146	96	93	103	540	H0 EVA 309
50	40	10	31	84	146	96	93	103	540	H0 EVA 310
63	50	10	38	96	172	116	107	121	844	H0 EVA 311

For threaded versions refer to Imperial Valves section.

UC Ball check valves EPDM seals

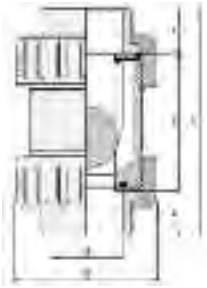

Size	L	Z	C	E	Weight gms	Code
20	17	48	82	50	96	H0 UCA 306
25	19	55	93	59	99	H0 UCA 307
32	22	62	106	68	145	H0 UCA 308
40	26	75	127	80	234	H0 UCA 309
50	31	84	146	96	357	H0 UCA 310
63	38	99	175	116	937	H0 UCA 311

Options:
*FPM seals (plain ends) order H0 UCB****
For threaded versions refer to Imperial Valves section.

Note: this valve must be installed at a minimum distance of 10 x nominal diameter (eg. 20" for size 63mm) from pump flange.

UA Air release valves EPDM seals

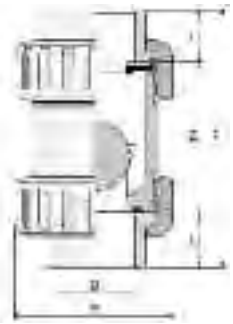

Size	L	Z	C	E	Weight gms	Code
20	17	48	82	50	96	H0 UAA 306
25	19	55	93	59	99	H0 UAA 307
32	22	62	106	68	145	H0 UAA 308
40	26	75	127	80	234	H0 UAA 309
50	31	84	146	96	357	H0 UAA 310
63	38	99	175	116	937	H0 UAA 311

Options:
*FPM seals (plain ends) order H0 UAB****
For threaded versions refer to Imperial Valves section.

Tel: +44 (0)1543 279909 Fax: +44 (0)1543 279450

RV Y-Type strainers Plain ends – EPDM seals

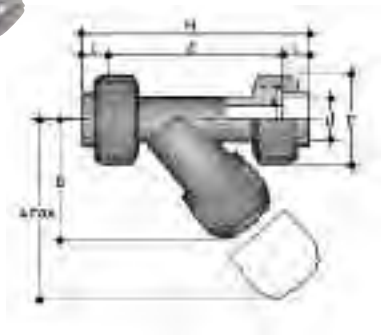

D	DN	PN Grey	A max	B	E	L	Z	H	Fig.	gms	Code
20	15	16	125	72	55	16	103	135	A	211	H0 UVA 306
25	20	16	145	84	66	19	120	158	A	358	H0 UVA 307
32	25	16	165	95	75	22	132	176	A	256	H0 UVA 308
40	32	16	190	111	87	26	155	207	A	733	H0 UVA 309
50	40	16	210	120	100	31	181	243	A	1095	H0 UVA 310
63	50	10	240	139	120	38	222	298	A	1843	H0 UVA 311

Options:

*FPM seals (plain ends) order H0 UVB ****

For threaded versions refer to Imperial Valves section.

VM Diaphragm valves Manual – plain union ends – EPDM seals

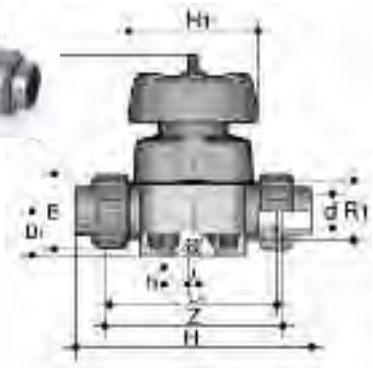

d	DN	PN	B	B_1	H	h	H_1	J	L	gms	Code
20	15	10	95	26	124	12	90	M6	16	700	H0 UMA 306
25	20	10	95	26	144	12	90	M6	19	700	H0 UMA 307
32	25	10	95	26	154	12	90	M6	23	700	H0 UMA 308
40	32	10	126	40	174	18	115	M8	27	1500	H0 UMA 309
50	40	10	126	40	194	18	115	M8	32	1500	H0 UMA 310
63	50	10	148	40	224	18	140	M8	39	2400	H0 UMA 311
* 75	65	10	225	55	284	23	215	M12	44	7000	H0 VMA 412
* 90	80	10	225	55	300	23	215	M12	51	7000	H0 VMA 413
* 110	100	10	295	69	350	23	250	M12	61	10500	H0 VMA 414

Options:

*FPM diaphragm order H0 VMB****

*PTFE diaphragm order H0 VMC****

Manual Valves can be supplied with locking kits - further information is available from our Valve Department.

***Note**: 75mm, 90mm and 110mm are spigot ended.

PR Pressure relief valves EPDM seals

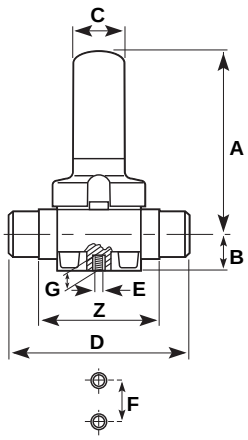

Size	PN	Z	A	B	C	D	E	F	G	gms	Code
20	10	92	143	20.5	35	124	M6	25	12	700	H0 PRA 406
25	10	106	143	20.5	35	144	M6	25	12	700	H0 PRA 407
32	10	108	143	25.0	35	154	M6	25	12	700	H0 PRA 408
40	10	120	204	36.0	50	174	M8	44.5	16	1500	H0 PRA 409
50	10	130	204	39.5	50	194	M8	44.5	16	1500	H0 PRA 410
63	10	146	219	49.0	50	224	M8	44.5	16	2400	H0 PRA 411

Options:

*FPM seals order H0 PRB****

FK Butterfly valves Glass reinforced polypropylene with ABS disc

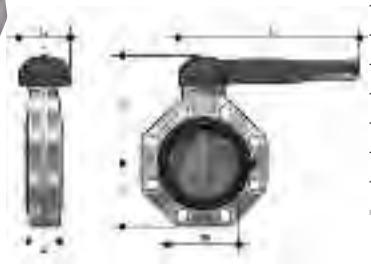

lever operated

d	DN	PN	B_2	B_3	C	C_1	gms	U	Z	Code
50	40	16	60	137	175	100	900	4	33	H0 FKA 106
63	50	16	70	143	175	100	1080	4	43	H0 FKA 107
75	65	10	80	164	272	110	1470	4	46	H0 FKA 108
90	80	10	93	178	272	110	1870	8	49	H0 FKA 109
110	100	10	107	192	272	110	2220	8	56	H0 FKA 110
140	125	10	120	212	330	110	3100	8	64	H0 FKA 111
160	150	10	134	225	330	110	3850	8	70	H0 FKA 112
225	200	10	161	272	420	122	6750	8	71	H0 FKA 113

Options:
*FPM seals order H0 FKB****

U = No. of holes

with gear box

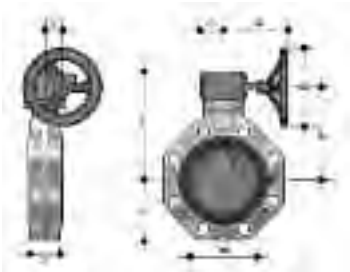

Size	DN	PN	B_2	B_5	B_6	G	G_1	G_2	G_3	gms	U	Z	Code
75	65	10	80	174	146	48	135	39	125	2400	4	46	HV FKA 108
90	80	10	93	188	160	48	135	39	125	2800	8	49	HV FKA 109
110	100	10	107	202	174	48	135	39	125	3150	8	56	HV FKA 110
140	125	10	120	222	194	48	144	39	200	4450	8	64	HV FKA 111
160	150	10	134	235	207	48	144	39	200	5200	8	70	HV FKA 112
225	200	10	161	287	256	65	204	60	200	9300	8	71	HV FKA 113
250	250	10	210	317	281	88	236	76	250	18600	12	114	HV FKA 114
315	300	8	245	374	338	88	236	76	250	25600	12	114	HV FKA 115

Options:
*FPM seals order HV FKB****

U = No. of holes

Note: *Lugged versions available to special order. Please refer to our Valve Department for further details.*

Valves can be supplied as electrically or pneumatically actuated.
Contact our Valve department on 01543 272424 for further information.

Tel: +44 (0)1543 279909 Fax: +44 (0)1543 279450

Accessories

Cobra pipe clips

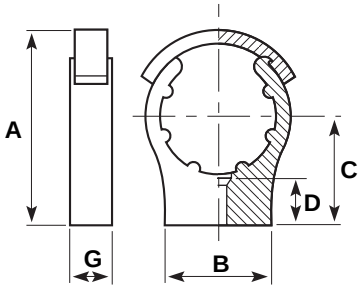

Size	A	B	C	D	G	Bolt/Screw	gms	Code
*12	–	24	25	15	16	M4/3BA/No 8	5	13 434 304
*16	–	35	25	17	16	M4/3BA/No 8	7	13 434 305
*20	–	35	30	14	16	M5/1BA/No 10	8	13 434 306
*25	–	35	35	16	17	M5/1BA/No 10	11	13 434 307
32	65	45	40	17	17	M5/1BA/No 10	14	13 434 308
40	75	45	45	20	20	M5/1BA/No 10	21	13 434 309
50	85	50	50	22	21	M6/0BA/No 10	30	13 434 310
63	102	60	60	19	21	M6/0BA/No 10	42	13 434 311
75	122	70	70	27	31	M8	94	13 434 312
90	148	80	90	39	31	M8	121	13 434 313
110	171	90	96	36	35	M8	184	13 434 314
125	204	144	132	40	40	M8	237	13 434 315
140	211	156	132	40	40	M8	252	13 434 316
160	243	170	150	40	40	M8	330	13 434 317

**Without retaining clips. Bolts/screws not supplied.*

Rubber lined pipe clips

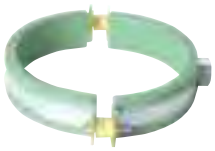

Size mm	Thread	Code
16	M10	FT PC 1600
20	M10	FT PC 2000
25	M10	FT PC 2500
32	M10	FT PC 3200
40	M10	FT PC 4000
50	M10	FT PC 5000
63	M10	FT PC 6300
75	M10	FT PC 7500
90	M10	FT PC 9000
110	M10	FT PC 1100
160	M10	FT PC 1601

One-step solvent cement

Litres	gms	Code
0.5	550	03 461 395
1.0	1100	03 461 396

Only Durapipe ABS solvent cement and Durapipe Eco-cleaner should be used for jointing of Durapipe ABS pipework systems.

Eco-cleaner

Litres	gms	Code
0.5	500	03 457 395

Only Durapipe ABS solvent cement and Durapipe Eco-cleaner should be used for jointing of Durapipe ABS pipework systems.

Pipe trays

Pipe dia mm	Standard length in metres	Standard pack quantity in metres	Product code
16	2	50	FT 635 216
20	2	50	FT 635 220
25	2	50	FT 635 225
32	2	50	FT 635 232

Chamfering and de-burring tools

Description	Product code
E 16-25mm pipe inner and outer milling cutter tool	FT 55 72 90
E 16-63mm pipe inner and outer milling cutter tool	FT 55 65 12
32-160mm chamfering tool	FT 55 05 10

Pipe cutters

Description	Product code
16-63mm pipe cutter	FT 80 00 01
50-125mm pipe cutter	FT 80 00 03
16-63mm spare cutter wheel	FT 80 00 02
50-125mm spare cutter wheel	FT 80 00 04

Tel: +44 (0)1543 279909 Fax: +44 (0)1543 279450

DURAPIPE UK CONDITIONS OF SALE

1. DEFINITIONS:
'Seller' shall mean Glynwed Pipe Systems Limited, registered in England under number 1698059. 'Buyer' shall mean any company, organisation or individual to whom a quotation is offered, or whose order is accepted by the Seller.

2. CONDITIONS:
All offers, quotations, estimates, acceptances and contracts are subject to these Conditions of Business and any terms or conditions which any other person shall seek to impose or make part of any contract shall, so far as is inconsistent with these Conditions of Business, not apply unless expressly agreed by the Seller in writing. The headings in these conditions are for convenience only and shall not affect their interpretation.

3. QUOTATIONS AND PRICE VARIATION:
a) Any quotation given by the Seller is an invitation to the Buyer to make an offer only and no order of the Buyer placed with the Seller in pursuance of a quotation or otherwise shall be binding on the Seller unless and until it is accepted in writing by the Seller.

b) Unless stated otherwise, all quotations and published price lists are ex works, exclusive of VAT and shall remain valid for 30 days or such a period as may be quoted but nevertheless the Seller may amend or withdraw any quotation by written or oral notice. Quotations may be varied if the Buyer makes variations in his specifications.

4. STATEMENTS OR REPRESENTATIONS TO THE BUYER:
If any statement or representation has been made to the Buyer upon which the Buyer relies other than in the documents enclosed with the Seller's quotation, the Buyer must set out that statement or representation in a document to be attached to or endorsed on the order in which case the Seller may submit a new quotation.

5. DELIVERY - TIME:
a) Any period for delivery given at any time and in any manner by the Seller is an estimate only and is not binding on the Seller. Delivery periods are normally calculated from the later of:

i) acceptance of order; or

ii) where applicable, the receipt by the Seller of a detailed specification or drawings.

b) Time shall not be deemed to be of the essence of the contract. Failure by the Seller to meet any quoted delivery period for any part or the whole of the order shall not entitle the Buyer to rescind the contract or to claim damages of any nature.

c) The Seller will endeavour to comply with reasonable requests by the Buyer for postponement of delivery but shall be under no obligation to do so. Where delivery is postponed otherwise than due to default by the Seller the Buyer shall pay all costs and expenses including a reasonable charge for storage and transportation occasioned thereby and an extra charge for split delivery if applicable.

d) The Buyer will receive delivery of any consignment between the hours of 8.00am and 4.00pm Monday to Friday inclusive, unless otherwise agreed in writing. Cost incurred by the Seller arising from the Buyer's refusal to accept consignments within the agreed hours shall be borne by the Buyer.

6. DELIVERY AND RISK:
a) Except where stated to the contrary in the contract, delivery shall be made as follows:

i) where the Buyer provides the transport, delivery shall be made ex the Seller's works;

ii) where the Seller provides the transport, delivery shall be made to the premises of the Buyer, or the premises of the Buyer's customer or works site if the Buyer has requested delivery to be so made but where the Buyer has made such a request the Seller will make a first delivery to the Buyer's customer or works site as so much of the goods as is available for that delivery but subsequent deliveries will be made to the premises of the Buyer.

b) The Seller may at its discretion make partial delivery of orders and invoice the same.

c) Risk in the goods shall pass on delivery.

d) Where goods are sent FOB the Seller's responsibility shall cease when the goods are placed on board ship or aircraft without the need for the Seller to give notice to the Buyer and the provisions of Section 32(3) of the Sale of Goods Act 1979 shall not apply.

7. OWNERSHIP OF GOODS:
a) The goods shall remain the sole and absolute property of the Seller as legal and equitable owner until such time as the Buyer shall have paid to the Seller the contract price together with the full price of any other goods the subject of any contract between the Seller and the Buyer.

b) The Buyer acknowledges that until such time as the property in the goods passes to the Buyer he is in possession of the goods as a bailee and fiduciary agent for the Seller and the Purchaser shall store the goods in such a manner that they are clearly identifiable as the property of the Seller.

c) Until payment due under all contracts between the Buyer and the Seller had been made in full, in the event of sale of the goods by the Buyer:

i) the Seller shall be entitled to trace all proceeds of sale received by the Buyer through any bank or other account maintained by the Buyer; and

ii) the Buyer shall if requested by the Seller in writing to so assign its rights to recover the selling price of the goods from the third parties concerned. Such monies to be held separately by the Buyer as agent on behalf of the Seller.

d) The Seller may for the purpose of recovery of its goods enter upon any premises where they are stored or where they are reasonably thought to be stored and may repossess the same.

8. TERMS OF PAYMENT:
In the event of default in payment according to the agreed payment terms between the Seller and the Buyer – ie: by the end of the month following the month of despatch of the goods the Seller shall be entitled without prejudice to any other right or remedy to suspend all further deliveries and to charge interest on any amount outstanding at the rate of 2% per month until payment in full is made (a part of a month being treated as a full month for the purpose of calculating interest).

9. SHORTAGES AND DEFECTS APPARENT ON DELIVERY:
a) It shall be the responsibility of the Buyer to inspect or arrange for an inspection of the goods on delivery whether the goods are delivered to the Buyer's premises or to the premises of the Buyer's customer or to a works site. If no such inspection is made the Buyer shall be deemed to have accepted the goods.

b) The Buyer shall have no claim for shortages or defects apparent on inspection unless:

i) a written complaint is made to the Seller within three days of receipt of the goods specifying the shortage or defect; and

ii) the Seller is within seven days of receipt of the complaint given an opportunity to inspect the goods and investigate the complaint before any use is made of the goods.

c) If a complaint is not made to the Seller as herein provided then in respect of such shortages or defects the goods shall be deemed to be in all respects in accordance with the contract and the Buyer shall be bound to pay for the same accordingly.

10. CLAIMS FOR DEFECTS NOT APPARENT ON INSPECTION:
a) The Buyer shall have no claim for defects not apparent on inspection unless the Seller is notified of defective workmanship or materials within twelve months from delivery of the goods. Provided that the goods have been installed and applied in accordance with any relevant recommendations made by the Seller, the Seller will at its option replace the goods or refund the net invoiced price in respect of the goods which have been shown to be defective. If the Seller does so supply substitute goods the Buyer shall be bound to accept such substituted goods in full satisfaction of the obligations of the Seller under the contract.

b) The Buyer shall in any event have no claim or set-off in respect of defects unless a written complaint is sent to the Seller as soon as the defect is noticed and no use is made of the goods thereafter or alteration made thereto by the Buyer before the Seller is given an opportunity to inspect the goods.

c) The Buyer is responsible for ensuring that the goods are fit for any particular purpose, and no warranty or condition of fitness for any particular purpose is to be implied into the contract.

11. LIABILITY:
Save as stated in Conditions 9 and 10 (and save in respect of death or personal injury resulting from the negligence of the Seller its servants or agents) the Seller shall not be liable for any claim or claims for direct or indirect consequential or incidental injury loss or damage made by the Buyer against the Seller whether in contract or in tort (including negligence on the part of the Seller its servants or agents) arising out of or in connection with any defect in the goods or their fitness or otherwise for any particular purpose or any act omission neglect or default of the Seller its servants or agents in the performance of the contract.

12. FORCE MAJEURE:
Notwithstanding anything herein contained neither the Buyer nor the Seller is to be held liable for any delay or failure to carry out the contract due wholly or in part to an act of God action by any Government whether British or foreign civil war strikes and/or lockouts wheresoever occurring fire trade disputes floods or unfavourable weather or any material becoming unavailable or irreplaceable (whether at all or at commercially acceptable prices) or any other circumstances beyond the control of the Seller.

13. SUB-CONTRACTING:
The Seller reserves the right to sub-contract the fulfilment of any order or any part thereof.

14. INSOLVENCY AND BREACH OF CONTRACT:
In the event that:

a) the Buyer commits any breach of the contract and fails to remedy such breach (if capable of remedy) within a period of thirty days from receipt of a notice in writing from the Seller requesting such remedy; or

b) any distress or execution is levied upon any of the goods or property of the Buyer; or

c) the Buyer offers to make any arrangements with or for the benefit of its creditors or (if an individual) becomes subject to a petition for a bankruptcy order or (being a limited company) has a receiver appointed of the whole or any part of its undertaking property or assets; or

d) an order is made or a resolution is passed or analogous proceedings are taken for the winding up of the Buyer (save for the purpose of reconstruction or amalgamation with insolvency and previously approved in writing by the Seller) the Seller shall thereupon be entitled without prejudice to its other rights hereunder forthwith to suspend all further deliveries until the default has been made good or to determine the contract and any unfulfilled part thereof or at the Seller's option to make partial deliveries. Notwithstanding any such termination the Buyer shall pay to the Seller at the contract rate for all the goods delivered up to and including the date of termination.

15. INDUSTRIAL PROPERTY RIGHTS:
If goods supplied by the Seller to the Buyer's design or specifications infringe or are alleged to infringe any patent or registered design right or copyright the Buyer will indemnify the Seller against all damages, costs and expenses incurred by the Seller as a result of the infringement or allegation. The Buyer will give the Seller all possible help in meeting any infringement claim brought against the Seller.

16. BUYER'S ERROR IN ORDERING:
In the event the Buyer orders incorrectly the Seller will be under no obligation to the Buyer to rectify or assist in rectifying the error.

17. LAW AND JURISDICTION:
The contract shall be subject in all respects to English Law and to the jurisdiction of the English Courts.

Tel: +44 (0)1543 279909 Fax: +44 (0)1543 279450

Durapipe UK reserves the right to modify the details in this publication as products and specifications are updated and improved.
The content of this publication is for general information only and it is the user's responsibility to determine the suitability of any product for the purpose intended.

For further information on all Durapipe UK products and services contact our Customer Services Department as detailed below.

Customer Services
Tel: 01543 273100
Fax: 0800 317875

Durapipe UK is a trade name of Glynwed Pipe Systems Ltd. Company Number 1698059.

Registered office:

Durapipe UK
Walsall Road
Norton Canes
Cannock
Staffordshire
WS11 9NS
United Kingdom
Tel: +44 (0)1543 279909
Fax: +44 (0)1543 279450
email: enquiries@durapipe.co.uk
web: www.durapipe.co.uk

Distributor

04900020 March 2010

an Aliaxis company

INSTALLATION INSTRUCTIONS

1. Cut Pipe

Pipe must be cut clean and square. Suitable wheel cutter will eliminate swarf. If saw is used care must be taken to ensure swarf does not enter system.

2. Chamfer the end of the Pipe

Chamfer the end of the pipe using a coarse file or chamfering tool. Chamfer should be approx. 45 degrees by 3 to 5mm.

3. Witness Mark the Pipe

Mark the pipe a known distance from end of pipe and clear area to be cleaned. This mark should be used as a witness mark to ensure pipe has been fully inserted.

4. Clean the Pipe Surfaces

Ensure joint surfaces are clean and free from moisture. Clean surfaces with Durapipe Eco-cleaner using lint free cloth/ paper towel.

5. Apply Cement

Using a clean brush apply Durapipe ABS solvent cement to the pipe and fitting. It is important to apply Durapipe ABS solvent cement quickly to ensure excessive force is not required to make joint. Size of brush should be approx half size of pipe to be joined.

6. Insert Pipe

Immediately after applying Durapipe ABS solvent cement insert pipe fully into fitting – do not twist. Hold the pipe and fitting together for about 10 seconds. Application of the correct amount of Durapipe ABS solvent cement should result in a neat bead of cement around the fitting edge.

7. Wipe off Excess Cement

Wipe off excess cement from outside of joint. Excessive deposits inside the fitting should also be avoided as this can weaken the wall of fitting.

8. Check Insertion Depth

Using mark previously made check that pipe has been fully inserted. Do not disturb joint for at least 10 minutes.

Ph: 1800 755 899
Fax: 1800 244 688
www.philmac.com.au

Durapipe

Philmac®

The connection you can trust.

SECTION 22 11 16

1-1/4" Pex-A

SharkBite® PEX Pipe without Oxygen Barrier

DESCRIPTION

SharkBite® PEX Pipe is a cross-linked polyethylene pipe used for potable water application. The pipe is printed with a SharkBite imprint pattern that provides a visual aid to determine if the pipe has been inserted all the way into the SharkBite® Push-To-Connect (PTC) fitting. This feature only works if the pipe is cut between the SharkBite imprint pattern.

FEATURES AND BENEFITS

Pipe printed with SharkBite imprint pattern:
Allows for easy assembly with SharkBite PTC fittings without use of elaborate and costly tools.

SharkBite pipe:
Strong, flexible, resilient pipe that provides superior temperature performance.

Complete connection system:
System provides a wide selection of fittings and pipe to ensure a trouble-free rough-in.

Listed to NSF 14 and CSA B137.5 for use in potable water systems:
Inspector friendly, peace of mind!

Manufactured and tested to meet or exceed the requirements of the ASTM F-876, ASTM F-877 and CSA B137.5:
Specify and install with confidence!

Variety of connections options, SharkBite PEX can be connected with SharkBite PTC fittings, or Cash Acme® barbed fittings:
Flexible installation options.

SPECIFICATION

System shall be plumbed using SharkBite Pipe cross-linked polyethylene pipe and all joints shall be made using SharkBite PTC fittings or brass Cash Acme® barbed fittings with clamps. Pipe and fittings shall be installed as outlined in the SharkBite PEX installation manual.

SPECIFICATION DATA

Performance:
Maximum Working Pressure:
160 psi @ 73.4°F (23°C)
100 psi @ 180°F (82°C)
80 psi @ 200° F (93°C)

Materials:
Pipe . . . . . PEX-B cross-linked polyethylene

CERTIFICATIONS

The SharkBite Pipe is approved for use in all model codes in the US and Canada for use in hydronic and potable water systems and is certified to the following standards: NSF/ANSI 61, NSF/ANSI 14, CSA B137.5, ASTM F-876/877, AWWA C904.

www.sharkbite.com · 2727 Paces Ferry Road · Building 2 · Suite 1800 · Atlanta · Georgia 30339 · USA
US Contact: 1-877-700-4242 · customerservice@sharkbite.com · Canadian Contact: 1-888-820-0120 · canadasales@rwc.com

SharkBite® PEX Pipe without Oxygen Barrier

SPECIFICATION DATA

Model	Nominal Tubing Size				Length		Bend Radius		Fluid Capacity Per 100'		Package Weight	
	ID		OD									
	in	mm	in	mm	ft	M	in	mm	gal	ltrs	lbs	kgs
Natural PEX w/Black Text (Coil)												
U855N100	3/8"	10	1/2"	15	100	30.48	4	102	0.53	2.01	4.5	2.0
U855N300	3/8"	10	1/2"	15	300	91.44	4	102	0.53	2.01	13.5	6
U855N500	3/8"	10	1/2"	15	500	152.40	4	102	0.53	2.01	23	10.4
Natural PEX w/Red Text (Coil)												
U855NR100	3/8"	10	1/2"	15	100	30.48	4	102	0.53	2.01	4.5	2.0
U855NR300	3/8"	10	1/2"	15	300	91.44	4	102	0.53	2.01	13.5	6
U855NR500	3/8"	10	1/2"	15	500	152.40	4	102	0.53	2.01	23	10.4
Blue PEX (Coil)												
U860B100	1/2"	13	5/8"	16	100	30.48	5	127	0.96	3.63	5.5	2.5
U860B300	1/2"	13	5/8"	16	300	91.44	5	127	0.96	3.63	14.5	6.6
U860B500	1/2"	13	5/8"	16	500	152.40	5	127	0.96	3.63	24	10.9
U870B100	3/4"	19	7/8"	22	100	30.48	7	178	1.9	7.19	10.5	4.8
U870B300	3/4"	19	7/8"	22	300	91.44	7	178	1.9	7.19	31.5	14.4
U870B500	3/4"	19	7/8"	22	500	152.40	7	178	1.9	7.19	45	20.4
U880B100	1"	25	1-1/8"	29	100	30.48	10	254	3.1	11.73	18	8.2
U880B300	1"	25	1-1/8"	29	300	91.44	10	254	3.1	11.73	54	24.6
U880B500	1"	25	1-1/8"	29	500	152.40	10	254	3.1	11.73	90	40.8
Red PEX (Coil)												
U860R100	1/2"	13	5/8"	16	100	30.48	5	127	0.96	3.63	5.5	2.5
U860R300	1/2"	13	5/8"	16	300	91.44	5	127	0.96	3.63	14.5	6.6
U860R500	1/2"	13	5/8"	16	500	152.40	5	127	0.96	3.63	24	10.9
U870R100	3/4"	19	7/8"	22	100	30.48	7	178	1.9	7.19	10.5	4.8
U870R300	3/4"	19	7/8"	22	300	91.44	7	178	1.9	7.19	31.5	14.4
U870R500	3/4"	19	7/8"	22	500	152.40	7	178	1.9	7.19	45	20.4
U880R100	1"	25	1-1/8"	29	100	30.48	10	254	3.1	11.73	18	8.2
U880R300	1"	25	1-1/8"	29	300	91.44	10	254	3.1	11.73	54	24.6
U880R500	1"	25	1-1/8"	29	500	152.40	10	254	3.1	11.73	90	40.8
White PEX (Coil)												
U860W100	1/2"	13	5/8"	16	100	30.48	5	127	0.96	3.63	5.5	2.5
U860W300	1/2"	13	5/8"	16	300	91.44	5	127	0.96	3.63	14.5	6.6
U860W500	1/2"	13	5/8"	16	500	152.40	5	127	0.96	3.63	24	10.9
U870W100	3/4"	19	7/8"	22	100	30.48	7	178	1.9	7.19	10.5	4.8
U870W300	3/4"	19	7/8"	22	300	91.44	7	178	1.9	7.19	31.5	14.4
U870W500	3/4"	19	7/8"	22	500	152.40	7	178	1.9	7.19	45	20.4
U880W100	1"	25	1-1/8"	29	100	30.48	10	254	3.1	11.73	18	8.2
U880W300	1"	25	1-1/8"	29	300	91.44	10	254	3.1	11.73	54	24.6
U880W500	1"	25	1-1/8"	29	500	152.40	10	254	3.1	11.73	90	40.8
Blue PEX (Straight Lengths)												
U860B5	1/2"	13	5/8"	16	5'	1.52	5	127	0.96	3.63	3.00	1.4
U860B10	1/2"	13	5/8"	16	10'	3.04	5	127	0.96	3.63	6.00	2.7
U860B20	1/2"	13	5/8"	16	20'	6.09	5	127	0.96	3.63	12.0	5.5
U870B5	3/4"	19	7/8"	22	5'	1.52	7	178	1.9	7.19	5.25	2.5
U870B10	3/4"	19	7/8"	22	10'	3.04	7	178	1.9	7.19	10.5	4.8
U870B20	3/4"	19	7/8"	22	20'	6.09	7	178	1.9	7.19	21	9.5
U880B5	1"	25	1-1/8"	29	5'	1.52	10	254	3.1	11.73	TBD	TBD
U880B10	1"	25	1-1/8"	29	10'	3.04	10	254	3.1	11.73	TBD	TBD
U880B20	1"	25	1-1/8"	29	20'	6.09	10	254	3.1	11.73	TBD	TBD
Red PEX (Straight Lengths)												
U860R5	1/2"	13	5/8"	16	5'	1.52	5	127	0.96	3.63	3.00	1.4
U860B10	1/2"	13	5/8"	16	10'	3.04	5	127	0.96	3.63	6.00	2.7
U860B20	1/2"	13	5/8"	16	20'	6.09	5	127	0.96	3.63	12.0	5.5
U870B5	3/4"	19	7/8"	22	5'	1.52	7	178	1.9	7.19	5.25	2.5
U870B10	3/4"	19	7/8"	22	10'	3.04	7	178	1.9	7.19	10.5	4.8
U870B20	3/4"	19	7/8"	22	20'	6.09	7	178	1.9	7.19	21	9.5
U880B5	1"	25	1-1/8"	29	5'	1.52	10	254	3.1	11.73	TBD	TBD
U880B10	1"	25	1-1/8"	29	10'	3.04	10	254	3.1	11.73	TBD	TBD
U880B20	1"	25	1-1/8"	29	20'	6.09	10	254	3.1	11.73	TBD	TBD
White PEX (Straight Lengths)												
U860R5	1/2"	13	5/8"	16	5'	1.52	5	127	0.96	3.63	3.00	1.4
U860W10	1/2"	13	5/8"	16	10'	3.04	5	127	0.96	3.63	6.00	2.7
U860W20	1/2"	13	5/8"	16	20'	6.09	5	127	0.96	3.63	12.0	5.5
U870W5	3/4"	19	7/8"	22	5'	1.52	7	178	1.9	7.19	5.25	2.5
U870W10	3/4"	19	7/8"	22	10'	3.04	7	178	1.9	7.19	10.5	4.8
U870W20	3/4"	19	7/8"	22	20'	6.09	7	178	1.9	7.19	21	9.5
U880W5	1"	25	1-1/8"	29	5'	1.52	10	254	3.1	11.73	TBD	TBD
U880W10	1"	25	1-1/8"	29	10'	3.04	10	254	3.1	11.73	TBD	TBD
U880W20	1"	25	1-1/8"	29	20'	6.09	10	254	3.1	11.73	TBD	TBD

SHARKBITE®

PEX INSTALLATION INSTRUCTIONS

Table of Contents

Introduction.....3

Features and Benefits of SharkBite® Tubing
Features and Benefits of SharkBite® push-fittings
Features and Benefits of Clamp/Barb Systems

Types of Plumbing Systems.....4

Truck and Brand Systems
Manifold Systems
Combination Systems
Home-Run Systems

Making a SharkBite® Push Fitting Connection.....5

Connection with SharkBite® PEX

Making a SharkBite® Clamp/Barb Fitting Connection.....6

Connection with Clamp System
Calibration of Clamp Tool
Removing a Clamp
Connection with Crimp System

Dos and Don'ts for SharkBite® PEX Tubing.....9

Cross Linking Methods.....10

Installation Tips.....10

Proper Support
Concrete Installation

Technical Data.....10

SharkBite® PEX Tubing Marking Certifications.....11
Maximum Working Pressure
Thermal Expansion
Tubing Dimensions, Bend Radius and Fluid Capacity
Pressure Loss Data

Policies and Warranty.....12

Combine SharkBite® fittings, manifolds and valves with SharkBite® PEX for the only Total Rough-In Solution™ Connection System – and (using push-fittings) the fastest way to plumb any residential or commerical project. Ask for the complete product line brochure or learn more at www.sharkbite.com

A Division of the Reliance Worldwide Corporation

Introduction

The purpose of this guide is to familiarize plumbing professionals with the SharkBite® Connection System, and the recommended method of installing SharkBite® PEX tubing. SharkBite® PEX tubing can be used with SharkBite® push-fittings, SharkBite® barbed fittings, SharkBite® manifolds, and SharkBite® valves.

SharkBite® PEX is an excellent tubing product for plumbing, radiant and hydronic systems, offering many advantages over traditional rigid pipe. The combination of SharkBite® push-fit fittings, manifolds, valves and PEX tubing is the **FASTEST** way to plumb any residential or commercial project. If **COST** of **MATERIAL** takes priority, SharkBite® barb fittings may be used with clamp or crimp rings. In addition, a variety of valves and manifolds with SharkBite barb connectors are included in the SharkBite® Connection System line, making it the only Total Rough-In Solution™.

{Features and Benefits of Sharkbite® PEX Tubing}

Flexible:
- **Easy to install and service.**

Quieter:
- **Minimizes noise caused by water hammer.**

Resists corrosion and scale buildup:
- **Improves the performance of the plumbing system.**

Fewer fittings required:
- **Reduces total installation cost.**

Fewer joints:
- **Reduces the chances of call backs.**

Pressure test immediately:
- **No waiting for glue to dry or joints to cool.**

{Features and Benefits of Sharkbite® Push-Fittings}

Instant push-fit connection for increased ease-of-use:
- **No soldering, clamps, unions or glue required.**

Fittings certified to 200 PSI and 200˚F (93˚C):
- **Proven durability and quality.**

Fits copper tubing, CTS CPVC and PEX:
- **Connects all three types in any combination.**

Integral tube liner for PEX installations:
- **Integrated design means no loose components, ensures secure, reliable connection.**

Design certified and agency listed:
- **Inspector friendly, peace of mind!**

Compact, robust DZR brass body:
- **Foundation of a strong, corrosion resistant, durable fitting.**

Design certified to ANSI/NSF-61 and ASSE 1061 product standard for use in potable water and hydronic heating water distribution:
- **Quality engineered and manufactured.**

Approved to be used underground and behind walls without access panels. Designed for radiant and hydronic heating as well as potable water distribution.

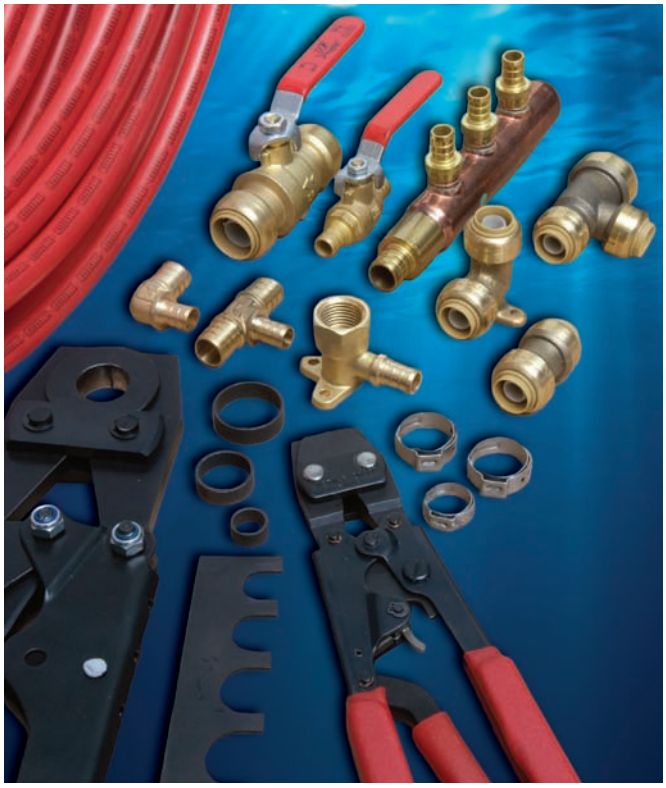

{Features and Benefits of Sharkbite® Barb Fittings}

Broad line of fittings and manifolds:
- **A typical barb system offers the lowest material cost.**

{Features and Benefits of Sharkbite® Valves}

Line includes ball, regulator, and thermostatic mixing valves:
- **Push-fit (integral & union type) or barb connectors.**

{Features and Benefits of Sharkbite® PEX Tools}

Clamp Ring Tool (one clamping tool for all size clamp rings):
- **Reduced equipment cost and saves installation time.**
- **One hand operation (leaves a hand free to position the clamp ring).**

Crimp Ring System (Heavy-duty components with adjustment tools and case):
- **Includes 5 interchangable jaws and go/no-go gauge.**

Plumbing Systems

The **SharkBite® Connection System** offers the only Total Rough-in Solution™, including a full line of valves, push-fittings, PEX tubing and traditional PEX components and tools. The SharkBite® system offers three options for a PEX tubing installation – Trunk & Branch, Manifold,or a Combination system – as described in the diagrams below.

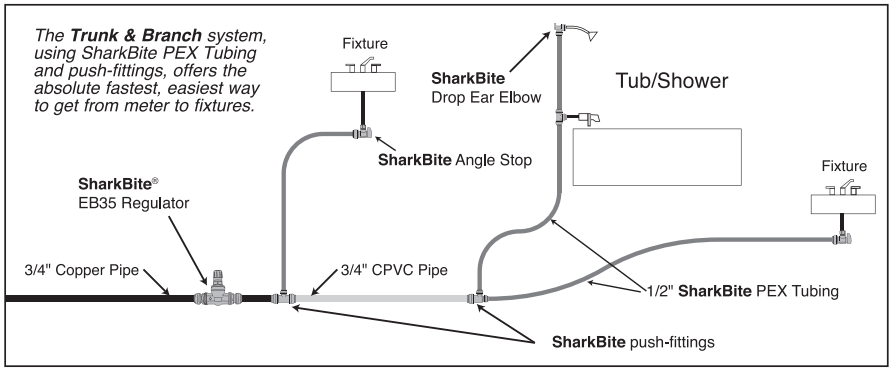

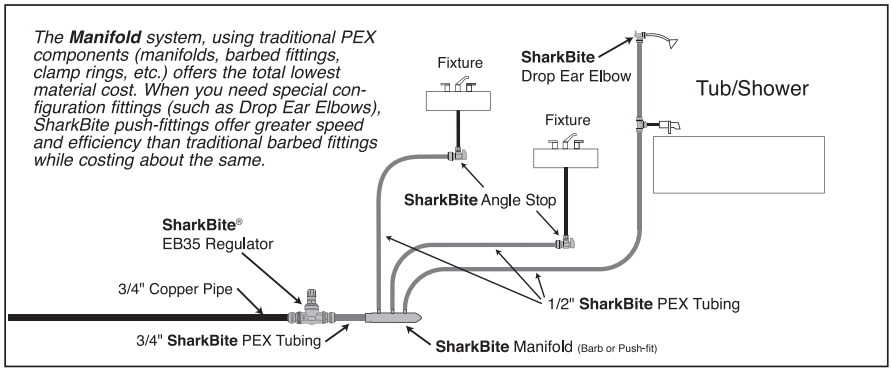

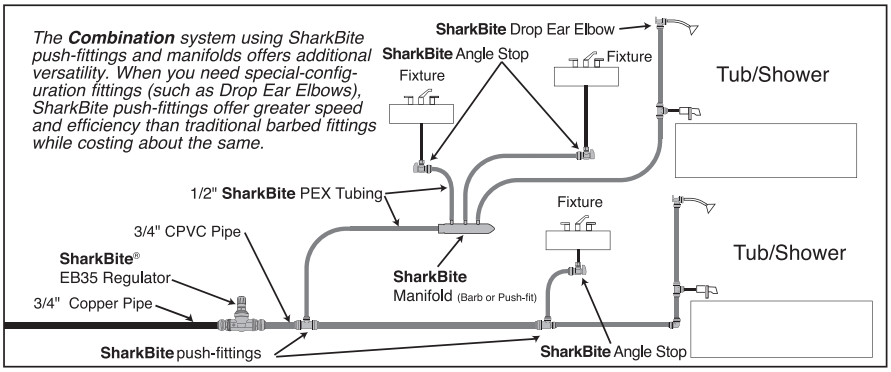

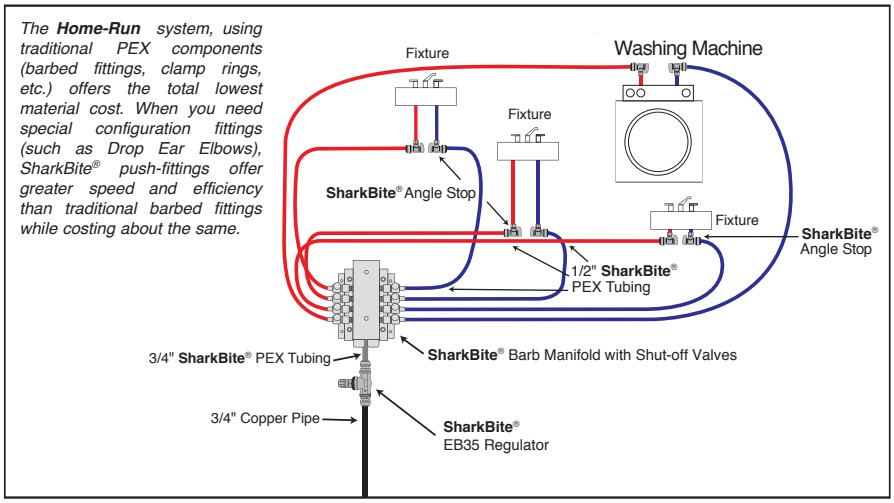

Making a SharkBite® Push-Fitting Connection

The combination of **SharkBite®** push-fittings and PEX tubing offers the fastest, easiest installation from meter to fixture.

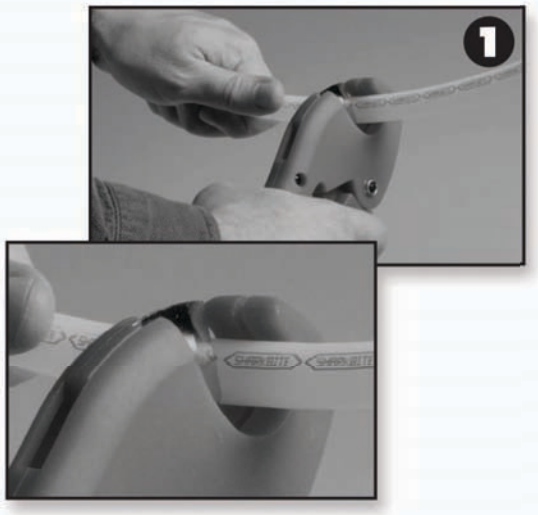

Step 1. Use plastic tubing cutters to cut the tubing between the pointed ends of the repeating 1" SharkBite® imprint pattern. The pattern provides a visual aid to determine if the tube has been inserted all the way into the fitting. Ensure the tube is cut square. A square cut end allows the tubing to be inserted all the way into the fitting. Ensure the tube has no rough edges, cuts or abrasions (rough edges, cuts or abrasions may damage the O-ring and cause the fitting to leak).

Step 2. SharkBite® push-fittings come with integral tube support liners. Ensure that the support liner is in place. The liner reinforces the wall of the PEX tubing to help prevent collapse of the tubing wall.

Step 3. Insert the tube into the fitting until the tube reaches the tube stop. Make sure the pointed end of the SharkBite® pattern is even with the end of the release collar. Only when the tube reaches the tube stop has a secure joint been created.

Note: *Install SharkBite® push-fittings at least 1" apart to enable disassembly of the joint.*

Making a SharkBite® Clamp/Barb Connection

The use of traditional PEX components (manifolds, barbed fittings, clamp or crimp rings, etc.) offers the total lowest material cost.

Step 1. Use plastic tubing cutters to cut the tubing to length, making sure that you have a good square cut. A rough or uneven cut will result in a weakened joint.

Step 2. Slide the correct size clamp ring over the tube and approximately 2” past the end of the tubing.

Step 3. Push the tubing onto the barbed fitting until it touches the fitting shoulder. Position the clamp ring 1/8”-1/4” from the end of the tube. This distance ensures that the clamp ring is positioned directly over the barbs on the fitting.

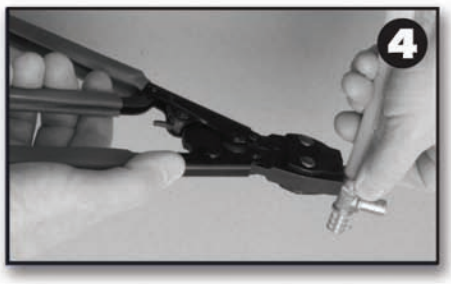

Step 4. Position the open jaws of the clamp tool over the raised tabs of the clamp ring and squeeze.

One clamp tool fits all size clamp rings. It can be operated with one hand, leaving the other hand free to hold the clamp ring in position. The tool cannot be removed until the clamp ring is fully compressed. A properly calibrated clamp tool eliminates the necessity to check each fitting ring with a go/no-go gauge.

Step 5. Verify the connection is secure by visually checking the clamp tab.

Check Calibration of Clamp Tool

Always check the Clamp Tool with the calibration gauge before the first and after the last crimp on each job site.

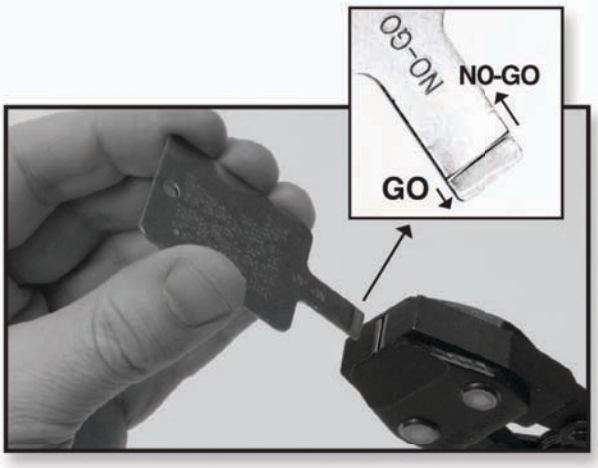

1. Close the Clamp Tool handles to the stop point and insert gauge into jaw gap

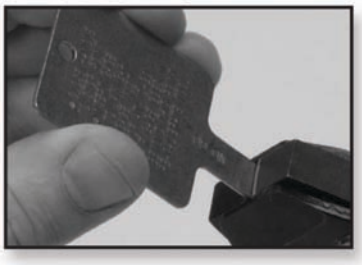

2. Gauge must stop at the NO-GO line in order to make proper connections

Calibrating the Clamp Tool

If the gauge goes into the jaws beyond the GO portion, the Clamp Tool should be recalibrated following these steps.

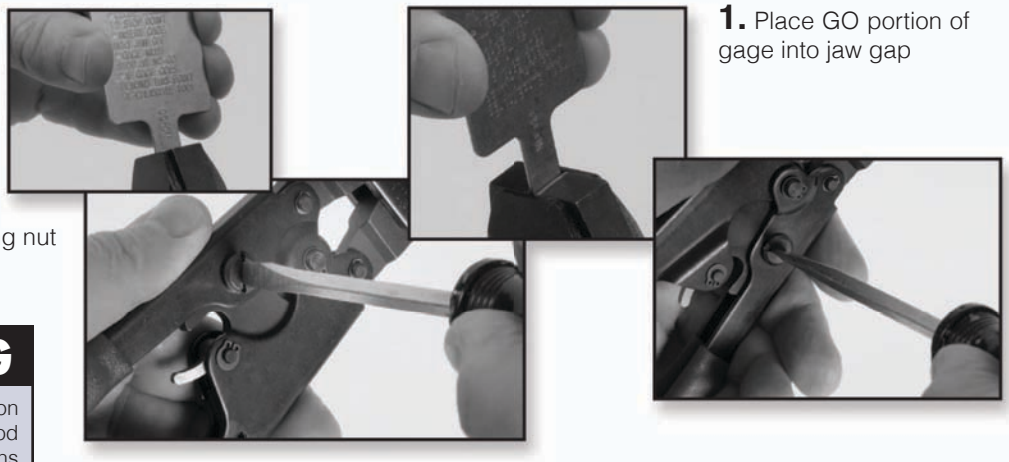

1. Place GO portion of gage into jaw gap

2. Loosen locking nut

3. Adjust clamp tool jaws by rotating the eccentric stud counter-clockwise until jaws contact gauge. Re-tighten the locking nut.

WARNING

Tools out of calibration may not make good long-term connections and can result in leaks developing over time.

Removal of a Clamp or Complete Connection

Place a flat-bladed screw driver under the clamp tab and pry up to unlock. Then using a clamp removal tool or pliers grab onto the tab and pull free.

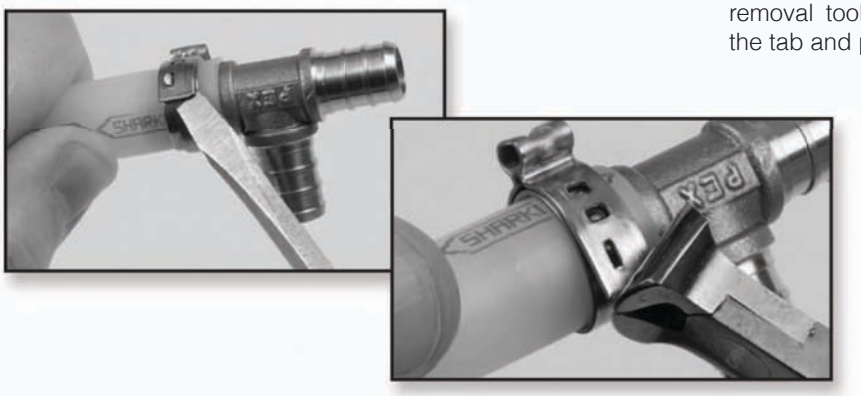

Note: *The previously clamped section of SharkBite® tubing should be cut off prior to making a new connection.*

Making a SharkBite® Crimp/Barb Connection

The use of traditional PEX components (manifolds, barbed fittings, clamp or crimp rings, etc.) offers the total lowest material cost.

Step 1. Use plastic tubing cutters to cut the tubing to length, making sure that you have a good square cut. A rough or uneven cut will result in a weakened joint.

Step 2. Slide the correct size crimp ring over the tubing and approximately 2" past the end of the tubing.

Step 3. Push the tubing onto the barbed fitting until it touches the fitting shoulder. Position the crimp ring 1/8"-1/4" from the end of the tube. This distance ensures that the clamp ring is positioned directly over the barbs on the fitting.

Step 4. Position the open jaws of the crimp tool over the crimp ring and squeeze. The jaws are interchangable, and include sizes for 3/8", 1/2", 5/8", 3/4" and 1" crimp rings.

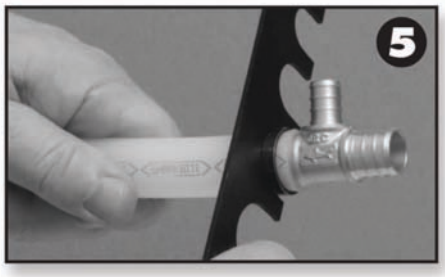

Step 5. Verify that the connection is secure by using the go/no-go gauge. The gauge slot that corresponds to the crimp ring size should easily slide onto the compressed crimp ring.

Dos and Don'ts for SharkBite® PEX Tubing

For potable water and hydronic distribution

{ Dos }

- **Do** use SharkBite® PEX tubing for hot and cold water distribution only.
- **Do** install SharkBite® PEX tubing to the appropriate plumbing code.
- **Do** pressure test the system upon completion.
- **Do** keep hot & cold lines separate.
- **Do** use only fittings and accessories that have been tested and approved for the SharkBite® PEX Connection System.
- **Do** leave extra tubing at both ends of run to make connections easier.
- **Do** ensure the tubing is supported properly to prevent undue stress, strain, thermal expansion and contraction.
- **Do** protect the SharkBite® PEX tubing from damage, both before and during the construction process.
- **Do** use SharkBite® tube liner with SharkBite® Fittings and SharkBite® PEX joint. (exception - 1/4" fittings)

{ Don'ts }

- **Do not** use sharp instruments to open the SharkBite® PEX packaging, you may damage the pipe.
- **Do not** use with natural gas, propane, fuel oil or any other fluid, chemical or product. SharkBite® PEX tubing (non oxygen barrier) is for use ***with potable water only*** and is not approved or intended for any other use.
- **Do not** freeze. SharkBite® tubing is freeze-resistant, but not freeze-proof. Pipe embedded in concrete that is subjected to freezing conditions will likely damage both the concrete and the pipe. Tubing that is not embedded and frozen may damage joints or manifolds. Be sure to carefully pressure test, inspect and repair systems that have been subjected to a freeze prior to returning them to normal operation.
- **Do not** pressure test with water in freezing conditions.
- **Do not** store or install where tubing will be exposed to direct or indirect ultraviolet light (i.e. sunlight).
- **Do not** expose the tubing to direct flame. Do not install tubing near extreme heat.
- **Do not** use in excessive operating conditions inconsistent with pressure ratings that appear on tubing and applicable standards.
- **Do not** subject tubing to prolonged exposure to free chlorine concentrations greater than 4 ppm.
- **Do not** use in contaminated soils.
- **Do not** expose to materials that affect the basic properties of cross-linked polyethylene, brass, or copper. Avoid contact with adhesives.
- **Do not** use with other fitting systems.
- **Do not** install through metal studs or concrete without using a protective sleeve.
- **Do not** install pipe that has defects such as: gouges, cuts, deep scratches, kinks, evidence of grease, tar or any chemical, exposure fading or discoloration.
- **Do not** use defective fittings with the pipe.
- **Do not** use supports that may collapse or cut the pipe. Supports should **not** have sharp edges which could damage the pipe.
- **Do not** use metal hangers with sharp or abrasive edges or hangers that may pinch or penetrate the pipe. Proper hangers, clamps and straps are available from your SharkBite® supplier.
- **Do not** pull pipe tight at connections. Prevent unnecessary strain on the pipe, fittings and connections with straps or clamps.
- **Do not** drag the pipe over rough terrain, rocks, or any other surface which could abrade, cut, puncture or damage the pipe wall in any way.
- **Do not** crush or kink the pipe.
- **Do not** heat kinked pipe to repair/reform. Inspect all pipe before and after installation. Damaged or kinked sections should be cut out and replaced. Keep the PEX pipe a MINIMUM of 12" vertically and 6" horizontally from sources of high heat such as recessed light fixtures, gas flue vents, heating appliances, or electric motors. Forced air heating ducts are not generally considered sources of high heat. These areas of installation should be rechecked after further construction and other mechanical systems have been installed. PEX can be run in return air plenums. Bend pipe 2" away from fitting. This prevents the fitting from being used as an anchor point.
- **Do not** exceed the minimum bend radius of the pipe. (see illustration on p.11)

Proper Support of SharkBite® PEX

SharkBite® PEX must be properly supported to protect against excessive strain. For both vertical and horizontal applications we recommend the tubing be supported every 32" between supports, leaving a little slack (1/8"-1/4") in the tube to allow for normal expansion and contraction. Always use approved PEX supports and never use a support that has sharp edges.

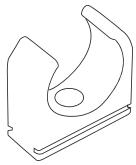

Typical approved PEX support.

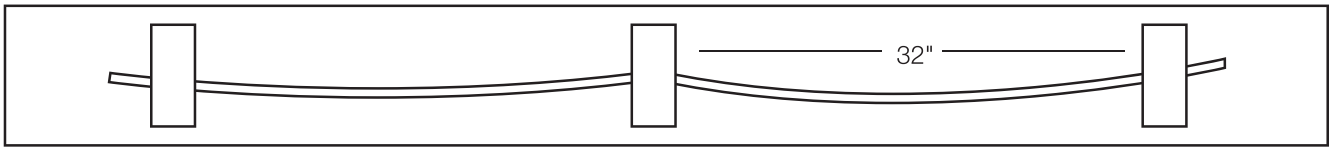

Concrete Installation SharkBite® PEX

The SharkBite® PEX tubing can be submerged in concrete but we recommend following these guidelines to ensure a long lasting, maintenance-free installation.

- Protect the tubing with non-metallic sleeves when entering or exiting the concrete slab. A larger diameter piece of SharkBite® PEX also works well in this application.
- Do not allow joints within the slab. Use a continuous length of SharkBite® PEX within the slab and be sure to check for leaks before pouring concrete.

Cross Linking Methods

Cross linking is a process that changes the chemical structure of high density polyethylene used to make PEX tubing, so that the polymer chains are connected with each other in a three-dimensional net by chemical bonds. PEX A, B, C and D are terms used to describe the different manufacturing methods used to produce PEX tubing. *Regardless of which manufacturing method is used, all PEX pipe meets the same standards for commercial and residential plumbing applications.*

Classification of Crosslinked Polyethylene

	Typology	Method	Symbol
A	Chemical	Peroxide cross linking	PEX-a
B	Chemical	Silane cross linking	PEX-b
C	Physical	Radiation cross linking (beta)	PEX-c
D	Chemical	Azocomponents cross linking	PEX-d

Technical Data for SharkBite® PEX

{SharkBite® PEX Tubing Marking:}

All SharkBite PEX Tubing is marked with:

TUBING LENGTH | **MANUFACTURER** | **OPTIONAL FOR OXYGEN BARRIER PIPE ONLY** | **TUBING SIZE & IDENTIFICATION** | **MANUFACTURING LOCATION & DATE**

0025 ft CASH ACME 02 BARRIER 1/2" SDR9 PEX5006 160PSI@73F - 100PSI@180F C1 WG 6.12.14=16:00

CODE EVALUATION

CSA B137.5 ANSI/AWWA C904 ASTM F876/877 (ASTM F1807, ASTM F2098, ASSE1061)

Technical Data for SharkBite® PEX (cont'd)

{ Certifications: }

The SharkBite® PEX tubing is design certified to ASTM F-876, F-877, CSA B137.5 standards, and is listed to the NSF standards 14 and CSA B137.5 standards for use in potable water systems.

{ Maximum Working Pressure }

160psi @ 73.4°F (23°C)

100psi @ 180°F (80°C)

80psi @ 200°F (93°C)

{ Thermal Expansion: }

Since SharkBite® PEX tubing will expand and contract during temperature changes, please allow slack when running the tube through the building. SharkBite® PEX will expand and contract at a rate of approximately 1" per 100 feet of tubing for each 10°F change in temperature (see equation below). We recommend that offsets and expansion loops be used as ways to compensate for expansion and contraction. The change of pipe length due to temperature increase can be calculated as follows:

$\Delta L = \alpha(L \cdot \Delta T)$
where: ΔL = change of length (inches)
ΔT = change of temperature (°F)
L = original pipe length (feet)
α = coefficient of linear expansion = (8 x 10-5 @ 68°F)

Example:
ΔT = 10°F L = 100' Δ L = 0.08"

{ Expansion/Contraction Loop Methods }

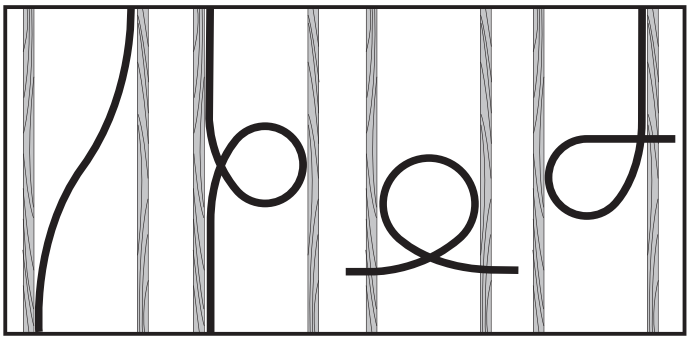

{ SharkBite® PEX Tubing Dimensions, Bend Radius and Fluid Capacity }

Nominal Diameter	OD inches	ID inches	Bend Radius	Fluid Cap 100'/Gals
3/8"	0.5	0.35	4"	0.53
1/2"	0.625	0.475	5"	0.96
3/4"	0.875	0.671	7"	1.9
1"	1.125	0.885	10"	3.1

{ Pressure Loss Data: }

Flow Rate GPM	Pressure Loss psi/100 ft of pipe			
	3/8"	1/2"	3/4"	1"
0.2	0.427	0.099	0.019	0.006
0.3	0.880	0.204	0.039	0.012
0.4	1.470	0.341	0.065	0.019
0.5	2.189	0.508	0.097	0.029
0.6	3.032	0.703	0.135	0.040
0.7	3.993	0.926	0.177	0.053
0.8	5.069	1.175	0.225	0.067
0.9	6.258	1.450	0.278	0.082
1	7.555	1.751	0.335	0.099
1.1	8.960	2.076	0.397	0.118
1.2	10.470	2.425	0.464	0.138
1.3	12.080	2.799	0.535	0.159
1.4	13.800	3.195	0.611	0.181
1.5	15.610	3.615	0.691	0.205
1.6	17.520	4.058	0.776	0.230
1.7	19.530	4.523	0.865	0.256
1.8	21.640	5.010	0.958	0.284
1.9	23.840	5.519	1.055	0.313
2	26.140	6.050	1.157	0.343
2.5	39.000	9.024	1.724	0.511
3	54.100	12.510	2.390	0.708
3.5	71.360	16.500	3.150	0.933
4		20.970	4.002	1.185
4.5		25.900	4.943	1.463
5		31.300	5.972	1.768
6		43.440	8.284	2.451
7			10.930	3.232
8			13.890	4.108
9			17.170	5.076
10			20.750	6.134
11			24.630	7.281
12			28.810	8.514
13				9.832
14				11.240
15				12.720

Policies & Warranty

Return Goods Policy

Restocking charges and items returned for credit:

- New Standard Catalog Items - 20% restocking charged if returned for credit only. For items ordered in error, the charge will be reduced to 10% if replacement items are purchased.
- Special Order Items (products with special modifications) - 25% minimum to 50% maximum restocking charge, depending on modifications (consult factory).

All restocking charges are based on F.O.B. Cullman, Alabama and products being new (never having been installed in a line). We do not accept any valves which have been used. Prior to return of product, an R.G.A. number must be assigned by a customer service representative. This number should be referenced on the outside of the carton and on all related paperwork. Items should be returned prepaid to 2400 7th Avenue SW, Cullman, Alabama, 35055, marked "Attn: Returns Department." Any information or correspondence may be sent with the product or mailed separately.

A. Reliance Worldwide Corporation, the Company, warrants the following products - SharkBite® PEX Tubing, SharkBite® Push-Fit Fittings, SharkBite® Brass PEX Barbed Fittings, SharkBite® Copper PEX Manifolds and other SharkBite® Accessories - to be free of defects in material and workmanship for the time periods shown below and when used and installed in accordance with the requirements set forth below.

1. SharkBite® PEX Tubing cross-linked polyethylene (non-barrier & barrier PEX) pipe for a period of twenty-five (25) years from the date of manufacture.
2. SharkBite® Push-Fit Fittings brass push fit fitting for a period of twenty-five (25) years from the date of manufacture.
3. SharkBite® Brass PEX Barbed-Fittings and SharkBite® Copper PEX Manifolds for a period of sixty (60) months from the date of manufacture.
4. All other valves and accessories sold under Reliance Worldwide Corporation's brand names of the SharkBite® PEX and / or SharkBite® Connection System for a period of twenty-four (24) months from the date of manufacture.

SharkBite® products shall be installed in accordance with all applicable plumbing, heating and mechanical codes and in accordance with any local, state or federal requirements.

Reliance Worldwide Corporation's obligation will be to repair or replace, at its discretion, any of the products covered under this limited warranty when the materials used to produce the product or the workmanship of the manufacturing process are proven to be defective.

B. In the event of a system malfunction or leak caused by defective warranted products (and not by improper installation or usage, incorrect handling procedures or by jobsite or installation damage), a reasonable pre-approved amount will be allowed for repair materials and repair labor. In the event of a leak occurring in the factory manifold, please contact Reliance Worldwide Corporation. Note that Reliance Worldwide Corporation limits its warranty to its tubing, valves and accessories, fittings and manifolds. Reliance Worldwide Corporation does not warrant the connection. The integrity of the connection is the sole responsibility of the installer.

C. To qualify for a warranty remedy under paragraph B, you must contact Reliance Worldwide Corporation in advance and receive written authorization for this remedy from an authorized Reliance Worldwide Corporation representative. Reliance Worldwide Corporation will not consider expenses for repair materials, labor and / or freight unless authorized in advance and in writing.

D. To qualify for the warranty described above, you must:

1. Use construction techniques in compliance with applicable plumbing, heating and mechanical codes to install our products, as specified in our current design and installation guidelines and technical notes. This shall include field pressure testing prior to concealing with concrete or by other means.
2. Install and use Reliance Worldwide Corporation's SharkBite® PEX Tubing and Reliance Worldwide Corporation's SharkBite® Connection System products according to all guidelines and manuals published by Reliance Worldwide Corporation. It is expressly understood that failure as a result of any freezing fluids within the pipes does not constitute a defect in material or workmanship and shall not be covered by this warranty.
3. Install and use Reliance Worldwide Corporation SharkBite® PEX Tubing and Reliance Worldwide Corporation SharkBite® Connection System products in a system that will not operate at temperatures or at pressures that exceed the printed rating on the tubing.
4. Install and use all warranted Reliance Worldwide Corporation SharkBite® product in compliance with any applicable local building, plumbing and mechanical codes.

E. Evidence of tampering, mishandling, neglect, accidental damage, freeze damage or unauthorized repairs that cause damage to Reliance Worldwide Corporations SharkBite® warranted products void any warranty coverage of those particular products. The terms of this warranty specifically exclude all field connections. Reliance Worldwide Corporation, in its sole discretion, can decide whether the warranty will be honored or is void.

F. Although Reliance Worldwide Corporation provides a plumbing system to facilitate a complete installation; other manufacturer's tubing and/or fittings may be installed in any given installation provided manufacturing of the tubing and/or fittings demonstrates compliance with the applicable ASTM standards, and the product has been certified by a recognized third-party testing agency. The Reliance Worldwide Corporation product in the given installation will continue to be covered under this warranty. NOTE: Reliance Worldwide Corporation will be responsible only for proven defects in material or workmanship in Reliance Worldwide Corporation products. Problems in products manufactured by another company should be reported to that manufacturer.

G. Disclaimer of Warranty. THE EXPRESS WARRANTY SET FORTH HEREIN IS THE ONLY WARRANTY GIVEN BY Reliance Worldwide Corporation WITH RESPECT TO THE PRODUCTS LISTED IN PARAGRAPH A. Reliance Worldwide Corporation MAKES NO OTHER WARRANTIES, EXPRESS OR IMPLIED, AND HEREBY SPECIFICALLY DISCLAIMS ALL OTHER WARRANTIES, EXPRESS OR IMPLIED, INCLUDING BUT NOT LIMITED TO THE IMPLIED WARRANTIES OF MERCHANTABILITY AND FITNESS FOR A PARTICULAR PURPOSE.

H. Limitation of Remedy and Liability. The remedy described above shall constitute the sole and exclusive remedy for breach of warranty, and, apart from that remedy, Reliance Worldwide Corporation shall not be responsible for any incidental, special or consequential damages, including without limitation, lost profits or the cost of repairing or replacing other property which is damaged if these warranted products do not work properly, other costs resulting from labor charges, delays, vandalism, negligence, fouling caused by foreign material, damage from adverse water conditions, adverse chemical environments, or any other circumstances over which Reliance Worldwide Corporation has no control. This limitation applies even if Reliance Worldwide Corporation could have foreseen or has been advised of the possibility of these damages. This warranty shall be invalidated by any abuse, misuse, misapplication or improper installation of the product. Proof of purchase is required to validate the warranty period.

Some states do not allow limitations on how long an implied warranty lasts, and some states do not allow the exclusion or limitation of incidental or consequential damages. Therefore, the above limitations may not apply to you. This Limited Warranty gives you specific legal rights, and you may have other rights that vary from state to state. You should consult applicable state laws to determine your rights. SO FAR AS IS CONSISTENT WITH APPLICABLE STATE LAW, ANY IMPLIED WARRANTIES THAT MAY NOT BE DISCLAIMED, INCLUDING THE IMPLIED WARRANTIES OF MERCHANTABILITY AND FITNESS FOR A PARTICULAR PURPOSE, ARE LIMITED IN DURATION TO ONE YEAR FROM THE DATE OF ORIGINAL SHIPMENT BASED ON PROOF OF PURCHASE, OR, IF NOT AVAILABLE, FROM THE DATE OF MANUFACTURE.

I. **RETURNED GOODS - CREDIT:** No products shall be returned without authorization. Any credit issued will be at the price originally invoiced, less handling charges, based on the costs of reconditioning, boxing, etc. Obsolete or made to special order products are not returnable.

NOTE: Prices and terms are subject to change without notice and supersede all previous quotations. Reliance Worldwide Corporation reserves the right to change or modify product design or construction without prior notice and without incurring any obligation to make such changes and modifications on products previously sold.

SharkBite®

2727 Paces Ferry Road
Building Two Suite 1800
Atlanta, GA 30339

Tel: 1-877-700-4242
Fax: 1-877-700-4280

www.sharkbite.com

A Division of the Reliance Worldwide Corporation

SECTION 22 11 19

Hose Bibb

HOSE BIBB VALVE

PHYSICAL CHARACTERISTICS

- Connection type: Male thread and solder
- Heavy-duty
- 3/4" hose thread outlet
- Max. temperature rating: 82º F/28º C
- Max. pressure ratings: 125 PSI
- Meets ANSI/NSF 61-9 requirements
- CSA B125 certified

ITEM NUMBERS	SIZE
VHB-CON-C3B	1/2 in.
VHB-CON-F4B	3/4 in.

CERTIFICATIONS

NO.	DESCRIPTION	MATERIAL
1	Handle nut	Brass
2	Handle	Zinc
3	Stem	Brass
4	Packing	Rubber
5	Packing nut	Brass
6	Washer	Stainless steel
7	Body	Brass
8	Disc	Rubber
9	Disc screw	Brass

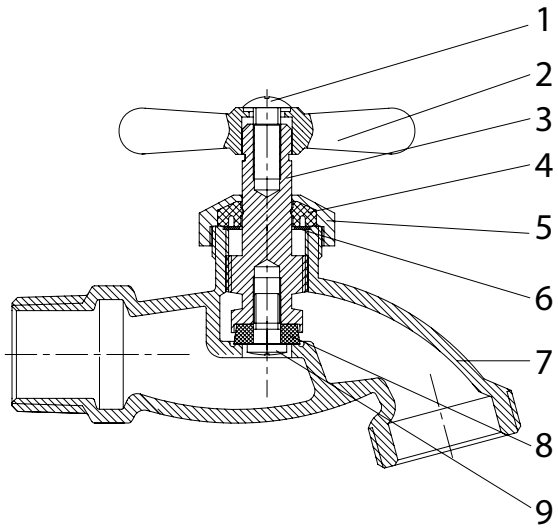

LIMITED LIFETIME WARRANTY

The distributor warrants to the original consumer purchaser this product to be free from defects in material and workmanship under normal use in residential applications. At its option, the Company will provide repair parts or replace defective product when the product is used in accordance with the manufacturer's specifications.

This warranty is not applicable to any products or parts of products where damage is caused by use of non-genuine parts; is due to installation error, product misuse, negligence or faulty maintenance; or where the product is not installed according to local building codes.

This warranty excludes labor charges or damage incurred during installation, repair or replacement, and any indirect, incidental or consequential damages, losses, injury or costs of any nature. This warranty is in lieu of and excludes all other warranties, conditions and guarantees, whether expressed or implied, including without restriction those of merchantability or fitness of use.

Liability under this warranty will not exceed the purchase price for the product claimed to be defective by the original consumer purchaser. Some states or provinces do not allow the exclusion or limitation of consequential damages so the above limitations or exclusions may not apply. This warranty gives you specific legal rights and you may also have other rights which vary from state to state, or province to province.

Inquiries regarding warranty claims can be directed to 1-877-319-3757, 8 a.m. - 5 p.m., CST, Monday - Friday.

SECTION 22 12 00

WH (Electric) 19.9gal + Sanden 43 Gallon w/Heat Pump

SANDEN

Delivering Excellence

Heat Pump Water Heater

SAN CO_2

Hot water, *naturally.*

SAN CO_2

Hot water, *naturally.*

The Sanden SANCO$_2$ Heat Pump Water Heater is a highly energy efficient alternative to traditional electric or gas water heaters. It absorbs heat from the air to heat water – saving energy, saving money and reducing greenhouse gas emissions.

Superior Features

BuildingGreen APPROVED
TOP 10 PRODUCT FOR 2016

ENERGY EFFICIENT

- 4x more efficient than traditional electric water heaters
- Allows use of off-peak power

HIGH PERFORMANCE

- Greater first hour rating than all heat pump water heaters
- Faster recovery after hot water draw

SUPERIOR QUALITY

- Corrosion-resistant stainless steel tank
- 3-year labor, 10-year parts heat pump warranty; 15-year tank warranty

EXTENDED OPERATING RANGE

- Hot water production down to -15°F
- 149°F delivered hot water temperature
- No need for a back up electric element in the storage tank

LOW-PROFILE DESIGN

- Whisper-quiet noise level (38dB)
- Slimline heat pump design for a reduced footprint

TANK SIZE OPTIONS

- Two sizes to best fit your hot water needs

43 Gallon Tank
66-Gallon
first hour delivery

2 to 4 People

83 Gallon Tank
97-Gallon
first hour delivery

5+ People

Minimal Impact on Global Warming

UNIQUE OZONE-FRIENDLY CO_2 REFRIGERANT

Heat pump water heaters commonly use synthetic refrigerants, such as R410A or R134A. Although these refrigerants do not deplete the ozone layer, they can have a significant impact on global warming. The CO_2 refrigerant uniquely used in the SANCO_2 system has an extremely low Global Warming Potential*, and CO_2, a natural refrigerant, does not deplete the ozone layer.

*Global Warming Potential (GWP) is a measure of how much a given mass of greenhouse gas is estimated to contribute to global warming. It is a relative scale which compares the gas in question to that of the same mass of carbon dioxide (whose GWP is equal to 1).

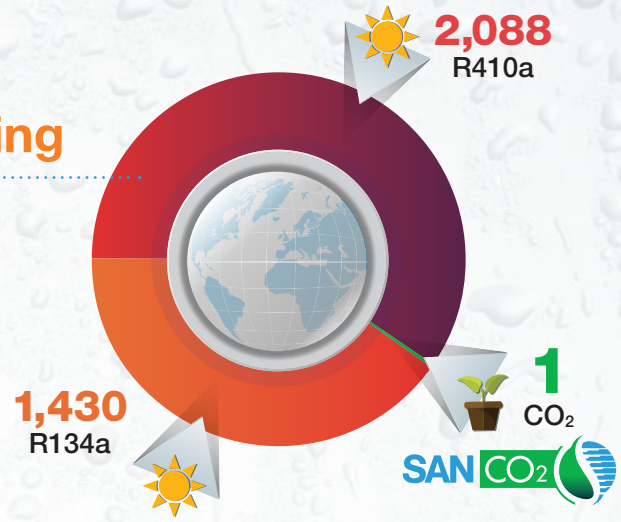

Global Warming Potential*
by refrigerant type per 100 years

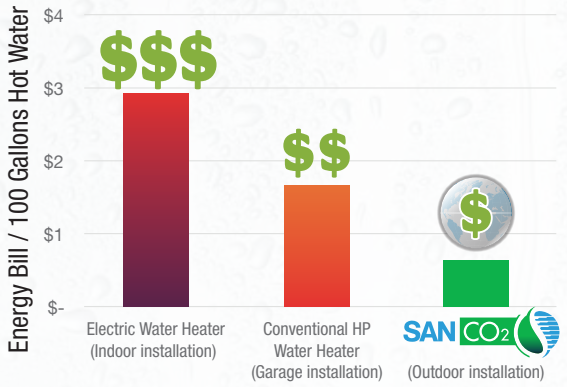

Energy Bill Comparison
with traditional water heaters

Ultra High Efficiency Reduces Energy Bills

USES OVER 70% LESS ELECTRICITY

The SANCO_2 system uses an inverter-type compressor, DC fan motor and pump. Our design minimizes energy consumption, maximizes water-heating capacity, and allows for faster recovery, resulting in significantly lower operating costs than electric-resistance storage water heaters or conventional heat pump water heaters.

- Field testing data in cold climate (Northwest)
- Reference: Washington State University presentation by Ken Eklund available at www.sandenwaterheater.com
- Electricity price: 12.73 cents per kwh (EIA Residential October 2015)

Easy Installation

FLEXIBLE 2-PIECE SYSTEM

The tank is installed indoors and the heat pump outdoors (up to 25 feet away) with only water piping connections required between the two. This flexible SANCO_2 design offers several advantages including maintaining comfortable indoor air temperatures (unlike conventional heat pump water heaters that 'scavenge' heat from the indoor air), along with reducing in-home noise.

SANDEN
Delivering Excellence

SAN CO2 Specifications

All dimensions displayed in inches.

Heat Pump

GUARANTEED 10 YEAR HEAT PUMP WARRANTY

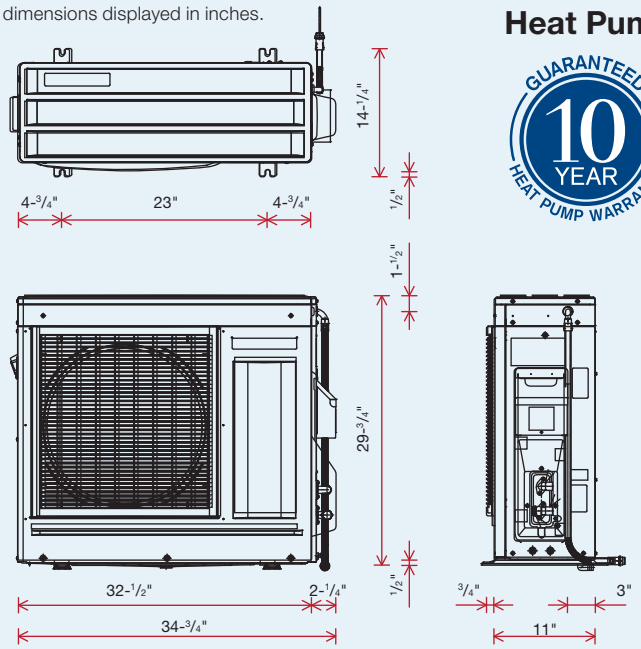

Outdoor Unit (Heat Pump) Model No. GUS-A45HPA

Performance	With 43-gal.	With 83-gal.
Energy Factor	3.5	3.4
First Hour Rating	66 gallons	97 gallons
Specifications		
Water Temperature Setting	149°F	
Ambient Air Operating Temperature	-15°F to +110°F	
Heat Pump Capacity	15,400 Btu/h	
Heat Pump Capacity	4.5 kW	
Heat Pump COP	4.5	
Refrigerant Type	R744 (CO_2)	
Compressor Type	Inverter	
Power Voltage	208/230v –1Ph – 60Hz	
Breaker Size	15 Amps	
MCA	7.7 Amps	
Outdoor Operating Noise Level	38 dB	
Weight	123 lbs	
Pipe Size (Tank to Heat Pump)	1/2" (Cold & Hot)	
Max Length Inc Vertical	25 ft	
Max Vertical Separation	10 ft	
Max Water Pressure	95 Psig	

Stainless Steel Storage Tank

PRO RATA 15 YEAR TANK WARRANTY

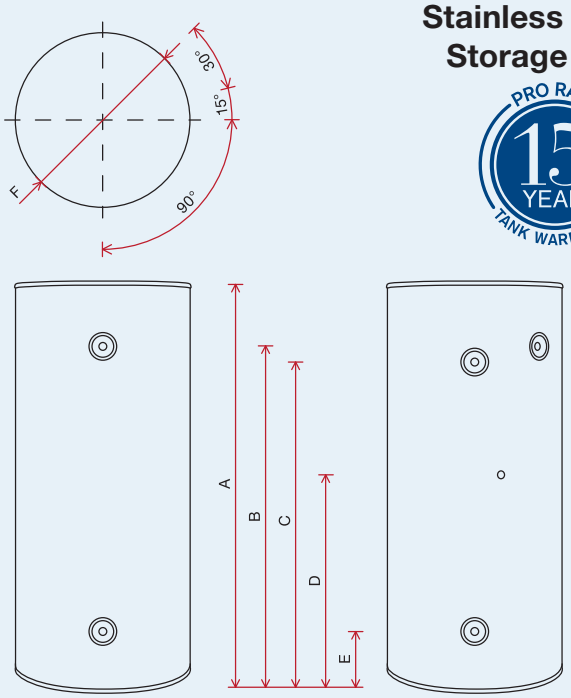

Tank Model No:		GAUS-160QTA	GAUS-315EQTD
A	Height	47-1/4"	58-5/8"
B	Hot Water Outlet & PR Valve	37-3/8"	49-5/8"
C	Heat Pump Return	37-3/8"	49-5/8"
D	Sensor Port	17-1/8"	37"
E	Cold Water Inlet / Cold Water to HP	8-1/4"	7-7/8"
F	Diameter	22-1/2"	26-3/4"
	Weight (lbs)	88 lbs	154 lbs
	Tank Capacity (gallons)	43 gallons	83 gallons
Connection Sizes			
Cold Water Inlet		3/4" NPT	3/4" NPT
Hot Water Outlet		3/4" NPT	3/4" NPT
Cold Water to Heat Pump		1/2" NPT	1/2" NPT
Hot Water Return from Heat Pump		1/2" NPT	1/2" NPT
Pressure Relief Valve Setting (Psig)		125 Psig	125 Psig

Note: Materials and specifications are subject to change without notice.

REV 0616

INTERTEK ETL LISTED c US

For more information, please call **1-844-SANDCO2** or email **info@sandenwaterheater.com**.

SANDEN
Delivering Excellence

Sanden International (U.S.A.) Inc.
47772 Halyard Drive, Plymouth, MI 48170

Phone: 1-844-726-3262 or 1-844-SANDCO2
Email: info@sandenwaterheater.com
Website: www.sandenwaterheater.com

Sanden Dealer

SANDEN
Delivering Excellence

Installation manual

Eco system of Sanden

Sanden Heat Pump Water Heater with Natural Refrigerant (CO2)

Covering model numbers
GAUS-315EQTD
GAUS-315EQTE

Heat Pump Unit GAU-A45HPA

Tank Unit
GAU-315EQTE

Contents

Cover page 1
Contents 2
Introduction 3
How it works 3
Installation details/layout 4
Installation location 5
Heat Pump Unit installation 6
Heat Pump/Water piping installation 7
Water piping installation 8
Heat Pump Unit Water piping 9
System Piping 10
Electrical installation 11
Electrical connections 12
How to connect tank unit thermistor cable 13
System operation On/Off Peak power 14
Electrical Wiring 15
Filling the system - Air Purge 16
Freeze Protection 17
Unit Operation - Time Setting 18
Blackout time setting 19
Maintenance Mode 20
Maintenance Mode 21
Error Codes 22
Error Codes 23
Water supply quality 24
Dimensions and Technical Data 25
Dimensions and Technical Data 26
Wiring Diagram 27
Warranty Policy 28
Warranty Period 29
Post installation inspection checklist 30
Check sheet 31
Memo 32

PATENTS

This water heater may be protected by one or more patents or registered designs in the name of Sanden International USA Ltd

TRADE MARKS

® Registered trademark of Sanden International USA Ltd

.

Note: Every care has been taken to ensure accuracy in preparation of this publication.
No liability can be accepted for any consequences that may arise as a result of its application. Sanden is in a process of continuous improvement with, therefore specifications may be different to those referenced in this manual – Please contact Sanden International or it's distributors for the latest specifications at the time of install.

Introduction

The Sanden Heat Pump Water Heater System has been designed using the latest refrigeration technology to remove the heat from the air to heat water. The refrigerant we use is CO_2 which does not contribute to global warming, so it allows us to help keep a clean healthy earth for future generations.

We have also considered energy efficiency. By using CO_2 as the refrigerant we have produced one of the most energy efficient units currently available. It's even more efficient when connected to off-peak power[1] and the noise level is so low it will operate unobtrusively throughout the night.

How it works

Figure 1: Heat Pump Water Heater System

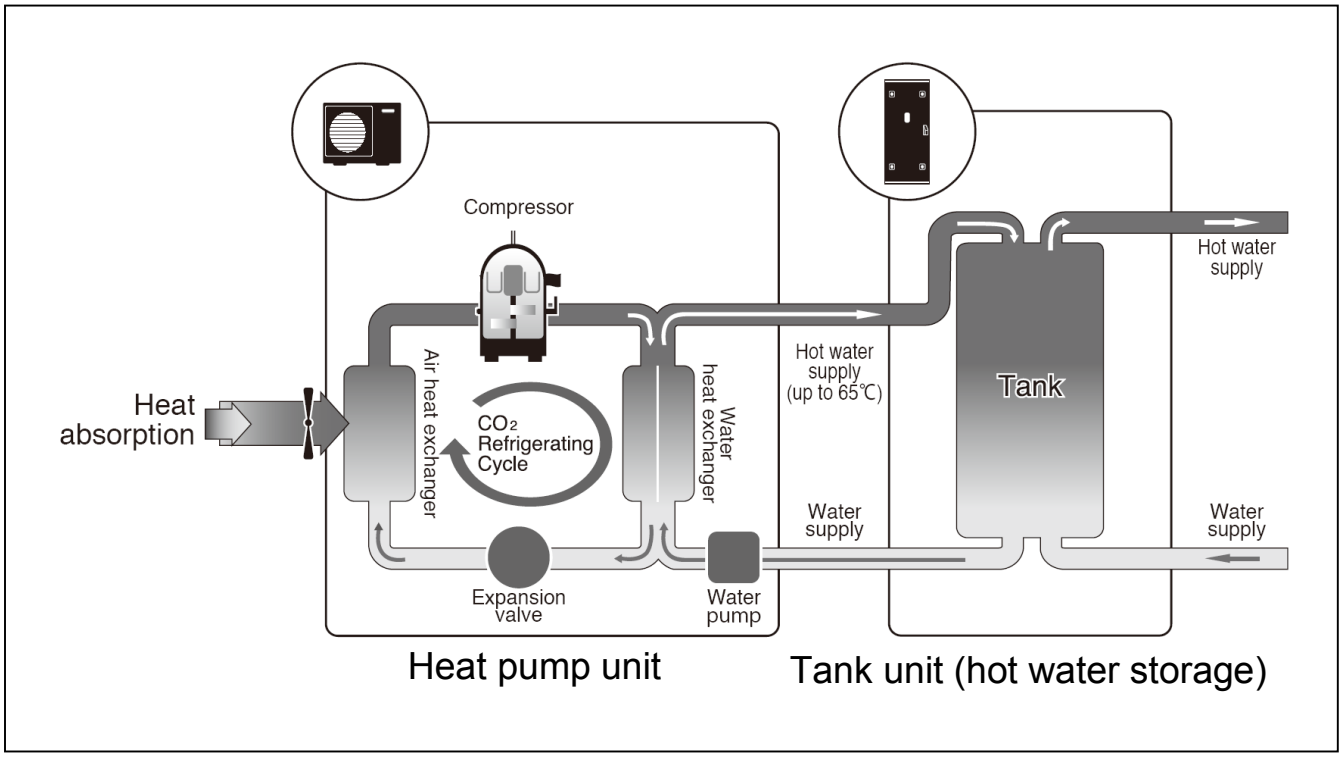

Note [1] operating conditions may vary depending on the type of off peak tariff that is available in your area. The unit must have a minimum of 5 hours continuous power available at all time to allow the unit to operate without affecting reliability.

Installation details

This Heat Pump Water Heater System must be installed by licensed personnel in accordance with local building codes:

- Installing contractor should be licensed by applicable state/province and municipal authorities to install an Electrical & Plumbing product.

- The unit has been designed for heating potable domestic hot water and any other usage, such as space heating requires a heat exchanger suitable for local codes to be installed on the system to separate potable and non potable water.

- The unit is designed to operate when connected to the water supply with a maximum operating pressure of 94 PSI (650 kPa). To ensure the mains pressure does not exceed this, first check incoming cold water mains pressure, and then a pressure regulating device must be connected to the water supply line.

- **⚠ DANGER** This system delivers hot water exceeding 120 ºF (50 ºC). Installation of a temperature tempering device is **MANDATORY** to avoid potential scalds and burns.

- The unit must be stored and transported in an upright position. Failure to do so may render the unit faulty. Such failure is not covered under any warranty agreements.

Failure to comply with the above conditions will void the warranty.

Figure 2: Typical installation layout

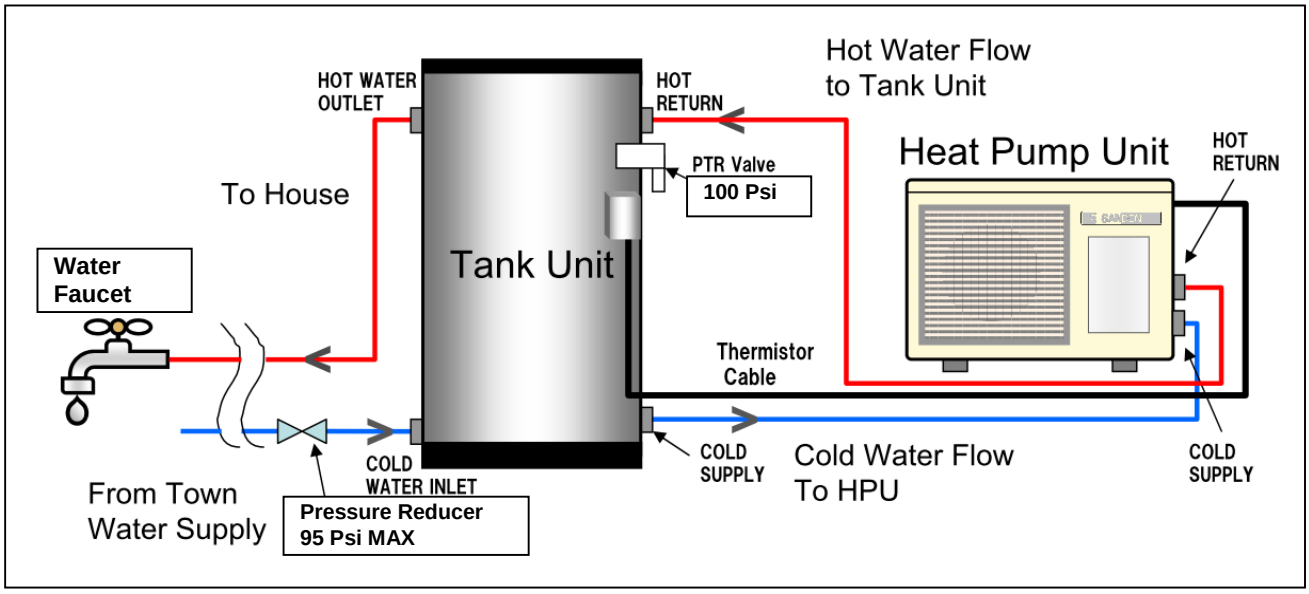

Installation location

- For the most efficient operation of the heat pump unit the optimum location is the warmest side of the property and there should be sufficient space for the air to circulate through the unit.
- The tank unit should be located as close as possible to the most frequently used hot water outlet such as a bathroom. It may be located either outside or inside. The heat pump unit must be located outside and as close as practicable to the tank unit but not further than 50ft (15m) away from the tank.
- Ensure sufficient clearance around the heat pump unit to allow air to circulate and provide adequate space for service maintenance of the unit (Figure 3).
- Although the heat pump unit is very quiet, it is preferable to avoid installing it directly below a bedroom window.
- Install the heat pump unit in an area which allows sufficient ventilation. Poor ventilation may cause the unit to short cycle and this could increase power consumption by more than 10%.
- Do not install the heat pump unit in a confined space.
- If the heat pump unit is installed facing a wall, exhaust air may stain the wall.

Figure 3: Restrictions on where the heat pump unit can be installed (overhead view)

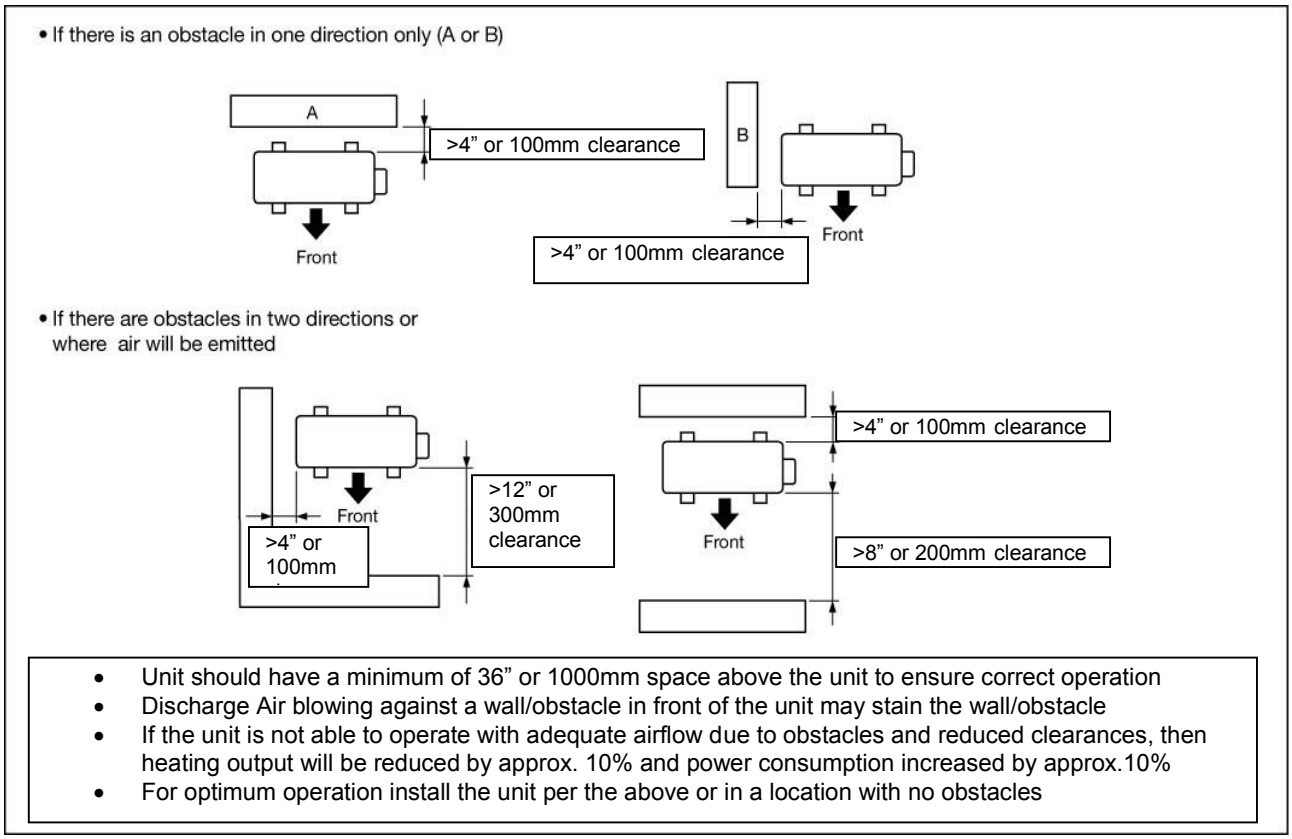

Figure 4: Restrictions on installation between the tank unit and the heat pump unit

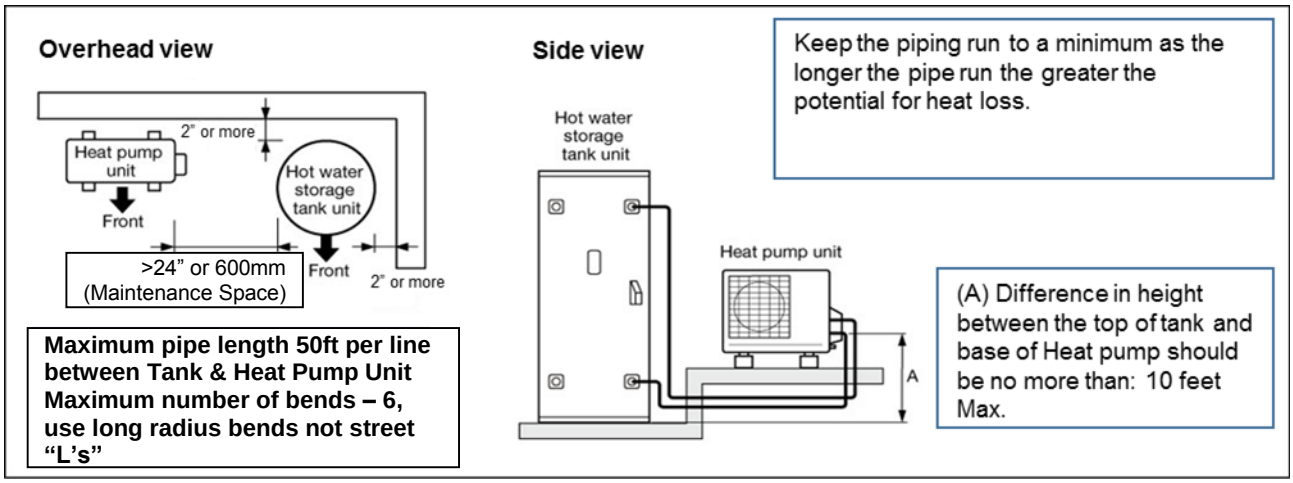

Heat Pump Unit Installation

- The surface to which the heat pump unit is installed must be firm, preferably a concrete pad or block. If the surface is firm there is no need to fix the unit to a base surface, unless there is a likelihood of high wind or local vibration.
  If the heat pump unit and tank unit are to fixed, appropriate fixing devices for the weight/expected duty should be used.
  Note: For California installation this water heater must be braced, anchored, or strapped to avoid falling or moving during an earthquake.
  Note : For Florida installation the Heat Pump unit should be installed in accordance with all local codes regarding Hurricane winds.

- Use appropriately treated lumber or pre fabricated "pump ups" to raise the Heat Pump unit 4"-6" from the ground – this will allow defrost condensate to drain.

- A pressure and temperature relief (PR) valve is included in the installation kit of the tank unit. This is installed in a defined point near the top of the tank unit. The PR valve must have a clear drainage where escaping steam or water can flow freely.

- The installation site must be well drained so that any water accumulating (such as rain or pipe leakage) will drain away and not enter the heat pump unit and the tank unit.

- Supply water pressure must be a minimum of 29 PSI (200 kPa) to ensure Heat Pump unit operation – If pressure is below 29 PSI install a booster pump to water supply.

Note: The entire system is set up and fully functional when supplied. Once all the water and electric connections have been made the system will operate automatically provided that mains power is available.

Cont

The only adjustment required is to the current time setting on the timer setting panel under the top housing cover, especially if the blackout time setting is desired. See current time setting, and blackout time section on page 19.

Figure 5: Heat pump installation example and dimensions

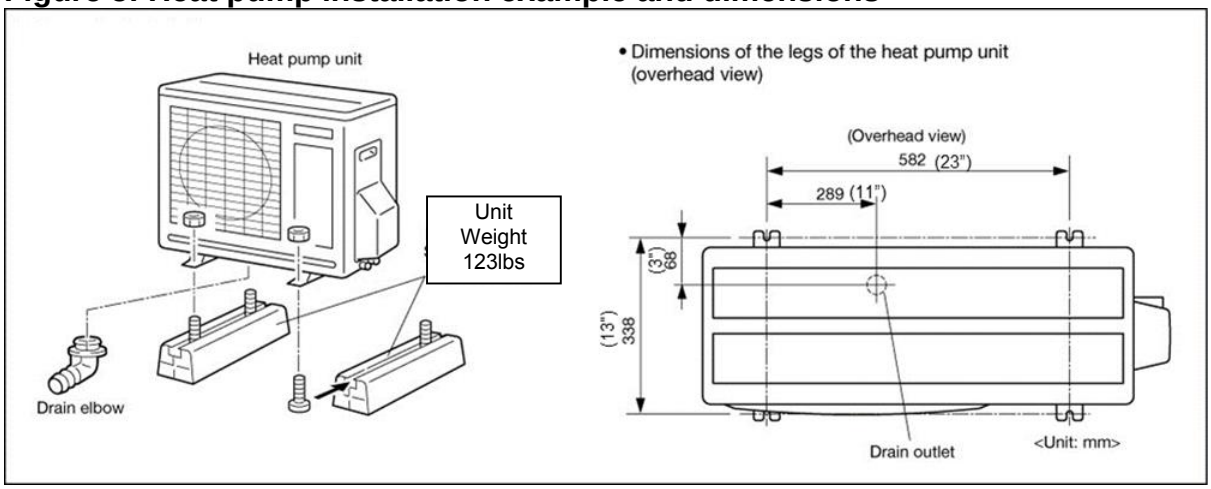

- Attach the drain elbow to the drain opening located on the bottom of the heat pump unit. The drain elbow is included in the installation kit for the heat pump unit.

- Attach a drain hose with 5/8 inch (16mm) of inner diameter to the drain elbow to guide the drained water to an appropriate drain.

Water Piping Installation – Heat Pump Unit & Tank

- All piping that connects to the water supply must be installed by a licensed plumber.

- The water supplied to the system must comply with the potable water quality standard. Use of water that does not comply with this standard could result in a malfunction of the system.

Description	PH	TDS (Total Dissolved Solids)	Total Hardness	Aluminium	Chlorides	Copper	Iron	Manganese	Zinc
Maximum Levels	6.0 to 9.0	Up to 500 ppm	Up to 200ppm or 12 grains hardness	Up to 0.2 ppm	Up to 200 ppm	Up to 1.0 ppm	Up to 0.3 ppm	Up to 0.05 ppm	Up to 5 ppm

- The water supply must have a pressure of 29 PSI (200 kPa) or higher.

- A drain trap must be installed on the drain pipe if water is to be drained to a drain pan

Cont

- This product cannot be connected to a solar water heater.

- The piping must be appropriately insulated, consider Heat tape to protect the water piping in areas with freezing temperatures.

- If the piping needs brazing make sure that all flux and flux splatter is wiped away with a wet cloth. When brazing ensure connections are protected using a wet cloth

- As the hot-water supply pipe will expand and contract, use sleeves when penetrating through concrete walls or slabs.

- With buried piping, an outer cover will need to be used that has had both ends sealed to avoid any ingress of rain.

- Use only heat-resistant and corrosive-resistant material to seal the pipe joints.

- Cutting and wrenching the piping material may result in oil and dust adhering to it. After processing, clean the material with a mild detergent before doing any piping work and smooth the edges to remove any scratches and burrs. (After flowing water through it verify whether any debris has accumulated on the filter of the faucet and heat pump unit pipe.)

- When using PTFE sealing tape ensure that no tape is sticking out of the threads.

- If any heat-resistant PVC piping is used and are bonded together, flow water through them after the pipes have set to prevent any bond adhering to the filter or other parts.

- Follow the manufacturer's instruction manual for the type of bond, amount to be applied, curing time, and other specifications.

- If any bond or flux has entered the tank unit and the hot water has a chemical/acrid smell take the following countermeasures.

  a) After heating the water in the tank unit, drain it and clean inside the tank unit. Fill the tank unit with 26 gallons (100 litres) of water and exchange twice.
  b) Clean or change the filter.
  c) Fill up the tank unit.
  d) Drain water from the relief valve for one to two minutes.
  e) Run water from all the hot water supply faucets in the house for about ten minutes to clean inside the pipes.

Heat Pump Unit Water piping

- Connect the heat pump unit COLD supply to the tank unit fitting marked Cold Supply. – ½” NPT Connection (Certain early units may use ½” BSP connections).
- Connect the heat pump unit HOT return to the tank unit fitting marked Hot Return – ½” NPT Connection (Certain early units may use ½” BSP connections).
- Connect the mains water supply to the lower fitting on the tank unit marked Cold Water Inlet.
- Connect the hot water supply pipe to the top of the tank unit marked Hot Water Outlet.
- Install the supplied PR valve to the fitting on the tank unit marked PR valve, pipe from PR valve directly to a Building drain, do not install any shut off valve between PR valve and Building drain.
- Run water through the pipe(s) to remove any debris inside before connecting the pipe(s).
- After all the piping connections are completed, run water through the system.
- Close the shut off valves (four places) and detach the filter on the cold supply connector of the heat pump unit to confirm there is no debris blocking the filter. Clean the filter if any debris is found.
- Remove the air from the system according to the instructions below on Page 16.
- Make sure all the necessary devices are mounted to the pipes as shown in diagram.
  If the heat pump unit piping is kinked or clogged or the air inside was not removed during the test operation, temperature of the supplied hot water may become inconsistent.

Figure 6: Typical System piping

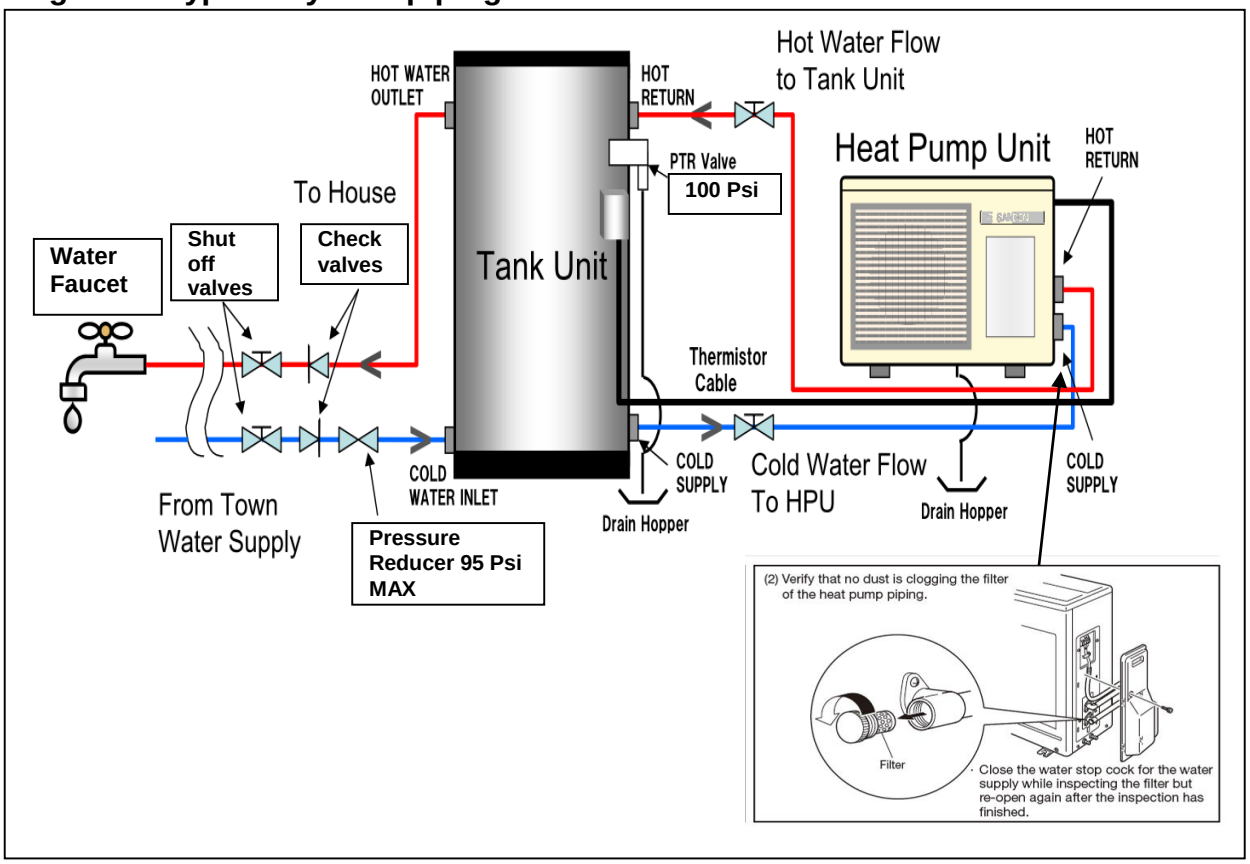

Mains Power/Electrical Installation

⚠ DANGER

- All Electrical Wiring should be done in accordance with the latest edition of the National Electrical Code (NEC) and all local State/Province and Municipality codes.
- The power requirement for the system is a dedicated 15 amp circuit fitted with a circuit breaker. This circuit may be connected to constant power or off-peak power.
- A local disconnect should be installed adjacent to the Heat Pump unit in accordance to NEC and local codes.
- Installation of this system must be carried out only by a qualified installation technician (electrical or plumbing).

Electrical connections

Electrical installation should only be done by a licensed electrician

Outline of electrical system connections

- Breaker size and wiring must be sized per NEC rules for the rating plate amperage, MCA and MOP.
- Power Supply is 208/230V-1Ph-60Hz
- Verify that the tank unit is full of water and the water shut off valves are open before turning on the power.

How to connect Main Power

- Remove the piping cover, terminal block cover and screw clamp fitting. (Philips head screwdriver required)
- Connect the power wiring to the terminal block per the wiring diagram/manual
- Ensure ground wire is connected
- Secure the power supply wiring below the terminal block with the screw clamp fitting.
- Attach the terminal block cover and piping cover back on the heat pump unit.

Figure 10: Power Wiring Connections

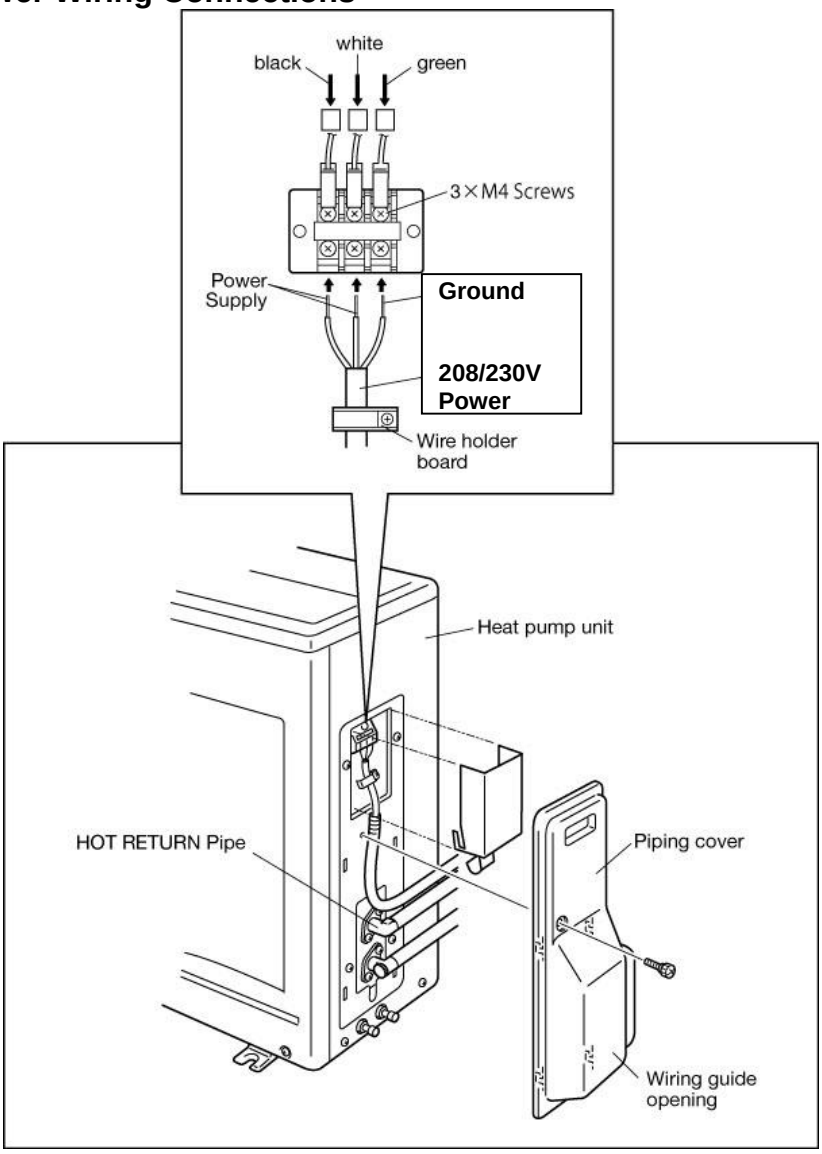

How to connect Tank thermistor cable to Heat Pump unit

- The thermistor cable and conduit length are designed to cover the maximum allowable distance between the tank unit and heat pump unit (50 feet). If the units are located closer, the thermistor cable and conduit may be cut to the desired length (Figure 11).

- Attach the conduit connector to the conduit end. Push the conduit into the opening on the connector until the conduit does not go any further. Pull the conduit several times to ensure the connector is fixed properly to the conduit.

- Unscrew and carefully remove the terminal block cover. Do not use unnecessary force to remove the cover as this could pull and break the cable coming out of the tank unit.

- Attach the connector on the end of the thermistor conduit coming from the heat pump unit side to the opening on the bottom of the cover on the tank unit.
  Confirm the gasket is adhered to the thread of the conduit connector before attaching the connector to the cover. If the gasket is not present, there is a risk of water getting inside the cover and this may result in a malfunction of the terminal block.

- Connect the thermistor cables to the bottom of the terminal block.
  Replace the terminal block cover back onto the tank unit and tighten the screws.

Figure 11: Connecting tank unit thermistor cable

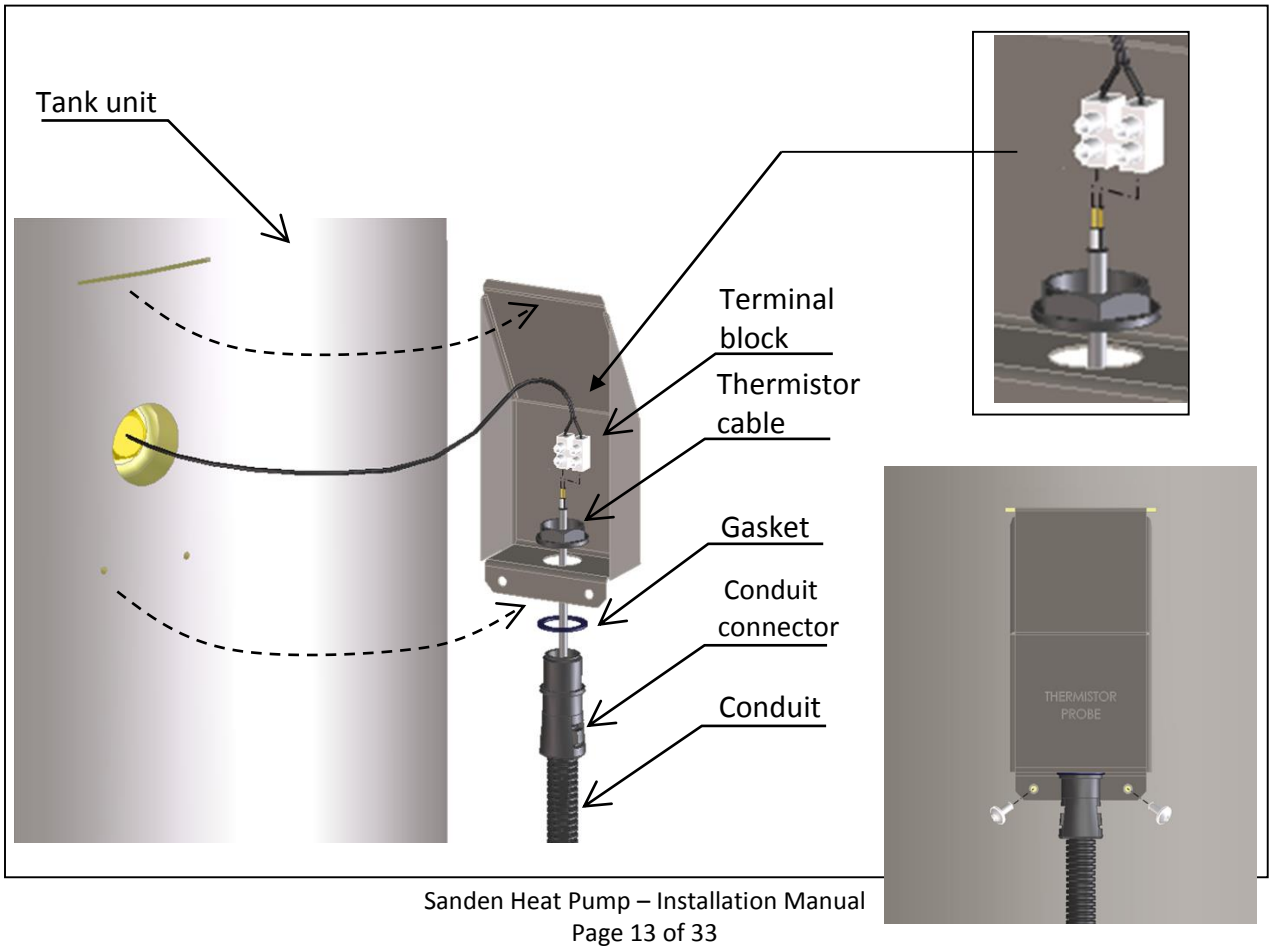

System operation using continuous power

- The system runs its water heating cycle once a day to fill up the storage tank unit with heated water.

- If the blackout time function is selected (setting is covered on Page 19) the unit will not operate during the blackout times – this function is typically used on installations that have time of use electricity tariffs.

- The water heating cycle operation starts automatically when the residual hot water in the tank unit is less than 40 gallons (150 litres)

- The system will not run if the electrical power supply is cut off (i.e. if it is connected to off-peak power). However, the system will automatically start operation, once the electric power is restored

System operation if connected to off-peak electricity

- There are no special settings for the off-peak connection. The system will run once power becomes available and the temperature in the tank drops below the set point of the tank thermistor.

- If connecting the unit to off peak power ensure that the off peak tariff provides a minimum of 5 hours continuous power, as it can take at least four hours to fill the tank unit with hot water.
  If the ambient temperature is lower than 50ºF (10ºC) this can be longer.

- If the unit is connected to off peak power and hot water consumption has been higher than normal, hot water might not be available until the next power supply cycle.

- Daily frequency and amount of hot water consumption may also affect the duration of the heating cycle operation.

Select the electrical supply mode that best suits the customer's hot water consumption. The type of off-peak connection may need to be changed if hot water supply is not maintained as required.

Figure 9: Outline of electrical system connections

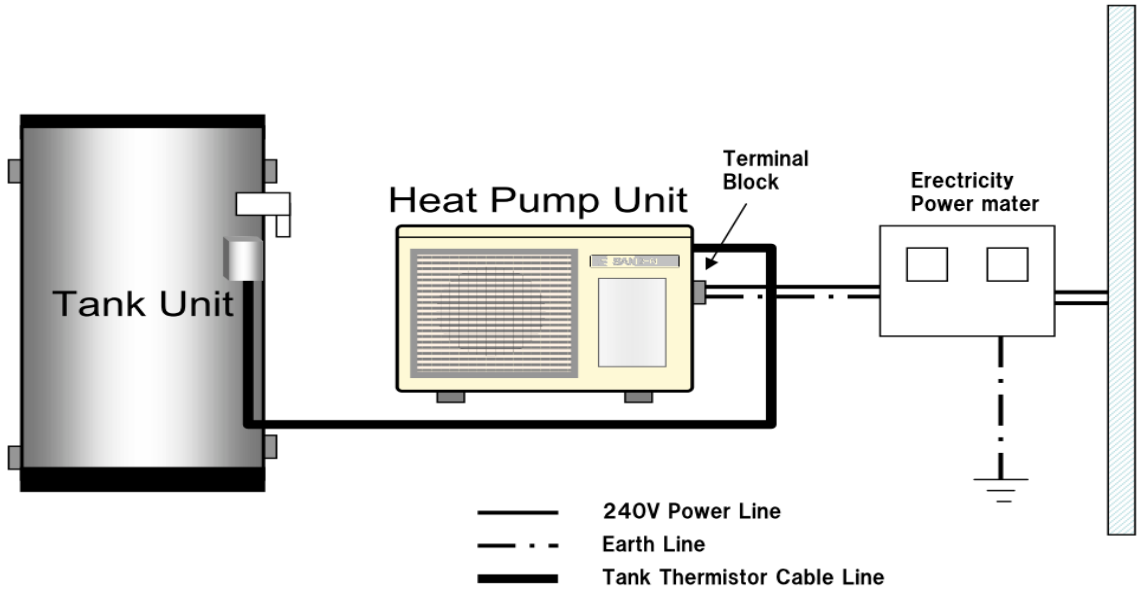

The basic system installation is now complete, the unit is now ready for initial filling, air purge and then start up

Check the Installation against the Installation Check list provided at the end of this manual

Ensure that the work site is tidy; Sanden International recommends the use of Slim Duct or Fortress product to cover water piping on the outside of the house

Filling the System & Purging Air

The following steps must be taken to ensure all air is removed from the system. Incorrect purging of air may cause the water temperature to vary during operation.

- Ensure that all piping to tank unit and heat pump unit are installed and connections are tight, then open the Cold Water Supply Valve to the system
- Push up the lever on the PR valve to open, and fill the tank unit with water. Confirm that water comes out of the relief valve, and then close the lever.
- Open the hot water faucets to remove air from the house piping system.
- Close the faucets after no air is seen in the water.
- Open the water drain plugs (two places) on the heat pump unit. Close the plugs after no air is seen in the water.
- Supply power to the heat pump unit and leave the hot water faucets open for 3 minutes. Close the faucet after no air can be seen in the water.

Figure 7: Air removal process

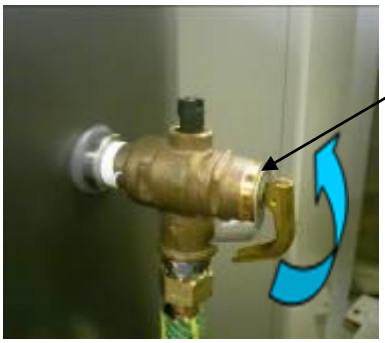

PR valve

Plumb pipes to Storage Tank Unit and Heat Pump Unit.
Push up the lever on the PR valve to open,
and fill in the tank with water.
Confirm the water come out of the relief valve,
and then close the lever.

Water drain plugs

Open the faucet to remove air. Close the faucet after no air bubbles can be seen in the water.

Open the water drain plugs (2 places) on the Heat Pump Unit.
Close the plugs after no air is confirmed in the water supply.

Then connect power to the Heat Pump Unit. Open Faucets.

Freeze protection

- Even if the water pipes have been insulated, the piping can freeze if the surrounding temperature falls below freezing (32ºF). This could cause damage to the equipment and piping so make sure the appropriate freeze protection measures are taken.
- Follow the instructions in the installation manual provided with the freeze protection heat tape.
- After completion of the piping, inspect the plumbing for any water leaks from the joints before installing freeze protection.
- Wrap the freeze protection heater around the pipes, up to the water connectors of the Heat Pump unit.
- Ensure the freeze protection heaters are connected to a 24 hours continuous power supply.
- It is important to fully explain the use and operation of the freeze protection heater to the customer.
- **When turning off the power, because the unit will not be in use, ALL water must be drained from the unit and piping**.

> Note: Heat tape that uses the outside temperature to energize, may not maintain the temperature of the pipes correctly. It is important to use a heat tape that directly senses the pipe's temperature.

Figure 8: Details on wrapping thermal insulation around the piping connector

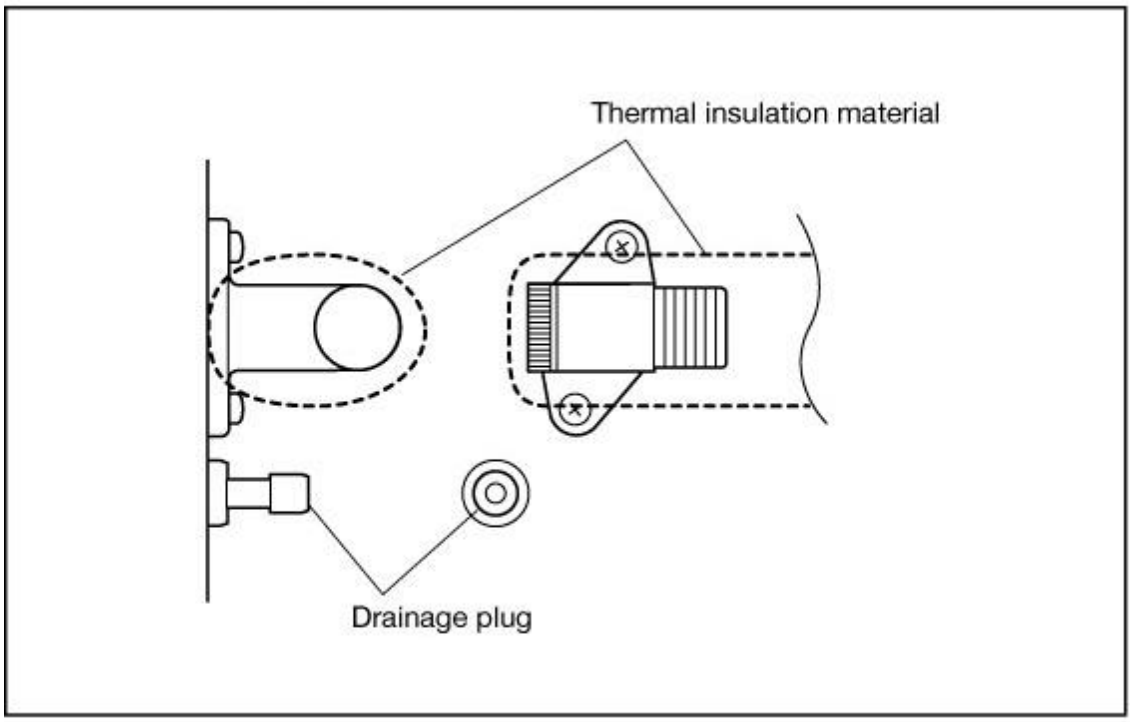

* Do not wrap thermal insulation around the drain plug.

Unit Operation

Time setting and Blackout time setting

Current time setting

This product contains a built-in clock. As a part of the water heating cycle logic refers to the current time, it is necessary to set the clock before starting to use the product. The current time can be set in the Clock Setting Mode as described below.

***Note**

There is no need to adjust the time setting for the daylight saving period. Even if the installation is conducted during the daylight saving period, the clock setting to the ordinary time (not daylight saving time) is preferable.

1. Switching to Clock Setting Mode
   Press the “Enter” key in the Display Mode to switch to the Clock Setting Mode. Time Display starts flashing once the mode is switched.

2. Setting the Clock
   The time setting can be adjusted by pressing “Up” and “Down” keys. Fast forward and rewind are available by pressing and holding down a key.

3. Executing Setting the Clock

After the clock is adjusted to the current time, press the Enter key to execute the setting. The time display stops flashing and comes on once the setting is finished.

*Caution

The display automatically goes back to the Clock Display Mode when no panel operation occurs for more than 60 seconds in the Clock Setting Mode.
If this occurs, changes made will not be reflected to the setting.
If the clock setting is rewound to a time that is earlier than the time when a heating cycle is triggered, the system will start the heating cycle.

*Note

When no panel operation is performed for more than 60 seconds the display switches to the Sleep Mode and turns off.
Sleep Mode is cancelled when Up, Down or Enter key is pressed.

Blackout time setting mode

This mode is used to set the blackout time that stops the heat pump unit operation within the selected time.

Blackout times can be used if the customer has a time of use tariff.

Change the mode

Press and hold down Up and Down keys together in the clock display mode to go to the blackout time setting mode.
Once the mode is changed, ‘bo’ and ‘00XX’ (00 = start time, XX = end time) are displayed. (Initial setting = 00 o’clock for both start and end)

Adjust set blackout start time

Press Up or Down key and ‘00’ (start time) in ‘00XX’ starts flashing and ‘XX’ (end time) illuminates.
Now the blackout start time can be adjusted.
Setting can be changed only in hour increments, not in minutes.

Set blackout start time

Press the Enter key to set the desired time setting.
After the start time is set, the start time display stops flashing.
The end time display will now start flashing.

Adjust blackout end time

Set to the desired end time by using Up and Down keys.
Setting can be performed only in hour increments, not in minutes.

Set blackout end time

Press enter key to adjust the desired time setting.
After the end time is set, the start time and end time are displayed for two seconds, then it starts to alternately display ‘bo’ and ‘00XX’ (00 = start time, XX = end time).

Go back to clock display mode

Press Enter key to go back to the clock display mode. It will automatically go back to the clock display mode when no panel operation is performed for more than 60 seconds.
Blackout time setting mode cannot be set unless the end time setting is executed.

Cancel blackout setting

To cancel the blackout setting, set both start and end times to ‘00’.
Setting to other than ‘00’ (01 ~ 23) will be interpreted as a setting error and the end time will flash.
Make sure to set both times to ‘00’ when cancelling the blackout time setting.

Maintenance Mode

Figure 12 Maintenance mode

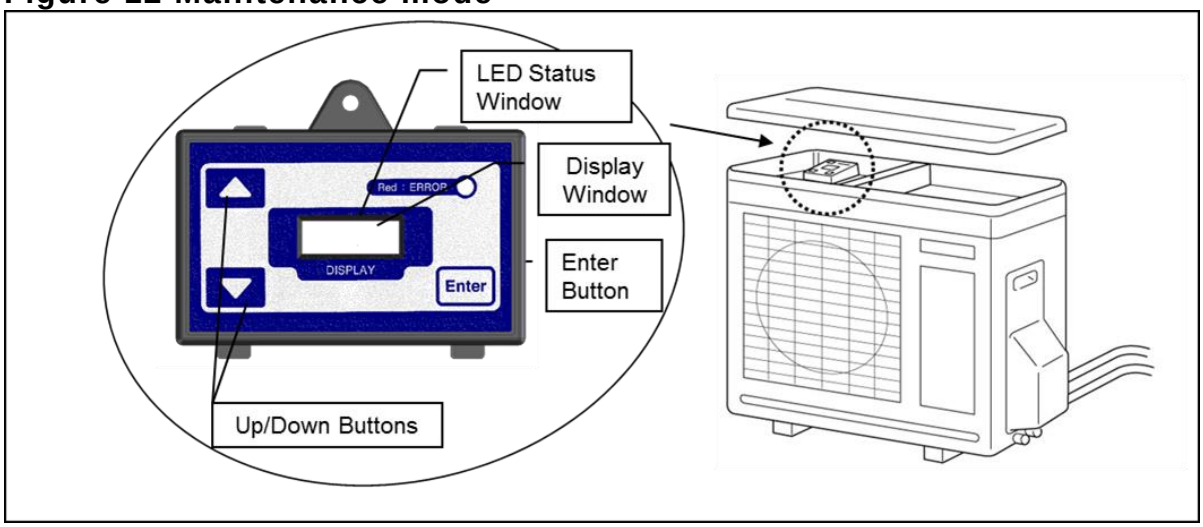

Maintenance mode is a function to check the heat pump unit status and to check and perform other settings. It should generally be assumed that the owner does not operate this function. The following modes can be found in the maintenance mode.

Blackout time setting mode

Set the blackout time.

Error history display mode

Check the history of any errors that may have occurred.

Parameter display mode

Check the values measured by the thermistor.

Drive setting mode:

Switch the heat pump unit on/off.

Compulsory operation mode:

Compulsorily operate the water heating cycle. (Force on)

Pump remote operation mode:

Run the water circulation pump.

How to switch to Maintenance Mode

Press and hold down Up and Down keys together in the clock display mode to go to the maintenance mode.

After the mode is switched, press the Enter key to select a mode from the six modes described above.

To exit maintenance mode, press and hold down the Enter key, or leave for more than 60 seconds with no panel operation.

Figure 13 Maintenance mode diagram

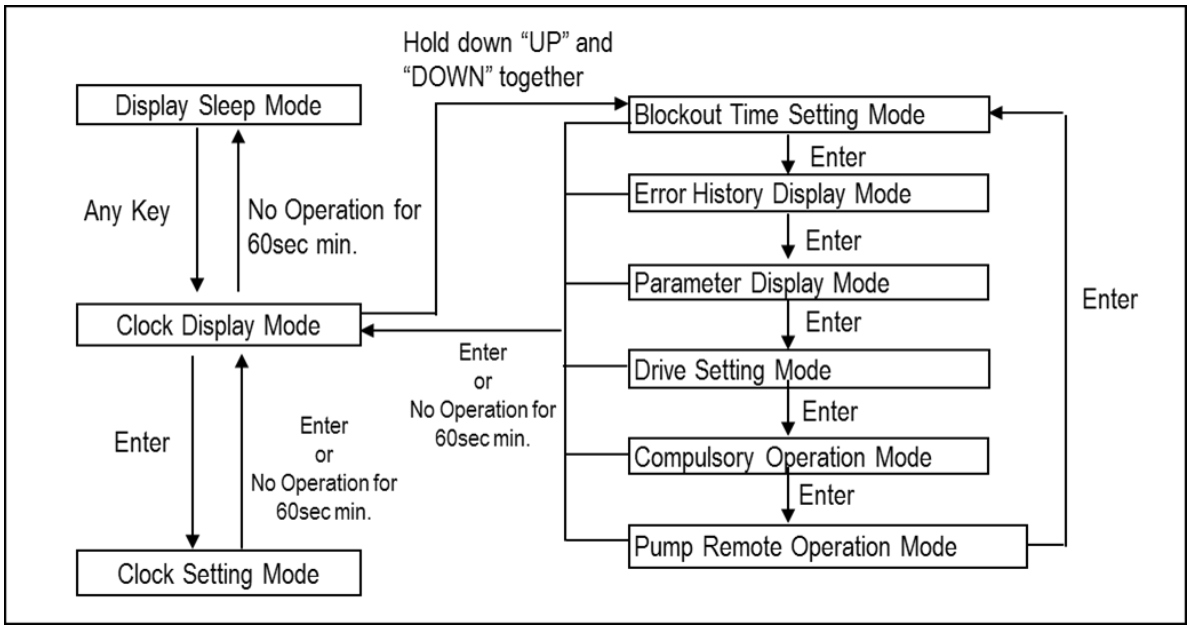

Error Codes

When an error occurs, a red LED on the timer setting panel turns on and an error code is displayed on the LED display. The panel does not return to the display sleep mode while the error code is shown.

After a component is replaced or the inspection is completed, turn the breaker on/off several times for at least 60-120 seconds each time, to confirm the error does not re-occur.

Below is the list of the error codes. If the corrective action does not solve the error problem, a malfunction of the PCB controller is highly likely.

Error code	Error contents	Corrective action
E000	No error generated	

E010	HP inlet temperature thermistor wire break	Check the thermistor connectors on the main PCB in the heat pump unit for any disconnect, fall-off, wire breakage or short circuit – Measure resistance of the thermistor indicated by the error code
E011	HP inlet temperature thermistor short circuit	
E012	HP outlet temperature thermistor wire break	
E013	HP outlet temperature thermistor short circuit	
E014	HP ambient temperature thermistor wire break	
E015	HP ambient temperature thermistor short circuit	
E016	HP defrost temperature thermistor wire break	
E017	HP defrost temperature thermistor short circuit	
E018	HP discharge temperature thermistor wire break	
E019	HP discharge temperature thermistor short circuit	
E020	Tank thermistor wire break	
E021	Tank thermistor short circuit	
E040	HP water outlet over temperature 1	- Check the heat pump piping filter for blockage/debris - Check for any piping bend, blockage or kinking - Inspect for frozen pipes - Ensure mains water supply is available - Ensure all shut off valves are open - If the water circulation pump is not working, replace the pump
E041	HP water outlet over temperature 2	
E042	HP outlet temperature thermistor detection error	- Check if the thermistor is out of the mounting pocket on the water outlet pipe
E043	HP discharge over temperature 1	- Replace the discharge temp thermistor - Reconnect the expansion valve PCB connector, check to ensure connection - Replace the expansion valve (together with PCB), or the entire heat pump unit
E044	HP discharge temperature Thermistor detection error	
E045	HP defrost thermistor detection error	- Check if the thermistor is mounted in position on the evaporator - Replace the defrost thermistor
E047	High pressure side error	- Check the heat pump piping filter for any blockage - Check for any piping bend, blocking or kink

		- Check if the pipes are frozen - Ensure mains water supply is available - Ensure all shut off valves are open - If the water circulation pump is not working, replace the pump
E048	High ambient temperature defrost drive error	- Remove foreign objects from the evaporator coil (e.g. fallen leaves, grass, snow) - Replace the ambient temperature thermistor - Replace the defrost thermistor
E070	Fan motor locked	- Reconnect the connector, check if it is off the PCB - Replace the fan motor
E071	Fan motor revolution error	
E073	Water circulation pump locked	- Check the heat pump piping for blockage or kinking - Confirm that the connector for the water circulation pump is connected to the PCB correctly - Replace the water circulation pump
E090 ～ E150	System control error	Replace the PCB

Notes:

1. After a component is replaced or the inspection is completed, turn the unit on/off several times for a minimum of 60 seconds at a time to confirm the error does not re occur.
2. If the corrective actions above do not solve the error problem, a malfunction of the PCB is most likely.

Water Supply Quality (Supplemental)

Chloride and PH

In areas with a high concentration of chloride in the water, that water can cause corrosion and subsequent failures. Where the chloride level exceeds 9 ounces per 66 gallons (250 mg/litre), the warranty is no longer valid on to the heat pump unit and tank unit.

PH is a measure of whether the water is alkaline or acid. In an acidic water supply, the water can attack the parts and cause them to fail.

No warranty coverage is given on the heat pump unit and tank unit where the PH is less than 6.0.

Supply Water with a PH less than 6.0 may be treated to raise the PH.

It is recommended that an analysis of the Supply Water be conducted before connecting the Heat Pump unit to the system.

Figure 14

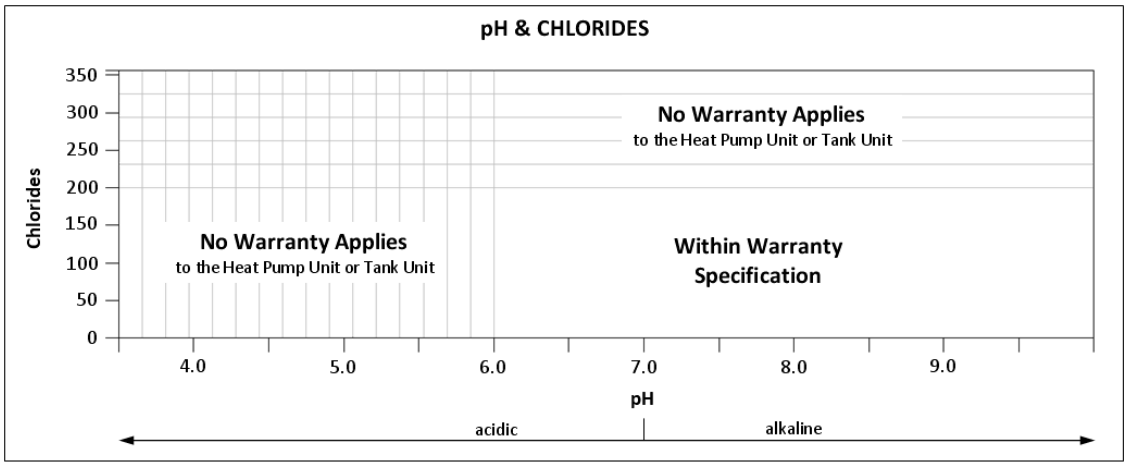

Change of water supply

Changing, or alternating, from one water supply to another can have a detrimental effect on the operation and/or life expectation of the water tank unit cylinder, PR valve, water heating circulation and the heat exchanger in the system.

Where there is a changeover from one water supply to another, for example, a rainwater tank supply, desalinated water supply, public recirculated water supply or water brought in from another supply, then water chemistry information should be sought from the supplier or the water should be tested to ensure it meets the warranty requirements in this installation manual.

Dimensions and Technical Data

Hot water storage tank unit GAU-315EQTE

Storage capacity	83 / 66 gallons
Product weight	154 / 134 lbs
Design pressure	101 PSI (700 kPa)
Storage tank material	Stainless steel
Outside casing	Colour coated zinc steel

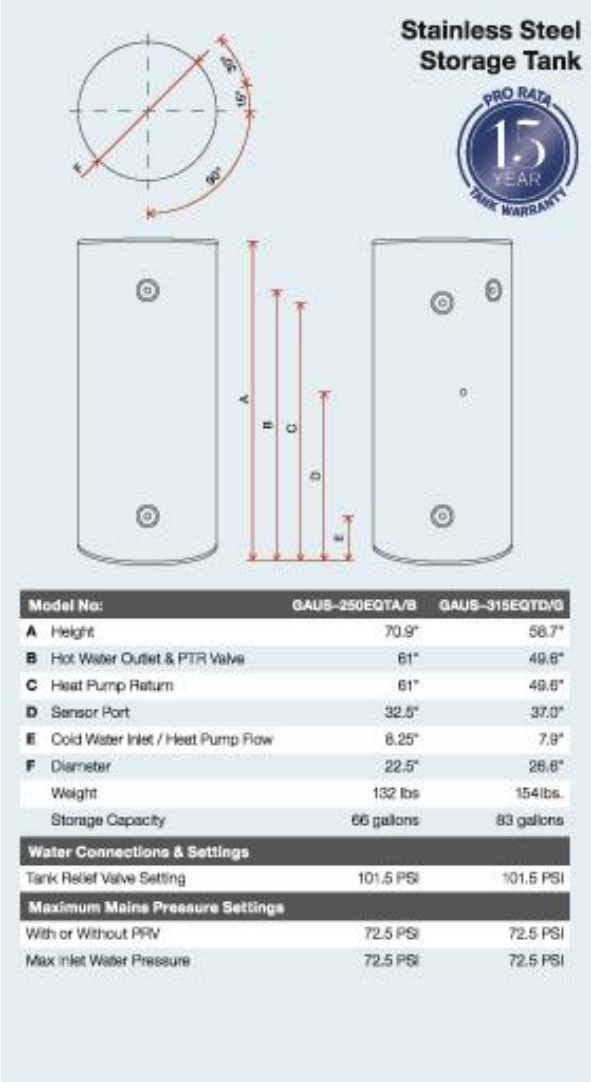

Model No:		GAUS-250EQTA/B	GAUS-315EQTD/G
A	Height	70.9"	58.7"
B	Hot Water Outlet & PTR Valve	61"	49.6"
C	Heat Pump Return	61"	49.6"
D	Sensor Port	32.5"	37.0"
E	Cold Water Inlet / Heat Pump Flow	8.25"	7.9"
F	Diameter	22.5"	26.6"
	Weight	132 lbs	154lbs.
	Storage Capacity	66 gallons	83 gallons
Water Connections & Settings			
Tank Relief Valve Setting		101.5 PSI	101.5 PSI
Maximum Mains Pressure Settings			
With or Without PRV		72.5 PSI	72.5 PSI
Max Inlet Water Pressure		72.5 PSI	72.5 PSI

Heat pump unit GAU-A45HPA

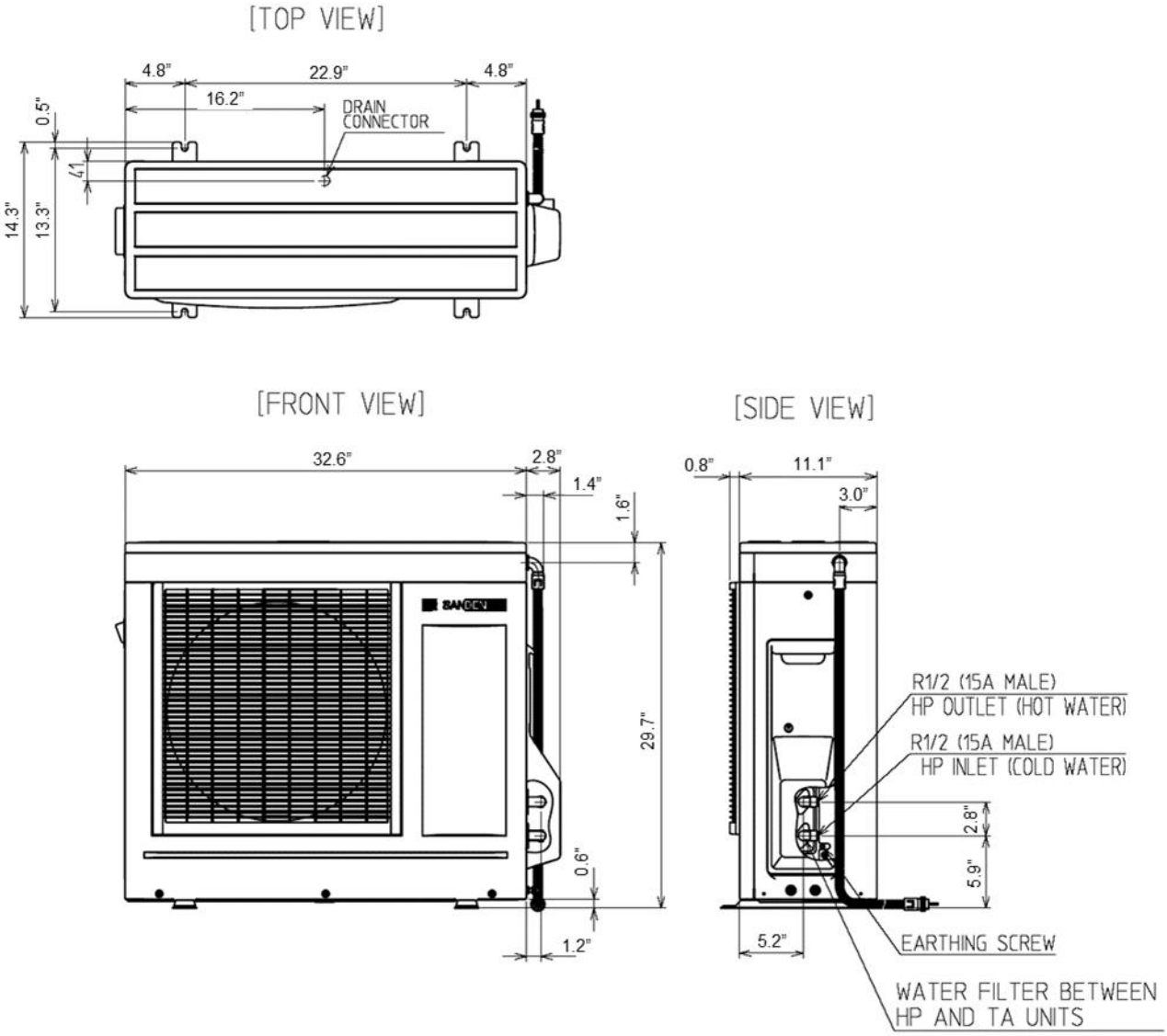

Refrigerant type	R744(CO_2)
Product weight	123lbs/56 kg
Thermal capacity	15,350 Btu/h 4.5 kw *1
Power consumption	1.0 kw *1
COP	4.5 *1
Heated water temp.	149 °F (65 °C)

*1 Ambient temp. (Dry / Wet) 61 °F (16°C) / 63 °F (17°C), Inlet water temps. 63°F (17°C), Outlet water temp. 149°F (65°C)

Wiring Diagram

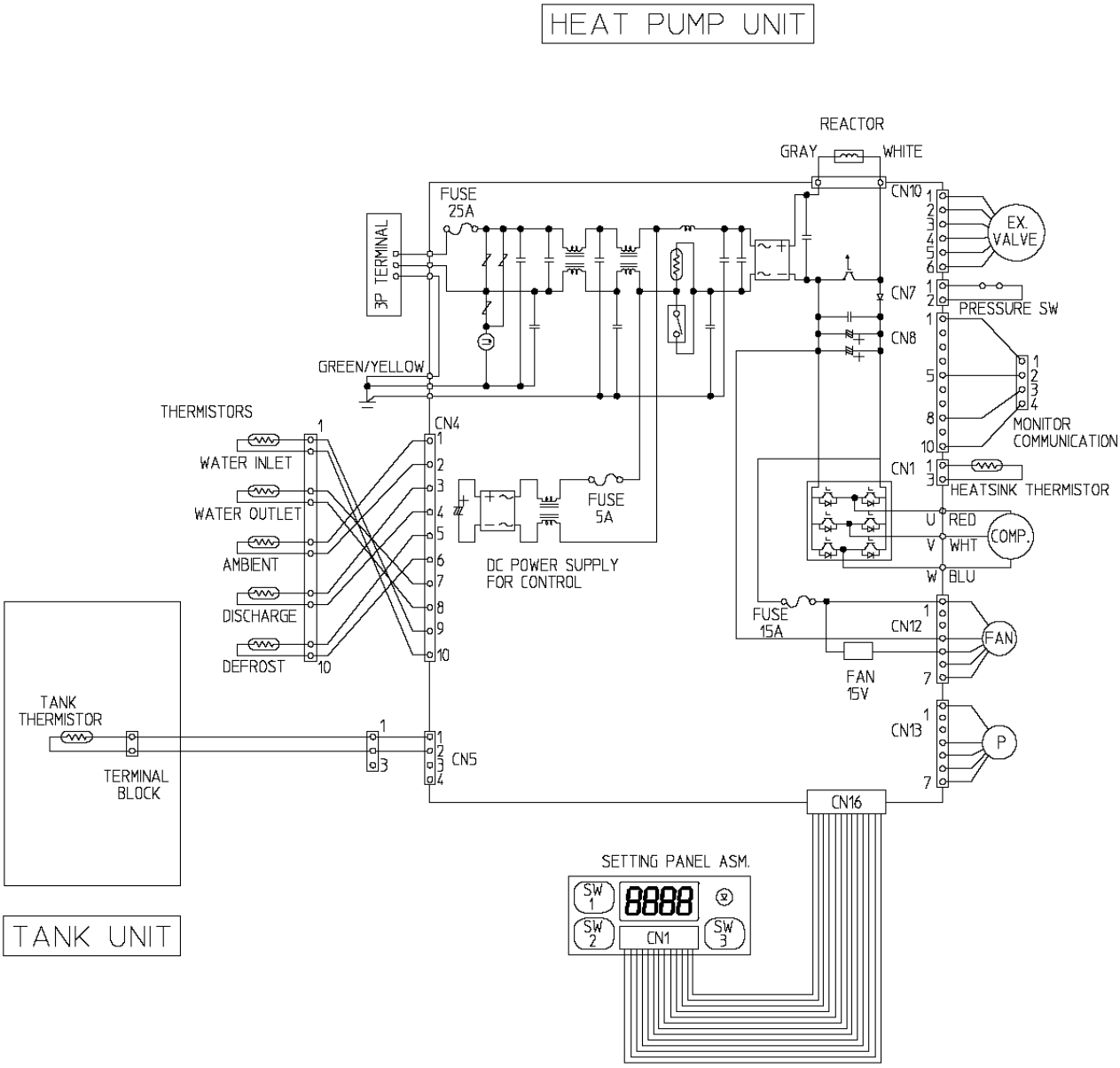

Warranty Policy

Warranty Conditions

1. The Sanden Heat Pump Water Heater System must be installed in accordance with the installation instructions supplied with the Heat Pump Water Heater System, and in accordance with all relevant statutory/local requirements of the state/province/municipality in which the water heater is installed.
2. Where a failed component or Heat Pump Water Heater System is replaced under warranty, the balance of the original warranty period will remain effective. The replaced part or Heat Pump Water Heater System does not carry a new warranty.
3. Where the Heat Pump Water Heater System is installed outside the boundaries of a metropolitan area as defined by Sanden or further than 15 miles from an accredited service agent, the cost of transport, insurance and travelling costs between the nearest accredited service agent's premises and the installed site shall be the owner's responsibility.
4. Where the Heat Pump Water Heater System is installed in a position that does not allow safe, ready access, the cost of accessing the site safely, including the cost of additional materials handling and/or safety equipment, shall be the owner's responsibility.
5. The warranty only applies to the Heat Pump Water Heater System and original or genuine (company) component replacement parts and therefore does not cover any plumbing or electrical parts supplied by the installer and not an integral part of the Heat Pump Water Heater System. Such parts would include pressure regulating valve, isolation valves, check valves, electrical switches, pumps or fuses.
6. The Heat Pump Water Heater System must be sized to supply the hot water demand in accordance with the guidelines in the Sanden Heat Pump Water Heater System literature.
7. This warranty is for parts only, any and all labor costs associated with diagnosis, removal of the faulty part and installation of replacement parts will solely be the owner's responsibility.

Warranty Exclusions

1. Repair and replacement work will be carried out as set out in the Sanden Heat Pump Water Heater System warranty. However the following exclusions may void the warranty and may incur additional service charges and/or cost of parts:
2. Accidental damage to the Heat Pump Water Heater System or any component, including: Acts of God, failure due to misuse, incorrect installation, attempts to repair the water heater other than by a Sanden accredited service agent or the Sanden service department.
3. Where it is found there is nothing wrong with the Heat Pump Water Heater System; where the complaint is related to excessive discharge from the temperature and/or the pressure relief valve due to high water pressure; where there is no flow of hot water due to faulty plumbing; where water leaks are related to plumbing and not the Heat Pump Water Heater System or its components; where there is a failure of electricity or water supplies; where the supply of electricity or water does not comply with relevant codes or acts.
4. Where the Heat Pump Water Heater System or its component has failed directly or indirectly as a result of excessive water pressure.
5. Overflow vent drain has not been installed or blocked or corroded
6. Where the Heat Pump has rusted as a result of a corrosive atmosphere;

Cont

7. Where the unit fails to operate or fails as a result of ice formation in the piping to or from the Heat Pump Water Heater System.
8. Where the Heat Pump Water Heater System is located in a position that does not comply with the Heat Pump Water Heater System installation instructions or relevant statutory requirements, causing the need for major dismantling or removal of cupboards, doors or walls, or use of special equipment to bring the Heat Pump Water Heater System to floor or ground level or to a serviceable position.
9. Repair and/or replacement of the Heat Pump Water Heater System due to scale formation in the waterways or the effects of either corrosive water or water with a high chloride or low PH level when the water heater has been connected to a scaling or corrosive water supply or a water supply with a high chloride or low PH level as outlined in the Owner's Guide and Installation Manual.

   Subject to any statutory provisions to the contrary, this warranty excludes any and all claims for damage to furniture, carpets, walls, foundations or any other consequential loss either directly or indirectly due to leakage from the Heat Pump Water Heater System, or due to leakage from fittings and/or pipe work of metal, plastic or other materials caused by water temperature, poor workmanship or other modes of failure.

Warranty Period

Subject to the Warranty Conditions and Exclusions stated above, your Sanden Heat Pump Water Heater System is warranted as follows:

Heat pump unit – Three years from date of installation

Tank unit – Fifteen years (Pro-rated) from date of installation

Post installation inspection checklist

On completion of the installation, inspect and check off each item in the charts on the following page.

Once the inspection has been completed remove the inspection table and hand to the customer.

Check sheet

Safety items

Action	Completed
Fix the tank unit in place with anchor bolts if necessary.	
The floor below the tank has been properly water proofed and is capable of supporting the tank.	
The mains breaker is of the correct size and voltage Breaker can be turned off, local disconnect in place.	
Ground wiring is installed and tight.	
The Heat Pump unit is installed on a level sturdy surface.	
There are no gas containers or flammable materials anywhere near the unit.	
The wiring between the tank unit and the heat pump unit is properly connected.	

Around units

Action	Completed
A concrete base block is installed (if necessary).	
An inspection space is retained in accordance with the installation manual	

Around the piping

Action	Completed
Dedicated water shut off valves are installed.	
The piping for the water supply/hot water supply pipe has been properly insulated.	
There is no water leaking from the water supply/hot water supply and heat pump pipes.	
In areas subject to snap freezes, protection is provided – Heat Tape, insulation etc	
Union joints are used so that the parts can be easily removed.	
Piping is installed from the drain outlet and drain pan to a building or area where condensate cannot freeze and pose a slip hazard.	
The filter in the pressure-reducing valve is clean.	
Independent pipes, not a twin tube, are used for the heat pump unit pipes.	
The drainage hose from the heat pump unit leads into a building drain or area for disposal.	
Insulation is provided for the water supply/hot water supply and heater pump pipes.	
During draining of the tank unit water does not overflow from the building drain.	

Installed By…… Date……

Inspected By …… Date……

Memo

SECTION 22 35 43
Greywater Heat Exchanger

ecodrain™

www.ecodrain.com
info@ecodrain.com

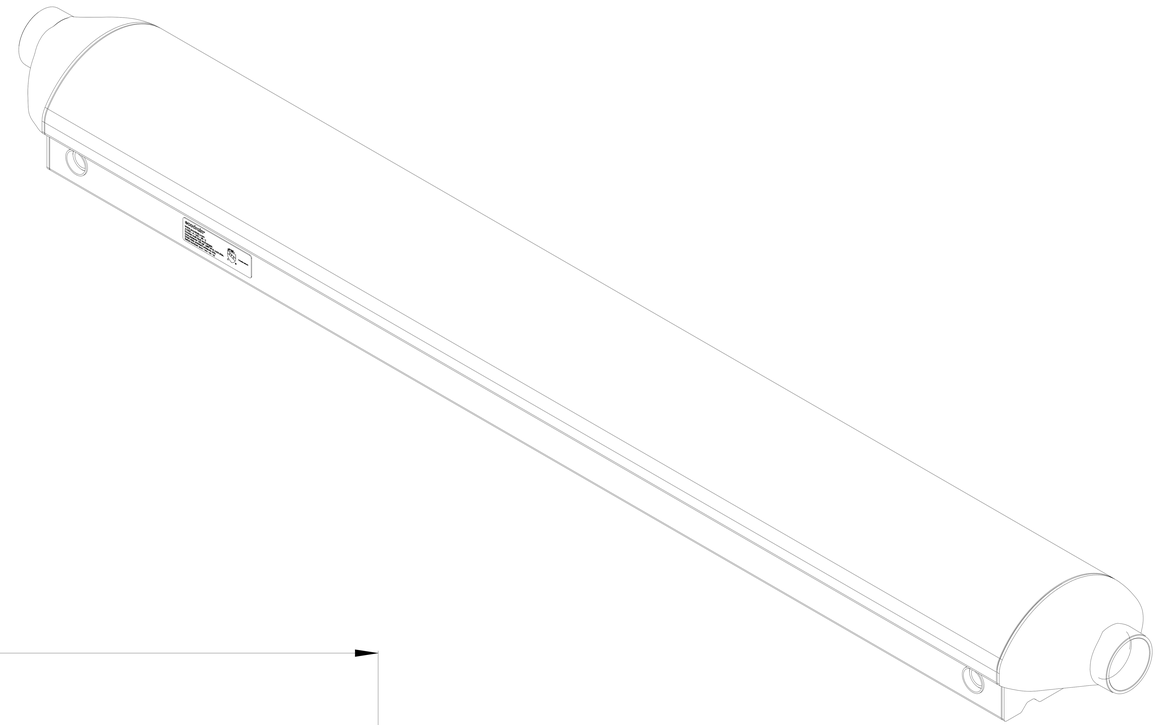

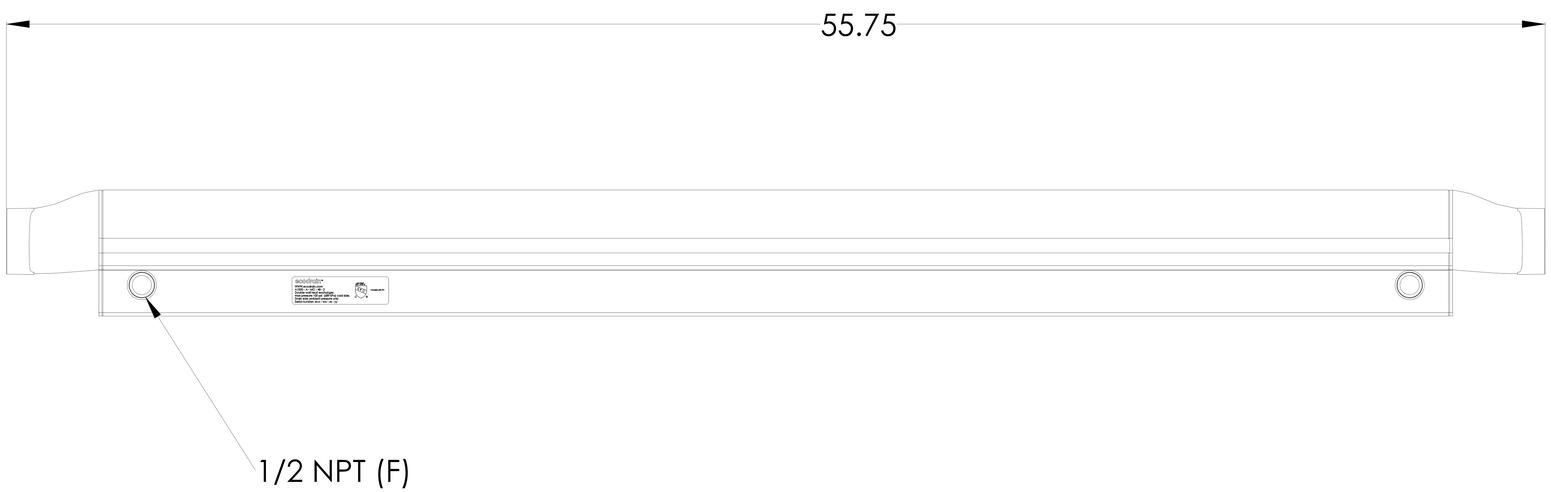

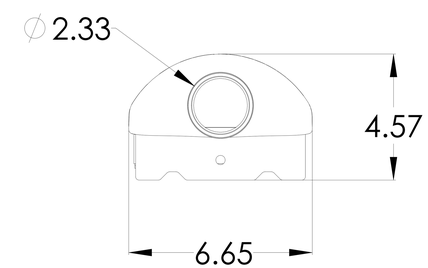

NOTES:
- All dimensions are in inches.
- Drain line connects with ordinary 2" PVC adaptor or fernco connector.

Low lead
NSF / ANSI 61

UPC

C ®

Complies with IPC

ecodrain™

HIGH PERFORMANCE HEAT EXCHANGER

A1000 HEAT EXCHANGER

INSTALLATION MANUAL

Congratulations on your purchase of an ecodrain A1000 drain water heat exchanger. You will soon be enjoying better showers, knowing that you will be saving energy, saving money, and taking longer showers without increasing your carbon footprint.
Ecodrain is the result of extensive research and development and the testing of hundreds of prototypes that has resulted in a device that is safe, simple and effective. Ecodrain complies with the Uniform Plumbing Code, NSF 61 for safe contact with drinking water, and is lead free compliant.
Learn more about how it works on page 2, or skip ahead to page 3 for installation instructions. Waranty information on the last page.

HOW DOES IT WORK?

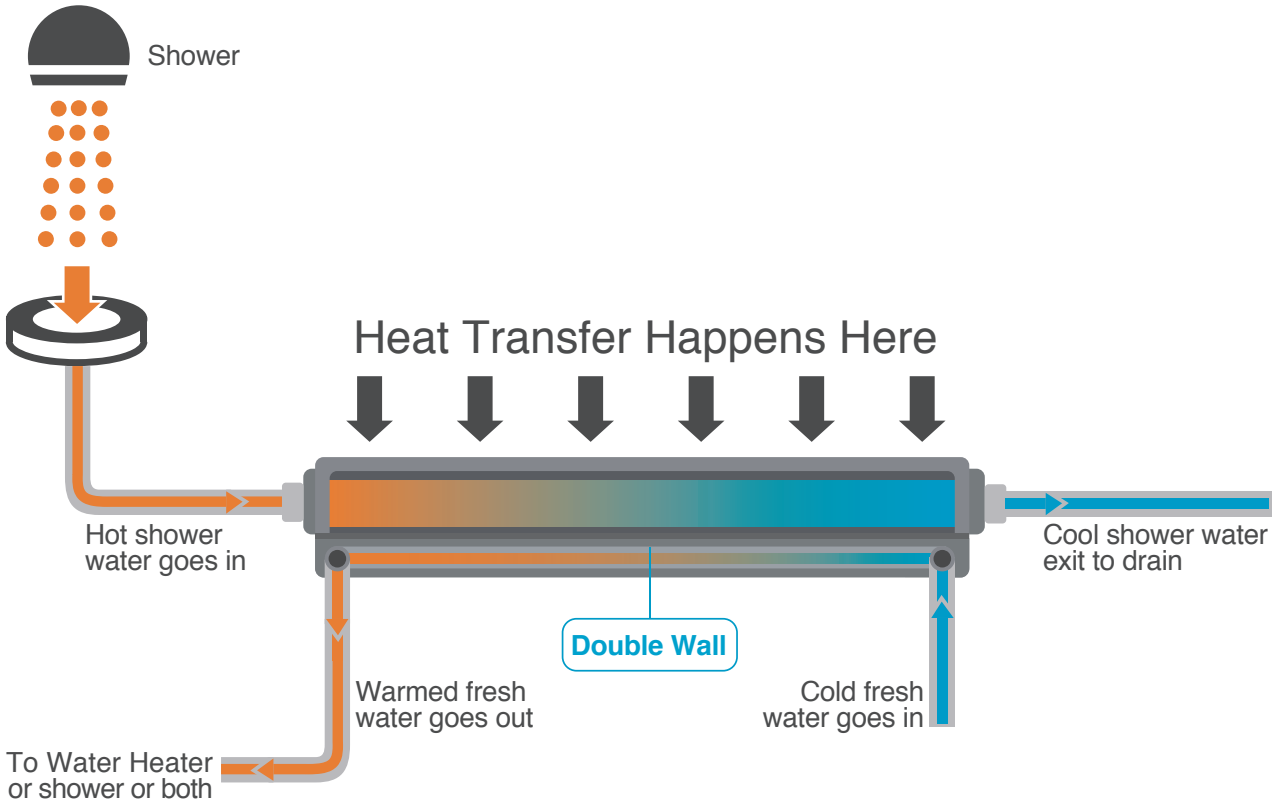

1. In order to take a hot shower, water must be heated.
2. Heating water is energy intensive. It takes 4 times the energy to heat water as it does an equivalent quantity of dry air.
3. Heating water consumes either gas or electricity.
4. Water ends up going down the drain still hot. To appreciate the difference in temperature between the drain water and the cold water, turn the shower valve to full cold and compare how it feels on your feet to the normal temperature at which you shower.
5. When given the opportunity, heat energy always transfers from hotter water to colder water.
6. Ecodrain gives the opportunity for the heat to transfer safely and effciently.

All rights reserved - Ecodrain Inc.

info@ecodrain.com
www.ecodrain.com

The main components of the ecodrain are:

A. An all welded copper heat exchanger which contains the fresh water. The heat exchanger is made from a series of copper pipes, with a manifold welded at each end.

B. A copper plate to protect the copper heat exchanger.

C. A plastic case

D. Plastic end caps.

The copper plate is attached on top of the copper heat exchanger. The attachment allows heat to transfer, but a gap still remains. The copper plate is then sealed into the plastic case and then the end caps seal the case at each end. In operation, drain water flows into the heat exchanger through the end cap, flows over the top plate, and then exits at the other end. Meanwhile, in the separate sealed copper heat exchanger beneath the copper plate, cold water enters at one end, travels inside the copper pipes, and exits at the other end preheated.

DOUBLE WALL WITH ATMOSPHERIC VENT

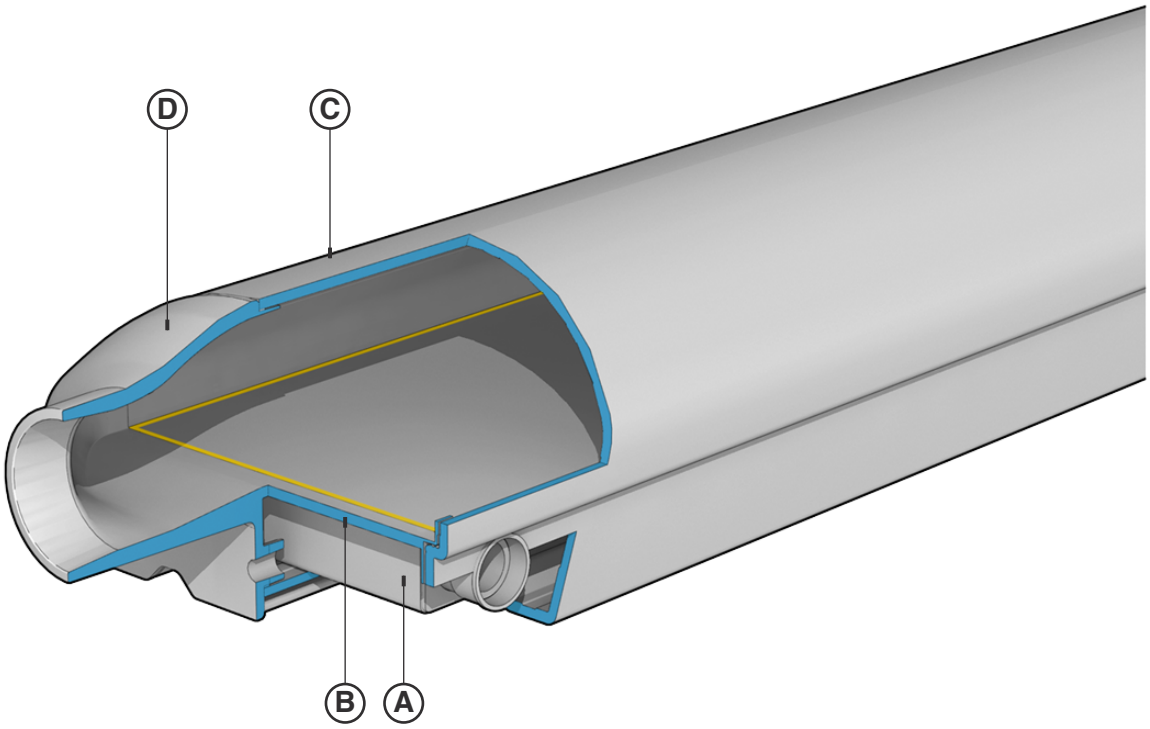

The device has 3 separate chambers:

1. The grey water chamber, made up of the top side copper plate, the top half of the plastic case, and the top half of each end cap.
2. The all welded copper heat exchanger.
3. The vent area made up of the bottom side of the copper plate, the bottom half of the plastic case, and the bottom half of the end caps.

The grey water chamber and the all-welded copper heat exchanger each carry a fluid while the vent area is empty in normal operation. In the unlikely event that the grey water chamber were to leak, it would leak into the vent area.
At each end of the vent area, in the end cap, is an 1/8” npt hole. The downstream vent hole should be connected

All rights reserved - Ecodrain Inc.

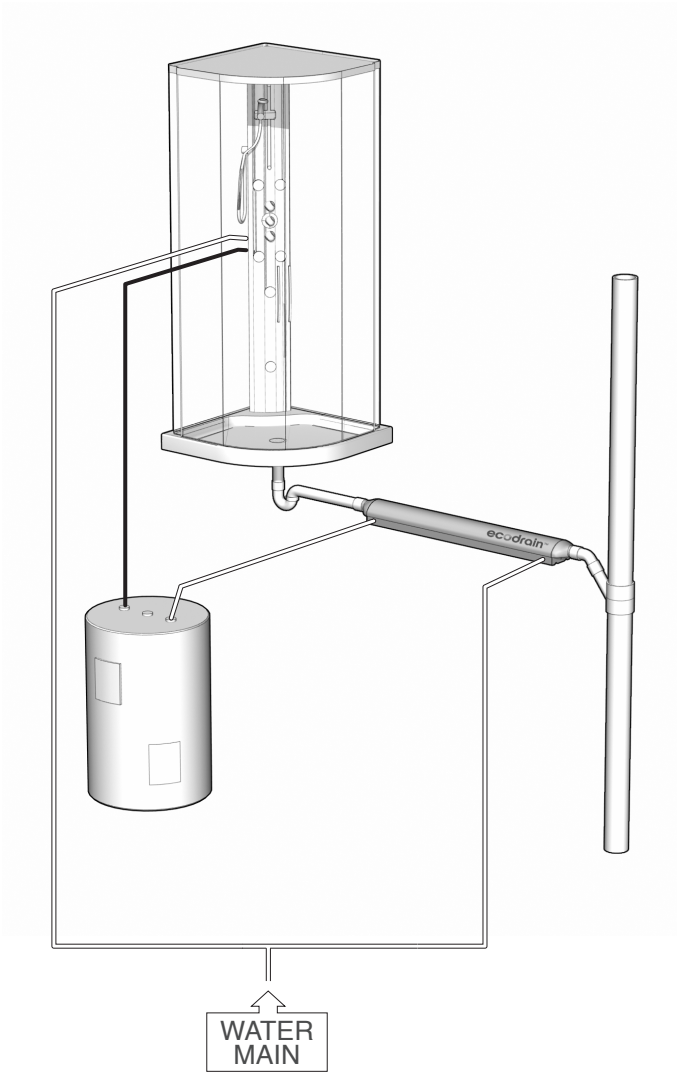

OPTION A

Preheated water connected to input of cold water heater only.

This option is suitable when the heat exchanger is installed in close proximity to the water heater and far away from the fixture. In this case, the flow through the heat exchanger during a shower will be equivalent to the flow of water from the water heater.

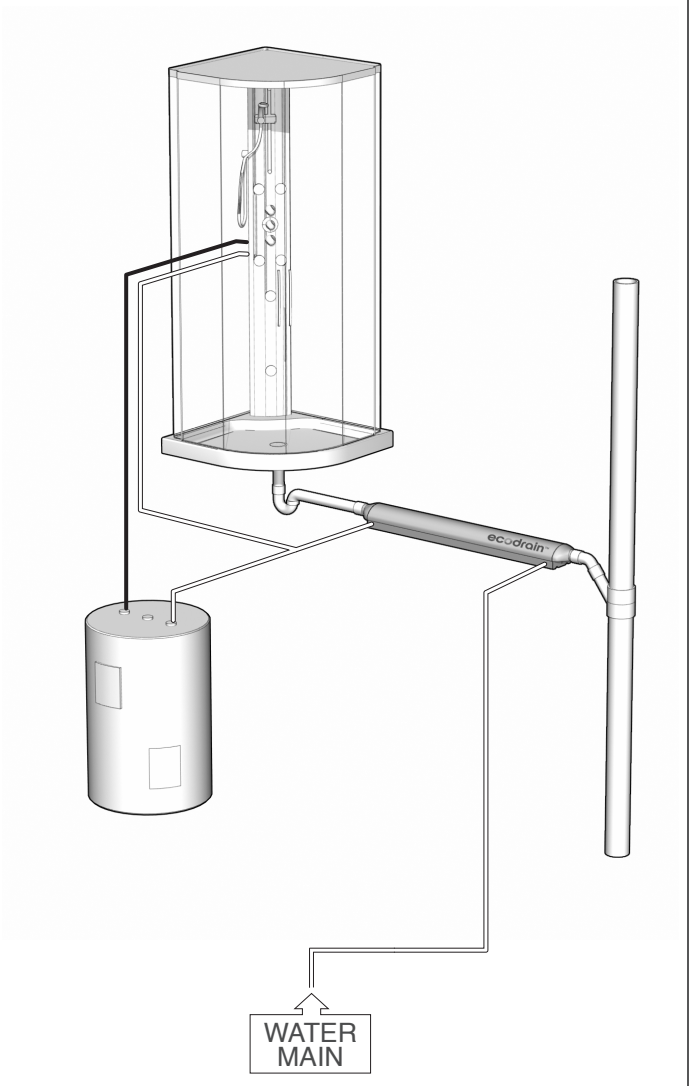

OPTION B

Preheated water connected to input of cold water heater and cold side of shower mixing valve.

This option will provide the most possible savings because it will maximize the cold water traveling through the device. In an ordinary shower, the cold water flow will match the flow of the shower. The higher flow of cold water through the heat exchanger will be heated to a lower temperature than in either of the other two configurations. However, since the flow is higher, the energy savings will increase.

All rights reserved - Ecodrain Inc.

info@ecodrain.com
www.ecodrain.com

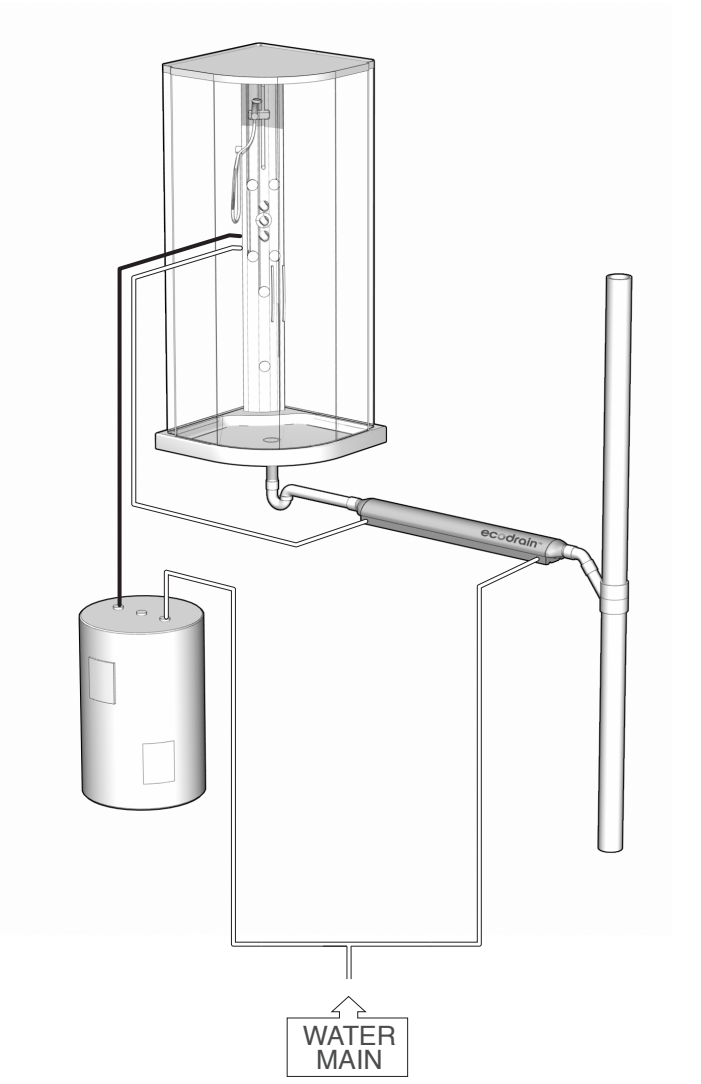

OPTION C

Preheated water connected to cold side of shower mixing valve only.

This option is suitable when the heat exchanger is installed close to the fixture (shower valve) but far away from the water heater. In this case, the preheated water will be supplied to the cold side of a shower valve. The ratio of preheated cold water to hot water will be higher. Since more preheated cold water will be used, less water from the water heater will be required for a shower of equivalent temperature and flow.

LEVEL

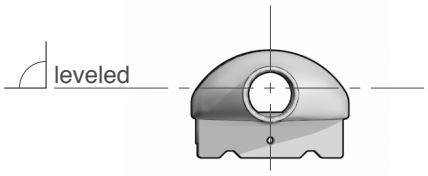

During the installation of the heat exchanger, a spirit level must be used at 3 points minimum along the length of the HE, to ensure proper leveling; otherwise the efficiency will be affected. The HE A1000 cannot be installed at a lateral tilt angle.

COUNTER FLOW DIAGRAMS

The A1000 series heat exchangers are symmetrical in the sense that either drain opening can act as the grey water inlet and either cold water opening can act as the cold water inlet.

For optimal performance,the grey water inlet and cold water inlet should be at opposite ends of the heat exchanger.

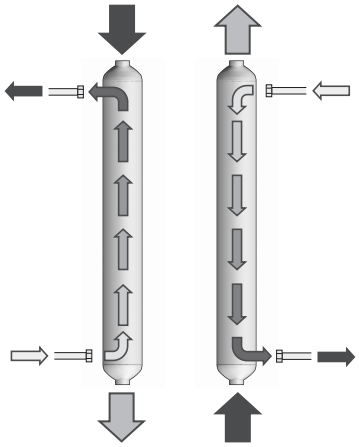

INSTALLATION SLOPE

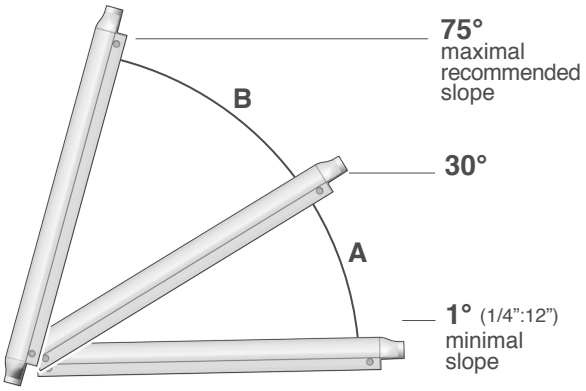

Check with local codes in order to validate the minimum angle required. Note that heat transfer performance will increase as the tilt angle increases. This can boost heat exchanger performance by 5%-10%. The reason is that at a higher tilt angle, the waste water travels faster.
This generates turbulence in the waste water flow and as a result the waste water gives off heat at a higher rate. With the A1000 unit, a maximum slope of 75° is recommended to allow an efficient heat transfert. Beyond that slope, some of the grey water will travel down the center of the exchanger and will have reduced contact with the heat transfer tubes.

All rights reserved - Ecodrain Inc.

Remove Heat Exchanger from packaging and ensure there are no damages, no dents on the cover and the end caps at the ends are still intact. If the heat exchanger is damaged, please contact the distributor. Prior to installing the heat exchanger, run water from a garden hose through the heat exchanger drain connections and using clean white tissue paper or lint free cloth run it past the joint of the bottom and top covers of the heat exchanger, to ensure that during storage or transit there has been no damage resulting in leakage in the joint area. If the paper gets wet at any specific point along the joint, the Heat Exchanger should not be installed.

Review the installation schematics and decide how you wish to install it. Review the installation manual for minimum and maximum slope angles.

It is recommended to support the heat exchanger either at both ends or continuously along its ends. The heat exchanger is not supplied with supports.

After installation, and curing of any adhesive (if used-follow manufacturer's instructions) run drain water for a few minutes through the heat exchanger and once again ensure that there is no leakage at the joints, in the piping connection.

The heat exchanger comes with a 1/8” NPT leak off connecter, on either side, used to prove the leak path access of the double wall heat exchanger. It is advisable to plug the upper leak-off hole using the supplied plug. It is advisable to connect a transparent tube to the lower leak-off hole. The tube should be connected such that the user has access to it at some point so that it is possible to verify that there is no leakage.

INSTALLATION PROCEDURE

STEP A - VISUAL INSPECTION

Run water through Heat Exchanger to ensure that unit is leak-tight and that no damage occured during shipping.

Please note which side of the unit the water will be connected.
This will determine the inlet/outlet for the grey water.

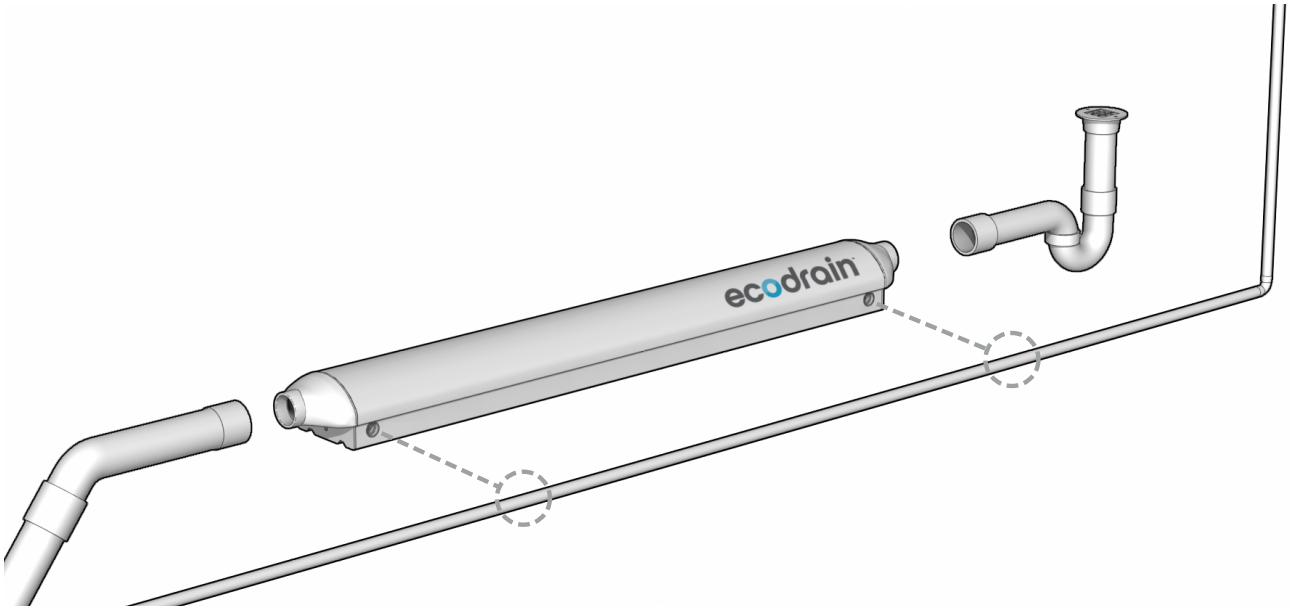

All rights reserved - Ecodrain Inc.

info@ecodrain.com
www.ecodrain.com

STEP B

Mount grey water adaptor for both inlet and outlet.

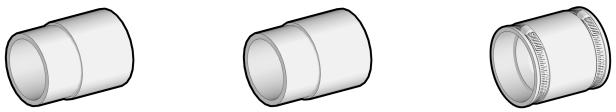

1. ABS adaptor **2.** PVC adaptor **3.** Mechanical clip

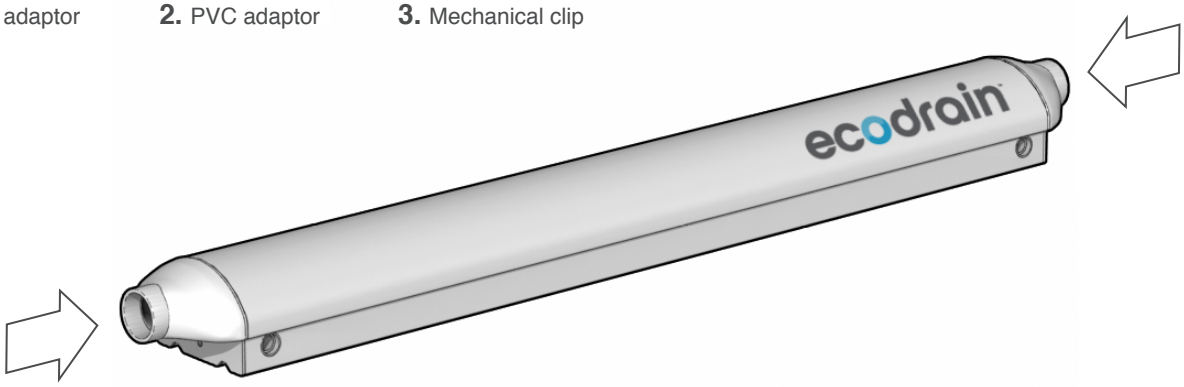

STEP C

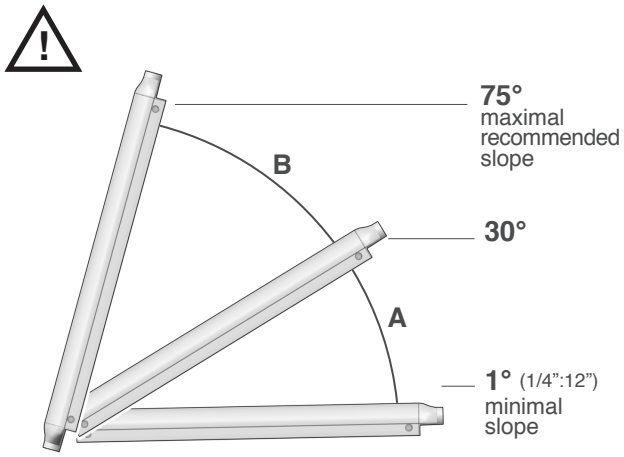

Fig 1.1

Minimal slope requirement:

In order to insure optimal perfomance.
The unit must be installed with a minimal slope (fig 1.1).
With the A1000 unit, a maximum slope of 75° is recommended to allow an efficient heat transfert.

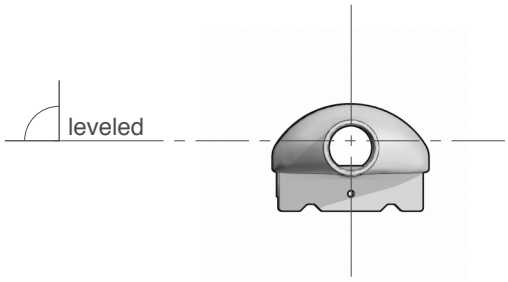

Fig 1.2

Remember :

The HE A1000 cannot be installed at a lateral tilt angle.
Level horizontally (fig 1.2).

All rights reserved - Ecodrain Inc.

info@ecodrain.com
www.ecodrain.com

STEP D

1. Insure proper drain connection to unit.
2. Connect water inlet + outlet to heat exchanger.

Do not test connection yet.

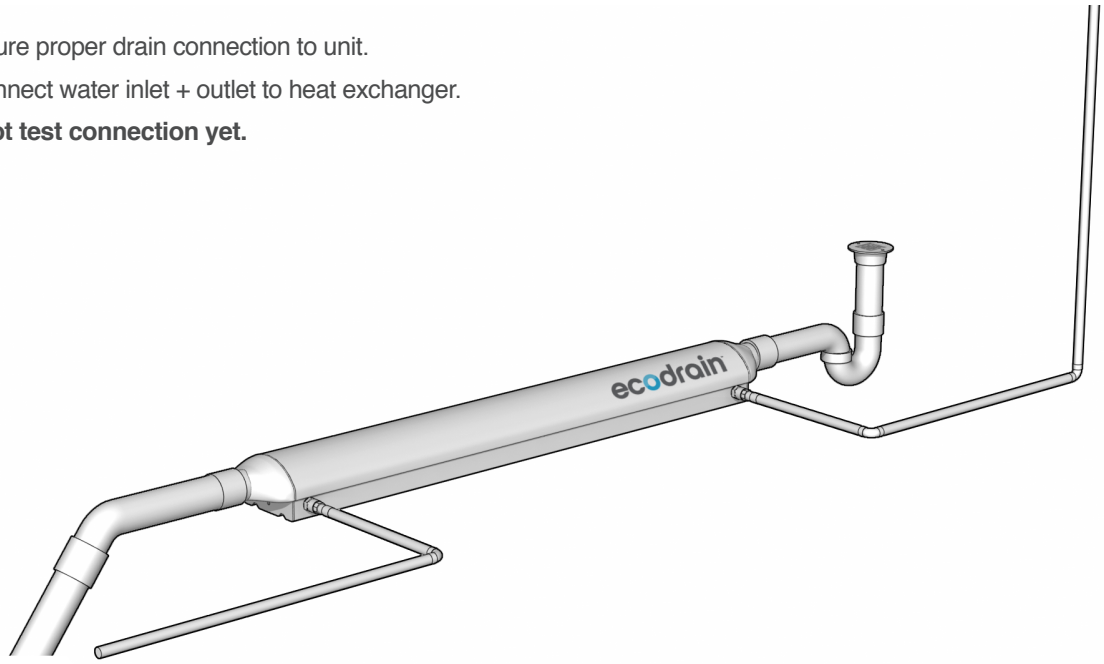

STEP E

⚠ Before testing all connections, make sure unit is secured.
Note that a working unit at full capacity could weigh up to 30lbs (14 kg).

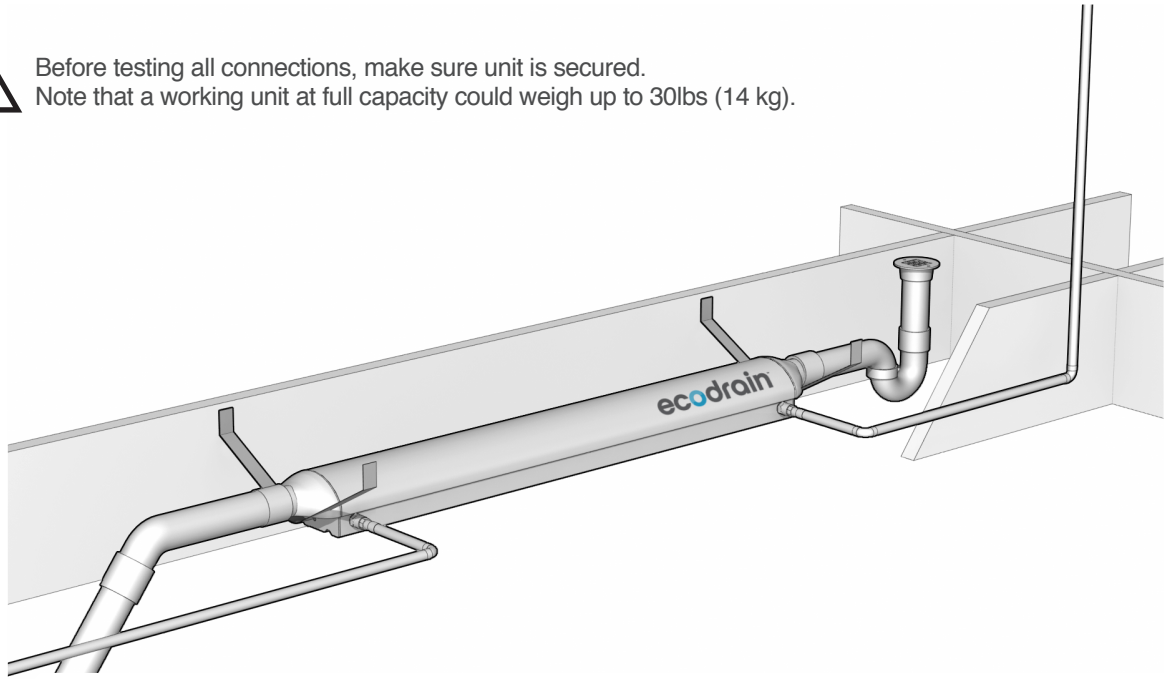

All rights reserved - Ecodrain Inc.

SECTION 22 41 00

Shower Head, Hose, and Handle

SECTION 22 41 13

Water Closet - Floor Mount

Starck 3 Toilet floor standing # 2158590000 |< 14 5/8“ X 24 3/8“ Inch >|

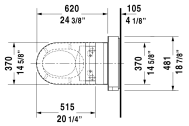

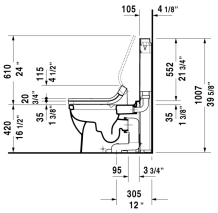

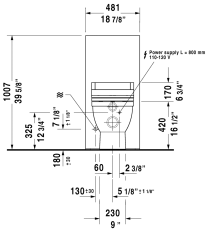

Toilet floor standing	Dimension	Weight	Order number
US-version for Geberith Monolith, washdown model, only in combination with SensoWash, Comfort height 16 1/2", elongated, connecting elements for SensoWash with concealed connections included, cUPC listed, horizontal outlet, hardware included			
Colors			
00 White			
Variant			
	14 5/8“ X 24 3/8“ Inch	71.6 lb	2158590000
Text for invitation of tenders			
Only in combination with Geberit Monolith Art. No. 131.126.SF.1 (white), Art. No. 131.126.SG.1 (black) and Geberit S-bend for US Art. No. 131.127.29.1			
Sanitary ceramics with the special WonderGliss surface finish will remain clean and attractive-looking for a long time to come. When ordering WonderGliss please add a "1" as eleventh digit to the model number.			

All drawings contain the necessary measurements which are subject to standard tolerances. They are stated in inch & mm and are non-binding. Exact measurements, in particular for customized installation scenarios, can only be taken from the finished ceramic piece.

SECTION 22 41 16
Lavatory - Wall Mounted

Vero Furniture handrinse basin # 070350 |< 19 5/8" Inch >|

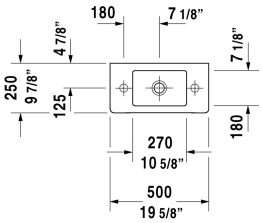

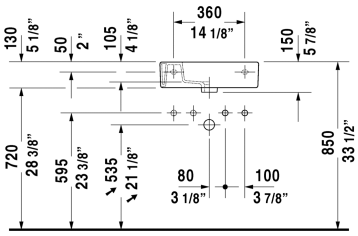

Furniture handrinse basin	Dimension	Weight	Order number
with overflow, cUPC listed, with tap platform, wall mounted, hardware included, 19 5/8" Inch			
Colors			
00 White			
Variant			
Sanitary ceramics with the special WonderGliss surface finish will remain clean and attractive-looking for a long time to come. When ordering WonderGliss please add a "1" as eleventh digit to the model number.			
Space-saving siphon	1 1/4" Inch	0.9 lb	005073
Suitable products			
Vanity unit wall-mounted 1 door, for Vero # 070350 (not ground), 17 3/4" x 8 7/8" Inch	17 3/4" x 8 7/8" Inch		KT6629 L/R
Vanity unit wall-mounted 1 door, for Vero # 070350 (not ground), 17 3/4" x 9" Inch	17 3/4" x 9" Inch		XL6208 L/R
Vanity unit wall-mounted 1 door, for Vero # 070350 (not ground), 17 3/4" x 8 1/4" Inch	17 3/4" x 8 1/4" Inch		VE6270 L/R

All drawings contain the necessary measurements which are subject to standard tolerances. They are stated in inch & mm and are non-binding. Exact measurements, in particular for customized installation scenarios, can only be taken from the finished ceramic piece.

SECTION 23 09 13

Indoor Temp. and Humidity Sensors

ecobee3

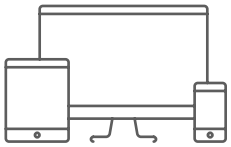

The smarter wi-fi thermostat with remote sensor

Ordinary thermostats read the temperature in only one room, but are supposed to deliver comfort in all rooms. ecobee remote sensors deliver the right temperature in the rooms that matter most.

Average 23% savings

Homeowners are spending hundreds of dollars a year on heating and cooling their homes, often when they're not even there to enjoy it. ecobee delivers comfort when they're home and savings when they're not, resulting in an average 23% savings* year after year.

Reliable technology

ecobee is hard-wired for reliability and has been since 2009 when we created the world's first wi-fi smart thermostat. Unlike some competitors, we don't use power stealing because it is unreliable.

Anytime, anywhere

Monitor and control your wi-fi connected ecobee3 anytime, from anywhere, on your smartphone, tablet, or computer.

Live weather

Start your day with live weather and a preview of the days ahead with a 5-day forecast.

Free remote sensor

ecobee3 comes with one free remote sensor and can support up to 32. The sensors measure temperature and occupancy allowing the thermostat to balance the temperature in your home so that it is comfortable in the rooms they are actually in and not just the hallway.

Easy installation

Our streamlined process and auto-detection features make installation easier than ever. Average install times will be less than 45 minutes.

Box contents

- ecobee3 Thermostat
- Remote Sensor with detachable stand
- Power Extender Kit
- 2 trim plates (small and large)
- Quick Start Guide
- Installation Guide with wire labels
- Mounting screws and drywall plugs
- Double-sided adhesives

MSRP

$249.00

Available online

ecobee.com
amazon.com

For professional installation

To find an installer in your area, call ecobee Support at 1.877.932.6233

*Learn more at ecobee.com/Savings

ecobee3

1. System mode (heat/cool/auto/off)
2. Indoor humidity
3. Indoor temperature
4. Motion sensor
5. Menu
6. Live weather
7. Quick changes
8. Slider to adjust temperature

SPECIFICATIONS

Thermostat dimensions

Height:	3.93 in / 100 mm
Width:	3.93 in / 100 mm
Depth:	0.9 in / 22 mm

Sensor dimensions

Height:	1.7 in / 44 mm
(with stand)	2.2 in / 54 mm
Width:	1.7 in / 44 mm
Depth:	0.8 in / 20 mm

Display

3.5” full-color LCD touch screen
320 x 480 pixel display

Connectivity & security

- 802.11 b/g/n wireless routers
- WEP 64, WEP 128, WPA and WPA2 encryption methods

Compatibility

ecobee3 is compatible with 95% of residential heating and cooling systems in North America. To ensure ecobee3 will work in your home, please visit ecobee.com/Compatibility

Compatible with:

- Conventional (2H/2C)
- Heat pump (4H/2C) incl. 2-stage auxiliary heat
- Gas, oil, electric
- Dual fuel
- Humidifier, dehumidifier, ventilator, HRV or ERV

Warranty

3-year warranty

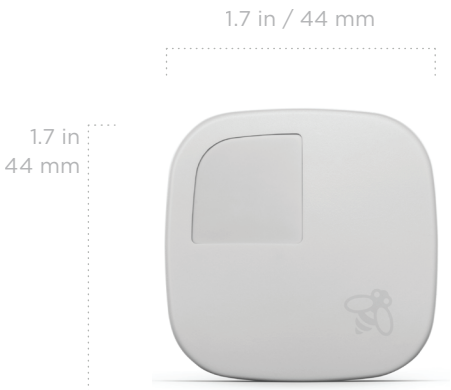

Remote Sensor, front

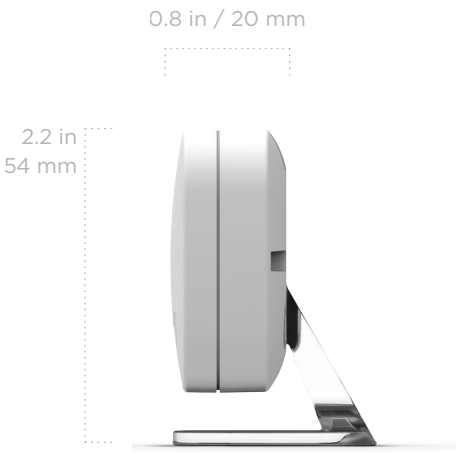

Side, with stand

Installation guide

ecobee3

Welcome!

If you have questions, we have answers.
Visit **ecobee.com/Support/ecobee3** for tutorials, how-to videos and FAQs.

Technical support is also available by email or by phone:
support@ecobee.com
1.877.932.6233 (North America)
1.647.428.2220 (International)

Compatible systems

ecobee3 works with most centralized residential heating and cooling systems.

Heating:	up to 2 stages
Cooling:	up to 2 stages
Heat pumps:	1 or 2 stages + up to 2 stages auxiliary heat
Accessories:	Dehumidifier, humidifier or ventilation device

Items included in box

A ecobee3 thermostat with back plate and trim plate
B Remote Sensor and stand
C Power Extender Kit (optional)
D Large trim plate
E Screws and drywall plugs
F Information booklets
G Double-sided adhesives

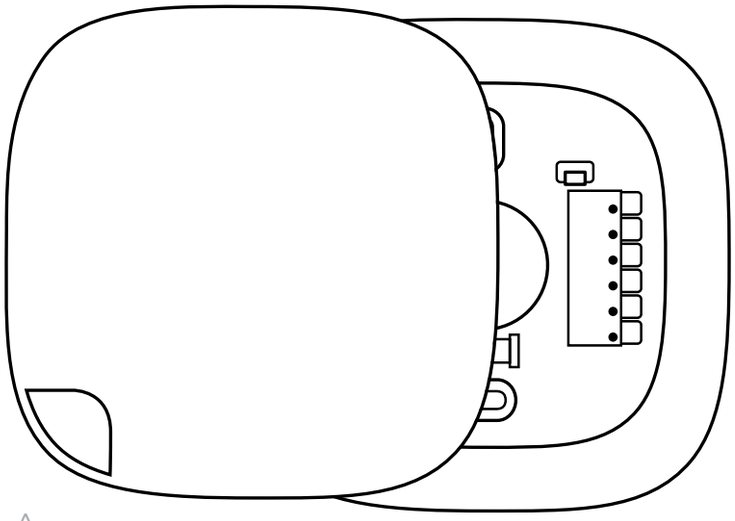

A

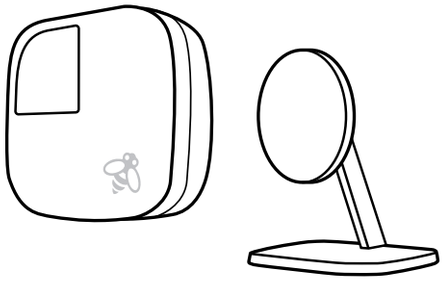

B

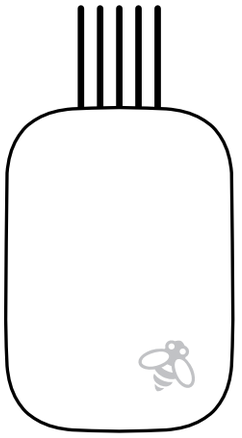

C

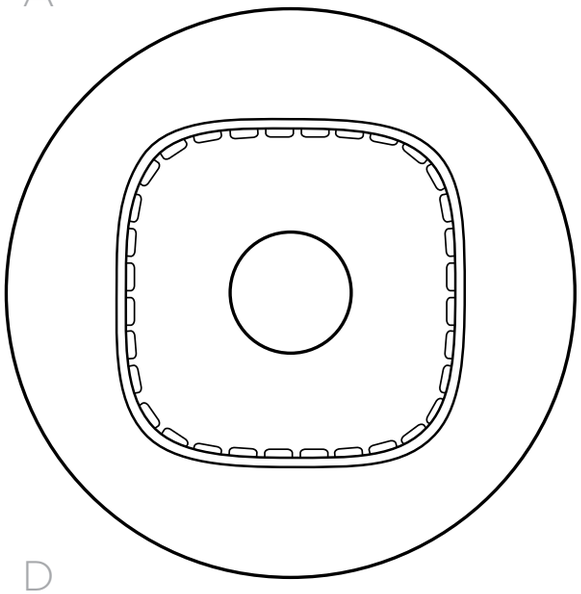

D

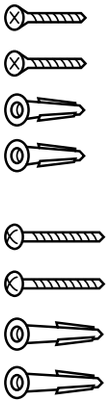

E

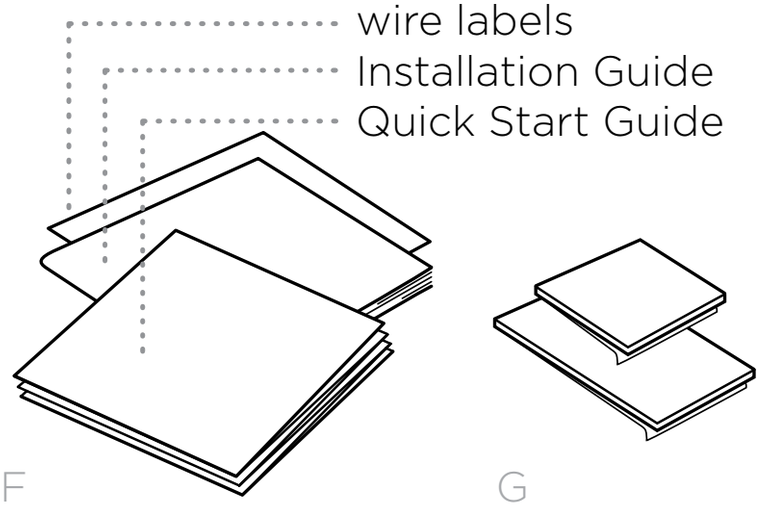

F

G

Items you'll need

A Phillips screwdriver
B Drill for mounting anchors with $\frac{3}{16}$ inch drill bit

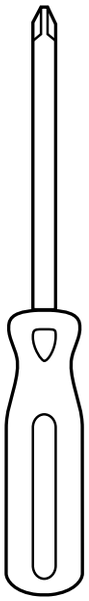

A

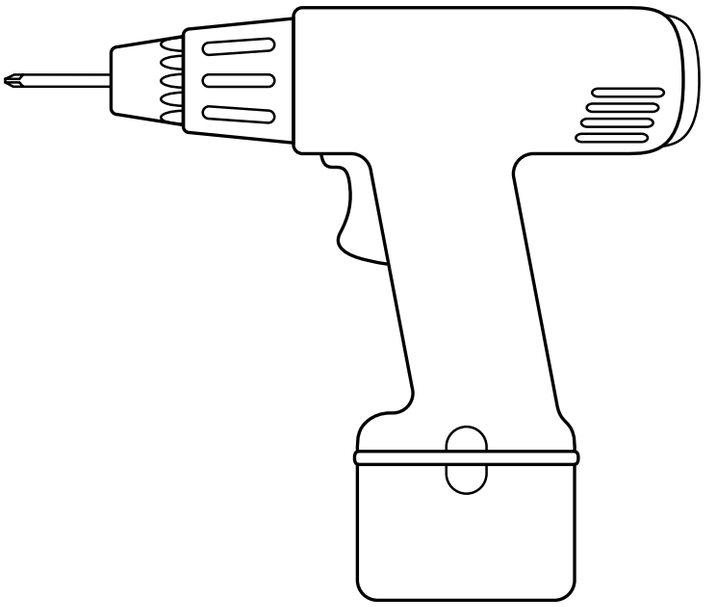

B

Tip: *Review all the instructions before you start to ensure that there are no surprises during installation.*

Tip: *For accurate temperature readings, install your ecobee3 in a conditioned space, on an interior wall, and away from direct heat sources.*

Overview of steps

Installing your ecobee3 home climate system is easy. Just follow these steps and you'll be done before you know it.

Step 1 **Power off your HVAC system**
page 8
Before doing anything else, power off your system.

Step 2 **Label the wires**
page 9
Label each wire with the provided stickers.

Step 3 **Install Power Extender Kit**
page 11
The PEK is not required for all installs. If you have a wire labelled "C" or "common", skip to step 4.

Step 4 **Attach back plate to wall**
page 14
Secure the back plate to your wall with the provided screws.

Step 5 **Connect wires to ecobee3**
page 16
Use the stickers from step 2 as a guide and insert the wires into ecobee3 terminal blocks.

Step 6 **Power on your HVAC system**
page 18
Power back on your HVAC equipment. Your ecobee3 will automatically power on and guide you through setup.

Step 7 **Install remote sensor**
page 19
Stand in front of your ecobee3 and pull the plastic tab on the remote sensor to automatically connect it to your thermostat.

Terminal descriptions

G	Fan
Rc	Cool transformer
Rh	Heat transformer
O/B	Heat pump reversing valve
Y	Y1, Y2: Used for 1 - 2 stages of conventional A/C or 1 - 2 stages of heat pump compressor
W	W1, W2: Used for 1 - 2 stages of conventional heat or 1 - 2 stages of auxiliary heat with heat pump
C	24VAC common
ACC	Accessory (+/-): Used for dehumidifiers, humidifiers, ventilators, HRVs or ERVs

Warning! *ecobee3 is designed for 24VAC with a 2A maximum current. Do not connect it to line (high) voltage or millivolt systems.*

Step 1. Power off your HVAC system

Before doing anything else, power off your system. If your HVAC equipment doesn't have a master switch, go to your circuit breaker box and turn off the breaker.

Verify that the equipment is off by attempting to adjust the temperature your existing thermostat. The thermostat will show the temperature change but your cooling or heating should not come on.

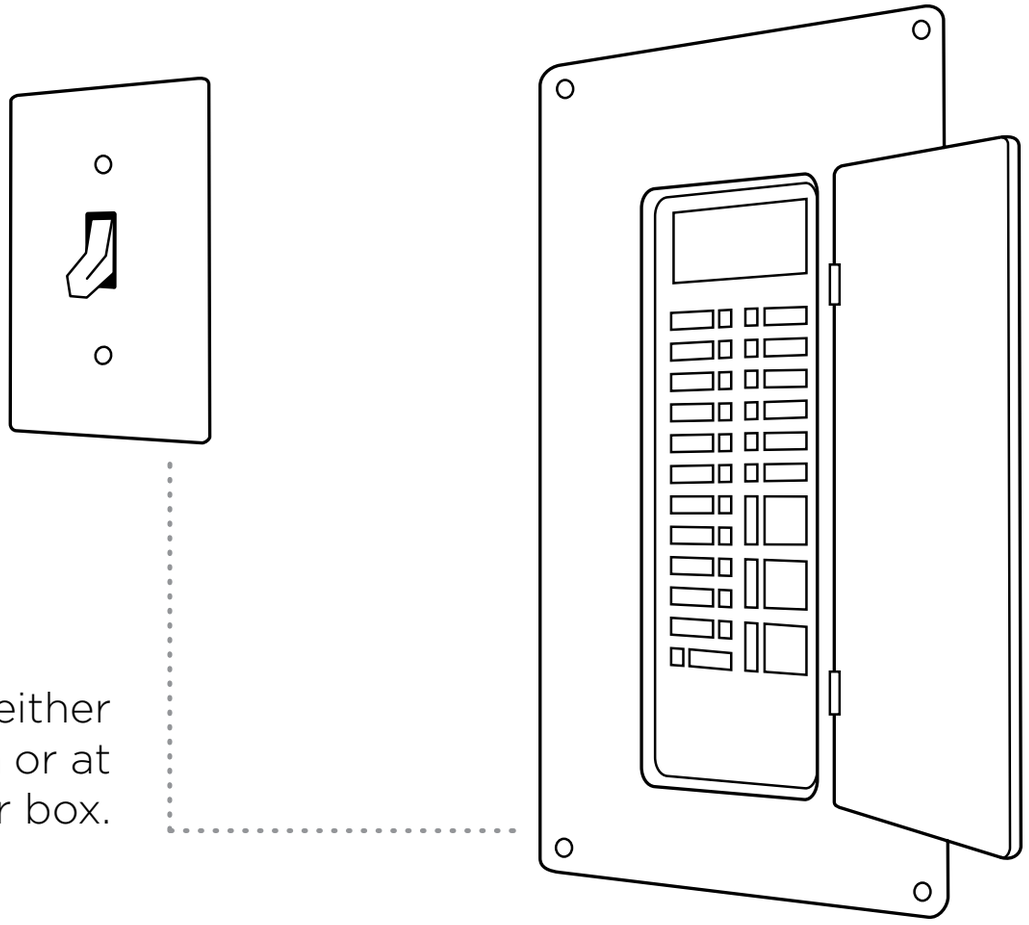

Power off your system either using the master switch or at the circuit breaker box.

Note: *If you don't have an existing thermostat,* ***skip to step 3.***

Step 2. Label the wires

Remove the cover from your old thermostat. Most snap off easily but some may be attached by screws.

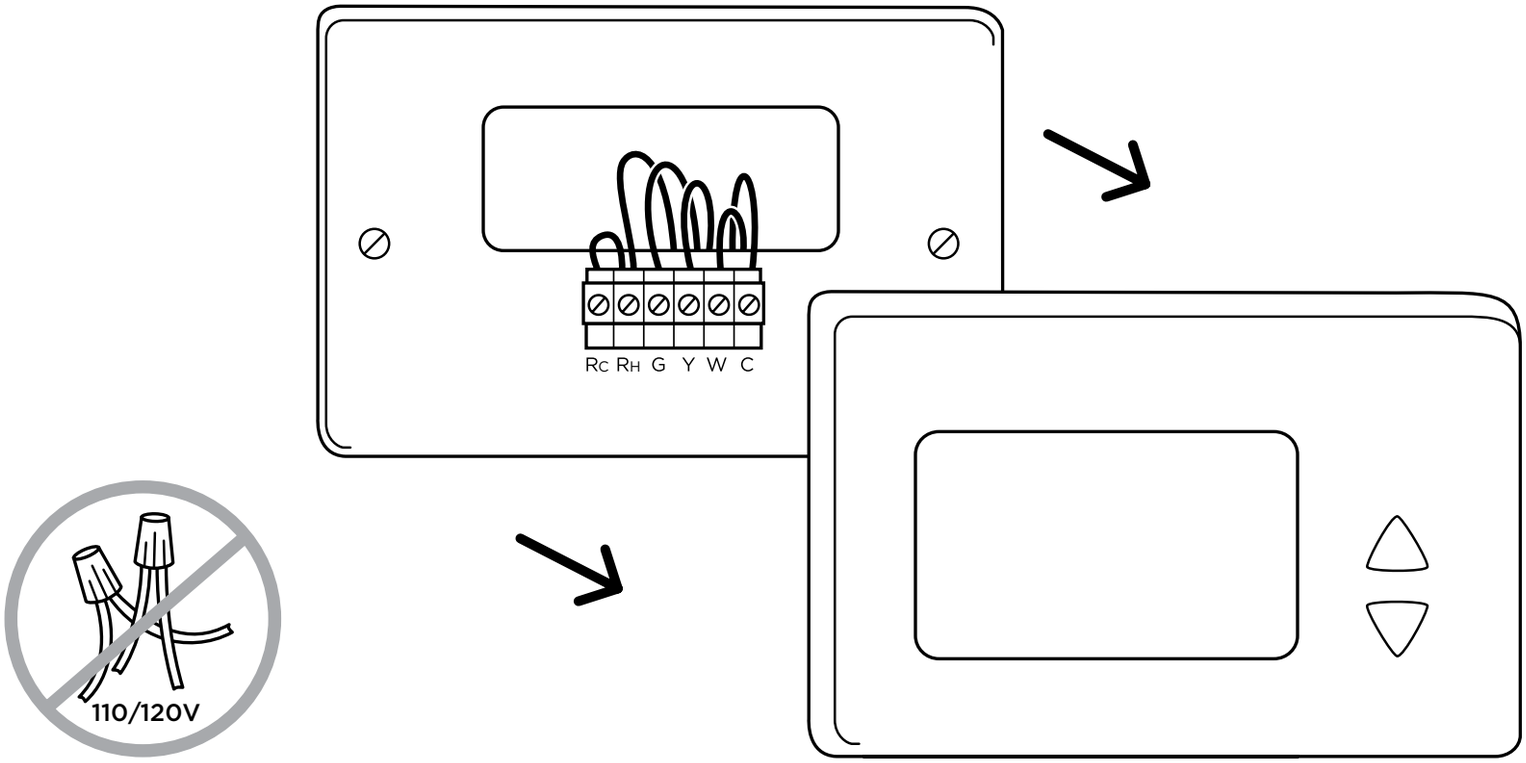

Warning! *If your old thermostat has 110/120V wires capped with wire nuts, it is a high voltage system and is not compatible with your ecobee3.*

1. Look at the wires coming out of the wall. Take a picture for reference.
2. Using the old thermostat base as a guide, label each wire going into your old thermostat with the provided stickers.

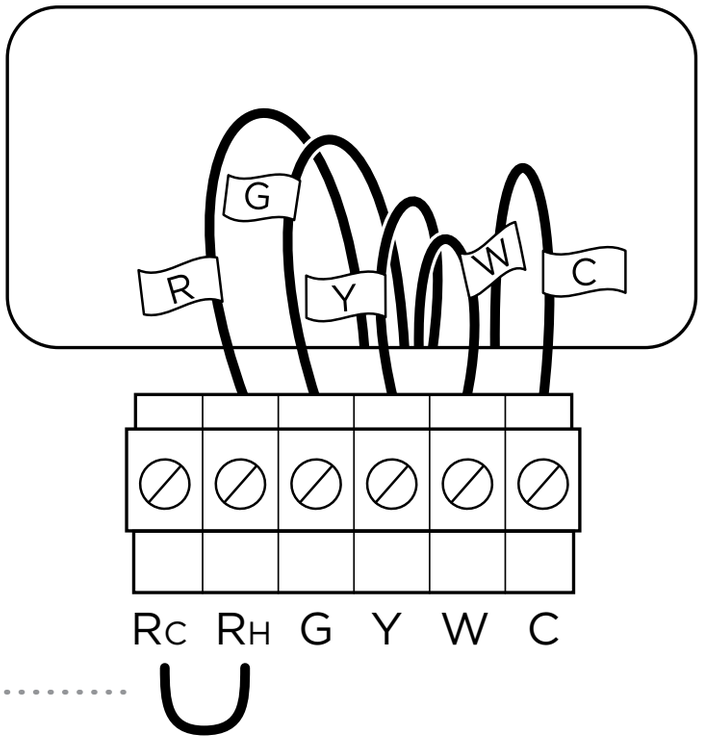

Discard any jumper wires between Rh, Rc, or R. Your ecobee3 does not need them.

3. If you have used the wire label C, please skip step 3 and proceed directly to step 4. If you have NOT used the wire label C, proceed to Step 3: Install Power Extender Kit (PEK).

Tip: *If the wires have completely different labels, please call ecobee support to help with wiring.*

Note: *The PEK is not required for all installs. If you have a wire labelled "C" at your thermostat,* ***skip to step 4.***

Step 3. Install Power Extender Kit (PEK)

Warning! *This step requires you to work with wiring at your HVAC Control Board. If you are not comfortable working with your HVAC wiring, contact ecobee customer support or hire a professional installer.*

Some thermostats do not have a C-wire. The C-wire is used to reliably provide power to the thermostat. In this case, the PEK can use the existing wires to power your thermostat.

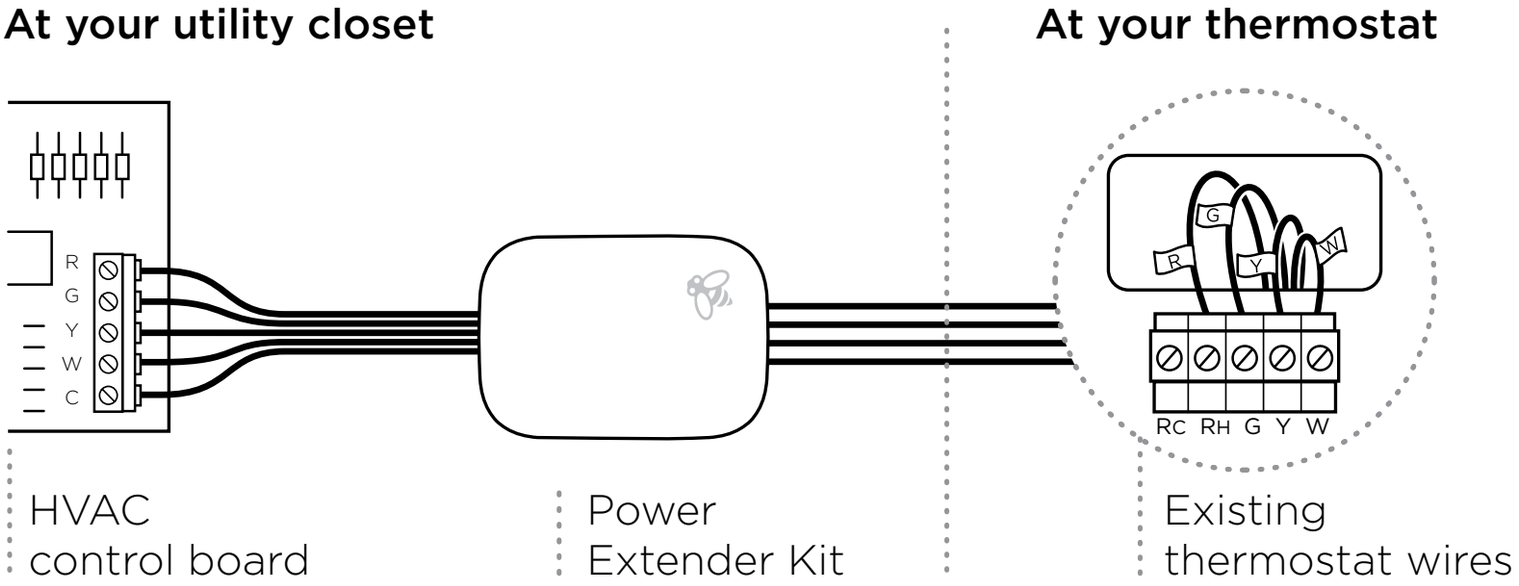

The PEK requires your system to have the following wires:

- 4 wires: W, Y, G, and R (or Rc or Rh), or
- 3 wires: Y, G, and R (or Rc or Rh)

1. Remove the cover panel from your HVAC equipment.
2. Locate the control board and take a picture of it for reference.
3. Using the stickers provided, label the wires on the control board leading to the thermostat.

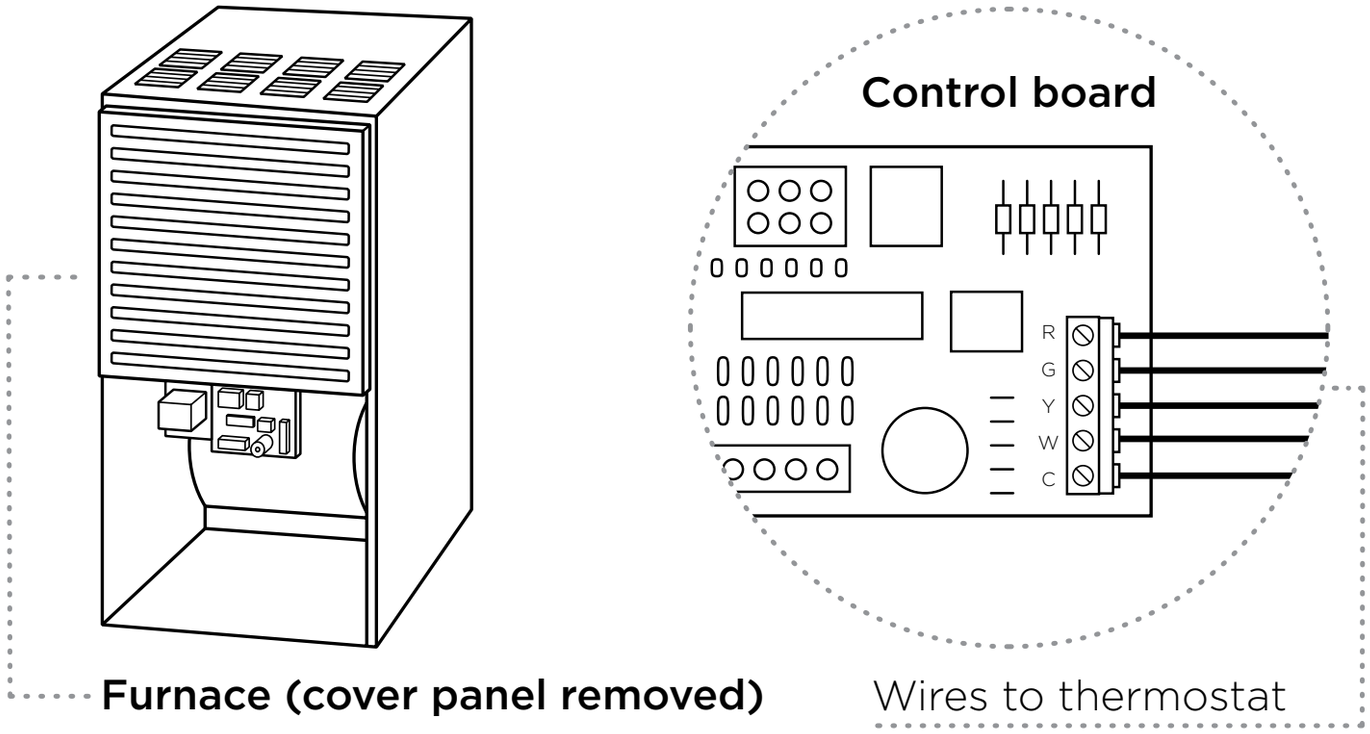

Tip: *The control board will generally have R, G, Y, W, C terminal designations.*

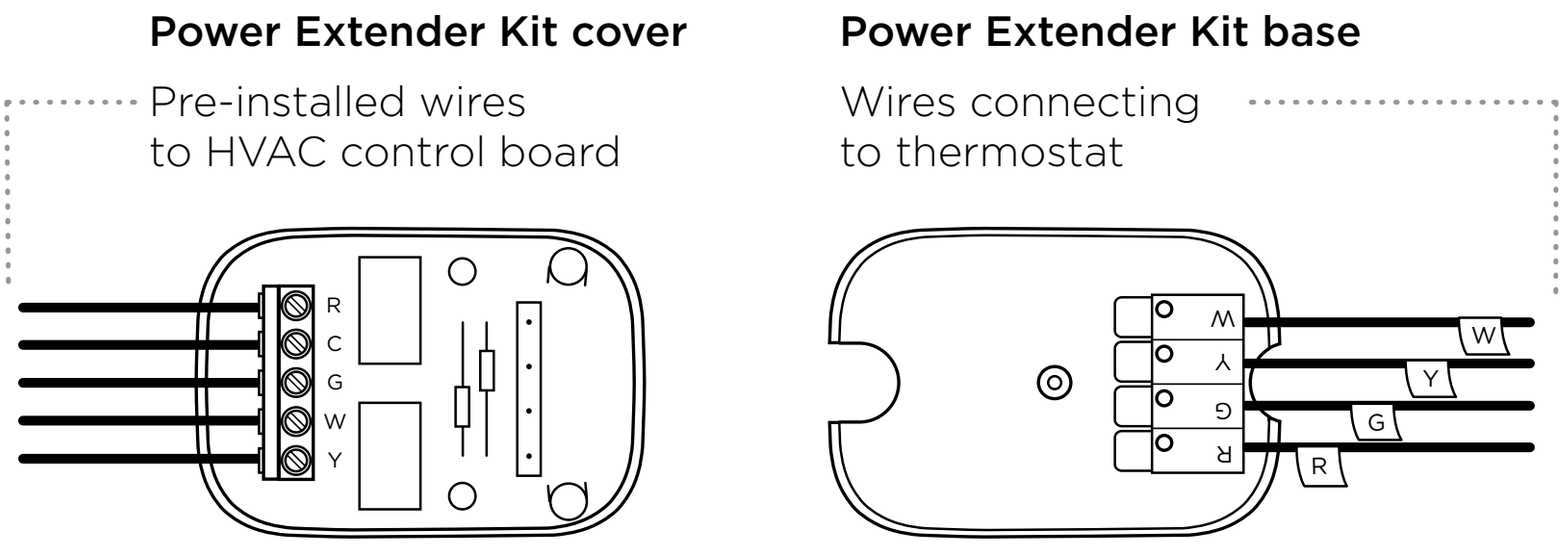

4. Open up the PEK. It has two rows of terminals (one side is for thermostat connections, the other side, pre-wired, is for the control board connections).
5. Disconnect the wires from the control board and reconnect them to the corresponding terminals on the thermostat side of the PEK.
6. Using the wires provided with the PEK, connect the terminals on the equipment side of the PEK to the corresponding terminals on the control board.
7. Close the PEK and use the provided double-sided tape on the back to mount it in a dry location that doesn't strain the wires. The PEK can be safely placed on any free space on an inside wall of your HVAC unit.
8. Close the HVAC cover panel.

Step 4. Attach back plate to wall

1. Gently remove the old thermostat base by unscrewing it from the wall. Make sure the wires do not fall back into the wall.
2. Position the back plate of your ecobee3 on your wall, using the built-in level to make sure it's straight. Mark the mounting holes on your wall in pencil.
3. Drill mounting holes for the drywall anchors.
4. The back plate must be used with a trim plate. If the smaller trim plate does not cover the marks left by the previous thermostat, you can attach the larger trim plate instead.

Remove the back plate by gently pushing the back of its left side towards you.

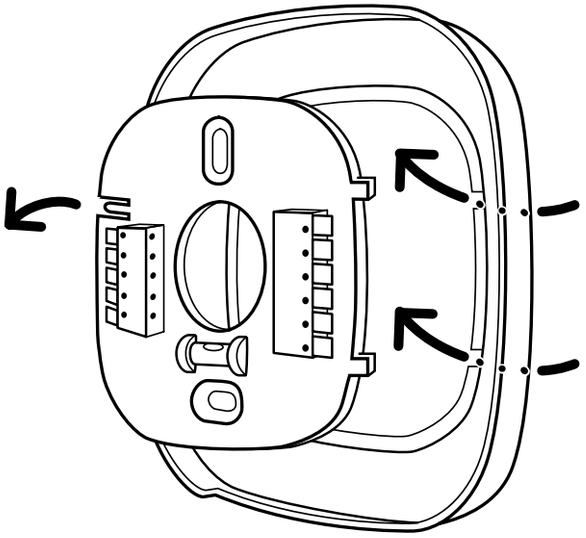

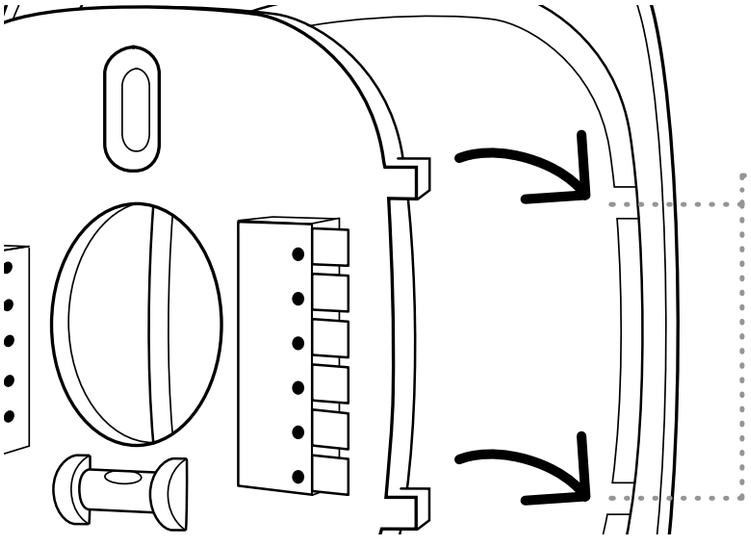

Insert the back plate using the tabs on the right as a guide. It will snap into place when correctly inserted.

Secure the back plate

Use the drywall anchors and screws provided to secure the back plate to the wall.

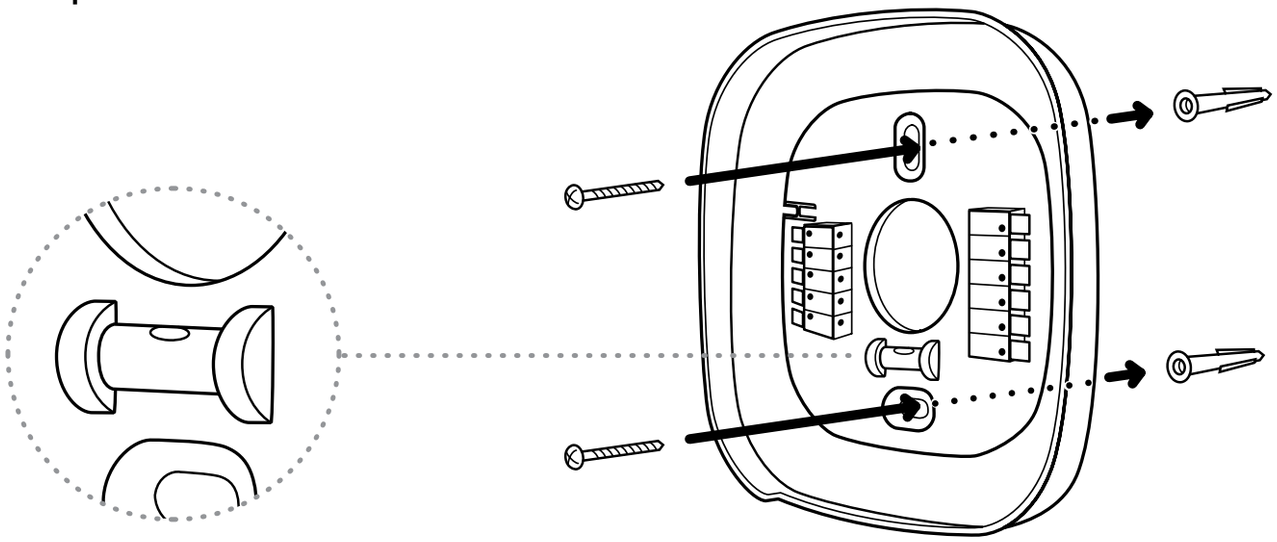

Tip: *ensure the back plate is straight by centering the bubble on the built-in level.*

Step 5. Connect wires to ecobee3

Tip: *If you are replacing an existing thermostat, use the stickers as a guide when inserting the wires into the ecobee3 terminal blocks.*

The wires from the wall should plug easily into the terminal blocks. To release a wire, press down on the lever.

When installed correctly, the release lever of the terminal block will lower to indicate engagement. Tug on the wires to ensure they are engaged in the terminal.

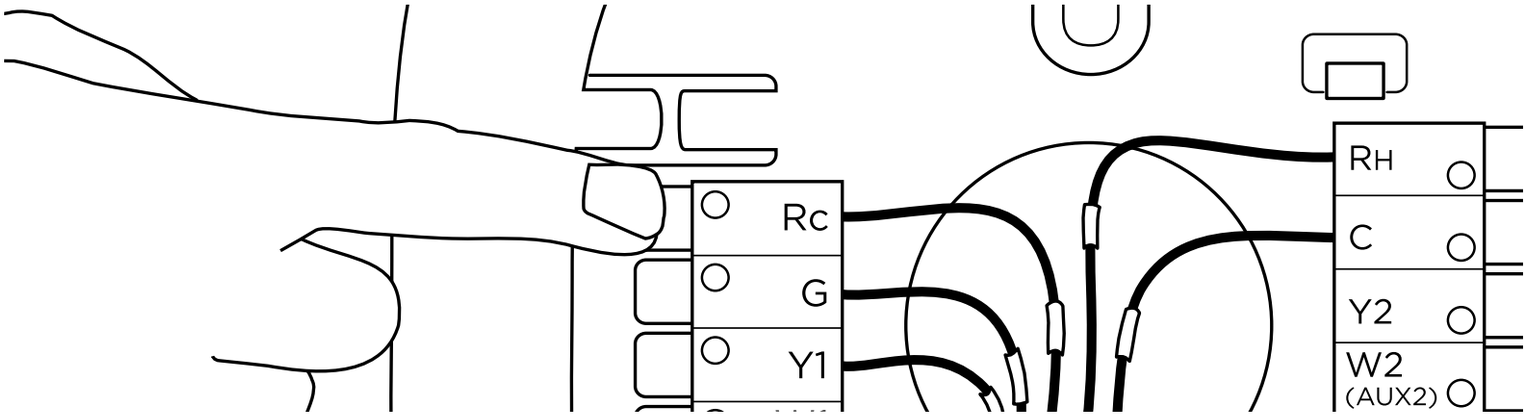

Warning! *If you installed the PEK in step 3, the R (or Rc or Rh) wire must connect to the Rc terminal on the ecobee3, or the thermostat will not power on.*

If you need help with the wiring, refer to the reference diagrams at the back of this guide:

- For conventional heating and cooling systems, see page 29.
- For heat pumps (air or geothermal), see page 30.
- For boilers or radiant heat systems, see page 31.
- For accessory devices like dehumidifiers, humidifiers, or ventilators, see pages 32–35.
- For PEK installations, see page 36.

Attach thermostat

Push any excess wires back into the wall, and connect your ecobee3 thermostat to the base.

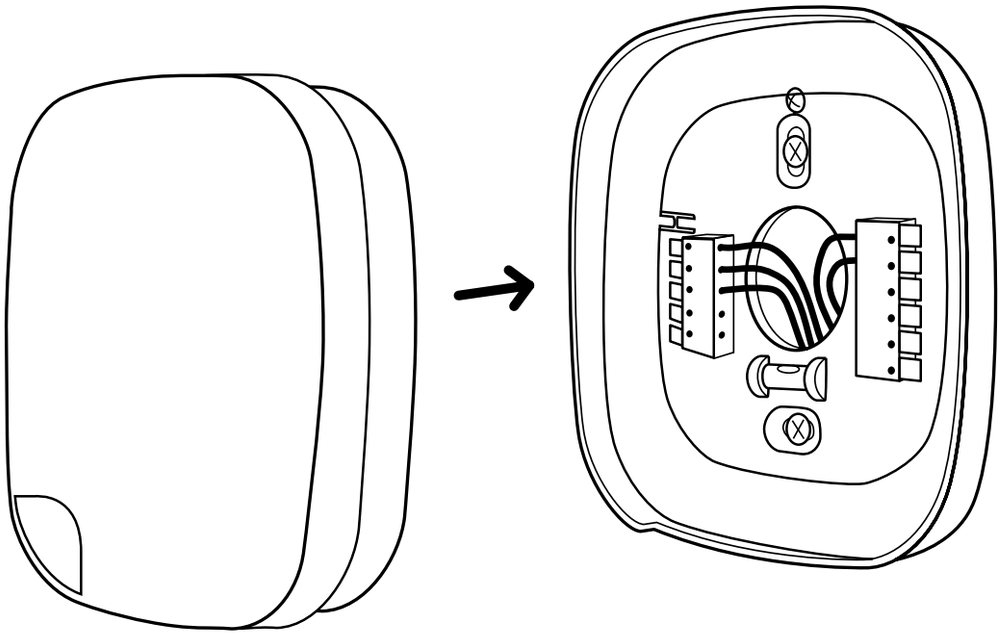

Step 6. Power on ecobee3

Power your HVAC equipment back on. Your ecobee3 will automatically power on. If your ecobee3 does not power on, see page 27 for troubleshooting.

Follow the on-screen instructions. ecobee3 will guide you through the setup, which includes:

- Equipment configuration (HVAC and accessories)
- Set your preferences (choose °F or °C, heating and cooling setpoints, thermostat name)
- Set up wi-fi
- Register your ecobee3 online

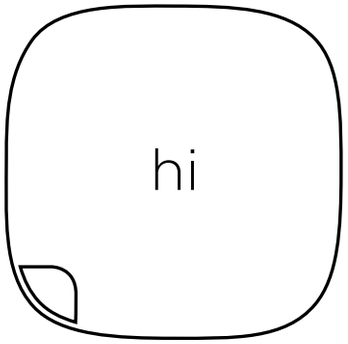

Tip: *The settings on your ecobee3 can be changed at any time from the main menu.*

Step 7. Install remote sensor

Ordinary thermostats only read the temperature in one location. ecobee3 uses multiple temperature readings from remote sensors to deliver comfort more reliably.

Pair the sensor at the thermostat

1. To activate your remote sensor, ensure your ecobee3 is awake by standing in front of it or touching the screen.
2. Pull the plastic tab on your remote sensor and it will power on and connect to your ecobee3 automatically.

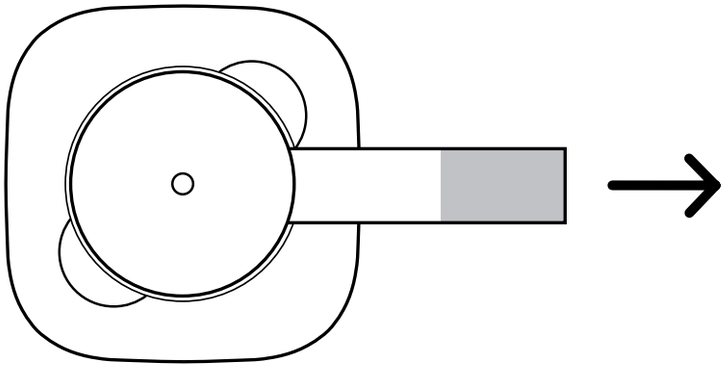

Stand in front of your ecobee3 and pull the plastic tab on the remote sensor to automatically pair it with your thermostat.

3. Your ecobee3 will detect your remote sensor and ask you to name it. You can verify a successful connection on your thermostat. If your sensor does not connect with the ecobee3, simply remove the battery, wait 2 minutes, and re-insert the battery to restart the detection process.

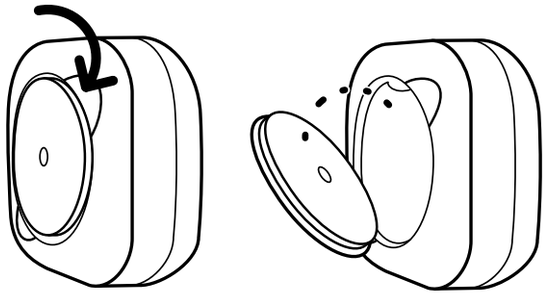

To access the battery, pop the remote sensor back cover off using the ridges provided.

To attach the remote sensor stand, remove the smaller back cover and pop the stand into place.

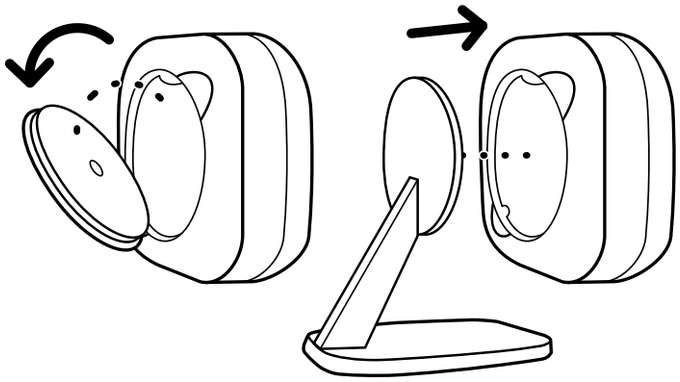

To remove the remote sensor stand, pull the base outwards.

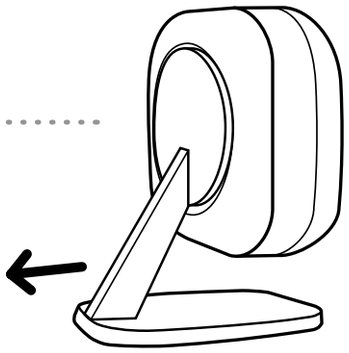

Find a location

Place your remote sensor at a height of approx. 5ft / 1.5m on an interior wall, away from direct heat/cool sources (eg. fireplace, air vents, etc.) If the sensor is out of range of your ecobee3 (approx. 45 ft / 13.7 m) the thermostat will show N/A, meaning it cannot connect to the remote sensor. When in range, they will automatically reconnect.

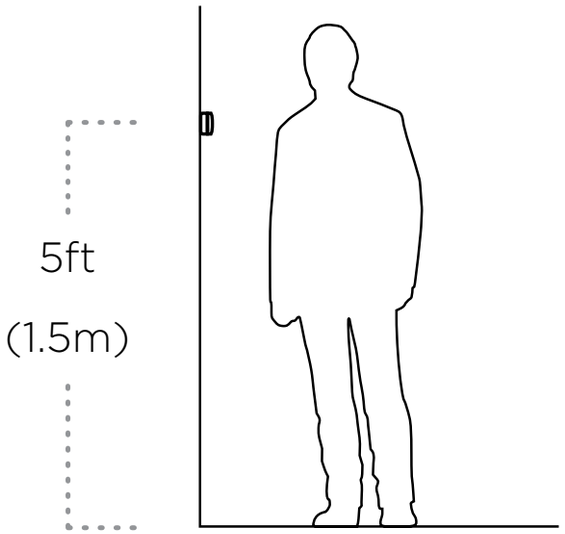

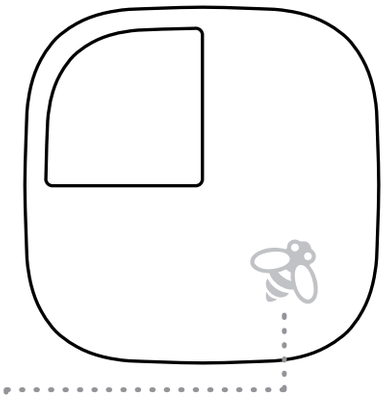

Warning! *Do not place the remote sensor in direct sunlight, near vents or window openings, or in enclosed areas such as drawers, closed cabinets or closets as this will distort the temperature readings.*

Install the remote sensor

Using the materials provided, install the remote sensor in one of three ways:

Option 1.
Attach to a wall using the screw provided.

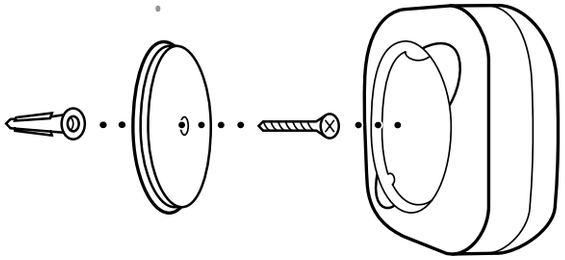

Option 2.
Attach to a wall using the adhesive provided.

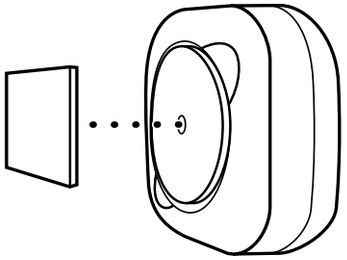

Option 3.
Place on a flat surface using the stand provided.

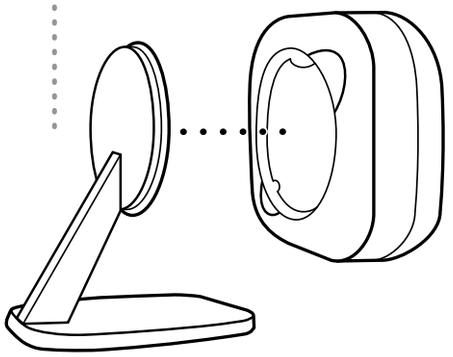

Tip: *For accurate occupancy and temperature sensing, make sure your remote sensor has an unobstructed view of the room, and can sense the ambient room temperature (it cannot do so from an enclosed space).*

Remote sensor features

Smart Home/Away

If your ecobee3 senses that you are home during your scheduled Away period, or away during your scheduled Home period, it will automatically override your schedule to maximize comfort and savings.

Follow Me

Control your comfort by averaging the temperature of the selected sensors that detect motion (Enabled) or all of the selected sensors in your home, regardless of motion (Disabled).

Comfort Wise

The ecobee3 has been designed to maximize user comfort and control but also provide protection and peace of mind. If the ecobee3 loses connectivity with the remote sensor, or the temperature reading of the ecobee3 and remote sensor differ by greater than a configured amount, then the reading from that remote sensor will not be used to determine the home temperature.

Remote sensor tips

Can I turn off the occupancy sensor?

You may want to sense temperature without tripping the motion sensor. Select a location for your remote sensor where it can sense the ambient room temperature, without having a clear view of the room (turned away from the room, or tucked behind your family portrait).

Storing your remote sensor

If you do not wish to use the remote sensor, delete it from the ecobee3 sensors menu and disconnect the battery before storing it. This will prevent the sensor from trying to heat the inside of your storage closet!

Ideal locations

Have pets or curious children? To prevent your remote sensor from being jostled or bumped off its stand, affix your sensor to the wall using the adhesive or screw provided, or simply place it out of reach.

Congratulations, you're done!

Register your ecobee3 at **ecobee.com** to control it from your smartphone, tablet or desktop, and to access free online energy management tools.

Download the free ecobee3 mobile app on iTunes and the Google Play store.

Menu options

To access the thermostat menu, touch the screen and press ☰

System
Selects mode of operation: heat/cool/auto/off, fan on/auto

Schedule
Configures temperature according to time and day

Comfort Settings
Configures temperature for different occupancy states (Away, Home, Sleep)

Vacation
Configures temperature for a specific future time period

Settings
Configures display preferences (°F/°C, date, brightness), wi-fi, and equipment operating parameters (thresholds, sensors, etc)

Reminders
Displays any reminder or alert messages

About
Displays technical information about your thermostat

Troubleshooting

If your ecobee3 does not power on, please check the following:

1. Check that all wires are properly inserted into the terminal blocks at the thermostat. Tug on the wires to ensure they are not loose.
2. Some HVAC equipment has a safety switch that cuts off power to the equipment if the equipment cover panel is not closed properly. Please ensure the cover panel of the equipment is closed properly.
3. If you installed the PEK, ensure R wire is connected to Rc only and G wire is inserted properly into the terminal.
4. If you have a multi-meter, please check the AC voltage between Rc and C or Rh and C and ensure it is 24V.
5. If your device still does not power on, please call ecobee support at **1.877.932.6233** (North America)**,** **1.647.428.2220** (International).

Wiring diagrams

The following pages provide wiring diagrams for common HVAC equipment configurations.

Need help with your ecobee3 wiring? Find how-to videos and tutorials on **ecobee.com/HowTo**

Conventional heating and cooling (up to 2 stages each)

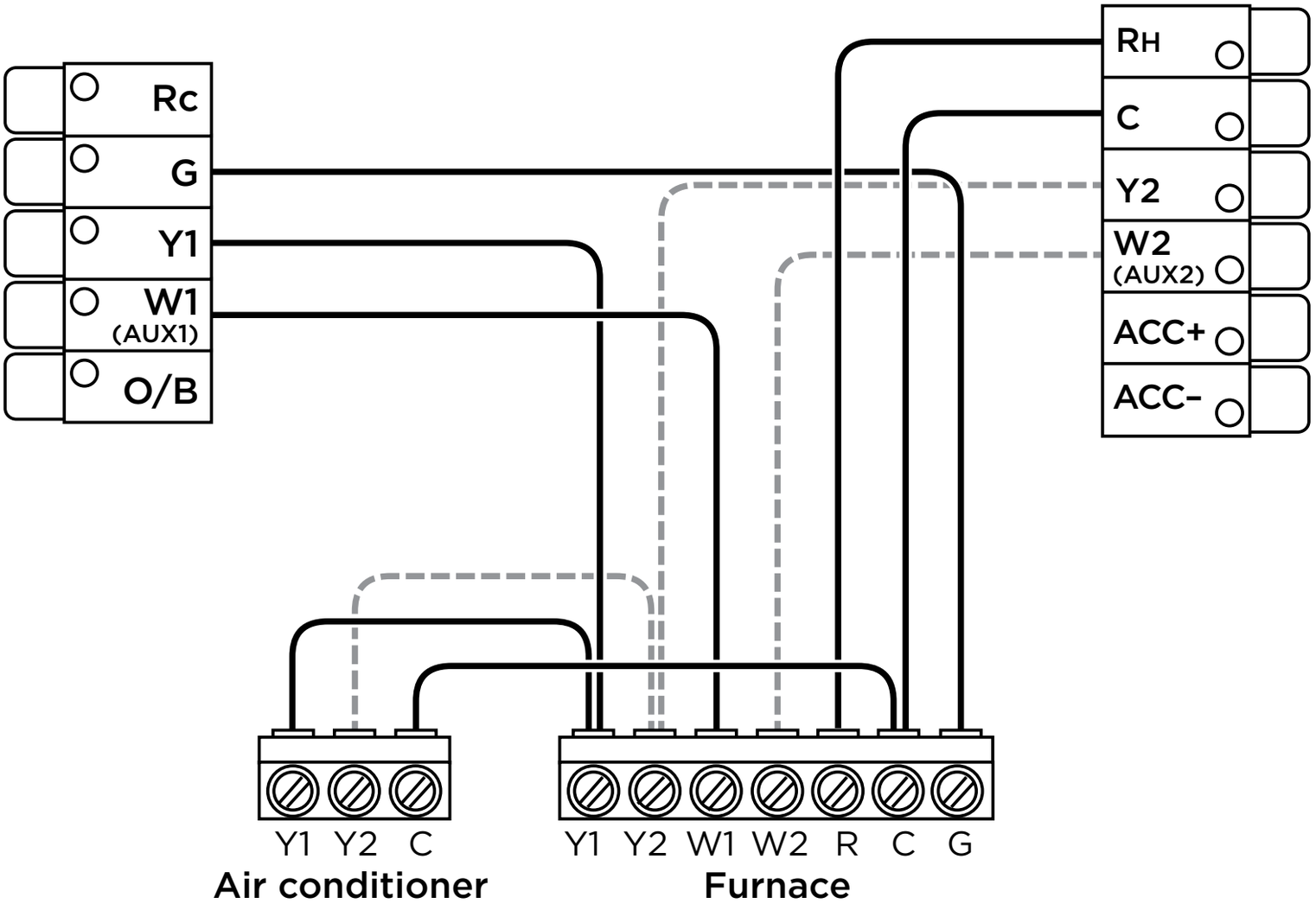

Stage 2 heat and cool if applicable

Note: *Do not jumper Rc or Rh, ecobee3 does this automatically. R can go into either Rc or Rh terminals on your ecobee3.*

Heat pump (air or geothermal) with auxiliary heat

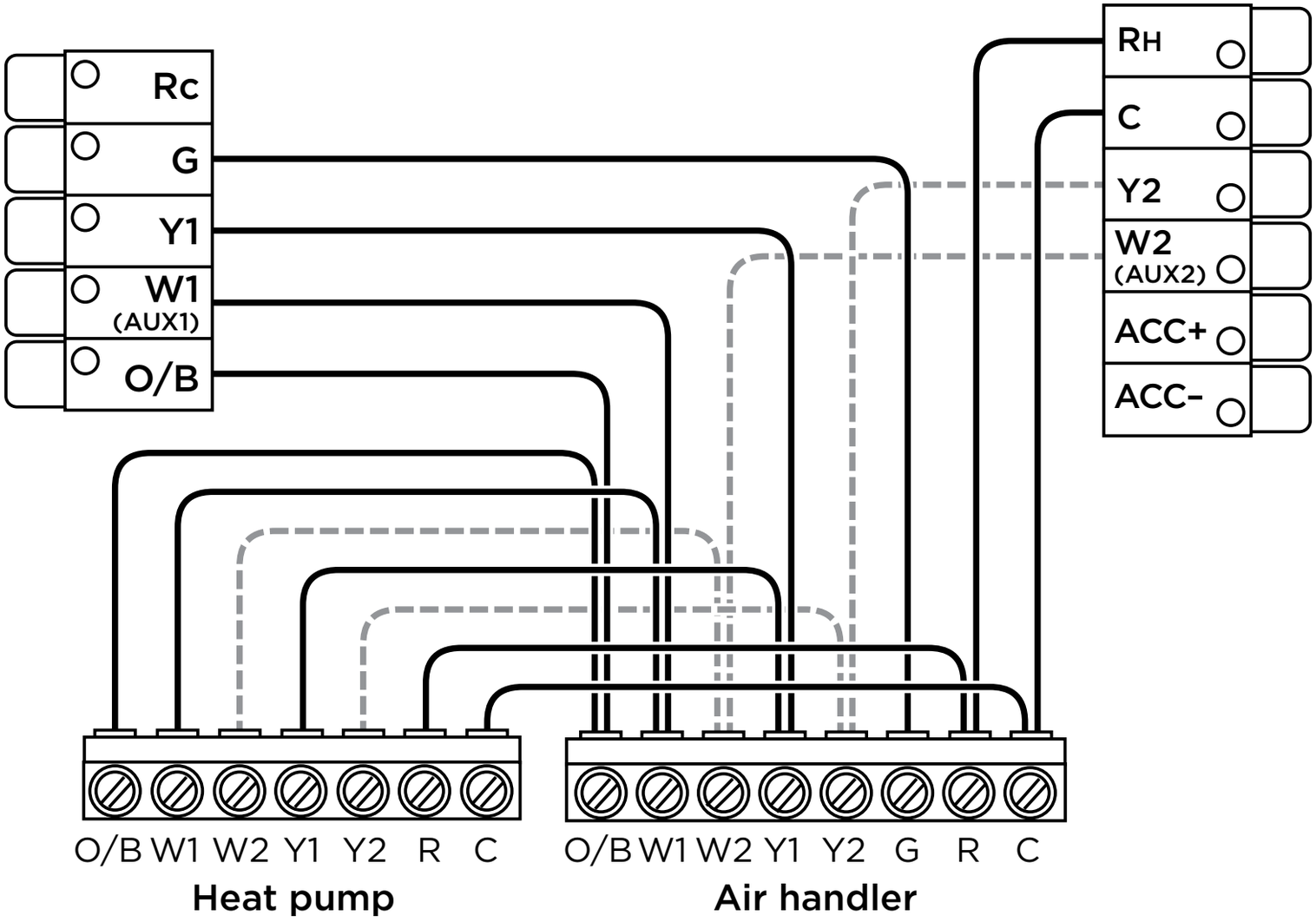

Stage 2 compressor and auxiliary heat if applicable

Note: *Do not jumper Rc or Rh, ecobee3 does this automatically. R can go into either Rc or Rh terminals on your ecobee3.*

Boiler or radiant system with air handler and conventional cooling or heat pump

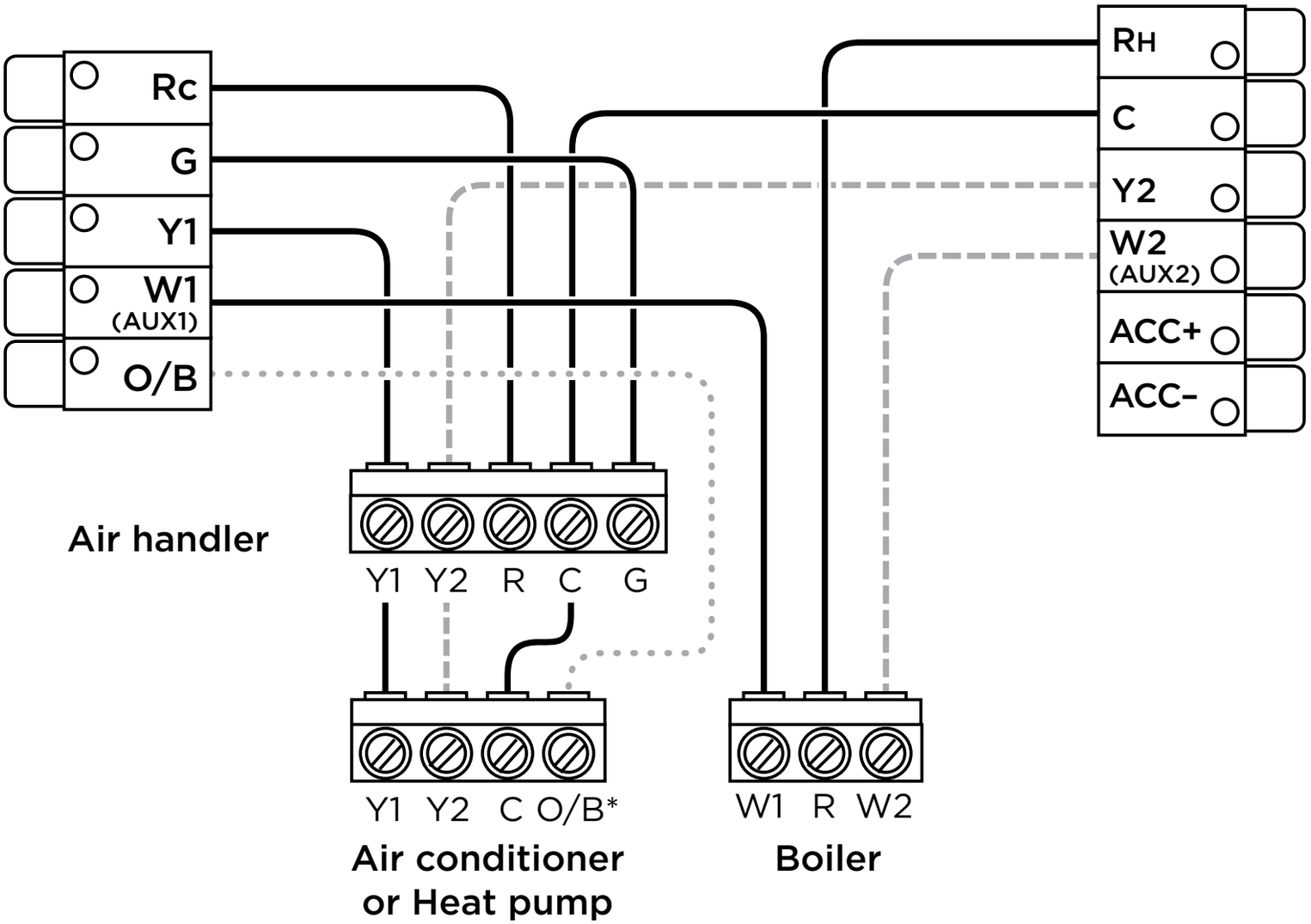

- - - - Stage 2 heat and cool if applicable

····· *Reversing valve for heat pumps only

Note: *Do not jumper Rc or Rh, ecobee3 does this automatically. R can go into either Rc or Rh terminals on your ecobee3.*

Accessory devices

The ecobee3 can control an accessory HVAC device like a humidifier, dehumidifier, or ventilation device from its ACC terminals.

Note: *You will need to configure the accessory device when you first power on your ecobee3.*

2–wire accessory (humidifier/dehumidifier/ventilator)

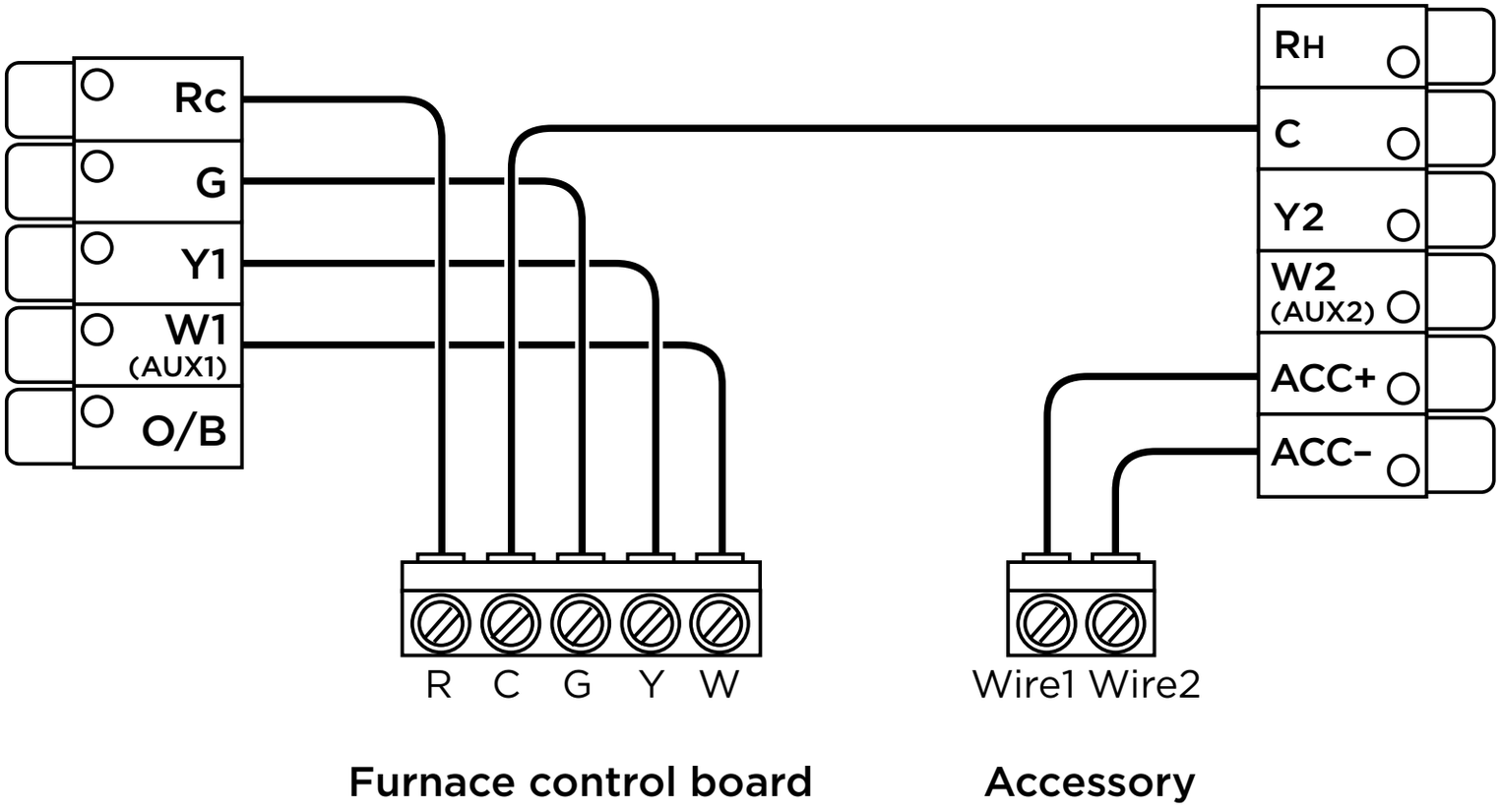

1–wire accessory (humidifier/dehumidifier/ventilator)

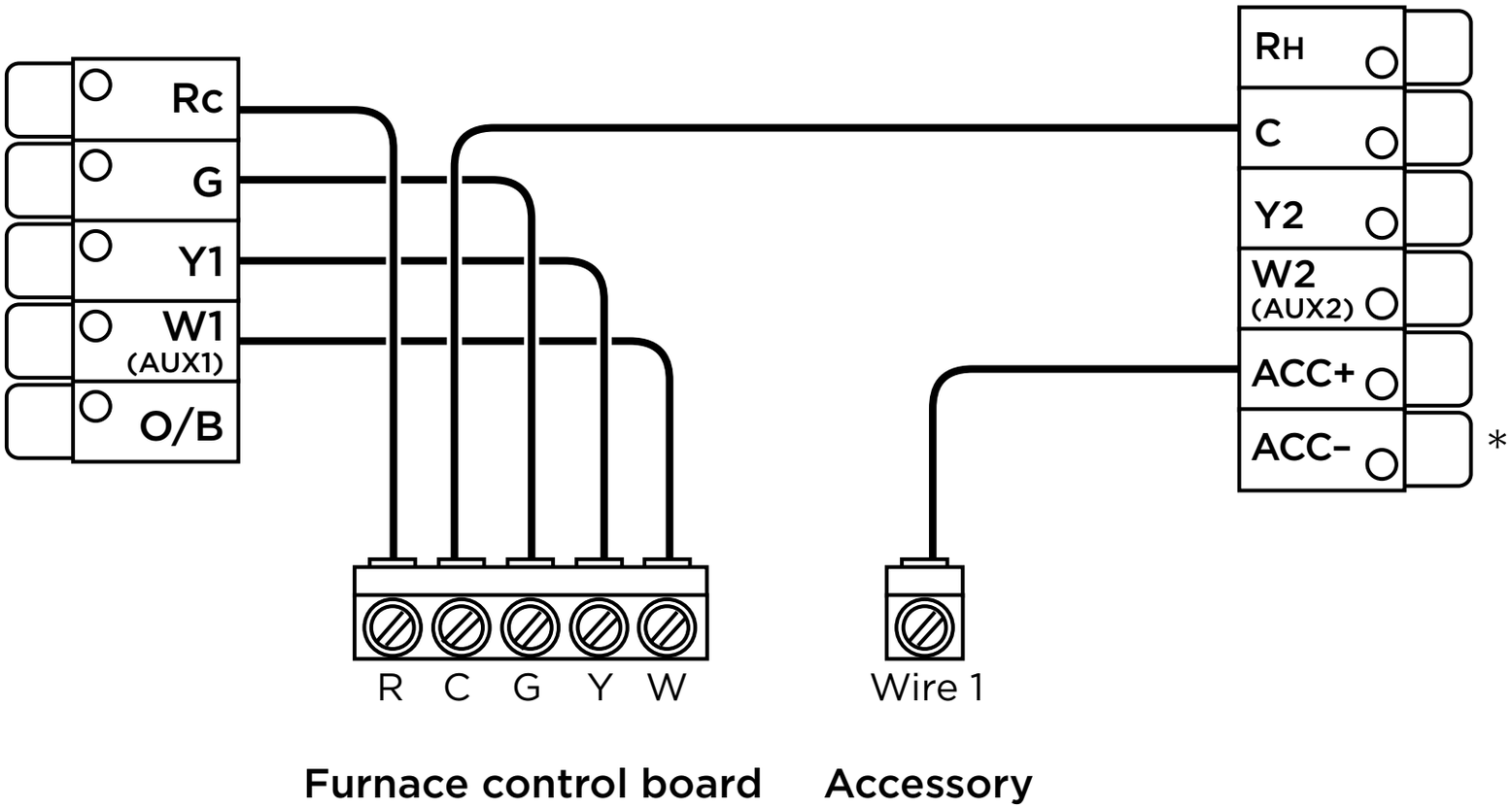

*ecobee3 automatically connects Rc to ACC- when 1-wire configuration is selected during accessory setup.

Warning! *Damage may occur if accessory is connected to ACC-.*

1–wire/Integrated dehumidifier

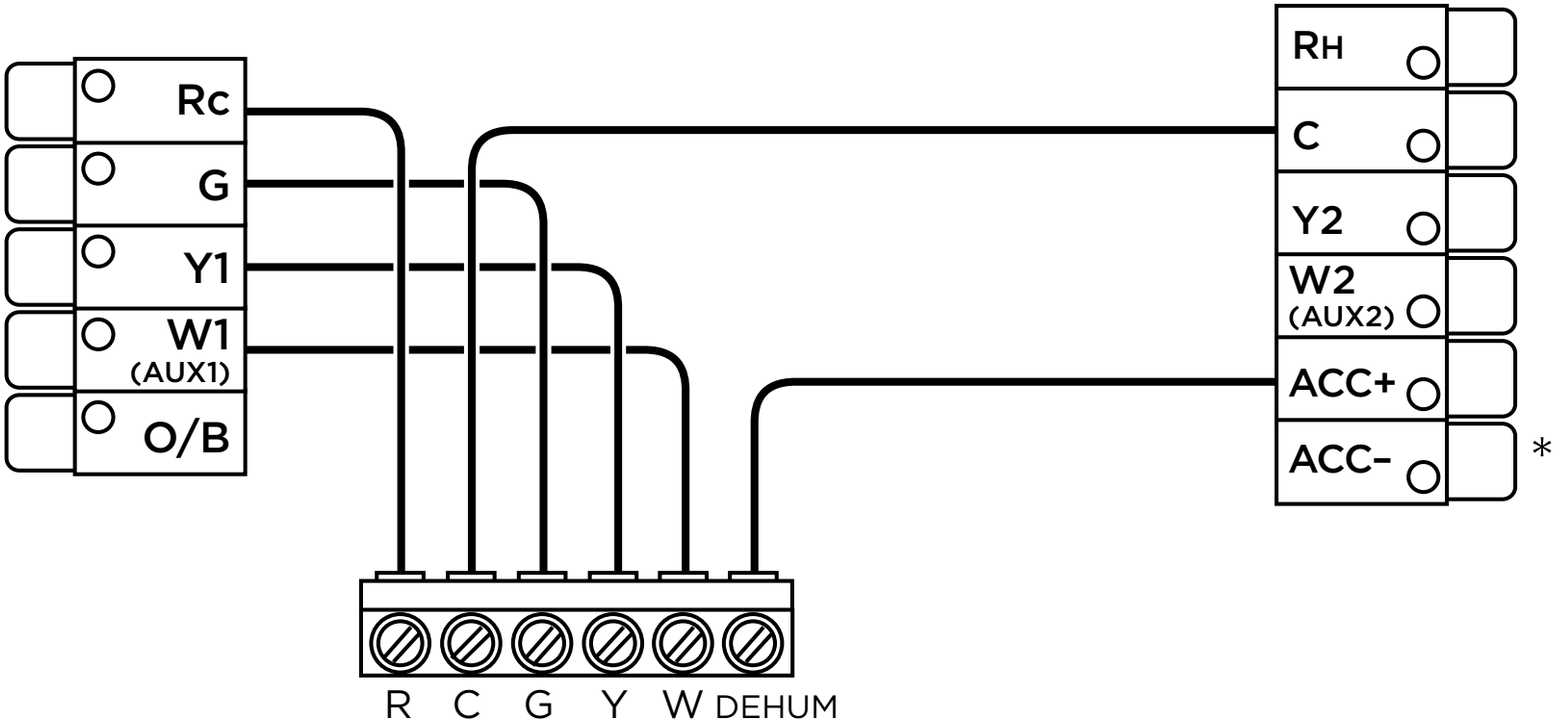

Furnace control board

*ecobee3 automatically connects Rc to ACC- when 1-wire configuration is selected during accessory setup.

Warning! *Damage may occur if accessory is connected to ACC-.*

HRV/ERV

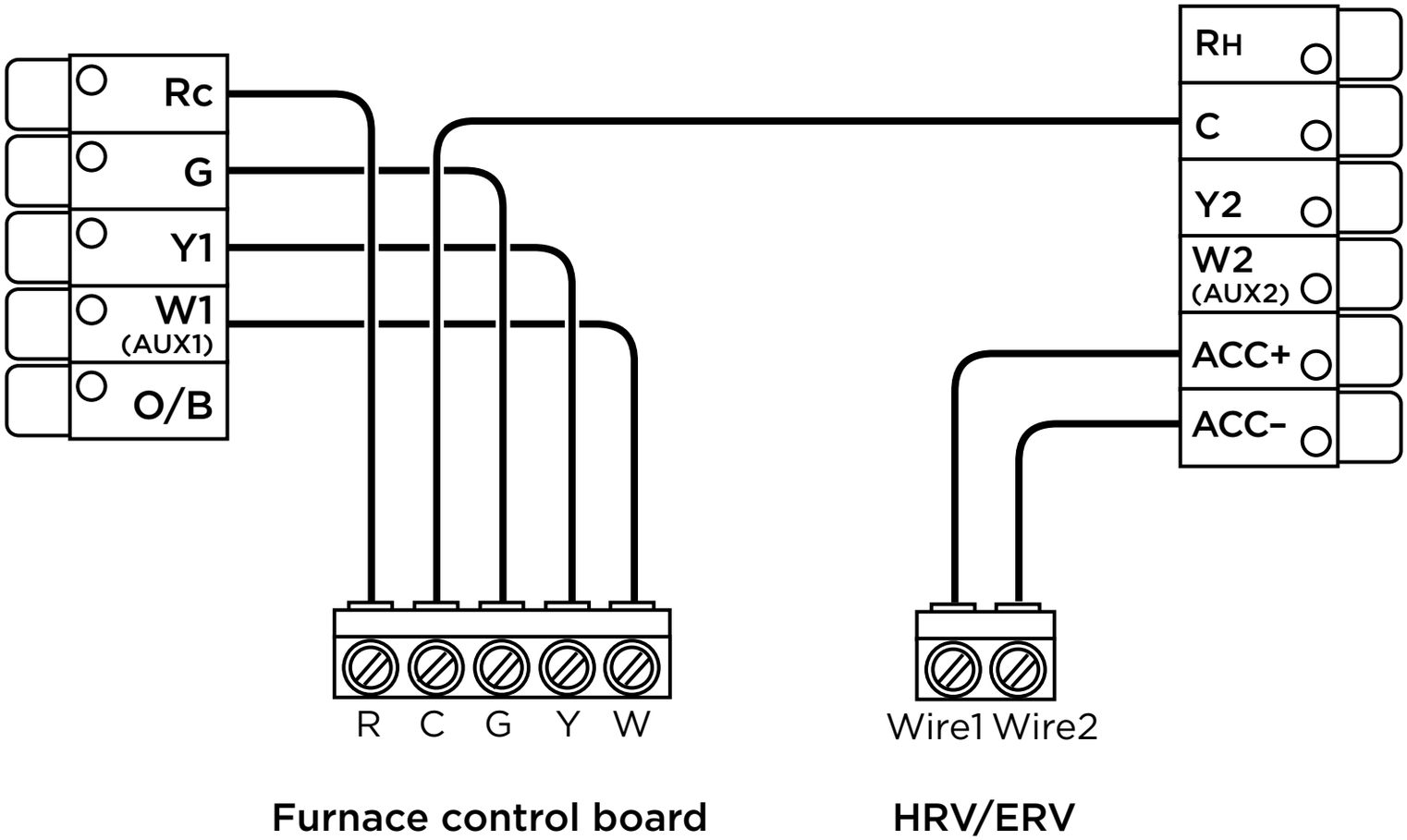

Note: *To determine which wires from your ERV/HRV need to be connected to the ACC+/ACC- terminals on your ecobee3, you will need to refer to your ERV/HRV manual. The two wires will be listed under configurations that enable "optional auxiliary control for high speed fan" or "dry contact timer configuration".*

PEK thermostat wiring

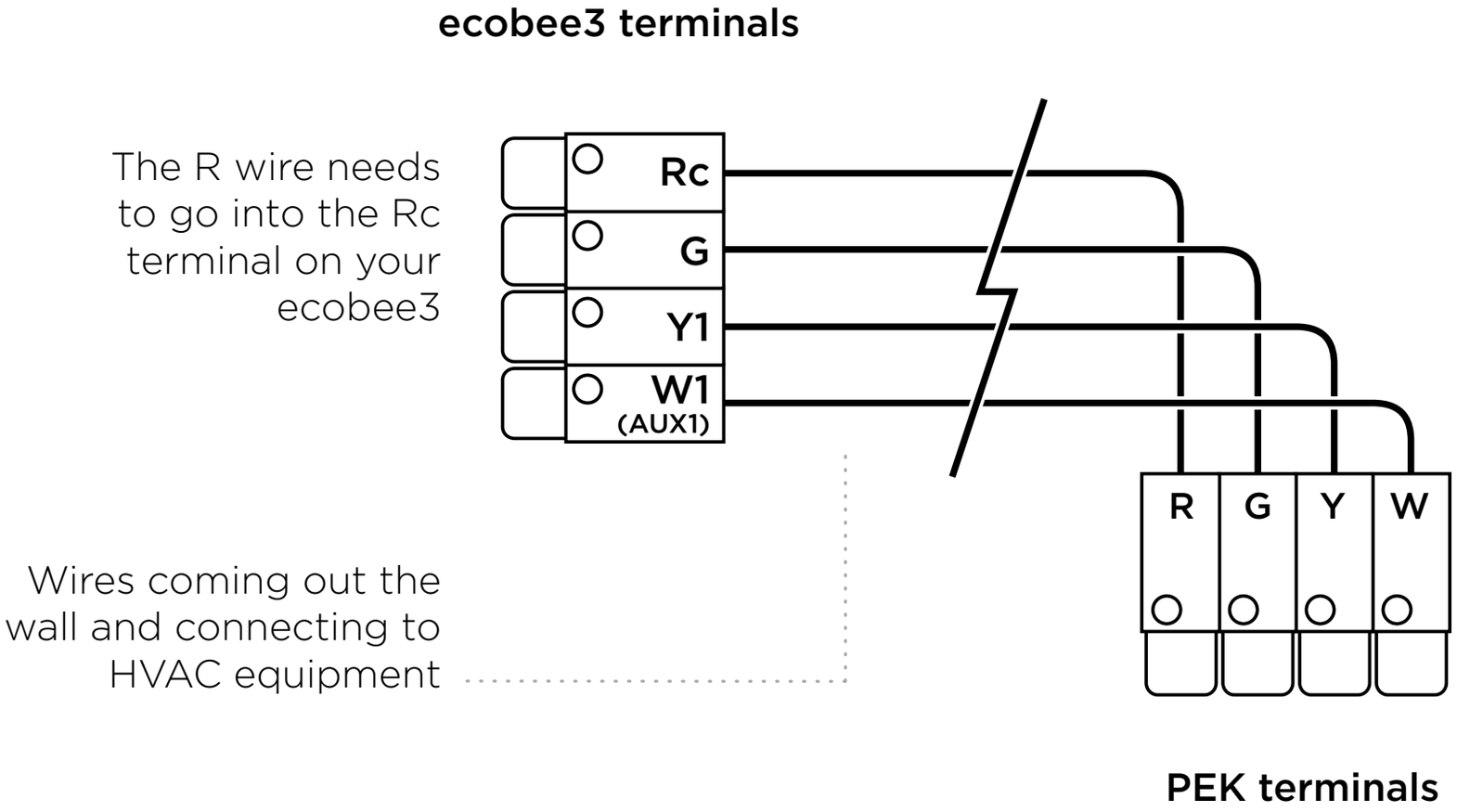

Approvals

This product was designed and built in accordance to RoHS directive 2002/95/EC and contains no hazardous substances as defined by this directive.

FCC Compliance Statement

This equipment has been tested and found to comply with the limits for Class B digital devices, pursuant to Part 15 of the FCC Rules. These limits are designed to provide reasonable protection against harmful interference in a residential installation. This equipment generates, uses, and can radiate radio frequency energy and, if not installed and used in accordance with the instruction manual, may cause harmful interference to radio communications. However, there is no guarantee that interference will not occur in a particular installation. If this equipment does cause harmful interference to radio or television reception, which can be determined by turning the equipment off and on, the user is encouraged to try to correct the interference by one or more of the following measures:

- Reorient or relocate the receiving antenna.

- Increase the separation between the equipment and receiver.

- Connect the equipment to an outlet on a different circuit from the receiver.

- Consult the dealer or an experienced radio/TV contractor for help.

To satisfy FCC/IC RF exposure safety requirements, a separation distance of 8 inches (20 cm) or more should be maintained between this device and persons. To ensure compliance, operation at closer than this distance is not allowed.

FCC ID: WR9EBSTATZBE3 IC: 7981A-EBSTATZBE3

Warning: Changes or modifications not expressly approved by ecobee Inc. could void the user's authority to operate the equipment.

3-Year Limited Warranty

ecobee warrants that for a period of three (3) years from the date of purchase by the consumer ("Customer"), the ecobee3 (the "Product") shall be free of defects in materials and workmanship under normal use and service. During the warranty period, ecobee shall, at its option, repair or replace any defective Products, at no charge. Any replacement and/or repaired device are warranted for the remainder of the original warranty or ninety (90) days, whichever is longer.

If the product is defective, call Customer Service at 1-877-932-6233. ecobee will make the determination whether a replacement product can be sent to you or whether the product should be returned to the following address: ecobee Customer Service, 250

University Ave, Suite 400, Toronto, Ontario, M5H 3E5, Canada. In the event of a failure of a Product, Customer may:

(a) if Customer did not purchase the Product directly from ecobee, contact the third party contractor from whom the Product was purchased to obtain an equivalent replacement product, provided the contractor determines that the returned Product is defective and Customer is otherwise eligible to receive a replacement product;

(b) contact ecobee directly for service assistance at 1-877-932-6233 and ecobee will make the determination whether an advance equivalent replacement Product can be sent to Customer with return shipping supplies (in which case a hold shall be put on Customer's credit card for the value of the replacement Product until ecobee has received the defective Product). Product should be returned to the following address: ecobee Customer Service, 250 University Ave, Suite 400, Toronto, Ontario, M5H 3E5, Canada. If the returned Product is found by ecobee to be defective and Customer is otherwise eligible to receive a replacement product, no amount shall be charged to Customer's credit card; or

(c) ship the defective Product directly to ecobee, in which case Customer shall contact ecobee directly at 1-877-932-6233, so ecobee can make the required shipping arrangements. Upon receipt of the defective Product, ecobee will ship an equivalent replacement product to Customer, provided the returned Product is found by ecobee to be defective and Customer is otherwise eligible to receive a replacement product.

This warranty does not cover removal or reinstallation costs and shall not apply if the damages were found to be caused by something other than defects in materials or workmanship, including without limitation, if the Product:

- was operated/stored in abnormal use or maintenance conditions;

- is repaired, modified or altered, unless ecobee expressly authorizes such repair, modification or alteration in writing;

- was subject to abuse, neglect, electrical fault, improper handling, accident or acts of nature;

- was not installed by a licensed Heating Ventilating and Air Conditioning (HVAC) contractor; or

- was installed improperly.

ecobee's sole responsibility shall be to repair or replace the Product within the terms stated above. ECOBEE SHALL NOT BE LIABLE FOR ANY LOSS OR DAMAGE OF ANY KIND, INCLUDING ANY SPECIAL, INCIDENTAL OR CONSEQUENTIAL DAMAGES RESULTING, DIRECTLY OR INDIRECTLY, FROM ANY BREACH OF ANY WARRANTY, EXPRESS OR IMPLIED, OR ANY OTHER FAILURE OF THIS PRODUCT. Some US states and Canadian provinces do not allow the exclusion or limitation of incidental or consequential damages, so the above limitation or exclusion may not apply to you.

ecobee's responsibility for malfunctions and defects in materials and workmanship is limited to repair and replacement as set forth

in this warranty statement. All express and implied warranties for the product, including but not limited to any implied warranties and conditions of merchantability and fitness for a particular purpose, are limited to the three-year duration of this limited warranty. No warranties, whether expressed or implied, will apply after the limited warranty period has expired. Some US states and Canadian provinces do not allow limitations on how long an implied warranty lasts, so this limitation may not apply.

ecobee neither assumes responsibility for nor authorizes any other person purporting to act on its behalf to modify or to change this warranty, nor to assume for it any other warranty or liability concerning this product.

This warranty gives you specific rights, and you may also have other rights which vary from jurisdiction to jurisdiction. If you have any questions regarding this warranty, please write to ecobee Customer Service, 250 University Ave, Suite 400, Toronto, Ontario, M5H 3E5, Canada.

We're here to help

ecobee.com | support@ecobee.com | 1.877.932.6233

© 2014 ecobee Inc. All rights reserved. ecobee and the ecobee logo are trademarks of ecobee Inc., registered in the U.S. and other countries.
Printed in China

EB-STATe3-01 ATH-5-0009-4

SECTION 23 30 00

Air Quality Sensors (CO2)

K33-BLG/ELG

Sensor module for environment logging
Data Sheet and Manual

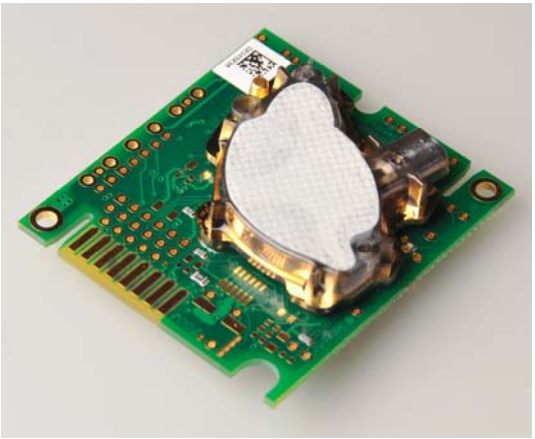

***CO_2Engine™ -ELG** (left) **and CO_2Engine™ -BLG** (right)*

SE-0020 K-33 ELG Sensor
CM-0026 K-33 ELG Devkit
SE-0027 K-33 BLG Sensor
CM-0025 K-33 BLK DevKit

General

- This document describes a family of sensor modules ***CO_2Engine™ - BLG/ELG*** designed to measure and store records of environmental parameters such as
  - **Temperature**
  - **Relative Humidity**
  - **CO_2 concentration** ELG up to 5,000ppm range, BLG up to 30%
- The sensor module is designed for long-life with low average power consumption without compromising measurement precision and resolution.
- Virtual Real Time Clock allows data and events logging with time stamps.
- Events include sensor power on, logging start/stop, ABC self calibration, user initiated zero and background calibrations.
- I^2C or UART communication can be used to read logged data for built in modules.

131 Business Center Drive
Ormond Beach, FL 32174
(386) 872-765 Sales
(386) 256-4910 Support
www.CO2Meter.com
Sales@CO2Meter.com
Rev. 9 August 2017

Use scenario *CO_2Engine™ - BLG/ELG*

CO_2 Engine™ - BLG/ELG is a sensor module for CO2 concentration, temperature and relative humidity. Sensirion's SHT11 Temperature / RH sensor is installed on the board to measure temperature and relative humidity.

There are three ways to activate measurement/logging

- Jumper (set AnIn1 high)
  After power-on, sensor checks jumper presence, if jumper is not present (low level on input, AnIn1), sensor goes into sleep mode. If jumper is set (high level at input), sensor sleeps a predefined time (configured in EEPROM) and then start the measurement sequence. After measurement has been started the sensor wakes up periodically, makes measurements, stores result in on board non-volatile memory (if logger is activated) and goes into sleep mode until next measurement.

- Command "Force start measurement"
  Another way to start/stop measurements is with the commands "Force Start Measurements" and "Force Stop Measurements", the sensor will act in the same way as if the jumper was set/reset.

- Command "Single measurement"
  If only one measurement is desired the command "Single measurement" can be sent to the sensor. Then the sensor will measure once, store result in on board non-volatile memory (if logger is activated) and go back to sleep mode.

For correct timestamps sensors RTC has to be set after the sensor in powered.
User can read logged data via serial port (UART with standard SenseAir cable) alternatively I2C-to-USB bridge.

For correct timing it is important that RTC is set after battery is inserted.

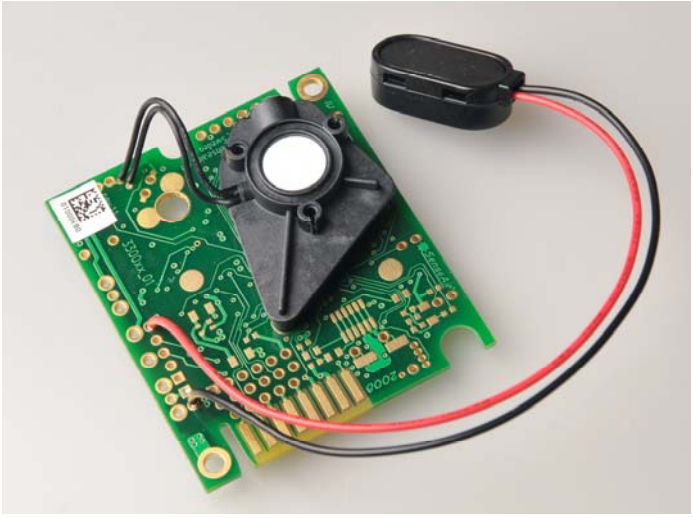

*Figure 2 **CO_2Engine™ -BLG** powered via Vbat+*

Drawings below show battery connection (with polarity) to the sensor (Vbat+), pin assignment of UART and I²C communication connectors.

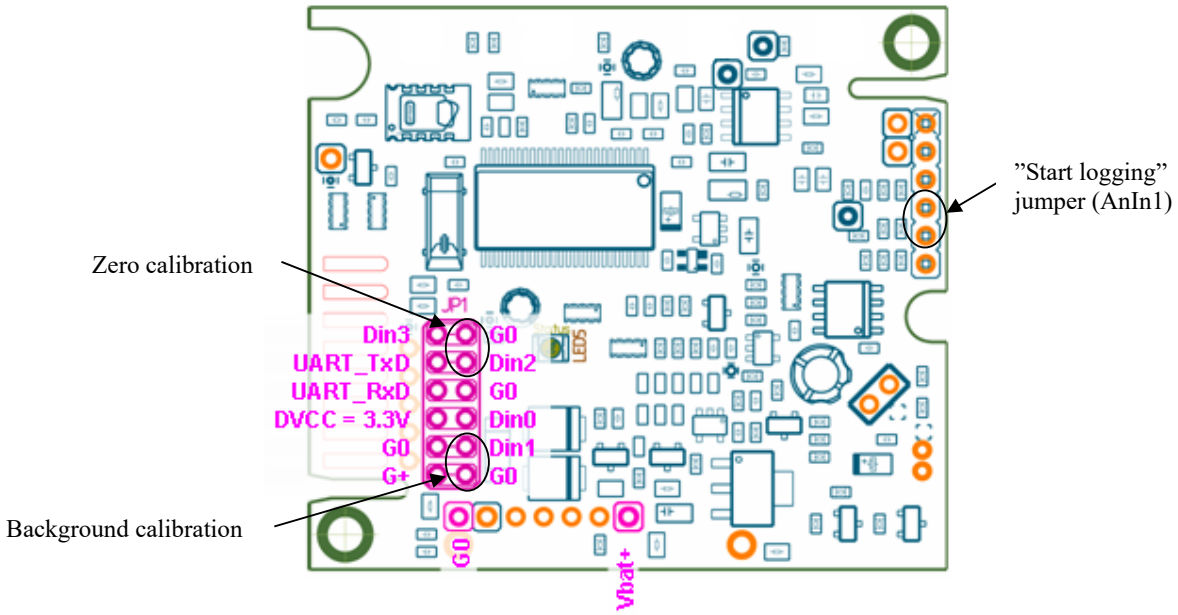

Figure 3 ***CO_2Engine™ -BLG/ELG*** *powered via Vbat+ and data read via UART terminal.*

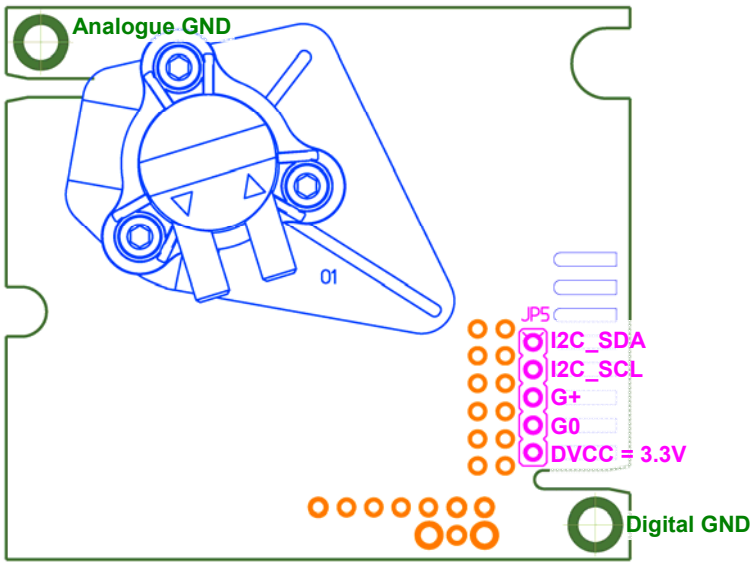

Figure 4 ***CO_2Engine™ -BLG*** *with I²C terminal.*

Terminal descriptions

Table below specifies what terminals and I/O options are available in the general **K33** platform *(see also the layout picture Fig 3)*.

Functional group	Descriptions and ratings
Power supply	
G0	Power supply minus terminal Sensor's reference (ground) terminal
G+ Referred to G0:	Power supply via protection circuit. Protected by series 3.3R resistor and zener diode Absolute maximum ratings 5.5 to 12V, stabilized to within 10%
Vbat+ Referred to G0:	Power supply directly to the system without protection circuit. Absolute maximum ratings 4.75 to 12V, stabilized to within 10% **Unprotected against reverse connection!**
Communication	
UART (UART_TxD, UART_RxD)	CMOS physical layer, ModBus communication protocol. (refer "Modbus on CO2 Engine and eSense rev2_00.pdf" or later version for details) UART_RxD line is configured as digital input. Input high level is 2.1V min Input low level is 0.8V max UART_TxD line is configured as digital output. Output high level is 2.3V (assuming 3.3V DVCC) min. Output low level is 0.75V max UART_RxD input is pulled up to DVCC = 3.3V by 56 kOhm UART_TxD output is pulled up to DVCC = 3.3V by 56 kOhm ABSOLUTE MAX RATING G0 -0.5V ….. DVCC + 0.5V
I2C extension. (I2C_SCL, I2C_SDA)	Pull-up to DVCC = 3.3V. (refer "I2C comm guide 2_10.pdf" or later version for details) ABSOLUTE MAX RATING G0 -0.5V ….. DVCC + 0.5V

Continuation on the next page

Functional group	Descriptions and ratings
Digital I/Os, used as Inputs in standard configuration. May be implemented as jumper field	
Din0 Din1 Din2 Din3	Digital switch inputs in standard configuration, Pull-up 56k to DVCC 3.3V. Driving it low or connecting to G0 activates input. Pull-up resistance is decreased to 4..10k during read of input or jumper. Advantages are lower consumption most of the time the input/jumper is kept low and larger current for jumpers read in order to provide cleaning of the contact. Din1 used for background calibration. Din2 used for zero calibration.
AnIn1	Input set to DVCC activates measurement/logging cycle, input released (or held low) set sensor into sleep, in sleep mode sensor check AnIn1 and support communication.

Table I. I/O notations used in this document for the K33 platform with some descriptions and ratings. Please, beware of ***the red colored texts that pinpoint important features*** *for the system integration!*

General PCB overview

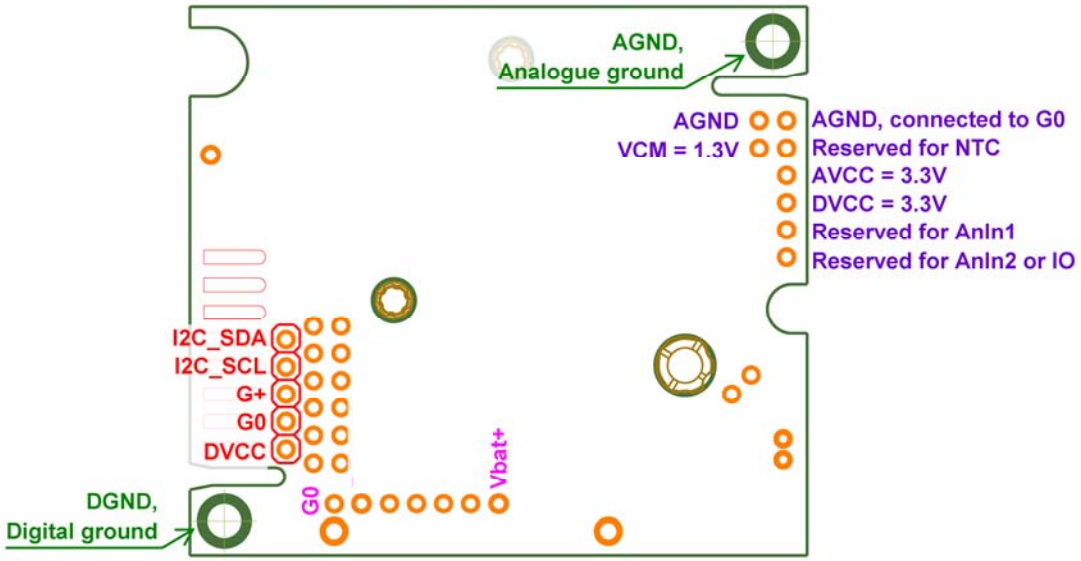

Figure 5 ***CO_2Engine™ -BLG/ELG*** *I/O notations and terminals*

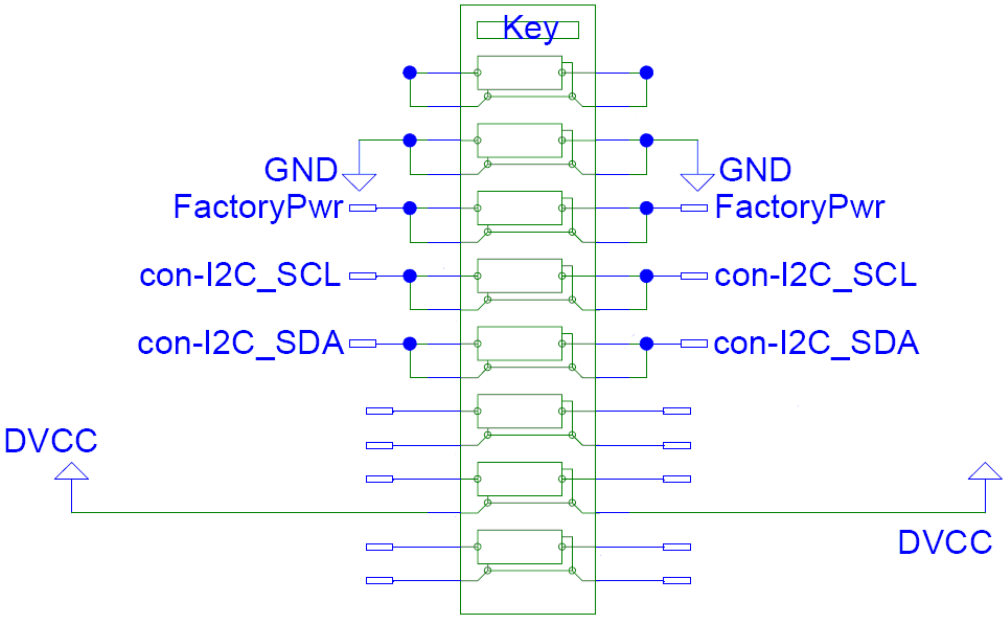

Figure 6 ***CO_2Engine™ -BLG/ELG*** *edge connecto,(seen from component side)*

CO_2Engine™ BLG/ELG – Default appearance technical specification

General Performance:

Storage Temperature Range .....-40 to +70 °C,
Storage Environment .....Non condensing, non corrosive environment [2]
Operating Temperature Range .....0 to 50 °C
Operating Humidity Range .....0 to 95% RH (non-condensing) [1]
Operating Environment .....Non corrosive environment [2]. Residential, commercial, industrial spaces used in
.....HVAC (Heating Ventilation and Air-Conditioning) systems.[4]
Sensor Life Expectancy .....> 10 years
Maintenance Interval .....Maintenance-free. See discussion of ABC algorithm on page 10.
Self-Diagnostics .....complete function check of the sensor module
Conformance with the standards .....RoHS directive 2002/95/EG

Electrical / Mechanical:

Power Input.....6-12 VDC[3] max rating, stabilized to within 10% powering sensor via Vbat+
6-14 VDC[3] max rating, stabilized to within 10% powering sensor via G+ (on board protection circuits)
Current Consumption.....~250µA (1 measurement/hour)
..... ~50µA in sleep
~60 mA average during active measurement sequence (~12s)
< 150 mA peak current (averaged during IR lamp ON, 100 msec)
< 250 mA peak power (during IR lamp start-up, the first 50 msec)
for maximum operating time (if powered by batteries), choose batteries that can deliver 250mA pulses without large voltage drops (for example batteries recommended for cameras)
Electrical Connections .....Vbat+, G+ and G0
Dimensions .....51 x 57 x 14 mm (Length x Width x Height) for BLG (0..30% measurement range)
.....51 x 57 x 12 mm (Length x Width x Height) for ELG (0..5000ppm measurement range)

CO_2 Measurement:

Sensing Method .....non-dispersive infrared (NDIR) waveguide technology with ABC, automatic background calibration algorithm (application specific)
Sampling Method .....diffusion
Response Time ($T_{1/e}$) .....<25 sec gas diffusion time
Measurement period .....5 min to 0.5 year interval, a measurement period less than 5 min can be used, but then specified accuracy on RH and temperature measurements are not guaranteed

ELG, CO2 module 0..5000ppm:
Repeatability .....± 20 ppm ± 1 % of measured value
Accuracy [5].....± 30 ppm ± 3 % of measured value

BLG, CO2 module 0..30%$_{vol}$:
Repeatability .....± 0,1 %vol. CO2 ± 2 % of measured value
Accuracy [5].....± 0,2 %vol. CO2 ± 3 % of measured value

Pressure Dependence .....+ 1.6 % reading per kPa deviation from normal pressure, 100 kPa

On-board calibration support.....Din1 switch input to trigger Background Calibration @ 400 ppm (0.04%$_{vol}$) CO_2
Din2 switch input to trigger Zero Calibration @ 0 ppm CO_2

Note 1: Sensors are 100% tested in production at 45C / 85%RH / 1000ppm CO_2 for one hour. For applications operating continuously in high humidity, contact SenseAir for further information.
Note 2: SO_2 enriched environments are excluded.
Note 3: Notice that absolute maximum rating is 12V, so sensor can not be used with 12V+-10% supply.
Note 4: Different options exist and can be customized depending on the application. Please, contact SenseAir for further information!
Note 5: Accuracy is specified over operating temperature range at normal pressure 1013 mBar. Specification is referenced to certified calibration mixtures. Uncertainty of calibration gas mixtures (+-2% currently) is to be added to the specified accuracy for absolute measurements.

CO_2Engine™ BLG/ELG - Default appearance technical specifications (continued)

Temperature Measurement:

Sensor ..... SHT11 from Sensirion (www.sensirion.com)
Measurement Range .....-40 to 60C
Accuracy [6,7] .....± 0.4C at 25C

Relative Humidity Measurement:

Sensor ..... SHT11 from Sensirion (www.sensirion.com)
Measurement Range .....0 to 100% RH non condensing
Accuracy [6,7] .....± 3% RH

Logger properties:

Logger Capacity .....5400 logging points if CO2 concentration, temperature and relative humidity are logged (with timestamp).

Logging Data .....Selectable, one data record can contain up to 14 bytes (max 4 variables)
Logging Period .....(1…255) * Measurement Period.
Delay since setting jumper .....0 to 255 seconds (5s in default configuration)

Note 6: Specification is provided by Sensirion.
Note 7: Minimum 5 minutes measurement period.

Maintenance

The models based on ***CO_2Engine™ K33*** platform are basically maintenance free in normal environments thanks to the built-in self-correcting *ABC* algorithm.

ABC algorithm

The default sensor OEM unit is maintenance free in normal environments thanks to the built-in self-correcting ***ABC* algorithm** *(Automatic Baseline Correction)*. This algorithm constantly keeps track of the sensor's lowest reading over a predefined period and slowly corrects for any long-term drift detected as compared to the expected fresh air value of 400 ppm CO_2.
Since timing (time between measurements) can be configured in BLG/ELG it is important to make sure that the sensor has possibility to measure "fresh air" during the predefined period.
It is recommended that ABC configuration is optimized for its tasks during a dialog between SenseAir and the OEM customer. In default configuration for BLG/ELG sensors ABC is switched off.

Calibration

Rough handling and transportation might, result in a reduction of sensor reading accuracy. For post calibration convenience, in the event that one cannot wait for the ABC algorithm to cure any calibration offset, two switch inputs Din1 and Din2 are defined for the operator to select one out of two prepared calibration codes. If Din1 is shorted to ground during a measurement cycle (flashing lamp), the internal calibration code **bCAL** *(background calibration)* is executed, in which case it is assumed that the sensor is operating in a fresh air environment (400 ppm CO_2). If Din2 is shorted instead during a measurement cycle (flashing lamp), the alternative operation code **zCAL** *(zero calibration)* is executed in which case the sensor must be purged by some gas mixture free from CO_2 (i.e. Nitrogen or Soda Lime CO_2 scrubbed air).

Make sure that the sensor environment is steady and calm during calibration!

Input Switch Terminal *(normally open)*	**Default function** *(when closed for minimum 8 seconds)*
Din1	**bCAL** (background calibration) assuming 400 ppm CO_2 sensor exposure
Din2	**zCAL** (zero calibration) assuming 0 ppm CO_2 sensor exposure

Table II. Switch input default configurations for ***CO_2Engine™ K33***

Self-diagnostics

The system contains complete self-diagnostic procedures. A full system test is executed automatically every time the power is turned on. In addition, constantly during operation, the sensor probes are checked against failure by checking the valid dynamic measurement ranges. All EEPROM updates, initiated by the sensor itself, as well as by external connections, are checked by subsequent memory read back and data comparisons. These different system checks return error bytes to the system RAM. If this byte is not zero, the logic output terminal **Status** will be put into Low level state. The full error codes are available from the UART port or via I^2C communication. *Offset regulation error* and *Out of Range* are the only bits that are reset automatically after return to normal state. All other error bits have to be reset after return to normal by UART/I2C overwrite, or by power off/on.

Error code and action plan (error code can be read via one of communication channels)

Bit #	Error code	Error description	Suggested action
0	1	**Fatal Error**	Try to restart sensor by power OFF/ON. Contact local distributor.
1	2	**Offset regulation error**	Try to restart sensor by power OFF/ON. Contact local distributor.
2	4	**Sensirion com error** Unable to communicate with Sensirion (Temp/RH) sensor.	Try to restart sensor by power OFF/ON. Check detailed settings and configuration with software tools. Contact local distributor.
3			
4	16	**DetTemp out of range**. Indicate high (out of range) detector temperature.	
5	32	**CO2 out of range** Indication of high (out of range) CO2 level.	
6	64	**Memory error** Error during memory operations.	
7	128	**Sensirion space temp out of range**	

Table III. Switch input default configurations for ***CO_2Engine™ K33***

Remark*: If several errors are detected at the same time the different error code numbers will be added together into one single error code!*

Frequently asked Questions - Programming

1- If I send the stop command, Is it only the CO2 measurement process that is stopped, or is the sensor not going to respond to any other request except a start measurement request?

   When receiving a stop command sensor finishes its present task and goes into sleep mode (to minimize current consumption), in sleep mode sensor wakes up periodically (1s) and for example check the jumper, activity on the communication lines will also wake up the sensor (see I2C communication guide for details).

2- If I stop the measurement, are all the other functions still active, can I still read/write from the sensor? Can I still read the last CO2 value and temperature while the sensor is stopped?

   Yes, communication is possible after stop measurement.

3- When a start measurement CMD is sent, what is the delay to the effective start of the measurement process (how much time after is the sensor normally starting to hold the bus CLK)?

   Standard time to measurement is 1 minute (same for start measurement command and jumper set), measurement sequence takes ~20s

4- How quickly (immediately?) after the end of the bus hold can I send a stop command ? (or is it better to leave the sensor running for a minimum delay?)

   It is recommended to wait until after measurement sequence has finished and you have read new data before sending stop command (~80s)

5- Should the light stop flashing when the stop measurement command is sent?

   Not immediately, sensor will finish ongoing measurement sequence before going to sleep – stop measuring.

SECTION 23 73 23

MiniSplit HVAC System

M-SERIES

SUBMITTAL DATA: MFZ-KJ09NA-U1 & MUFZ-KJ09NAHZ-U1

9,000 BTU/H FLOOR-MOUNTED HEAT PUMP SYSTEM

MITSUBISHI ELECTRIC

Job Name:	
System Reference:	Date:

Indoor Unit: MFZ-KJ09NA-U1

Wireless Remote Controller

Outdoor Unit: MUFZ-KJ09NAHZ-U1

ACCESSORIES:

Indoor Unit

- ☐ Condensate Pump (BlueDiamond X87-711/721; 115/230V)
- ☐ Condensate Pump (Sauermann SI30-115/230; 115/230V)
- ☐ Anti-Allergy Enzyme Filter (MAC-408FT-E)
- ☐ Drain Pan Level Sensor (DPLS2)

Outdoor Unit

- ☐ Outdoor Mounting Pad (ULTRILITE1)
- ☐ 3-1/4" Mounting Base [Pair] (DSD-400P)
- ☐ Air Outlet Guide (MAC-889SG)
- ☐ Wall Mounting Bracket (QSWB2000M-1)

Controls

- ☐ Wireless Controller (MHK1)
- ☐ Wired Remote Controller PAR-32MAA (Requires MAC-333IF-E)
- ☐ Wireless Interface for kumo cloud™ (PAC-WHS01WF-E)
- ☐ Thermostat Interface (PAC-US444CN-1)

SPECIFICATIONS:

Rated Conditions (Capacity / Input)		
Cooling[1]	Btu/h / W	9,000 / 570
Heating at 47° F[2]	Btu/h / W	11,000 / 750

Capacity Range		Minimum	Maximum
Cooling[1]	Btu/h	2,300	14,000
Heating at 47° F[2]	Btu/h	2,900	19,000
Heating at 17° F[3]	Btu/h	-	13,400
Heating at 5° F[4]	Btu/h	-	11,000

[1] Cooling | Indoor: 80° F(27° C)DB / 67° F(19° C)WB; Outdoor: 95° F(35° C)DB / 75° F(24° C)WB*
[2] Heating at 47°F | Indoor: 70° F (21° C)DB / 60° F (16° C)WB; Outdoor: 47° F (8° C)DB / 43° F (6° C)WB*
[3] Heating at 17° F | Indoor: 70° F(21° C)DB / 60° F(16° C)WB; Outdoor: 17° F(-8° C)DB / 15° F(-9° C)WB*
[4] Heating at 5° F | Indoor: 70° F (21° C)DB / 60° F(16° C)WB; Outdoor: 5° F(-15° C) DB / 5° F(-15° C)WB*
* Rating Conditions per AHRI Standard:

Operating Conditons (Indoor Intake Air Temp.) (Max./ Min.)	
Cooling[5]	90° F (32° C) DB / 67° F (19° C) DB
Heating	80° F (27° C) DB / 70° F (21° C) DB

Operating Conditons (Outdoor Intake Air Temp.) (Max./ Min.)	
Cooling[5]	115 F (46° C) DB / 14° F (-10° C) DB
Heating	75° F (24° C) DB / -4° F (-20° C) DB**

[5] Applications should be restricted to comfort cooling only; equipment cooling applications are not recommended for low ambient temperature conditions.
** System cuts out at -18° F (-28° C) to avoid thermistor error and automatically restarts at -14° F (-26° C).

AHRI Efficiency Ratings	
SEER / HSPF	28.2 / 13.0
COP at 47° F 17° F	4.3 / 2.71

Energy Star®	Yes

ENERGY STAR products are third-party certified by an EPA-recognized Certification Body.

Electrical		
Electrical Power Requirements		208 / 230V, 1-Phase, 60 Hz
MCA: Indoor | Outdoor	A	1 | 11
Recommended Fuse/ Breaker Size	A	15

Indoor Unit		
Blower Motor ECM | Output		0.62 F.L.A. | 30 W
SHF | Moisture Removal		0.79 / 1.4 pt./h
Field Drainpipe Size O.D.	In.(mm)	5/8 (15)

Outdoor Unit		
Compressor		DC INVERTER-driven Twin Rotary
Fan Motor (ECM)	F.L.A.	0.50

Airflow Rate (Quiet - Lo - Med - Hi - Super Hi)			
Indoor (Cooling)	DRY	CFM	138-198-272-360-417
	WET		117-168-231-306-354
Indoor (Heating)	DRY		138-191-254-328-417
Outdoor			1,215 / 1,201

Sound Pressure Level (Quiet - Lo - Med - Hi - Super Hi)		
Indoor: Cooling | Heating	dB(A)	21-27-34-41-46 | 21-27-34-40-46
Outdoor: Cooling | Heating		48 | 50

Unit Dimensions		
Indoor | Outdoor (H x W x D)	In.	23-5/8 x 29-17/32 x 8-15/32 21-5/8 x 31-1/2 x 11-1/4
	mm	600 x 750 x 215 | 550 x 800 x 285

Package Dimensions		
Indoor | Outdoor (H x W x D)	In.	27-3/4 x 32-3/4 x 12 24-1/2 x 37 x 15
	mm	693 x 816 x 275 | 630 x 940 x 380

Unit/Package Weight		
Unit: Indoor | Outdoor	Lbs.(kg)	33 (15) | 83 (38)
Package: Indoor | Outdoor	Lbs.(kg)	41 (18.5) | 90 (40.5)

External Finish	
Indoor | Outdoor	Munsell 1.0Y 9.2 / 0.2 | Munsell No. 3Y 7.8 / 1.1

Refrigerant	R410A; 2 lb. 10 oz.

Refrigerant Piping (Flared)		
Liquid (High Pressure)	In.(mm)	1/4 (6.35)
Gas (Low Pressure)		3/8 (9.52)
Max. Total Refrigerant Pipe Length (Height Diff.)	Ft. (m)	40 (12)
Max. Total Refrigerant Pipe Length (Length.)		65 (20)

Specifications are subject to change without notice.

© 2016 Mitsubishi Electric US, Inc.

DIMENSIONS: MFZ-KJ09NA-U1 & MUFZ-KJ09NAHZ-U1

MFZ-KJ09NA-U1

Unit: in.

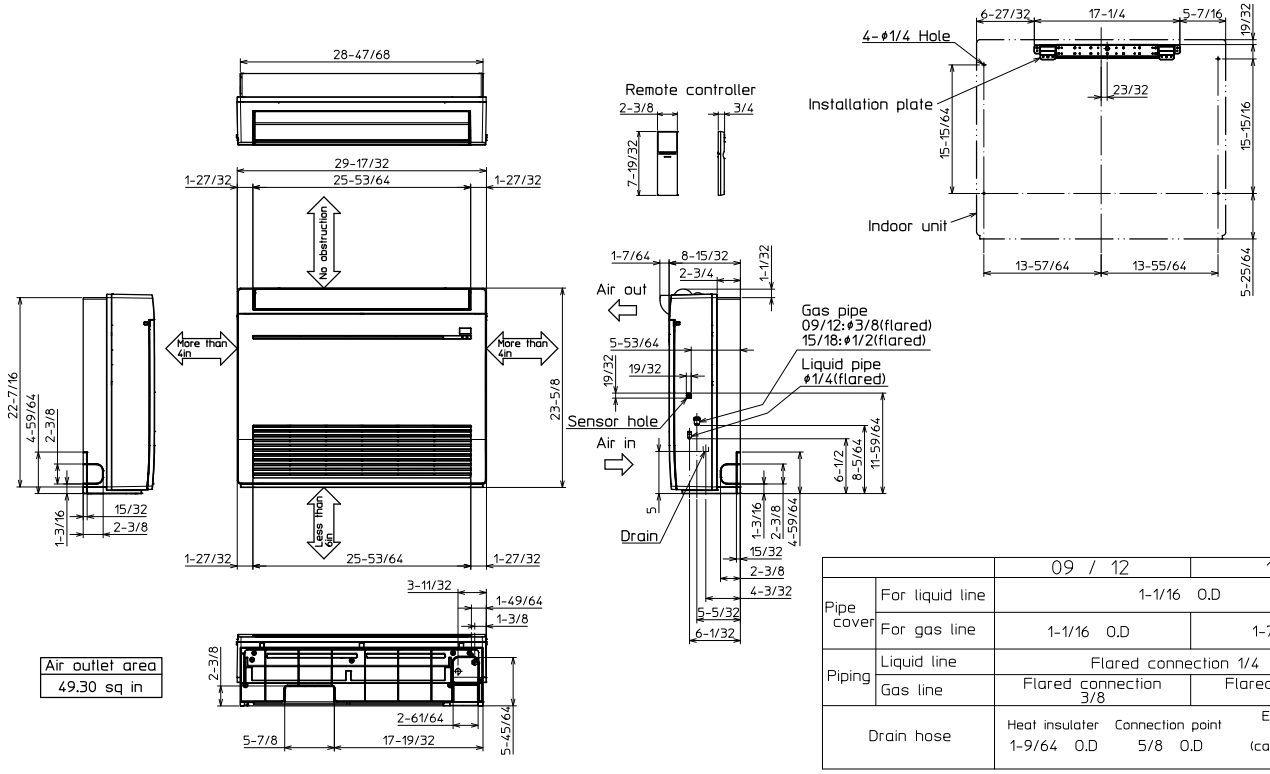

		09 / 12	15 / 18
Pipe cover	For liquid line	1-1/16 O.D	
	For gas line	1-1/16 O.D	1-7/32 O.D
Piping	Liquid line	Flared connection 1/4	
	Gas line	Flared connection 3/8	Flared connection 1/2
Drain hose		Heat insulater 1-9/64 O.D / Connection point 5/8 O.D	Effective length 13-25/32 (case of right backward piping)

MUFZ-KJ09NAHZ-U1

Unit: in. (mm)

REQUIRED SPACE

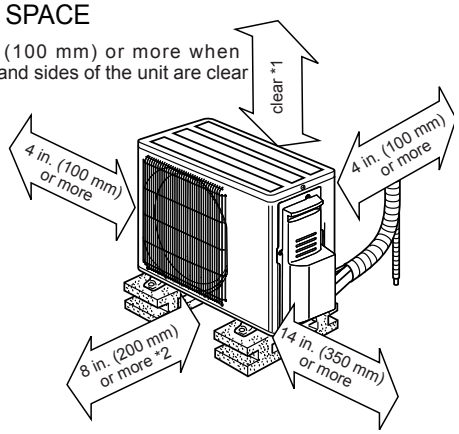

*2 When any 2 sides of left, right and rear of the unit are clear

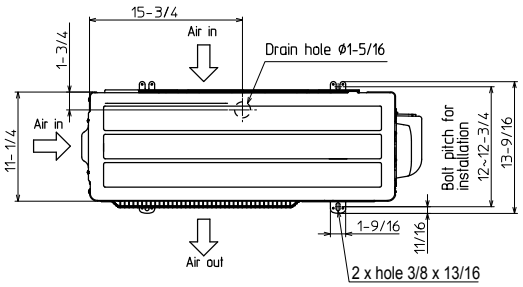

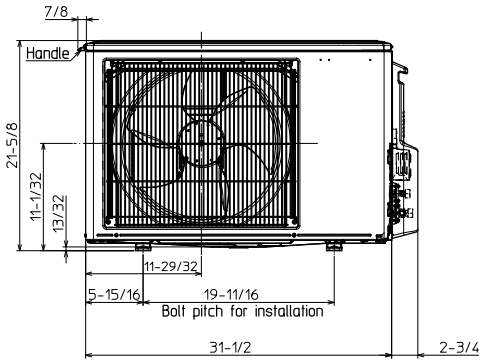

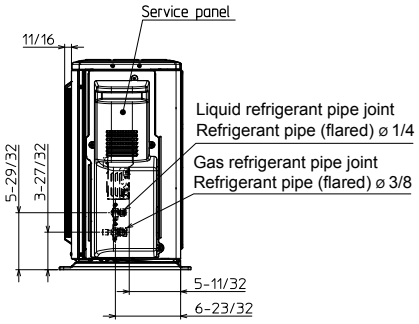

MITSUBISHI ELECTRIC
COOLING & HEATING

1340 Satellite Boulevard. Suwanee, GA 30024
Toll Free: 800-433-4822 www.mehvac.com

FORM# MFZ-KJ09NA-U1 / MUFZ-KJ09NAHZ-U1 - 201607Ve2

Specifications are subject to change without notice.

© 2016 Mitsubishi Electric US, Inc.

MITSUBISHI ELECTRIC

SPLIT-TYPE AIR CONDITIONERS

Revision A:
- 3. SPECIFICATION and 4. OUTLINES AND DIMENSIONS have been modified.

Please void OBH752.

INDOOR UNIT

No. OBH752
REVISED EDITION-A

SERVICE MANUAL

Models

MFZ-KJ09NA - U1
MFZ-KJ12NA - U1
MFZ-KJ15NA - U1
MFZ-KJ18NA - U1

Outdoor unit service manual
MUFZ-KJ•NAHZ Series (OBH753)
MXZ-C•NA, MXZ-C•NAHZ Series (OBH702, OCH573)

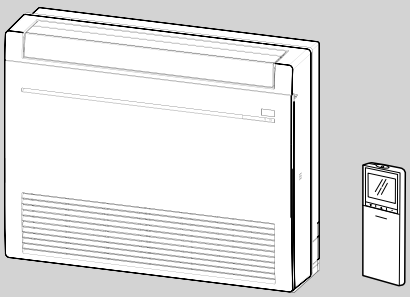

CONTENTS

1. TECHNICAL CHANGES 3
2. PART NAMES AND FUNCTIONS 4
3. SPECIFICATION 5
4. OUTLINES AND DIMENSIONS 7
5. WIRING DIAGRAM 8
6. REFRIGERANT SYSTEM DIAGRAM 9
7. SERVICE FUNCTIONS 10
8. MICROPROCESSOR CONTROL 12
9. TROUBLESHOOTING 21
10. DISASSEMBLY INSTRUCTIONS 36

PARTS CATALOG (OBB752)

NOTE:
- This service manual describes technical data of the indoor units.
- RoHS compliant products have <G> mark on the spec name plate. For servicing of RoHS compliant products, refer to the RoHS Parts List.

Use the specified refrigerant only

Never use any refrigerant other than that specified.

Doing so may cause a burst, an explosion, or fire when the unit is being used, serviced, or disposed of.
Correct refrigerant is specified in the manuals and on the spec labels provided with our products.
We will not be held responsible for mechanical failure, system malfunction, unit breakdown or accidents caused by failure to follow the instructions.

Revision A:

• 3. SPECIFICATION and 4. OUTLINES AND DIMENSIONS have been modified.

1 TECHNICAL CHANGES

MFZ-KJ09NA-U1
MFZ-KJ12NA-U1
MFZ-KJ15NA-U1
MFZ-KJ18NA-U1

1. New model

2 PART NAMES AND FUNCTIONS

MFZ-KJ09NA MFZ-KJ12NA MFZ-KJ15NA MFZ-KJ18NA

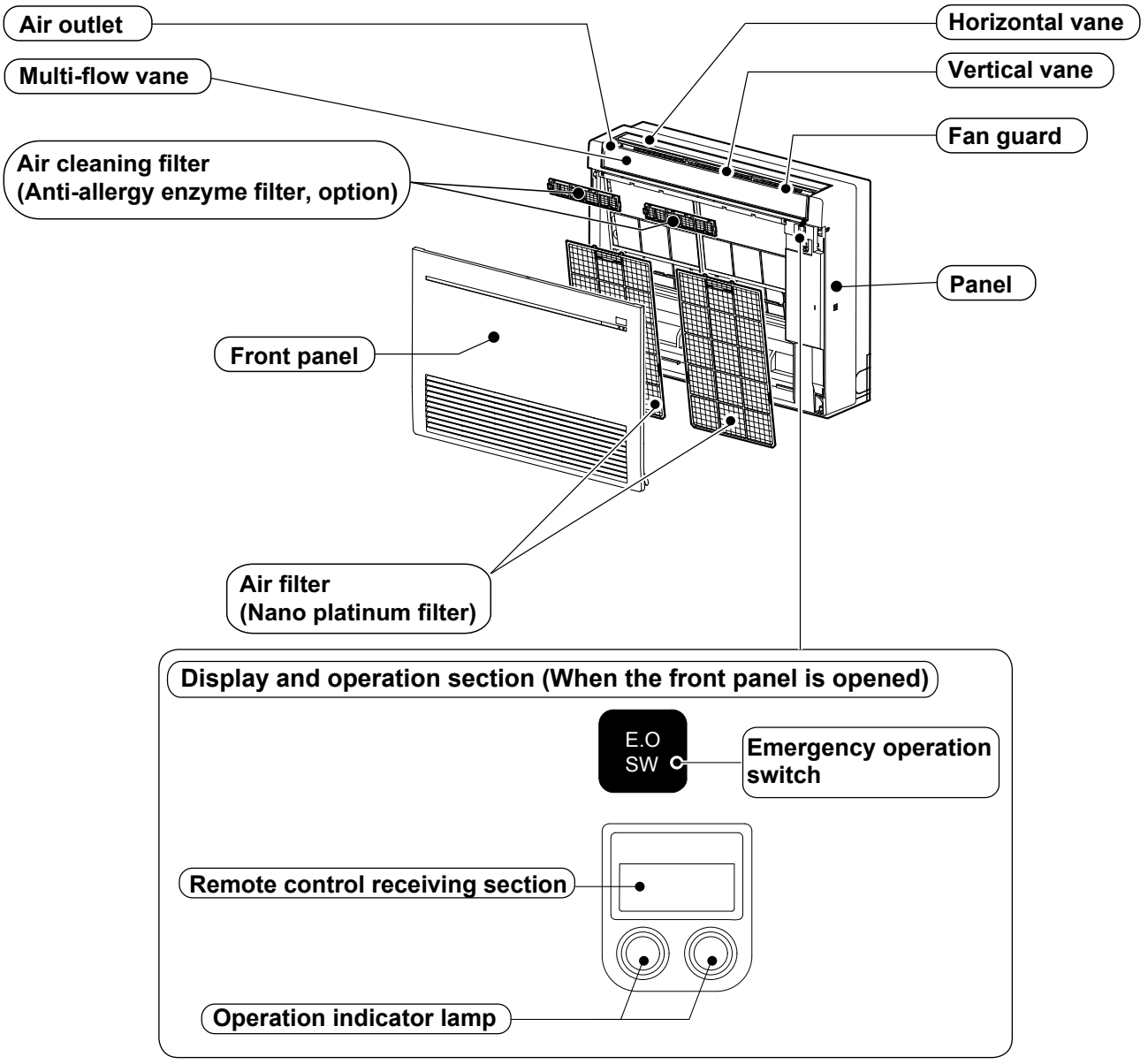

ACCESSORIES

		MFZ-KJ09NA MFZ-KJ12NA MFZ-KJ15NA MFZ-KJ18NA
①	Drain hose	1
②	Remote controller holder	1
③	Fixing screw for ② 3.5 x 16 mm (Black)	2
④	Pipe cover	1
⑤	Band	2
⑥	Battery (AAA) for remote controller	2
⑦	Indoor unit mounting bracket	1
⑧	Fixing screw for ⑦ 4 x 25 mm	5
⑨	Wood screw for the indoor unit fixation	4
⑩	Washer of ⑨	4
⑪	Felt tape (Used for left or left-rear piping)	1
⑫	Wireless remote controller	1

3 SPECIFICATION

1. Single connection

Indoor model			MFZ-KJ09NA	MFZ-KJ12NA	MFZ-KJ15NA	MFZ-KJ18NA
Power supply	V, phase, Hz		208/230, 1, 60			
Max. fuse size (time delay)/ Disconnect switch		A	15		20	
Airflow Super High - High - Med. - Low - Quiet	COOL Dry (Wet)	CFM	417 - 360 - 272 - 198 - 138 (354 - 306 - 231 - 168 - 117)		431 - 392 - 311 - 254 - 198 (366 - 333 - 264 - 216 - 168)	491 - 420 - 328 - 254 - 198 (417 - 357 - 279 - 216 - 168)
	HEAT Dry	CFM	417 - 328 - 254 - 191 - 138		470 - 399 - 328 - 268 - 212	
Sound level Super High - High - Med. - Low - Quiet	Cooling	dB (A)	46 - 41 - 34 - 27 - 21		47 - 43 - 38 - 33 - 28	50 - 45 - 39 - 33 - 28
	Heating	dB (A)	46 - 40 - 34 - 27 - 21		49 - 45 - 40 - 35 - 29	49 - 45 - 40 - 35 - 29
Cond. drain connection O.D.		in.	5/8			
Dimensions	W	in.	29-17/32			
	D		8-15/32			
	H		23-5/8			
Weight		lb.	33			
External finish			White			
Control voltage (by built-in transformer)			12 - 24 VDC			

NOTE: Test conditions are based on ARI 210/240.

2. Multi connection

Indoor model			MFZ-KJ09NA	MFZ-KJ12NA	MFZ-KJ15NA	MFZ-KJ18NA
Power supply	V, phase, Hz		208/230, 1, 60			
Max. fuse size (time delay)/ Disconnect switch		A	15		20	
Airflow Super High - High - Med. - Low - Quiet	COOL Dry (Wet)	CFM	275 - 251 - 208 173 - 138 (234 - 213 - 177 - 147 - 117)		374 - 328 - 282 - 237 - 198 (318 - 279 - 240 - 201 - 168)	
	HEAT Dry	CFM	343 - 219 - 180 - 159 - 138		470 - 325 - 290 - 254 - 212	
Sound level Super High - High - Med. - Low - Quiet	Cooling	dB (A)	38 - 34 - 30 - 25 - 21		43 - 40 - 36 - 31 - 28	
	Heating	dB (A)	41 - 32 - 27 - 24 - 21		49 - 39 - 36 - 34 - 29	
Cond. drain connection O.D.		in.	5/8			
Dimensions	W	in.	29-17/32			
	D		8-15/32			
	H		23-5/8			
Weight		lb.	33			
External finish			White			
Control voltage (by built-in transformer)			12 - 24 VDC			

NOTE: Test conditions are based on ARI 210/240.

3-1. OPERATING RANGE

(1) POWER SUPPLY

	Rated voltage	Guaranteed voltage (V)
Indoor unit	208/230 V 1 phase 60 Hz	Min. 187 208 230 Max. 253

(2) OPERATION

Mode	Condition	Intake air temperature (°F)			
		Indoor		Outdoor	
		DB	WB	DB	WB
Cooling	Standard temperature	80	67	95	—
	Maximum temperature	90	73	115	—
	Minimum temperature	67	57	14	—
	Maximum humidity	78%		—	
Heating	Standard temperature	70	60	47	43
	Maximum temperature	80	67	75	65
	Minimum temperature	70	60	-13	-14

3-2. OUTLET AIR SPEED AND COVERAGE

1. Single connection

Model	Mode	Function	Airflow (CFM)	Air speed (ft./s.)	Coverage (ft.)
MFZ-KJ09NA **MFZ-KJ12NA**	HEAT	Dry	417	20.3	29.6
	COOL	Dry	417	20.3	29.6
		Wet	354	17.2	25.3
MFZ-KJ15NA	HEAT	Dry	470	22.9	33.3
	COOL	Dry	431	21.0	30.6
		Wet	366	17.8	26.2
MFZ-KJ18NA	HEAT	Dry	470	22.9	33.3
	COOL	Dry	491	23.9	34.8
		Wet	417	20.3	29.7

- The air coverage is the figure up to the position where the air speed is 1 ft./s., when air is blown out horizontally from the unit properly at the High speed position.
  The coverage should be used only as a general guideline since it varies according to the size of the room and furniture arranged inside the room.

2. Multi connection

Model	Mode	Function	Airflow (CFM)	Air speed (ft./s.)	Coverage (ft.)
MFZ-KJ09NA **MFZ-KJ12NA**	HEAT	Dry	343	16.7	24.5
	COOL	Dry	275	13.4	19.8
		Wet	234	11.4	16.9
MFZ-KJ15NA **MFZ-KJ18NA**	HEAT	Dry	470	22.9	33.3
	COOL	Dry	374	18.2	26.7
		Wet	318	15.5	22.8

4 OUTLINES AND DIMENSIONS

MFZ-KJ09NA MFZ-KJ12NA MFZ-KJ15NA MFZ-KJ18NA

Unit: inch

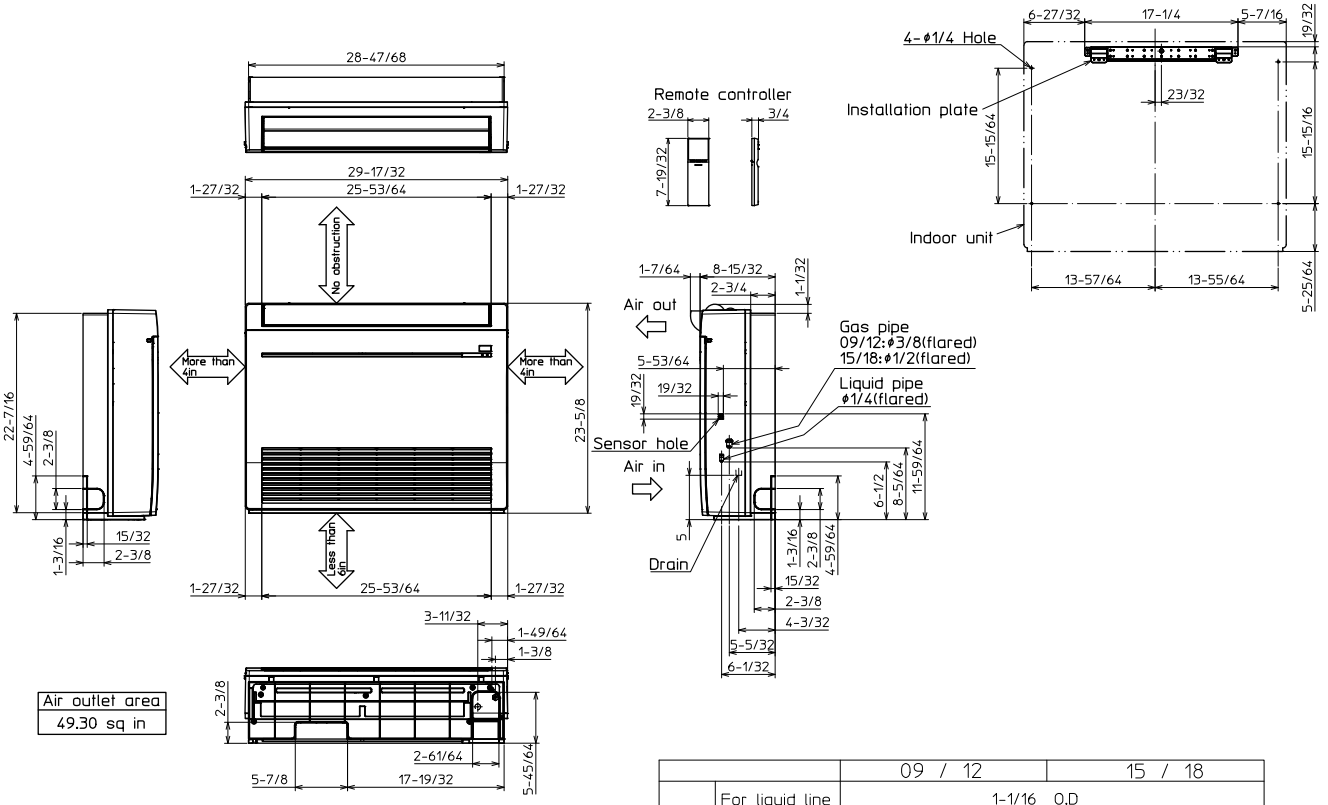

		09 / 12	15 / 18
Pipe cover	For liquid line	1-1/16 O.D	
	For gas line	1-1/16 O.D	1-7/32 O.D
Piping	Liquid line	Flared connection 1/4	
	Gas line	Flared connection 3/8	Flared connection 1/2
Drain hose		Heat insulater 1-9/64 O.D / Connection point 5/8 O.D	Effective length 13-25/32 (case of right backward piping)

5 WIRING DIAGRAM

MFZ-KJ09NA MFZ-KJ12NA MFZ-KJ15NA MFZ-KJ18NA

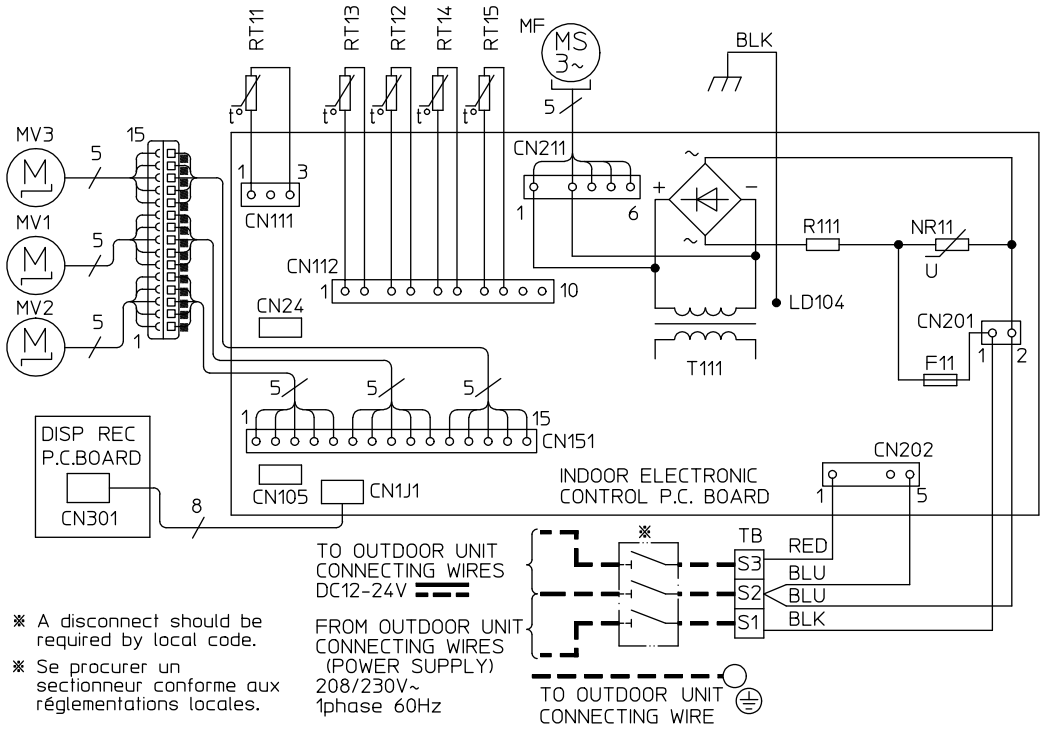

※ A disconnect should be required by local code.

※ Se procurer un sectionneur conforme aux réglementations locales.

SYMBOL	NAME
MF	FAN MOTOR
MV1	HORIZONTAL VANE MOTOR (FRONT)
MV2	HORIZONTAL VANE MOTOR (BACK)
MV3	MULTI-FLOW VANE MOTOR
F11	FUSE (T3.15AL250V)
T111	TRANSFORMER
TB	TERMINAL BLOCK
RT11	ROOM TEMP. THERMISTOR
RT12	COIL TEMP. THERMISTOR(MAIN1)
RT13	COIL TEMP. THERMISTOR(SUB)
RT14	COIL TEMP. THERMISTOR(MAIN2)
RT15	COIL TEMP. THERMISTOR(MAIN3)
NR11	VARISTOR
R111	RESISTOR

6 REFRIGERANT SYSTEM DIAGRAM

MFZ-KJ09NA MFZ-KJ12NA MFZ-KJ15NA MFZ-KJ18NA **Unit: inch (mm)**

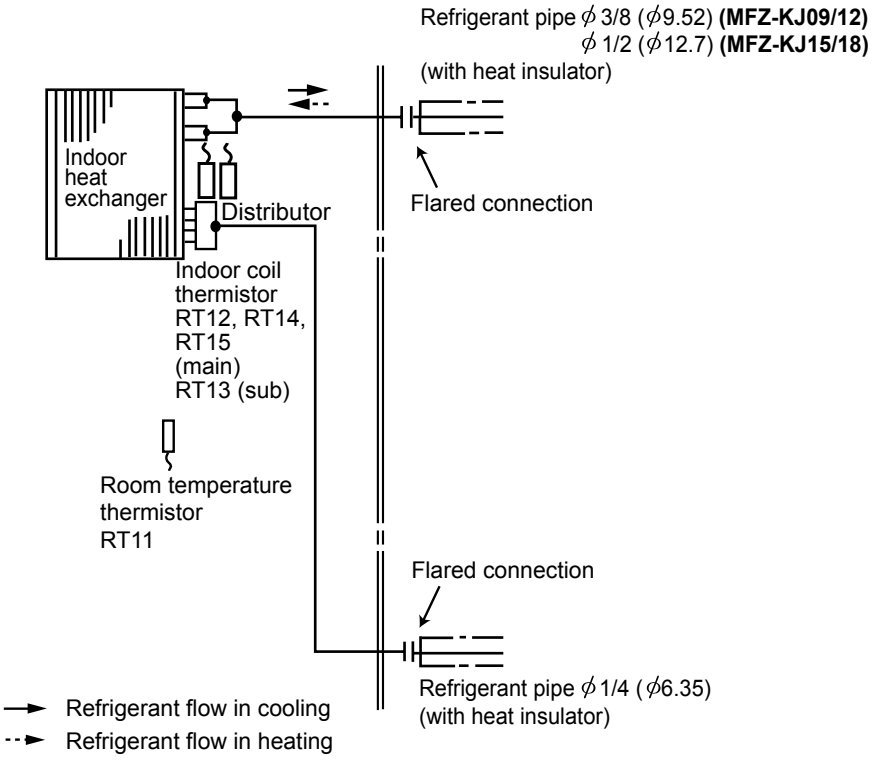

7 SERVICE FUNCTIONS

MFZ-KJ09NA MFZ-KJ12NA MFZ-KJ15NA MFZ-KJ18NA

7-1. TIMER SHORT MODE

- For service, the following set time can be shortened by bridging the timer short mode point on the electronic control P.C. board. (Refer to 9-7.)
- The set time for the ON/OFF timer can be reduced to 1 second for each minute.
- After the breaker is turned on, the time for starting the compressor, which normally takes 3 minutes, can be reduced to 3 seconds. Restarting the compressor, which takes 3 minutes, cannot be reduced.

7-2. HOW TO SET REMOTE CONTROLLER EXCLUSIVELY FOR A PARTICULAR INDOOR UNIT

A maximum of 4 indoor units with wireless remote controllers can be used in a room.
To operate the indoor units individually with each remote controller, assign a number to each remote controller according to the number of the indoor unit.

This setting can be set only when all the following conditions are met:

- The remote controller is powered OFF.
- Weekly timer is not set.
- Weekly timer is not being edited.

1. How to modify the electronic control P.C. board

Turn OFF the power supply before modification. To assign a number to each indoor unit , cut off “JR05” and “JR06” on the electronic control P.C. board as shown in Table 1. (Refer to 9-7.)

Table 1

	JR05	JR06
Unit No. 1	No modification	No modification
Unit No. 2	Cut off JR05	No modification
Unit No. 3	No modification	Cut off JR06
Unit No. 4	Cut off JR05	Cut off JR06

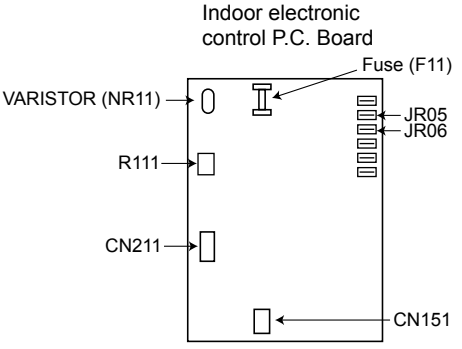

2. How to set the remote controller

(1) Hold down [1~4] button on the remote controller for 2 seconds to enter the pairing mode.
(2) Press [1~4] button again and assign a number to each remote controller.
Each press of [1~4] button advances the number in the following order: 1 → 2 → 3 → 4.
(3) Press [EDIT/SEND SET] button to complete the pairing setting.

After the setting, turn ON the power supply and with the remote controller headed towards the indoor unit, press the STOP/OPERATE (OFF/ON) button. If 1 or 2 beeps are heard from the indoor unit, the setting is completed correctly.
The remote controller that first sends a signal to an indoor unit will be regarded as the remote controller for the indoor unit.
Once they are set, the indoor unit will only receive the signal from the assigned remote controller afterwards.

7-3. AUTO RESTART FUNCTION

When the indoor unit is controlled with the remote controller, the operation mode, the set temperature, and the fan speed are memorized by the indoor electronic control P.C. board. “AUTO RESTART FUNCTION” automatically starts operation in the same mode just before the shutoff of the main power.

Operation

① If the main power has been cut, the operation settings remain.

② After the power is restored, the unit restarts automatically according to the memory.
(However, it takes at least 3 minutes for the compressor to start running.)

How to disable “AUTO RESTART FUNCTION”

① Turn off the main power for the unit.

② Cut the Jumper wire to JR77 on the indoor electronic control P.C. board. (Refer to 9-7.)

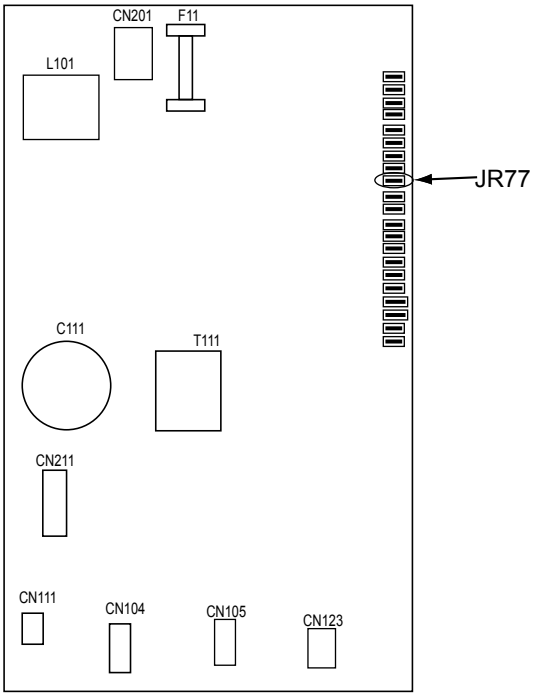

NOTE:

- The operation settings are memorized when 10 seconds have passed after the indoor unit was operated with the remote controller.
- If main power is turned OFF or a power failure occurs while AUTO START/STOP timer is active, the timer setting is cancelled.
- If the unit has been off with the remote controller before power failure, the auto restart function does not work as the power button of the remote controller is off.
- To prevent breaker OFF due to the rush of starting current, systematize other home appliance not to turn ON at the same time.
- When some air conditioners are connected to the same supply system, if they are operated before power failure, the starting current of all the compressors may flow simultaneously at restart.
  Therefore, the special counter measures are required to prevent the main voltage-drop or the rush of the starting current by adding to the system that allows the units to start one by one.

8 MICROPROCESSOR CONTROL

MFZ-KJ09NA MFZ-KJ12NA MFZ-KJ15NA MFZ-KJ18NA

WIRELESS REMOTE CONTROLLER

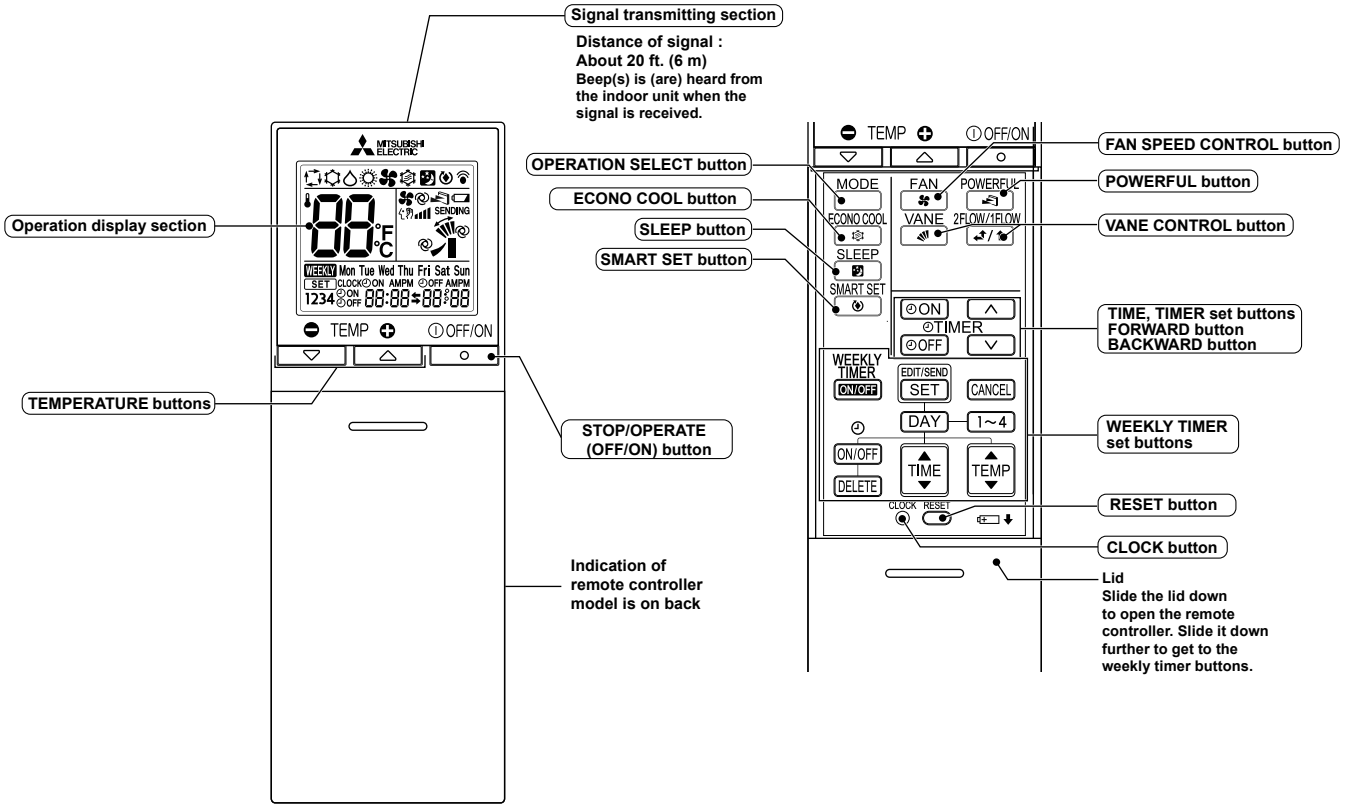

NOTE: Last setting will be stored after the unit is turned OFF with the remote controller. Indoor unit receives the signal of the remote controller with beeps.

INDOOR UNIT DISPLAY SECTION

Operation Indicator lamp

The operation indicator at the right side of the indoor unit indicates the operation state.

•The following indication applies regardless of shape of the indication.

Indication	Operation state	Room temperature
● ●	The unit is operating to reach the set temperature	About 4 °F (2°C) or more away from set temperature
● ○	The room temperature is approaching the set temperature	About 2 to 4 °F (1 to 2°C) from set temperature
● ☼	Standby mode (only during multi system operation)	—

● Lighted
☼ Blinking
○ Not lighted

8-1. COOL (☼) OPERATION

(1) Press STOP/OPERATE (OFF/ON) button.
OPERATION INDICATOR lamp of the indoor unit turns on with a beep tone.
(2) Select COOL mode with OPERATION SELECT button.
(3) Press TEMPERATURE buttons TEMP ⊖ or ⊕ button to select the desired temperature. The setting range is 61 - 88°F (16 - 31°C).

1. Coil frost prevention

The compressor operational frequency is controlled by the temperature of the indoor heat exchanger to prevent the coil from frosting.
When the temperature of indoor heat exchanger becomes too low, the coil frost prevention mode works.
The indoor fan operates at the set speed and the compressor stops. This mode continues until the temperature of indoor heat exchanger rises.

2. Low outside temperature operation

When the outside temperature is lower, low outside temperature operation starts, and the outdoor fan slows or stops.

3. Indoor fan speed control

When the thermostat turns OFF, the indoor fan operates at the setting fan speed.

8-2. DRY (△) OPERATION

(1) Press STOP/OPERATE (OFF/ON) button.
OPERATION INDICATOR lamp of the indoor unit turns on with a beep tone.
(2) Select DRY mode with OPERATION SELECT button.
(3) The set temperature is determined from the initial room temperature.

1. Coil frost prevention

Coil frost prevention works the same way as that in COOL mode. (8-1.1.)

2. Low outside temperature operation

Low outside temperature operation works the same way as that in COOL mode. (8-1.2.)

3. Indoor fan speed control

Indoor fan speed control works the same way as that in COOL mode. (8-1.3.)
However in AUTO setting, the fan speed changes.

8-3. FAN (✿) OPERATION

(1) Press STOP/OPERATE (OFF/ON) button.
OPERATION INDICATOR lamp of the indoor unit turns on with a beep tone.
(2) Select FAN mode with OPERATION SELECT button.
(3) Select the desired fan speed. When AUTO, it becomes Low.
Only indoor fan operates.
Outdoor unit does not operate.
NOTE: Temperature cannot be set during FAN mode.

8-4. HEAT (☼) OPERATION

(1) Press STOP/OPERATE (OFF/ON) button.
OPERATION INDICATOR lamp of the indoor unit turns on with a beep tone.
(2) Select HEAT mode with OPERATION SELECT button.
(3) Press TEMPERATURE buttons TEMP ⊖ or ⊕ button to select the desired temperature. The setting range is 61 - 88°F (16 - 31°C).

1. Cold air prevention control

When the compressor is not operating or is starting, and the temperature of indoor heat exchanger and/or the room temperature is low or when defrosting is being done, the indoor fan will stop or rotate in Very Low speed.

2. High pressure protection

The compressor operational frequency is controlled by the temperature of the indoor heat exchanger to prevent the condensing pressure from increasing excessively.
When the temperature of indoor heat exchanger becomes too high, the high pressure protection works.
This mode continues until the temperature of indoor heat exchanger falls.

3. Defrosting

Defrosting starts when the temperature of outdoor heat exchanger becomes too low.
The compressor stops once, the indoor/outdoor fans stop, the 4-way valve reverses, and the compressor re-starts.
This mode continues until the temperature of outdoor heat exchanger rises or the fixed time passes.

8-5. AUTO CHANGE OVER ··· AUTO MODE OPERATION

Once desired temperature is set, unit operation is switched automatically between COOL and HEAT operation.

1. Mode selection

(1) Initial mode

At first indoor unit operates only indoor fan with outdoor unit OFF for 3 minutes to detect present room temperature. Following the conditions below, operation mode is selected.

① If the room temperature thermistor RT11 reads more than set temperature, COOL mode is selected.

② If the room temperature thermistor RT11 reads set temperature or less, HEAT mode is selected.

(2) Mode change

In case of the following conditions the operation mode is changed.

① COOL mode changes to HEAT mode when 15 minutes have passed with the room temperature 4 °F (2 degrees C) below the set temperature.

② HEAT mode changes to COOL mode when 15 minutes have passed with the room temperature 4 °F (2 degrees C) below the set temperature.

In the other cases than the above conditions, the present operation mode is continued.

NOTE 1: Mode selection is performed when multi standby (refer to **NOTE 2**) is released and the unit starts operation with ON-timer.

NOTE 2: If 2 or more indoor units are operating in multi system, there might be a case that the indoor unit, which is operating in AUTO (), cannot change over the other operating mode (COOL ↔ HEAT) and becomes a state of standby.

NOTE 3: At the beginning of AUTO mode, the air flow direction and the fan speed are set to AUTO and the air outlet selection is set to 2 FLOW.

8-6. AUTO VANE OPERATION

1. Horizontal vane (Horizontal vane/Multi-flow vane)

(1) Vane motor drive

These models are equipped with a stepping motors for the horizontal vanes. The rotating direction, speed, and angle of the motor are controlled by pulse signals (approximately 12 VDC) transmitted from indoor microprocessor.

(2) The horizontal vane angle and mode change as follows by pressing VANE CONTROL (VANE) button.

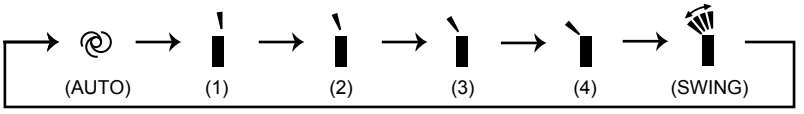

(3) Positioning

The vane presses the vane stopper once to confirm the standard position and then moves to the set angle. Confirming of standard position is performed in case of follows.

(a) The power supply turns on.
(b) The operation starts or finishes (including timer operation).
(c) The test run starts.
(d) The multi-standby starts or finishes.
(e) Every time the vane has swung more than the specified numbers of times.
(f) The horizontal vane automatically moves in certain intervals to determine its position, and then it returns to set position.
(g) The vane operates for the dew prevention.

(4) Air outlet selection

The air outlet(s) can be selected by pressing to VANE CONTROL (2FLOW/1FLOW) button.
When 2 FLOW is selected, air blows from the top and the front of the unit. When 1 FLOW is selected, air blows only from the top of the unit.

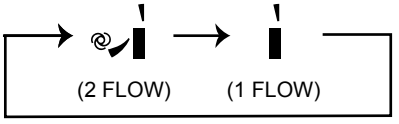

The multi-flow vane is automatically set to the appropriate position.
In HEAT, the multi-flow vane automatically changes its position according to the indoor fan speed.
Even if 2 FLOW is selected, air will blow only from the top of the unit in the following conditions:
• During COOL/DRY: The room temperature is close to set temperature.
  The air conditioner has operated for 0.5 to 1 hour.
• During HEAT: The air flow temperature is low. (During defrosting operation, start of operation, etc.)

NOTE:
Movement at the start of the 2 FLOW operation
• COOL/DRY, HEAT: It takes 0.5 to 1 minute to start the 2 FLOW operation.
• HEAT: When cold air blows out from the air outlet, the multi-flow vane may stop moving for up to 10 minutes to make and blow out warm air.

(5) VANE AUTO (@) mode
In VANE AUTO mode, the microprocessor automatically determines the horizontal vane angle to make the optimum room temperature distribution.

In COOL, DRY and FAN operation
2 FLOW: Vane angle is fixed to position 2.

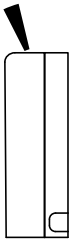

1 FLOW: Vane angle is fixed to position 1.

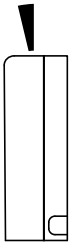

In HEAT operation
2 FLOW: Vane angle is fixed to position 2.

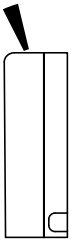

1 FLOW: Vane angle is fixed to position 3.

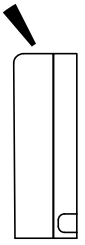

(6) STOP (operation OFF) and ON TIMER standby
In the following cases, the horizontal vane returns to the closed position.
(a) When STOP/OPERATE (OFF/ON) button is pressed (POWER OFF).
(b) When the operation is stopped by the emergency operation.
(c) When ON TIMER is ON standby.

(7) Dew prevention
During COOL or DRY operation with the vane angle at Angle 3 or 4 when the compressor cumulative operation time exceeds 1 hour, the vane angle automatically changes to Angle 1 for dew prevention.

(8) SWING (⁂) mode
By selecting SWING mode with VANE CONTROL button, the horizontal vanes swing vertically.
The remote controller displays " ⁂ ". SWING mode is cancelled when VANE CONTROL button is pressed once again.

(9) Cold air prevention in HEAT operation
The horizontal vane position is set to Upward.

(10) ECONO COOL (⁂) operation (ECONOmical operation)
When ECONO COOL button is pressed in COOL mode, set temperature is automatically set 4 °F (2°C) higher by the microprocessor. However, the temperature on the LCD screen on the remote controller is not changed. Also the horizontal vane swings in various cycle.
SWING operation makes you feel cooler than set temperature. So, even though the set temperature is higher, the air conditioner can keep comfort. As a result, energy can be saved.
To cancel this operation, select a different mode or press one of the following buttons in ECONO COOL operation: ECONO COOL, VANE CONTROL, POWERFUL button.

(11) POWERFUL (☞) operation

The air conditioner automatically adjusts the fan speed and the set temperature, and operates the POWERFUL mode.

The POWERFUL mode is cancelled automatically 15 minutes after operation starts, or when POWERFUL button is pressed once again within 15 minutes after operation starts. The operation mode returns to the mode prior to POWERFUL operation. To cancel this operation manually, select a different mode or press one of the following buttons within 15 minutes after operation starts: STOP/OPERATE (OFF/ON), ECONO COOL, FAN SPEED CONTROL, SLEEP or SMART SET button.

8-7. TIMER OPERATION

1. How to set the time

(1) Check that the current time is set correctly.

NOTE: Timer operation will not work without setting the current time. Initially “0:00” blinks at the current time display of TIME MONITOR, so set the current time correctly with CLOCK button.

How to set the current time

(a) Press the CLOCK button.

(b) Press the TIME SET buttons (∧ and ∨) to set the current time.

- Each time FORWARD button (∧) is pressed, the set time increases by 1 minute, and each time BACKWARD button (∨) is pressed, the set time decreases by 1 minute.
- Pressing those buttons longer, the set time increases/decreases by 10 minutes.

(c) Press the CLOCK set button.

(2) Press STOP/OPERATE (OFF/ON) button to start the air conditioner.

(3) Set the time of timer.

ON timer setting

(a) Press ON TIMER button(ON) during operation.

(b) Set the time of the timer using TIME SET buttons (∧ and ∨). ※

OFF timer setting

(a) Press OFF TIMER button (OFF) during operation.

(b) Set the time of the timer using TIME SET buttons (∧ and ∨). ※

※ Each time FORWARD button (∧) is pressed, the set time increases by 10 minutes: each time BACKWARD button (∨) is pressed, the set time decreases by 10 minutes.

2. To release the timer

To release ON timer, press ON TIMER button (ON).

To release OFF timer, press OFF TIMER button(OFF).

TIMER is cancelled and the display of set time disappears.

PROGRAM TIMER

- OFF timer and ON timer can be used in combination. The set time that is reached first will operate first.
- “ ⬅ ” and “ ➡ ” display shows the order of OFF timer and ON timer operation.

(Example 1) The current time is 8:00 PM.
The unit turns off at 11:00 PM, and on at 6:00 AM.

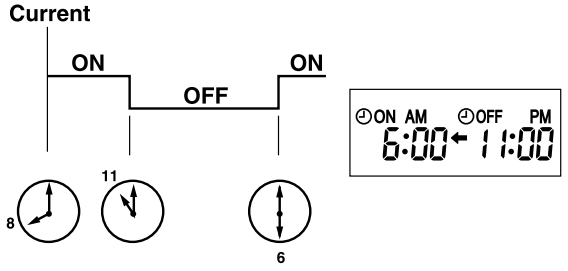

(Example 2) The current time is 11:00 AM.
The unit turns on at 5:00 PM, and off at 9:00 PM.

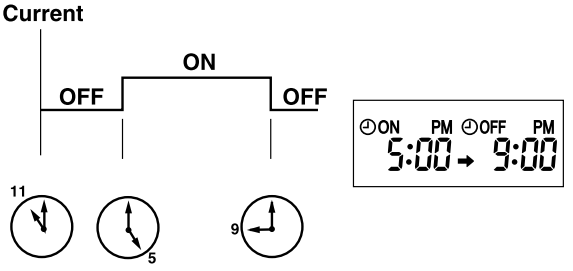

NOTE: If the main power is turned OFF or a power failure occurs while ON/OFF timer is active, the timer setting is cancelled. As these models are equipped with an auto restart function, the air conditioner starts operating with timer cancelled when power is restored.

8-8. WEEKLY TIMER OPERATION

• A maximum of 4 ON or OFF timers can be set for individual days of the week.
• A maximum of 28 ON or OFF timers can be set for a week.

E.g. : Runs at 75°F (24°C) from waking up to leaving home, and runs at 81°F (27°C) from getting home to going to bed on weekdays.
Runs at 81°F (27°C) from waking up late to going bed early on weekends.

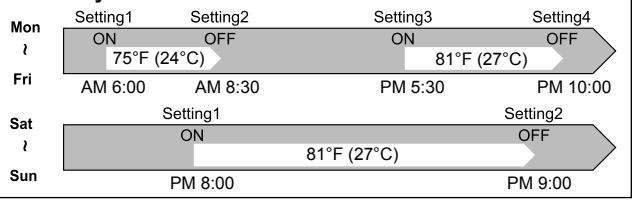

NOTE:
• The simple ON/OFF timer setting is available while the weekly timer is on. In this case, the ON/OFF timer has priority over the weekly timer, the weekly timer operation will start again after the simple ON/OFF timer is complete.
• When the weekly timer is set, temperature cannot be set to 50°F (10°C).
• The weekly timer operation and SMART SET operation cannot be used together.

1. How to set the weekly timer

* Make sure that the current time and day are set correctly.

(1) Press [EDIT/SEND SET] button to enter the weekly timer setting mode.

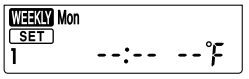

* [SET] blinks.

(2) Press [DAY] and [1~4] buttons to select setting day and number.

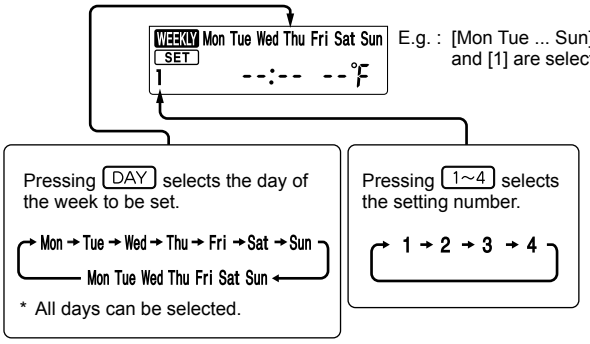

(3) Press [ON/OFF], [TIME], and [TEMP] buttons to set ON/OFF, time, and temperature.

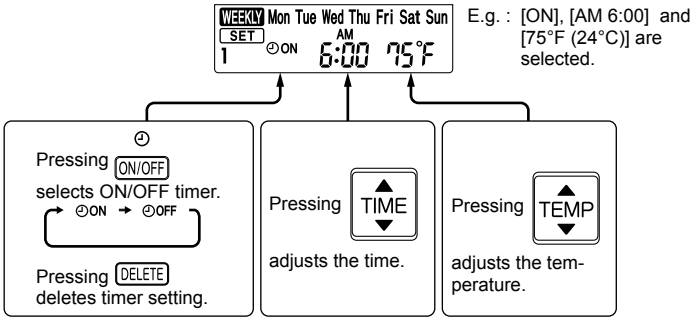

* Hold down the button to change the time quickly.
* The temperature can be set between 61°F and 88°F (16°C and 31°C) at weekly timer.

Press [DAY] and [1~4] buttons to continue setting the timer for other days and/or numbers.

(4) Press [EDIT/SEND SET] button to complete and transmit the weekly timer setting.

* [SET] which was blinking goes out, and the current time will be displayed.

NOTE:

- Press [EDIT/SEND SET] button to transmit the setting information of weekly timer to the indoor unit. Point the remote controller toward the indoor unit for 3 seconds.
- When setting the timer for more than one day of the week or one number, [EDIT/SEND SET] button does not have to be pressed per each setting. Press [EDIT/SEND SET] button once after all the settings are complete. All the weekly timer settings will be saved.
- Press [EDIT/SEND SET] button to enter the weekly timer setting mode, and press and hold [DELETE] button for 5 seconds to erase all weekly timer settings. Point the remote controller toward the indoor unit.

(5) Press [WEEKLY TIMER ON/OFF] button to turn the weekly timer ON. ([WEEKLY] lights.)

•When the weekly timer is ON, the day of the week whose timer setting is complete, will light.

Press [WEEKLY TIMER ON/OFF] button again to turn the weekly timer OFF. ([WEEKLY] goes out.)

NOTE:
The saved settings will not be cleared when the weekly timer is turned OFF.

2. Checking weekly timer setting

(1) Press [EDIT/SEND SET] button to enter the weekly timer setting mode.
*[SET] blinks.

(2) Press [DAY] or [1~4] buttons to view the setting of the particular day or number.

(3) Press [CANCEL] button to exit the weekly timer setting.

NOTE:
When all days of the week are selected to view the settings and a different setting is included among them, --:-- --°F will be displayed.

8-9. SLEEP ( ) OPERATION

1. How to set SLEEP operation

(1) Press STOP/OPERATE (OFF/ON) button.
(2) Select COOL, DRY, HEAT or FAN mode.
(3) Press SLEEP ([SLEEP]) button.
(4) PRESS TEMPERATURE buttons [[TEMP ⊕ △] (Increase) and [⊖ TEMP ▽] (Decrease)] to set the temperature of SLEEP operation.

Fan speed: AUTO
Horizontal vane: Position set on the remote controller
Operation indicator lamp: Dimly lit

- Once the above procedure is completed, the settings will be saved.
- After the settings are saved, a single push of SLEEP ([SLEEP]) button during operation activates SLEEP operation with the same settings every time.
- Temperature for SLEEP operation cannot be set during DRY or FAN mode.

Set temperature for SLEEP operation.

For about 30 minutes after SLEEP (SLEEP) button is pressed, the set temperature remains as set for the operation running when the SLEEP button is pressed. It will change to the set temperature for SLEEP operation in about 30 minutes.

Pressing SLEEP (SLEEP) button again returns the operation to the previous settings.

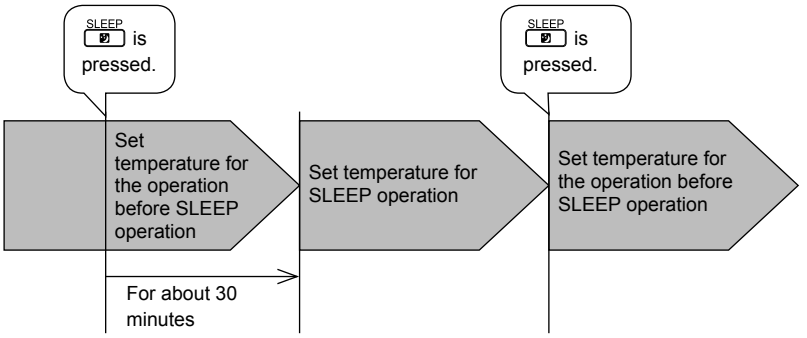

NOTE:
- ON/OFF timer is available during SLEEP operation.
- When a preset ON time for the weekly timer arrives during SLEEP operation, the weekly timer operation has priority. SLEEP operation will be cancelled, and the operation set on the weekly timer will start.

2. How to cancel operation
- Press SLEEP (SLEEP) button again.
- The operation returns to the previous settings.
- SLEEP operation is also cancelled when the FAN button is pressed or the operation mode is changed.

NOTE: SLEEP operation and SMART SET operation cannot be set at same time.

8-10. SMART SET ( ) OPERATION

1. How to set SMART SET operation

(1) Press STOP/OPERATE (OFF/ON) button.
(2) Select COOL, HEAT or ECONO COOL mode.
(3) Press SMART SET button.
(4) Set the temperature, fan speed, and airflow direction for SMART SET operation.

NOTE:
- SMART SET operation cannot be selected during DRY or AUTO mode operation.
- The setting range of HEAT mode SMART SET operation is 50°F (10°C) and 61 - 88°F (16 - 31°C).
- 2 groups of setting can be saved. (One for COOL/ECONO COOL, one for HEAT)
- SMART SET operation and the weekly timer operation cannot be used together.
- SMART SET operation and SLEEP operation cannot be set at the same time.

2. How to cancel operation
- Press SMART SET button again.
- SMART SET operation can also be cancelled by pressing OPERATION SELECT button to change the operation mode. The same setting is selected from the next time by simply pressing SMART SET button.

8-11. EMERGENCY/TEST OPERATION

In the case of test run operation or emergency operation, use EMERGENCY OPERATION switch on the right side of the indoor unit. Emergency operation is available when the remote controller is missing or has failed, or when the batteries in the remote controller are running down. The unit will start and OPERATION INDICATOR lamp will light up.

The first 30 minutes of operation is the test run operation. This operation is for servicing. The indoor fan runs at High speed and the temperature control does not work. In COOL/HEAT MODE, the air outlet selection is set to 2 FLOW during the test run operation. However, 2 FLOW operation in HEAT MODE is the same operation as the case that 2 FLOW operation is selection by the remote controler.

After 30 minutes of test run operation, the system shifts to EMERGENCY COOL/HEAT MODE with a set temperature of 75°F (24°C). The fan speed shifts to Medium.

In EMERGENCY COOL/HEAT MODE, the air outlet selection is set to 2 FLOW. 2 FLOW operation is the same operation as the case that 2 FLOW operation is selection by the remote controler.

The coil frost prevention works even in the test run or the emergency operation.

In the test run or emergency operation, the horizontal vane operates in VANE AUTO (@) mode.

Emergency operation continues until EMERGENCY OPERATION switch is pressed once or twice or the unit receives any signal from the remote controller. In the latter case, normal operation will start.

NOTE: Do not press EMERGENCY OPERATION switch during normal operation.

Operation mode	COOL/HEAT
Set temperature	75°F (24°C)
Fan speed	Medium
Horizontal vane	Auto
Air outlet	2 FLOW

The operation mode is indicated by the Operation Indicator lamp as following

Operation Indicator lamp

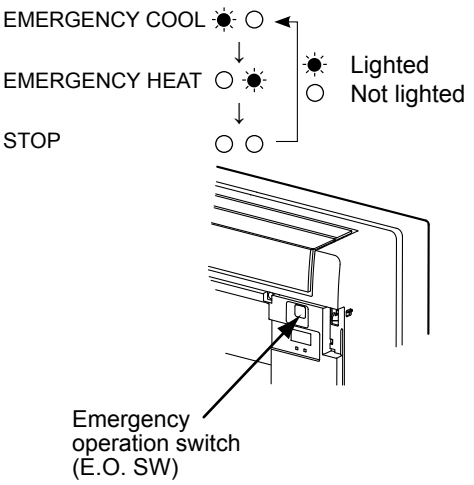

8-12. 3-MINUTE TIME DELAY OPERATION

When the system turns OFF, compressor will not restart for 3 minutes as 3-minute time delay function operates to protect compressor from overload.

8-13. Changing temperature indication (°F/°C)

- The preset unit is °F.
- °F → °C: Press RESET button while the TEMPERATURE buttons are pressed.
- °C → °F: Press RESET button while the TEMPERATURE buttons are pressed.

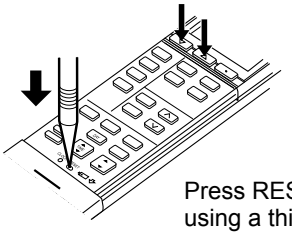

Press RESET button gently using a thin instrument.

9 TROUBLESHOOTING

MFZ-KJ09NA MFZ-KJ12NA MFZ-KJ15NA MFZ-KJ18NA

9-1. CAUTIONS ON TROUBLESHOOTING

1. Before troubleshooting, check the following

1) Check the power supply voltage.
2) Check the indoor/outdoor connecting wire for miswiring.

2. Take care of the following during servicing

1) Before servicing the air conditioner, be sure to turn OFF the main unit first with the remote controller, and then after confirming the horizontal vane is closed, turn OFF the breaker.
2) Be sure to turn OFF the power supply before removing the front panel, the cabinet, the top panel, and the P.C. board.
3) When removing the P.C. board, hold the edge of the board with care NOT to apply stress on the components.
4) When connecting or disconnecting the connectors, hold the connector housing. DO NOT pull the lead wires.

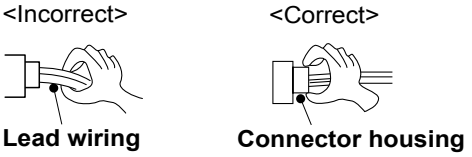

3. Troubleshooting procedure

1) Check if the OPERATION INDICATOR lamp on the indoor unit is flashing ON and OFF to indicate an abnormality. To make sure, check how many times the OPERATION INDICATOR lamp is flashing ON and OFF before starting service work.
2) Before servicing, check that the connector and terminal are connected properly.
3) When the electronic control P.C. board seems to be defective, check the copper foil pattern for disconnection and the components for bursting and discoloration.
4) When troubleshooting, Refer to 9-2, 9-3 and 9-4.

4. How to replace batteries

Weak batteries may cause the remote controller malfunction.
In this case, replace the batteries to operate the remote controller normally.

① Remove the front lid and insert batteries. Then reattach the front lid.

② Press RESET button with a thin instrument, and then use the remote controller.

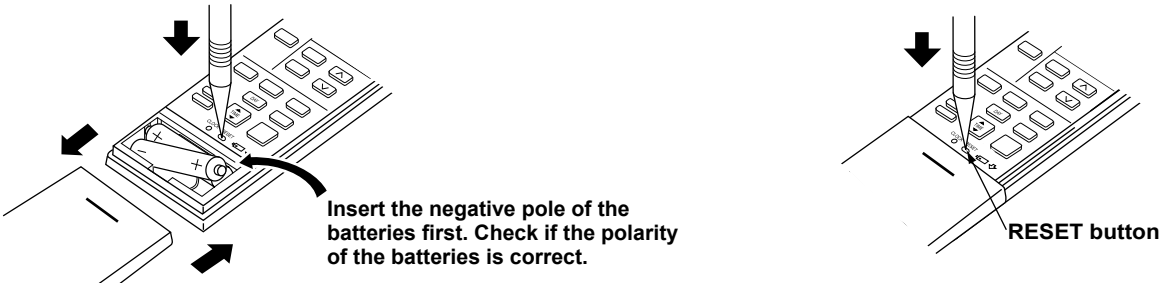

NOTE: 1. If RESET button is not pressed, the remote controller may not operate correctly.
2. This remote controller has a circuit to automatically reset the microcomputer when batteries are replaced. This function is equipped to prevent the microcomputer from malfunctioning due to the voltage drop caused by the battery replacement.
3. Do not use the leaking batteries.

5. Description of multi system air conditioner

OUTDOOR UNIT: MXZ series

The multi system outdoor unit can be connected to 2 or more indoor units.

- The units do not operate and the operation indicator lamp flashes as shown in the figure below when the total capacity of the indoor units exceed the capacity of the outdoor unit. Do not connect the indoor units beyond the outdoor unit capacity.
- When operating the 2 or more indoor units connected to a multi system outdoor unit, set all the indoor units to the same operation mode. If the COOL and the HEAT modes are selected for those indoor units, the indoor unit which has started operation first has a priority. The other indoor units set to the different operation mode later do not start operation and the operation indicator lamp flashes as shown in the figure below.

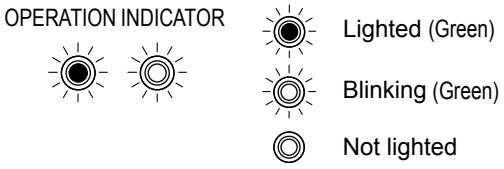

- When the indoor units start operation while the defrosting of the outdoor unit is being performed, it takes a few minutes (up to 10 minutes) to blow out warm air.
- In the heating operation, even though the indoor unit is not running, the room may get warm or the sound of refrigerant flowing may be heard. This is not a malfunction. They happen because the refrigerant is continuously flowing inside the unit.

9-2. FAILURE MODE RECALL FUNCTION

Outline of the function

This air conditioner can memorize the abnormal condition which has occurred once.

Even though OPERATION INDICATOR lamp indication listed on the troubleshooting check table (9-4.) disappears, the memorized failure details can be recalled.

This mode is very useful when the unit needs to be repaired for the abnormality which does not recur.

1. Flow chart of failure mode recall function for the indoor/outdoor unit

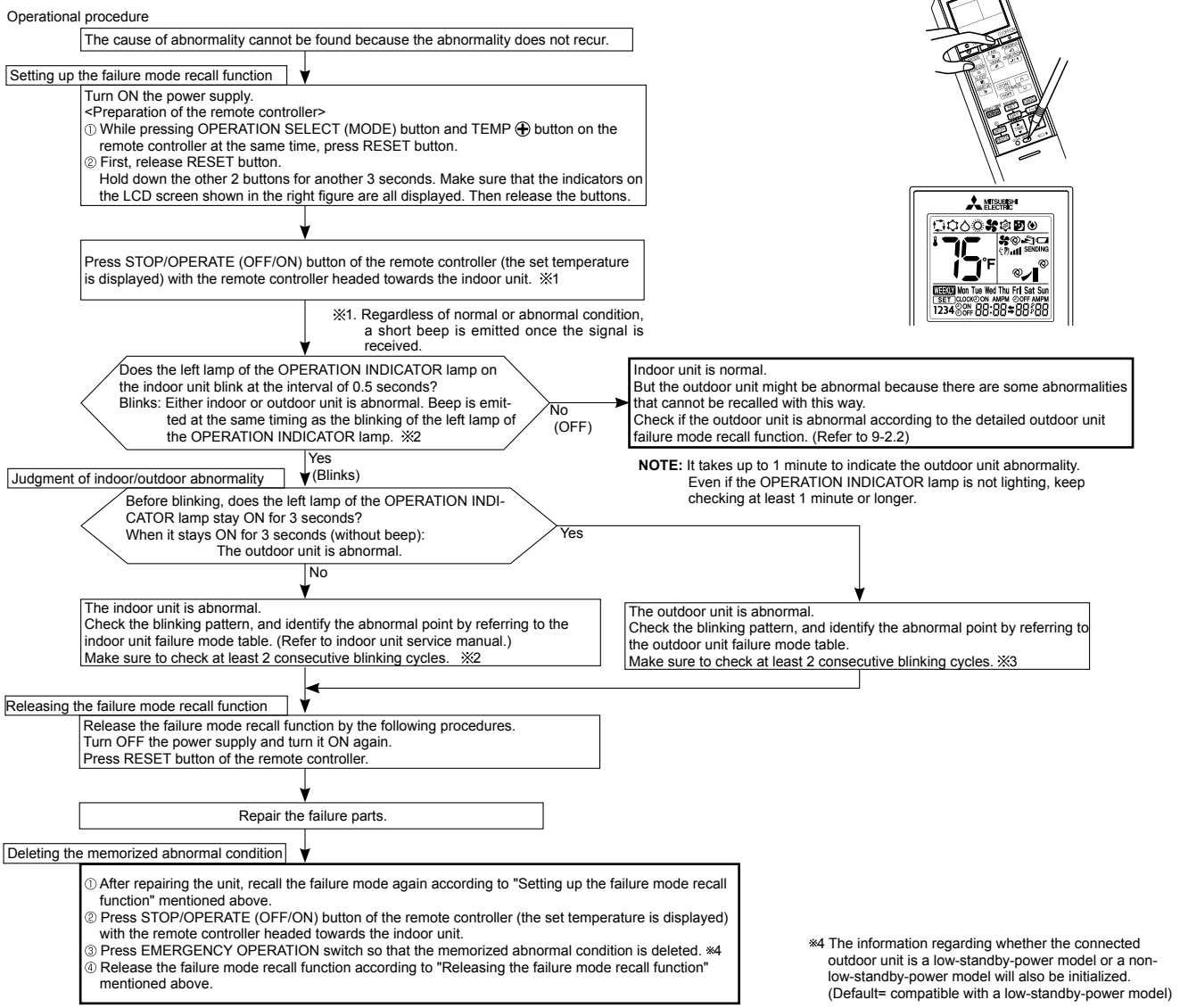

※2. Blinking pattern when the indoor unit is abnormal:

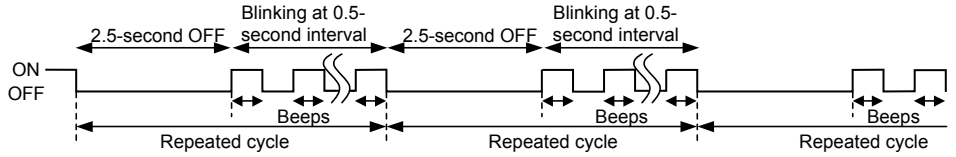

※3.Blinking pattern when the outdoor unit is abnormal:

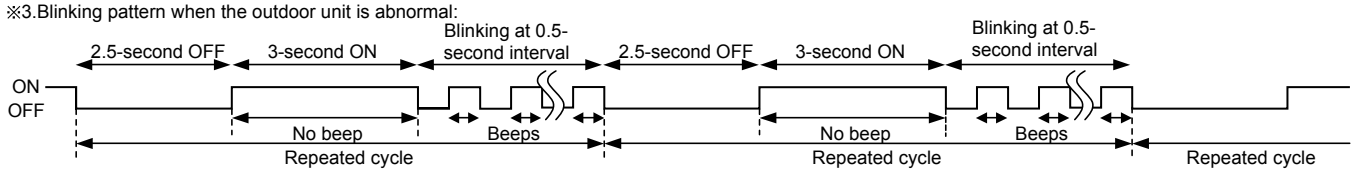

2. Indoor unit failure mode table

NOTE: Blinking patterns of this mode differs from the ones of Troubleshooting check table (9-4.).

Left lamp of OPERATION INDICATOR lamp	Right lamp of OPERATION INDICATOR lamp	Abnormal point (Failure mode)	Condition	Remedy
Not lighted	Not lighted	Normal	–	–
1-time flash every 0.5-second	Not lighted	Room temperature thermistor	The room temperature thermistor short or open circuit is detected every 8 seconds during operation.	Refer to the characteristics of the room temperature thermistor (9-7.).
2-time flash 2.5-second OFF	Not lighted	Indoor coil thermistor (Main 1, 2 and sub)	The indoor coil thermistor short or open circuit is detected every 8 seconds during operation.	Refer to the characteristic of the main indoor coil thermistors 1 and 2 and the sub indoor coil thermistor (9-7.).
3-time flash 2.5-second OFF	Not lighted	Serial signal error	The serial signal from the outdoor unit is not received for a maximum of 6 minutes.	Refer to 9-6.Ⓓ "How to check miswiring and serial signal error".
11-time flash 2.5-second OFF	Not lighted	Indoor fan motor	The rotational frequency feedback signal is not emitted during 12-second the indoor fan operation.	Refer to 9-6 Ⓐ "Check of indoor fan motor.
12-time flash 2.5-second OFF	Not lighted	Indoor control system	It cannot properly read data in the nonvolatile memory of the indoor electronic control P.C. board.	Replace the indoor electronic control P.C. board.
13-time flash 2.5-second OFF	Not lighted	Indoor coil thermistor (Main 3)	The indoor coil thermistor short or open circuit is detected every 8 seconds during operation.	Refer to the characteristic of the main indoor coil thermistor 3 (9-7.).

9-3. INSTRUCTION OF TROUBLESHOOTING

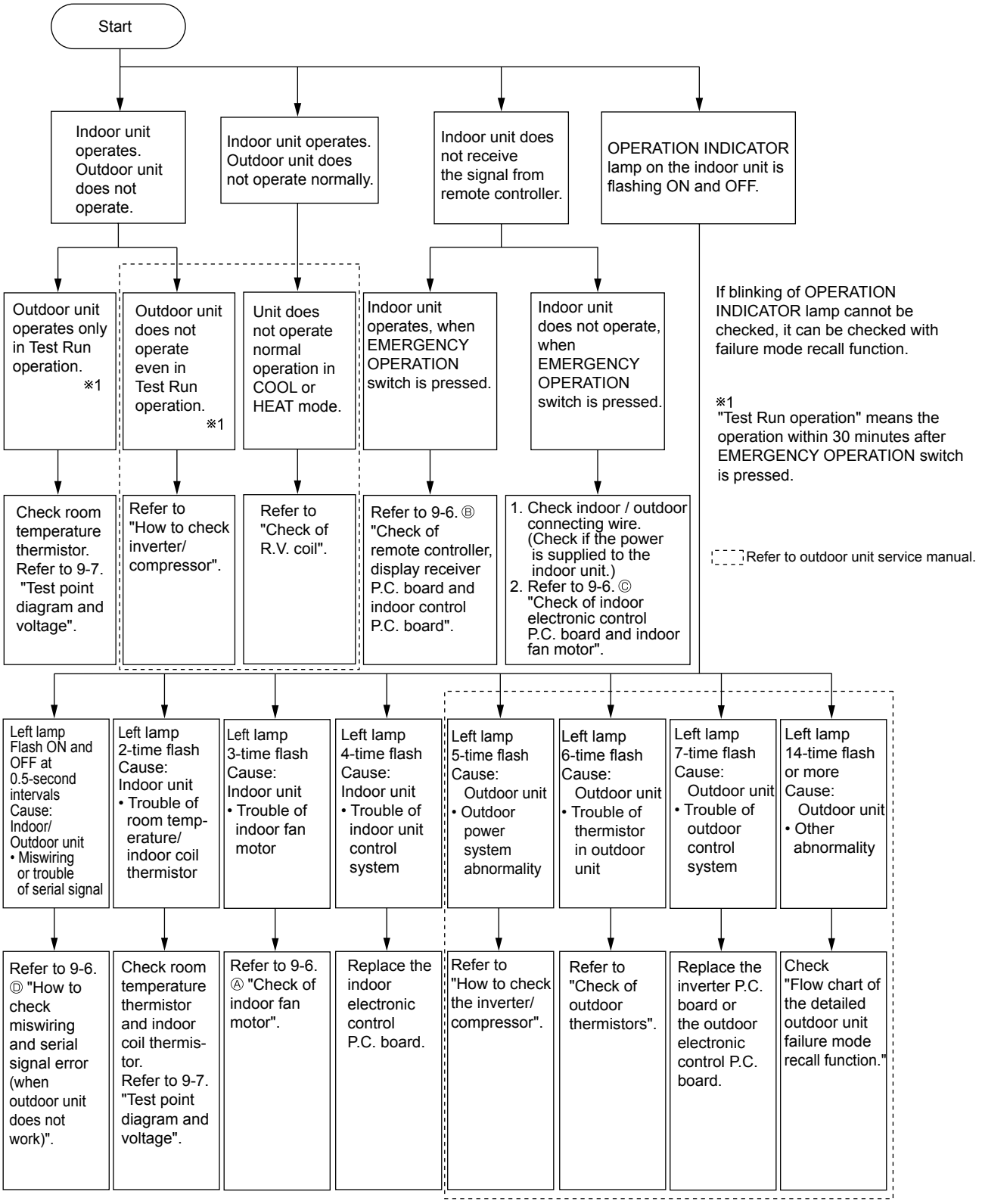

9-4. TROUBLESHOOTING CHECK TABLE

Before taking measures, make sure that the symptom reappears for accurate troubleshooting.
When the indoor unit has started operation and detected an abnormality of the following condition (the first detection after the power ON), the indoor fan motor turns OFF and OPERATION INDICATOR lamp flashes.

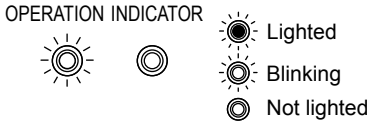

No.	Abnormal point	Operation indicator lamp	Symptom	Condition	Remedy
1	Miswiring or serial signal	Left lamp flashes. 0.5-second ON 0.5-second OFF	Indoor unit and outdoor unit do not operate.	The serial signal from the outdoor unit is not received for a maximum of 6 minutes.	• Refer to 9-6.Ⓓ"How to check miswiring and serial signal error".
2	Indoor coil thermistor Room tempera-ture thermistor	Left lamp flashes. 2-time flash 2.5-second OFF	Indoor unit and outdoor unit do not operate.	The indoor coil or the room temperature thermistor is short or open circuit.	• Refer to the characteristics of indoor coil thermistor, and the room temperature thermistor on 9-7.
3	Indoor fan motor	Left lamp flashes. 3-time flash 2.5-second OFF	Indoor unit and outdoor unit do not operate.	The rotational frequency feedback signal is not emitted during the indoor fan operation.	• Refer to 9-6.Ⓐ "Check of indoor fan motor".
4	Indoor control system	Left lamp flashes. 4-time flash 2.5-second OFF	Indoor unit and outdoor unit do not operate.	It cannot properly read data in the nonvolatile memory of the indoor electronic control P.C. board.	• Replace the indoor electronic control P.C. board.
5	Outdoor power system	Left lamp flashes. 5-time flash 2.5-second OFF	Indoor unit and outdoor unit do not operate.	It consecutively occurs 3 times that the compressor stops for overcurrent protection or start-up failure protection within 1 minute after start-up.	• Refer to "Check of inverter/ compressor". Refer to the outdoor unit service manual. Check the stop valve.
6	Outdoor thermistors	Left lamp flashes. 6-time flash 2.5-second OFF	Indoor unit and outdoor unit do not operate.	The outdoor thermistors short or open circuit during the compressor operation.	• Refer to "Check of outdoor thermistor". Refer to the outdoor unit service manual.
7	Outdoor control system	Left lamp flashes. 7-time flash 2.5-second OFF	Indoor unit and outdoor unit do not operate.	It cannot properly read data in the nonvolatile memory of the inverter P.C. board or the outdoor electronic control P.C. board.	• Replace the inverter P.C. board or the outdoor electronic control P.C. board. Refer to the outdoor unit service manual.
8	Other abnormality	Left lamp flashes. 14-time flash or more 2.5-second OFF	Indoor unit and outdoor unit do not operate.	An abnormality other than above mentioned is detected.	• Check the stop valve. • Check the 4-way valve. • Check the abnormality in detail using the failure mode recall function. Refer to the outdoor unit service manual.
9	Outdoor control system	Left lamp lights up	Outdoor unit does not operate.	It cannot properly read data in the nonvolatile memory of the inverter P.C. board or the outdoor electronic control P.C. board.	• Check the blinking pattern of the LED on the inverter P.C. board or the outdoor electronic control P.C. board.

OPERATION INDICATOR

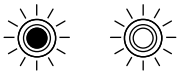

Lighted

Blinking

Not lighted

No.	Abnormal point	Operation indicator lamp	Symptom	Condition	Remedy
1	**MXZ type** Operation mode setting	**Right lamp flash** ● ○ ○ ○ ○ ○ ● ○ ○ ○ ○ ○ ● 2.5-second OFF	Outdoor unit operates but indoor unit does not operate.	When the operation mode of the each indoor unit is differently set to COOL (includes DRY) and HEAT at the same time, the operation mode of the indoor unit that has operated first has the priority.	• Select the same operation mode for all the units. Refer to the outdoor unit service manual.

9-5. TROUBLE JUDGEMENT CRITERIA OF MAIN PARTS

MFZ-KJ09NA MFZ-KJ12NA MFZ-KJ15NA MFZ-KJ18NA

Part name	Check method and criteria	Figure
Room temperature thermistor (RT11) Indoor coil thermistor (RT12 (MAIN 1), RT13 (SUB) RT14 (MAIN 2), RT15 (MAIN 3))	Measure the resistance with a tester. Refer to 9-7. "Test point diagram and voltage", "Indoor electronic control P.C. board", for the chart of thermistor.	
Indoor fan motor (MF)	Check 9-6. Ⓐ “Check of indoor fan motor” and Ⓒ “Check of indoor electronic control P.C. board and indoor fan motor”.	
Horizontal vane motor (MV1) FRONT	Measure the resistance between the terminals with a tester. (Part temperature: 50°F - 86°F (10°C - 30°C)) Color of the lead wire: BRN-other one (250 Ω) — Normal: 219 Ω - 273 Ω	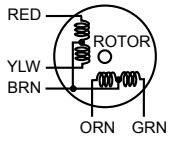
Horizontal vane motor (MV2) BACK	Measure the resistance between the terminals with a tester. (Part temperature: 50°F - 86°F (10°C - 30°C)) Color of the lead wire: BRN-other one (250 Ω) — Normal: 219 Ω - 273 Ω	
Multi-flow vane motor (MV3)	Measure the resistance between the terminals with a tester. (Part temperature: 50°F - 86°F (10°C - 30°C)) Color of the lead wire: BRN-other one (350 Ω) — Normal: 306 Ω - 382 Ω	

9-6. TROUBLESHOOTING FLOW

Ⓐ Check of indoor fan motor

The indoor fan motor error has occurred, and the indoor fan does not operate.

Turn OFF the power supply.

Is there any foreign matter that interferes the rotation of the line flow fan?

- Yes → Remove the foreign matter and adjust the line flow fan.
- No →

Pay enough attention to the high voltage on the fan motor connector.

Turn ON the power supply, wait 5 seconds or more, and then press EMERGENCY OPERATION switch.
Measure the supply voltage as follows within 12 seconds after EMERGENCY OPERATION switch is pressed.
If more than 12 seconds passes, turn OFF the power supply and turn it ON again, then measure the voltage. ※
<Indoor electronic control P.C. board>
1. Measure the voltage between CN211 ①(+) and ③(–).
2. Measure the voltage between CN211 ⑤(+) and ③(–).

※ If more than 12 seconds passes after EMERGENCY OPERATION switch is pressed, the voltage measured at 2. above goes 0 VDC although the indoor P.C. board is normal.

Is there 294/325 VDC between CN211 ① (+) and ③ (–) ?

- Yes → Does the voltage between CN211 ⑤ (+) and ③ (–) on the indoor electronic control P.C. board rise to the range of 2 to 6 VDC within 12 seconds after EMERGENCY OPERATION switch is pressed?
  - Yes → Replace the indoor fan motor.
  - No → Replace the indoor electronic control P.C. board.
- No → Replace the indoor electronic control P.C. board.

Indoor electronic control P.C. Board

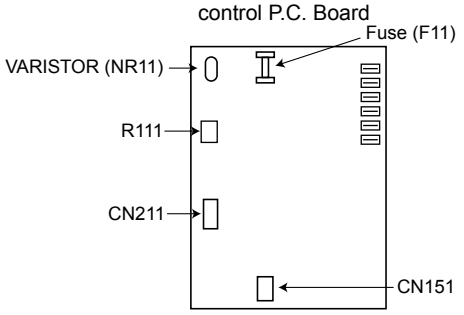

The indoor fan motor error has occurred, and the indoor fan repeats "12-second ON and 30-second OFF" 3 times, and then stops.

Measure the voltage between CN211 ⑥(+) and ③(–) while the fan motor is rotating.

Is it unchanged holding 0 or 15 VDC?

- Yes (Unchanged) → Replace the indoor fan motor.
- No (Changed) → Replace the indoor electronic control P.C. board.

Ⓑ Check of remote controller, display receiver P.C. board and indoor control P.C. board

※Check if the remote controller is exclusive for this air conditioner.

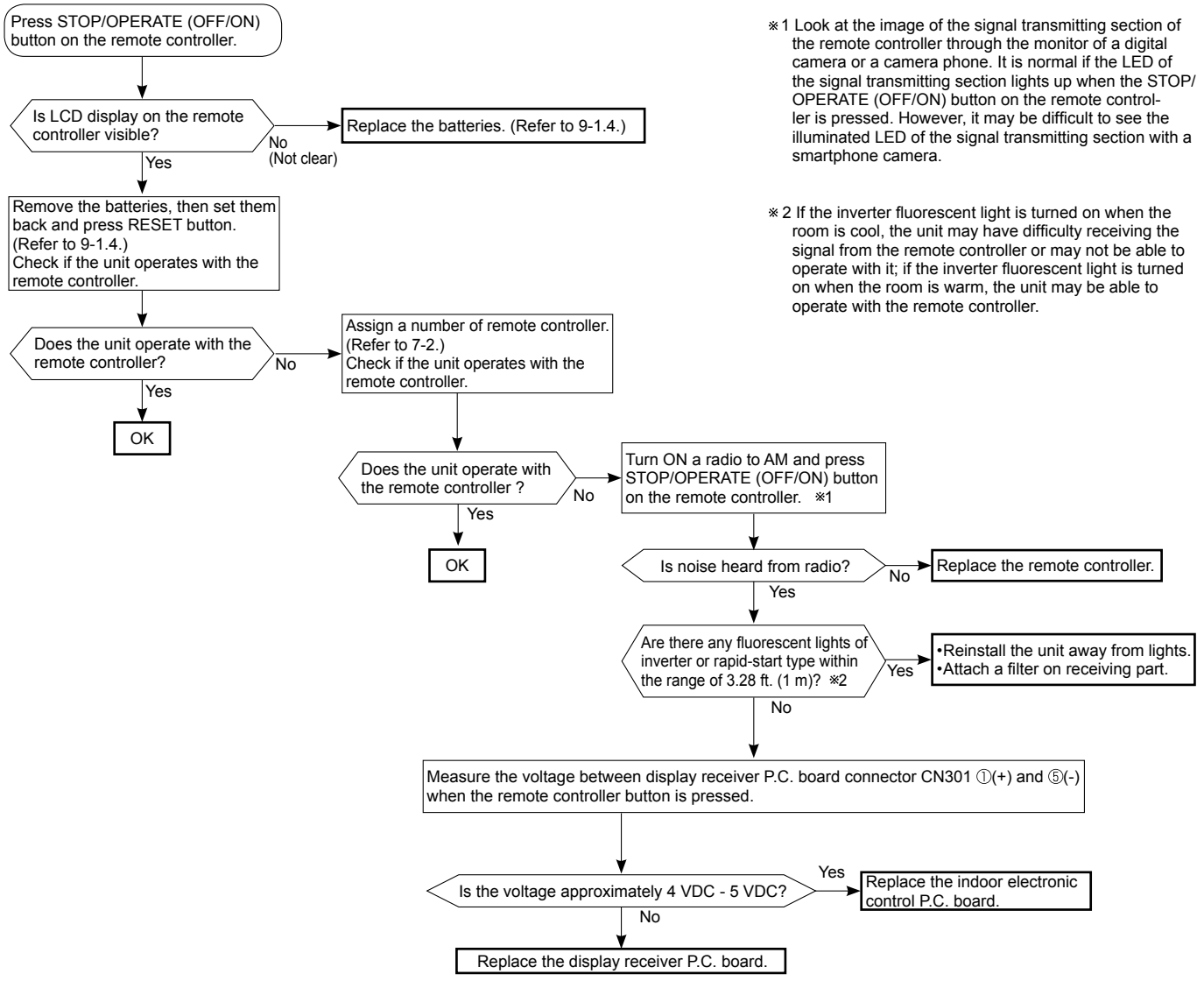

※1 Look at the image of the signal transmitting section of the remote controller through the monitor of a digital camera or a camera phone. It is normal if the LED of the signal transmitting section lights up when the STOP/OPERATE (OFF/ON) button on the remote controller is pressed. However, it may be difficult to see the illuminated LED of the signal transmitting section with a smartphone camera.

※2 If the inverter fluorescent light is turned on when the room is cool, the unit may have difficulty receiving the signal from the remote controller or may not be able to operate with it; if the inverter fluorescent light is turned on when the room is warm, the unit may be able to operate with the remote controller.

Ⓒ Check of indoor electronic control P.C. board and indoor fan motor

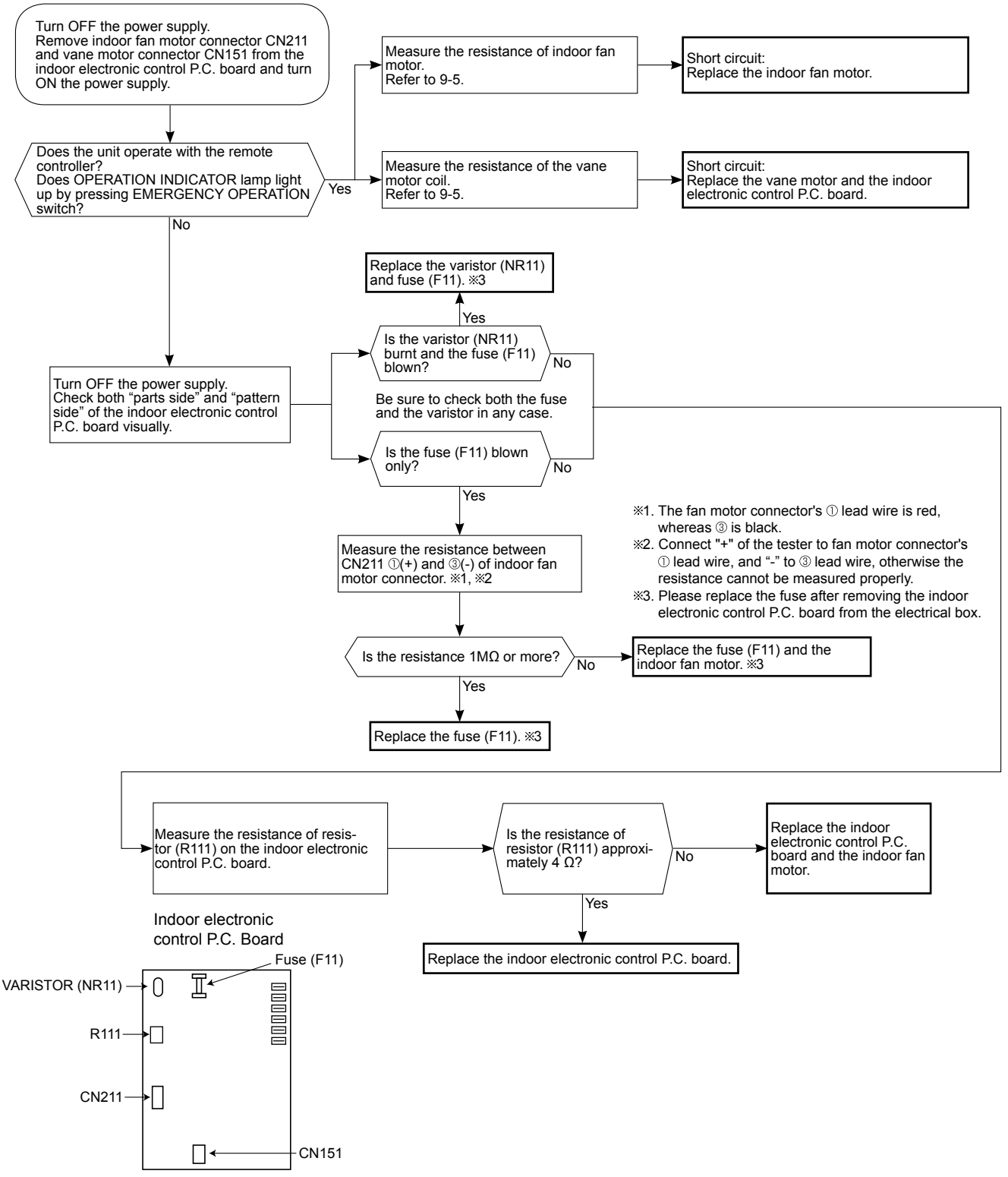

Ⓓ How to check miswiring and serial signal error

MUFZ Type

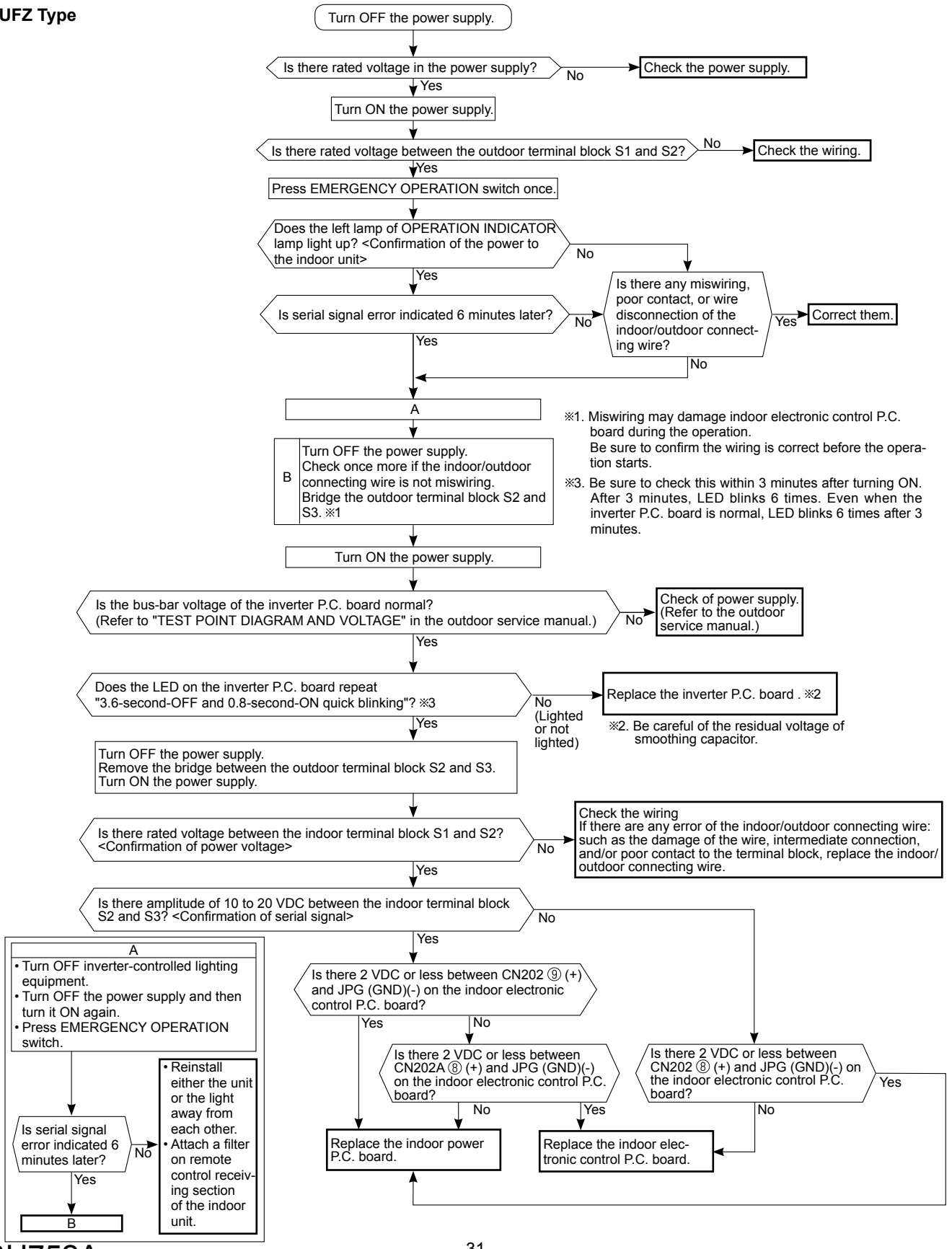

※1. Miswiring may damage indoor electronic control P.C. board during the operation.
Be sure to confirm the wiring is correct before the operation starts.

※3. Be sure to check this within 3 minutes after turning ON. After 3 minutes, LED blinks 6 times. Even when the inverter P.C. board is normal, LED blinks 6 times after 3 minutes.

※2. Be careful of the residual voltage of smoothing capacitor.

MXZ Type

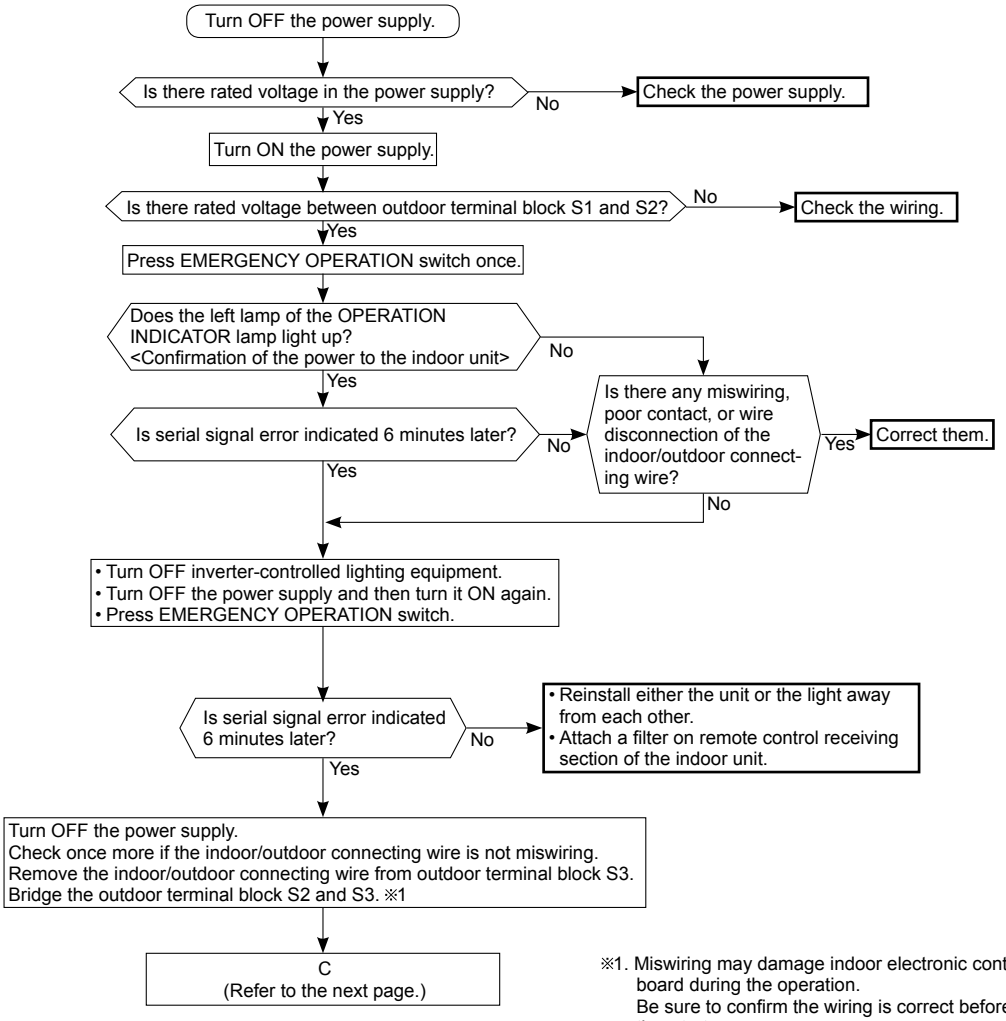

※1. Miswiring may damage indoor electronic control P.C. board during the operation.
Be sure to confirm the wiring is correct before the operation starts.

LED indication for communication status

Communication status is indicated by the LED.

Unit status
Blinking: normal communication
Lighting: abnormal communication or not connected

Pattern 1 and 2 is repeatedly displayed alternately. Each pattern is displayed for 15 seconds.

NOTE: "Lighting" in the table below does not indicate abnormal communication.

Outdoor control P.C. board

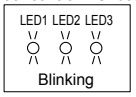

Pattern	LED 1	LED 2	LED 3
1	Unit A status	Unit B status	Lighted
2	Unit C status	Unit D status	Not lighted
3	Unit E status	———	Blinking

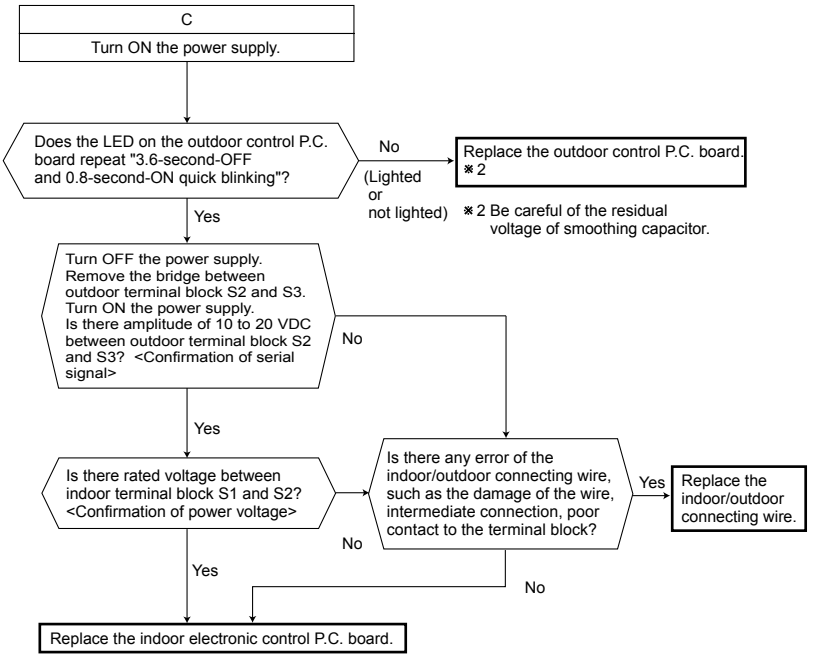

Ⓔ Electromagnetic noise enters into TV sets or radios

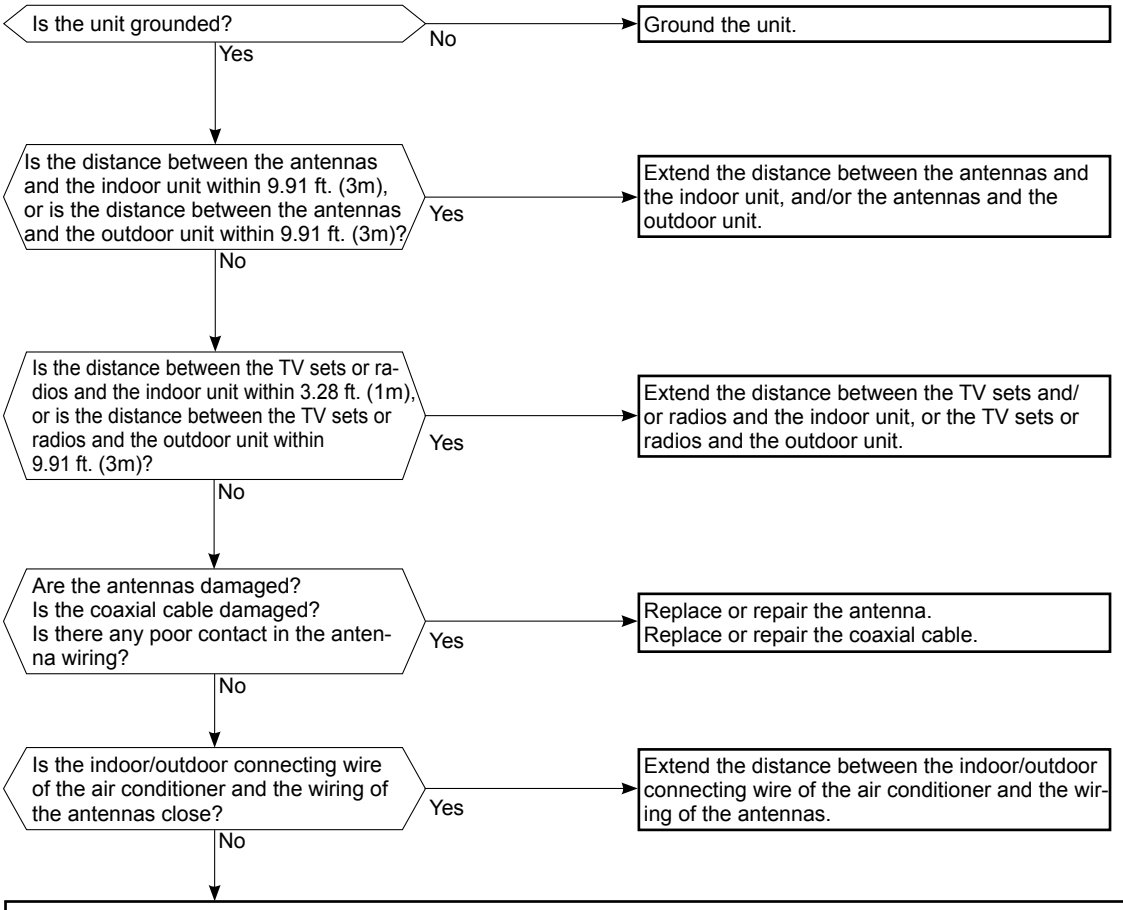

Even if all of the above conditions are fulfilled, the electromagnetic noise may enter, depending on the electric field strength or the installation condition (combination of specific conditions such as antennas or wiring).
Check the following before asking for service.

1. Devices affected by the electromagnetic noise
   TV sets, radios (FM/AM broadcast, shortwave)
2. Channel, frequency, broadcast station affected by the electromagnetic noise
3. Channel, frequency, broadcast station unaffected by the electromagnetic noise
4. Layout of:
   indoor/outdoor unit of the air conditioner, indoor/outdoor wiring, ground wire, antennas, wiring from antennas, receiver
5. Electric field intensity of the broadcast station affected by the electromagnetic noise
6. Presence or absence of amplifier such as booster
7. Operation condition of air conditioner when the electromagnetic noise enters in
   1) Turn OFF the power supply once, and then turn ON the power supply. In this situation, check for the electromagnetic noise.
   2) Within 3 minutes after turning ON the power supply, press STOP/OPERATE (OFF/ON) button on the remote controller for power ON, and check for the electromagnetic noise.
   3) After a short time (3 minutes later after turning ON), the outdoor unit starts running. During operation, check for the electromagnetic noise.
   4) Press STOP/OPERATE (OFF/ON) button on the remote controller for power OFF, when the outdoor unit stops but the indoor/outdoor communication still runs on. In this situation, check for the electromagnetic noise.

9-7. TEST POINT DIAGRAM AND VOLTAGE

MFZ-KJ09NA MFZ-KJ12NA MFZ-KJ15NA MFZ-KJ18NA

Indoor electronic control P.C. board

FUSE (F11) T3.15AL250V

Varistor (NR11)

Power supply (CN201) input 208/230 VAC

Resistor (R111)

Connector cable (CN24)

Serial signal input (CN202)

JR05 JR06) Modification point for individual operation (Refer to 7-2.)

To disable "Auto restart function", cut the Jumper wire to JR77. (Refer to 7-3.)

12 VDC

Connect to display receiver P.C. board (CN1J1)

Interface (CN105)

Indoor fan motor (CN211)
⑥ (+)0 or 15 VDC
⑤ (+)3-6 VDC
④ 15 VDC
③ (–) GND (high-voltage DC)
① 294/325 VDC

5 VDC

Timer short mode point (2 points) (Refer to 8-1.)

GND

Room temperature thermistor RT11 (CN111)

Indoor coil thermistor (CN112)
Indoor coil thermistor RT15 (MAIN 3) ⑦ ⑧
Indoor coil thermistor RT14 (MAIN 2) ⑤ ⑥
Indoor coil thermistor RT12 (MAIN 1) ③ ④
Indoor coil thermistor RT13 (SUB) ① ②

Vane motor (CN151)
Horizontal vane back ①-⑤
Horizontal vane front ⑥-⑩
Multi-flow vane ⑪-⑮

Display receiver P.C. board

Emergency operation switch (E. O. SW) (SW301)

Connect to indoor electronic control P.C. board (CN301)

Indoor coil thermistor [RT12,RT14,RT15 (MAIN), RT13 (SUB)]
Room temperature thermistor (RT11)

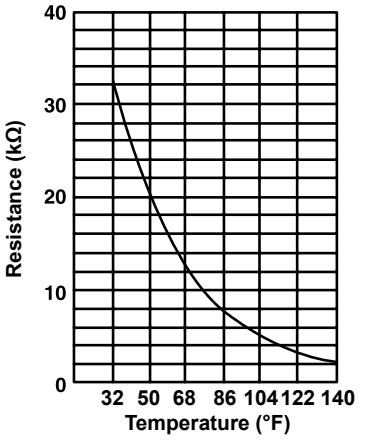

10 DISASSEMBLY INSTRUCTIONS

<"Terminal with locking mechanism" Detaching points>

The terminal which has the locking mechanism can be detached as shown below.
There are 2 types (refer to (1) and (2)) of the terminal with locking mechanism.
The terminal without locking mechanism can be detached by pulling it out.
Check the shape of the terminal before detaching.

(1) Slide the sleeve and check if there is a locking lever or not.

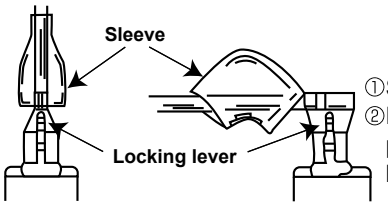

①Slide the sleeve.
②Pull the terminal while pushing the locking lever.

(2) The terminal with this connector has the locking mechanism.

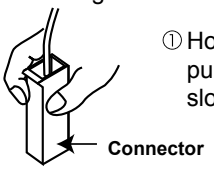

① Hold the sleeve, and pull out the terminal slowly.

10-1. MFZ-KJ09NA MFZ-KJ12NA MFZ-KJ15NA MFZ-KJ18NA

NOTE: Turn OFF the power supply before disassembly.

OPERATING PROCEDURE	PHOTOS
1. Removing the panel (1) Push down the tabs on the both sides of the unit. (2) Open the front panel toward you and pull it out upwards. (3) Remove the screws of the panel. (4) Open the horizontal vane (back) and push the ▼ marks on the top of the panel, and pull the panel toward you. (5) Lift up the panel and remove it from the unit.	**Photo 1** 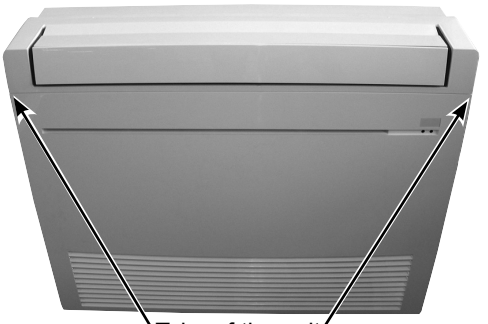 **Photo 2** 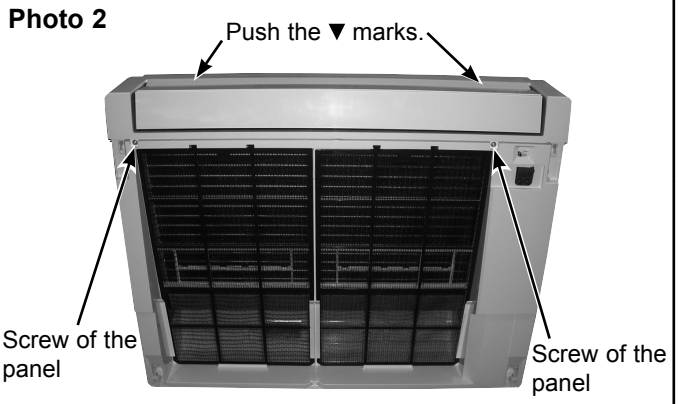
2. Removing the electrical box (1) Remove the panel. (Refer to 1.) (2) Remove the screw of the V.A. clamp cover and remove the V.A. clamp cover. (3) Remove the screw of the electrical cover and remove the electrical cover. (4) Remove the screw of the indoor/outdoor connecting wire, and then the indoor/outdoor connecting wire. (5) Remove the screws of the conduit box, and remove the conduit box. (6) Remove the earth wire connected to the indoor heat exchanger. (Photo 4) (7) Remove the screw of the electrical box. (Photo 5) (8) Disconnect the following connectors on the electronic control P.C. board. • Fan motor connector < CN211> (Photo 5) • Indoor coil thermistor connector < CN112> (Photo 5) (9) Rotate the display receiver P.C. board holder to the right side and disconnect the vane motor relay connector. (Photo 6) (10) Disengage the electrical box from the upper catch and pull out the electrical box from the box.	**Photo 3** 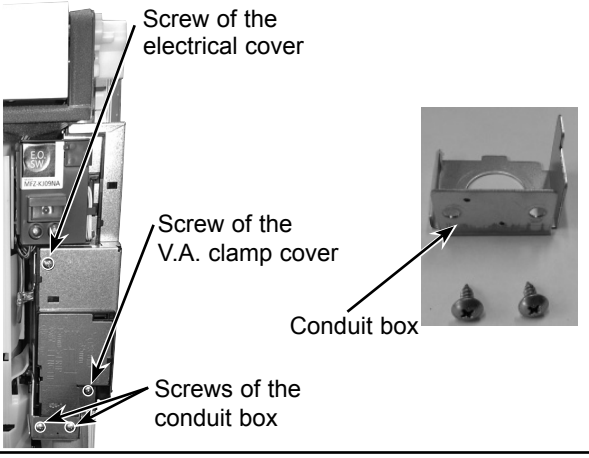

OPERATING PROCEDURE	PHOTOS

3. Removing the electronic control P.C. board and the display receiver P.C. board

(1) Remove the panel. (Refer to 1.)
(2) Remove the electrical box. (Refer to 2.)
(3) Remove the earth wire connected to the electronic control P.C. board.
(4) Disconnect all the connectors on the electronic control P.C. board.
(5) Pull out the electronic control P.C. board from the electrical box.
(6) Disengage the catches on the lead guide.
(7) Disengage the display receiver P.C. board holder from the catch on the electrical box.
(8) Open the display receiver P.C. board holder and pull out the display receiver P.C. board.

※ **Attaching the connectors**
Run the lead wires with the connectors as they were before the disassembly.

4. Removing the nozzle assembly

(1) Remove the panel. (Refer to 1.)
(2) Rotate the display receiver P.C. board holder to the right side and disconnect the vane motor relay connector.
(3) Remove the fixed screws on the both sides of the nozzle.
(4) Disengage the catches on the nozzle from the box.
(5) Hold the both sides of the nozzle. Rotate the nozzle toward you around the right and left ribs to remove it.

Photo 7

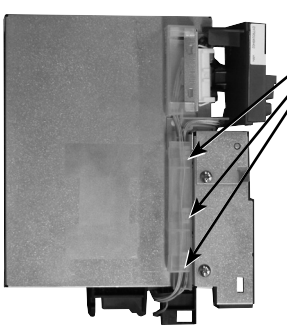

Photo 8

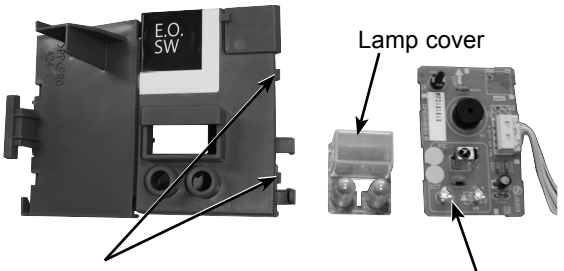

Photo 4

Photo 5

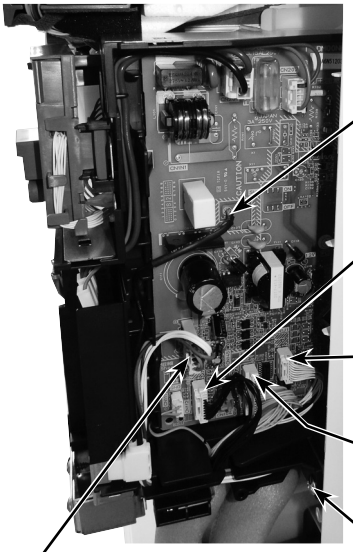

Photo 6

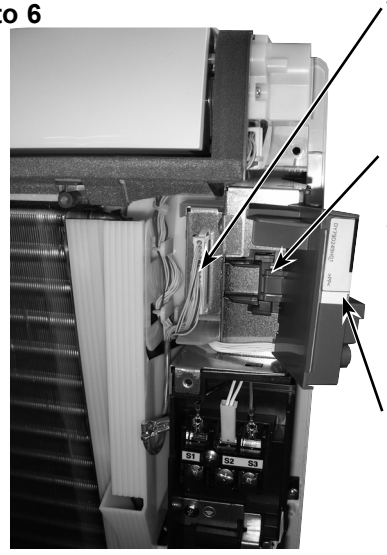

How to remove the multi-flow vane and the horizontal vanes

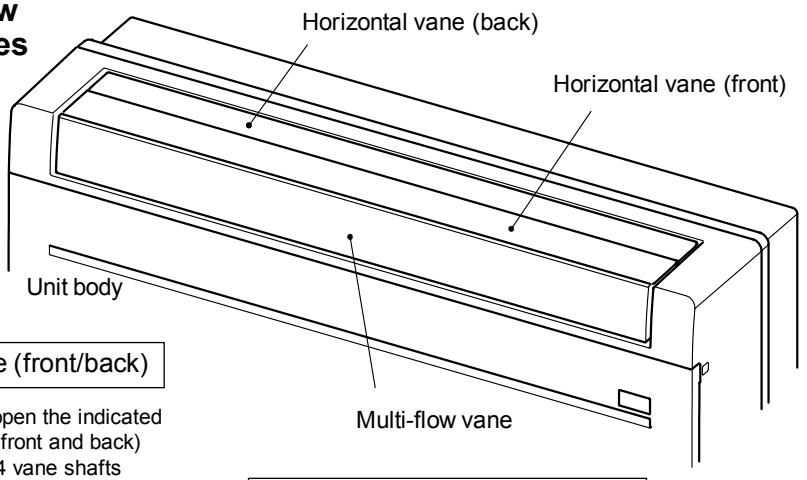

(1) Removing the horizontal vane (front/back)

(1)-1. See the figure below and push to open the indicated places on the horizontal vanes (between front and back) with your fingers so that you can access 4 vane shafts positioned on the back of the horizontal vanes.
(vane shafts on each horizontal vane)

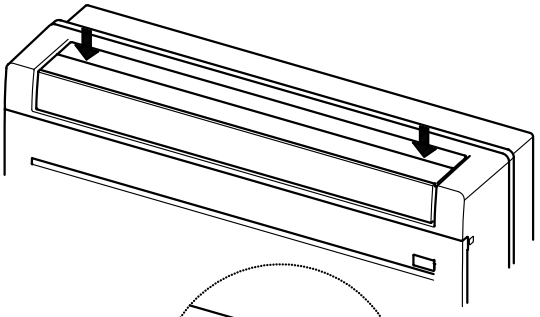

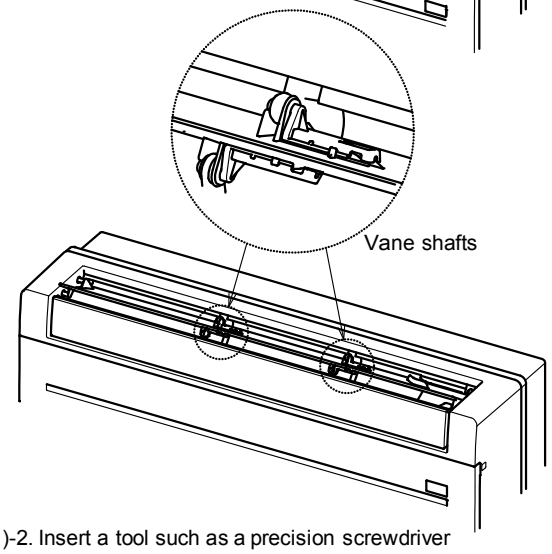

(1)-2. Insert a tool such as a precision screwdriver in the opening on the vane shaft and lift the catch of the vane shaft in arrow 1 direction to detach it from the rib on the horizontal vane. Slide the vane shaft in arrow 2 direction and separate it from the unit body.

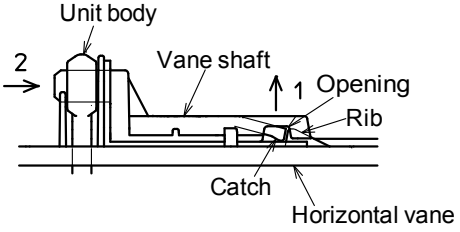

(1)-3. Remove the axial rods on the both ends of the horizontal vane from the unit body.

(2) Removing the multi-flow vane

(2)-1.Open the horizontal vanes (front and back) by following (1)-1. Make sure that 3 vane shafts are on the back of the multi-flow vane.

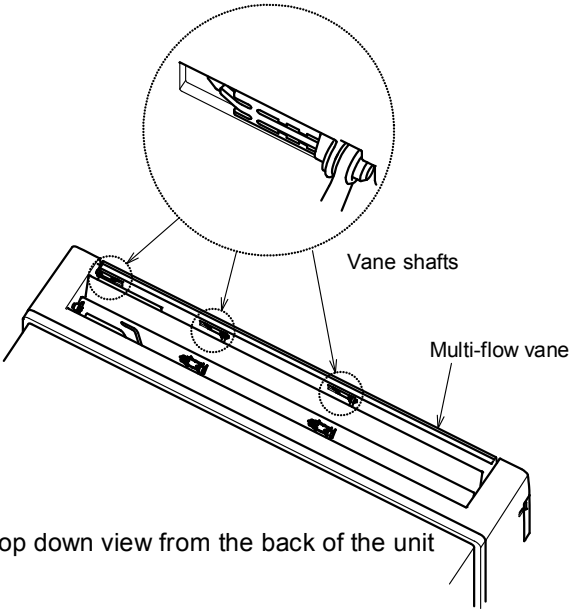

(2)-2. Insert a tool such as a precision screwdriver in the gap between multi-flow vane and the vane shaft and lift the catch of the vane shaft in the arrow 1 direction to detach it from the rib on the multi-flow vane. Slide the vane shaft in arrow 2 direction and separate it from the unit body.

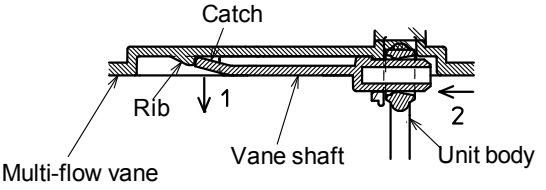

(2)-3. Remove the axial rod on the one end of the multi-flow vane from the unit body.

OPERATING PROCEDURE	PHOTOS

5. Removing the horizontal vane motor

(1) Remove the panel. (Refer to 1.)
(2) Remove the screws of the horizontal vane motor support and pull out the horizontal vane motor support from the nozzle.
(3) Remove the screws of the horizontal vane motors.
(4) Remove the horizontal vane motors from the horizontal vane motor support.
(5) Disconnect the connectors from the horizontal vane motor.

※ **Installing the horizontal vane motor**
Connect the connectors to the horizontal vane motors by referring to the colors, red and white, noted on the vane motor support.

6. Removing the multi-flow vane motor unit

(1) Remove the panel. (Refer to 1.)
(2) Disconnect the connector from the multi-flow vane motor unit.
(3) Remove the screws of the multi-flow vane motor unit and pull out the multi-flow vane motor unit from the nozzle.

Photo 9

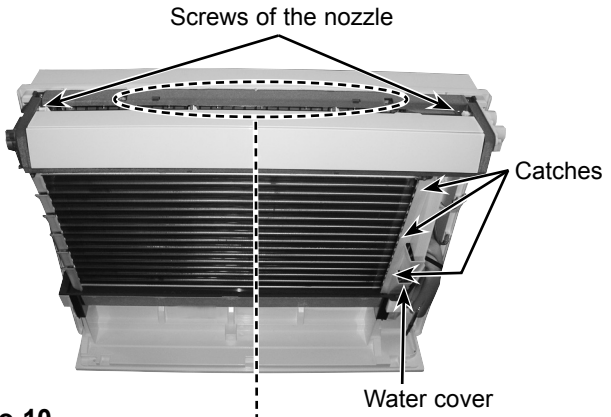

Photo 10

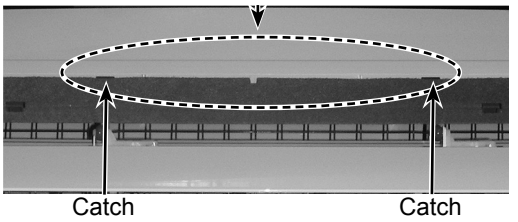

Photo 11

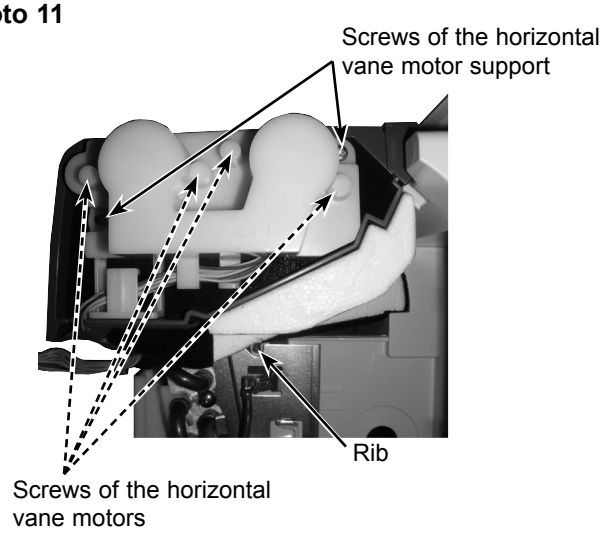

Photo 12

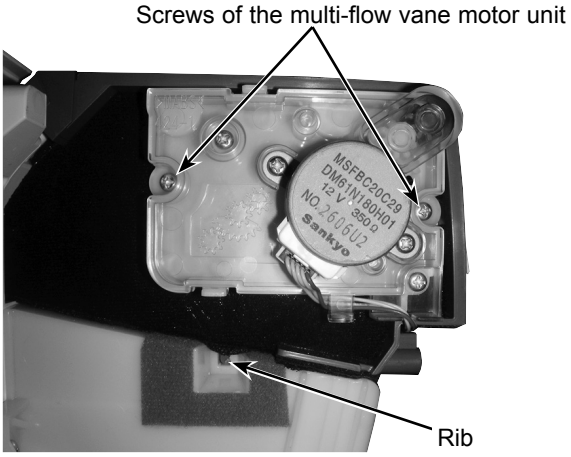

OPERATING PROCEDURE	PHOTOS

7. Removing the line flow fan and the indoor fan motor

(1) Remove the panel. (Refer to 1.)
(2) Remove the electrical box. (Refer to 2.)
(3) Remove the nozzle. (Refer to 4.)
(4) Disengage the water cover from the catches. (Photo 9)
(5) Remove the screws fixing the motor bed.
(6) Loosen the screw fixing the line flow fan.
(7) Remove the motor bed together with the indoor fan motor and the motor band.
(8) Disengage the catches on the motor band and remove the motor band, and pull out the indoor fan motor.
(9) Remove the screws fixing the both sides of the heat exchanger.
(10) Disengage the catch on the right side on the heat exchanger.
(11) Lift the heat exchanger, and pull out the line flow fan upward.

Photo 13

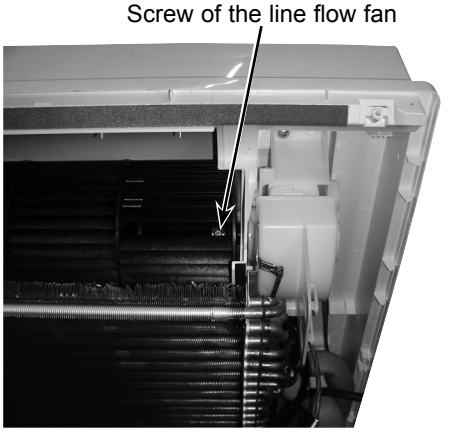

Photo 14

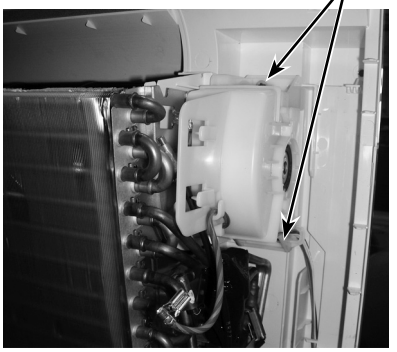

Photo 15

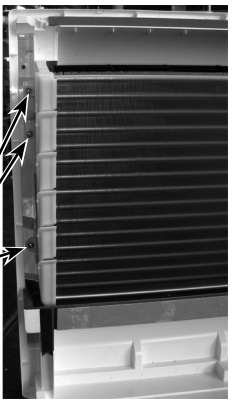

Photo 16

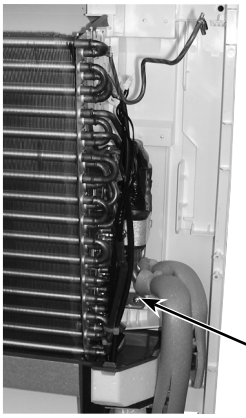

Photo 17

MITSUBISHI ELECTRIC CORPORATION

HEAD OFFICE: TOKYO BLDG., 2-7-3, MARUNOUCHI, CHIYODA-KU, TOKYO 100-8310, JAPAN

© Copyright 2016 MITSUBISHI ELECTRIC CORPORATION
Distributed in Mar. 2016. No. OBH752 REVISED EDITION-A
Distributed in Feb. 2016. No. OBH752
Made in Japan

New publication, effective Mar. 2016
Specifications are subject to change without notice.

SECTION 25 11 16

Smart Home Hub

ISY994 Series Gateways

Energy Management and Building Automation System

Main Features

- Autonomous & self contained – no connection to cloud services necessary
- Securely accessible from any mobile or desktop browser using TLS, with full support for x509 certificates.
- Certified OpenADR 2.0a & 2.0b VEN
- Meets applicable requirements of Dept. of Homeland Security: SCADA 1.8
- Available with ZigBee, Z-Wave, and INSTEON wireless protocols
- Uses off-the-shelf sensors and devices
- Extensible with software modules for weather, network resources, security interfaces, and more.
- Fully upgradeable without site visits
- Open and robust application programming interface (API)

Description

Available in a variety of low cost configurations, the ISY994 Series energy management and automation controller provide power and flexibility perfect for middle market, small, and medium business needs. Using open standards, the ISY994 provides building owners, contractors, and project leads the flexibility to automate a variety of every day tasks. Capable of communicating with a wide variety of off-the-shelf devices such as thermostats, lighting, IoT devices, and loads using ZigBee, Z-Wave, or Insteon, in addition to IP and direct contacts. The ISY994 series can read energy consumption from individual devices using Z-Wave, ZigBee, and AMI smart meters and report the data using OpenADR by simply dragging and dropping devices into the reporting group.

Unlike other solutions that use "the cloud" to process and store events, the ISY994 allows users to keep their information private by processing events, states, and triggers with the ISY and behind the firewall, and yet accessible from a variety of devices. Not relying solely on cloud services means your building is fully under your control during service outages, and shields you from the perils of stranded assets if cloud providers can no longer support customers in the future. For centralized administration of multiple gateways, an optional secure portal is available for utilities and commercial customers to deploy.

A certified OpenADR 2.0a / 2.0b VEN, the ISYs' demand response capabilities allows building owners to not only benefit from substantial energy saving opportunities, but for those in California, comply with the new Title 24 building regulations.

openADR 2.0a CERTIFIED

openADR 2.0b CERTIFIED

Z-WAVE

INSTEON

Ordering Information

ISY|994|i|Zw|IR|PRO

Module:
PRO – Professional Series
[blank] – Not Installed

Hardware Module:
IR – Infrared receiver installed
[blank] – Not Installed

Second Protocol:
Zw – Z-Wave Installed
Zs – ZigBee SEP Installed
Z – ZigBee PRO Installed
[blank] – Not Installed

First Protocol:
i – INSTEON capable
2Relay – High power relay installed

Series:
994 – 994 series hardware
DR – OEM OpenADR version [bare board for integration]

Universal Devices, Inc • 5353 Yarmouth Ave, #209 Encino, CA 91316 • www.universal-devices.com

ISY-994i Series Quick Setup Guide

1. ISY Installation

1. Connect one of the included Cat5e cable to ISY's **Network Port** and to your network hub. **Note**: the network must ***initially*** be DHCP enabled. If DHCP is not enabled, please configure ISY with a static IP address the instructions for which you will find *here*.

2. Connect the second included Cat5e cable to ISY's **Port A** and the other end to the PLM
   Note: If your PLM is model number **2413S**, you do need a power supply (included)

2. Host Computer Configuration

1. If you do not have Java installed, please install the latest for your platform. You may find the latest Java downloads at **http://www.java.com/getjava**. Please choose the latest JRE for your platform

2. If you would like to access your ISY without a browser, please go to **http://isy.universal-devices.com/994i/admin.jnlp**

3. [None Chrome Browsers Only] Start a Web Browser of your choice and go to **http://isy.universal-devices.com/994i** ;

4. When prompted to authenticate, enter **admin** for both user-id and password

5. On Universal Devices Administrative Console, choose **Help | About** (Figure 2)

6. On the About Dialog, locate **My URL** and write down the URL. For example, in Figure 2B, the URL is **http://192.168.0.128**. You may also access your ISY using this URL (as long as your router does not change the address for ISY)
   Note: If you have Windows XP, Vista, or Windows 7 and if you have UPnP (XP)/Device Discovery (Vista) enabled on your computer, you will see an **ISY** icon appear in My Network Places (XP) or Network (Vista/Windows 7). (Figure 2A)

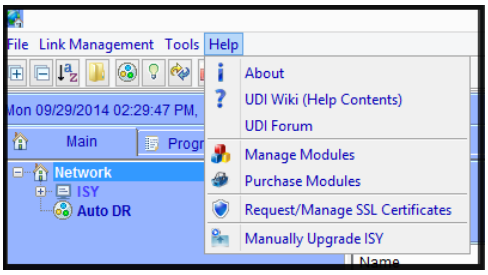

Figure 2

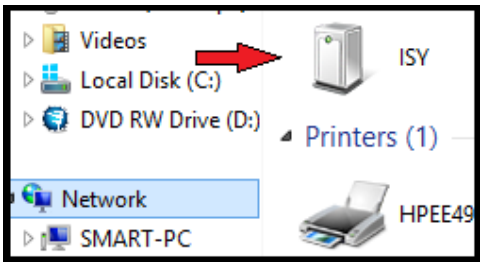

Figure 2A

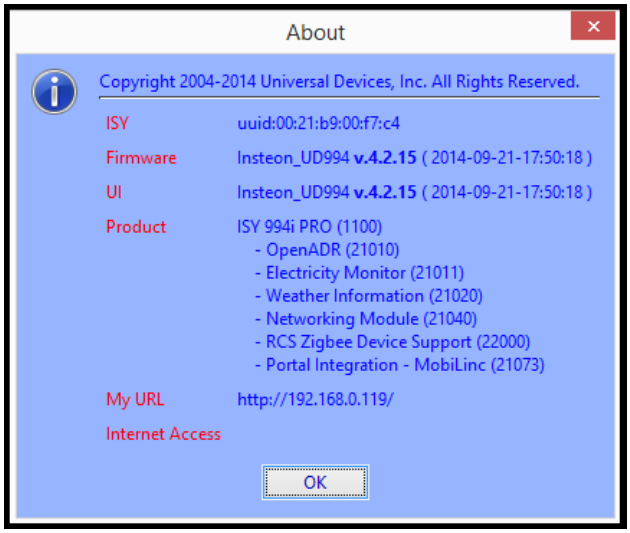

Figure 2B

3. Final Steps

Set Time and Location

Click on the **Configuration | System** tab and set the Time and the Physical Location for the unit (used for Sunrise/Sunset calculations). See Figure 3A.

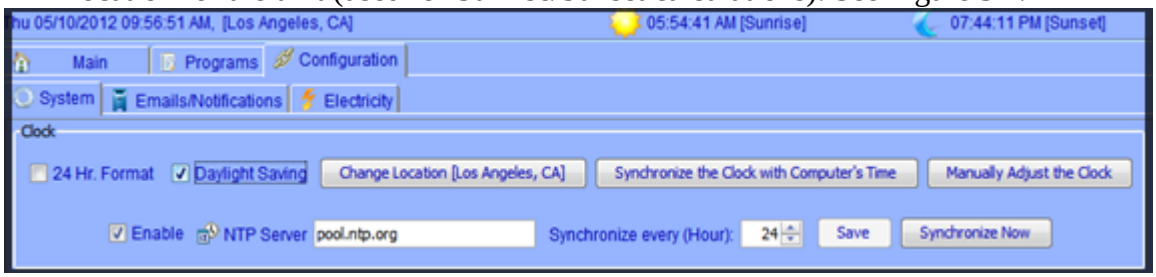

Figure 3A

Create a Program

Click on the **Programs | Details** tab and you will see a sample **Query All** program. Below that there is an option to "Add Program" Click on that. The example for this program will be to turn On the Porch Light at 7pm and off 4 hours later. See Figure 3B.

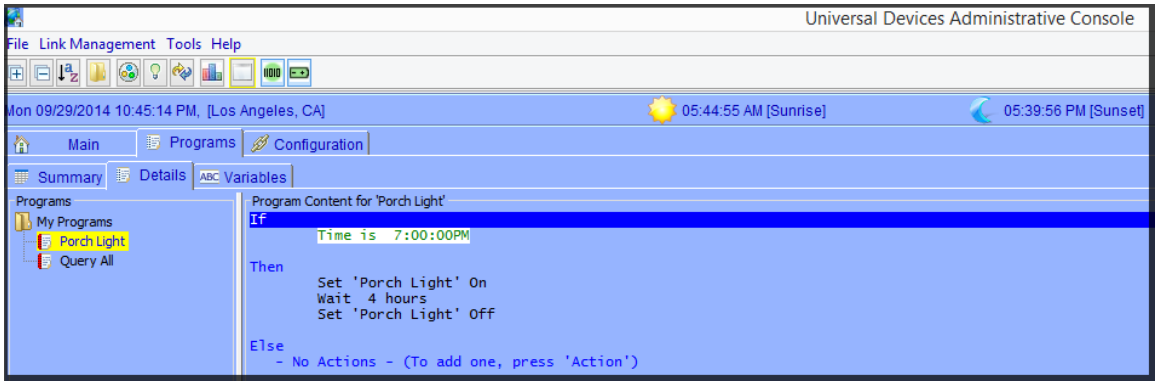

Figure 3B

Start Linking Your INSTEON Devices!

Click on the icon and ***then follow the instructions on the screen***. Continue linking as many devices as desired before clicking on the Finish button. See Figure 3C.

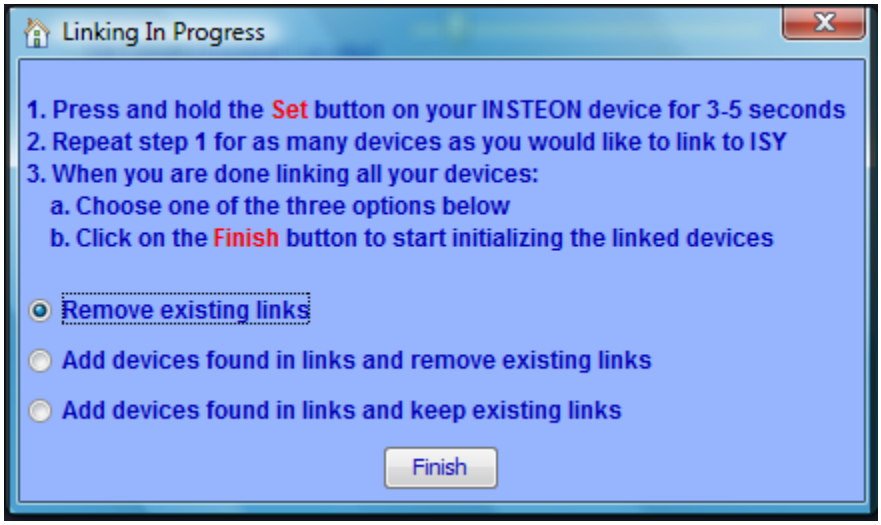

Figure 3C

For additional documentation, please visit http://wiki.universal-devices.com
For our Product and Technical Support Page please visit:
https://www.universal-devices.com/udi-support
Don't forget to register your unit to receive important enhancements, updates and upgrade information: http://www.universal-devices.com/register

ENJOY!

SECTION 25 35 13
Actuators

Öffnungsweite:
Opening width

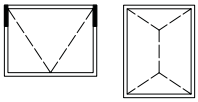

Y = 180 mm Y = 180 mm

Antrieb A22+ A 180

- Spannungsversorgung: DC 24 V
- Nennstrom: 1,3 A
- Zugkraft: 200 N
- Druckkraft: SK 70 N / PAF 120 N
- Einschaltdauer: 3 min. (ED / ON), 7 min. (AD / OFF)
- Schutzart: IP 44
- Umgebungstemperatur: -20 °C bis +50 °C
- Ausstellmechanik: Edelstahlkette, wartungsfrei

Drive A22+ A 180

- *Power supply: DC 24 V*
- *Nominal current: 1.3 A*
- Traction: *200 N*
- *Thrust: SK 70 N / PAF 120 N*
- *Power-on time: 3 min. (ED / ON), 7 min. (AD / OFF)*
- *Protection rating: IP 44*
- *Ambient temperature: -20 °C to +50 °C*
- *Opening mechanism: Stainless steel chain, maintenance-free*

Art.-Nr. *Art. No.*	
291 578	1

Öffnungsweite:
Opening width

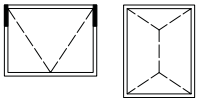

Y = 200 mm Y = 150 mm
Y = 300 mm Y = 180 mm
Y = 400 mm
Y = 500 mm

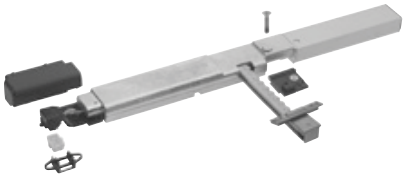

Antrieb A32++ A

- Spannungsversorgung: DC 24 V
- Nennstrom: 1,3 A
- Laufzeit: ~ 5 s / 100 mm Hub
- Einschaltdauer: 3 min. (ED / ON), 7 min. (AD / OFF)
- Schutzart: IP 44
- Umgebungstemperatur: -20 °C bis +50 °C
- Ausstellmechanik: Edelstahlkette, wartungsfrei

Drive A32++ A

- *Operating voltage: 24 V DC*
- *Nominal current: 1.3 A*
- *Run-time: ~ 5 s / 100 mm length of travel*
- *Power-on time: 3 min. (ED / ON), 7 min. (AD / OFF)*
- *Protection rating: IP 44*
- *Ambient temperature: -20 °C to +50 °C*
- *Opening mechanism: Stainless steel chain, maintenance-free*

Hub *Length of travel*	Zugkraft[1)] *Traction[1)]*	Druckkraft[1)] Thrust[1)]	Abmessungen *Dimensions*	Art.-Nr. *Art. No.*	
mm	N	N	mm		
200	300	200	425 x 22 x 38	**291 576**	1
300	300	200	475 x 22 x 38	**291 580**	1
300	300	200	525 x 22 x 38	**291 620**	1
400	300	150			
300	300	200	575 x 22 x 38	**291 622**	1
400	300	150			
500	300	110			

[1)] Für kurzzeitige Windlast entsprechend der Windstärke 6
[1)] For short-term wind loads corresponding to gale force 6

Konsolen inklusive. Einbauhinweise siehe K-Zeichnungen.
Includes brackets. For installation instructions, see K drawings.

SECTION 25 36 16

Smart Meter

ITRON MODULAR SMART METER

EM420i

A smart meter that paves the way for the smart grid

There is a lot of hype in the market today around the smart grid and the way it affects utilities. With extensive experience in smart meter deployment and long-standing collaboration with utilities, Itron introduces a new generation modular smart meter that will help utilities invest with confidence in smart metering infrastructure – the enabling technology for the smart grid.

A TRULY INTEROPERABLE, MODULAR AND SECURE SMART METER

Moving towards the smart grid obviously imposes major capital and operational investments for utilities. In a constant changing market, the speed of technological advances is a crucial challenge for utilities, given the scale of the investment needed. Utilities should ensure that both sustainable and profitable investments are in place to make their infrastructure fit with the future.

This means being able to forecast future technology developments, as well as investing in the required infrastructure capable of coping with technologies which are continuously evolving.

Understanding the end result of what the utility requires is essential to provide an effective and efficient smart metering solution. Itron uses a partnership approach to understand and analyze in detail the real market use cases of each individual utility and to provide a customized solution for them.

KEY BENEFITS

- **Future-proof platform adapted for smart grid evolution**
- **Smart Payment ready**
- **Advanced applications matching deregulated market requirements**
- **Improved operational efficiency**
- **End-consumer driven**

THE ENABLING TECHNOLOGY FOR THE SMART GRID

The Itron modular smart meter family employs a highly adaptable, platform for advanced metering infrastructure (AMI) designed to advance the transformation of the energy industry. This new generation of smart meters is designed to meet the significantly broader set of advanced metering, communication, control and smart grid requirements that many utilities are facing today and that will continue to develop in the years to come.

MODULAR

The new smart meters are designed with a modular architecture to seamlessly accommodate two field-swappable modules integrating various communication technologies (PLC, GPRS, Mesh RF, Zigbee, MBus wireless, etc...). This translates into easy adaptability for network interfaces: Wide/Metropolitan Area Network (WAN/MAN), Local/Field Area Network (LAN/FAN) and Home Area Network (HAN) as requirements and technologies evolve.

INTEROPERABLE

Based on open standards for smart metering and more broadly, for smart grids, the new modular smart meters reflect Itron's commitment to interoperability. They have been designed to seamlessly integrate with several international communication standards, ensuring true communication technology interoperability and increased options for utilities.

UPGRADEABLE

Another key capability of Itron's new modular smart meters is the remote upgradeability of application functionality and communication protocols, allowing the meter to be easily extensible and future-proof. A definitive split between metrology, rich smart metering applications and communication protocol firmware provides utilities with greater flexibility to face fast-evolving regulatory and communication requirements.

SECURE

Security is not an afterthought at Itron and we firmly believe that the best way to ensure a reliable smart grid is to take into account the variety of potential threats into the complete design process of our products. Like all Itron products and solutions, our new generation of smart meters have been developed following our **"Security by Design"** methodology.

Security by Design Methodology

HIGHLY ADAPTABLE PLATFORM FOR ADVANCED METERING INFRASTRUCTURE

System Architecture

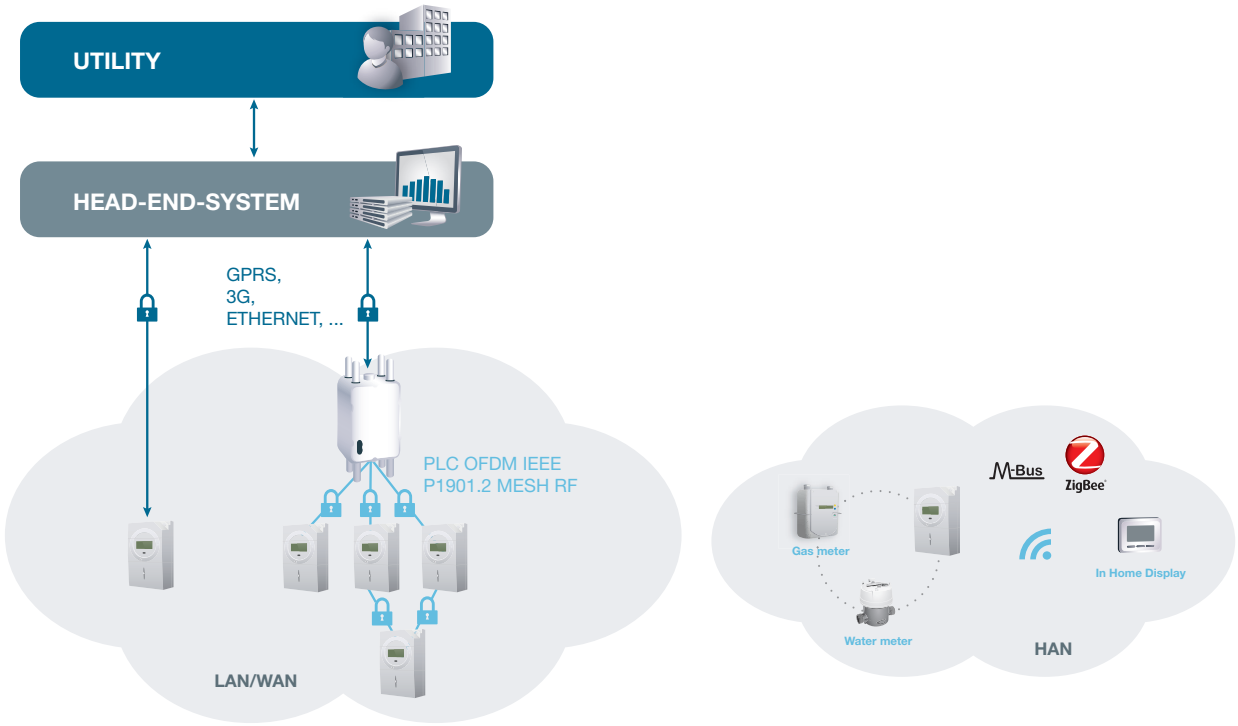

TAILOR-MADE SOLUTIONS

Designed for maximum flexibility, the new EM420i modular smart meters offer many functionalities that support emerging smart grid needs. They are designed to provide two-way communication with advanced information to the utility and end-consumer. They also allow to track energy usage to enable demand-response implementation that is critical to protecting the utility smart grid.

Multi-Energy Measurement

Full four quadrant measurement of active, reactive and apparent power including demand registers.

Network Quality Monitoring

Improved monitoring of the network based on power quality information:

- Instantaneous voltage, current and frequency data monitoring
- Voltage quality data monitoring (sag/ swell, average voltage, voltage loss).
- Instantaneous power quantity monitoring (active, reactive, apparent)

Event Log Book

Stores 7 categories of events for easy access remotely or locally.

Field Swappable Modules

- Up to two field swappable modules (FSM) that can be changed independently in the field without breaking any certification or metrology seals.
- Each module fits any meter platform (single or three phase) and can be changed without powering down the meter.
- No interruption to the end-consumer
- Field swappable modules are secured with their own sealable cover.

Fraud Detection

Main cover, terminal cover and communication module cover detection is included along with registration of magnetic anomalies.

Time-of-Use Calendar

Highly customisable calendar managing up to 2 calendars (active & latent) to address residential and low end commercial configurations.

Load Profile

- Up to 3 independent energy load profiles individually configured to address all meter logging requirements.
- Additionally the meter can store load profile data for up to 4 M-Bus multi-utility devices. Each device has its own load profile configuration.

Load Management

- Remote and local control on main contactor and additional smart switches (Smart Plugs, Appliance Control Devices…)
- Connection to HAN wireless communication module and 5A relays
- Load controlled by meter through definition of power limiting thresholds and internal calendar for scheduled disconnections and reconnections
- Remote dynamic control on group of loads and emergency load shedding operation possible.

Prepayment

- Compatible with the STS standardization for prepayment tokens
- Interoperability with any STS compatible prepayment vending system
- Real two way real-time prepayment operation with token transfer processed directly from the vending system to the meter through the AMI communication channel

Technical Specifications

Itron Modular Smart Meters

Metrology	Single Phase	Three Phase
Network Connection	1-Phase 2-Wire, DIN 43857 (asymmetric connection) 1-Phase 2-Wire, BS 5685 (symmetric connection)	3-Phase 4-Wire, DIN 43857 (asymmetric Connection)
Accuracy	Active Class 1(IEC 62053-21) Reactive Class 2 IEC 62053-23 Class B (MID EN 50470-3)	
Voltage Operating Range	-20% to +15% Un (220 230 240 V)	-20% to +15% Un (3 x 220(380)V, 3 x 230(400)v, 3 x 240(415)V 3 wire)
Current Range	5(100)A, Ibase: 5A, Imax: 100A (Integrated Contactor)	
Frequency	50 / 60Hz +/- 5%	

Environment	Single Phase	Three Phase
Temperature Range	Operating range: -40°C to +70°C Storage and transport: -40°C to +85°C	
Impulse Voltage Immunity	0.5J +/- 0.05J @ 6kV ((EN50470-1) & 9J @ 12kV (SP1618)	
IP Protection Class	IP 54 (EN 60529)	
Magnetic Field Immunity	Standards: AC field 0.5mT according to IEC62053 - 21 (400AT coil), AAC field according to VDEW 2.0 (1000AT) DC magnetic field: 1.2T magnet applied to all meter faces except the rear of the meter.	

Mechanical	Single Phase	Three Phase
Terminals (Direct Connect)	8.2mm (up to 35mm^2 for multi-strand cables)	
Dimensions	DIN Meter - Width: 130mm Depth: 92mm Height (with terminal cover): 232mm	DIN Meter - Width: 177mm Depth: 97mm Height (with terminal cover): 330mm

Inputs/Outputs	Single Phase	Three Phase
Optical Communications	According to DLMS/COSEM (IEC 62056-21)	
Load Management Relays (Optional)	Up to two 5A (250V) relays	
M-Bus Wired (Optional)	Multi-utility devices to manage up to 16UL (according to M-bus standard EN13757-2)	

Single Phase

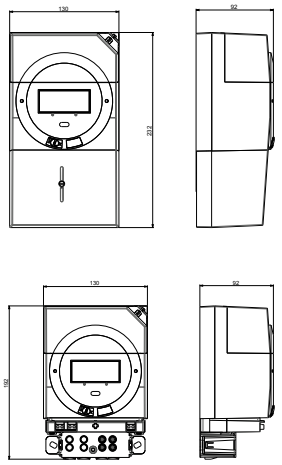

Three Phase

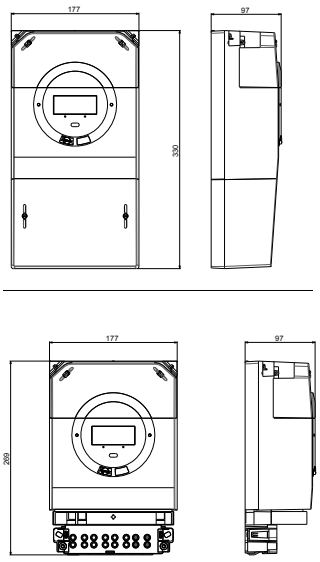

Itron Field Swappable Modules

FSM1: Wide Area & Local Area Networks

Communication Type	Description
GPRS	Quad band modem, UDP, TCP/IP protocol, IPv4 IP protocol stack
PLC OFDM	IEEE P1901.2, IPv6

FSM2: Home Area Networks

Communication Type	Description
Zigbee	Smart Energy Profile V1.1 In Home Display

Itron is the leading provider of energy and water resource management solutions for nearly 8,000 utilities around the world. We offer end-to-end solutions that include electricity, gas, water and heat measurement and control technology; communications systems; software; and professional services. With nearly 10,000 employees doing business in more than 130 countries, Itron empowers utilities to responsibly and efficiently manage energy and water.

To realize your smarter energy and water future, start here: **www.itron.com**

ITRON

1 Avenue des Temps Modernes
86361 Chasseneuil du Poitou
France

Phone: +33(0)5 4962 7000

Fax: +33(0)5 4962 7089

While Itron strives to make the content of its marketing materials as timely and accurate as possible, Itron makes no claims, promises, or guarantees about the accuracy, completeness, or adequacy of, and expressly disclaims liability for errors and omissions in, such materials. No warranty of any kind, implied, expressed, or statutory, including but not limited to the warranties of non-infringement of third party rights, title, merchantability, and fitness for a particular purpose, is given with respect to the content of these marketing materials.
© Copyright 2014, Itron. All rights reserved. EL-106.2-EN-02/14

SECTION 26 05 19

Electric Wiring

IDEAL®	**MODELS 32, 33, 34**	***IN-SURE™*** **PUSH-IN CONNECTORS**

FEATURES/BENEFITS:

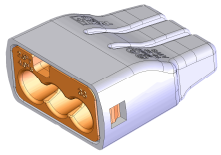

-COMPACT SIZE FITS THROUGH 1/2" KO ALLOWS MORE WIRING OPTIONS
-LOW INSERTION FORCE MAY REDUCE RISK OF REPETITIVE TRAUMA INJURY
-WIDER WIRE RANGE FOR EASY INSTALLATION AT OEM AND IN FIELD
-TRANSPARENT SHELL ENABLES EASY VERIFICATION OF CONNECTION
-GROUND RATING ELIMINATES NEED FOR SPECIAL "GROUND" CONNECTOR

ELECTRICAL:

VOLTAGE	
GENERAL:	600 V MAX
SIGNS/LUMINAIRES:	1000 V MAX

MECHANICAL:

18 AWG INSERTION FORCE:	3 LB (13 N) MAX
½"KO (0.875" HOLE):	ALL SIZES COMPLIANT

PHYSICAL:

HOUSING:	NYLON/PC
CONTACTS:	COPPER
PLATING:	TIN
TEMPERATURE:	105 C (221 F)
STRIP LENGTH:	⅜-½" (9,5 - 13 mm)
COLOR	
2-PORT:	RED/TRANSPARENT
3-PORT:	ORANGE/TRANSPARENT
4-PORT:	YELLOW/TRANSPARENT

STANDARDS & SPECIFICATIONS:

UL 486C, UL 467 GROUNDING
CSA C22.2 #188
IEC 998-2-2
CE CERTIFIED
RoHS COMPLIANT
UL 94V-2 FLAME RATING
US PATENT 7,507,106
US & FOREIGN PATENTS PENDING

WIRE RANGE:

	3/8" to 1/2" STRIP (all Models)	**3/8" STRIP (Models 32 and 34 only)**
SOLID	12 - 20 AWG	12 - 22 AWG
STRANDED	12-14 AWG (≤19 STRAND) 16 AWG (≤19 STRAND) 18 AWG (7 STRAND)	12-14 AWG (≤19 STRAND) 16 AWG (≤26 STRAND) 18 AWG (≤19 STRAND)
TIN BONDED	14 - 18 AWG (≤19 STRAND)	14 - 20 AWG (≤19 STRAND)

DIMENSIONS:

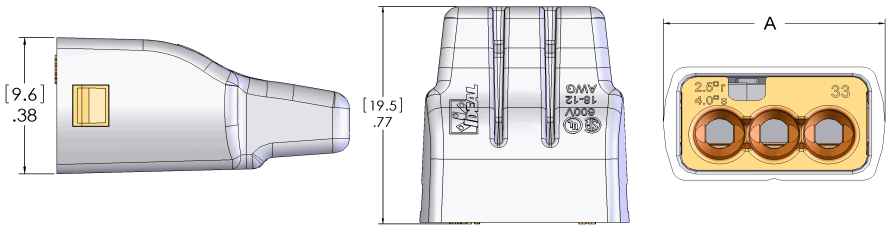

	A (in)	A (mm)
Model 32	0.52	13.2
Model 33	0.69	17.6
Model 34	0.82	20.9

ORDERING INFO:

CATALOG #	MODEL	# PORTS	PACKAGE TYPE:	WEIGHT LBS (KG):
30-1632	32	2	5,000 PIECE CARTON	20.1 (9,1)
30-1633	33	3	5,000 PIECE CARTON	24.9 (11,3)
30-1634	34	4	5,000 PIECE CARTON	34.0 (15.5)

FACTORY CONTACT:

ENGINEERED SOLUTIONS
IDEAL INDUSTRIES, INC.
BECKER PLACE SYCAMORE IL
USA 60178
P: 1-800-324-9571
F: 1-888-222-6140
E: oem@idealindustries.com

SALES CONTACT:

REVISION: MARCH 9, 2011

SECTION 26 05 26
Grounding Electrode Conductor

SECTION 26 05 33

Junction Box

SECTION 26 09 24
Wireless Switches

ENOCEAN ROCKER PAD WALL SWITCHES

SINGLE & DOUBLE SELF-POWERED, WIRELESS SWITCH

EnOcean
Self-powered IoT

PRODUCT DESCRIPTION:

The Single and Double Rocker Pads use EnOcean energy harvesting technology to communicate wirelessly with other wireless devices and provide convenient control of lighting. The rocker pads are self-powered and never require batteries because the simple act of pressing the rocker generates enough energy to send a wireless signal to other EnOcean-based devices. Use them in conjunction with sensors and controls to maximize efficiency and provide a level of comfort and convenience that cannot be achieved with traditional switches.

FEATURES:

- Interoperable-communicates wirelessly with other devices using the EnOcean Wireless Standard (902 MHz)
- Integrated kinetic energy harvester provides the energy to power the device and eliminates the need for wires or batteries
- No additional wire to run so installation is fast and easy. Install them where you want them and then move them anytime
- Decorator style rocker pads capable of performing switching and dimming functions
- Transmits unique RF message each time pressed or released
- Clean, contemporary styling, making it an attractive addition to compliment any décor
- 5-year warranty

INTEROPERABLE ENOCEAN PRODUCTS:

PRODUCT	MODEL NUMBER
Gateway Commissioning Software	GTWENOCNNWC300U
LED Relay Node	REENOCNLEDRU
Wireless Daylight Sensor	MSENOCNELLSU
Ceiling Mounted Occupancy Sensor	MSENOCNEOSCU
Wall Mounted Occupancy Sensor	MSENOCNEOSWU
Wall Switch-Double Paddle Rocker	WSENOCNEDRPU
Wall Switch-Single Paddle Rocker	WSENOCNESRPU

ORDERING*:

APPLICATION	ORDER CODE	MODEL
Single	103510	WSENOCNESRPU
Double	103511	WSENOCNEDRPU

***Switches require EnOcean Gateway Commissioning USB or LEDR field pairing for operating fixtures**

SPECIFICATIONS:

ITEM	SPECIFICATION	WSENOCNESRPU SINGLE	WSENOCNEDRPU DOUBLE
		DETAILS	
ELECTRICAL & PHYSICAL ASPECTS	Power supply	Mechanical Energy Harvesting	Mechanical Energy Harvesting
	Inputs/Ouputs	1 button rocker switch	2 button rocker switch
		Radio frequency (RF) transmitter	Radio frequency (RF) transmitter
	RF Communications	902 MHz	902 MHz
	Transmission Range	*80 ft.	*80 ft.
	RF Transmission	On press and release of rocker button	On press and release of rocker button
PHYSICAL ASPECTS	Dimensions	4.95" H x 3.21" W x 0.74" D	4.95" H x 4.52" W x 0.72" D
	Weight	3.98 oz.	5.3 oz.
	Mounting	Surface mounted on wall	Surface mounted on wall
		Can also be flush mounted by optional use of electrical wall box	Can also be flush mounted by optional use of electrical wall box
	Environment	Indoor use only	Indoor use only
		14° to 104°F	14° to 104°F
		20% to 95% relative humidity	20% to 95% relative humidity
	Agency Compliance	FCC, IC, UL	FCC, IC, UL
	Weight	4.09 oz.	4.4 oz.
	Mounting Height	36" - 42"	36" - 42"
	Agency Compliance	FCC, IC, RoHS, CE, R&TTE, UL	FCC, IC, RoHS, CE, R&TTE, UL

*** Range is dependent on obstacles and interference within the space.**

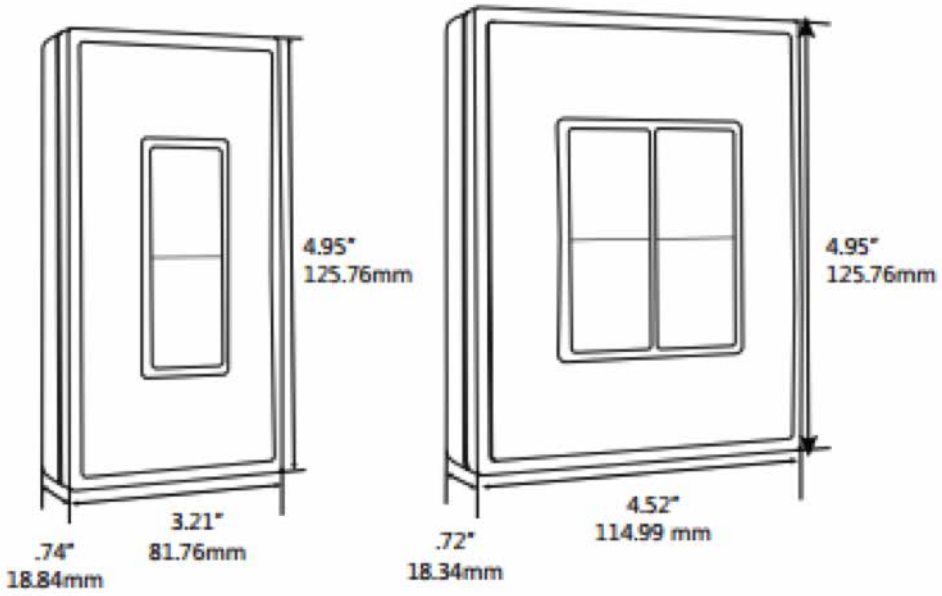

Rocker Pad (Single, Double)

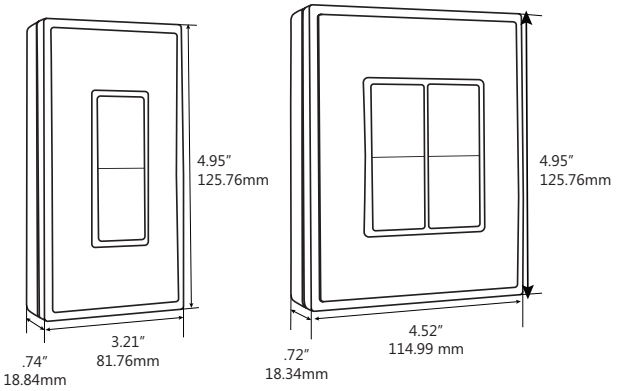

Package Contents
- Rocker pad
- Wall plate
- Screws and wall anchors

Tools Required
- Power drill, 3/16" bit
- Screwdriver
- Leveling tool

Product Description

Self-powered wireless Rocker Pads provide a flexible and convenient interface for switching, dimming and controlling electrical loads. Energy generated by pressing a rocker pad is harvested and used for RF communications with EnOcean-enabled devices.

Single and Double Rocker pads can be surface mounted or installed flush over an existing wall box.

Features Include:

- User interface for switching, dimming (when used with a dimmable controller) and more.
- Harvests energy from linear motion - no batteries.
- Transmits unique RF message each time pressed or released.

Specifications

Power Supply	Mechanical energy harvesting (power is generated by the motion of pressing the switch)
Transmission Range	80 ft. (25 m)
RF Communications	EnOcean 902 MHz (ESRPU, EDRPU) EnOcean 315 MHz (ESRPC, EDRPC)
EEP (EnOcean Equipment Profile)	F6-02-02
Dimensions	Single: 4.95" H x 3.21" W x 0.74" D (126mm x 82mm x 19mm) Double: 4.95" H x 4.52" W x 0.72" D (126mm x 115mm x 18mm)
Weight	Single: 3.9 oz (112g) Double: 5.3 oz (150g)
Environment	• Indoor use only • 14° to 104°F (-10° to 40°C) • 20% to 95% relative humidity (non-condensing)
Agency Compliance	FCC, IC

1. Planning

Take a moment to prepare and ensure optimal communications with other system components, and for user convenience.

- Pick a convenient location, perhaps near a door where occupants enter and exit
- Consider the construction materials in the space and obstacles that may interfere with RF signals

2. Installing

estimated time: 10 minutes

1. Decide where you want to mount the rocker pad. The standard height for wall switches is 49" or 125 cm on center.
2. Remove the wall plate from the rocker pad assembly.
3. Decide which of the two installation options is appropriate.

A. Surface Mounted Installation

i. Using a level and a pencil, lightly mark 2 small dots to align the top edge of the mounting plate.

ii. Mark the mounting screw drill points.

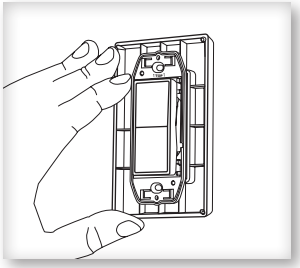

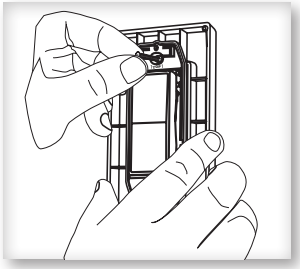

iv. Drill holes for the wall anchors with a 3/16" drill bit and insert wall anchors.

v. Insert the top screw(s) loosely and level the back plate.

vi. Insert the bottom screw(s), and then hand tighten the top screw(s).

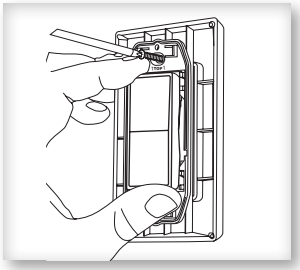

vii. Attach the wall plate on top of the rocker pad using the two screw holes.

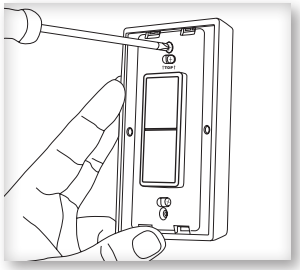

NOTE: For proper assembly, make sure to align the "top" labels on the rocker pad and wall plate.

© 2014 EnOcean GmbH

B. Flush Mounted Installation

NOTE: When installing over an existing wall box make sure any bare electrical wires are capped. Where local building codes require the use of UL certified wallplates, please replace the provided wallplate by a certified wallplate made of plastic. Metal wallplates are not recommended, as they would reduce radio coverage!

i. Remove the assembly screws which hold the wall plate, rocker pad, and mounting plate together.

ii. Use a tool to carefully pry the rocker pad free from the back plate. The back plate is not used for this option.

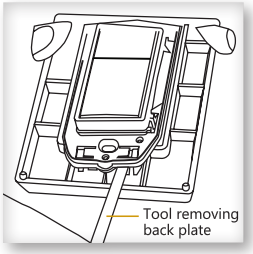

iii. Mount the rocker pad over the existing wall box using the two screw holes,

NOTE: For proper assembly, make sure to align the "top" labels on the rocker pad and wall plate.

iv. Attach the wall plate on top of the rocker pad using the two wall box screw holes.

4. Insert the trim plate tabs in the bottom slots, and then lightly flex the plate to insert top tabs.

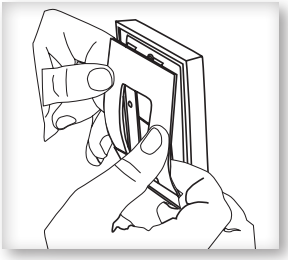

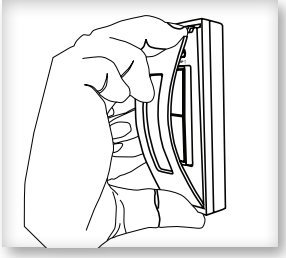

TIP: To remove the trim plate, use a flat-head screwdriver to depress the trim plate tabs using the 2 slots on the bottom of the wall plate. Alternatively, use a fingernail to press down along the top groove and flex the tabs out of the slots.

5. Click the rocker pad on and off to test the mechanism.

NOTE: To activate dimming, press and hold; top button to increase, bottom button to decrease.

3. Linking

Two or more compatible devices can be linked and configured to provide the desired control. There are two basic types of devices in the system; transmitters and transceivers.

- **Transmit-only:** Transmitters are simple energy-harvesting devices that send RF messages to communicate a condition, level, or state. Transmitters can only be linked to transceivers. Examples > Self-powered Light Switches, Occupancy Sensors
- **Transmit & Receive:** Transceivers are controlling devices that send as well as receive RF messages. They also process relevant control logic, and actuate the appropriate outputs (switching a light on or off for example). Transceivers can be linked with transmitters as well as other transceivers. A transceiver can have up to 30 devices linked to it.
  Examples > Relays, Gateways

The Rocker Pads are Transmit-only Devices.

To link the Rocker Pad to a transceiver; the transceiver must first be powered, within wireless range of the sensor, and set to accepts links.

To Link or Unlink a Rocker Pad

1. Set the desired transceiver to the desired Link/Unlink mode. (refer to receiving device's installation guide).
2. Click the rocker pad's top button three times quickly.
   ••>The rocker pad is now linked.

Refer to the "Linking" section of the transceiver/controller installation guides to verify the linking process.

Troubleshooting

Problem	Solution Checklist
The rocker pad does not generate a message	▪ Verify the rocker pad is installed in the proper orientation
The linked device does not respond to wireless messages	▪ Check for environment or range issues ▪ Verify the device is linked ▪ Check the transceiver connection and the wiring for errors ▪ Check if appropriate devices are linked according to good system planning

902 MHz: Contains FCC: SZV-PTM210U IC: 5713A-PTM210U

315 MHz: Contains FCC: SZV-PTM210C IC: 5713A-PTM210C

This device complies with part 15 of the FCC rules and Industry Canada ICES-003. Operation is subject to the following two conditions: (1) This device may not cause harmful interference, and (2) this device must accept any interference received, including interference that may cause undesired operation.

IMPORTANT! Any changes or modifications not expressly approved by the party responsible for compliance could void the user's authority to operate this equipment.

Le présent appareil est conforme aux CNR d'Industrie Canada applicables aux appareils radio exempts de licence. L'exploitation est autorisée aux deux conditions suivantes: (1) l'appareil ne doit pas produire de brouillage, et (2) l'utilisateur de l'appareil doit accepter tout brouillage radioélectrique subi, meme si le brouillage est susceptible d'en compromettre le fonctionnement.

IMPORTANT! Tous les changements ou modifications pas expressément approuvés par la partie responsable de la conformité ont pu vider l'autorité de l'utilisateur pour actioner cet équipment.

SECTION 26 09 13

Breaker Box Monitor

TED Spyder

DESCRIPTION: The TED SPYDER is a low voltage device that is an add-on to the TED MTU. The SPYDER measures individual branch circuits using smaller 'doughnut-type' CTs.

One SPYDER provides EIGHT additional individual circuit measurements! These discrete measurements are then sent through the MTU data-port and are recorded into memory in Footprints software. Software configuration selections provide options for tailoring the SPYDER to a specific application.

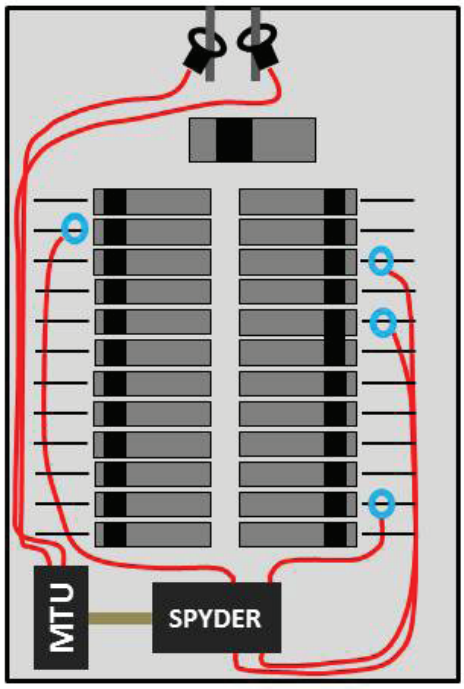

- A couple of additional circuits

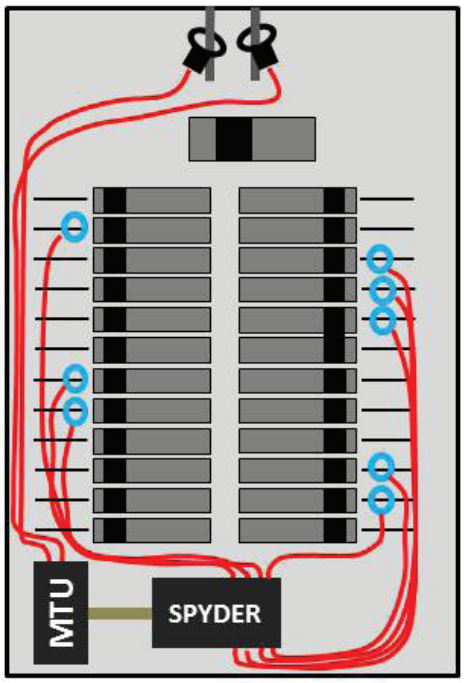

- up to 8 additional circuits

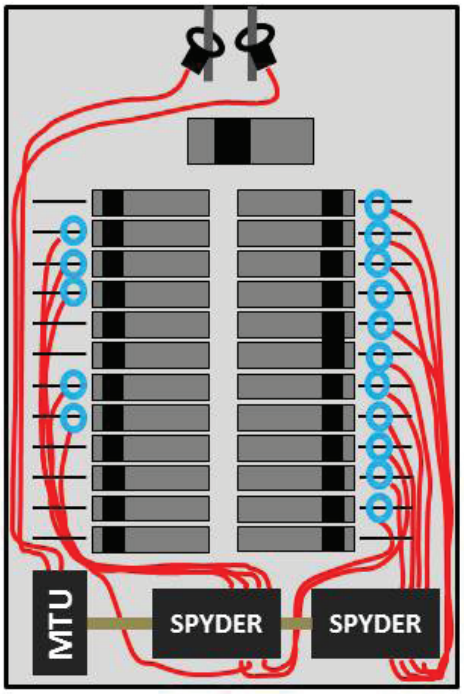

- add a 2nd Spyder for up to 16 circuits

Applications Include:
Individual Load/Circuit Energy Data – Determine which loads are costing you more!
Grouping Circuits – Group loads for sub-metering or combine loads for a single Energy Measurement
(for example: Group the HVAC compressor circuit + Air Handler circuit to get entire HVAC load)

Footprints can record energy-data for up to 32 SPYDER inputs through any combination of the following configurations:

Maximum inputs per SPYDER: 8 (eight)

Maximum SPYDERs per MTU: 2 (two)

Maximum SPYDERs per ECC (or one TED system): 4 (four)

Multiple packages to choose from for variable CT-sizes.

20A Solid Core Doughnut CTs

- Suggested for measuring any load on a 15A or 20A circuit that is greater than 100W.
- Accuracy: +/- 7%* 200W-2.4kW
- Minimum load: 60W, (Reading will be zero when below this threshold)
- Inside diameter: 7.2mm (0.28 inches)

60A Solid Core Doughnut CTs

- Suggested for measuring any load on a 20A-60A circuit that is greater than 500W.
- Accuracy: +/- 7%* 500W-14.4kW
- Minimum load: 200W, (Reading will be zero when below this threshold)
- Inside diameter: 7.2mm (0.28 inches)

200A Solid Core Doughnut and Split-Core Hinged CTs

- Suggested for any load on a 20A-200A circuit that is greater than 500W.
- Accuracy: +/- 7%* 500W-14.4kW
- Minimum load: 200W, (Reading will be zero when below this threshold)
- Inside diameter: 16.2mm (0.63 inches)

* Spyder readings assume an average power factor of 92%. The Spyder can typically be improved to report within <+/-5% accuracy by using the MTU's power factor measurement to adjust the calibration. Calibration instructions can be found in the TED Pro User's manual:
https://www.theenergydetective.com/downloads/ECCUsermanual.pdf

Energy and Cost data is stored for Export or Graphing for the following increments:

Minute Data: 25 hours

Hourly Data: 8 days

Daily Data: 5 weeks

Monthly Data: 13 months

Using a Spyder to monitor a 240V circuit or 3-phase circuit:

1) Connect one CT around each leg of a 240V circuit (use 2 CTs), or for 3-phase circuits, use 3 CTs.

- or -

2) If the load is balanced, a single CT may be used on a 240V circuit or 3-phase circuit. Simply connect one CT over one leg of the circuit (either leg). *Change the multiplier* in Spyder Setup from the default (1) to a (2) for a 240V circuit, or (3) for a 3-phase circuit.

Grouping:
A Group can only be formed using the legs of the respective Spyder. When using multiple Spyders, legs from one Spyder can not be Grouped with the leg(s) of a different Spyder.

SPYDER SETUP INSTRUCTIONS

The Spyder is an optional add-on component for TED Pro, which allows for the monitoring of branch circuits within an electrical panel. The Spyder behaves differently from an MTU, in that it does **not** record SECOND-data; it does record MINUTE, HOUR, etc. Each 'leg' of data is stored independently and can be viewed on the Spyder Summary, graphs, historically, or exported.

We highly recommend that you read the entire section on the Spyder setup so that you have a good understanding of the procedures and how it will work.

When installing the Spyder in your electric panel, it is vital that you make note of the circuit that each CT is connected to. Once the Spyder is installed, you will **name** the corresponding leg-connection.

Leg number 1 must correspond with the same leg number as shown in the picture here. Note on the Spyder (image below) that each 'leg' is numbered.

Naming your Spyder legs in the Reference Diagram is purely for your reference, to help you remember what Circuit each CT is connected to.

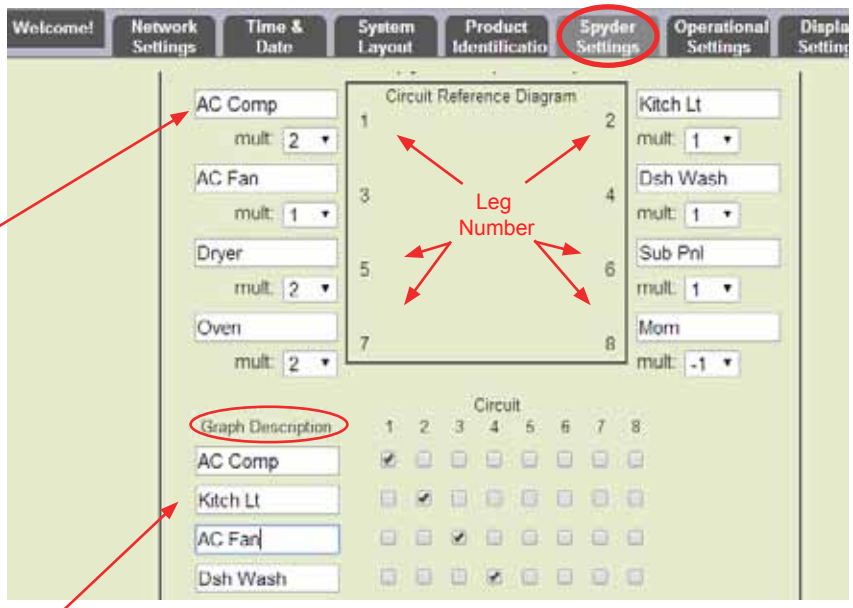

The names that you input under the "Graph Description" will appear in the Spyder Summary, Graphs, Export, etc. You may desire to simply use the names from the Reference Diagram above as your Graph Descriptions, however, if you GROUP some of the legs to arrive at a composite measurement, you may desire to have a totally different name. See GROUPING section below for more details.

MULT (multiplier)

The multiplier can be changed, depending on the type circuit you have CT connected to. If it is a regular single-pole breaker, 110V circuit, you would leave the default of 1 selected. If the CT has been installed around one leg of a 240V 2-pole breaker (like an AC compressor as shown on Leg 1 above), you have the option of either a) using a single CT and changing the Multiplier to "2", or b) use a second CT to connect to the second leg - in which case you would leave each multiplier set to "1." The loads are generally balanced in a residence, and you would be fine using a single CT on a 2- or 3-pole breaker and setting the multiplier at a 2 or 3, whichever is appropriate. However, in a commercial or industrial setting, it would be wise to measure the circuit to determine whether it is balanced or not.

Using a Negative Multiplier

If you wanted to subtract a circuit from the Spyder total, you would use a negative multiplier. For example, if you had a Mother-in-Law suite that you wanted to separate from the rest of the loads, you would simply change the multiplier to a "-1."

You would do the same thing if you had a sub-panel you didn't want to include. Change the multiplier to "-1."

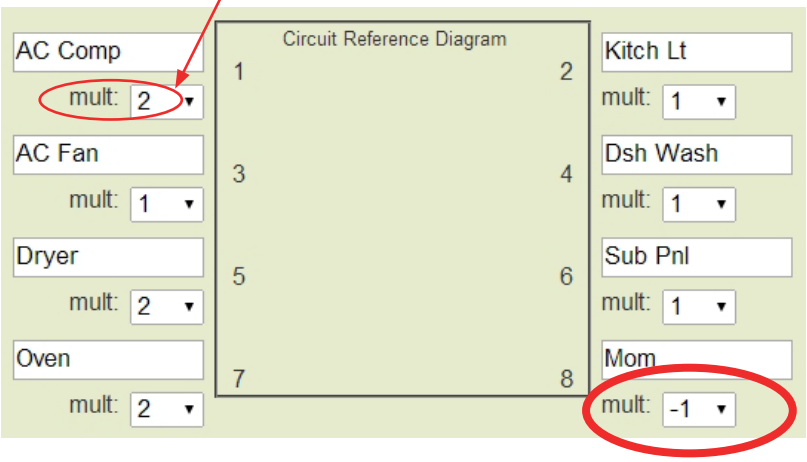

SOLAR and MULTIPLIER

If you use a Spyder leg to monitor your SOLAR/WIND **PRODUCTION**, the multiplier *must* be changed to a NEGATIVE number.

© 2014 Copyright Energy, Inc. All rights reserved

We recommend checking the boxes diagonally as it relates to the Circuit indicated above the boxes.

THEN, take the names from the Circuit Reference Diagram and list them down the Graph Description column.

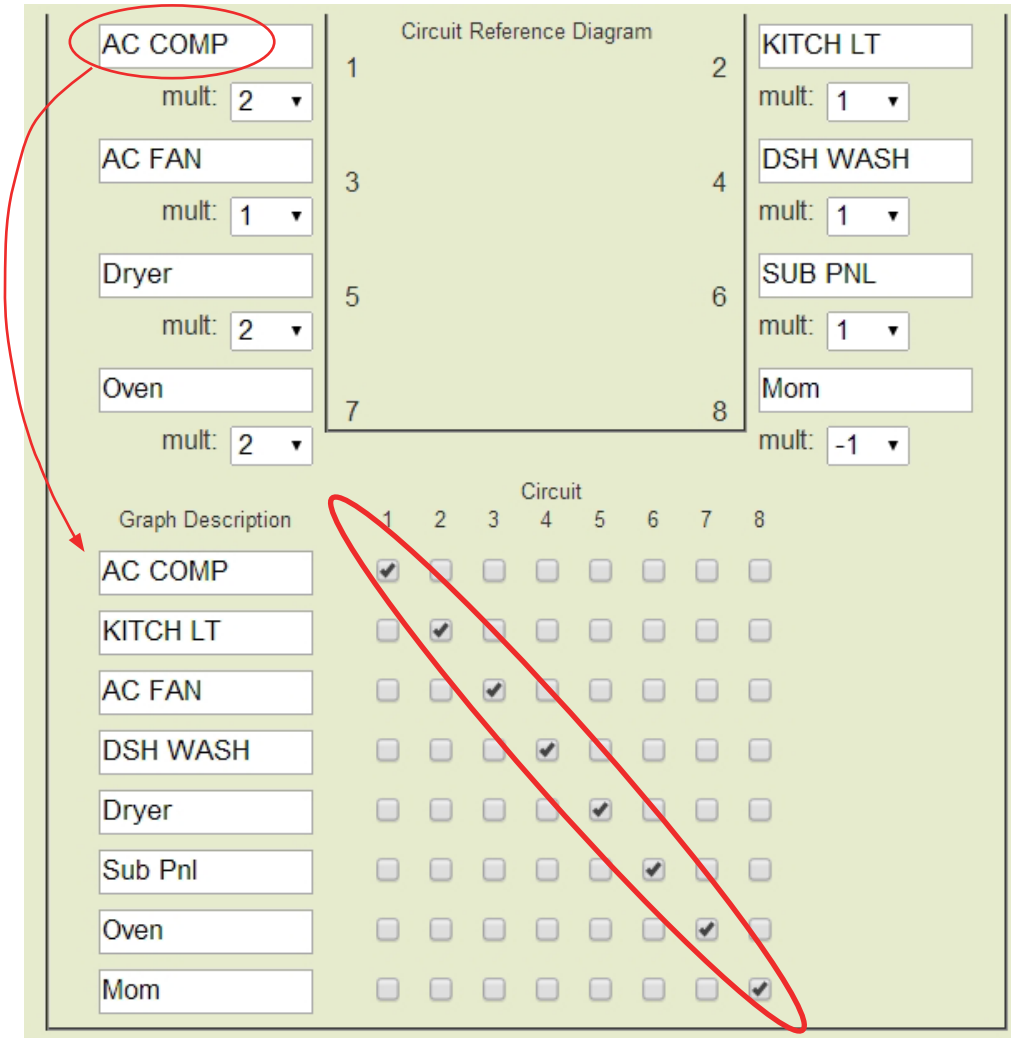

GROUPING Spyder Legs

As previously noted, it is possible to group Spyder legs. Grouping legs gives you many options. The only drawback to grouping Spyder legs is that it takes up a memory location(s) within TED. Each Spyder has 8 allocated memory locations. You can use the 8 locations to store data from the eight individual CTs that you connected - as shown above.

For example, most air conditioning systems have two components - the compressor and the fan (or blower). If you want to see what your *entire* AC system costs, you would need to combine the compressor with the fan. In the example to the right, you will see that we have changed the 2nd slot to read "AC All" and selected Circuits 1 and 3 to be a group, and moved "Kitch Lt" down a line.
In this example, you will see that we no longer have the "AC Fan" as a line-item, so it will not show up on any graphs, history, etc. We have "AC All" in the space where 'AC Fan' was - so that is what will appear in the Graphs, History, etc. Notice that 'AC Fan' leg in the Circuit Reference Design remains on leg 3. You can calculate what the AC Fan load is by subtracting the "AC Comp" from the "AC All."

© 2014 Copyright Energy, Inc. All rights reserved

A few miscellaneous comments regarding the Spyder:

- You can use a leg in as many Groups as you wish;
- You can have as many legs in a Group as you wish;
- A single MTU can accommodate two Spyders;
- You can not add a leg from Spyder 1 to be in a Group in Spyder 2;
- Spyder second-data is not recorded (minute, hour, day, etc. are recorded);
- Leg-loads less than 150 Watts will be less accurate.
- Spyder-data can be exported to CSV-file (Excel) at any time

© 2014 Copyright Energy, Inc. All rights reserved

SECTION 26 27 26

Outlet 120 Duplex Floor

DESCRIPTION:
Stainless Steel Finish Pop Up Counter Top Plate with PUFP-WB (wood floor box)

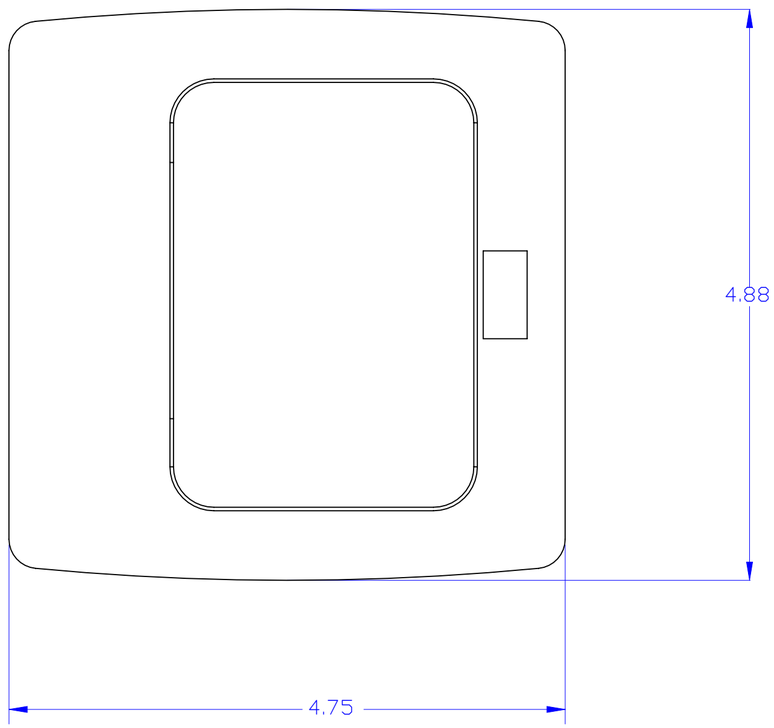

TOP VIEW

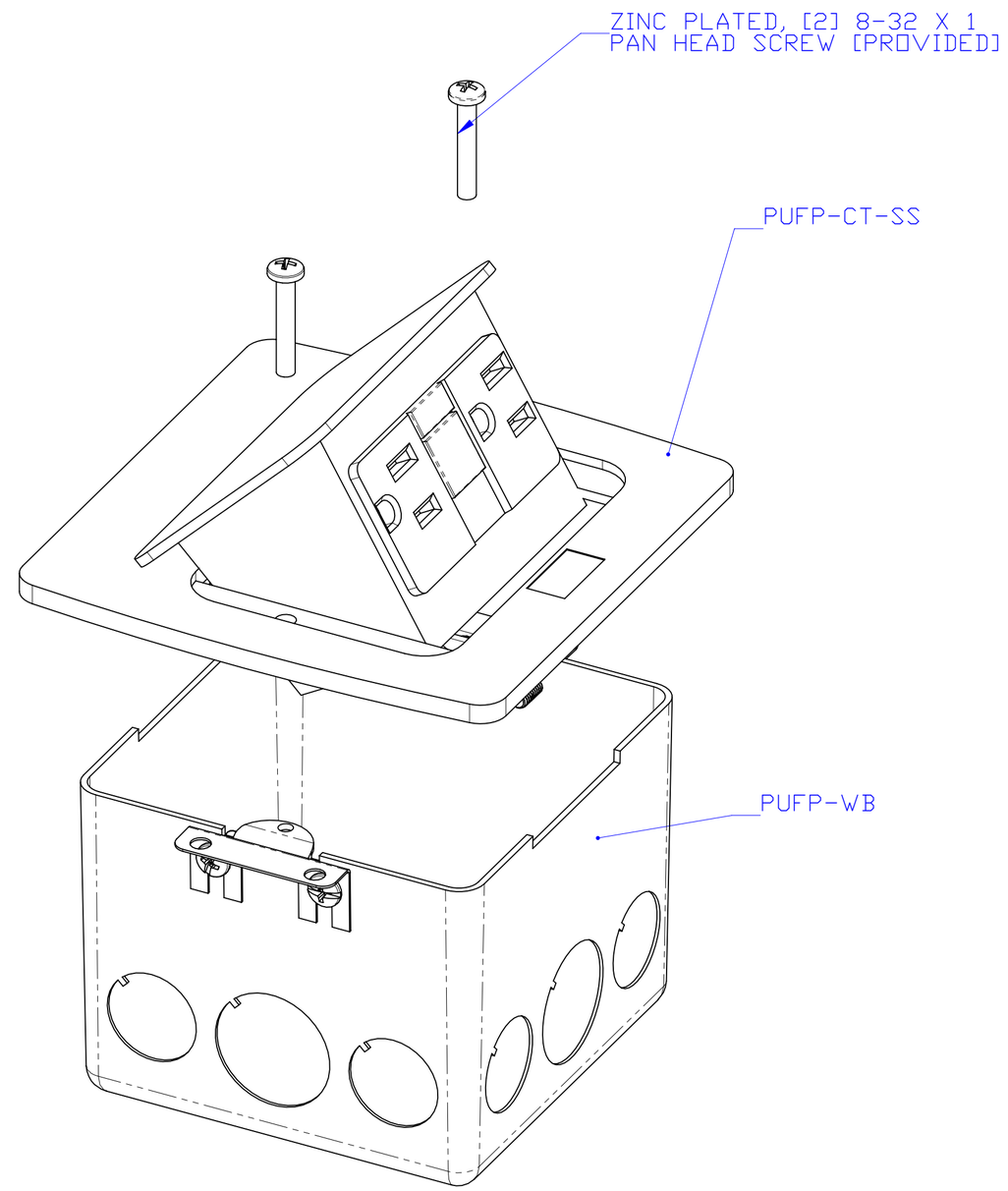

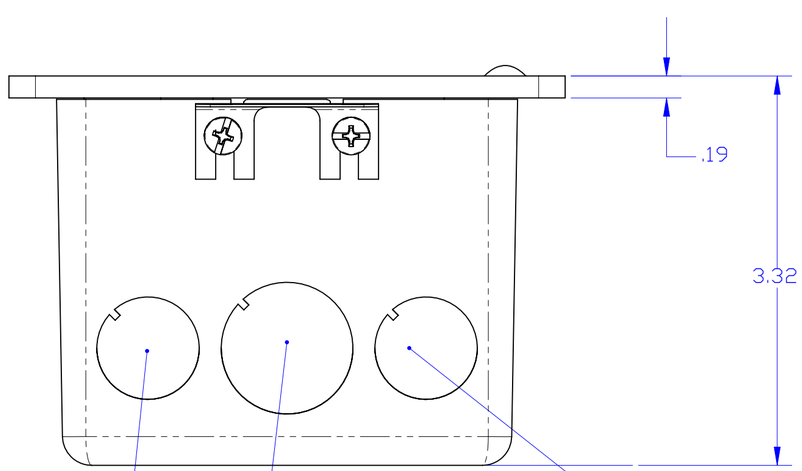

1/2" KNOCK-OUT TYP.
(OPOSITE SIDE)

3/4" KNOCK-OUT TYP.
(OPOSITE SIDE)

1/2" KNOCK-OUT TYP.
(OPOSITE SIDE)

FRONT VIEW

LEW ELECTRIC
FITTINGS COMPANY
SERVING THE ELCTRICAL INDUSTRY SINCE 1901

1801 W. St. Charles Rd. Maywood, IL 60153
PHONE: 708-345-2075

		NAME	DATE
UNLESS OTHERWISE SPECIFIED:			
DIMENSIONS ARE IN INCHES TOLERANCES: FRACTIONAL ± ANGULAR: MACH ± BEND ± TWO PLACE DECIMAL ± THREE PLACE DECIMAL ±	DRAWN	PJG	9/10/2008
INTERPRET GEOMETRIC TOLERANCING PER:	COMMENTS:		
MATERIAL			
FINISH			
DO NOT SCALE DRAWING			

TITLE:
PUFP-CT-SS

SIZE	DWG. NO.	REV
C	200183	A
	WEIGHT:	SHEET 1 OF 2

LEW ELECTRIC FITTINGS COMPANY

PUFP-CT SERIES INSTALLATION GUIDE

It is highly recommended that in addition to reading the below installation instructions that the installation video is watched by visiting https://youtu.be/tEaQM25GRGg before installation of the PUFP-CT series.

PRIOR TO INSTALLATION:
1. To ensure compliance with local electric codes, please contact your local electrical inspector prior to installation
2. Do not install PUFP-CT prior to electrical inspector authorization.
3. Installation should only be done by a licensed and bonded electrical contractor.
4. All power must be turned off at its source prior to installation. Failure to do so may result in injury or death.
5. All non GFI PUFP-CT series must be connected to a GFCI circuit breaker. Failure to do so will increase the risk of injury.
6. If anytime water enters into the PUFP-CT, turn off power at its source and have the unit replaced by a licensed and bonded electrical contractor
7. LEW ELECTRIC ACCEPTS NO RESPONSIBILITY IF THE ABOVE CONDITIONS ARE NOT MET.

REQUIRED TOOLS:
-Construction Adhesive, Crimpling Pliers/ Wire Strippers, Philips Head Screw Driver, and Drill.

INSTALLATION (Part One):
1. Prior to installation, a professional granite cutter should cut a 4 1/16" x 4 1/16" hole in the desired location of the PUFP-CT.
2. Always use the supplied PUFP-WB stamped steel box
3. The tabs on the side of the PUFP-WB box must be attached to the BOTTOM of the countertop. Please note that the PUFP-CT will not work if the tabs are mounted on the top of the counter.
4. Apply construction adhesive on the top of the 2 tabs on the PUFP-WB box to secure the box to the bottom of the countertop (alternately wood blocks can be secured on the bottom of the counter so that you can install the box using 1 ½" wood screws.
5. Please note that the tabs can be moved to the lower set of holes on the PUFP-WB box to accommodate varying depths of counter top.
6. For best performance it is preferred to mount the box with the top edge sitting lower in the hole, which leaves more room for the inside of the box (see video).

WIRING

1. Once the box is secured to the bottom of the countertop, run wiring into the ½" knock out on the side of the box furthest away from the front of the countertop (preferred method). Alternately, if ¾" knockouts are needed, use the knockouts in the bottom of the box furthest away from the front of the counter. **If the knockouts are used closest to the front of the counter, the unit will not open.**
2. Only use 12 or 14 gauge stranded U.L. listed wire.
3. Strip the wires
4. Insert the stripped wire into the quick connect terminal box making sure that no striped wire is exposed.
5. Tighten the screws to secure the wires to the terminal block.
6. Excess wire should be pushed out of the box or made to be as flat as possible on the bottom of the PUFP-WB box. **Failure to push the wire out of the box or make it flat in the box will interfere with the opening mechanism and the unit will not be able to pop open.**

INSTALLATION (Part Two)

1. Place the PUFP-CT cover on top of the PUFP-WB box
2. Remove the protective film from the PUFP-CT cover and press the open tab on the PUFP-CT cover exposing the two mounting screw holes inside the cover.
3. Line up the two screw holes with the PUFP-CT cover and the PUFP-WB box and using the 2 provided screws, secure the cover to the box (do not over tighten as this may interfere with the opening mechanism of the box.)
4. To close the cover, press and hold the open tab while pressing down on the cover until you hear a click and the unit is locked into place.
5. Open and close the unit several times to make sure that the unit is opening properly and at the desired speed. All units are preset to the optimal functioning speed at the factory before they are shipped.
6. If the desired opening speed has not been achieved, remove the remove the PUFP-CT from the counter and turn the PUFP-CT cover upside down. Locate the tension screw and turn the screw to add or subtract the opening speed.

TROUBLE SHOOTING

SYMPTOM	RESOLUTION
Button does not work	Make sure that the tabs on the PUFP-WB box were installed underneath the counter. Turn off power at its source, take the PUFP-CT out of the box and make sure that no excess wires are interfering with the opening mechanism. Open the cover by pressing button and make sure that the mounting screws are not over tightened Turn power off at its source. Place the cover upside down, apply a small amount of WD-40 or similar lubricant to the bottom of button
Unit pops up too slow	Turn off power at its source, remove the PUFP-CT from the counter and turn the PUFP upside down. Locate the tension screw and turn the screw to add or subtract opening speed

SECTION 26 27 00

DC Light Microcontrollers

chipKIT™ uC32™ Board Reference Manual

Revision: July 17, 2012
Note: This document applies to REV A of the board.

1300 NE Henley Court, Suite 3
Pullman, WA 99163
(509) 334 6306 Voice | (509) 334 6300 Fax

Overview

The chipKIT uC32 is based on the popular Arduino™ open-source hardware prototyping platform and adds the performance of the Microchip PIC32 microcontroller.

The uC32 is the same form factor as the Arduino Uno board and is compatible with Arduino shields. It features a USB serial port interface for connection to the IDE and can be powered via USB or an external power supply.

The uC32 board takes advantage of the powerful PIC32MX340F512 microcontroller. This microcontroller features a 32-bit MIPS processor core running at 80Mhz, 512K of flash program memory and 32K of SRAM data memory.

The uC32 can be programmed using the Multi-Platform Integrated Development Environment (MPIDE), an environment based on the original Arduino IDE modified to support PIC32. It contains everything needed to start developing embedded applications.

In addition, the uC32 is fully compatible with the advanced Microchip MPLAB® IDE and the PICKit3 in-system programmer/debugger.

The uC32 is easy to use and suitable for both beginners and advanced users experimenting with electronics and embedded control systems.

The uC32 provides 42 I/O pins that support a number of peripheral functions, such as UART, SPI, and I^2C ports and pulse width modulated outputs. Twelve of the I/O pins can be used as analog inputs or as digital inputs and outputs.

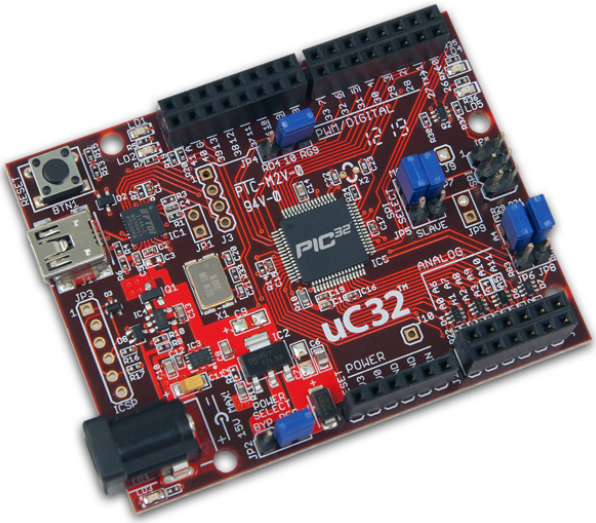

Features include:

- Microchip® PIC32MX340F512H microcontroller (80 Mhz 32-bit MIPS, 512K Flash, 32K SRAM)
- compatible with many existing Arduino code samples and other resources
- Arduino Uno form factor
- compatible with many Arduino shields
- 42 available I/O pins
- two user LEDs
- PC connection uses a USB A > mini B cable (not included)
- 12 analog inputs
- 3.3V operating voltage
- 80Mhz operating frequency
- 75mA typical operating current
- 7V to 15V input voltage (recommended)
- 20V input voltage (maximum)
- 0V to 3.3V analog input voltage range
- +/-18mA DC current per pin

Copyright Digilent, Inc. All rights reserved. Other product and company names mentioned may be trademarks of their respective owners.

chipKIT uC32 Hardware Overview

The uC32 has the following hardware features:

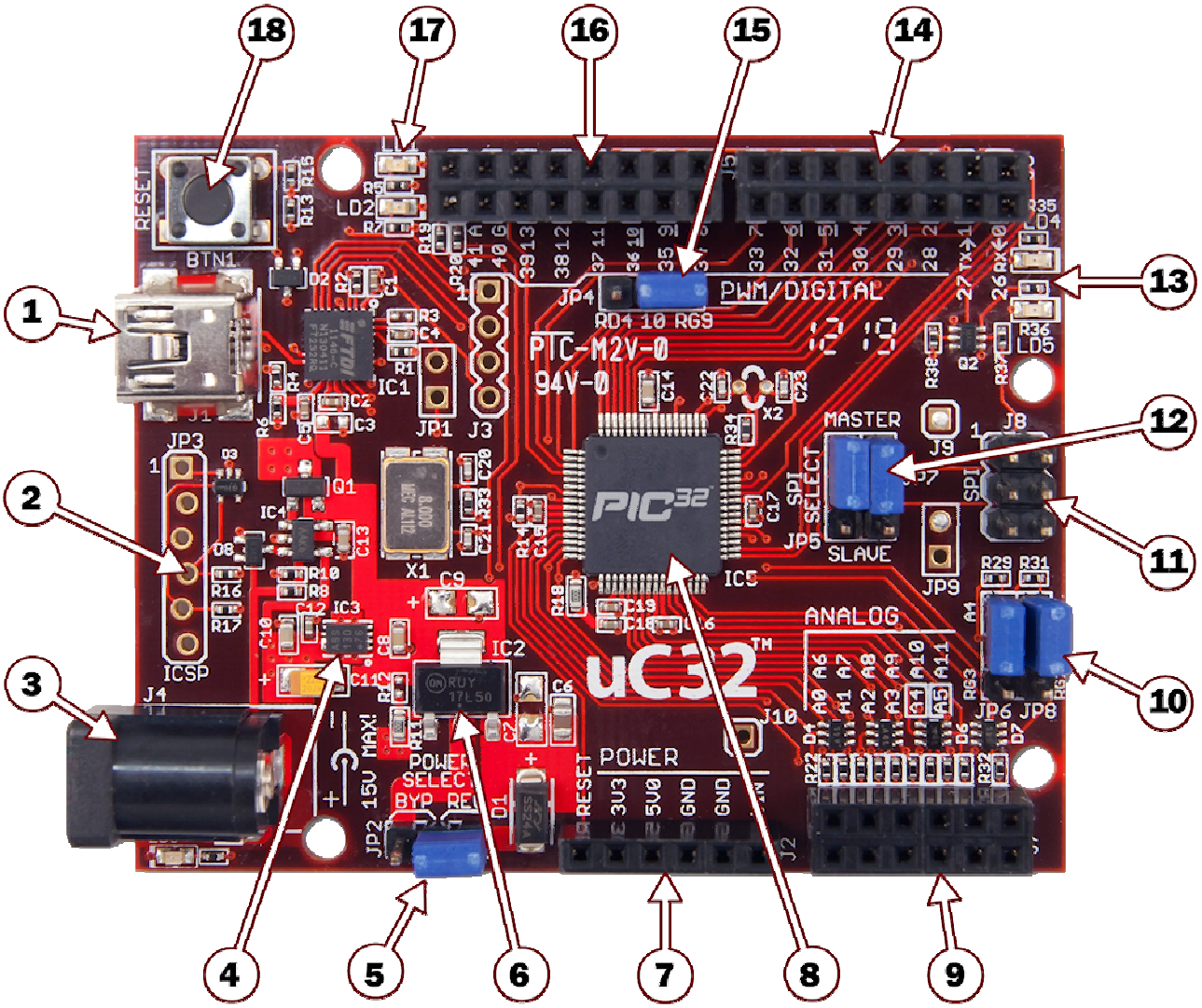

1. **USB Connector for USB Serial Converter**

   This connects to a USB port on the PC to provide the communications port for the MPIDE to talk to the uC32 board. This can also be used to power the uC32 board when connected to the PC.

Copyright Digilent, Inc. All rights reserved. Other product and company names mentioned may be trademarks of their respective owners.

2. **JP3 – Microchip Debug Tool Connector**

   This connector is used to connect Microchip programmer/debugger tools, such as the PICkit™3. This allows the uC32 board to be used as a traditional microcontroller development board using the Microchip MPLAB® IDE.

3. **J4 – External Power Connector**

   This is a 5.5mm x 2.1mm barrel connector used to power the uC32 board from an external power supply. It is wired with the center terminal as the positive supply voltage. The power supply voltage must be in the range 7V to 15V.

4. **Power Supply – 3.3V Regulator**

   Voltage regulator for the 3.3V power supply. This power supply can provide up to 500mA of current.

5. **JP2 – Power Select Jumper**

   This jumper is used to route power from the external power connector through the on-board 5V voltage regulator or to bypass the 5V regulator. The REG position routes power through the 5V regulator. The BYP position bypasses the on-board 5V regulator. With this jumper in the BYP position the maximum input voltage that can be applied at the external power connector is 6V.

6. **Power Supply – 5V Regulator**

   This on-board 5V voltage regulator regulates the input voltage applied at the external power connector to 5V. This is used to power the 3.3V regulator and to provide 5V power to expansion shields. This regulator can provide up to 800mA of current.

7. **J2 – Shield Power Connector**

   This connector provides power to I/O expansion shields connected to the board.

8. **PIC32 Microcontroller**

   The PIC32MX340F512H microcontroller is the main processor for the board.

9. **J7 – Analog Signal Connector**

   This connector provides access to analog/digital I/O pins on the microcontroller.

10. **JP6/JP7 – A4/A5 Signal Select Jumpers**

    These jumpers are used to switch pins 9 and 11 on connector J7 between analog inputs A4 and A5 or the I^2C signals SDA and SCL.

11. **J8 – SPI Signal Connector**

    This connector provides alternative access to the SPI signals. This is used by some shields for access to the SPI bus.

12. **JP5/JP7 – SPI Master/Slave Select Jumpers**

    These jumpers are used to switch the SPI signals for use of the uC32 board as an SPI master device or as an SPI slave device. Both jumpers should be switched together. Place the shorting blocks in the MASTER position for master operation and in the SLAVE position for slave operation. Normally, these jumpers are in the MASTER position.

Copyright Digilent, Inc. All rights reserved. Other product and company names mentioned may be trademarks of their respective owners.

13. User LEDs

Two LEDs connected to digital signal pins 13 and 43.

14. J6 – Digital Signal Connector

This connector provides access to digital I/O pins on the microcontroller.

15. JP4 – Pin 10 Signal Select Jumper

16. This jumper is used to switch connector J5 pin 5 (digital signal 10) between pulse width modulator (PWM) operation and SPI operation. The jumper is placed in the RD4 position for PWM output and in the RG9 position for SPI slave operation. The shorting block on this jumper will normally be in the RD4 position. The only time it normally needs to be in the RG9 is when using the Uno32 board as an SPI slave device.

17. J5 – Digital Signal Connector

This connector provides access to digital I/O pins on the microcontroller.

18. Communications Status LEDs

These LEDs indicate activity on the USB serial interface.

19. Reset Button

This button can be used to reset the microcontroller, restarting operation from the boot loader.

Copyright Digilent, Inc. All rights reserved. Other product and company names mentioned may be trademarks of their respective owners.

chipKIT uC32 Jumper Settings

The chipKIT development platforms use a Microchip PIC32 microcontroller. These are 32-bit products that bring unprecedented features to the Arduino community. In order to maintain compatibility with existing hardware and software, additional jumpers and row headers are provided. This document describes the functionality of the jumpers listed in the figure below.

chipKIT uC32 Jumpers

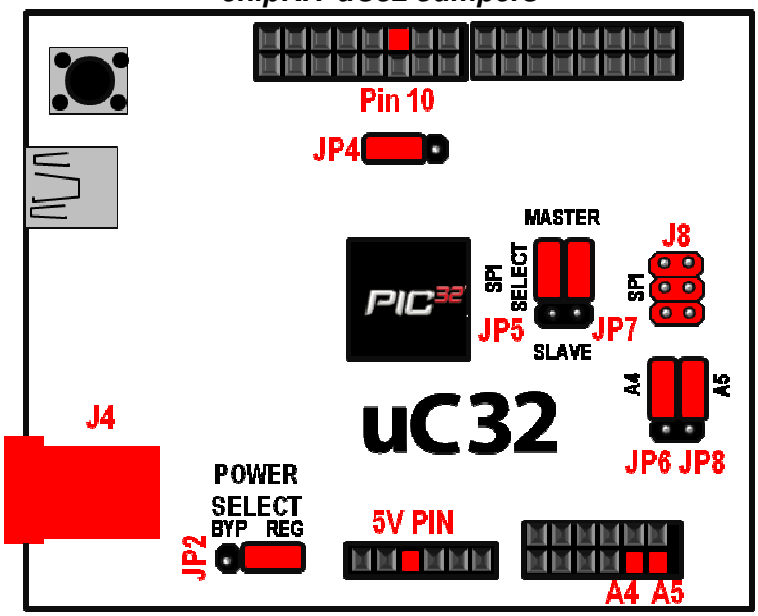

Jumper	Function
JP2	**POWER SELECT:** Used to connect/bypass the on-board 5V regulator when using an external power supply connected to J4. J4 supply is regulated (i.e., 5V will be present on 5V pin) J4 supply bypasses regulator (i.e., Supply voltage will be present on 5V pin) **Note:** To protect the PIC32 MCU, a 3.3V on-board regulator will always be enabled regardless of JP2 settings. **Note:** If you're not sure what POWER SELECT does, be safe and keep JP2 on the two right-most pins so the J4 supply is regulated.
JP4	**PWM/SPI SLAVE:** Configures pin 10 on J5 to be used as a PWM output or a Slave Select input for use as an SPI slave device. Pin 10 configured as an SPI SS input Pin 10 configured as a PWM output

Copyright Digilent, Inc. All rights reserved. Other product and company names mentioned may be trademarks of their respective owners.

JP5/JP7

SPI SELECT: Used to configure the chipKIT as either a Master or Slave when using the SPI. The chipKIT board can be connected to another device or even another chipKIT through the SPI connector (J8).

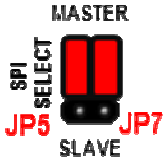

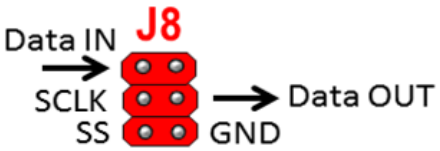

chipKIT configured as an SPI Master

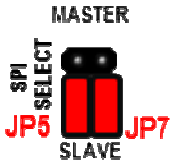

chipKIT configured as an SPI Slave

For more information on SPI, please visit Wikipedia's SPI page:
http://en.wikipedia.org/wiki/Serial_Peripheral_Interface_Bus#Mode_Numbers

JP6/JP8

I^2C/ANALOG PIN SELECT: Used to configure A4 and A5 for functionality as an Analog input or to be used as I^2C communication pins.

A4 and A5 on J7 are configured to be used as analog inputs

A4 and A5 are configured to be used as I^2C communication lines (A4 – SDA, A5 – SCL)

For more information on I^2C, please visit Wikipedia's I^2C page at:
http://en.wikipedia.org/wiki/I2C

Copyright Digilent, Inc. All rights reserved. Other product and company names mentioned may be trademarks of their respective owners.

chipKIT uC32 Hardware Description

MPIDE and USB Serial Communications

The uC32 board is designed to be used with the Multi-Platform IDE (MPIDE). Digilent produced the MPIDE development platform by modifying the Arduino™ IDE. It is backwards-compatible with the Arduino IDE.

The MPIDE uses a serial communications port to communicate with a boot loader running on the uC32 board. The serial port on the uC32 board is implemented using an FTDI FT232R USB serial converter. Before attempting to use the MPIDE to communicate with the uC32, the appropriate USB device driver must be installed.

The uC32 board uses a standard mini-USB connector for connection to a USB port on the PC.

When the MPIDE needs to communicate with the uC32 board, the board is reset and starts running the boot loader. The MPIDE then establishes communications with the boot loader and downloads the program to the board.

When the MPIDE opens the serial communications connection on the PC, the DTR pin on the FT232R chip is driven low. This pin is coupled through a capacitor to the MCLR pin on the PIC32 microcontroller. Driving the MCLR line low resets the microcontroller, restarting execution with the boot loader.

This automatic reset action (when the serial communications connection is opened) can be disabled. To disable this operation, there is a cut-able trace on the bottom of the board between the pins on JP1. JP1 is normally not loaded. If the trace between the pins on JP1 has been cut, the automatic reset operation can be restored by loading JP1 and inserting a shorting block across it.

Two red LEDs (LD1 and LD2) will blink when data is being sent or received between the uC32 and the PC over the serial connection.

The header connector J3 provides access to the other serial handshaking signals provided by the FT232R. Connector J3 is not loaded at the factory and can be installed by the user to access these signals.

Power Supply

The uC32 is designed to be powered either via USB or from an external power supply. There is an automatic switch-over circuit that causes the external supply to be used if both supplies are present.

The power supply section in the uC32 uses two voltage regulators. The first regulates the external voltage to 5V to power the VCC5V0 bus. The second regulates the VCC5V0 bus to 3.3V to provide power to the VCC3V3 bus that powers the PIC32 microcontroller.

The 5V voltage regulator is normally an NCP1117. The board is designed to be able to also use an LM1117, but the NCP1117 is the part normally used. The NCP1117 is rated for an output current of 1A (the LM1117 is rated for 800mA). The dropout voltage of the NCP1117 is a maximum of 1.2V at the rated output current (1.3V for the LM1117).

There is a reverse polarity protection diode in the external power supply circuit. Considering the diode drop plus the forward drop across the regulator, the minimum input voltage to the regulator should be 7V to produce a reliable 5V output. The absolute maximum input voltage of both the NCP1117 and the LM1117 is 20V. The recommended maximum operating voltage is 15V.

For input voltages above 9V, the regulator will get extremely hot when drawing high currents. Both the NCP1117 and the LM1117 have

Copyright Digilent, Inc. All rights reserved. Other product and company names mentioned may be trademarks of their respective owners.

output short circuit protection and internal thermal protection and will shut down automatically to prevent damage.

The 3.3V regulator is a Microchip MCP1725. This regulator is rated for a maximum output current of 500mA. The absolute maximum input voltage for the MCP1725 is 6V. This regulator has internal short circuit protection and thermal protection. It will get noticeably warm when the current consumed by the VCC3V3 bus is close to the 500mA maximum.

The 5V power bus, VCC5V0 can be powered from one of three sources:

- the USB5V0 bus when the board is operating under USB power,
- the output of the on-board 5V regulator when operating from an external 7V-15V supply,
- directly from the external supply when operating from a regulated 5V external supply with jumper JP2 in the BYP position.

Switch-over from USB power to external power is done automatically and the external supply will be used if both are present.

Jumper JP2 is used to route the external power supply voltage through the on-board 5V regulator or directly to the VCC5V0 bus, bypassing the on-board 5V regulator. Normally, JP2 is in the REG position. This routes the external supply through the 5V regulator. Operation from an externally regulated 5V supply is provided by placing the jumper in the BYP position.

The forward drop across the MCP1725 is typically 210mV (350mV max) at 500mA output. With JP2 in the BYP position, this will allow correct operation of the 3.3V power supply from an input voltage down to 3.5V. This lets you power the board from batteries and other lower voltage power sources. In that case, the VCC5V0 power bus will not be powered at 5V.

Note: When JP2 is in the BYP position, do not apply more than 6V to the external power input. This can destroy the 3.3V regulator and possibly the PIC32 microcontroller as well.

The PIC32 microcontroller is rated to use a maximum of 75mA of current when operating at 80Mhz. This allows up to 425mA from the VCC3V3 bus and up to 925mA from the VCC5V0 bus to power external devices.

The POWER connector, J2, is used to power shields connected to the uC32 board. The following pins are provided on this connector:

P32_RST (pin 1): This connects to the MCLR pin on the PIC32 microcontroller and can be used to reset the PIC32.

VCC3V3 (pin 2): This routes the 3.3V power bus to shields. This pin can provide ~425mA.

VCC5V0 (pin 3): This routes the 5V power bus to shields. This pin can provide up to ~900mA to shields, however the total provided by pins 2 and 3 shouldn't exceed 925mA.

GND (pin 4, 5): This provides a common ground connection between the uC32 and the shields.

VIN (pin 6): This connects to the voltage provided at the external power supply connector. This can be used to provide unregulated input power to the shield. It can also be used to power the uC32 board from the shield instead of from the external power connector.

5V Compatibility

The PIC32 microcontroller operates at 3.3V. The original Arduino boards operate at 5V as do many Arduino shields.

There are two issues to consider when dealing with 5V compatibility for 3.3V logic. The first is protection of 3.3V inputs from damage caused by 5V signals. The second is whether the 3.3V output is high enough to be recognized as a logic high value by a 5V input.

Copyright Digilent, Inc. All rights reserved. Other product and company names mentioned may be trademarks of their respective owners.

The digital I/O pins on the PIC32 microcontroller are 5V tolerant. The analog capable I/O pins are not 5V tolerant. To provide 5V tolerance on those pins, the uC32 contains clamp diodes and current limiting resistors to protect them from 5V input voltages.

The fact that all I/O pins are 5V tolerant means that it is safe to apply 5V logic levels to any pins on the board without risk of damaging the PIC32 microcontroller.

The minimum high-voltage output of the PIC32 microcontroller is rated at 2.4V when sourcing 12mA of current. When driving a high impedance input (typical of CMOS logic) the output high voltage will be close to 3.3V. Some 5V devices will recognize this voltage as a logic high input, and some won't. Many 5V logic devices will work reliably with 3.3V inputs.

Input/Output Connections

The uC32 board provides 42 of the I/O pins from the PIC32 microcontroller to pins on the input/output connectors J5, J6, and J7.

The PIC32 microcontroller can source or sink a maximum of 18mA on all digital I/O pins. However, to keep the output voltage within the specified voltage range (V_{OL} 0.4V, V_{OH} 2.4V) the pin current must be restricted to +7/-12mA. The maximum current that can be sourced or sunk across all I/O pins simultaneously is +/-200mA. The maximum voltage that can be applied to any I/O pin is 5.5V. For more detailed specifications, refer to the PIC32MX3XX/4XX Data Sheet available from the Microchip web site.

Connectors J5 and J6 are 2x8 female pin header connectors that provide digital I/O signals. The outer row of pins (closer to the board edge) corresponds to the I/O connector pins on an Arduino Uno or Duemilanove board. The inner row of pins provides access to the extra I/O signals provided by the PIC32 microcontroller.

Connector J7 is a 2x6 female pin header connector that provides access to the analog input pins on the microcontroller. The outer row of pins corresponds to the six analog pins on an Arduino Uno or Duemilanove. The inner row of pins are the additional I/O signals provided by the PIC32 microcontroller. The analog pins on J7 can also be used as digital I/O pins.

The chipKIT/Arduino system uses logical pin numbers to identify digital I/O pins on the connectors. The logical pin numbers for the I/O pins on the uC32 are 0-43. These pin numbers are labeled in the silk screen on the board.

Pin numbers 0-13 are the outer row of pins on J6 and J5, from right to left. Pin numbers 14-19 are the outer row of pins on J7 from left to right. Pins 20-25 are the inner row of pins on J7 from left to right. Pin numbers 26-41 are the inner row of pins on J6 and J5 from right to left. Pin 42 is the pin labeled A on J5. This pin is normally the reference voltage for the microcontroller's A/D converter, but can also be used as a digital I/O pin.

In addition to the connector pin, Pin 13 also connects to the user LED LD4. Pin 43 connects to user LED LD5. Pin 43 pin does not go to any connector.

The analog inputs on connector J7 are assigned pin numbers. The outer row of pins on J7 are analog inputs A0-A5. The inner row of pins are A6-A11. These pins are also assigned digital pin numbers: A0-A5 are digital pins 14-19, and A6-A11 are 20-25.

Peripheral I/O Functions

The PIC32 microcontroller on the uC32 board provides a number of peripheral functions. The following peripherals are provided:

UART port 1: Asynchronous serial port. Pin 0 (RX), Pin 1 (TX). These pins are connected to I/O connector J6 and are also connected to the FT232R USB serial converter. It is possible to use these pins to connect to an external serial device when not using the USB serial

Copyright Digilent, Inc. All rights reserved. Other product and company names mentioned may be trademarks of their respective owners.

interface. This uses UART1 (U1RX, U1TX) on the PIC32 microcontroller.

UART port 2: Asynchronous serial port. Pin 39 (RX), Pin 40 (TX). This uses UART2 (U2RX, U2TX) on the PIC32 microcontroller.

SPI: Synchronous serial port. Pin 10 (SS), Pin 11 (MOSI), Pin 12 (MISO), Pin 13 (SCK). This uses SPI2 (SS2, SDI2, SDO2, SCK2) on the PIC32 microcontroller These signals also appear on connector J8.

Jumpers JP5 and JP7 are used to select whether the uC32 operates as a Master (transmit on MOSI, receive on MISO) or a Slave (transmit on MISO, receive on MOSI) device. The shorting blocks on JP5 and JP7 are normally placed in the Master position for the uC32 to function as an SPI master.

Jumper JP4 is used to select PWM output or the SPI SS function on Pin 10. The shorting block on JP4 should be in the RD4 position to select PWM output. It should be in the RG9 position to select the SPI SS function.. JP4 will normally be in the RD4 position. In general, the only time it needs to be in the RG9 position is when the uC32 board is being used as an SPI slave device.

I^2C: Synchronous serial interface. The PIC32 microcontroller shares analog pins A4 and A5 with the two I^2C signals SDA and SCL. Jumpers JP6 and JP8 are used to select whether the analog pin functions or the I^2C pin functions are being used. The shorting blocks are placed in the A4/A5 position to select the analog input function or general digital I/O. They are placed in the RG3/RG2 position to use the pins for I^2C operation. This uses I2C1 (SDA1, SCL1) on the PIC32 microcontroller.

Note: The I^2C bus uses open collector drivers to allow multiple devices to drive the bus signals. This means that pull-up resistors must be provided to supply the logic high state for the signals. These pull-up resistors are not on the uC32 board and must be provided externally. The required resistance of the pull-up resistor to use depends on the total number of devices on the bus, the length of wire, and the clock speed being used. It essentially depends on distributed capacitance on the bus. The higher the distributed capacitance and the faster the clock speed, the smaller the resistance should be. Values typically used are in the range of 2K to 10K ohms.

PWM: Pulse width modulated output. Pins 3 (OC1), 5 (OC2), 6 (OC3), 9 (OC4), and 10 (OC5).

External Interrupts: Pin 38 (INT0), Pin 2 (INT1), Pin 7 (INT2), Pin 8 (INT3), Pin 35 (INT4)

User LEDs: Pin 13 (LD4), Pin 43 (LD5). Pin 13 is shared between a connector pin and the LED. Pin 43 only goes to the LED and not any connector pin. Driving the pin high turns the LED on, driving it low turns it off.

A/D Converter Reference: Labeled A, the left-most outer pin on connector J5. This is used to provide an external voltage reference to determine the input voltage range of the analog pins. The maximum voltage that can be applied to this pin is 3.3V. This pin can also be used as digital pin 42.

RTCC: Real Time Clock Calendar. The PIC32 microcontroller contains an RTCC circuit that can be used to maintain time and date information. The operation of the RTCC requires a 32.768Khz frequency source. Crystal X2 (not loaded), just above and to the right of the PIC32 microcontroller IC, is provided for you to solder a 32Khz watch crystal. The Citizen CFS206-32.768KDZF-UB crystal can be used in this location.

RESET: The PIC32 microcontroller is reset by bringing its MCLR pin low. The MCLR pin is connected to the P32_RST net on the circuit board.

As described earlier, reset of the PIC32 microcontroller can be initiated by the USB serial converter. The USB serial converter

Copyright Digilent, Inc. All rights reserved. Other product and company names mentioned may be trademarks of their respective owners.

brings the DTR pin low to reset the microcontroller. Jumper JP1 can be used to enable/disable the ability for the USB serial converter to initiate a reset.

The P32_RST net is connected to pin 1 of connector J2. This allows circuitry on a shield to reset the microcontroller, or to ensure that the circuitry on the shield is reset at the same time as the microcontroller.

Connector J8 provides access to the SPI bus. Pin 5 provides access to the SPI Slave Select signal (SS).

On Arduino boards, the corresponding connector is also used as an in-system programming connector as well as providing access to some of the SPI signals. On Arduino boards, pin 5 of this connector is connected to the reset net.

Some Arduino shields, notably, the Ethernet shield, connect pin 5 to the reset net on pin 1 of connector J2. This causes the processor to be reset each time an attempt is made to access the SPI port. Jumper JP9 can be used to break the connection between J8 pin 5 and reset when using Arduino shields that make this connection. JP9 has a cut-able trace on the bottom of the board that can be cut to break the connection between SPI SS and reset. JP9 is not loaded at the factory. To restore the connection, solder a two pin header at the JP9 position and install a shorting block.

A reset button is at the upper left corner of the board. Pressing this button resets the PIC32 microcontroller.

Microchip Development Tool Compatibility

In addition to being used with the MPIDE, the uC32 board can be used as a more traditional microcontroller development board using Microchip Development Tools.

Unloaded connector JP3 on the left side of the board is used to connect to a Microchip development tool, such as the PICkit3™. The holes for JP3 are staggered so that a standard 100-mil spaced 6-pin header can be press fit to the board without the need to solder it in place. Any Microchip development tool that supports the PIC32 microcontroller family, and can be connected via the same 6-pin interface as the PICkit3, can be used.

Typically, a right-angle male connector is used in JP3 so that a PICkit3 can be attached coplanar with the uC32 board. If the connector is loaded from the top, the PICkit3 will be upright (button and LEDs visible). Alternatively, the connector can be loaded from the bottom. In this case, the PICkit3 will be upside down.

If JP3 is loaded from the top, the PICkit3 will interfere with the USB connector and the external power connector. A short six-wire cable can be used between the PICkit3 and the uC32. If JP3 is loaded from the bottom, the PICkit3 won't interfere with the USB and external power connectors.

The Digilent PICkit3 Programming Cable Kit includes all necessary connectors and a cable for connecting a PICkit3 to the uC32.

The Microchip MPLAB® IDE or the MPLAB® X IDE can be used to program and debug code running on the uC32 board. These programs can be downloaded from the Microchip web site.

Using the Microchip development tools to program the uC32 board will cause the boot loader to be erased. To use the board with the MPIDE again, it is necessary to program the boot loader back onto the board. The compiled boot loader image is available on the Digilent web site. The boot loader source code is available on request.

Copyright Digilent, Inc. All rights reserved. Other product and company names mentioned may be trademarks of their respective owners.

Pinout Tables

The following tables give the relationship between the chipKIT digital pin numbers, the connector pin numbers and the microcontroller pin numbers.

In the following tables, columns labeled chipKIT pin # refer to the digital pin number. This is the value that is passed to the pinMode(), digitalRead(), digitalWrite() and other functions to refer to the pin.

For most pins, this pin number will agree with the pin number labeled on the board. For the pins whose function can be switched using jumpers, the pin number labeled on the board is correct when the jumper is in the 'normal' position.

For example: The normal position for JP4 is the RD4 position. The digital pin number for the microcontroller signal RD4 is 10. With JP4 in the RD4 position, digital pin 10 is connected to the pin labeled 10 on the board. The alternate position for JP4 is the RG9 position. The digital pin number for the microcontroller signal RG9 is 44. With JP4 in the RG9 position, digital pin 44 is connected to the pin labeled 10 on the board, and digital pin 10 is not connected.

The pin labeled 10 on the board is connected to connector J5 pin 5. This is shown as J5-05 in the following tables. In the 'Pinout Table by Shield Connector Pin' table below, J5-05 is shown has being either chipKIT pin # 10 or 44. J5-04 is connected to chipKIT pin # 10 when JP4 is in the RD4 position and is connected to chipKIT pin # 44 when in the RG9 position.

Pinout Table by Logical Pin Number

chipKIT Pin #	Connector Pin #	PIC32 Pin #	PIC32 Signal	Notes
0	J6-01	34	U1RX/SDI1/RF2	
1	J6-03	33	U1TX/SDO1/RF3	
2	J6-05	42	IC1/RTCC/INT1/RD8	
3	J6-07	46	OC1/RD0	
4	J6-09	59	RF1	
5	J6-11	49	OC2/RD1	
6	J6-13	50	OC3/RD2	
7	J6-15	43	IC2/U1CTS/INT2/RD9	
8	J5-01	44	IC3/PMCS2/PMA15/INT3/RD10	
9	J5-03	51	OC4/RD3	
10	J5-05	52	PMWR/OC5/IC5/CN13/RD4	selected by JP4, also on J8-6
11	J5-07	6	SDO2/PMA3/CN10/RG8	selected by JP5, also on J8-1
12	J5-09	5	SDI2/PMA5/CN8/RG7	selected by JP7, also on J8-4
13	J5-11	4	SCK2/PMA5/CN8/RG6	also on J8-3, User LED LD4r
14/A0	J7-01	14	C2IN-/AN2/SS1/CN4/RB2	
15/A1	J7-03	12	C1IN-/AN4/CN6/RB4	
16/A2	J7-05	21	U2CTS/C1OUT/AN8/RB8	
17/A3	J7-07	23	TMS/CVREFOUT/PMA13/AN10/RB10	
18/A4	J7-09	27	TCK/PMA11/AN12/RB12	selected by JP6

Copyright Digilent, Inc. All rights reserved. Other product and company names mentioned may be trademarks of their respective owners.

chipKIT Pin #	Connector Pin #	PIC32 Pin #	PIC32 Signal	Notes
19/A5	J7-11	29	PMALH/PMA1/U2RTS/AN14/RB14	selected by JP8
20/A6	J7-02	13	C2IN+/AN3/CN5/RB3	
21/A7	J7-03	11	C1IN+/AN5/CN7/RB5	
22/A8	J7-06	22	PMA7/C2OUT/AN9/RB9	
23/A9	J7-08	24	TDO/PMA12/AN11/RB11	
24/A10	J7-10	28	TDI/PMA10/AN13/RB13	
25/A11	J7-12	30	PMALL/PMA0/AN15/OCFB/CN12/RB15	
26	J6-02	60	PMD0/RE0	
27	J6-04	61	PMD1/RE1	
28	J6-06	62	PMD2/RE2	
29	J6-08	63	PMD3/RE3	
30	J6-10	64	PMD4/RE4	
31	J6-12	1	PMD5/RE5	
32	J6-14	2	PMD6/RE6	
33	J6-16	3	PMD7/RE7	
34	J5-02	53	PMRD/CN14/RD5	
35	J5-04	45	IC4/PMCS1/PMA14/INT4/RD11	
36	J5-06	54	CN15/RD6	
37	J5-08	55	CN16/RD7	
38	J5-10	35	U1RTS/BCLK1/SCK1/INT0/RF6	
39	J5-12	31	PMA9/U2RX/SDA2/CN17/RF4	
40	J5-14	32	PMA8/U2TX/SCL2/CN18/RF5	
41	J5-16	15	PGC1/AN1/VREF-/CVREF-/CN3/RB1	
42	J5-15	16	PGED1/PMA6/AN0/VREF+/CVREF+/CN2/RB0	
43	N/A	58	RF0	User LED LD5
44	J5-05	8	PMA2/SS2/CN11/RG9	selected by JP4, also on J8-6
45	J7-09	36	SDA1/RG3	selected by JP6
46	J7-11	37	SCL1/RG2	selected by JP8

Copyright Digilent, Inc. All rights reserved. Other product and company names mentioned may be trademarks of their respective owners.

Pinout Table By Shield Connector Pin

Connector Pin #	chipKIT Pin #	PIC32 Pin #	PIC32 Signal	Notes
J5-01	8	44	IC3/PMCS2/PMA15/INT3/RD10	
J5-02	34	53	PMRD/CN14/RD5	
J5-03	9	51	OC4/RD3	
J5-04	35	45	IC4/PMCS1/PMA14/INT4/RD11	
J5-05	10 or 44	52 or 8	(PMWR/OC5/IC5/CN13/RD4) or (SS2/PMA2/CN11/RG9)	selected by JP4, also on J8-6
J5-06	36	54	CN15/RD6	
J5-07	11 or 12	6 or 5	(SDO2/PMA3/CN10/RG8) or (SDI2/PMA5/CN8/RG7)	selected by JP5, also on J8-1
J5-08	37	55	CN16/RD7	
J5-09	12 or 11	5 or 6	(SDI2/PMA5/CN8/RG7) or (SDO2/PMA3/CN10/RG8)	selected by JP7, also on J8-4
J5-10	38	35	U1RTS/BCLK1/SCK1/INT0/RF6	
J5-11	13	4	SCK2/PMA5/CN8/RG6	also on J8-3, user LED LD4
J5-12	39	31	PMA9/U2RX/SDA2/CN17/RF4	
J5-13			GND	
J5-14	40	32	PMA8/U2TX/SCL2/CN18/RF5	
J5-15	42	16	PGED1/PMA6/AN0/VREF+/CVREF+/CN2/RB0	
J5-16	41	15	PGC1/AN1/VREF-/CVREF-/CN3/RB1	
J6-01	0	34	U1RX/SDI1/RF2	
J6-02	26	60	PMD0/RE0	
J6-03	1	33	U1TX/SDO1/RF3	
J6-04	27	61	PMD1/RE1	
J6-05	2	42	IC1/RTCC/INT1/RD8	
J6-06	28	62	PMD2/RE2	
J6-07	3	46	OC1/RD0	
J6-08	29	63	PMD3/RE3	
J6-09	4	59	RF1	
J6-10	30	64	PMD4/RE4	
J6-11	5	49	OC2/RD1	
J6-12	31	1	PMD5/RE5	
J6-13	6	50	OC3/RD2	
J6-14	32	2	PMD6/RE6	
J6-15	7	43	IC2/U1CTS/INT2/RD9	
J6-16	33	3	PMD7/RE7	
J7-01	A00/14	14	C2IN-/AN2/SS1/CN4/RB2	
J7-02	A06/20	13	C2IN+/AN3/CN5/RB3	
J7-03	A01/15	12	C1IN-/AN4/CN6/RB4	
J7-03	A07/21	11	C1IN+/AN5/CN7/RB5	
J7-05	A02/16	21	U2CTS/C1OUT/AN8/RB8	
J7-06	A08/22	22	PMA7/C2OUT/AN9/RB9	
J7-07	A03/17	23	TMS/CVREFOUT/PMA13/AN10/RB10	

Copyright Digilent, Inc. All rights reserved. Other product and company names mentioned may be trademarks of their respective owners.

Connector Pin #	chipKIT Pin #	PIC32 Pin #	PIC32 Signal	Notes
J7-08	A09/23	24	TDO/PMA12/AN11/RB11	
J7-09	A04/18 or 45	27 or 36	(TCK/PMA11/AN12/RB12) or (SDA1/RG3)	selected by JP6
J7-10	A10/24	28	TDI/PMA10/AN13/RB13	
J7-11	A05/19 or 46	29 or 37	(PMALH/PMA1/U2RTS/AN14/RB14) or (SCL1/RG2)	selected by JP8
J7-12	A11/25	30	PMALL/PMA0/AN15/OCFB/CN12/RB15	

Copyright Digilent, Inc. All rights reserved. Other product and company names mentioned may be trademarks of their respective owners.

Pinout Table by PIC32 Microcontroller Pin

PIC32 Pin #	Connector Pin #	chipKIT Pin #	PIC32 Signal	Notes
1	J6-12	31	PMD5/RE5	
2	J6-14	32	PMD6/RE6	
3	J6-16	33	PMD7/RE7	
4	J5-11	13	SCK2/PMA5/CN8/RG6	also on J8-3, User LED LD4
5	J5-09 or J5-07	12	SDI2/PMA5/CN8/RG7	selected by JP7/JP5, also on J8-1
6	J5-07 or J5-09	11	SDO2/PMA3/CN10/RG8	selected by JP5/JP7, also on J8-4
7	JP3-01		MCLR	PIC32 reset, ICSP signal
8	J5-05	44	SS2/PMA2/CN11/RG9	selected by JP4, also on J8-6
9			VSS	
10			VDD	
11	J7-03	A07/21	C1IN+/AN5/CN7/RB5	
12	J7-03	A01/15	C1IN-/AN4/CN6/RB4	
13	J7-02	A06/20	C2IN+/AN3/CN5/RB3	
14	J7-01	A00/14	C2IN-/AN2/SS1/CN4/RB2	
15	J5-16	41	PGC1/AN1/VREF-/CVREF-/CN3/RB1	
16	J5-15	42	PGED1/PMA6/AN0/VREF+/CVREF+/CN2/RB0	
17	JP3-05		PGEC2/AN8/OCFARB6	ICSP signal
18	JP3-04		PGED2/AN7/RB7	ICSP signal
19			AVDD	
20			AVSS	
21	J7-05	A02/16	U2CTS/C1OUT/AN8/RB8	
22	J7-06	A08/22	PMA7/C2OUT/AN9/RB9	
23	J7-07	A03/17	TMS/CVREFOUT/PMA13/AN10/RB10	
24	J7-08	A09/23	TDO/PMA12/AN11/RB11	
25			VSS	
26			VDD	
27	J7-09	A04/18	TCK/PMA11/AN12/RB12	selected by JP6
28	J7-10	A10/24	TDI/PMA10/AN13/RB13	
29	J7-11	A05/19	PMALH/PMA1/U2RTS/AN14/RB14	selected by JP8
30	J7-12	A11/25	PMALL/PMA0/AN15/OCFB/CN12/RB15	
31	J5-12	39	PMA9/U2RX/SDA2/CN17/RF4	
32	J5-14	40	PMA8/U2TX/SCL2/CN18/RF5	
33	J6-03	1	U1TX/SDO1/RF3	
34	J6-01	0	U1RX/SDI1/RF2	
35	J5-10	38	U1RTS/BCLK1/SCK1/INT0/RF6	
36	J7-09	45	SDA1/RG3	selected by JP6
37	J7-11	46	SCL1/RG2	selected by JP8
38			VDD	
39			OSC1/CLKI/RC12	X1, system clock oscillator

Copyright Digilent, Inc. All rights reserved. Other product and company names mentioned may be trademarks of their respective owners.

PIC32 Pin #	Connector Pin #	chipKIT Pin #	PIC32 Signal	Notes
40			OSC2/CLKO/RC15	X1, system clock oscillator
41			VSS	
42	J6-05	2	IC1/RTCC/INT1/RD8	
43	J6-15	7	IC2/U1CTS/INT2/RD9	
44	J5-01	8	IC3/PMCS2/PMA15/INT3/RD10	
45	J5-04	35	IC4/PMCS1/PMA14/INT4/RD11	
46	J6-07	3	OC1/RD0	
47			SOSCI/CN1/RC13	X2, secondary oscillator
48			SOSCO/T1CK/CN0/RC14	X2, secondary oscillator
49	J6-11	5	OC2/RD1	
50	J6-13	6	OC3/RD2	
51	J5-03	9	OC4/RD3	
52	J5-05	10	PMWR/OC5/IC5/CN13/RD4	selected by JP4
53	J5-02	34	PMRD/CN14/RD5	
54	J5-06	36	CN15/RD6	
55	J5-08	37	CN16/RD7	
56			VCAP/VDDcore	
57			ENVREG	
58		43	RF0	User LED LD5
59	J6-09	4	RF1	
60	J6-02	26	PMD0/RE0	
61	J6-04	27	PMD1/RE1	
62	J6-06	28	PMD2/RE2	
63	J6-08	29	PMD3/RE3	
64	J6-10	30	PMD4/RE4	

Copyright Digilent, Inc. All rights reserved. Other product and company names mentioned may be trademarks of their respective owners.

SECTION 26 28 16
Main Service Disconnect

Troubleshooting

Problem: AFCI trips shortly after it has been turned on.	
Possible Cause	*Solution*
The arc-fault circuit interrupter is not wired properly. *(Yellow trip indicator will be visible)*	Check that the load power wire, panel neutral (pig-tail) wire and load neutral wire are properly connected.*
Overloaded circuit	If the yellow electronic trip indicator is not visible, there are probably too many devices plugged into the circuits and overloading the AFCI.
An arc-fault condition exists *(Yellow trip indicator will be visible)*	Turn off all branch circuit loads. If the AFCI trips with all loads off, de-energize load center, disconnect load side wire from the AFCI. If the AFCI does not trip with load side wires disconnected, check branch circuit wiring for an arcing condition. If the AFCI does not trip with all loads off, turn on one device at a time until the AFCI trips. Check the energized device for arc-fault.*

Problem: AFCI trips immediately after the AFCI or a connect device has been turned on.	
Possible Cause	*Solution*
The arc-fault circuit interrupter is not wired properly. *(Yellow trip indicator will be visible)*	Check that the load power wire, panel neutral (pig-tail) wire and load neutral wire are properly connected.
Overloaded circuit	There are probably too many devices plugged into the circuits and overloading the AFCI.*
Short circuit	If the AFCI trips when a device is turned on, remove the device from the circuit and turn the AFCI on. If the AFCI does not trip this would indicate a short in the device.*
AFCI does not have a dedicated neutral *(Yellow trip indicator will be visible)*	Check wiring to ensure that there are no shared neutral connections.
A ground-fault condition exists *(Yellow trip indicator will be visible)*	A quick way to check for ground-fault conditions is to substitute a GFCI circuit breaker in place of the AFCI. If the GFCI trips, then you have a ground-fault condition. A common ground-fault is a grounded neutral. This occurs when the neutral conductor contacts a grounded conductor, so check your junction box and fixture connections.
An arc-fault condition exists *(Yellow trip indictor will be visible)*	Turn off all branch circuit loads. If the AFCI trips with all loads off, de-energize the load center, disconnect load side wire from the AFCI. If the AFCI does not trip with load side wires disconnected, check branch circuit wiring for an arcing condition. If the AFCI does not trip with all loads off, turn on one device at a time until the AFCI trips. Check the energized device for arc-fault.*

* A qualified electrician should make the repairs.

Replace AFCI circuit breaker, if these solutions do not work.

- *Electronic Trip Indicator*
  A yellow flag will display in the window next to the circuit breaker handle to indicate that the Siemens AFCI tripped due to a fault condition. If the circuit breaker trips due to an overload or short circuit condition, the flag will not be visible. This feature is sure to reduce troubleshooting time for the contractor.
- *Shorter Housing*
  The AFCI housing has been shortened by 3/4" for easy installation access to the panel neutral bar.
- *Neutral and Load Terminal Identification*
  The new Siemens AFCI uses a yellow chromate (gold) slotted Robertson screw for the load terminal, and a clear chromate (silver) slotted screw for the neutral terminal.

Siemens Energy & Automation, Inc.
3333 Old Milton Parkway
Alpharetta, GA 30005

1-800-964-4114
seainfo@sea.siemens.com

www.sea.siemens.com/reselec

©2003 Siemens Energy & Automation, Inc.
All Rights Reserved.

Siemens is a registered trademark of Siemens AG. Product names mentioned may be trademarks or registered trademarks of their respective companies. Specifications are subject to change without notice.

SEA Order No. RPPM-S0001-0903 (Supersedes RPPM-S0001-0202)
10M0903SP Printed in USA

Reduce the risk of an electrical fire in your home with arc-fault circuit interrupters

SIEMENS

Global network of innovation

What Is An Arc-Fault?

An arc-fault is an unintentional discharge of electricity in a circuit. Arcing exists in two basic varieties:

- *natural, or normal occurring arcing*
  occur when a light is switched on or a vacuum cleaner or any motor driven appliance is turned on, and
- *unsafe arc-faults*
  occur either as series or parallel faults in wire, electrical devices or connected loads

Arcing faults, which can and generally do go undetected, can reach extraordinarily high temperatures–upwards of 9,000 degrees Fahrenheit. The heating of surrounding materials creates a carbon remnant that acts as a high impedance conductor. As the carbon path extends, the by-products of the arc increase the available fuel source, magnifying the likelihood of a fire.

> *Problems in home wiring, like arcing and sparking, are associated with more than 40,000 home fires each year. These fires claim over 350 lives and injure 1,400 victims annually.*
> *Consumer Product Safety Review, Volume 4, Summer 1999*

What Causes An Arc-Fault?

Arc-faults may occur anywhere in the home's electrical system as a result of:

- Worn electrical insulation or damaged wire
- Misapplied or damaged plug-in appliance cords and equipment
- Loose electrical connections
- Accidentally piercing electrical cable behind drywalls with drill bit, nail or screw
- Hammering electrical cable staples too tightly into studs during rough wiring
- Natural aging and cord exposure to heat vents, sunlight, or foot traffic

There are many causes for arc-faults, and the results can be disastrous

What Are Arc-Fault Circuit Interrupters (AFCIs)?

When an unwanted arcing condition is detected, an AFCI de-energizes the circuit, and reduces the potential for a fire to occur.

Traditional circuit breakers are only intended to respond to overloads and short circuits. Ground-fault circuit interrupters (GFCIs) are an effective means of preventing severe electrical shock by detecting loss of current in a circuit, but do not protect against arcing conditions that produce erratic current flow. An AFCI provides a new level of protection not offered by either of these devices.

How Do AFCIs Work?

Siemens AFCIs employ electronic circuitry to continuously monitor the circuit and detect the unique characteristics of arcing. Arc-faults are identifiable by the interruption of current in a circuit. This interruption will be displayed as "shoulders" in the current waveform.

Characteristics Of Arcing Current

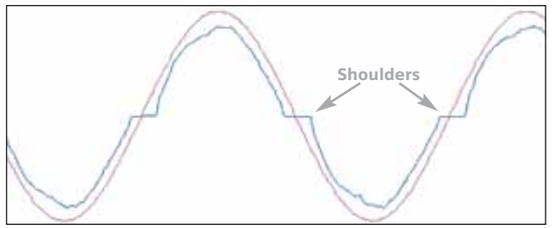

Normal Current *Arcing Condition*

Arcing often occurs intermittently in each half cycle of the voltage waveform. The complex arcing event causes sputtering arcs that vary the current from normal load patterns.

Sputtering Arc From Cut Electrical Cord

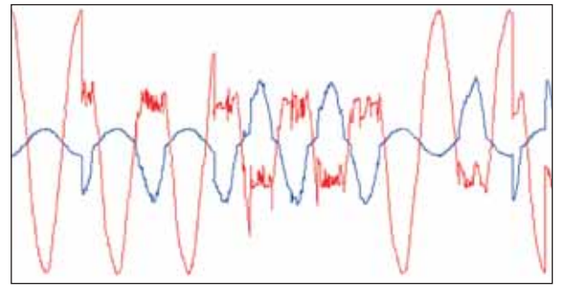

Voltage *Current*

What About Nuisance Tripping?

Connected loads, such as fluorescent lighting, motors, dimmers and switches, may have inherent arcing as a normal mode of operation. The Siemens AFCI is designed to distinguish these arcing faults from hazardous arcing faults by monitoring the intensity, duration, and frequency of the arcing fault.

Vacuum Cleaner

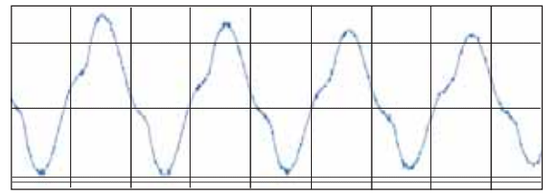

Dimmer

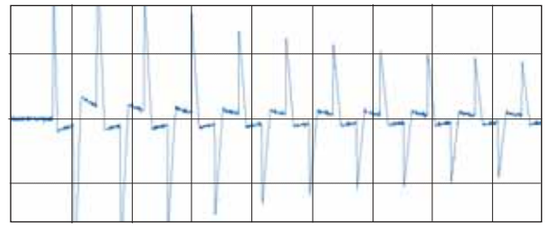

Siemens AFCIs have been tested with a wide variety of products, including fluorescent lights, hand drills, vacuum cleaners, hair dryers, dimmers, and other appliances containing electric motors to make sure they will not nuisance trip and the loads do not mask the presence of an arc.

NEC Requirements

Requirements of the 1999 National Electrical Code® Article 210-12 (B):

> *"Dwelling Unit Bedrooms. All branch circuits that supply 125 volt, single phase, 15 and 20 ampere receptacle outlets installed in dwelling unit bedrooms shall be protected by an arc-fault circuit interrupter(s)."*

Requirements of the 2002 National Electrical Code® Article 210-12 (B):

> *"Dwelling Unit Bedrooms. All branch circuits that supply 125 volt, single phase, 15 and 20 ampere receptacle outlets installed in dwelling unit bedrooms shall be protected by an arc-fault circuit interrupter listed to provide protection of the entire branch circuit."*

Analysis of the change–extends arc-fault circuit interrupter protection to all outlets in dwelling bedrooms, as well as requiring protection of the entire branch circuit.

Check with your local authority to confirm requirements in your area.

Technical Specifications

Siemens AFCI circuit breakers are UL listed per Standard 1699 and meet the requirements of the National Electrical Code Section 210-12. These devices provide the normal overload and short circuit protection that all circuit breakers provide and in addition they provide the added protection against arc faults.

Other Applications

You should also consider adding AFCI protection to existing homes. Older homes with standard circuit breakers may benefit from the added detection of arcing that can occur in aging electrical systems. Siemens AFCI circuit breakers easily replace any single pole 15 or 20 amp circuit breaker in the load center.

Selection Information

1-Pole, 120V AC, 60 Hz

Ampere Rating	Catalog Number	AIC	Std. Master Ctn. Qty.	Std. Master Ctn. Wt.	Wire Range
Plug-In AFCIs					
15	**Q115AF**	10K	1/10	.5/15	#14-#8
15	**Q115AFH**	22K	1/10	.5/15	#14-#8
20	**Q120AF**	10K	1/10	.5/15	#14-#8
20	**Q120AFH**	22K	1/10	.5/15	#14-#8

® NEC and National Electrical Code are registered trademarks of the National Fire Protection Association.

INSTRUCTIONS FOR INSTALLATION OF THE COMBINATION ARC FAULT CIRCUIT INTERRUPTER (AFCI) & CIRCUIT BREAKER	INSTRUCTIONS POUR L'INSTALLATION DE L'INTERRUPTEUR DE CIRCUIT DE DÉFAUT D'ARC (ICDA) INTÉGRÉ À UN DISJONCTEUR	INSTRUCCIONES PARA LA INSTALACIÓN DEL INTERRUPTOR DE CIRCUITOS POR FALLA DE ARCO (AFCI) Y CORTACIRCUITO
⚠ DANGER	**⚠ DANGER**	**⚠ PELIGRO**
Hazardous voltage. Will cause death or serious injury. Turn off and lock out power supplying equipment before installing AFCI.	**Tension dangereuse. Peut causer la mort ou des blessures graves.** Couper et verrouiller l'alimentation de l'équipement avant d'installer l'ICDA.	**Voltage peligroso. Causará la muerte o lesiones graves.** Apague y corte la fuente de corriente al equipo antes de instalar el AFCI.

SAFETY INSTRUCTIONS	INSTRUCTIONS DE SÉCURITÉ	INSTRUCCIONES DE SEGURIDAD
1. AFCI circuit breakers must be installed and serviced by a qualified electrician only. 2. To be installed only on a single phase 120VAC grounded system. 3. To prevent severe shock or electrocution, always turn the power off before working on or inside equipment. 4. Replace all doors and covers before turning on power to this equipment.	1. Les disjoncteurs ICDA doivent être installés et réparés par un électricien qualifié uniquement. 2. L'installation doit être faite exclusivement sur un système mis à la terre de 120 V CA monophasé. 3. Pour éviter les chocs électriques et l'électrocution, toujours couper l'alimentation électrique avant de travailler sur ou dans l'équipement. 4. Replacer toutes les portes et les couvercles avant de remettre cet équipement sous tension.	1. Los cortacircuitos AFCI deben ser instalados y reparados únicamente por electricistas calificados. 2. Debe instalarse únicamente en un sistema monofásico de 120 V CA con conexión a tierra. 3. Para evitar electrocución o choque eléctrico severo, siempre apague y cierre la corriente antes de trabajar sobre o dentro del equipo. 4. Reponga todas las puertas y cubiertas antes de encender la corriente a este equipo.

⚠ CAUTION	⚠ PRUDENCE	⚠ PRECAUCIÓN
Hazard of Equipment Damage. Will cause Damage to the AFCI Module. Do not reverse-feed or back-wire. Do not subject to megger, high voltage, or hi-pot test. Remove the breaker before high-potting occurs on the system or on the circuit.	**Dangers de dommages à l'équipement. Risque de dommages au module ICDA.** Ne pas inverser les connexions. Ne pas soumettre à un mégohmmètre, à une tension élevée ou à un essai diélectrique. Retirer le disjoncteur avant de soumettre le système ou le circuit à un essai diélectrique.	**Peligro de daño al equipo. Dañará el módulo AFCI.** No retroalimente ni conecte por el lado opuesto. No someta el equipo a ensayos de megóhmetro, alto votage, o alta tensión. Quite el cortacircuitos antes de que ocurra alta tensión eléctrica en el sistema o el circuito.

Siemens Industry, Inc.
Norcross, GA
© 2010 Siemens Industry, Inc. All Rights Reserved.
Pt No. 809072A Rev. 3P

Figure 1

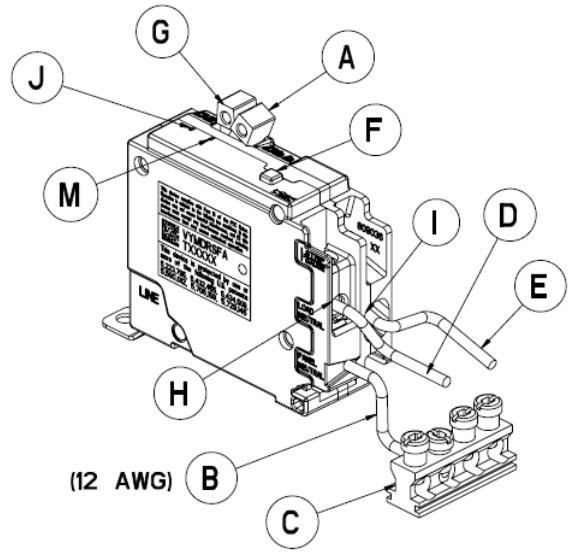

INSTALLATION INSTRUCTIONS

See Figure 1

1. Turn "OFF" and lock out the power to the equipment in which the AFCI is to be installed.
2. Move the handle of the breaker (A) to the "OFF" position.
3. Engage the back of the AFCI with the mounting tabs in the panelboard. For the plug in type, push down firmly on the front end to engage the line terminal stab. For the bolt in type, securely fasten the line terminal to the panelboard load bus.
4. Connect the panelboard neutral (pig-tail) (B) wire to a load center or panel neutral bar (C) as shown in the Fig.1. Torque per specifications on wiring diagram or equipment label.
5. Strip insulation off load wires to a length of 3/8 in.
6. Connect load neutral wire (D) into terminal (H) and load power wire (E) to terminal (I) as shown in Fig.1.

   Ensure that wire connectors are properly torqued to 25 lb in.

TESTING INSTRUCTIONS

1. Turn on power to load center or panelboard.
2. Turn "ON" the AFCI handle.
3. Press blue test button (F) as shown in Fig.1.

The AFCI breaker is functioning properly when:

1. The circuit is interrupted.
2. The handle moves to the tripped center position (G) as shown in Fig.1.

LEDs (J,M) are used to indicate the last know trip condition.

TROUBLESHOOTING

Problem: ***AFCI does not trip after pressing the test button.***	
Possible Cause	***Solution***
Panelboard is not energized	Check to ensure that the panelboard is energized.
The circuit breaker handle is in the "OFF" position	The circuit breaker handle must be in the "ON" position.
The circuit breaker is in the tripped position	Reset the circuit breaker by switching the handle to the "OFF" position and then to the "ON" position.
Panel neutral (pigtail) is not connected to the neutral bus bar	Check that the load power wire, panel neutral (pig- tail) wire and load neutral wire are properly connected.

Problem: ***AFCI trips immediately after the AFCI or a connected device has been turned on.***	
Possible Cause	***Solution***
The arc-fault circuit interrupter is not wired properly.	Check that the load power wire, panel neutral (pig- tail) wire and load neutral wire are properly connected. A qualified electrician should make the repairs.
Short-circuit	If the AFCI trips when a device is turned on, remove the device from the circuit and turn the AFCI on. If the AFCI does not trip this would indicate a short in the device. A qualified electrician should make the repairs.
AFCI does not have a dedicated neutral	Check wiring to ensure that there are no shared neutral connections.
AFCI does not have the correct neutral	Check wiring to ensure the load power wire and load neutral wire are from the same branch circuit
A ground-fault condition exists	A quick way to check for ground-fault conditions is to substitute a GFCI circuit breaker in place of the AFCI. If the GFCI trips, then you have a ground-fault condition. A common ground fault is a grounded neutral, which may only cause a trip under load. This occurs when the neutral conductor contacts a grounded conductor, so check your junction box and fixture connections.
An arc-fault condition exists	Reset the circuit breaker by switching the handle to the "OFF" position and then to the "ON" position. If the AFCI trips again, call a qualified electrician to make the repairs.

Problem: ***AFCI trips after it has been turned on, but not immediately***	
Possible Cause	***Solution***
The arc-fault circuit interrupter is not wired properly.	Check that the load power wire, panel neutral (pig- tail) wire and load neutral wire are properly connected. A qualified electrician should make the repairs.
Overloaded circuit	There are probably too many devices plugged into the circuits and overloading the AFCI.
An arc-fault condition exists	Reset the circuit breaker by switching the handle to the "OFF" position and then to the "ON" position. If the AFCI trips again, call a qualified electrician to make the repairs.

If solutions do not work, the AFCI circuit breaker must be replaced.

AFCI will need to be replaced if the following conditions are displayed by the yellow LEDs

LED (J): Blinking
LED(M): Blinking

LED Indication Guide (after recent trip has occurred)

Turn AFCI to "ON" position
Observe LED indications and compare to chart at right:

LED indications will appear for 5 seconds each time the AFCI is turned "ON"
Display will appear each time the AFCI is reset up to 30 days after last trip.

The last known trip condition can be cleared by the following process:

1. Turn the AFCI to the "OFF" position.
2. Press and hold the PTT button.
3. Turn the AFCI to the "ON" position.
4. Release the PTT button within 3 seconds.

LED INDICATOR		LAST KNOWN TRIP CONDITION
LED (J)	LED (M)	
OFF	OFF	OVERCURRENT
ON	OFF	ARC FAULT
ON	ON	ARC FAULT TO GROUND

© 2010 Siemens Industry, Inc. All Rights Reserved.

Figure 1

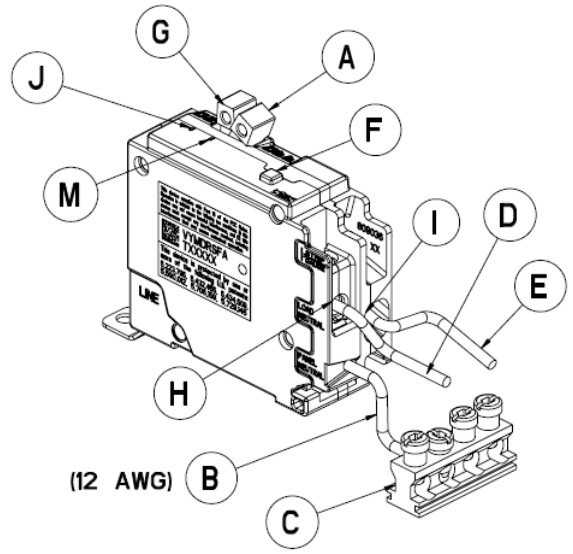

INSTRUCTIONS D'INSTALLATION

Voir la Figure 1

1. Couper et verrouiller l'alimentation vers l'équipement sur lequel l'ICDA doit être installé.
2. Mettre la manette du disjoncteur (A) sur la position Arrêt.
3. Enclencher le dos de l'ICDA sur les languettes de montage du tableau de contrôle. Pour le type enfichable, pousser fermement sur l'extrémité avant pour engager la lame d'alimentation. Pour le type vissable, bien fixer la borne d'alimentation au bus de charge du tableau de contrôle.
4. Brancher le fil neutre destiné au panneau de contrôle (en queue de cochon) (B) sur une barre de neutre (C) du panneau de contrôle ou du tableau de répartition comme illustré à la Fig. 1. Serrer aux spécifications indiquées sur le schéma de câblage ou sur l'étiquette de l'équipement.
5. Dénuder les fils d'alimentation sur 10 mm (3/8 po).
6. Brancher le fil de neutre du circuit (D) sur la borne (H) et le fil de phase (E) sur la borne (I) comme illustré à la Fig. 1.

S'assurer que les bornes sont bien serrées à 2,8 N.m (25 livres-po).

INSTRUCTIONS DE TEST

1. Mettre le tableau de répartition ou le tableau de contrôle sous tension.
2. Mettre la manette de l'ICDA sur Marche.
3. Appuyer sur le bouton de test bleu (F) comme illustré à la Fig. 1.

L'ICDA fonctionne correctement si :

1. Le circuit est interrompu.
2. La manette se déplace à la position centrale déclenchée (G) comme illustré à la Fig. 1.

Les DELs (J,M) indiquent la dernière cause de déclenchement connue.

DÉPANNAGE

Problème : *L'ICDA ne se déclenche pas après que le bouton de test a été activé.*

Cause possible	*Solution*
Le tableau de contrôle n'est pas sous tension.	Vérifier que le tableau de contrôle est sous tension.
La manette du disjoncteur est sur Arrêt.	La manette du disjoncteur doit être sur Marche.
La manette du disjoncteur est en position déclenchée.	Réarmer le disjoncteur en mettant la manette sur Arrêt puis sur Marche.
Le fil neutre (en queue de cochon) destine au tableau n'est pas branché sur une barre de neutre.	Vérifier que le fil de phase, le fil de neutre (en queue de cochon) raccordé au tableau et le fil de neutre du circuit sont bien branchés.

Problème : *L'ICDA se déclenche immédiatement après la mise sous tension de l'ICDA ou d'un appareil connecté.*

Cause possible	*Solution*
L'ICDA n'est pas correctement branché.	Vérifier que le fil de phase, le fil de neutre (en queue de cochon) raccordé au tableau et le fil de neutre du circuit sont bien branchés. Confier les réparations à un électricien qualifié.
Court-circuit	Si l'ICDA se déclenche lorsqu'un appareil est mis sous tension, retirer l'appareil du circuit et mettre l'ICDA sur marche. Si l'ICDA ne se déclenche plus, ceci indique probablement un court-circuit dans l'appareil. Confier les réparations à un électricien qualifié.
L'ICDA n'est pas muni d'un fil neutre dédié.	Vérifier qu'aucune connexion de neutre n'est partagée.
L'ICDA n'est pas muni d'un fil neutre adéquat.	Vérifier que le fil de phase et le fil de neutre du circuit appartiennent effectivement au même circuit.
Il y a un défaut à la terre.	Une façon rapide de vérifier s'il y a un défaut à la terre consiste à remplacer l'ICDA par un disjoncteur de fuite à la terre. S'il se déclenche, il y a un défaut à la terre. Une cause fréquente de défaut à la terre provient d'un fil de neutre raccordé à la terre qui ne cause parfois le déclenchement que sous charge. Ceci a lieu lorsque le conducteur de neutre touche un conducteur mis à la terre : vérifiez donc la boîte de jonction et les raccordements.
Il y un défaut d'arc.	Réarmer le disjoncteur en mettant la manette sur Arrêt puis sur Marche. Si l'ICDA se déclenche encore, contacter un électricien qualifié pour les réparations.

Problème : *L'ICDA se déclenche peu de temps après avoir été mis sous tension.*

Cause possible	*Solution*
L'ICDA n'est pas correctement branché.	Vérifier que le fil de phase, le fil de neutre (en queue de cochon) raccordé au tableau et le fil de neutre du circuit sont bien branchés. Confier les réparations à un électricien qualifié.
Circuit en surcharge	Il y a probablement trop d'appareils branchés dans les circuits et surchargeant l'ICDA.
Il y un défaut d'arc.	Réarmer le disjoncteur en mettant la manette sur Arrêt puis sur Marche. Si l'ICDA se déclenche encore, contacter un électricien qualifié pour les réparations.

Si les solutions ne fonctionnent pas, l'ICDA doit être remplacé.

L'ICDA doit être remplacé si les conditions suivantes sont indiquées par les DEL jaunes.

DEL (J) : Clignotante
DEL (M) : Clignotante

Guide des indications DEL (après un déclenchement récent)

Mettre l'ICDA sur marche.
Observer les indications des DEL et comparer avec le tableau à droite :
Les indications des DEL apparaissent pendant 5 secondes à chaque mise sous tension de l'ICDA.
L'affichage apparaît à chaque fois que l'ICDA est réinitialisé jusqu'à 30 jours après le dernier déclenchement.

La dernière condition de déclenchement connue peut être effacée par la méthode suivante :

1. Mettre l'ICDA sur Arrêt.
2. Appuyer sans relâcher le bouton de test.
3. Mettre l'ICDA sur Marche.
4. Relâcher le bouton de test dans les 3 secondes.

INDICATEUR DEL		DERNIÈRE CAUSE DE DÉCLENCHEMENT CONNUE
DEL (J)	DEL (M)	
ÉTEINTE	**ÉTEINTE**	**SURINTENSITÉ**
ALLUMÉE	**ÉTEINTE**	**DÉFAUT D'ARC**
ALLUMÉE	**ALLUMÉE**	**DÉFAUT D'ARC À LA TERRE**

Siemens Industry, Inc.
Norcross, GA
© 2010 Siemens Industry, Inc. All Rights Reserved.
Pt No. 809072A Rev. 3P

Figura 1

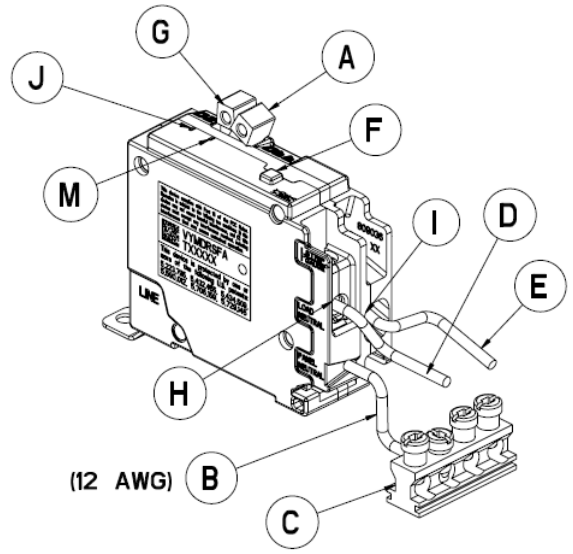

INSTRUCCIONES PARA LA INSTALACIÓN

Vea la Figura 1

1. Apague y corte la corriente al equipo en el cual se instalará el AFCI.
2. Mueva la manija del cortacircuito (A) hasta la posición “OFF” (apagado).
3. Con las lengüetas de montaje, trabe la parte posterior del AFCI en el panel de distribución. Para el modelo tipo enchufe, presione bien hacia abajo en el extremo delantero para trabar la inserción de la terminal de línea. Para el modelo tipo perno, asegure bien la terminal de línea al bus de carga del panel de distribución.
4. Conecte el cable neutro del panel de distribución (cable flexible de conexión) (B) a un centro de carga o a una barra neutra del panel (C), tal como se muestra en la Fig. 1. Ajuste según las especificaciones detalladas en el diagrama de cableado o en la etiqueta del equipo.
5. Quite el aislamiento de los cables de carga hasta una longitud de 3/8 de pulgada (9,5 mm).
6. Conecte el cable de carga neutro (D) a la terminal (H) y el cable de carga de corriente (E) a la terminal (I), tal como se muestra en la Fig. 1.

Asegúrese de que los conectores de cables estén ajustados correctamente con un par de torsión de 25 libras-pulgadas.

INSTRUCCIONES DE PRUEBA

1. Conecte la corriente al centro de carga o al panel de distribución.
2. Coloque la manija del AFCI en la posición “ON” (encendido).
3. Presione el botón de prueba azul (F), tal como se muestra en la Fig. 1.

El cortacircuito AFCI funciona correctamente cuando:

1. El circuito está interrumpido.
2. La manija se mueve hacia la posición central de disparo (G), tal como se muestra en la Fig. 1.

Indicadores LED (J,M) indican la condición de disparo mas reciente.

SOLUCIÓN DE PROBLEMAS

Problema: *el AFCI no se dispara después de presionar el botón de prueba.*

Causa posible	*Solución*
El panel de distribución no está activado	Verifique para asegurarse de que el panel de distribución esté activado.
La manija del cortacircuito está en la posición “OFF” (apagado)	La manija del cortacircuito debe estar en la posición “ON” (encendido).
El cortacircuito está en la posición de disparo	Reinicie el cortacircuito moviendo la manija hasta la posición “OFF” (apagado) y luego, hasta la posición “ON” (encendido).
El cable neutro del panel (cable flexible de conexión) no está conectado a la barra del bus neutro	Verifique que el cable de carga de corriente, el cable neutro del panel (cable flexible de conexión) y el cable de carga neutro estén conectados correctamente.

Problema: *el AFCI se dispara inmediatamente después de que se enciende el AFCI o un dispositivo conectado.*

Causa posible	*Solución*
El interruptor de circuitos por falla de arco no está correctamente cableado.	Verifique que el cable de carga de corriente, el cable neutro del panel (cable flexible de conexión) y el cable de carga neutro estén conectados correctamente. Un electricista calificado debería realizar las reparaciones.
Corto circuito	Si el AFCI se dispara cuando se enciende un dispositivo, retire el dispositivo del circuito y encienda el AFCI. Si el AFCI no se dispara, esto indicaría un corto circuito en el dispositivo. Un electricista calificado debería realizar las reparaciones.
El AFCI no cuenta con un conector neutro dedicado	Verifique el cableado para asegurarse de que no haya conexiones neutras compartidas.
El AFCI no cuenta con el conector neutro correcto	Verifique el cableado para asegurarse de que el cable de carga de corriente y el cable de carga neutro provengan del mismo circuito derivado
Existe una condición de falla a tierra	Una manera rápida de verificar si existen condiciones de falla a tierra consiste en sustituir el AFCI por un interruptor de circuitos por falla a tierra (GFCI). Si el GFCI se dispara, entonces existe una condición de falla a tierra. Una falla a tierra común es un conector neutro con conexión a tierra que posiblemente ocasiona únicamente un disparo bajo carga. Eso sucede cuando el conductor neutro hace contacto con un conductor con conexión a tierra; por lo tanto, verifique la caja de conexiones y las conexiones de los dispositivos.
Existe una condición de falla de arco	Reinicie el cortacircuito moviendo la manija hasta la posición “OFF” (apagado) y luego, hasta la posición “ON” (encendido). Si el AFCI se vuelve a disparar, comuníquese con un electricista calificado para que realice las reparaciones.

Problema: *el AFCI se dispara un instante después de ser encendido.*

Causa posible	*Solución*
El interruptor de circuitos por falla de arco no está correctamente cableado.	Verifique que el cable de carga de corriente, el cable neutro del panel (cable flexible de conexión) y el cable de carga neutro estén conectados correctamente. Un electricista calificado debería realizar las reparaciones.
Circuito sobrecargado	Es posible que haya demasiados dispositivos enchufados en los circuitos y estén sobrecargando el AFCI.
Existe una condición de falla de arco	Reinicie el cortacircuito moviendo la manija hasta la posición “OFF” (apagado) y luego, hasta la posición “ON” (encendido). Si el AFCI se vuelve a disparar, comuníquese con un electricista calificado para que realice las reparaciones.

Si estas soluciones no funcionan, se debe reemplazar el cortacircuito AFCI

El AFCI deberá reemplazarse si los indicadores LED amarillos muestran las siguientes condiciones

INDICADOR LED SUPERIOR (J): intermitente
INDICADOR LED INFERIOR (M): intermitente

Guía de indicaciones de los indicadores LED (después de que se produjo un disparo reciente)

Coloque el AFCI en la posición “ON” (encendido)
Observe las indicaciones de los indicadores LED y compare con el cuadro de la derecha:

Las indicaciones de los indicadores LED aparecerán durante 5 segundos cada vez que se encienda el AFCI.
La visualización aparecerá cada vez que se reinicie el AFCI hasta 30 días después del último disparo.

Se puede borrar la última condición de disparo conocida mediante el siguiente proceso:

1. Coloque el AFCI en la posición “OFF” (apagado).
2. Presione y mantenga presionado el botón PPT (Presionar para probar)
3. Coloque el AFCI en la posición “ON” (encendido).
4. Suelte el botón PPT para probar en 3 segundos.

INDICADOR LED		ÚLTIMA CONDICIÓN DE DISPARO CONOCIDA
Amarillo 1	**Amarillo 2**	
APAGADO	APAGADO	SOBRECORRIENTE
ENCENDIDO	APAGADO	FALLA DE ARCO
ENCENDIDO	ENCENDIDO	FALLA DE ARCO A TIERRA

Siemens Industry, Inc.
Norcross, GA
© 2010 Siemens Industry, Inc. All Rights Reserved.
Pt No. 809072A Rev. 3P

SECTION 26 33 13

Batteries

SystemEdge Pre-Bundled Packages

Review all items

SystemEdge pre-bundled packages combine OutBack's most popular FLEXpower models and energy storage configurations. Every SystemEdge package includes the following:

- FLEXpower Radian Integrated System (**A**), 8 kW or 4 kW
- FLEXware ICS combiner (**B**)
- EnergyCell batteries and housing (**C**, or **D** & **E**)
- Necessary connection hardware (not pictured)

  NOTE: Battery cables from FLEXpower Radian to battery bank are not included

A

B

One of several EnergyCell battery configurations may be used.

- If a SystemEdge was selected with EnergyCell 2200NC High Capacity batteries (**D**), these ship on two pallets with twelve 2-volt cells. This option requires proper removal from pallets and special lifting equipment for physical installation. The batteries come preassembled in a system-usable rack. No other enclosure is needed. Items **D** and **E** will not be present.
- If a SystemEdge was selected with eight EnergyCell 200RE or 200NC batteries (**D**), it also ships with a separate pallet containing an Integrated Battery Rack (**E**). This configuration uses the IBR-2 enclosure, which has two shelf racks. (The IBR-2 is different than that pictured in **E**.) Item **C** will not be present.
- If a SystemEdge was selected with twelve EnergyCell 200RE or 200NC batteries (not all pictured in **D**), it also ships with a separate pallet containing the IBR-3 (**E**). This enclosure has three shelf racks. Item **C** will not be present.

C

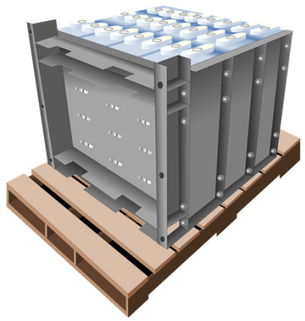

D

E

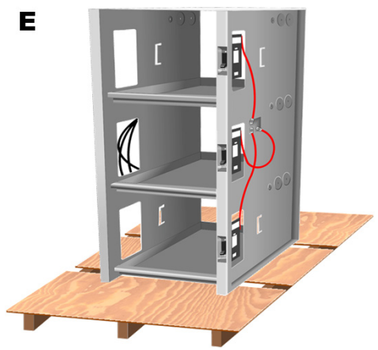

900-0196-01-00 REV A
©2016 OutBack Power Technologies. All Rights Reserved.

NOTES

Additional information is available at www.outbackpower.com regarding all products shown here. This document does not contain instructions for electrical connections. For detailed instructions, specifications, and other information, see the applicable product literature.

Unpack all items

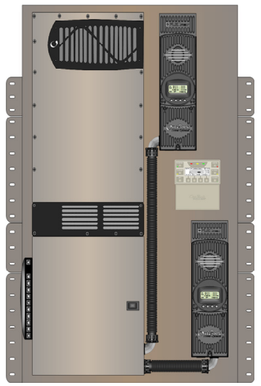

FLEXpower Radian

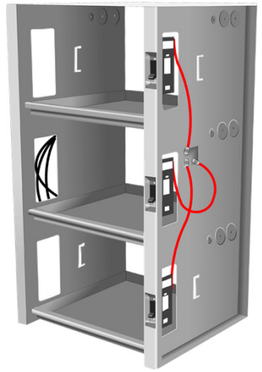

IBR-3 Enclosure

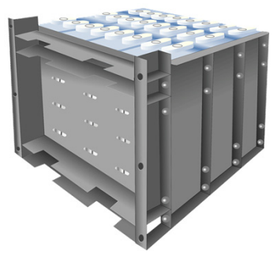

EnergyCell NC High Capacity Battery (rack included)

EnergyCell 200RE Battery

EnergyCell 200NC Battery

FLEXware ICS Combiner

WARNING: Personal Injury

The FLEXpower Radian weighs several hundred pounds (in excess of 80 kilograms). Individual batteries can exceed 130 pounds (59 kilograms). Use safe lifting techniques and standard safety equipment when working with this equipment.

IMPORTANT:

Clearance and access requirements may vary by location. Maintaining a 36" (91.4 cm) clear space in front of the system for access is recommended. *Consult local electric code to confirm clearance and access requirements for the specific location.*

IMPORTANT:
Not intended for use with life support equipment.

Initial Setup

Mount FLEXpower Radian

IMPORTANT

- Working gloves are strongly recommended when performing installation steps.
- Ensure the mounting surface is strong enough to handle 3 times the total weight of all components.

- Attach the wall bracket with all 6 mounting screws. Center the mounting holes on the wall studs.
- Lift the inverter bracket above the wall bracket. Lower the inverter so that the back plane flange slips into the wall bracket. Ensure the unit is centered on the wall bracket.
- Install the mounting screws. See illustration below* for preferred locations.

NOTE: See the *FLEXpower Radian Quick Start Guide* for more exact mounting instructions.

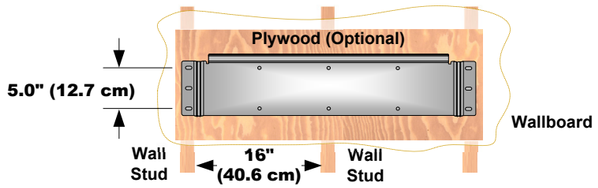

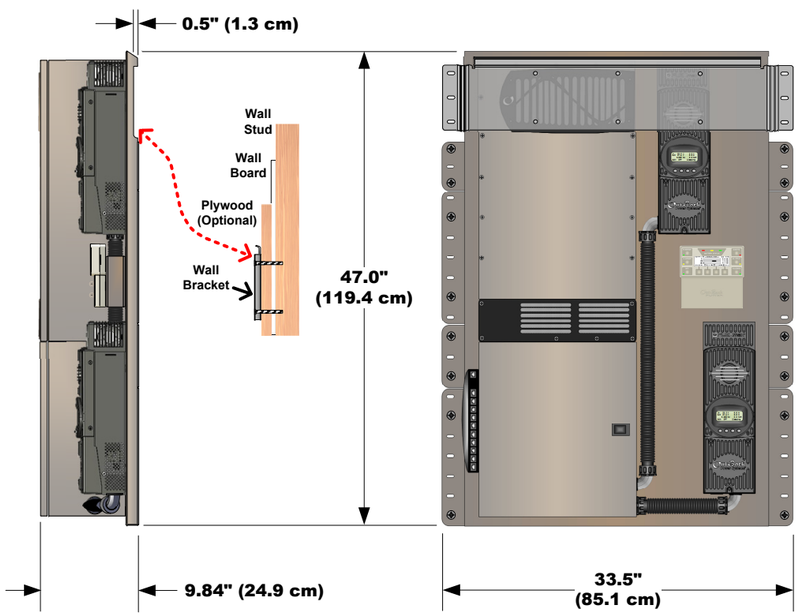

*Preferred screw locations are depicted in these spots

Load IBR (if present)

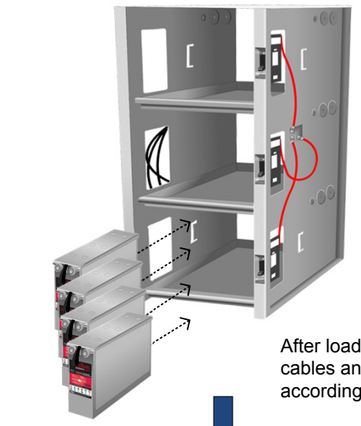

EnergyCell 200RE batteries

After loading, install all cables and interconnects according to instructions.

Positioning of FLEXpower Radian with IBR

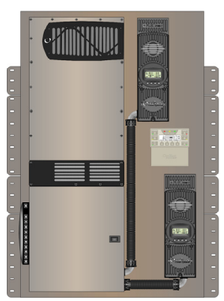

NOTE: The IBR may be installed beneath the FLEXpower Radian as shown. The EnergyCell 2200NC High Capacity system must be installed alongside due to height restrictions.

EnergyCell 200NC batteries

Make Connections

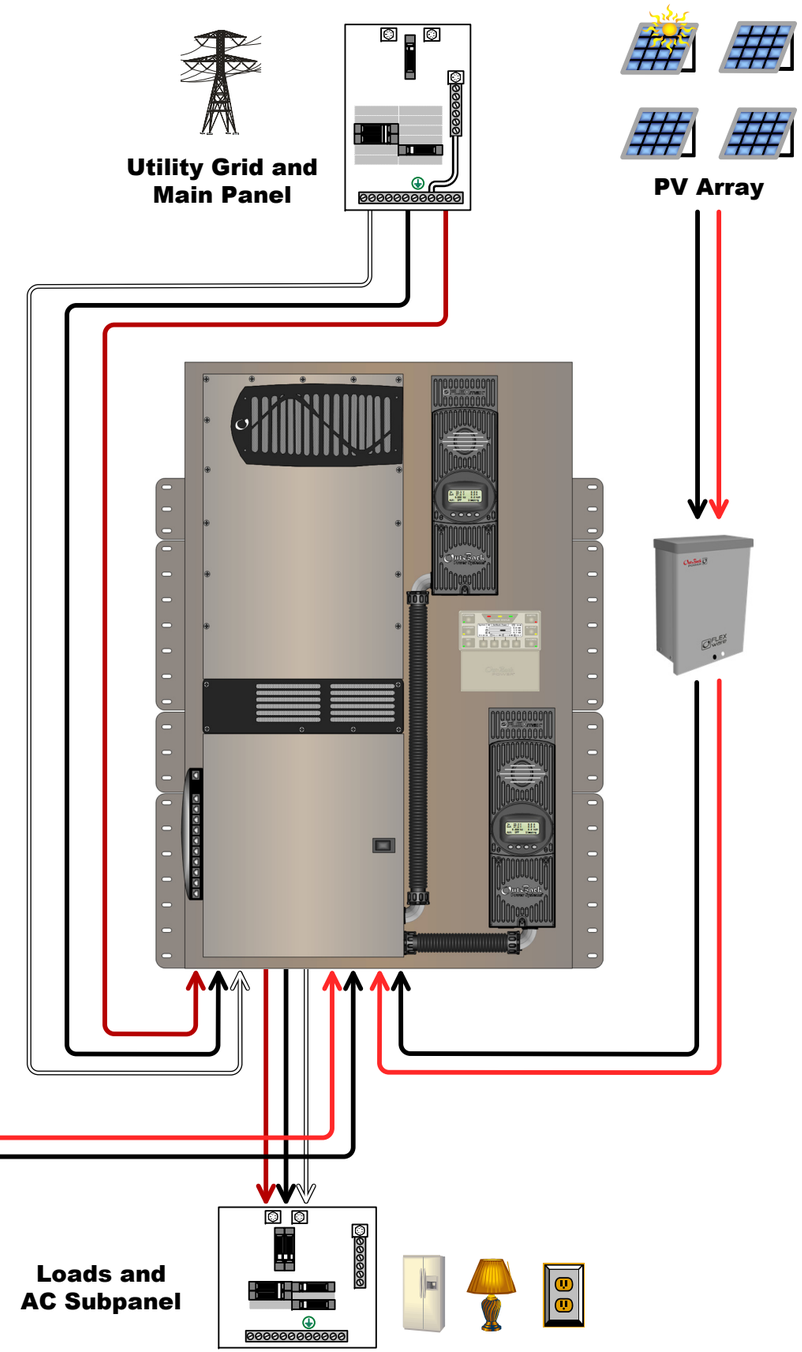

Contact Information

Telephone: +1.360.435.6030 (Main)
+1.360.618.4363 (Technical Support)
+1.360.435.6019 (Fax)

E-mail and Web Site: Support@outbackpower.com
www.outbackpower.com

Mailing Address:
Corporate Headquarters
17825 – 59th Avenue NE
Suite B
Arlington, WA 98223 USA

European Office
Hansastrasse 8
D-91126
Schwabach, Germany

Date and Revision

May 2016, Revision A

900-0196-01-00 REV A
©2016 OutBack Power Technologies. All Rights Reserved.

SECTION 27 21 16
Wireless Network Router

DATASHEET

UniFi® AC

802.11AC Dual-Radio Access Points

Models: UAP-AC-IW, UAP-AC-IW-PRO, UAP-AC-LITE, UAP-AC-LR, UAP-AC-PRO, UAP-AC-EDU

Unlimited Indoor/Outdoor AP Scalability in a Unified Management System

Breakthrough Speeds up to 1300 Mbps in the 5 GHz Band

Intuitive UniFi Controller Software

UBIQUITI® NETWORKS

Scalable Enterprise Wi-Fi Management

UniFi® is the revolutionary Wi-Fi system that combines enterprise performance, unlimited scalability, and a central management controller. UniFi 802.11AC Dual-Radio Access Points (APs) have a refined industrial design and can be easily installed using the included mounting hardware.

Easily accessible through any standard web browser, the UniFi Controller software is a powerful software engine ideal for high-density client deployments requiring low latency and high uptime performance.

Use the UniFi Controller software to quickly configure and administer an enterprise Wi-Fi network – no special training required. RF map and performance features, real-time status, automatic UAP device detection, and advanced security options are all seamlessly integrated.

Features

Save money and save time Unlike traditional enterprise Wi-Fi systems that use a hardware controller, UniFi comes bundled with a non-dedicated software controller that can be deployed on an on-site PC, Mac, or Linux machine; in a private cloud; or using a public cloud service.

Powerful Hardware The UniFi 802.11AC Dual-Radio APs feature the latest in Wi-Fi 802.11AC MIMO technology.

Intuitive UniFi Controller Software Configure and manage your APs with the easy-to-learn user interface.

Expandable Unlimited scalability: build wireless networks as big or small as needed. Start with one (or upgrade to a three-pack) and expand to thousands while maintaining a single unified management system.

Extend Your Coverage

With the UniFi Controller software running in a NOC or in the cloud, administrators can manage multiple sites: multiple, distributed deployments and multi-tenancy for managed service providers. Below are some deployment examples.

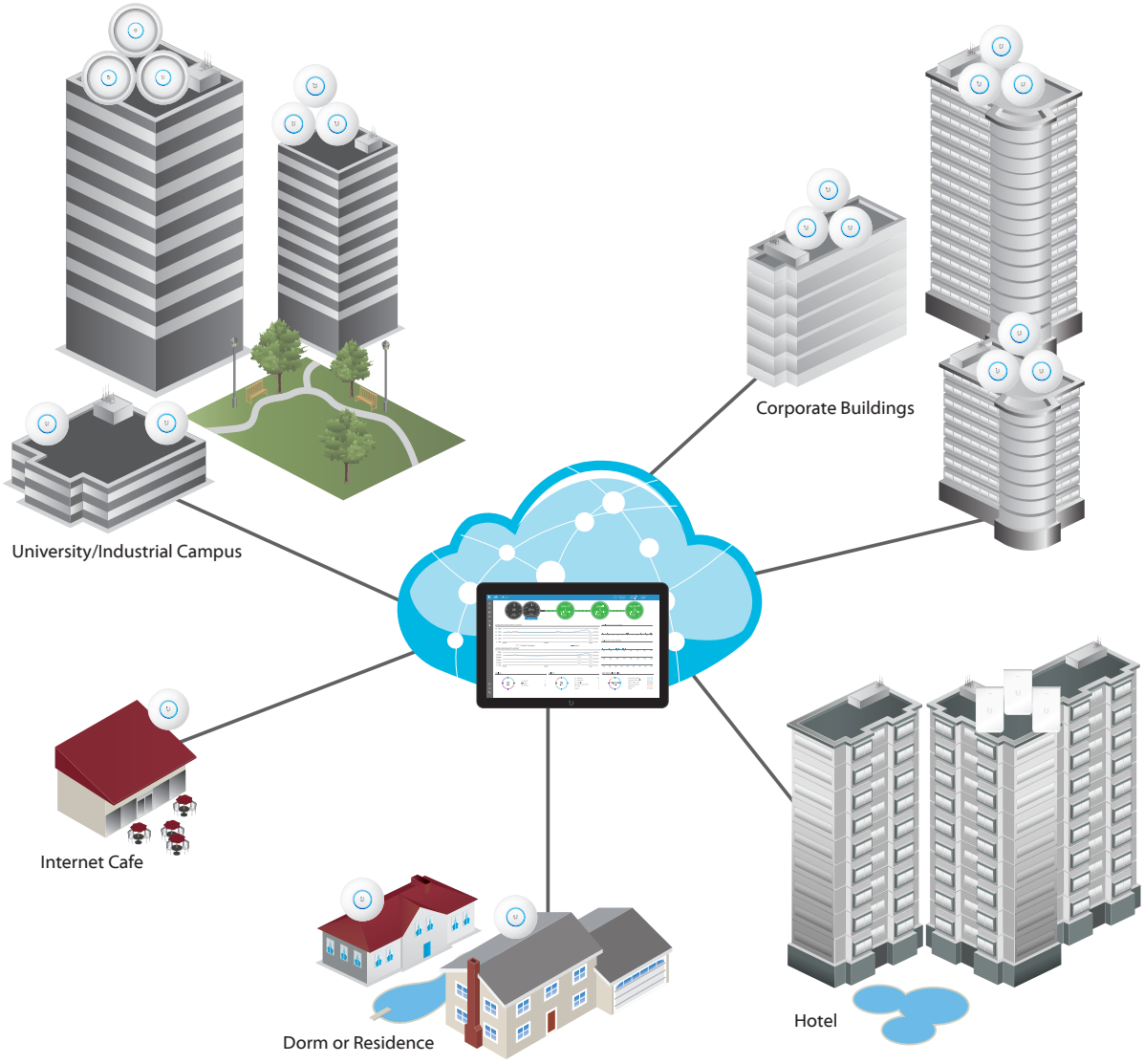

UniFi Controller

Packed with Features

Use the UniFi Controller to provision thousands of UniFi APs, map out networks, quickly manage system traffic, and provision additional UniFi APs.

Breakthrough RF Map

Use the RF map to monitor and analyze radio frequencies for optimal AP placement, configuration, and troubleshooting.

Powerful RF Performance Features

Advanced RF performance and configuration features include spectral analysis, airtime fairness, and band steering.

Detailed Analytics

Use the configurable reporting and analytics to manage large user populations and expedite troubleshooting.

Wireless Uplink

Wireless Uplink functionality enables wireless connectivity between APs for extended range. One wired UniFi AP uplink supports up to four wireless downlinks on a single operating band, allowing wireless adoption of devices in their default state and real-time changes to network topology.

Guest Portal/Hotspot Support

Easy customization and options for Guest Portals include authentication, Hotspot setup, and the ability to use your own external portal server. Use UniFi's rate limiting for your Guest Portal/Hotspot package offerings. Apply different bandwidth rates (download/upload), limit total data usage, and limit duration of use.

All UniFi APs include Hotspot functionality:

- Built-in support for billing integration using major credit cards.
- Built-in support for voucher-based authentication.
- Built-in Hotspot Manager for voucher creation, guest management, and payment refund.
- Full customization and branding of Hotspot portal pages.

Multi-Site Management

A single UniFi Controller running in the cloud can manage multiple sites: multiple, distributed deployments and multi-tenancy for managed service providers. Each site is logically separated and has its own configuration, maps, statistics, guest portal, and administrator read/write and read-only accounts.

WLAN Groups

The UniFi Controller can manage flexible configurations of large deployments. Create multiple WLAN groups and assign them to an AP's radio.

Dashboard

UniFi provides a visual representation of your network's status and delivers basic information about each network segment.

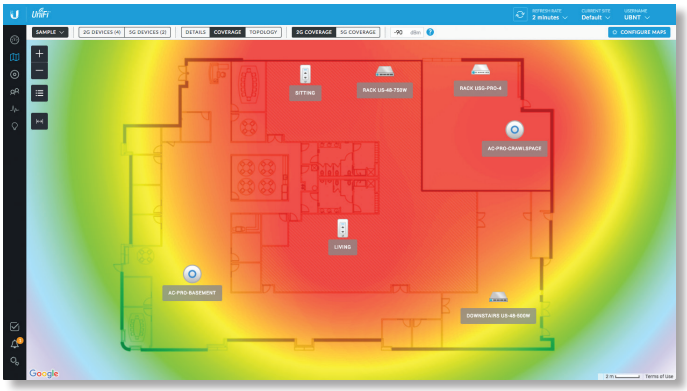

RF Map

Monitor UniFi APs and analyze the surrounding RF environment.

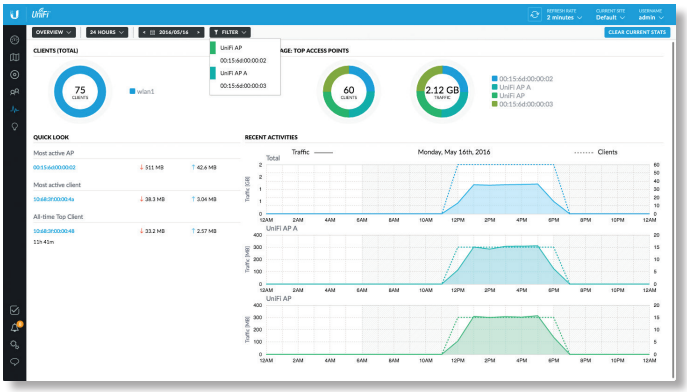

Statistics

UniFi organizes and visualizes network traffic in clear and easy-to-read graphs.

Models

Hardware Overview

Easy Mounting Sleek design for seamless integration into any environment (all accessories included).

LED Unique provisioning and status LED provides administrator location tracking and alerts for each device.

Designed for the Great Outdoors The UniFi AC Pro features weatherproof casing designed specifically for outdoor applications.

Advanced Acoustic Speaker The UniFi AC EDU AP provides high-quality sound with accurate voice reproduction for announcements over Wi-Fi.

Power over Ethernet (PoE) Includes PoE functionality. Each single-pack, except for the UniFi AC In-Wall AP and In-Wall Pro AP, includes a PoE adapter.

PoE Switching

UniFi Switch with PoE You can power your UniFi devices with a UniFi PoE Switch (sold separately). Available in 8, 16, 24, and 48-port versions with multiple power output options, the UniFi PoE Switch conveniently offers auto-sensing IEEE 802.3af PoE/802.3at PoE+.

PoE Standards The UniFi AC EDU, In-Wall, In-Wall Pro, and Pro APs are compatible with an 802.3at PoE+ compliant switch. The UniFi AC Pro AP can also use 802.3af PoE.

Model Comparison Chart

	UAP-AC-IW	UAP-AC-IW-PRO	UAP-AC-LITE	UAP-AC-LR	UAP-AC-PRO	UAP-AC-EDU
Environment	Indoor	Indoor	Indoor	Indoor	Indoor/Outdoor	Indoor
Simultaneous Dual-Band	✓	✓	✓	✓	✓	✓
2.4 GHz Radio Rate	300 Mbps	450 Mbps	300 Mbps	450 Mbps	450 Mbps	450 Mbps
2.4 GHz MIMO	2x2	3x3	2x2	3x3	3x3	3x3
5 GHz Radio Rate	867 Mbps	1300 Mbps	867 Mbps	867 Mbps	1300 Mbps	1300 Mbps
5 GHz MIMO	2x2	3x3	2x2	2x2	3x3	3x3
Range*	100 m (328 ft)	100 m (328 ft)	122 m (400 ft)	183 m (600 ft)	122 m (400 ft)	122 m (400 ft)
Secondary Ethernet Port	✓ (2 Additional Ports)	✓ (2 Additional Ports			✓	✓
Loudspeaker						✓
PoE Mode	802.3at PoE+	802.3at PoE+	24V Passive PoE	24V Passive PoE	802.3af PoE 802.3at PoE+	802.3at PoE+
Ceiling Mount			✓	✓	✓	✓
Wall Mount	✓	✓	✓	✓	✓	✓
Wireless Uplink	✓	✓	✓	✓	✓	✓
DFS Certification	✓	✓	✓	✓	✓	✓

UAP-AC-IW

The UniFi AC In-Wall AP transforms an Ethernet wall connection into a dual-band 802.11AC Wi-Fi Access Point. It features two Gigabit Ethernet ports, one of which delivers PoE to power and connect an 802.3af device to the network. The UniFi AC In-Wall AP provides simultaneous, dual-band, 2x2 MIMO technology and is available in single- and five-packs[1].

UAP-AC-IW-PRO

The UniFi AC In-Wall Pro AP transforms an Ethernet wall connection into a simultaneous, dual-band 802.11AC Wi-Fi Access Point with 3x3 MIMO technology and 50% higher radio rates than the UAP-AC-IW. The UniFi AC In-Wall Pro features two Gigabit Ethernet ports, one of which delivers PoE to power and connect an 802.3af device to the network. It is available in single- and five-packs[1].

UAP-AC-LITE

Featuring an ultra-compact design, the UniFi AC Lite AP delivers a cost-effective combination of value and performance in a reduced footprint: 25% smaller than the standard UniFi AP. The UniFi AC Lite AP provides simultaneous, dual-band, 2x2 MIMO technology and is available in single- and five-packs[2].

UAP-AC-LR

Ideal for long-range deployments, the UniFi AC LR AP offers simultaneous, dual-band operation with 3x3 MIMO in the 2.4 GHz band and 2x2 MIMO in the 5 GHz band. The innovative antenna design provides a long-range, symmetrical-link coverage area, and the antenna gain of the UniFi AC LR AP performs better than one-way, high transmit power does for connecting distant clients. It is available in single- and five-packs[2].

UAP-AC-PRO

Deploy the UniFi AC Pro AP indoors or outdoors, in wireless networks requiring maximum performance. Sporting a weatherproof design, the UniFi AC Pro AP features simultaneous, dual-band, 3x3 MIMO technology and convenient 802.3af PoE/802.3at PoE+ compatibility. It is available in single- and five-packs[2].

UAP-AC-EDU

The UniFi AC EDU AP conveniently integrates Wi-Fi and public address capabilities, making it ideal for campus-wide deployment. The UniFi AC EDU AP features simultaneous, dual-band, 3x3 MIMO technology and convenient 802.3at PoE+ compatibility. It is available in single- and four-packs[2].

[1] We recommend powering the UniFi AC In-Wall and In-Wall Pro APs with the UniFi PoE Switch, as PoE adapters are not included.

[2] Four- and five-packs do not ship with PoE adapters; we recommend powering the UniFi APs with the UniFi PoE Switch instead.

UAP-AC-PRO Specifications

UAP-AC-PRO	
Dimensions	196.7 x 196.7 x 35 mm (7.74 x 7.74 x 1.38")
Weight With Mounting Kits	350 g (12.4 oz) 450 g (15.9 oz)
Networking Interface	(2) 10/100/1000 Ethernet Ports
Port	(1) USB 2.0 Port
Buttons	Reset
Power Method	Passive Power over Ethernet (48V), 802.3af/802.3at Supported (Supported Voltage Range: 44 to 57VDC)
Power Supply	48V, 0.5A PoE Gigabit Adapter*
Power Save	Supported
Maximum Power Consumption	9W
Maximum TX Power 2.4 GHz 5 GHz	 22 dBm 22 dBm
Antennas	(3) Dual-Band Antennas, 2.4 GHz: 3 dBi, 5 GHz: 3 dBi
Wi-Fi Standards	802.11 a/b/g/n/ac
Wireless Security	WEP, WPA-PSK, WPA-Enterprise (WPA/WPA2, TKIP/AES)
BSSID	Up to Four per Radio
Mounting	Wall/Ceiling (Kits Included)
Operating Temperature	-10 to 70° C (14 to 158° F)
Operating Humidity	5 to 95% Noncondensing
Certifications	CE, FCC, IC

* Only the single-pack of the UAP-AC-PRO includes a PoE adapter.

Advanced Traffic Management	
VLAN	802.1Q
Advanced QoS	Per-User Rate Limiting
Guest Traffic Isolation	Supported
WMM	Voice, Video, Best Effort, and Background
Concurrent Clients	250+

Supported Data Rates (Mbps)	
Standard	Data Rates
802.11ac	6.5 Mbps to 1300 Mbps (MCS0 - MCS9 NSS1/2/3, VHT 20/40/80)
802.11n	6.5 Mbps to 450 Mbps (MCS0 - MCS23, HT 20/40)
802.11a	6, 9, 12, 18, 24, 36, 48, 54 Mbps
802.11g	6, 9, 12, 18, 24, 36, 48, 54 Mbps
802.11b	1, 2, 5.5, 11 Mbps

System Example

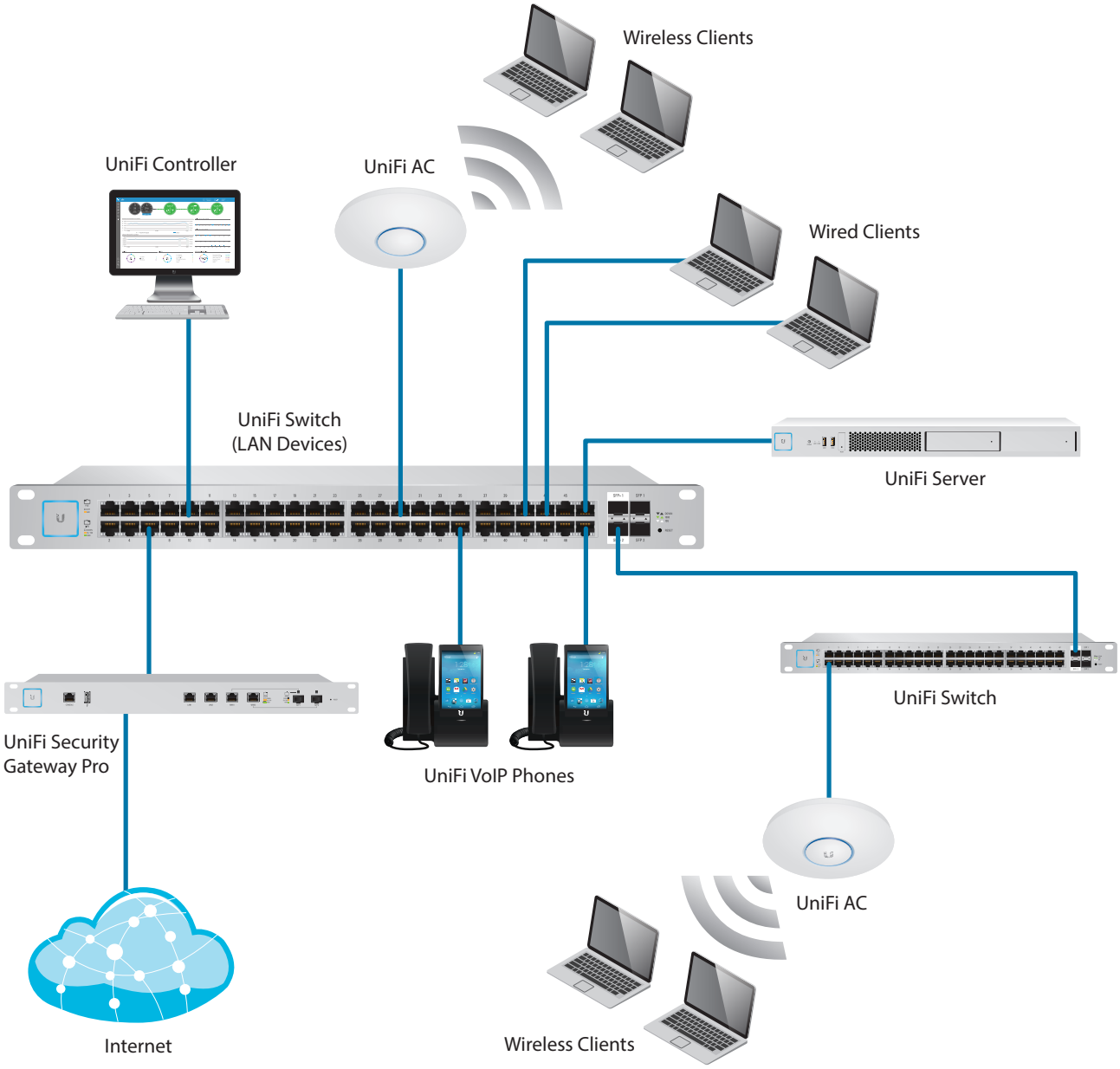

UniFi Switch Compatibility

The UniFi switches are compatible with UniFi Access Points and UniFi G3 Video Cameras, as detailed below.

AP/Camera Model	US-8	US-8-60W	US-8-150W	US-16-150W	US-24-250W	US-24-500W	US-48-500W	US-48-750W
UVC-G3								
UVC-G3-DOME	✓	✓	✓	✓	✓	✓	✓	✓
UAP								
UAP-LR								
UAP-PRO	✓	✓	✓	✓	✓	✓	✓	✓
UAP-AC-LITE [1]	✓	✓	✓	✓	✓	✓	✓	✓
UAP-AC-LR [1]	✓	✓	✓	✓	✓	✓	✓	✓
UAP-AC-PRO	✓	✓	✓	✓	✓	✓	✓	✓
UAP-AC-M	✓	✓	✓	✓	✓	✓	✓	✓
UAP-AC-M-PRO	✓	✓	✓	✓	✓	✓	✓	✓
UAP-AC-IW [2]	✓	✓	✓	✓	✓	✓	✓	✓
UAP-AC-IW-PRO [2]	✓	✓	✓	✓	✓	✓	✓	✓
UAP-AC-HD	802.3at	802.3at	✓	✓	✓	✓	✓	✓

✓ Compatible with the UniFi switch

Requires Instant 802.3af Gigabit PoE Converter: INS-3AF-I-G or INS-3AF-O-G

802.3at Requires 802.3at power; switch provides 802.3af only

Notes:

1. UAP-AC-LITE and UAP-AC-LR models manufactured before September 2016 require the Instant 802.3af Gigabit PoE Converter.

2. For the UAP-AC-IW and UAP-AC-IW-PRO, PoE passthrough is supported by all of the switches listed above except for models US-8 and US-8-60W.

Related Product Datasheets

UniFi Switch 8, UniFi Switch 8-60W:

dl.ubnt.com/datasheets/unifi/UniFi_Switch_8_DS.pdf

UniFi PoE Switches:

dl.ubnt.com/datasheets/unifi/UniFi_PoE_Switch.pdf

Specifications are subject to change. Ubiquiti products are sold with a limited warranty described at: www.ubnt.com/support/warranty
©2015-2017 Ubiquiti Networks, Inc. All rights reserved. Ubiquiti, Ubiquiti Networks, the Ubiquiti U logo, the Ubiquiti beam logo, and UniFi are trademarks or registered trademarks of Ubiquiti Networks, Inc. in the United States and in other countries. All other trademarks are the property of their respective owners.

www.ubnt.com

AUL070517

SECTION 28 31 46

SMOKE ALARM

PART I - General

1.01 Summary

A. This section includes Smoke Alarms in compliance with IRC 2015 and the Solar Decathlon Building Code 2017.
B. Intent: Ensure the life safety for dwelling units and consider positioning for aesthetic effects.

1.02 References

A. IRC 2015, Section R314
B. Solar Decathlon Building Code 2017, Section 3-1
C. UL 268 Compliant

1.03 Delivery, Storage, and Handling

A. General: Follow guidelines outlined in Division 1 Product Requirements.

1.04 Maintenance

A. Replace batteries when indicated
B. Test within manufacturer's recommended intervals.

PART II - Products
Website:
https://www.tycosimplexgrinnell.com/wps/wcm/connect/9a4b1e51-dfc7-43b3-a994-5c89a27e7837/4098-9601%2C+4098-9605+and+bases.PDF?MOD=AJPERES&CACHEID=9a4b1e51-dfc7-43b3-a994-5c89a27e7837

2.01 Manufacturer

A. TycoSimplexGrinnell

2.02 Associated Materials

A. Smoke Alarm: True Alarm Smoke Detector
B. Wiring:

2.03 Assembly

A. Installation shall be field verified for aesthetic and functional positioning. Maintain manufacturer and code required positioning and spacing.
B. Smoke alarms are to be linked with one another per building so that if one alarm is triggered all alarms in that building sound.

PART III - Execution

3.01 Examination

A. Ensure all painting and finishing is completed prior to installation.

3.02 Installation

A. Comply with electrical installation requirements as indicated in referenced codes.
B. Grounding: Ensure smoke alarms are properly grounded.

3.03 Closeout

A. Test Smoke Alarms prior to occupancy and train owner on proper maintenance.

END OF SECTION

SECTION 31 23 23
Flowable Fill (Leveling Pad)

SECTION 31 23 23

FLOWABLE FILL

PART 1 GENERAL

1.01 SECTION INCLUDES

A. CONTRACTOR shall furnish and place controlled low strength material (CLSM) backfill bedding where shown in the DRAWINGS. The pipeline trench shall be excavated to the proper lines, grades, and dimensions and CLSM placed under, along the sides, and on top of the pipe. Unless otherwise shown in the DRAWINGS, a minimum of one (1) foot of CLSM shall be placed over the crown of the pipe.

1.02 RELATED SECTIONS

A. The following is a list of SPECIFICATIONS which may be related to this section:

1. Section 01 57 19, Temporary Environmental Controls

2. Section 31 23 19, Dewatering.

3. Section 31 23 33, Trenching and Backfilling.

1.03 REFERENCES

A. The following is a list of standards which may be referenced in this section:

1. ASTM International (ASTM):

a. C33, Standard Specification for Concrete Aggregates.

b. C94, Standard Specification for Ready-Mixed Concrete.

c. C143/C143M, Standard Test Method for Slump of Hydraulic-Cement Concrete.

d. C150, Standard Specification for Portland Cement.

e. C494/C494M Rev A, Standard Specification for Chemical Admixtures for Concrete.

f. C618, Standard Specification for Coal Fly Ash and Raw or Calcined Natural Pozzolan for Use in Concrete.

g. D4832, Standard Test Method for Preparation and Testing of Controlled Low Strength (CLSM) Test Cylinders.

h. D5971, Standard Practice for Sampling Freshly Mixed Controlled Low-Strength Material.

i. D6023, Standard Test Method for Density (Unit Weight), Yield, Cement Content, and Air Content (Gravimetric) of Controlled Low-Strength Material (CLSM).

j. D6024, Standard Test Method for Ball Drop on Controlled Low-Strength Material (CLSM) to Determine Suitability for Load Application.

k. D6103, Standard Test Method for Flow Consistency of Controlled Low-Strength Material (CLSM).

1.04 SUBMITTALS

A. A minimum of two (2) days prior to starting CLSM WORK. Provide product data on the following:

1. CLSM mix design

2. Fly Ash

3. Admixtures

PART 2 PRODUCTS

2.01 MATERIALS

A. General:

1. The CLSM bedding shall consist of a mixture of sand, coarse aggregate, cement and water.

2. Fly ash and approved admixtures may be used to obtain the required properties of the mix.

3. The mix shall have good workability and flowability with self-compacting and self-leveling characteristics.

4. No changes shall be made in the amounts or sources of the approved mix ingredients without the approval of ENGINEER.

5. Product inspection and field-testing of the approved mix may be made by, or on behalf of, OWNER.

B. Cement: All cement used shall be Type II Portland cement which shall conform to the requirements of ASTM C150.

C. Fly Ash: Fly ash may be either Class C or Class F. The fly ash shall conform to ASTM C618.

D. Aggregates:

1. Fine Aggregate: All fine aggregate shall conform to the grading and quality requirements of ASTM C33.

2. Coarse Aggregate: Coarse aggregate shall conform to the grading and quality requirements of ASTM C33 for size No. 476, No. 57, or No. 67.

E. Water: The batch mixing water and mixer washout water shall conform to the requirements of ASTM C94.

F. Admixtures:

1. Chemical admixtures that do not contain calcium chloride and conform to ASTM C494/C494M for concrete may be used in the CLSM mix.

2. All chemical admixtures shall be compatible with the cement and all other admixtures in the batch.

G. CLSM Proportions:

1. Strength: CLSM shall have a minimum twenty-eight (28) day compressive strength of one hundred (100) psi when molded and cured as in conformance with ASTM D4832.

2. The CLSM shall have a minimum cement content of fifty (50) pounds per cubic yard. The water-cementitious materials ratio of the mix shall not exceed three and one-half to one (3.5:1).

3. Air-Entrainment: All CLSM shall be air entrained to a total air content of approximately five percent (5%).

4. Slump: The minimum slump shall be six (6) inches and the maximum slump shall be eight (8) inches when tested in accordance with ASTM D6103.

5. Aggregate: Fine aggregate shall be between fifty percent (50%) and sixty percent (60%) by volume of the total aggregates in the CLSM mix.

6. Consistency:

a. The consistency of the CLSM slurry shall be such that the material flows easily into all openings between the pipe and the lower portion of the trench.

b. When trenches are on a steep slope, a stiffer mix of slurry may be required to prevent CLSM from flowing down the trench.

c. When a stiffer mix is used, vibration shall be performed to ensure that the CLSM slurry completely fills all spaces between the pipe and the lower portion of the trench.

PART 3 EXECUTION

3.01 GENERAL

A. CLSM shall be placed as closely behind pipe laying operations as possible.

B. CLSM shall not be placed, if, in the judgment of ENGINEER, weather conditions are unsuitable.

C. CLSM shall not be placed when the trench bottom or walls are frozen or contain frozen materials.

D. CLSM shall not be placed when the air temperature is below forty degrees Fahrenheit (40°F) unless the air temperature is thirty five degrees Fahrenheit (35°F) or more and the temperature is rising.

3.02 PLACEMENT

A. Pipe shall be placed on two (2) sandbags and leveled to the proper grade. Precast or other types of rigid pads that constitute a point load are unacceptable.

B. CLSM shall be placed under the pipe from one side so that it flows under the pipe until it appears on the other side.

1. CLSM shall be added to both sides of the pipe until it completely fills the space between the pipe and the sides of the trench, to the depths shown in the DRAWINGS.

2. Rodding, mechanical vibration and compaction of CLSM shall be performed to assist in consolidating the CLSM.

C. When required to prevent uplift, the CLSM shall be placed in two (2) stages as required, allowing sufficient time for the initial set of the first stage before the remainder is placed.

D. CLSM shall be deposited as nearly as practical in its final position and in no way disturb the pipe trench or cause foreign material to become mixed with the CLSM.

E. Soil backfill shall not be placed until the CLSM has reached the initial set.

1. If backfill is not to be placed over the CLSM within eight (8) hours, a six-inch (6") cover of moist earth shall be placed over the CLSM surface.

2. If the air temperature is fifty degrees Fahrenheit (50°F) or less, the moist earth cover should be at least eighteen inches (18") thick.

END OF SECTION

SECTION 31 23 23.43

GEOFOAM

PART I - General

1.01 Summary

A. This section includes geofoam
B. Intent: Geofoam was chosen as a way to spread building loads while providing a complete building insulation layer. Also, it is simple to sculpt and rout channels for running utilities.

1.02 References

A. ASTM

1. C 165 Test Method for Measuring Compressive Properties of Thermal Insulation
2. C 203 Breaking Load and Flexural Properties of Block-Type Thermal Insulation
3. C 303 Test Method for Dimensions and Density of Preformed Block an Board-Type Thermal Insulation
4. C 390 Practice for Sampling and Acceptance of Thermal Insulation lots
5. D 1621 Compressive Properties of Rigid Cellular Plastics
6. D 1622 Apparent Density of Rigid Cellular Plastics
7. D 1623 Tensile and Tensile Adhesion Properties of Rigid Cellular Plastics
8. C 2863 Test Method for Measuring the Minimum Oxygen Concentration to Support Candle-Like Combustion of Plastics (Oxygen Index)
9. D 6817 Specification for Rigid Cellular Polystyrene Geofoam

B. Underwriter Laboratories

1. BRYX

1.03 Delivery, Storage, and Handling

A. General: Follow guidelines outlined in Division 1 Product Requirements.
B. Do not expose geofoam to open flame. Control dust and keep area clean to prevent risk of combustion.
C. Avoid contact with pregnant persons.
D. Prevent damage to the Geofoam blocks during delivery, storage, construction, and deconstruction. Prior to delivery of Geofoam block fill to the project site, the construction team shall review and be thoroughly knowledgeable with the manufacturer's care and handling recommendations. Any Geofoam block that is exposed to sunlight for more than six months shall be covered with an opaque material to prevent ultraviolet light degradation.
E. The team shall protect the Geofoam blocks from: (1) Organic solvents such as acetone, benzene, and paint thinner; (2) Petroleum based solvents such as gasoline and diesel fuel; (3) Open flames.

1.04 Quality Assurance

A. Manufacturer's test reports to be reviewed showing compliance with properties in Table 1 below.

PART II - Products

Website: www.insulfoam.com

2.01 Manufacturer

A. Approved Material: Insulfoam GF manufactured by Insulfoam LLC – Headquarters 19727 57th Avenue. E., Puyallup, WA 98375. Ph: 800-248-5995 Fax: (253) 383-7100.

B. Material Properties:
TABLE 1: Physical Properties of EPS Geofoam

TYPE - ASTM D6817	EPS12
Density, min., kg/m 3, (lb/ft3)	11.2 (0.70)
Compressive Resistance @ 1% deformation, min., kPa (psi)	15 (2.2)
Flexural Strength min., kPa (psi)	69 (10.0)
Elastic Modulus, min., kPA (psi)	1500 (220)
Oxygen Index, min., volume %	24.0

Geofoam should be considered combustible and should not be exposed to open flame or any source of ignition. The Geofoam shall be manufactured using modified expanded polystyrene. Manufacturer must have a UL classification in category BRYX.

2.02 Associated Materials

A. Pencil Rod: Used to secure geofoam to flowable to prevent lateral shifting.
B. Urethane Adhesive: Used to adhere Hardipanel edges.
C. Insulgrip Plates: Used between layers of Geofoam to carry lateral loads without shifting.
D.

2.03 Fabrication

A. Geofoam may be fabricated using material with recycled content provided the physical properties of Table 1 are met. Unless the project dictates otherwise, the blocks shall have a height of at least .91 m (36 inches), a width of at least 1.22 m (48 inches), and length of at least 2.44 m (96 inches). All blocks shall be within tolerances of 0.5% of respective height, width and length dimensions. Additional field and/or shop trimming and cutting will be required as necessitated by the geometry of the fill being constructed.

PART III - Execution

3.01 Examination

A. Check that flowable fill is cured and remove water and any debris from flowable fill surface prior to placing geofoam.

B. In the event that geofoam is being placed on sand or gravel, ensure there is a level and properly compacted surface.

3.02 Installation

A. Offset rows of geofoam by 2 ft.
B. Each layer shall be turned perpendicular to the layer below.
C. Place InsulGrip plates per manufacturer's recommendations or per engineers specifications whichever requires more plates.
D. Blocks shall be cut using a saw or hot wire.
E. Connectors shall be galvanized steel multi-barbed connectors or a urethane adhesive. Each connector shall have a lateral holding strength of at least 27.22 kg (60 lbs) when tested with an EPS15 Geofoam.
F. Install a minimum of 2 connectors for each 4 ft x 8 ft section of Geofoam material or as shown on plans or directed by the Engineer. Press firmly into the rigid foam until the connector is flush with the surface. Position the next foam block as specified and seat firmly before placing subsequent blocks.

END OF SECTION

SECTION 32 93 00

Green Wall

Creating Cities Where Urban Meets Nature

ELMICH

VersiWall™ GP Tray Planter

Vertical Greening Pocket

Our Innovation Your Solution

Elmich VGP™ Living Wall offers architects and developers a cost-effective solution to turn monotonous walls into aesthetically-pleasing living green walls with the flexibility of choosing from an array of mounting options to suit existing wall conditions.

Engineered in Australia

SINGAPORE GREEN BUILDING PRODUCT CERTIFIED Singapore Green Building Council Collaborator

2011/12 ecospecifier global

find it on ecospecifier.com

VersiWall™ GP Tray Planter

VersiWall™ GP offers a simple solution for installation of aesthetically-pleasing living walls.

VersiWall™ GP Tray

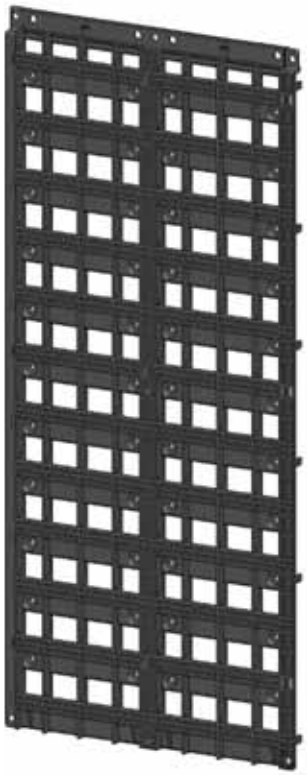

VersiWall™ GP Mounting Panel

About Elmich VGP™ Planter Wall

The VersiWall™ GP is an easy-to-install and low-maintenance modular vertical greening system with a choice of mounting, planting density and growth media options to suit different wall conditions.

Depending on plant size and planting density selected, VersiWall™ GP Trays allow plant spacings of 200mm and 250mm horizontally and 150mm and 225mm vertically.

VersiWall™ GP Trays can be individually replaced or removed for wall maintenance or design change. Each VersiWall™ GP Tray has a water reservoir with a cover designed for the provision of a capillary wick to re-use stored water and facilitate sustained plant growth.

The use of mounting frames minimises wall penetrations and enables installation to be carried out easily and safely by just one person.

VersiWall™ GP Trays and VersiWall™ GP Mounting Panels are manufactured from UV-stabilised recycled polypropylene that meets requirements for international “Green Building” certification.

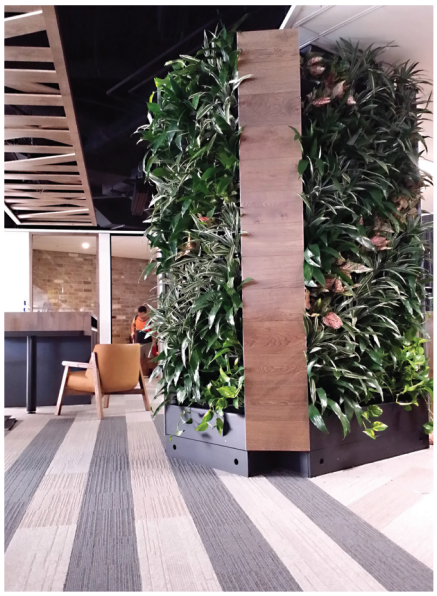

** VersiWall™ GP has international patent pending.*

Distinctive Features

Planting Media
Suitable for most green wall plants using different planting media.

Safety
Anti-lift arms prevent inadvertent dislodgment of trays.

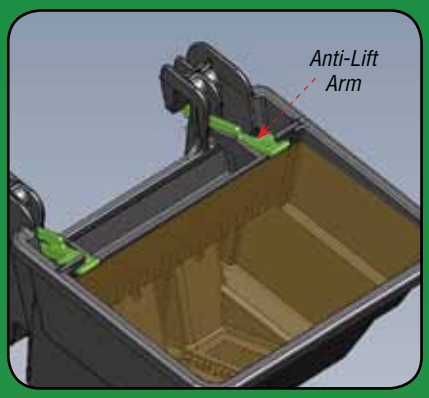

Universal Mounting
Able to install on different mounting frames with 6-point anchoring system.

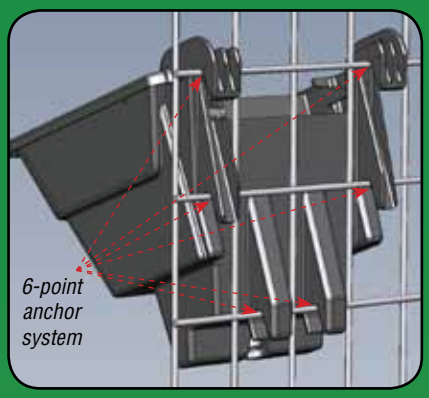

Baffle Plate
Distributes irrigation across the Tray and prevents media spillage.

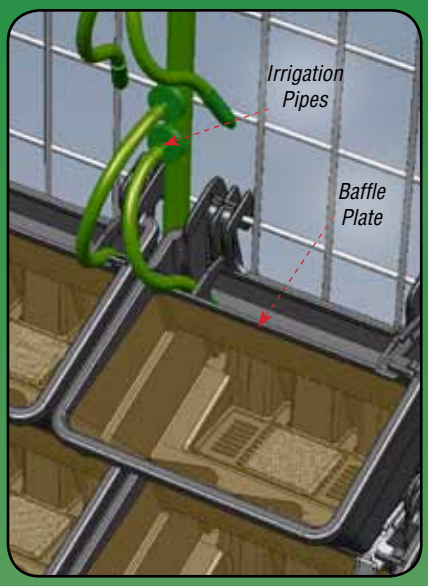

Planting Density
Allows different vertical and horizontal spacing for varied planting options.

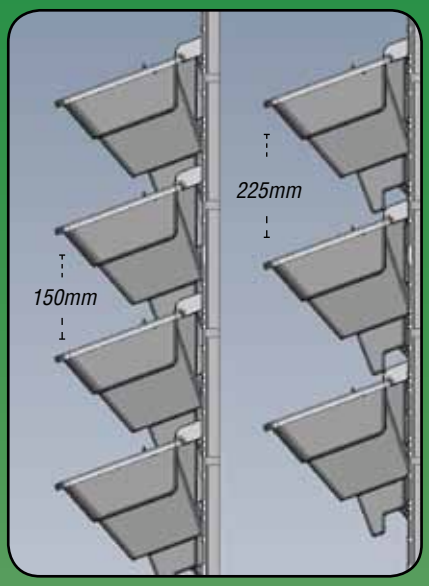

Drainage
Excess water flows into underlying trays or is discharged through drainage pipe.

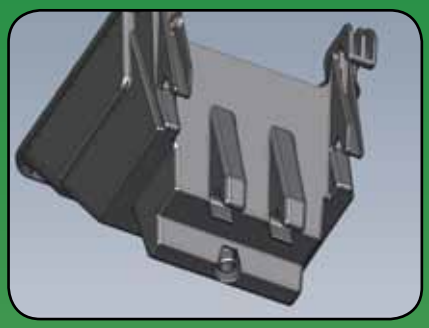

VGP Tray Plug
Prevents water from draining out of VGP Tray. Available separately.

Projects

Indoor and Outdoor Green Walls

Technical Specifications

VersiWall™ GP

Material	Recycled Polypropylene (UV stabilised)	
Size (mm)		
Tray	Overall	195 (W) x 207 (H) x 192 (D)
	Nominal	200 (W) x 150 (H) x 195 (D)
Mounting Panel	Overall	418 (W) x 925 (H) x 22 (D)
	Nominal	400 (W) x 900 (H) x 22 (D)
Planting Media Volume (l)	~ 1.8	
Weight (kg/m²)		
Close Planting (~33 trays)	~ 93	
Spaced Planting (~22 trays)	~ 62	
Vertical Distance between trays (mm)		
@150mm pitch	0 (trays overlap)	
@225mm pitch	40	
Biological / Chemical Resistance	Unaffected by moulds and algae Good resistance to alkali and bitumen	

Advantages

Planting Media - Allows wide choice of planting media for green wall plants.

Safety - Anti-lift arms prevent inadvertent dislodgement of trays.

Drainage - Excess water flows into underlying trays or is discharged through drainage pipe.

Baffle Plate - Distributes irrigation across the Tray and prevents media spillage.

Planting Density - Allows different vertical and horizontal spacing for varied planting options.

Water Re-use - Capillary wick draws stored water and fertilizer from reservoir.

Irrigation - Irrigation pipes are concealed neatly at the rear between Trays.

Universal Mounting - Able to install on different mounting systems with up to 6 universal anchoring points.

Mounting Panel - Simplifies installation with minimal wall penetrations and less bolts are needed.

Soil Volume - Holds 1.8L of soil equivalent to volume in 150mm dia. pot.

Tray Width - 200mm tray width allows flexibility in plant spacing and tray layout.

Mounting Systems

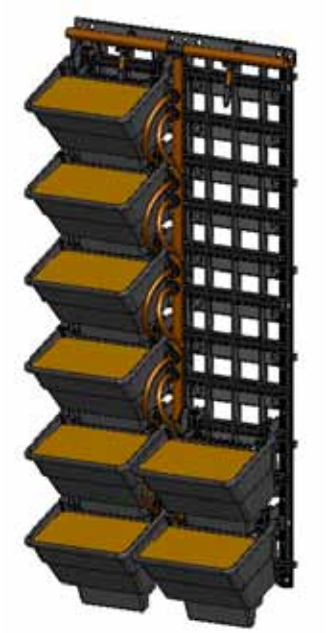

VersiWall™ GP Mounting Panel

Easy to install proprietary panel made from recycled plastics.

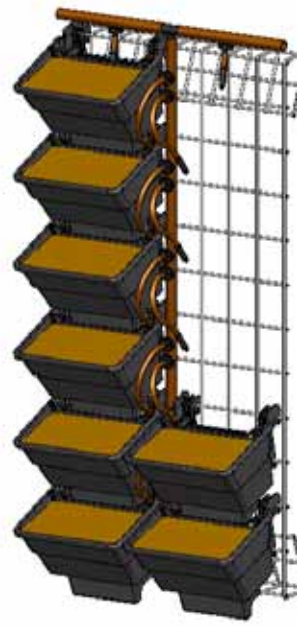

Welded Mesh

Standard welded mesh with rod spacing 50mm wide x 75mm or 150mm high.

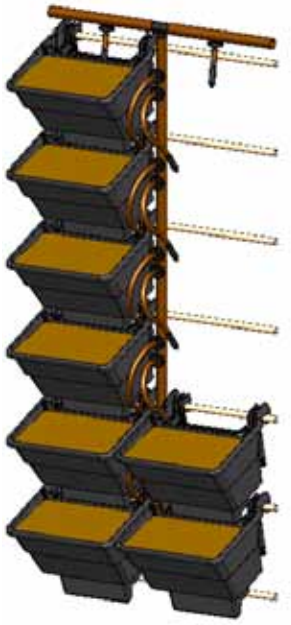

Steel Rods

Steel rods at 75mm or 150mm intervals providing a more minimalistic design.

Distributed by:

Note: The information provided in this brochure is based on current knowledge and experience and does not infer any legally binding assurance or warranty, expressed or implied. Intending purchasers should verify whether any changes to specifications or applications or otherwise have been made since the issue of this literature. Environmentally-friendly recycled materials are used in product manufacture wherever possible. Physical product properties including colour may differ due to source of raw materials used. Colour may also fade due to UV exposure. All components of the product are designed for specific application, design calculations and any variation and/or deviation therefrom shall be the responsibility of the specifier and/or user.

ELMICH

ELMICH PTE LTD www.elmich.com
Singapore: (+65) 6356 2800
info@elmich.com
Singapore | Seattle | Sydney | Zurich | Guangzhou | Shanghai

BCM Business Continuity Management CERTIFIED
ISO 9001:2008 BUREAU VERITAS Certification
Strategic Partner
Member SINGAPORE GREEN BUILDING COUNCIL
© Elmich Pte Ltd LE-VGM072013SG

SECTION 48 14 00
Solar Panel System

itek ENERGY SE SOLAR MODULES

Design & Engineering Data

itek ENERGY

Building Solar | Powering The Future

GENERAL DATA

Cell type	• 60 high-efficiency monocrystalline p-type cells • 6x10 cell matrix
Solar Glass	• Ultra-clear anti-reflective treatment • Tempered, with low iron content • Anti-glare prismatic subsurface texture
Backsheet	• Multi-layered • Engineered adhesion for maximum weather protection
Frame	• High-strength corrosion-resistant anodized aluminum • Compatible with standard racking, accomodating both top-down clamps and bottom-flange mounting
Cable	• 42" 90C 12 AWG PV wire
Junction Box	• 3 bypass diodes • 1000 VDC MC4 connectors
Grounding	• Certified for Wiley Electronics WEEB™ grounding clips • Eight standard grounding locations per module for reduced ground wire length

QUALIFICATIONS

UL Listing	UL 1703
Fire Rating	Type 2
PID Free	96 + hours

Intertek

Certified Made in Washington

ELECTRICAL DATA*

	280 SE	285 SE	290 SE	295 SE	300 SE
Maximum Power - P_{MAX} (Wp)	280	285	290	295	300
Maximum Power Voltage - V_{MPP} (V)	32.3	32.4	32.6	32.8	32.9
Maximum Power Current - I_{MPP} (A)	8.6	8.7	8.8	8.9	9.0
Open Circuit Voltage - V_{OC} (V)	39.2	39.3	39 5	39.7	39.8
Short Circuit Current - I_{SC} (A)	9.3	9.4	9.5	9.6	9.7
Module Efficiency	16.70%	16.99%	17.29%	17.59%	17.89%

NOTE: SPECIFICATIONS SUBJECT TO CHANGE WITHOUT NOTICE

MECHANICAL DATA

Dimensions	1001mm X 1675mm X 50mm
Weight	43 lbs

MAXIMUM RATINGS

Operational Temperature	-40...+ 90°C
Maximum System Voltage	1000 VDC
Design Load (UL 1703)	up to 113 lbs/ft²
Maximum Load (UL 1703)	551 kg/m² (5400 Pa)
Maximum Wind Load	113 lbs/ft²
Max Series Fuse Rating	15A
Max Reverse Current	15A

TEMPERATURE RATINGS

Nominal Operating Cell Temperature (NOCT)	45.01°C
Temperature Coefficient of P_{MPP}	-0.39%/°C
Temperature Coefficient of V_{OC}	-0.29%/°C
Temperature Coefficient of I_{SC}	+0.04%/°C
Temperature Coefficient of V_{MPP}	-0.38%/°C

*Electrical characteristics may vary within ±2% of the indicated values at Standard Test Conditions (STC): Irradiance of 1,000W/m², AM 1.5 spectrum, cell temperature at 25˚C.

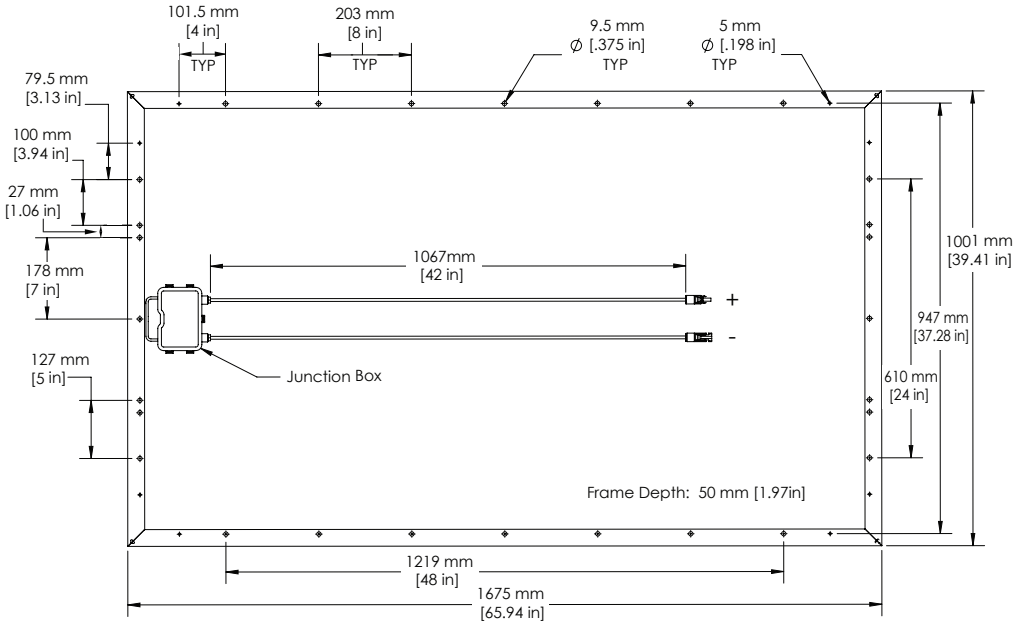

V07.19.16

3886 Hammer Drive | Bellingham, Washington 98226 | 360.647.9531 | email:info@itekenergy.com | www.itekenergy.com

Safety Instructions

Important Warnings

- All safety instructions in this Installation and operation guide should be read and understood before attempting to install, wire, operate or maintain this module.
- The installer is responsible to follow all applicable local, regional and national building and electrical codes when installing this product.
- All installations should be performed by qualified and authorized personnel.
- Repair or modification of this module made in the field will void the warranty.

Handle with care: fragile glass, plastic and exposed wires

- Handle modules using the aluminum frame rails.
- Do not pick up modules by the junction box or wires.
- Do not handle modules when wet or during periods of high wind.
- Do not stand on, drop or allow objects to sit or drop on the modules.
- Protect the glass surface and backing from damage from tools or other objects during installation.
- Do not set modules down on the frame corners; use the entire frame edge.
- Wear gloves and use safety glasses when handling modules.

Fire: Modules are Type 2 fire rated

- The fire rating of this module is valid only when mounted in the manner specified in the mechanical mounting instructions
- Fire Classification A, B or C is dependent on UL2703 Racking used (as per racking manufacturer instructions)
- “Class C” fire classification for Canada only
- Use ground and arc fault circuit protection as required by local codes for roof mounting.
- Maintain a minimum clearance of 1.5” from roof (3”- 6” is optimal for air flow).
- Roof surface must be a fire resistant covering appropriate for the application.
- Refer to local fire marshal for special requirements when installing this module.
- Rated for unlimited roof pitch.

Electrical: Contact with electrical voltage and current can be hazardous

- Do not expose modules to artificially concentrated sunlight.
- Do not connect or disconnect modules under load or while exposed to light.
- Use insulated tools, safety glasses and gloves to reduce the risk of electrical shock.
- Damaged modules should not be installed due to the risk of hazardous electrical shorts.
- Do not subject modules to insulation testing above the system rating of 600\1000 Volts DC; damage to internal components may occur and void the warranty.
- The rating of the over-current protection device shall not exceed 15 Amps DC.

Disclaimer of Liability

- The use of this panel **Installation and Operations Manual** are beyond the control of ~~itek~~ iTek Energy, therefore iTek Energy does not assume responsibility and expressly disclaims liability for loss, damage, injury, or expense associated with such installation, operation use or maintenance of this panel.
- iTek Energy assumes no responsibility for any infringement of patents or other rights of third parties that may result from the use of this panel. No license is granted by implication or other-wise under any patent or patent rights.
- The information in this **and Installation and Operations Manual** are based on iTek Energy knowledge and experience and believed to be reliable, but such information including product specifications (without limitations**)** and suggestions do not constitute a warranty, expressed or implied. iTek Energy reserves the right to make changes to the product, specifications or this manual without prior notice.

This document may be provided in multiple languages. If there is a conflict between versions, the English version shall take precedence.

Mechanical Installation

General

- The module is considered to be in compliance with UL 1703 only when the module is mounted in the manner specified by the mounting instruction below.
- Modules must be securely fastened to the mounting structure; follow the torque guidelines of the rail manufacturers or fastener suppliers (minimum torque guidelines for common fasteners).
- Frame holes are large enough to accommodate 3/8" SS bolts if additional strength is needed for a particular application as determined by the system designer.
- Use Stainless Steel fasteners or an equivalent fastener designed for attachment to aluminum in order to minimize galvanic corrosion.
- It is recommended that anti-seize lubricant be used to prevent galling of Stainless Steel fasteners.
- The installer must verify that the mounting structure and all fasteners can handle the applicable wind, snow and seismic loads in addition to the weight of the modules, as required by local building codes.
- Follow the minimum attachment guidelines as outlined in Attachment Guideline table, exceeding the loads in the mounting tables will void the warranty and will not meet the UL listing tests performed on this module.
- Do not drill additional holes in the mounting frame; this will void the warranty.
- Allow minimum of 3/8" (10mm) between modules for thermal expansion.
- Always keep the backsheet clear of foreign objects and structural elements that may contact the module during mechanical loading from wind, snow or seismic activity.
- Any module without a frame (laminate) shall not be considered to comply with the requirements of UL 1703 unless the module is mounted with hardware that has been tested and evaluated with the module under this standard or by a field inspection certifying that the installed module complies with the requirements of UL 1703.

Installation Methods

I. **Method #1 - Bolted to base flange** Bolting with user supplied minimum 4 each ¼"-20 Stainless Steel bolts (Grade 5 or better), with 1 nut, 2 SAE large flat washers 1 lock washer per bolt, attached through the mounting holes in the foot of the Frame. Can substitute 4 each ¼" – 20 Knurled Flange Bolts and Nuts for washers and lock nut on nut side. Follow "Attachment Guidelines" in Table #1 pg. 4 for specific load configurations.

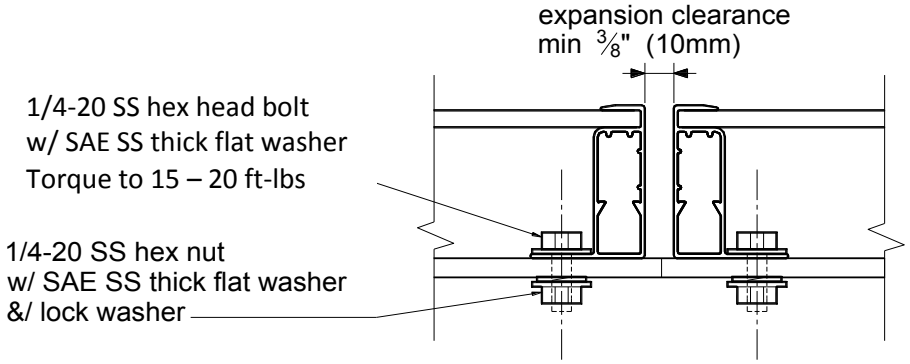

Fig. 1

II. **Method # 2 - Clamp and Rail Style -** Using mounting clamps, supplied by various module rail manufacturers, such as Unirack, S-5 Clamps, Schletter, Sunmodo or equivalent. Follow "Attachment Guidelines" in Table #1 pg. 4 for specific load configurations.

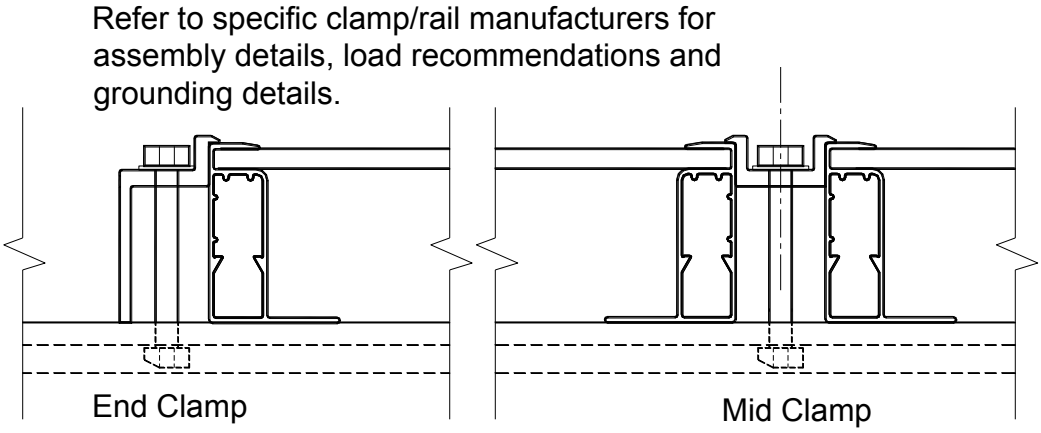

Fig. 2

III. **Method# 3 – Insertion Style Rails –** where frame slides into and is captured by a "C" channel rail (see Fig 3), such as Solar Flex Rack or equivalent. Follow "Attachment Guidelines" in Table #1 pg. 4 for specific load configurations.

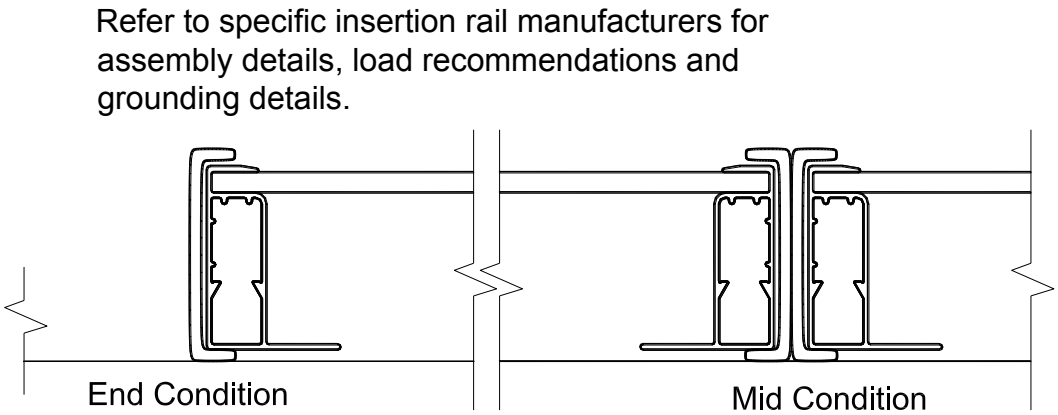

Fig. 3

IV. **Method # 4 UL2703 Integrated Grounding Bond Racking –** Grounding when installed using UL2703 Certified Racking in accordance with the racking manufacturer installation instructions is acceptable.

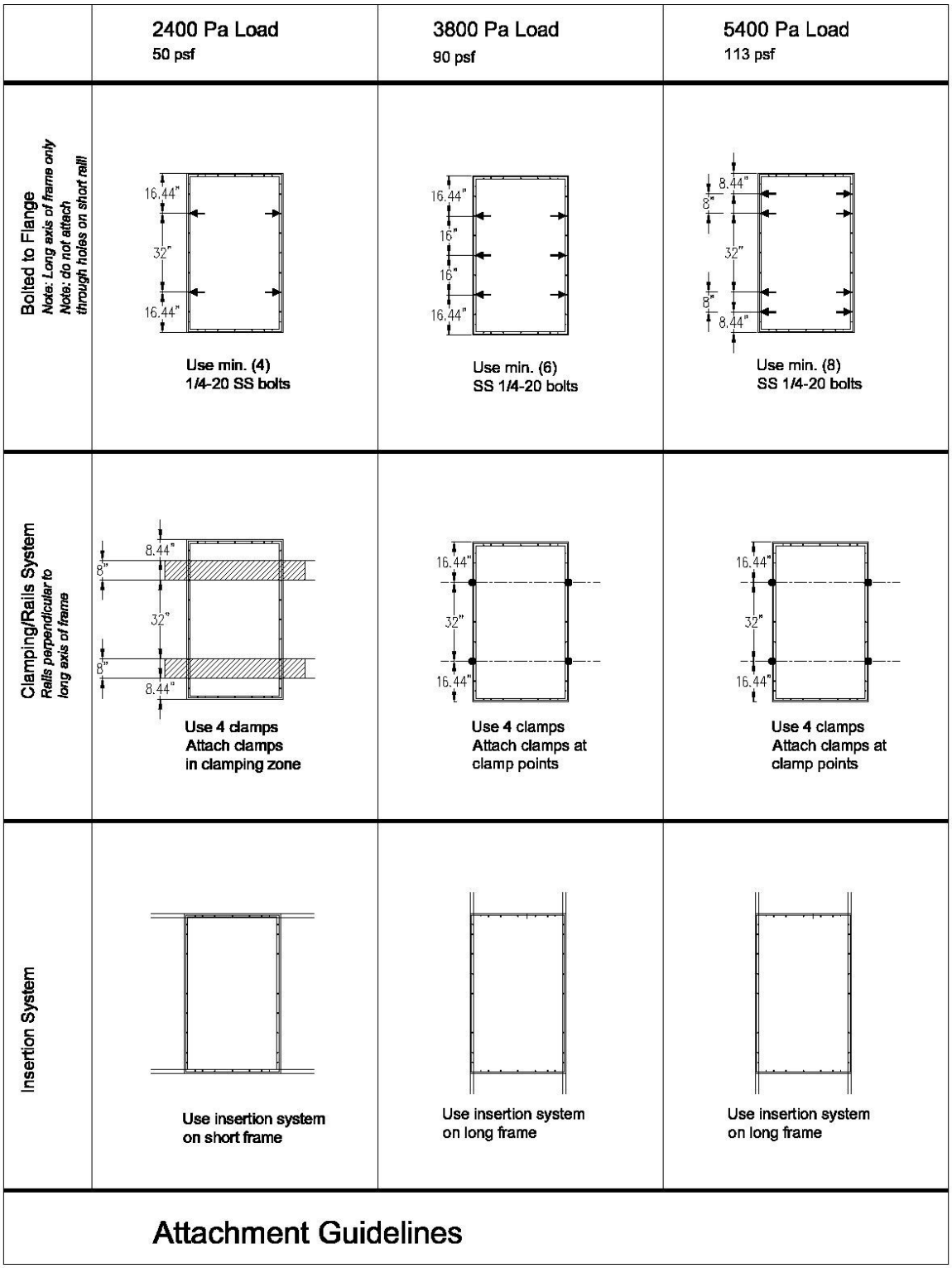

Table 1 Mounting and Load Details

<u>Note: Loads in Table 1 are maximum loads tested. System designers and/or engineers are responsible for applying the appropriate Factor of Safety for the application.</u>

Electrical Installation

General

- This product must be installed by a licensed electrician in accordance with the applicable electrical code (i.e. the NEC for the USA and CEC for Canada).
- In Canada, installation shall be in accordance with CSA C22.1, Safety Standard for Electrical Installations, Canadian Electric Code, Part I.
- Under normal conditions, a photovoltaic module is likely to experience conditions that produce more current and/or voltage than reported at standard test conditions. Accordingly, the values of ISC marked on this module should be multiplied by a factor of 1.25 when determining component conductor ampacities, fuse sizes, and size of controls connected to the PV output.
- Refer to Section 690.8 of the National Electrical Code for an additional multiplying factor of 125 percent (80 percent de-rating) which may be applicable.
- Use Connectors supplied for making series connections between modules or attaching directly to a micro inverter. Modification of the connectors supplied with the module will void the warranty and the UL listing of this module.
- If additional wire lengths are needed between modules, use a minimum wire size of 12 AWG RHW-2, USE-2 or PV Wire, 90C rated for connecting modules as required by local codes for your specific application.
- Use only matching brand connectors (MC4 or Renhe 05-6) when extending module wire, unless transitioning to a different wiring system. Mismatched connectors can become a fire hazard and will void module warranty.
- Transitions to other wiring systems should occur in a junction box or listed DC combiner box as per NEC code requirements.
- Provide 15 amp maximum series fuse as required by NEC 690.

Grounding Method

- A module with exposed conductive parts is considered to be in compliance with UL 1703 only when it is electrically grounded in accordance with the instructions presented below and the requirements of the NEC
- Frames of modules and the racking system they are attached to must be grounded per NEC Article 690 and 250 to meet local code requirements.
- Frames of each module are factory bonded and tested, so only one grounding point per module is required, unless otherwise specified by the UL 467 listing requirements of the specific bonding method being used.
- Additional bonding to ground of mounting structure may be required, please refer to specific mounting system manufacturer for recommended methods and local codes for requirements as per NEC Article 250.
- Minimum Grounding wire size is 14 AWG if mechanically protected or inaccessible, otherwise 6 AWG must be used; refer to local codes for specifics.
- Any grounding method listed to UL 467 “Standards for safety for Grounding and Bonding Equipment”, UL 1703 or 1741 may be used to bond the module frame and structure if strictly following all manufacturers’ instructions and recommendations for grounding specific to that method are followed.
- Itek energy has been tested and approved by Wiley for using the WEEB grounding system.
- Use the following Default Minimum Installation Torque values unless otherwise specified by the listing specification given by the manufacturer.
- Any racking system listed to UL 2703 for grounding, mechanical load, and Fire class may be used provided all manufacturer instructions for that system are followed.

Installation Torque Specifications

Stainless Steel Fastener size	Installation Torque with anti-seize
1/4”	10 ft-lb (13.5 N-m)
5/16”	15 ft-lb (20.5 N-m)
3/8”	30 ft-lb (41 N-m)

Table 2 Torque Specifications

I. **Method #1 Direct Bond -** Bonding of Module to bolted conductive rail or frame using WEEB9.5/9.5L between the module and rails or an equivalent listed product. The rail then needs to be connected to a grounding conductor using **Method # 3 Lay-in Lug** or an equivalent listed device.

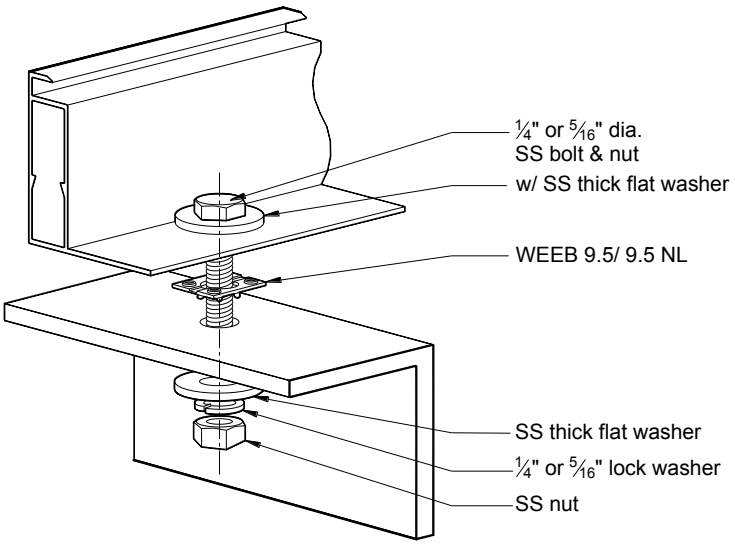

Fig 4

II. **Method #2 Grounding Clip –** Grounding clips such as UGC-1/2 (UNIRACK) or WEEB-XXX (Wiley, XXX designates manufacturer's style of rail or structure, see Wiley website www.wiley_LLC.com), or an equivalent listed device used to bond the modules to the rail or mounting structure. The rail then needs to be connected to a grounding conductor using the **Method # 3 Lay-in Lug** or an equivalent listed device.

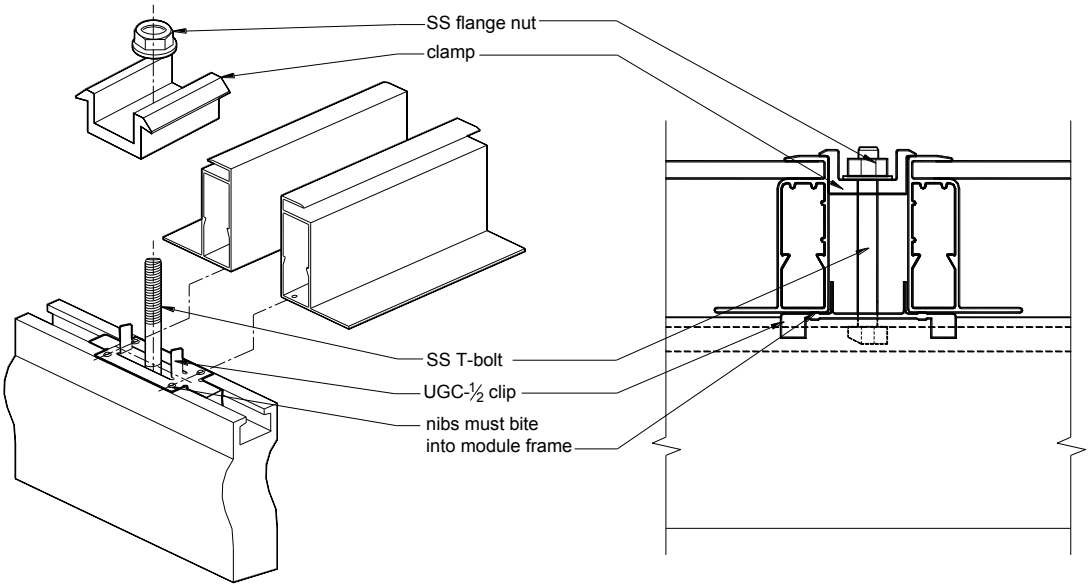

Fig 5

III. **Method # 3 Lay-in Lug -** Attach grounding conductor to a lay-in lug on each module using marked grounding holes in module or any unused mounting holes using a WEEB-Lug or an equivalent listed device. This method can also be used to attach ground wire to mounting rails.

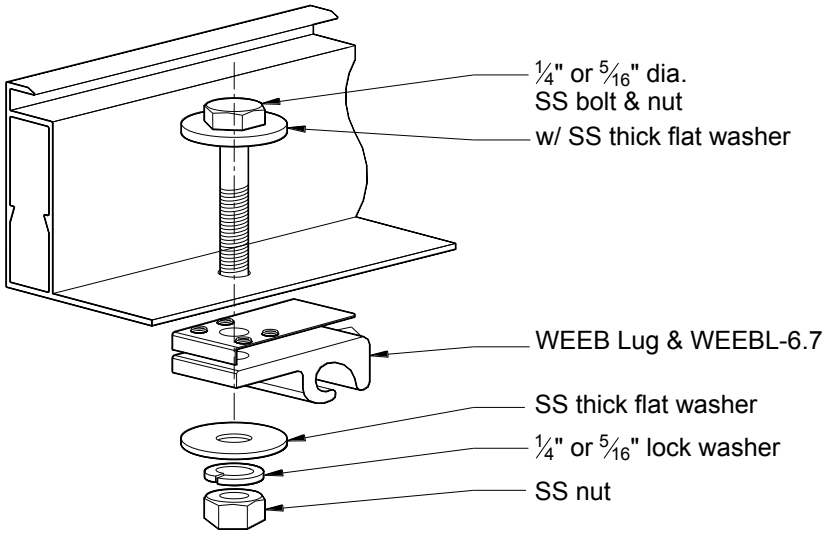

Fig 6

IV. **Method # 4 UL2703 Integrated Grounding Bond Racking –** Grounding when installed using UL2703 Certified Racking in accordance with the racking manufacturer installation instructions is acceptable.

Electrical Specifications at Standard Test Conditions*

Maximum system voltage – 600/1000 VDC Maximum Fuse Rating - 15 Amps DC**

Electrical Data*	235 SE	240 SE	245 SE	250 SE	255 SE	260 SE	265 SE	270 SE	275 SE	280 SE	285 SE	290 SE	295 SE	300 SE	305 SE	310 SE	315 SE
Maximum Power – P_{max} (Wp)	235	240	245	250	255	260	265	270	275	280	285	290	295	300	305	310	315
Maximum Power Voltage – V_{MPP} (V)	31.9	32.1	32.2	32.4	31.5	31.7	31.8	32.0	32.1	32.3	32.4	32.6	32.8	32.9	33.1	33.2	33.3
Maximum Power Current – I_{MPP} (A)	7.7	7.8	7.9	8.0	8.1	8.2	8.3	8.4	8.5	8.6	8.7	8.8	8.9	9.0	9.1	9.2	9.3
Open Circuit Voltage – V_{OC} (V)	37.7	37.9	38.1	38.3	38.4	38.6	38.7	38.9	39.0	39.2	39.3	39.5	39.7	39.8	40.0	40.1	40.3
Short Circuit Current – I_{SC} (A)	8.4	8.5	8.6	8.7	8.8	8.9	9.0	9.1	9.2	9.3	9.4	9.5	9.6	9.7	9.8	9.9	10.0
Power Density (W/m^2)	140.2	143.1	149.6	146.1	152.1	155.1	158.1	161.0	164.0	167.0	170.0	173.0	175.9	178.9	181.9	184.9	187.9

* Electrical characteristics may vary within ±2% of the indicated values at Standard Test Conditions (STC): Irradiance of $1000W/m^2$, AM 1.5 spectrum, cell temperature 25°C(77°F).
**Junction Box, Cables, and connectors will be marked 600 or 1000 VDC Installer is responsible to insure correct voltage is used for the application.

Mechanical Specifications

Cell	60 each 156.75mm Monocrystalline
Diodes	3 each, 1 per 20 cells, 15A ZJRH PS4025 6 each, 2 per 20 cells, 15A ZJRH PS4512 3 each, 1 per 20 cells, 15A ZJRH PVS105
Junction Box	RENHE ZJRH PVRH701L 600VDC RENHE ZJRH PVRH701L 1000VDC
Connectors	MultiContact (PV-KST4, PV-KBT4), RENHE (05-6) 600 VDC MultiContact (PV-KST4, PV-KBT4), RENHE (05-6) 1000 VDC
Wire	PV 12AWG, 42" 600VDC; PV 12AWG, 42" 2000VDC
Dimensions	1.675mm x 1001mm x 50mm (65.95" x 39.41" x 1.97")
Weight	20 kg 43 lbs.

Temperature Coefficients

Voltage - T_{kvoc}	-0.29 %/C
Current - T_{klsc}	0.04 %/C
Power - T_p	-0.39 %/C

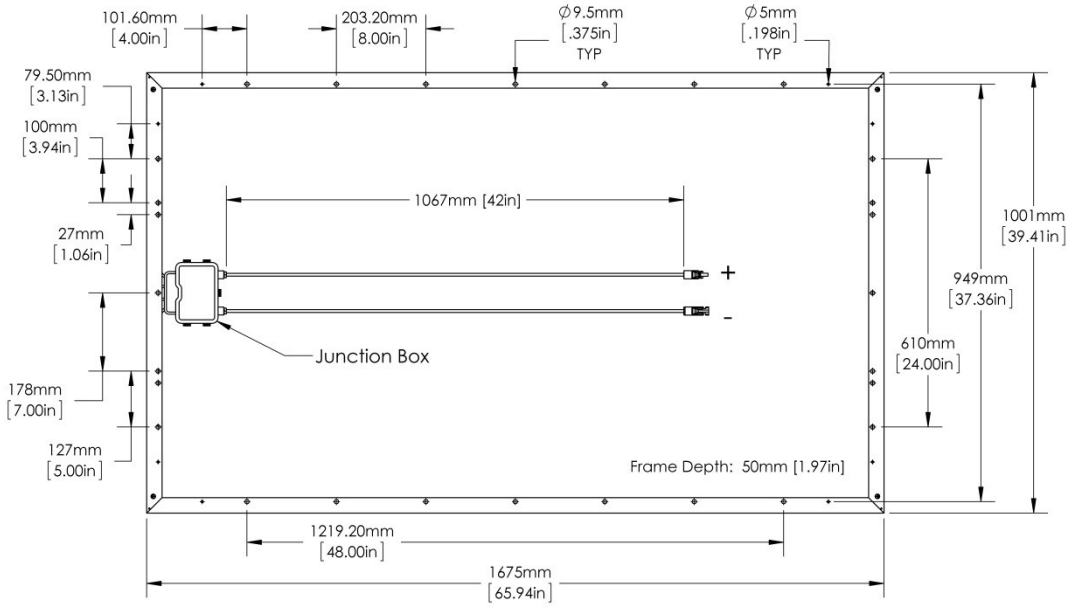

FLEXpower Radian Series

FULLY PRE-ASSEMBLED 4 AND 8KW INVERTER SYSTEMS

Three Reasons to Choose the FLEXpower Radian Integrated System from OutBack Power:

1. ENGINEERED FOR FASTER, EASIER INSTALLATION

- **Factory tested, pre-wired and pre-configured** system for fast installation
- Includes a fully integrated GS load center for quick and easy connections
- Charge controller, programming and networking components are completely integrated—just install the mounting bracket, hang the system on a wall, make the necessary connections, site specific programming and the system is fully operational
- Optimized system footprint for cleaner installations in half the time

2. DESIGNED FOR FLEXIBILITY

- **4kW**: Ideal for smaller power applications including homes, cabins, remote communication sites and backup power systems.
- **8kW**: Ideal for medium-sized power requirements including larger homes, light commercial or backup power systems.
- Radian inverter/charger is programmable for seven different operational modes, with generator assist
- Advanced Battery Charging (ABC) programmability accommodates traditional and advanced chemistry batteries

3. BUILT FOR DEPENDABLE, LONG-TERM USE

- **Extensive quality and reliability testing**
- 15 years of experience manufacturing and improving products for fault-intolerant, mission-critical applications
- Monitor, command and control from any internet-connected device with OPTICS RE
- Standard 5 year warranty (extended 10 year warranty available)
- Field-upgradable software, field-serviceable modular design and global technical support
- Components carry all of the necessary ETL certifications

FLEXpower Radian (FPR-8048A))

OutBack FLEXpower Radian Typical System Integration:

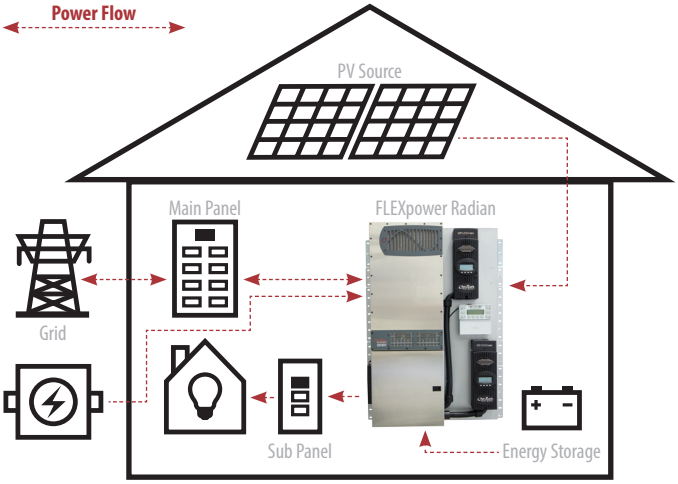

OUTBACK POWER—MASTERS OF THE OFF-GRID. FIRST CHOICE FOR THE NEW GRID.

MAKE THE POWER

- FLEXpower Integrated Systems
- Inverter/Chargers & Charge Controllers

STORE THE ENERGY

- EnergyCell RE, GH, NC and OPzV Batteries
- Battery Enclosures and Racking

MANAGE THE SYSTEM

- OPTICS RE System Monitoring and Control
- MATE3 System Display and Communications

OutBack reserves the right to make changes to the products and information contained in this document without notice.
Copyright © 2017 OutBack Power. All Rights Reserved. OutBack is a registered trademark of The Alpha Group.

Model*	Description	Inverter	GSLC	Bypass	Inverter OCPD**	PV OCPD**	GFDI	RTS	Charge Controller
FPR-4048A	GS4048A FLEXpower Radian	GS4048A	GSLC175-PV1-120/240	120/240VAC	175A	80A	Yes	Yes	(1) FLEXmax 80
FPR-8048A	GS8048A FLEXpower Radian	GS8048A	GSLC175-PV1-120/240	120/240VAC	(2) 175A	(2) 80A	Yes	Yes	(2) FLEXmax 80

Details	FLEXpower Radian 4048A	FLEXpower Radian 8048A
Finished Dimensions H x W x D (in/cm)	47.0 x 33.5 x 9.84 / 119.4 x 85.1 x 24.9	47.0 x 33.5 x 9.84 / 119.4 x 85.1 x 24.9
Weight (lb/kg)	195 / 88.5	250 / 113.4

*All pre-wired systems include a Radian Series inverter/charger, FLEXmax 80 charge controller(s), MATE3 system display and communications, FLEXnet DC system monitor, AC and DC wiring boxes, HUB10.3 communications, surge protector and remote temperature sensor (RTS). The FLEXpower Radian is also equipped with battery and PV array breakers, GFDI and input-output-bypass.
See individual product specsheets or product guide for full specifications. **Overcurrent protective device.

Radian GS8048A Power Factor Chart

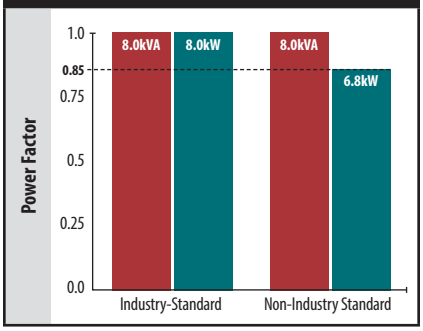

Power Rating Notes

Inverters that specify power in VA but do not use the unity standard Power Factor (PF) **could have misleading power specifications.** Volt-Amps (VA) is a total inverter output, while Watts (W) represent the power consumed by the electrical loads. PF, which varies by types of loads, is the ratio of W to VA, and the difference between the two is power in the circuit that does no useful work. At 1.0PF (unity), all power is used. This is the industry-standard used by OutBack Power.

Radian GS8048A Power Rating Chart

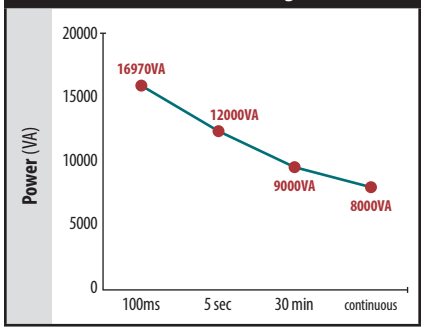

Instantaneous Power Rating
Most stringent, massive load start **GS8048A**: 16970VA

Surge Power Rating
Less stringent load start **GS8048A**: 12000VA

Peak Power Rating
Frequent "heavy duty" load requirements **GS8048A**: 9000VA

Continuous Power Rating
Sustained "real world" load requirements **GS8048A**: 8000VA

Radian GS8048A Efficiency Rating Chart

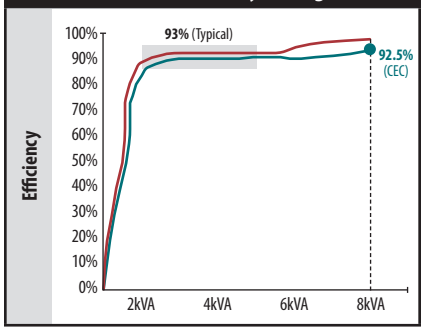

INVERTING SELLING

Typical Efficiency Rating
Real world efficiency with variable loads **GS8048A**: 93%

CEC Efficiency Rating
Most stringent US rating **GS8048A**: 92.5%

OutBack reserves the right to make changes to the products and information contained in this document without notice.
Copyright © 2017 OutBack Power. All Rights Reserved. OutBack is a registered trademark of The Alpha Group.

SUNMOD®

EZ Roof Mount™

for Shingle Roofs

MOUNTING MADE EASY

Patent #: US 8122648B

IAPMO ES®

EZ Roof Mount

. . . Save time, hassle, and callbacks by using EZ Roof Mounts for any composite shingle/cedar shake roof!

Versatile aluminum base for multiple configurations.

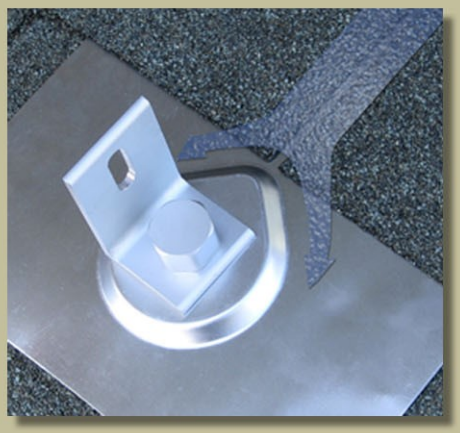

Raised flashing designed to divert water flow.

Various standoffs available for easy adjustment.

Features & Benefits

Leak-proof engineering and design with sealing point protected from elements.

Versatile mounting options including direct-to-decking for easy and quick installation.

Durable aluminum anodized finish provides exceptional resistance to corrosion and wear.

Performed flawlessly in major storm conditions.

IAPMO certified for waterproofing and structural integrity

K10068-001 Patent #: US 8122648B

All kits come complete with the following parts:

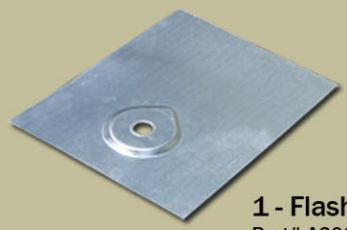

1 - Flashing
Part# A20052-001

1 - Al Shoe
Part# A20065-001

1 - Hex Cap
Part# A20066-001

1 - EZ L Foot
Part# A20064-001

1 - Lag Bolt SS 5/16 x 4.5
Part# B15015-004

1 - Bolt 3/8 - 16 x 3/4”
1 - Flange Nut 3/8”

WITHDRAWAL (PULL OUT) CAPACITIES FOR SUNMODO'S ROOF ATTACHMENT PRODUCTS

EZ Roof Mount K10068 is certified for International Building Code and International Residential Codes (IRC) by IAPMO. Evaluation Report is 0248, structural test per EC002-2011 and Rain Test per UL 441-96.

Roof Attachment Products:

Roof Penetration Count	Kit Number	Product	5/16" Lag Bolt	Self-Tapping Screw
One Screw System	K10068-XXX	EZ Roof Mount Kits	X	
	K10070-XXX		X	
	K10082-XXX	EZ Metal Roof Mount Kits	X	
	K10064-XXX		X	
	K10211-001	RidgeBridge Mount Kits	X	
	K10212-001		X	
	K10213-001		X	
Two Screw System	K10142-001	EZ Metal Roof Mount Kits		X
	K10154-001			X
	K12002-001	EZ Corrugated Metal Mount Kits		X
	K10167-001	EZ Tile Hook Kits	X	
	K10168-001		X	
	K10169-001		X	
	K10170-001		X	
	K10171-001		X	
	K10172-001		X	
	K10173-001		X	
	K10174-001		X	
	K10211-XXX	Ridge Bridge Mount Kits		X
	K10212-XXX			X
	K10213-XXX			X
Four Screw System	K10068-XXX	EZ Roof Mount Kits		X
	K10070-XXX			X
	K12003-001	EZ Corrugated Metal Mount Kits		X

Lag reference withdrawal (pull out) design capacities (lbs.) in typical lumber:	Specific Gravity	5/16" Shaft per 1" thread depth	5/16" Shaft per 2-1/2" thread depth
Douglas Fir, Larch	.50	266	665
Douglas Fir, South	.46	235	588
Engelmann Spruce, Lodgepole Pine (MSR 1650 f & higher)	.46	235	588
Hem, Fir	.43	212	530
Hem, Fir (North)	.46	235	588
Southern Pine	.55	307	768
Spruce, Pine, Fir	.42	205	513
Spruce, Pine, Fir (E of 2 million psi and higher grades of MSR and MEL)	.50	266	665

Sources: American Wood Council, NDS 2005, Table 11.2 A, 11.3.2 A

Notes:

1) Actual test data in Southern Pine: Test Load at 0.250 inch deflection: 1,800 lbs. uplift (withdrawal); 240 lbs. lateral. Test Load at 0.125 inch deflection: 695 lbs. uplift (withdrawal); 130 lbs. lateral. See Uniform Evaluation Service Report 0248 for allowable load values and conditions.
2) Thread must be embedded in a rafter or other structural roof member.
3) See NDS Table 11.5.1 C for required spacing requirements, edge and end distances. See NDS Table 10.3.1 for all applicable adjustment factors.

The PSF Corporation, a Nationally Recognized Laboratory, has tested our 4 screw mounting using four #15 screws into 1/2" 3 ply CDX plywood deck. The average maximum withdrawal resistance, pull out, value reported is 1147 lbf. Screw manufacturers such as Simpson, OMG and most others have pull out values listed for their product. Consult your structural engineer to select the appropriate fasteners for your application.

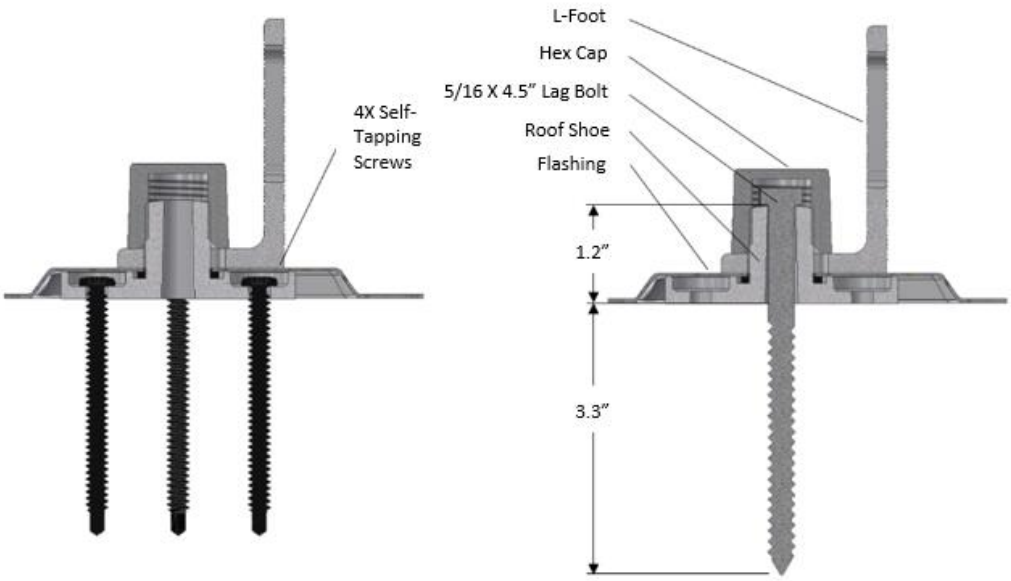

Cross section of EZ Roof mount attachment for composite roofs. Self-tapping screw, deck mounting, shown on the left. 4.5" lag bolt, rafter mounting, shown on the right.

EZ Roof Mount Attachments
With L-Foot, Standoffs and Variants

Copyright 2017

Please read carefully before installing

Patent # US8122648B

SunModo's EZ Roof Mount Attachments can be used to mount PV panels on pitch roofs.
All installations shall be in accordance with NEC requirements in the USA.

Table of Contents

Installer Responsibility: 3
Safety: 3
Specifications: 3
Lag Pull-Out Capacities: 3
EZ Roof Mount Series: 4
Primary Materials: 5
Tools Required for Installation: 8
Torque Values: 9
Flashing Placement: 10
Sealant Application: 10
Installation Instructions: 11
EZ Roof Mount Kit K10068-XXX 11
EZ Roof Mounting Standoff Kit K10070-XXX 12
EZ Roof Mount with C-Bracket Kit K12005-001 12
Optional Mounting Instructions: 13
EZ Roof Mount Kit K10068-BK7 13

SunModo Corporation: Vancouver, Washington www.SunModo.com Ph: 360-844-0048 info@sunmodo.com	Document Number D10011-V006 ©2017 – SunModo Corp.	IAPMO ES File 0248

Installer Responsibility:

Before ordering and installing materials, all system layout dimensions should be confirmed by field measurements. SunModo reserves the right to alter, without notice, any details, proposals or plans. Any inquiries that you may have concerning installation of the PV system should be directed to your SunModo Sales representative. Consult SunModo Sales for any information not contained in this manual. This manual is intended to be used as a guide when installing SunModo's EZ Roof Mount System on pitched roofs. It is the responsibility of the installer to ensure the safe installation of this product as outline herein.

- Installer shall guarantee that screws and anchors have adequate pullout strength and shear capacities.
- Installer shall adhere to the torque values specified in this Instruction Manual.
- Installer shall use anti-seize compound, such as Permatex anti-seize, lubricant is recommended for all threaded parts.
- Installer is responsible to install EZ Roof Mount System over a Fire Resistant roof covering rated for the application.
- Installer is responsible to determine that the roof, its rafters, connections, and other architectural support components can sustain the array under all code level loading conditions.
- Installer shall adhere to all relevant local or national building codes. This takes account of those that supplant this document's requirements.
- Installer shall guarantee the safe placement of all electrical details of the PV array.
- Installer shall comply with all applicable local, state and national building codes, including periodic re-inspection of the installation for loose components, loose fasteners and any corrosion, such that if found, the affected components are to be immediately replaced.

Safety:

Review relevant OSHA and other safety standards before following these instructions. The installation of solar PV systems is a dangerous procedure and should be supervised by trained and experienced personnel.

It is not possible for SunModo to be aware of all the possible job site situations that could cause an unsafe condition to exist. The installer of the roof system is responsible for reading these instructions and determining the safest way to install the roof system. These instructions are provided only as a guide to show a knowledgeable, trained erector the correct part placement one to another. If following any of the installation steps would endanger a worker, the erector should stop work and decide upon a corrective action. Provide required safety railing, netting, or safety lines for crew members working on the roof.

Specifications:

EZ Roof Mount K10068 is certified for International Building Code and International Residential Codes (IRC) by IAPMO. Evaluation Report is 0248, structural test per EC002-2011 and rain test per UL 441-96.

Lag Pull-Out Capacities:

Sources: American Wood Council, NDS 2005, Table 11.2 A, 11.3.2 A

Lag pull-out (withdrawal) capacities (lbs.) in typical lumber:	Specific Gravity	5/16" Shaft per 1" thread depth	5/16" Shaft per 2-1/2" thread depth
Douglas Fir, Larch	.50	266	665
Douglas Fir, South	.46	235	588
Engelmann Spruce, Lodgepole Pine (MSR 1650 f & higher)	.46	235	588
Hem, Fir	.43	212	530
Hem, Fir (North)	.46	235	588
Southern Pine	.55	307	768
Spruce, Pine, Fir	.42	205	513
Spruce, Pine, Fir (E of 2 million psi and higher grades of MSR and MEL)	.50	266	665

Notes:

1) Actual test data in Southern Pine: Test Load at 0.250 inch deflection: 1,800 lbs. uplift (withdrawal); 240 lbs. lateral. Test Load at 0.125 inch deflection: 695 lbs. uplift (withdrawal); 130 lbs. lateral.

2) Thread must be embedded in a rafter or other structural roof member.

3) See NDS Table 11.5.1 C for required edge distances.

EZ Roof Mount Series:

EZ Roof Mount Kit includes:

- Flashing
- L-Foot
- Roof Shoe and Gasket
- 4” Lag Bolt
- AL Hex Cap
- 3/8” Flange Nut and Bolt

K10068-XXX
EZ Roof Mount with L-Foot
(-001 as shown)

EZ Roof Mount Decking Kit:

- Flashing
- L-Foot
- Roof Shoe and Gasket
- 4X 1/4 X 3” Decking Screw
- AL Hex Cap
- 3/8” Flange Nut and Bolt

K10068-B20
EZ Roof Mount with L-Foot
(Black as shown)

EZ Roof Mount Standoff Kit:

- Flashing
- Roof Shoe and Gasket
- 4” Lag Bolt
- AL Hex Cap
- 3/8” Flange Nut and Bolt
- Standoff: 2” shown

K10070-XXX
EZ Roof Mount with Standoff
(Standoff heights: 2”, 3”, 5” and 7”)

EZ Roof Mount C-Bracket Kit:

- Flashing
- Roof Shoe and Gasket
- 4” Lag Bolt
- AL Hex Cap
- 3/8” Flange Nut and Bolt

K12005-001
EZ Roof Mount Kit with C-Bracket

EZ Roof Mount Conduit Kit:

- Flashing
- L-Foot
- Roof Shoe and Gasket
- 4” Lag Bolt
- AL Hex Cap
- 3/8” Flange Nut and Bolt
- Conduit Clamp

K10205-001
EZ Roof Mount Kit, 1" Conduit

K10205-002
EZ Roof Mount Kit, 3/4" Conduit

Primary Materials:

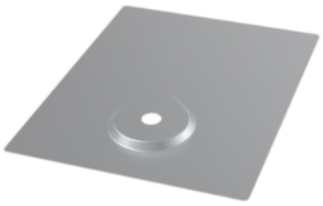	Aluminum Flashings are offered in two sizes: 10”X12.5” and 18”X18”. Available in clear, black and brown anodize.	A20052-XXX AL Flashing
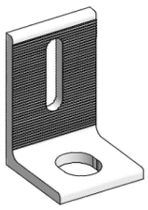	Aluminum L-Foot is offered in clear, black and brown.	A20064-XXX AL L-Foot
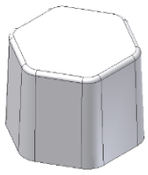	AL Hex Cap Available in clear and black	A20066-001 and -BK1 AL Hex Cap
	Aluminum Shoe is provided with EPDM Sealing Washer installed.	A20065-001 AL Shoe C10006-001 Sealing Washer
	5/16 Stainless Steel Lag Bolts are available lengths: 3.5”, 4”, 4.5” and 5”	B15015-XXX 5/16 Stainless Steel Lag Bolt
	OMG XHD (Extra Heavy Duty) #15 Roofing Fastener	B15040-001 (4 reqd per mount) OMG 1/4 X 3" Decking Screw XHD003B #15X3
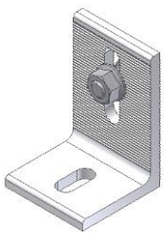	Aluminum L-Foot available in clear and black.	K10066-XXX Standard L-Foot Kit K10096-XXX Tall L-Foot Kit (3/8” Flange Nut and Bolt included)

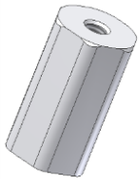	Aluminum Standoff heights: 2”, 3”, 5” and 7” (part of EZ Roof Kit K10070-XXX)	A20049-XXX Standoff (multiple lengths)
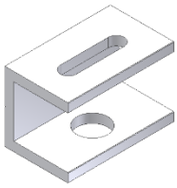	Aluminum C-Bracket (part of EZ Roof Kit K12005-001)	A22001-001 C-Bracket
	Conduit Clamp for 3/4” and 1” diameter conduit	A20212-001 1” Conduit Clamp A20213-001 3/4” Conduit Clamp
	Conduit Mount L-Foot	A20064-004 Conduit Mount L-Foot
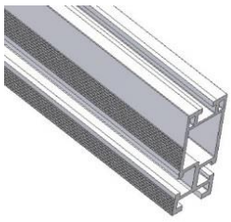	Helio Rails: Features both 1/4” and 3/8” side slots, and 1/4” top slot for clamping PV panels. Available in 84”, 124”, 164” and 206” lengths. Last 3 digits denote rail length. 4 stock sizes in clear and black.	A20144-XXX (Clear) A20144-XXX-BK (Black) HR250 (Standard Rail) A20145-XXX (Clear) A20145-XXX-BK (Black) HR350 (Heavy Rail) A20146-XXX (Clear) A20146-XXX-BK (Black) HR500 (Super Rail)
	Rail End Caps available for Helio Standard and Heavy rails (optional)	C10017-001 (Black) C10017-001-GR (Gray) Helio Standard C10021-001 (Black) C10021-001-GR (Gray) Helio Heavy
	Metal Rail End Caps available for Helio Standard and Heavy rails (optional)	A20284-001 A20284-BK1 (Black) HR250 (Helio Standard) A20285-001 HR350 (Helio Heavy) A20263-001 HR500 (Helio Super)

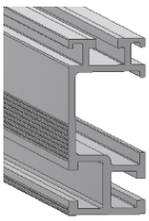	HR150 (Open Rail): Features wire management channel and both 1/4” and 3/8” side slots, and 1/4” top slot for clamping PV panels. Available in 84”, 124”, 164” and 206” lengths. Last 3 digits denote rail length. 4 stock sizes in clear and black.	A20242-XXX (Clear) A20242-XXX-BK (Black) HR150 (Open Rail)
	1/4” Slot Open Rail Splice Kit with 4X 1/4-20 Bolts and Flange Nuts with integral grounding**. *May be repositioned until torqued to final value.***	K10236-001 HR150 Splice Kit **For single-use only**
	Rail End Cap available for HR150 rails (optional)	A20250-001 (Clear) A20250-BK1 (Black) HR150 Rail End Cover
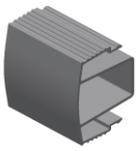	HR150 Channel Clip: snaps into the open rail to manage wire bundles where needed. Available in clear and black.	A20252-001 (Clear) A20252-BK1 (Black) HR150 Wire Cover

The HR150 family of products are shown assembled above. Two HR150 Rails are spliced together with an HR150 Rail Splice. PV electrical wires are shown routed in the channels of the HR150 Rails, retained with two HR150 Channel Clips snapped into place.

Tools Required for Installation:

Electric Drill or impact driver. Note that the use of an impact driver is strongly discouraged for all stainless nut and bolt hardware.

Roofing Bar

Drill Bit for lag bolts, pilot hole 7/32” diameter for 5/16” lag bolt

3/8” Socket Wrench

Sockets for 3/8” drive sockets, 7/16”, 1/2”, 9/16” and 1-1/16”

Torque Wrench 3/8” drive, 0 to 35 ft. lbs.

Anti-seize compound (Permatex 80071 or equivalent).

Caulk gun and silicon sealant

- **ChemLink M1 (or equivalent) for wood and composite roofs.**
- **ChemLink DuraLink (or equivalent) for metal roofs.**

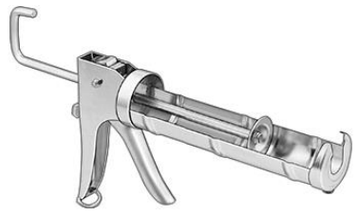

Tape measure

Saws for cutting aluminum posts and rails as necessary

Other items that can be useful:

- **Chalk or roofer's marker to layout roof.**
- **Adaptor for 3/8" socket to drill chuck.**
- **#3 Phillips bit**

Torque Values:

These values must be adhered to for mechanical strength. It is required that a torque wrench be used to measure the bolt torque during final assembly, and it is recommended that anti-seize compound, such as Permatex, be applied to the screw threads.

Hardware	Torque
1/4" Bolts and Hex Flange Nuts	7.5 ft. lbs.
1/4 X 3" Decking Fastener	As Required
5/16 X 4" Lag Bolt	25 ft. lbs.
3/8" Bolts and Hex Flange Nuts	15 ft. lbs.
3/8" T-Bolts and Hex Flange Nuts	15 ft. lbs.
Mid or End Clamp, 1/4-20 Female Standoff with 7/16" Hex Head Collar Nut	7.5 ft. lbs.
Ground Lug: 1/4" Flange Nut with 7/16 hex drive head	7.5 ft. lbs.
Ground Lug: 1/4" setscrew with1/8 Allen drive	4.2 ft. lbs. (50 in. lbs.)
HEX Cap: 1-1/16" socket	15 ft. lbs.

Note: We strongly recommend against the use of an impact wrench except for the installation of the Lag Bolts.

Flashing Placement:

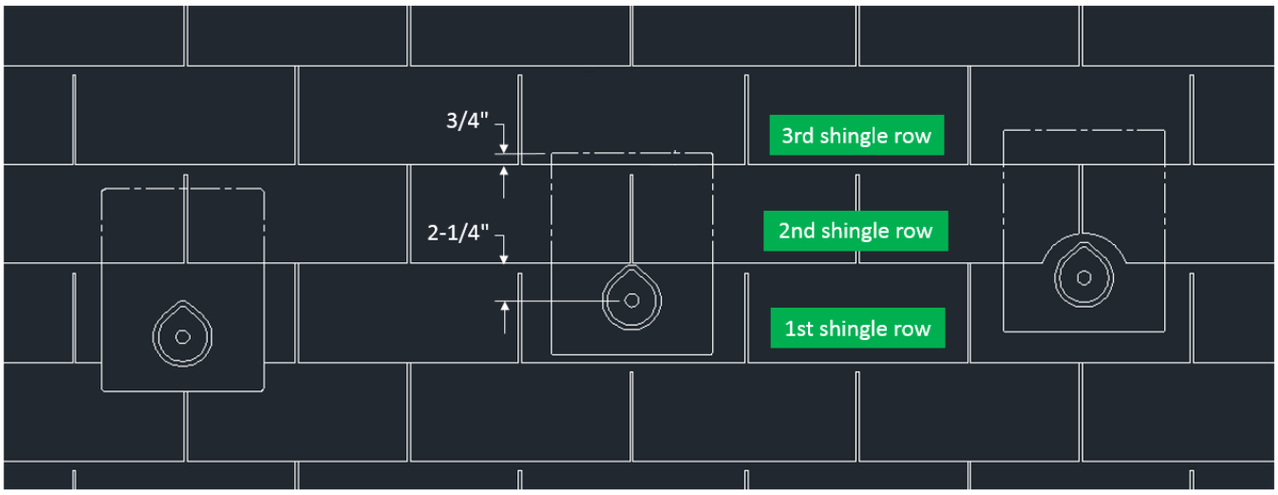

INCORRECT Position
Moisture and debris can accumulate causing early shingle degradation

CORRECT Position
No shingle cutting required

Acceptable Position
If shingle cutting is required a 1/2" gap between the raised feature of the Flashing and the shingle is recommended

If cutting the shingle to reposition the flashing proves to be impractical, apply sealant around the edges of the flashing to prevent debris from accumulating under the shingle.

Sealant Application:

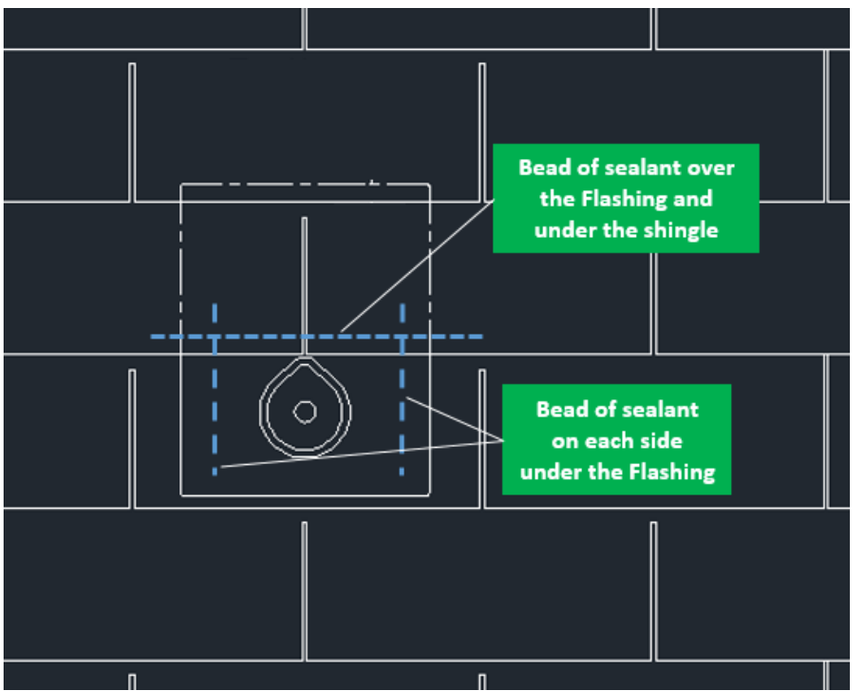

Installation Instructions:

EZ Roof Mount Kit K10068-XXX

1. From the marked location, move down the roof 2-1/4" from the bottom of the shingle, and drill the pilot hole for the Lag Bolt with a 7/32" drill bit. For maximum strength, the hole should not be more than 3" in depth, and a drill stop may be used to insure this.

2. Clean sawdust, and fill hole with sealant, such as Chem-link M1 for wood and composite roofs, or ChemLink DuraLink for metal roofs. Install AL Shoe to roof by using 5/16" Lag Bolt. Tighten to 25 ft. lbs. torque.

3. Make sure the Sealing Washer is positioned correctly on the threaded shank of the AL Shoe. Use roofer bar to lift roof shingle, slide the flashing under shingle, and insert the Flashing on threaded shank as shown. For additional waterproofing apply beads of sealant as shown.

4. Insert L-Foot to AL Shoe on top of Flashing. Place AL Hex Cap on Shoe, and lightly hand tighten Hex Cap.

5. Install AL Rail to L-Foot to the specific orientation. Then, tighten 3/8" Flange Nut to 15 ft-lbs. and Hex Cap to 15 ft-lbs. torque.

Installation Instructions

EZ Roof Mounting Standoff Kit K10070-XXX

Mount the AL Shoe using steps 1-3 (shown above).

A. Place AL Standoff on AL Shoe threads and tighten by hand, then by wrench. Use 15 ft.-lbs. nominal torque.

B. Using the 3/8" Flange Bolt (supplied with AL L-Foot) attach to the top of the Standoff.

C. Install AL Rail to L-Foot to the specific orientation. Then, tighten 3/8" Flange Nut to 15 ft-lbs. and Hex Cap to 15 ft-lbs. torque.

Installation Instructions

EZ Roof Mount with C-Bracket Kit K12005-001

Mount the C-Bracket using steps 1-3 (shown above).

D. Mount the C-Bracket instead of an L-Foot, using the Hex Nut. The C-Bracket can be used to mount a variety of rails and other rooftop equipment.

Optional Mounting Instructions:

EZ Roof Mount Kit K10068-B20

1. From the desired location, move down the roof 2-1/4" from the bottom of the shingle, and locate the EZ Roof Mount AL Shoe center. The AL Shoe will be used as a template to locate the 4 screws.

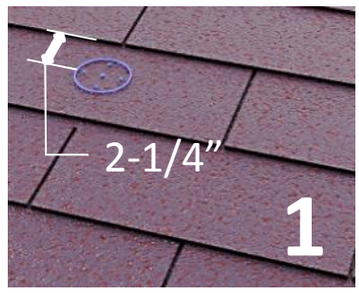

2. Place a bead of Chem-link M1 for wood and composite roofs along the length of the screw four (4) 1/4" X 3" self-drilling Decking Screws. Mount the AL Shoe to the roof through the shingles using the four Decking Screws. The screws will penetrate the roof sheathing and should protrude through the sheathing at least 1/2". Maximum pullout strength requires that the threads extend below the sheathing.

3. Make sure the Sealing Washer is positioned correctly on the threaded shank of the AL Shoe. Use roofer bar to lift roof shingle, slide the flashing under shingle, and insert the Flashing on threaded shank as shown. For additional waterproofing apply beads of sealant as shown.

4. Insert L-Foot to AL Shoe on top of Flashing. Place AL Hex Cap on Shoe, and lightly hand tighten Hex Cap.

5. Install AL Rail to L-Foot to the specific orientation. Then, tighten 3/8" Flange Nut to 15 ft-lbs. and Hex Cap to 15 ft-lbs. torque.

Warning: The self-drilling decking screw mount option is only suitable for roofs less than 5/12 pitch and should only be used with a direct L-Foot attachment.

See www.sunmodo.com for current warranty documents and information.

SunModo Corporation
Ph: 360-844-0048

SECTION 12 44 00

Toilet Paper Holder

PRIMARY POST MOUNT
MONTANT PRINCIPAL / MONTAJE DEL POSTE PRINCIPAL

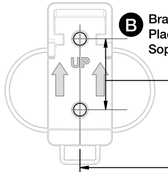

B Bracket
Plaque de fixation
Soporte

13/16"
(20 mm)

TISSUE HOLDER
PORTE-PAPIER HYGIÉNIQUE
PORTAPAPEL HIGIÉNICO

DELTA

see what Delta can do™

Everly™

TEMPLATE / GABARIT / PLANTILLA

18" TOWEL BAR
PORTE-SERVIETTE DE 46 CM (18 PO)
TOALLERO DE 18" (53 CM)

24" TOWEL BAR
PORTE-SERVIETTE DE 61 CM (24 PO)
TOALLERO DE 24" (68 CM)

7-17/32" (191.6 mm)

20-3/4" (527.2 mm)

26-3/4" (679.6 mm)

BEFORE YOU BEGIN / AVANT DE COMMENCER / ANTES DE COMENZAR

- **For ease of installation, READ through ALL instructions before you begin.**
- **Pour faciliter l'installation, LISEZ TOUTES les instructions avant de commencer.**
- **Para facilitar la instalación, LEA TODAS las instrucciones antes de comenzar.**

REQUIRED TOOLS / OUTILS REQUIS / HERRAMIENTAS NECESARIAS

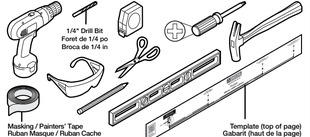

MOUNTING HARDWARE (INCLUDED) / QUINCAILLERIE DE MONTAGE (FOURNIE) / ACCESORIOS PARA EL MONTAJE (INCLUIDOS)

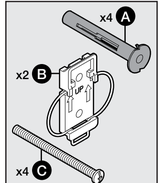

These installation instructions are for typical 1/2" drywall. Mounting hardware for wood, tile or stucco installation is not included.
- For wood stud installation, use #6 x 1-1/4" wood screws.
- For tile or stucco, use appropriate anchors and follow manufacturer's installation instructions.

Ces instructions d'installation sont destinées aux cloisons sèches de 1/2 po. La quincaillerie de montage pour le bois, les carreaux ou le stuc n'est pas fournie.
- Pour une installation sur montant en bois, utilisez des vis à bois n°6 x 1-1/4 po.
- Pour les carreaux ou le stuc, utilisez des ancrages appropriés et suivez les instructions du fabricant.

Estas instrucciones de instalación son para un panel de pared típico de 1/2". Los accesorios para el montaje en madera, baldosa o estuco no se incluyen.
- Para la instalación en montante de madera, utilice tornillos para madera #6 de 1-1/4".
- Para la instalación en baldosa o en estuco, utilice anclajes adecuados y siga las instrucciones de instalación del fabricante.

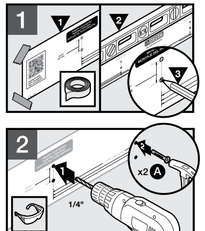

1) Identify holes on template for your item and secure template to wall with tape. 2) Make sure template is level. 3) Mark holes.

1) Identifiez les trous de votre article sur le gabarit et fixez le gabarit au mur avec du ruban adhésif. 2) Vérifiez que le gabarit est de niveau. 3) Marquez les trous.

1) Identifique los agujeros en la plantilla para su artículo, y asegure la plantilla a la pared con cinta. 2) Asegure que la plantilla esté nivelada. 3) Marque los agujeros.

1) Drill 1/4" pilot holes at marked locations. 2) Gently tap in wall anchors (A) with a hammer.

1) Percez des avant-trous de 1/4 po aux emplacements marqués. 2) Enfoncez doucement les ancrages muraux (A) à l'aide d'un marteau.

1) Perfore agujeros piloto de 1/4" en los lugares marcados. 2) Introduzca delicadamente los anclajes de la pared (A) con un martillo.

1) Place bracket (B) on wall with arrows pointing up. 2) Using a screwdriver, turn screws (C) clockwise approximately FIFTY (50) TURNS.

1) Placez la plaque de fixation (B) contre le mur en pointant les flèches vers le haut. 2) À l'aide d'un tournevis, visez les vis (C) dans le sens horaire en effectuant approximativement CINQUANTE (50) TOURS.

1) Coloque el soporte (B) sobre la tornillos (C) hacia la derecha aproximadamente CINCUENTA (50) VUELTAS.

IMPORTANT: Turning screws approximately FIFTY (50) TURNS will make for a secure fit by fully engaging the anchors.

IMPORTANT: Visser les vis en effectuant approximativement CINQUANTE (50) TOURS permettra une fixation solide en engageant les ancrages à fond.

IMPORTANTE: Al girar los tornillos aproximadamente CINCUENTA (50) VUELTAS se logrará un ajuste seguro con el despliegue completo de los anclajes.

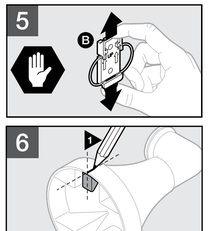

STOP! Make sure bracket is tight against wall. If it is loose, revisit Step 3.

STOP! Vérifiez que les plaques de fixation sont fermement fixées au mur. Si elles ont du jeu, reprenez l'étape 3.

¡ALTO! Asegure que los soportes estén ceñidos contra la pared. Si están sueltos, vuelva al Paso 3.

1) Mark center of post with pencil or other temporary marking tool.

1) Marquez le centre du support à l'aide d'un crayon ou de tout autre outil de marquage temporaire.

1) Marque el centro del poste con lápiz u otra herramienta para hacer marcas temporales.

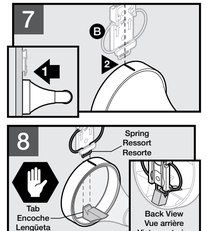

1) Place post flat against wall, directly below bracket. 2) Align mark with center of bracket (B).

1) Placez le support à plat contre le mur, juste sous la plaque de fixation. 2) Alignez la marque sur le centre de la plaque de fixation (B).

1) Coloque el poste contra la pared, directamente debajo del soporte. 2) Alinee la marca con el centro del soporte (B).

STOP! Before proceeding, become familiar with how bracket spring catches on post tab.

Stop! Avant de commencer, familiarisez-vous avec la façon dont le ressort de la plaque de fixation s'accroche sur l'encoche du support.

¡Alto! Antes de proceder, familiarícese con la forma en que el resorte del soporte se traba en la lengüeta del poste.

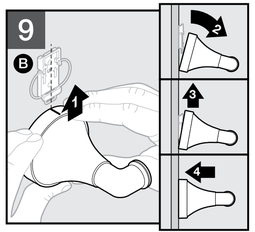

1) While sliding post up wall, 2) slightly tilt post to clear bottom of bracket. 3 With moderate force, push post up so it clears top of bracket. **NOTE:** For best results, apply pressure with both thumbs directly under post base. 4) Finally, push post flat against wall; it will snap securely onto the bracket.

1) Tout en faisant glisser le support de bas en haut contre le mur, 2) inclinez légèrement le support pour libérer le bas de la plaque de fixation 3) Poussez le support vers le haut en appliquant une force modérée de façon qu'il libère le sommet de la plaque de fixation. **Remarque :** pour un résultat optimal, appliquez une pression simultanée des deux pouces directement sous la base du support. 4) Enfin, poussez le support à plat contre le mur ; il s'enclenchera de façon sécuritaire sur la plaque de fixation.

1) Mientras desliza el poste hacia arriba sobre la pared, 2) incline ligeramente el poste para pasar sobre la parte inferior del soporte. 3) Ejerciendo fuerza moderada, empuje el poste hacia arriba de manera que pase sobre la parte superior del soporte. **Nota:** Para obtener mejores resultados, aplique presión con ambos pulgares directamente bajo la base del poste. 4) Finalmente, empuje el poste contra la pared; encajará y quedará asegurado sobre el soporte.

WARNING INSTRUCTIONS / MISE EN GARDE / ADVERTENCIA E INSTRUCCIONES

Wear safety goggles.

WARNING: This item is not designed for use as a grab bar. **DO NOT** mount in locations where product is likely to be used as a grab bar.

WARNING: Use caution when drilling into walls to avoid drilling into electrical and plumbing lines hidden within wall.

Portez des lunettes de sécurité.

MISE EN GARDE: Cet article n'est pas conçu pour être utilisé comme barre d'appui. **NE PAS** installer à des endroits où le produit sera probablement utilisé comme une barre d'appui.

MISE EN GARDE: Lorsque vous percez dans des murs, faites attention d'éviter de percer dans les conduits électriques ou la plomberie dissimulés dans le mur.

Use gafas de seguridad.

ADVERTENCIA: Este artículo no está diseñado para usarse como una barra de soporte. **NO** lo monte en ubicaciones donde el producto pudiera ser usado como tal.

ADVERTENCIA: Tenga precaución al taladrar las paredes para evitar taladrar tuberías eléctricas o de plomería escondidas dentro de éstas.

CARE INSTRUCTIONS / CONSIGNES D'ENTRETIEN / INSTRUCCIONES SOBRE EL CUIDADO

Care should be given to the cleaning of this product. Although its finish is extremely durable, it can be damaged by harsh abrasives or polish. To clean, simply wipe gently with a damp cloth and blot dry with a soft towel.

Il faut faire attention à la façon dont ce produit est nettoyé. Bien que la couche de finition soit extrêmement résistante, elle peut être endommagée avec des abrasifs ou des produits nettoyants trop puissants. Pour nettoyer, essuyer sans frotter avec un tissu humide et sécher avec une serviette douce.

Se debe tener cuidado con la limpieza de este producto. Aunque su acabado es extremadamente resistente, puede ser dañado por abrasivos o pulimentos ásperos. Para limpiarla, simplemente frote con un paño húmedo y séquela con una toalla suave.

LIMITED LIFETIME WARRANTY

Subject to the terms of this warranty, Liberty Hardware® Manufacturing Corporation ("Liberty Hardware") warrants to the original consumer purchaser ("You") that the product will be free from defects in material and workmanship. If the product does not comply with this warranty, Liberty Hardware will repair or replace the product or, at Liberty Hardware's option, refund the purchase price. Repair, replacement, or refund of the original purchase price is your sole remedy under this or any other warranty on the product, whether expressed or implied.

Limited Warranty Period. The warranty period is for the lifetime of the product and begins on the date of the initial installation of the product for residential purposes.

Limitations on the Warranty. The warranty does not cover: (a) normal wear and tear; (b) damage through abuse, neglect, misuse, or as a result of any accident or act of God; (c) improper installation or maintenance; (d) commercial, industrial, institutional or other nonresidential use; or (e) products altered without Liberty Hardware's prior written consent. This warranty is not transferable.

Obligations of Purchaser. If this product does not meet its warranty, return the product (postage prepaid) to the distributor or retailer from which it was purchased with proof of purchase and a written claim briefly describing the defect. You may be required to provide other information or evidence of the defect. Any returned product that is replaced or refunded becomes the property of Liberty Hardware.

Limitations on Implied Warranties. IMPLIED WARRANTIES, INCLUDING ANY WARRANTY OF MERCHANTIBILITY OR FITNESS FOR A PARTICULAR PURPOSE, ARE LIMITED TO THE SAME DURATION AS THIS EXPRESS WARRANTY; OTHERWISE, LIBERTY HARDWARE DISCLAIMS ALL WARRANTIES, EXPRESS OR IMPLIED. Some states do not allow limitations on how long an implied warranty lasts, so the above limitation may not apply to You.

Disclaimer. NO OTHER EXPRESS WARRANTY HAS BEEN MADE OR WILL BE MADE ON BEHALF OF LIBERTY HARDWARE WITH RESPECT TO THE PRODUCT. LIBERTY HARDWARE SHALL NOT BE RESPONSIBLE FOR SPECIAL, INCIDENTAL OR CONSEQUENTIAL DAMAGES WHETHER ARISING OUT OF BREACH OF WARRANTY, BREACH OF CONTRACT, OR OTHERWISE. Some states do not allow the exclusion of incidental or consequential damages of an implied warranty so the above exclusion and limitation may not apply to You.

State Law. This warranty gives you specific legal rights, and You also may have other rights, which vary from state to state.

Inquiries: 140 Business Park Dr. • Winston-Salem, NC, USA 27107
1-800-542-3789

RENSEIGNEMENTS SUR LA GARANTIE

Sous réserve des conditions de cette garantie, Liberty Hardware® Manufacturing Corporation (« Liberty Hardware ») garantit à l'acheteur d'origine (« Vous ») que le produit n'aura pas de vice de matériaux et de fabrication. Si le produit ne se conforme pas à cette garantie, Liberty Hardware réparera ou remplacera le produit ou, au choix de Liberty Hardware, remboursera le prix d'achat. La réparation, le remplacement ou le remboursement du prix d'achat original est votre seul et unique recours au titre de cette garantie ou de toute autre garantie du produit, qu'elle soit explicite ou implicite.

Période de garantie limitée La période de garantie est pour la durée de vie du produit et commence à la date de la première installation du produit à des fins résidentielles.

Limitations de la garantie. Cette garantie ne couvre pas : (a) usure normale ; (b) les dommages résultant d'un mauvais traitement, d'une négligence, d'une mauvaise utilisation ou de tout accident ou catastrophe naturelle ; (c) mauvaise installation ou mauvais entretien ; (d) utilisation commerciale, industrielle, institutionnelle ou non résidentielle ; ou (e) produits modifiés sans l'autorisation préalable par écrit de Liberty Hardware. Cette garantie n'est pas transférable.

Obligations de l'acheteur. Si ce produit n'est pas conforme à sa garantie, renvoyez-le (affranchi) au concessionnaire ou détaillant où le produit a été acheté, accompagné de la preuve d'achat et d'une réclamation par écrit décrivant brièvement le défaut. Il se peut que l'on vous demande de fournir d'autres "renseignements ou preuves du défaut. Tout produit renvoyé qui a été remplacé ou remboursé devient la propriété de Liberty Hardware.

Limitations des garanties implicites. LES GARANTIES IMPLICITES, NOTAMMENT TOUTE GARANTIE DE QUALITÉ MARCHANDE OU D'ADAPTATION À UN USAGE PARTICULIER, SONT LIMITÉES PAR LA MÊME DURÉE QUE CETTE GARANTIE EXPLICITE ; AUTREMENT, LIBERTY HARDWARE DÉSAVOUE TOUTES LES GARANTIES EXPRESSES OU IMPLICITES. Certains États ne permettant pas de limites sur la durée d'une garantie implicite, les limitations ci-dessus ne sont peut-être pas applicables.

Avis de non-responsabilité. AUCUNE AUTRE GARANTIE EXPLICITE N'A ÉTÉ FAITE OU NE SERA FAITE AU NOM DE LIBERTY HARDWARE RELATIVEMENT À CE PRODUIT. LIBERTY HARDWARE NE SERA EN AUCUN CAS RESPONSABLE DES DOMMAGES SPÉCIAUX, INDIRECTS OU ACCESSOIRES QU'ILS SOIENT PROVOQUÉS PAR UNE INOBSERVATION DE GARANTIE, UNE RUPTURE DE CONTRAT OU AUTRE. Certains États ne permettant pas l'exclusion de dommages accessoires ou indirects d'une garantie implicite, par conséquent, les exclusions et limitations ci-dessus ne sont peut-être pas applicables.

Droit national : Cette garantie vous confère des droits précis auxquels peuvent s'ajouter d'autres droits variant d'un État à l'autre ou d'une province à l'autre.

Pour tous renseignements: 140 Business Park Dr. • Winston-Salem, NC, USA 27107
1-800-542-3789

INFORMACIÓN DE LA GARANTÍA

Sujeto a las condiciones de esta garantía, el fabricante Liberty Hardware® Manufacturing Corporation ("Liberty Hardware") le garantiza al comprador original ("Usted") que el producto no tendrá ningún defecto en los materiales ni en la mano de obra. Si el producto no cumple con esta garantía, Liberty Hardware reparará o remplazará el producto o, a decisión de Liberty Hardware, le reembolsará el costo de la compra. Su único remedio bajo esta u otra garantía del producto, bien sea explícita o implícita, es la reparación, el reemplazo o el reembolso de la compra original.

Plazo de la Garantía Limitada. El plazo de la garantía es por la vida del producto y empieza en la fecha en que se instala por primera vez para usos residenciales.

Limitaciones de la Garantía. Esta garantía no cubre: (a) el uso y desgaste normal; (b) los daños causados por abuso, negligencia, uso indebido u ocasionados por un accidente o caso fortuito; (c) la instalación o mantenimiento indebido; (d) el uso comercial, industrial, institucional u otro que no sea el residencial; o (e) la alteración de productos sin el permiso previo por escrito de Liberty Hardware. Esta garantía no es transferible.

Obligaciones del Comprador. Si este producto no cumple con su garantía, devuelva el producto (con el franqueo prepagado) al distribuidor o vendedor en donde compró el producto con un recibo de la venta y un reclamo que describa brevemente el defecto. También podría tener que proporcionar otra información o comprobante del defecto. Cualquier producto devuelto que sea reemplazado o reembolsado se convertirá en propiedad de Liberty Hardware.

Limitaciones en Garantías Implícitas. LAS GARANTÍAS IMPLÍCITAS, INCLUYENDO CUALQUIER GARANTÍA DE COMERCIABILIDAD O IDONEIDAD PARA UN PROPÓSITO EN PARTICULAR, ESTÁN LIMITADAS A LA MISMA DURACIÓN DE ESTA GARANTÍA EXPLÍCITA; DE LO CONTRARIO, LIBERTY HARDWARE RENUNCIA A TODAS LAS GARANTÍAS, EXPLÍCITAS O IMPLÍCITAS. Algunos estados no permiten limitaciones en la duración de las garantías implícitas, y por lo tanto esta limitación descrita podría no aplicarle a Usted.

Renuncia. NINGUNA OTRA GARANTÍA EXPLÍCITA HA SIDO HECHA O SERÁ HECHA EN NOMBRE DE LIBERTY HARDWARE EN CUANTO AL PRODUCTO. LIBERTY HARDWARE NO SERÁ RESPONSABLE POR DAÑOS ESPECIALES, FORTUITOS O CONSECUENTES SI RESULTAN O NO DEL INCUMPLIMIENTO DE LA GARANTÍA O DEL INCUMPLIMIENTO DEL CONTRATO, O DE OTRAS. Algunos estados no permiten la exclusión de daños fortuitos o consecuentes en una garantía implícita, y por lo tanto la exclusión y limitación descrita podrían no aplicarle a Usted.

Ley Estatal. Esta garantía le da a usted derechos legales especificos y Usted también podría tener otros derechos, los cuales varian de un estado al otro.

Informes: 140 Business Park Dr. • Winston-Salem, NC, USA 27107
1-800-542-3789

Watch Video for Helpful Tips!

Regardez la vidéo pour apprendre des astuces utiles!

¡Vea consejos útiles en el video!

DELTA

140 Business Park Drive • Winston-Salem, NC 27107
www.libertyhardware.com

©2016 Liberty Hardware Manufacturing Corporation, A MASCO COMPANY

CP2548025
REV 01/25/2016

SECTION 12 44 00

Towel bar

TECHNICAL DATA

Futura®

18 in., 24 in. & 30 in. TOWEL BAR

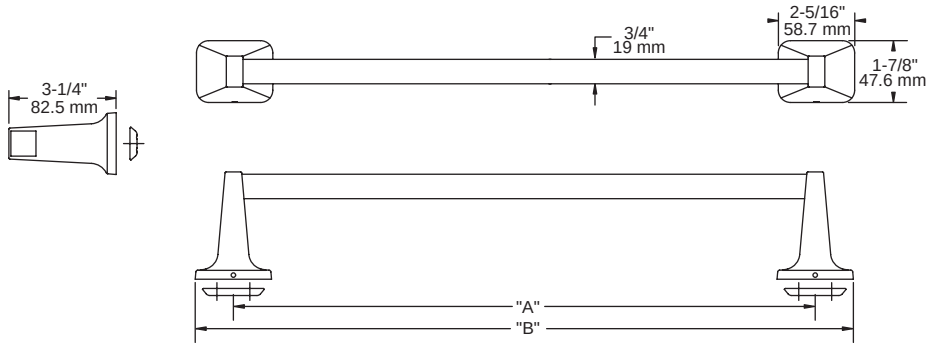

MATERIALS: Posts - Zinc Die Cast
Bars - Aluminum Tubing
Wall Plate - Steel, Nickel Plated

INSTALLATION: Mount wall plate bracket(s) per installation instructions with supplied fasteners. Slip product over wall plate(s) and tighten set screws until secure.

OPTIONAL FASTENER INFORMATION:
Wood blocking is preferable behind all wall surfaces. If wood blocking is not available, the following fasteners are suggested: Tile/Masonry - Plastic or Lead Anchors, Plaster/Drywall - Toggle Bolts.

SPECIFICATION: Surface mounted towel bar shall be model _____ (fill in model number) by Liberty Hardware Manufacturing Corporation.

LENGTH	18" (457 mm)	24" (610 mm)	30" (762 mm)
DIM "A"	17-5/8" (448 mm)	23-5/8" (600 mm)	29-5/8" (752 mm)
DIM "B"	19-15/16" (506 mm)	25-15/16" (659 mm)	31-15/16" (811 mm)

CONCEALED SCREW INSTALLATION INSTRUCTIONS

Fig. A

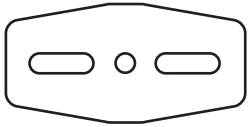

Fig. B

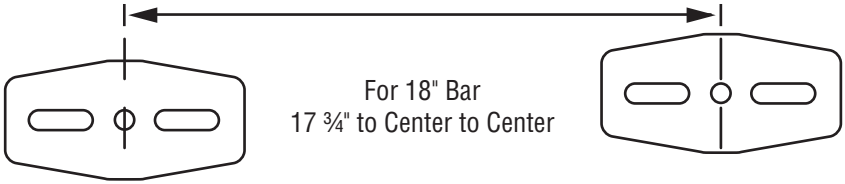

For Towel Bar and Paper Holder Items

1. Mount plates on wall as shown in Fig. B with center to center distances as follows: Paper Holder – 5 ¾" c-c, 18" Bar – 17 ¾" c-c, 24" Bar – 23 ¾" c-c, 30" Bar – 29 ¾" c-c, 36" Bar – 35 ¾" c-c
2. Mount left hand post on wall plate by slipping notched section of post over top lip of wall plate. Tighten set screw.
3. For Towel Bar: Insert bar; mount right hand post on wall plate as in step 2.
4. For Paper Holder: Mount right hand post as in step 2. Insert roller.

For Shelf Items: (F1460, F1465, 1470, F1475)

1. Follow mounting instructions shown above.
2. Center to center distances as follows:

   18" Shelf mount wall plates 17 – ¾" c-c

   24" Shelf mount wall plates 23 – ¾" c-c

For Other Projecting Items

1. Mount Plate on wall as shown in Fig. A
2. Mount projecting part on wall plate by slipping notched section of part over top lip of wall plate.
3. Tighten set screw.

CP2460-XXX