UNIVERSITY OF COLORADO

SPECIFICATIONS

AUGUST 7TH 2007

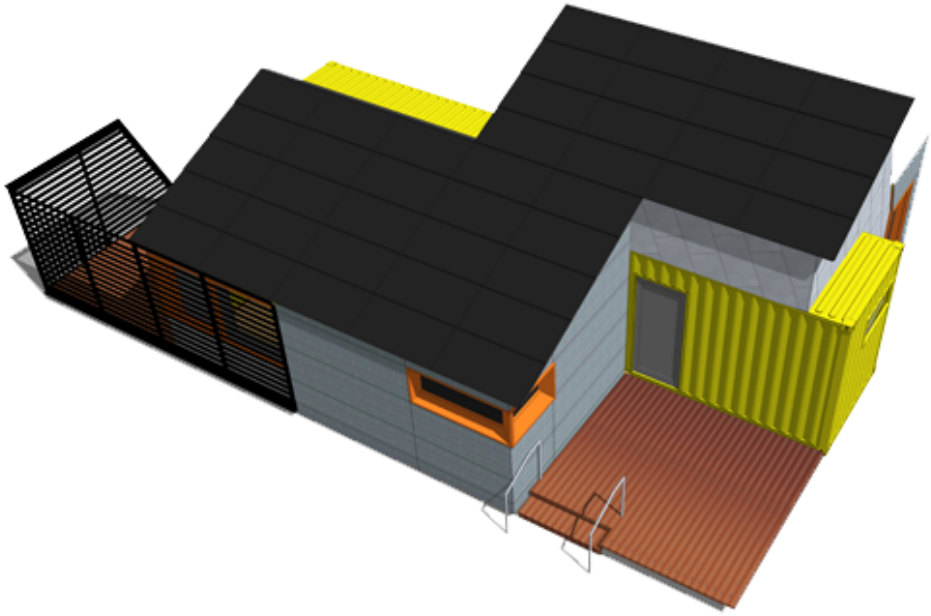

CUSD2007

table of contents

CUSD2007

plumbing

SPECIFICATION SHEET

KOHLER PACKAGE

INDIVIDUAL FIXTURE PRODUCT SHEETS
(follows specification sheet)

Fixtures

Fixture Location	Make	Model	Name	Color	Water Usage	AERATOR AVAILABLE?	ADA?
Bathroom toilet	Kohler	K-19796	Escale Dual Flush toilet tank&	White	0.8 gal/ 1.6 gal	n/a	
			Escale Dual Flush toilet bowl	White	n/a	n/a	
Supply Angle	Kohler	K-7637	Angle SUpply Elbow	Polished Chrome	n/a	n/a	
Lavatory SInk	Kohler	K-2214-G	Ladena Undermount Lav SInk	White	n/a	n/a	
Bathroom faucet	Kohler	K-14410-4	Stillness widespread lav faucet	Polished chrome	2.2 gpm w/o aerator	yes	yes
Thermostatic Valve	Kohler	K-304-NA	Rite-Temp Valve	n/a			
Bathroom shower	Kohler	K-8543	Mastershower Eco handshower	Polished chrome	2.0 gal/ min	lowflow	yes
	Kohler	K-8516	Mastershower slide bar kit	Polished chrome	n/a	n/a	yes
	Kohler	K-9513	Mastershower wall supply elbow	Polished chrome	n/a	n/a	
Kitchen faucet	Kohler	K-6331	Evoke kitchen sink faucet	Vibrant Stainless	2.2 gpm w/o aerator	yes	yes

CU 2

CUSD07 Plumbing Fixtures

THE BOLD LOOK OF KOHLER

CU 3

K−8516 MASTERSHOWER® SLIDE BAR KIT

- 22−3/4"
- Solid brass construction for durability and reliability
- KOHLER finishes resist corrosion and tarnishing, exceeding industry durability standards two times
- For use with MasterShower showering components
- The MasterShower slide bar kit integrates with other MasterShower components to create a performance showering system. Available in an array of KOHLER finishes, the kit includes the bar, a soap dish and a 60" metal shower hose with a swivel base.

Polished Chrome

K−9513 MASTERSHOWER® WALL SUPPLY ELBOW

- Wall−mount installation
- Allows a handshower hose to be mounted nearly flush to the wall
- Solid brass construction ensures years of reliable performance
- KOHLER finishes resist corrosion and tarnishing, exceeding industry durability standards two times
- The MasterShower wall supply elbow functions in a MasterShower performance showering system and allows a handshower hose to be mounted nearly flush to the wall. It features solid brass construction and comes in a variety of KOHLER finishes to customize your bathroom décor.

Polished Chrome

K−8543 MASTERSHOWER® RELAXING ECO HANDSHOWER

- Features three unique spray settings with a turn of the easy−grip ring
- Relax mind and body in a wide soft coverage spray
- Enjoy a gentle massage from a rhythmic pulse spray
- Calm your body and mind in the warmth of soft aerated spray
- Flexible spray nozzles prevent hard water buildup and are easy to clean

Polished Chrome

K−19796 ESCALE® TWO−PIECE ELONGATED TOILET WITH SEAT

- The Escale dual flush elongated toilet offers styling that integrates with the European contemporary design of the Escale Suite
- Dual flush option (1.6 or .8 gallons)
- Elongated toilet bowl
- Includes top−mount flush actuator and seat, less supply
- 12" rough−in; does not use a typical floor flange − please read installation instructions before purchase

White

K−942−4 STILLNESS® WIDESPREAD LAVATORY FAUCET

- Drawing its inspiration from the pure, sleek geometry of Minimalism, Stillness is as much artistic as it is functional.
- Two−handle widespread lavatory faucet for 8" − 16" centers
- KOHLER ceramic disc valves exceed industry longevity standards two times for a lifetime of durable performance
- Premium material construction for durability and reliability
- KOHLER finishes resist corrosion and tarnishing, exceeding industry durability standards over two times

Polished Chrome

K−2214 LADENA™ UNDERCOUNTER LAVATORY, 18" X 12"

- The most spacious KOHLER® undercounter lavatory
- Exterior dimensions: 20−7/8" x 14−3/8"
- Interior dimensions: 18" x 12"
- Vitreous china
- Undercounter installation

White

THE BOLD LOOK OF KOHLER

K−T10940−4 STILLNESS® THERMOSTATIC VALVE TRIM WITH LEVER HANDLE

- Patented K−joint installation ensures consistent trim appearance, regardless of variability in valve rough−in
- Ergonomic lever handle is ADA−compliant
- Trim requires valve to complete
- KOHLER finishes resist corrosion and tarnishing, exceeding industry durability standards over two times
- Streamlined elements and understated sophistication are the essence of Stillness® faucets. Paired with a MasterShower® thermostatic valve, this Stillness thermostatic valve trim ensures safe and accurate water temperature and consistent, luxurious flow rates. Its pared−down approach to design is an ideal accompaniment to contemporary showering environments.

Polished Chrome

K−942−4 STILLNESS® WIDESPREAD LAVATORY FAUCET

K−7715 Lavatory grid drain

K−19796 ESCALE® TWO−PIECE ELONGATED TOILET WITH SEAT

K−7637 Angle supply with stop,
annealed vertical tube and 3/8" NPT

K−6331 EVOKE™ SINGLE CONTROL PULLOUT KITCHEN FAUCET

- Streamline contemporary styling makes clean−up and maintenance simple and quick.
- Spout rotates 360 degrees with 10" clearance below spout for maximum versatility and use with large pots and pans
- Compact three−function sprayhead with spray, aerated flow and pause function for operation outside the sink area.
- ProMotionª technology's light, quiet nylon hose with ball joint configuration on the pullout sprayhead provides superior ergonomic and easy−to−use functionality
- Features MasterCleanª sprayface that resists mineral buildup and is easy to clean/maintain

K−19796 ESCALE® TWO−PIECE ELONGATED TOILET WITH SEAT

- The Escale dual flush elongated toilet offers styling that integrates with the European contemporary design of the Escale Suite
- Dual flush option (1.6 or .8 gallons)
- Elongated toilet bowl
- Includes top−mount flush actuator and seat, less supply
- 12" rough−in; does not use a typical floor flange − please read installation instructions before purchase

White

K−8543 MASTERSHOWER® RELAXING ECO HANDSHOWER

- Features three unique spray settings with a turn of the easy−grip ring
- Relax mind and body in a wide soft coverage spray
- Enjoy a gentle massage from a rhythmic pulse spray
- Calm your body and mind in the warmth of soft aerated spray
- Flexible spray nozzles prevent hard water buildup and are easy to clean

Polished Chrome

K−9513 MASTERSHOWER® WALL SUPPLY ELBOW

- Wall−mount installation
- Allows a handshower hose to be mounted nearly flush to the wall
- Solid brass construction ensures years of reliable performance
- KOHLER finishes resist corrosion and tarnishing, exceeding industry durability standards two times
- The MasterShower wall supply elbow functions in a MasterShower performance showering system and allows a handshower hose to be mounted nearly flush to the wall. It features solid brass construction and comes in a variety of KOHLER finishes to customize your bathroom décor.

Polished Chrome

K−8516 MASTERSHOWER® SLIDE BAR KIT

- 22−3/4"
- Solid brass construction for durability and reliability
- KOHLER finishes resist corrosion and tarnishing, exceeding industry durability standards two times
- For use with MasterShower showering components
- The MasterShower slide bar kit integrates with other MasterShower components to create a performance showering system. Available in an array of KOHLER finishes, the kit includes the bar, a soap dish and a 60" metal shower hose with a swivel base.

Polished Chrome

K−942−4 STILLNESS® WIDESPREAD LAVATORY FAUCET

- Drawing its inspiration from the pure, sleek geometry of Minimalism, Stillness is as much artistic as it is functional.
- Two−handle widespread lavatory faucet for 8" − 16" centers
- KOHLER ceramic disc valves exceed industry longevity standards two times for a lifetime of durable performance
- Premium material construction for durability and reliability
- KOHLER finishes resist corrosion and tarnishing, exceeding industry durability standards over two times

Polished Chrome

K−2214 LADENA™ UNDERCOUNTER LAVATORY, 18" X 12"

- The most spacious KOHLER® undercounter lavatory
- Exterior dimensions: 20−7/8" x 14−3/8"
- Interior dimensions: 18" x 12"
- Vitreous china
- Undercounter installation

White

K−T10940−4 STILLNESS® THERMOSTATIC VALVE TRIM WITH LEVER HANDLE

- Patented K−joint installation ensures consistent trim appearance, regardless of variability in valve rough−in
- Ergonomic lever handle is ADA−compliant
- Trim requires valve to complete
- KOHLER finishes resist corrosion and tarnishing, exceeding industry durability standards over two times
- Streamlined elements and understated sophistication are the essence of Stillness® faucets. Paired with a MasterShower® thermostatic valve, this Stillness thermostatic valve trim ensures safe and accurate water temperature and consistent, luxurious flow rates. Its pared−down approach to design is an ideal accompaniment to contemporary showering environments.

Polished Chrome

K−19796 ESCALE® TWO−PIECE ELONGATED TOILET WITH SEAT

K−7637 Angle supply with stop,
annealed vertical tube and 3/8" NPT

Polished Chrome

K−942−4 STILLNESS® WIDESPREAD LAVATORY FAUCET

K−7715 Lavatory grid drain

Polished Chrome

CUSD07 Plumbing Fixtures • Bathroom • Cost Summary

Products for Bathroom	Brand	Quantity	Unit Price*	Cost*	Selected Color
K−8516 MasterShower® slide bar kit	Kohler	1	$203.85	$203.85	Polished Chrome
K−9513 MasterShower® wall supply elbow	Kohler	1	$77.20	$77.20	Polished Chrome
K−8543 MasterShower® relaxing Eco handshower	Kohler	1	$93.85	$93.85	Polished Chrome
K−19796 Escale® two−piece elongated toilet with seat	Kohler	1	$918.00	$918.00	White
K−942−4 Stillness® widespread lavatory faucet	Kohler	1	$438.35	$438.35	Polished Chrome
K−2214 Ladena™ undercounter lavatory, 18" x 12"	Kohler	1	$208.85	$208.85	White
K−T10940−4 Stillness® thermostatic valve trim with lever handle	Kohler	1	$206.45	$206.45	Polished Chrome
K−7715 Lavatory grid drain	Kohler	1	$37.00	$37.00	Polished Chrome
K−7637 Angle supply with stop, annealed vertical tube and 3/8" NPT	Kohler	1	$50.00	$50.00	Polished Chrome
Total for Bathroom				**$2,233.55**	

CUSD07 Plumbing Fixtures • Kitchen • Cost Summary

Products for Kitchen	Brand	Quantity	Unit Price*	Cost*	Selected Color
K−6331 Evoke™ single control pullout kitchen faucet	Kohler	1	$708.75	$708.75	Vibrant Stainless
Total for Kitchen				**$708.75**	

CUSD07 Plumbing Fixtures • Master Bathroom • Cost Summary

Products for Master Bathroom	Brand	Quantity	Unit Price*	Cost*	Selected Color
K−19796 Escale® two−piece elongated toilet with seat	Kohler	1	$918.00	$918.00	White
K−8543 MasterShower® relaxing Eco handshower	Kohler	1	$93.85	$93.85	Polished Chrome
K−9513 MasterShower® wall supply elbow	Kohler	1	$77.20	$77.20	Polished Chrome
K−8516 MasterShower® slide bar kit	Kohler	1	$203.85	$203.85	Polished Chrome
K−942−4 Stillness® widespread lavatory faucet	Kohler	1	$438.35	$438.35	Polished Chrome
K−2214 Ladena™ undercounter lavatory, 18" x 12"	Kohler	1	$208.85	$208.85	White
K−T10940−4 Stillness® thermostatic valve trim with lever handle	Kohler	1	$206.45	$206.45	Polished Chrome
K−7637 Angle supply with stop, annealed vertical tube and 3/8" NPT	Kohler	1	$50.00	$50.00	Polished Chrome
K−7715 Lavatory grid drain	Kohler	1	$37.00	$37.00	Polished Chrome
Total for Master Bathroom				**$2,233.55**	
Final Cost					**$5,175.85**

*All prices are Manufacturer's Suggested List Prices in U.S. dollars. The price you pay at your local supply outlet may be different than the Manufacturer's Suggested List Price. These prices supersede previous prices and are subject to change without notice. These prices do not include shipping. Any sales tax applicable will be added to the prices.

**This site is provided as a customer courtesy. Please consult a professional, or your local showroom/retailer or homecenter, before purchasing products to ensure proper installation.

KOHLER®

ESCALE™

TWO-PIECE TOILET
K-19796

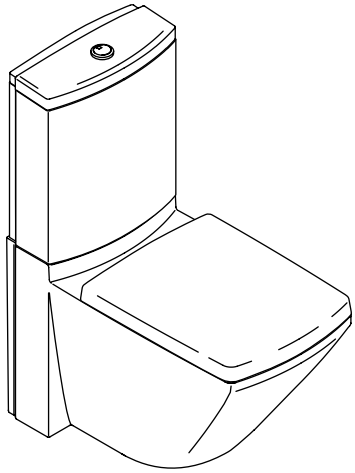

Features

- *Vitreous china*
- *Elongated bowl*
- *1.6 gallons (6 L) of water per flush for solid waste and .8 gallons (3 L) of water per flush for liquid waste*
- *Includes top-mount flush actuator*
- *Includes seat*
- *Includes mounting hardware*
- *Less supply*
- *European contemporary design*
- *Complements the Escale™ suite*
- *A backup shut-off valve is located in the tank, allowing the water to shut off without moving the toilet.*
- *12″ (30.5 cm) rough-in (RI)*
- *26-15/16″ (68.4 cm) x 15-3/8″ (39.1 cm) x 32-3/4″ (83.3 cm)*

Codes/Standards Applicable

Specified model meets or exceeds the following:

- *None applicable*

Colors/Finishes

- 0: White
- 47: Almond
- Other: Refer to Price Book for additional colors/finishes

Specified Model

Model	Description	Colors/Finishes		
K-19796	Two-piece toilet	❑ 0	❑ 47	❑ Other_____

Product Specification:

The vitreous china two-piece toilet shall be 26-15/16″ (68.4 cm) in length, 15-3/8″ (39.1 cm) in width, and 32-3/4″ (83.3 cm) in height. Toilet shall feature dual flush option of 1.6 gpf (6 lpf) for solid waste or .8 gpf (3 lpf) for liquid waste. Toilet shall feature an elongated bowl. Toilet shall include a top-mount flush actuator, seat, and mounting hardware. Toilet shall be for 12″ (30.5 cm) rough-in. Toilet shall be less supply. Toilet shall have a European contemporary design and complement the Escale™ Suite. Toilet shall be Kohler Model K-19796-_____.

USA: 1-800-4-KOHLER
Canada: 1-800-964-5590
kohler.com

ESCALE™

Technical Information

Fixture*:	
Configuration	two-piece
Water per flush	1.6 gpf (6 lpf) or .8 gpf (3 lpf)
Water depth from rim	9-3/4″ (24.8 cm)
Seat post hole centers	6-1/4″ (15.9 cm)
Minimum static pressure required	20 psi (137 kPa)
Maximum static pressure	80 psi (551 kPa)
*Approximate measurements for comparison only.	

Included components:	
Seat	E1417
S-Trap waste fitting	1070830
Mounting hardware	E5511-NF
Mounting template	1062114-7
Bowl	K-19038
Tank	K-19039

Installation Notes

A 4″ D. waste outlet is required for this installation.

A 1″ (2.5 cm) gap between the toilet and the wall is required.

A flange is not required for installation of this product. If this installation will be to new construction, do not install a flange on the waste outlet.

This toilet is secured to the floor using supplied floor anchors and bolts. If your flooring is thin Oriented Strand Board (OSB) or a similar flooring material, it is recommended that 1/2″ plywood be attached to the bottom of the subfloor at the anchor positions for additional support.

Install this product according to the installation guide.

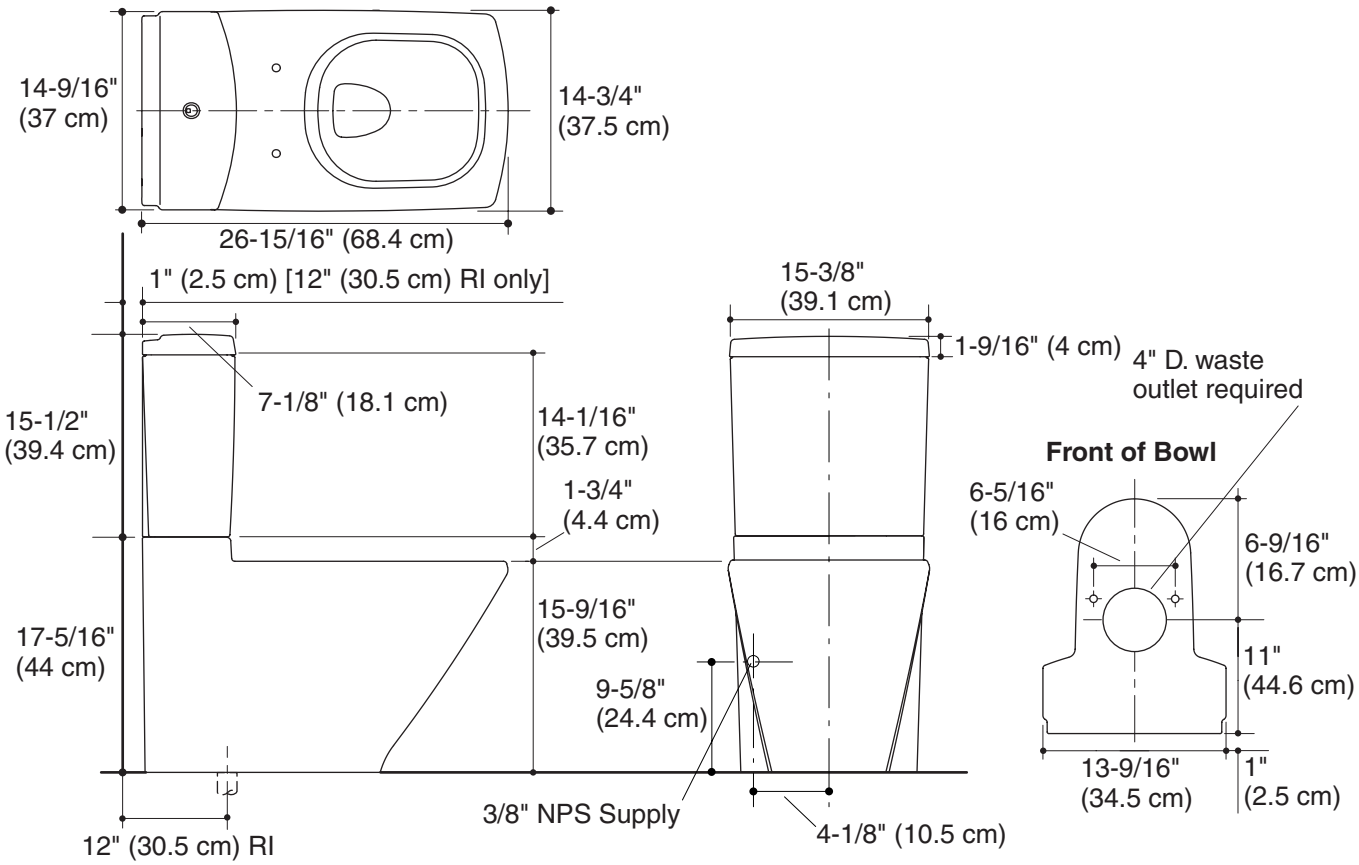

Product Diagram

KOHLER®

LADENA™

UNDERCOUNTER LAVATORY
K-2214
ALSO K-2215

ADA

Features

- *Vitreous china*
- *Undercounter*
- *ADA compliant when installed in a 21″ (53.3 cm) minimum depth countertop*
- *With or without overflow*
- *Includes 52047 clamp assembly*
- *18″ (45.7 cm) x 12″ (30.5 cm) (K-2214, K-2214-G)*
- *21″ (53.3 cm) x 14″ (35.6 cm) (K-2215)*

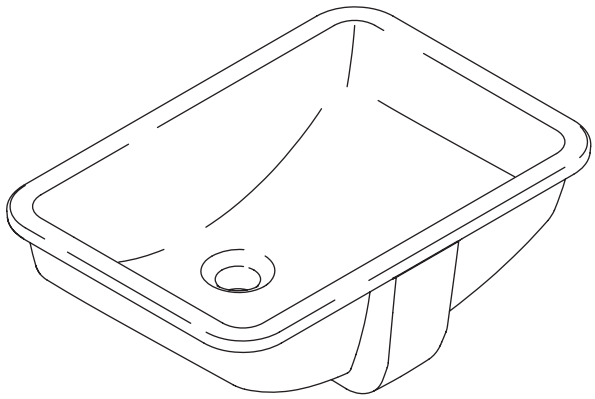

Codes/Standards Applicable

Specified model meets or exceeds the following:

- *ASME A112.19.2*
- *IAPMO/UPC*
- *CSA B45*
- *ICC/ANSI A117.1*
- *ADA*

Colors/Finishes

- 0: White
- Other: Refer to Price Book for additional colors/finishes

Accessories:

- CP: Polished Chrome
- Other: Refer to Price Book for additional colors/finishes

Specified Model

Model	Description	Colors/Finishes	
K-2214	18″ (45.7 cm) x 12″ (30.5 cm) undercounter lavatory with overflow	❑ 0	❑ Other_____
K-2214-G	18″ (45.7 cm) x 12″ (30.5 cm) undercounter lavatory with glazed underside, less overflow	❑ 0	❑ Other_____
K-2215	21″ (53.3 cm) x 14″ (35.6 cm) undercounter lavatory with overflow	❑ 0	❑ Other_____

Recommended Accessories			
K-8998	Adjustable P-Trap	❑ CP	❑ Other_____

Product Specification

The undercounter lavatory shall be made of vitreous china. Lavatory shall be ADA compliant when installed in a 21″ (53.3 cm) minimum depth countertop. Lavatory shall be with overflow (K-2214, K-2215) or less overflow (K-2214-G). Lavatory shall include clamp assembly. Lavatory shall be 18″ (45.7 cm) in length and 12″ (30.5 cm) in width (K-2214, K-2214-G), or 21″ (53.3 cm) in length and 14″ (35.6 cm) in width (K-2215). Lavatory shall be Kohler Model K-_____-_____ or K-2214-G-_____.

USA: 1-800-4-KOHLER
Canada: 1-800-964-5590
kohler.com

LADENA™

Technical Information

Fixture*:	Basin area	Water depth	Drain hole
K-2214, K-2214-G	18″ (45.7 cm) x 12″ (30.5 cm)	4-5/8″ (11.7 cm)	1-3/4″ (4.4 cm) D.
K-2215	21″ (53.3 cm) x 14″ (35.6 cm)	4-5/8″ (11.7 cm)	1-3/4″ (4.4 cm) D.
* Approximate measurements for comparison only.			

Included components:	
Basin clamp assembly	52047
Cut-out template, K-2214 and K-2214-G	1053195-7
Cut-out template, K-2215	1002977-7

Installation Notes

Install this product according to the installation guide.

Supplied basin clamp assemblies require 1″ (2.5 cm) minimum countertop thickness. Installer must supply anchors for thinner countertops.

The product diagram is based on the K-8998 adjustable P-Trap with 1″ (2.5 cm) of tailpiece exposed.

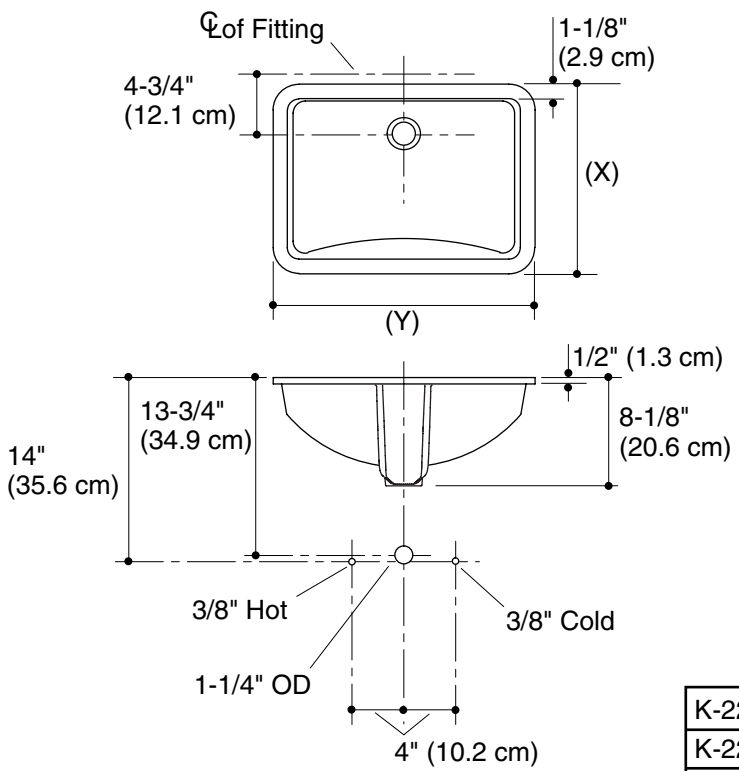

Standard Installation

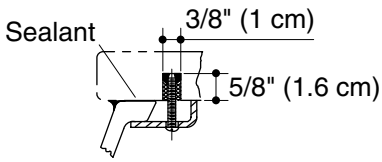

Marble Installation

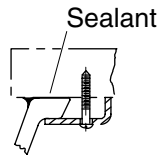

Wood Installation

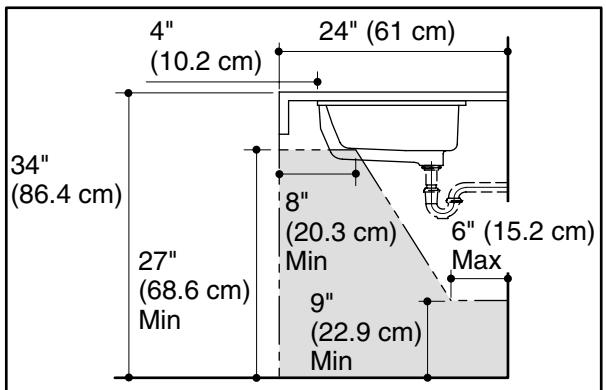

Recommended ADA Installation

K-2214: (X)= 14-3/8" (36.5 cm), (Y)= 20-7/8" (53 cm)
K-2214-G: (X)= 14-3/8" (36.5 cm), (Y)= 20-7/8" (53 cm)
K-2215: (X)= 16-1/4" (41.3 cm), (Y)= 23-1/4" (59.1 cm)

Product Diagram

KOHLER FAUCETS

STILLNESS®

LAVATORY FAUCET

K-942-4

ADA

Features

- *Brass construction*
- *Brass valve bodies*
- *Quarter-turn washerless ceramic disc valves*
- *2.2 gpm (8.3 lpm) flow rate*
- *Lower flow aerator options are available (refer to the Kohler Price Book)*
- *Pop-up drain with lift rod and tailpiece*
- *Flexible connections for easy installation*
- *Lever handles*
- *7-1/4″ (18.4 cm) spout*

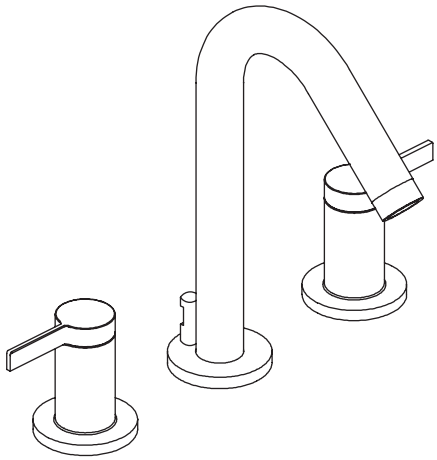

Codes/Standards Applicable

Specified model meets or exceeds the following:

- *ASME A112.18.1/CSA B125.1*
- *IAPMO/UPC*
- *NSF 61*
- *Energy Policy Act of 1992 (EPACT)*
- *ADA*

Colors/Finishes

- CP: Polished Chrome
- Other: Refer to Price Book for additional colors/finishes

Specified Model

Model	Description	Colors/Finishes	
K-942-4	Lavatory faucet with lever handles	❑ CP	❑ Other_____

Product Specification

Two-handle widespread lavatory faucet shall be of brass construction. Faucet shall feature brass valve bodies. Faucet shall feature quarter-turn washerless ceramic disc valves, assuring positive handle stop positioning. Faucet shall be rated at 2.2 gallons (8.3 L) per minute. Faucet shall have lower flow aerator options. Faucet shall include flexible connections, 7-1/4″ (18.4 cm) spout, pop-up drain with lift rod and tailpiece, and lever handles. Faucet shall be Kohler Model K-942-4-_____.

USA: 1-800-4-KOHLER
Canada: 1-800-964-5590
kohler.com

STILLNESS®

Installation Notes

Install this product according to the installation guide.

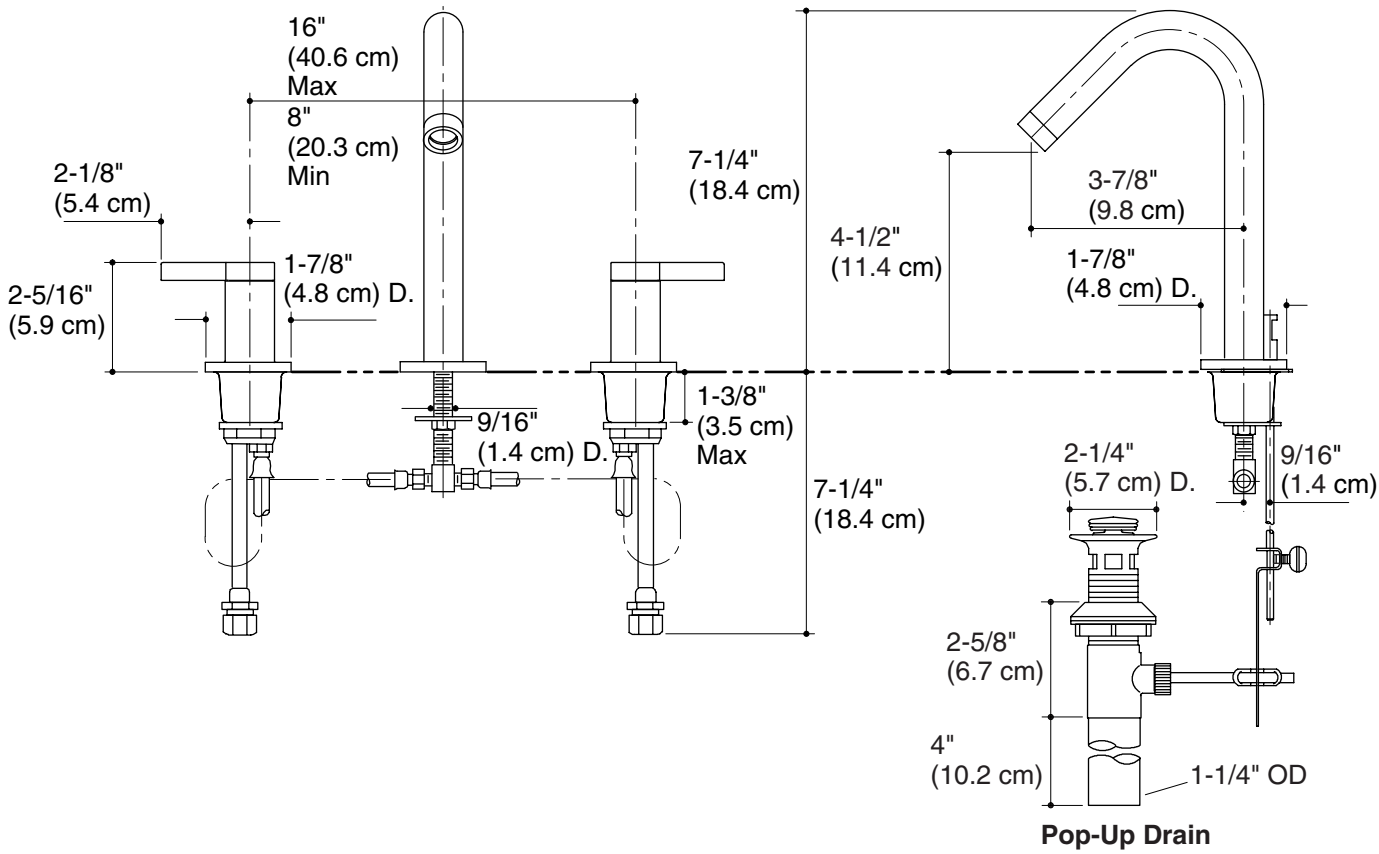

Product Diagram

KOHLER FAUCETS

RITE-TEMP™

PRESSURE-BALANCING VALVE
K-304-K

Features

- *Brass valve body*
- *High-temperature limit stop for added safety*
- *Mixing valve cycles from "cold" to "hot"*
- *Rite-Temp pressure-balancing diaphragm design valve*
- *One-piece diaphragm cartridge design for ease of maintenance*
- *Available with or without screwdriver stops*
- *Available with female connections for CPVC adapters*
- *Available with PEX connections*

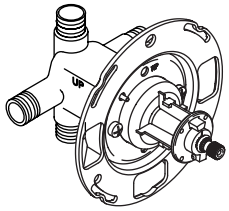
K-304-K

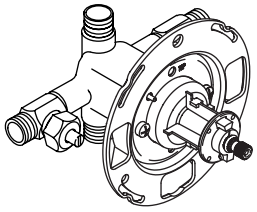
K-304-KS

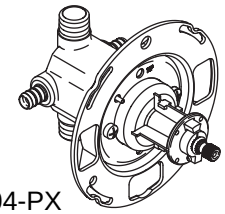
K-304-PX

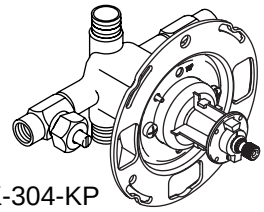
K-304-KP

Codes/Standards Applicable

Specified model meets or exceeds the following:

- *ASME A112.18.1*
- *ASSE 1016*
- *CSA International*
- *IAPMO/UPC*

Colors/Finishes

- NA: None applicable

Specified Model

Model	Description	Colors/Finishes
K-304-K	Without screwdriver stops	❑ NA
K-304-KS	With screwdriver stops	❑ NA
K-304-KP	With screwdrivers stops, female connections for CPVC adapters	❑ NA
K-304-PX	Without screwdriver stops, PEX connections	❑ NA

Product Specification

Rite-Temp pressure-balancing valve shall have a brass valve body. Product shall include a Rite-Temp pressure-balancing diaphragm design valve with a one-piece diaphragm cartridge design for ease of maintenance. Product shall have mixing valve cycles from "cold" to "hot" and a high-temperature limit stop for added safety. Product shall be available without (-K) or with screwdriver stops (-KS), or with screwdrivers stops with female connections for CPVC adapters (-KP), or without screwdriver stops with PEX connections (-PX). Valve shall be Kohler Model K-304-_____-NA.

USA: 1-800-4-KOHLER
Canada: 1-800-964-5590
kohler.com

RITE-TEMP™

Installation Notes

Install this product according to the installation guide.

Avoid cross-flow conditions. Do not install a shut-off device on either valve outlet.

Cap the shower outlet if a deck-mount spout, diverter, or handshower is connected to a spout outlet.

Install a straight pipe or tube drop of 7″ (17.8 cm) to 18″ (45.7 cm) with a single elbow between the valve and wall-mount spout.

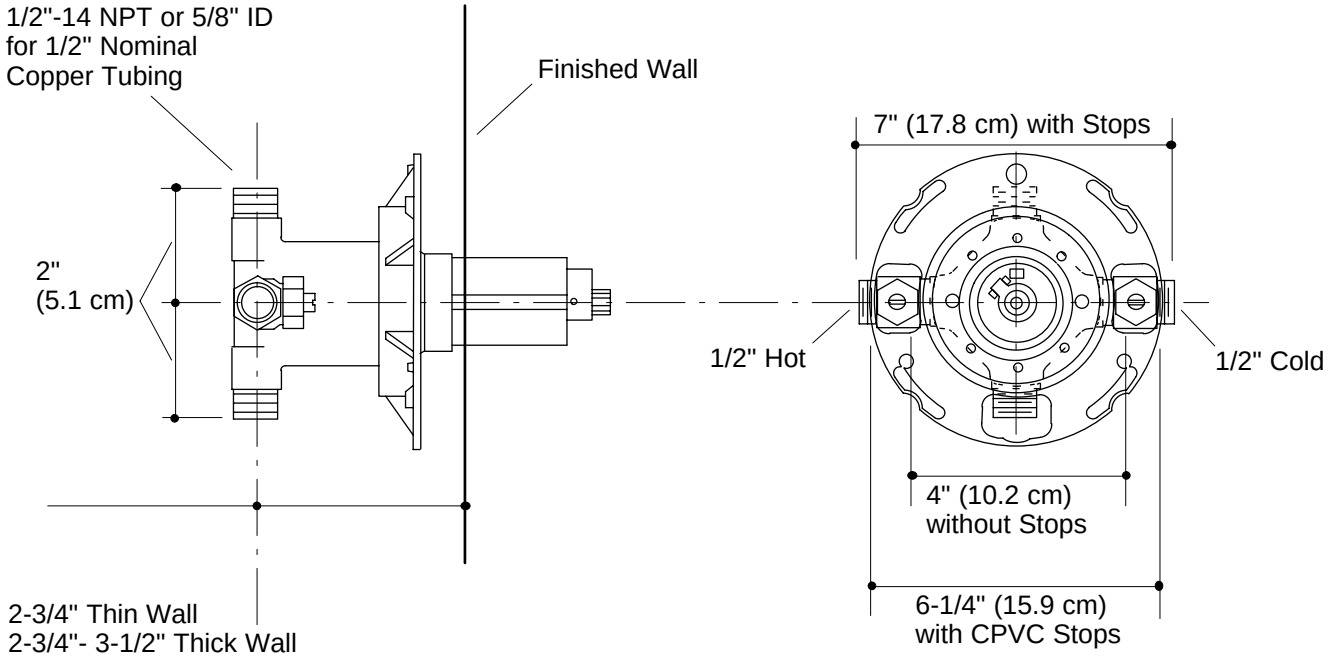

Product Diagram

KOHLER® FAUCETS

STILLNESS®

THERMOSTATIC FAUCET TRIM
K-T10940,
ALSO K-T10941, K-T10943, K-T10944

ADA

Features

- *Brass construction*
- *Available with blade handle*
- *Front seal plate assembly*
- *Handle assembly*
- *Complements Stillness® Suite*

Codes/Standards Applicable

Specified model meets or exceeds the following:

- *ASME A112.18.1*
- *CSA B125*
- *IAPMO/UPC*
- *ADA*

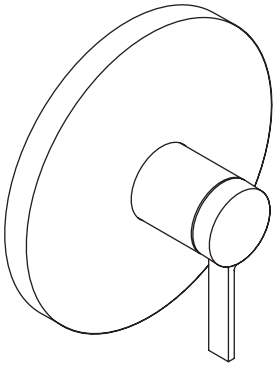

Colors/Finishes

- CP: Polished Chrome
- Other: Refer to Price Book for additional colors/finishes
- NA: None applicable

Specified Model

For complete faucet, both faucet trim and valving must be specified.

Model	Description	Colors/Finishes	
K-T10940-4	Thermostatic valve trim	❑ CP	❑ Other ____
K-T10941-4	Stacked thermostatic valve trim	❑ CP	❑ Other ____
K-T10943-4	Volume control trim	❑ CP	❑ Other ____
K-T10944-4	Transfer valve trim	❑ CP	❑ Other ____

Required Accessory		
K-669-KS	3/4″ Thermostatic valve	❑ NA
K-670-KS	3/4″ Stacked thermostatic valve	❑ NA
K-671-K	3/4″ Volume control	❑ NA
K-672-K	3/4″ Transfer valve	❑ NA
K-679-KS	1/2″ Thermostatic valve	❑ NA
K-680-KS	1/2″ Stacked thermostatic valve	❑ NA
K-681-K	1/2″ Volume control	❑ NA

Product Specification

Thermostatic valve faucet trim shall be of brass construction. Trim shall include front seal plate assembly and handle assembly. Trim shall be available with blade handle. Thermostatic valve faucet shall complement the Stillness® Suite. Faucet trim shall be Kohler Model K-T_____-____-____ and thermostatic valving shall be K-___-__-NA.

USA: 1-800-4-KOHLER
Canada: 1-800-964-5590
kohler.com

STILLNESS®

Installation Notes

Install this product according to the installation guide.

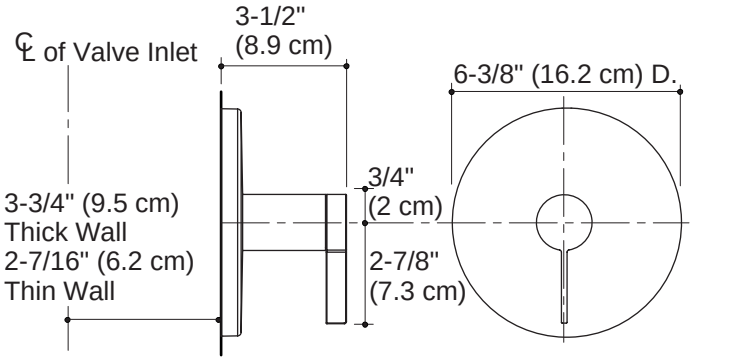

K-T10940

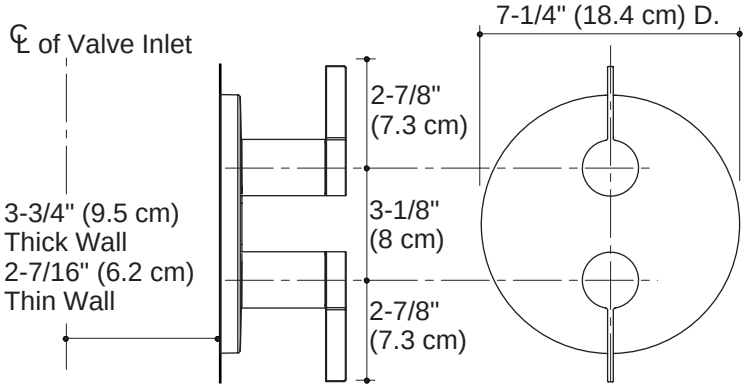

K-T10941

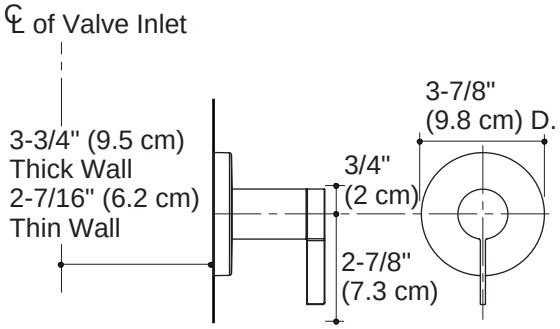

K-T10943/44

Product Diagram

MASTERSHOWER® / REVIVAL®

Installation Notes

Install this product according to the installation guide.

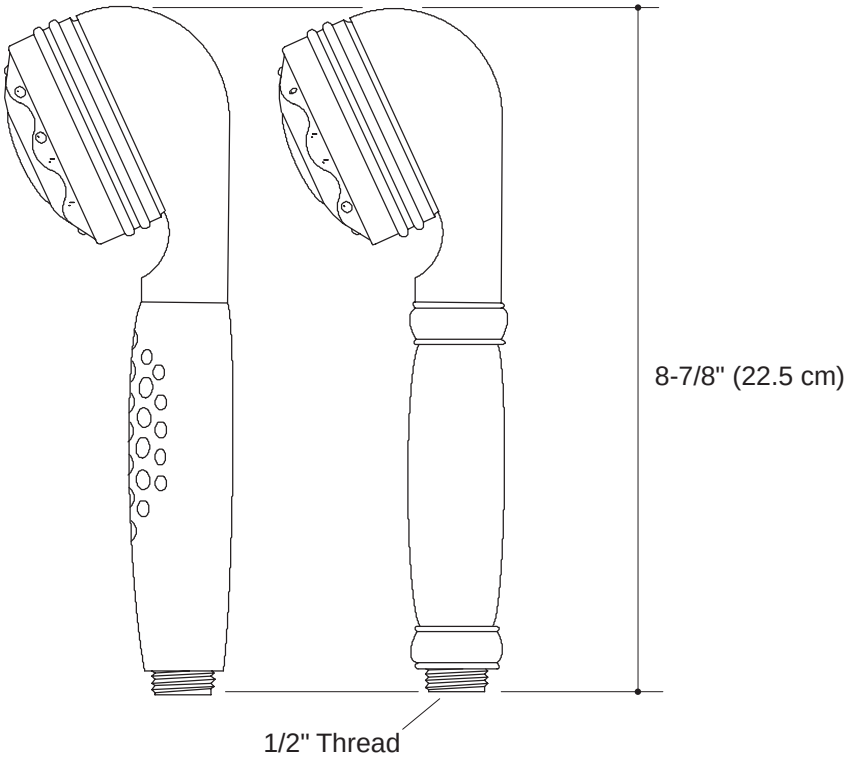

Product Diagram

KOHLER® FAUCETS

MASTERSHOWER® / REVIVAL®

HANDSHOWERS
K-8501, K-16161

Features

- *Invigorating, relaxing, or family (both invigorating and relaxing) spray options*
- *MasterShower™ or Revival® style*
- *2.5 gallons (9.5 L) per minute (Non-Eco models)*
- *2.0 gallons (7.5 L) per minute (Eco models)*

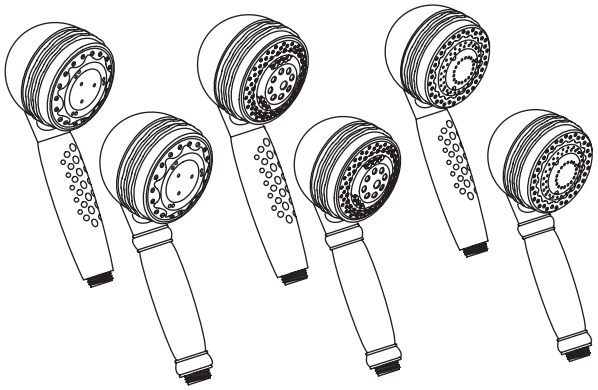

Codes/Standards Applicable

Specified model meets or exceeds the following:

- *ASME A112.18.1*
- *IAPMO/UPC*

Colors/Finishes

- CP: Polished Chrome
- PB: Polished Brass
- Other: Refer to Price Book for additional colors/finishes

Specified Model

Model	Description	Colors/Finishes		
K-8501	MasterShower invigorating handshower	❑ CP	❑ PB	❑ Other _____
K-8502	MasterShower relaxing handshower	❑ CP	❑ PB	❑ Other _____
K-8503	MasterShower family handshower	❑ CP	❑ PB	❑ Other _____
K-8543	MasterShower relaxing Eco handshower	❑ CP	❑ PB	❑ Other _____
K-16161	Revival invigorating handshower	❑ CP	❑ PB	❑ Other _____
K-16162	Revival relaxing handshower	❑ CP	❑ PB	❑ Other _____
K-16163	Revival family handshower	❑ CP	❑ PB	❑ Other _____

Required Accessory		Colors/Finishes	
K-9514	60″ (152.4 cm) metal shower hose	❑ CP	❑ PB

Product Specification

Handshower shall have either invigorating, relaxing, or family sprays options, and requires a shower hose. Handshower shall be MasterShower or Revival style. Non-Eco models shall have a flow rate of 2.5 gallons (9.5 L) per minute. Eco models shall have a flow rate of 2.0 gallons (7.5 L) per minute. Handshower shall be Kohler Model K-_____-_____.

USA: 1-800-4-KOHLER
Canada: 1-800-964-5590
kohler.com

CU
27

KOHLER FAUCETS®

MASTERSHOWER™

PERFORMANCE SHOWERING ACCESSORIES

K-8515

FEATURES

- *Accessories for MasterShower handshower system*

COLORS/FINISHES

- CP Polished Chrome
- PB Polished Brass
- Other Refer to Faucets Price Book for additional finishes

SPECIFIED MODEL:

Model/Description	
K-8515 Wall Bracket ☐CP ☐PB ☐Other_____	
K-8516 Slidebar with Hose ☐CP ☐PB ☐Other_____	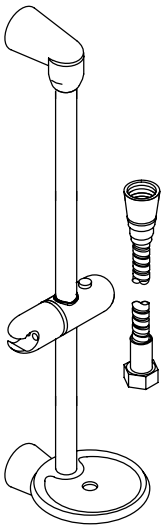
K-8517 Adjustable Bracket with Hose ☐CP ☐PB ☐Other_____	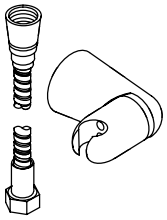
K-9515 Adjustable Bracket ☐CP ☐PB ☐Other_____	

Model/Description	
K-9516 Slide Bar ☐CP ☐PB ☐Other_____	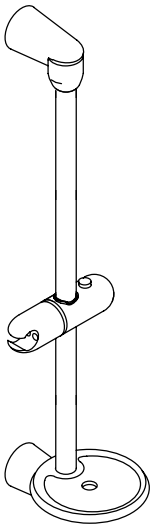
K-9513 Wall Supply Elbow ☐CP ☐PB ☐Other_____	
K-9514 60” Metal Shower Hose ☐CP ☐PB	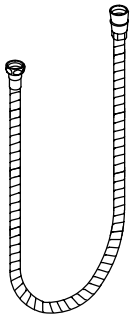

MASTERSHOWER™

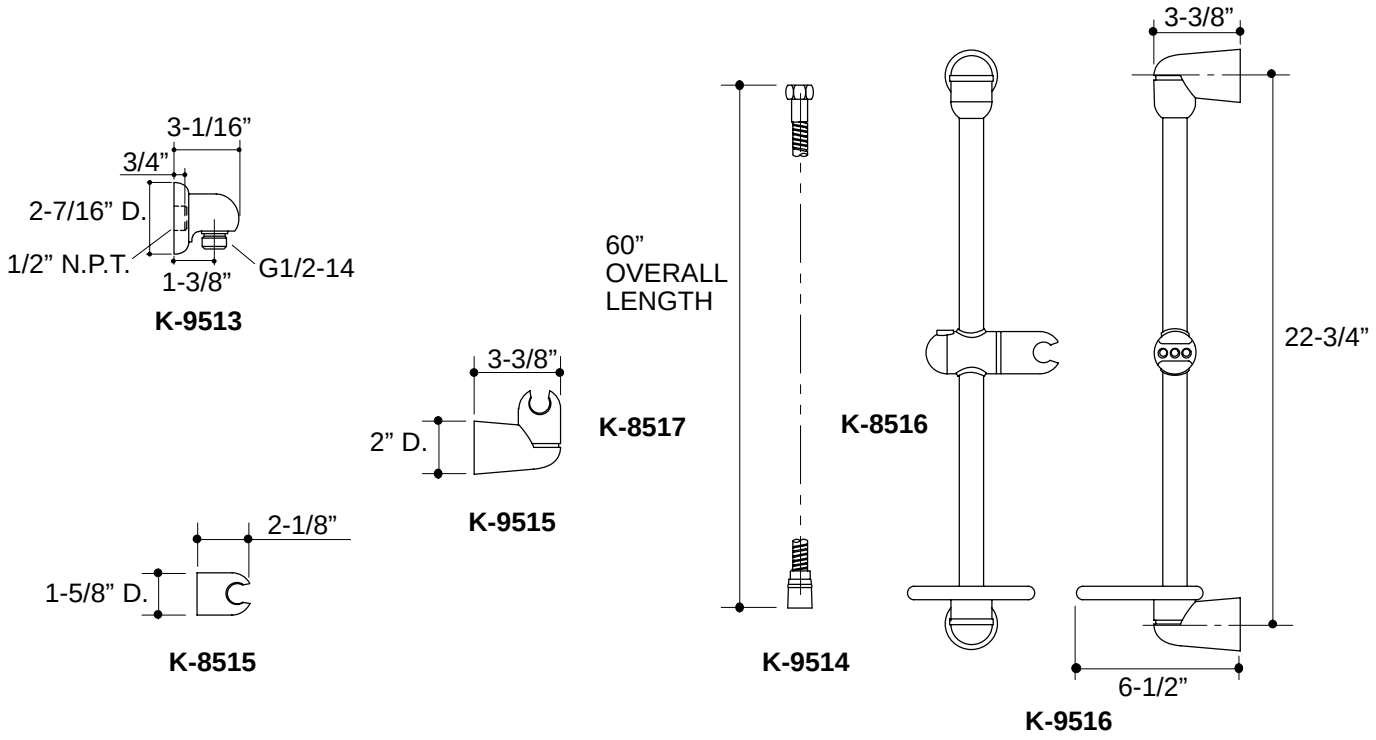

18

PRODUCT DIAGRAM

KOHLER FAUCETS

EVOKE™

PULL-OUT KITCHEN SINK FAUCET

K-6331

ALSO K-6332

ADA

Features

- *Metal construction*
- *360° swing spout with integral pull-out spray and hose*
- *Three function sprayhead with spray, aerated stream, and pause settings*
- *Promotion™ technology with nylon hose and ball joint for easy operation*
- *One-piece, self-contained ceramic disc valve allows both volume and temperature control*
- *Temperature memory allows faucet to be turned on and off at any temperature setting*
- *High-temperature limit setting for added safety*
- *Integral backflow protection*
- *ADA compliant lever handle*
- *Lower flow aerator options are available (refer to the Kohler Price Book)*
- *2.2 gallons (8.3 L) per minute maximum flow rate*
- *Contemporary styling*

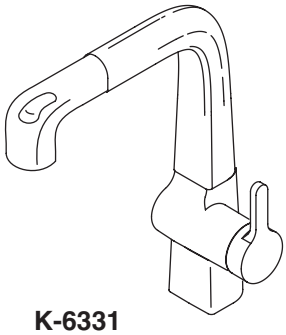

K-6331

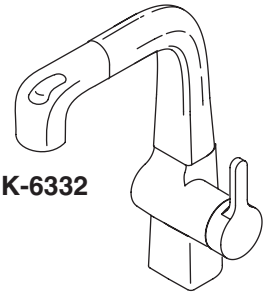

K-6332

Codes/Standards Applicable

Specified model meets or exceeds the following:

- *ADA*
- *IAPMO/cUPC*
- *ASME A112.18.1/CSA B125.1*
- *NSF 61*
- *Energy Policy Act of 1992*

Colors/Finishes

- CP: Polished Chrome
- Other: Refer to Price Book for additional colors/finishes

Specified Model:

Model	Description	Colors/Finishes	
K-6331	Primary pull-out kitchen sink faucet – 9″ (22.9 cm) spout reach	❑ CP	❑ Other ____
K-6332	Secondary/prep pull-out kitchen sink faucet – 8″ (20.3 cm) spout reach	❑ CP	❑ Other ____

Product Specification

The contemporary pull-out kitchen sink faucet shall be of metal construction. Valve shall be a one-piece, self-contained ceramic disc valve, allowing volume and temperature control. Valve shall feature temperature memory, allowing the faucet to be turned on and off at any temperature setting. Product shall feature a high-temperature limit stop for added safety. Product shall feature a 360° swing spout with integral pullout spray and hose. Product shall feature a three function sprayhead with spray, aerated stream, and pause settings. Product shall include integral backflow protection, ADA compliant lever handle, and 2.2 gallon (8.3 L) per minute flow rate. Product shall feature Promotion technology with nylon hose and ball joint for easy operation. Product shall be available with lower flow aerator options (see Kohler Price Book). Kitchen faucet shall be Kohler Model K-_____-_____.

USA: 1-800-4-KOHLER
Canada: 1-800-964-5590
kohler.com

EVOKE™

Installation Notes

Install this product according to the installation guide.

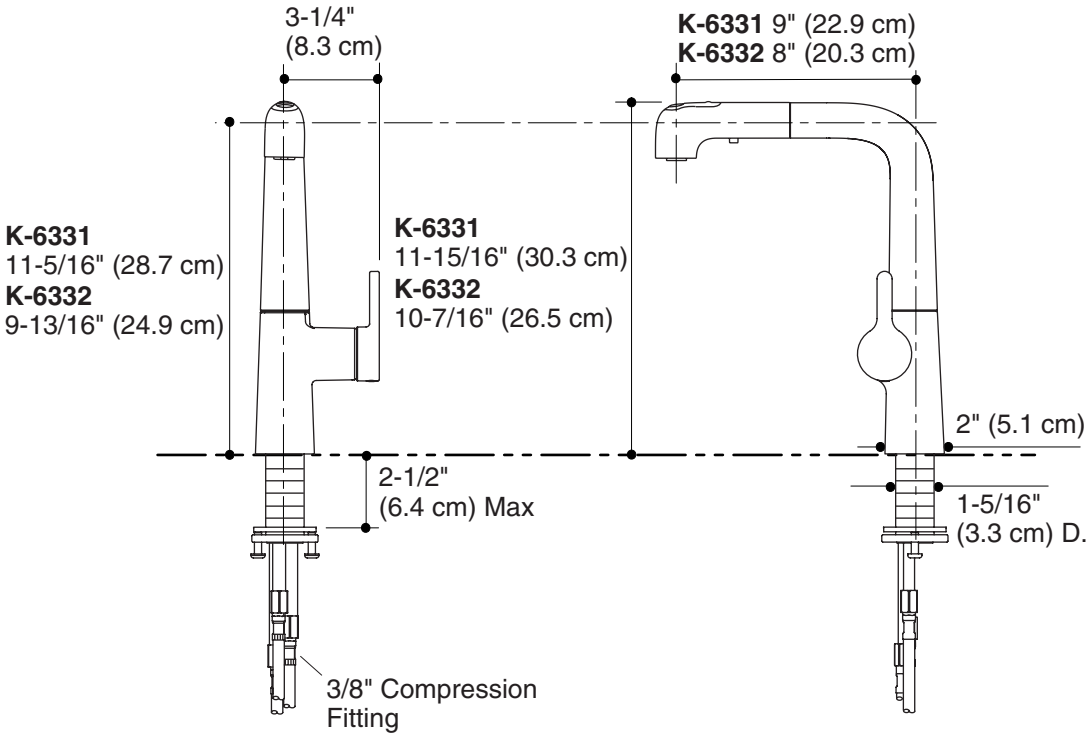

Product Diagram

CUSD2007

appliances

SPECIFICATION SHEET

INDIVIDUAL APPLIANCE PRODUCT SHEET
(order follows specification sheet)

	ADA accessible?	yes			
Refrigerator		Kitchenaid KBRC36FTS Architect ® Series II			
Capacity	cuft		20.38	21.9	21.9
Energy Star?		YES	no	yes	
Annual Energy Consumption	kWh/yr		482	671	572
Full Load Hours per Day	hr		20.12	20.12	20.12
Operating Hours per Year	hr/yr		7344	7344	7344
Voltage		115v			
Amperage		15-20 A			

	ADA accessible?	yes		
Oven and Range		oven= GE Monogram Trivection ZET3038SH		
Oven Volume		4.3 cuft		
Number of Burners	#		4	
Electricity Usage	kWh/yr			?
Gas Usage	therms/yr		0	
Total Energy Use	kJ/hr	?		?
Range/ cooktop		Diva De Provance 4 burner 30" DDP-4 30"		
Range rated power (W)		7.2 kW total (b/w .05-2.2, 2.8-3.6 max kW/ burner)		
Range voltage		240v		
Range amperage		50A		
oven rated power		?		?
oven voltage		240v OR 208v		
oven amperage		30A		

Dishwasher	ADA accessible?	yes		
	From the Manufacturer's Website			
		Kitchenaid KUDD01D		
		Double Drawer Dishwasher System | Architect ® Series II		
		10 int'l place settings		
	internal heater?	no		
	cold water inlet only?	no. hot water connect only		
	energystar?	yes		
Energy				
	Energy Guide Label			
		Cost of Electricity		$ / kWh
		Cost of Natural Gas		$ / therm
		Annual Cost with Elec. DHW		$
		Annual Cost with Gas DHW		$
		323 kWh / yr energy consumption		
or:				
Hot water per cycle		2drawer= 7.9(heavy), 5.3 (norm), 4.4 (quick)		
Electricity per cycle		?		
Place settings			10	

	ADA accessible?	yes		
Washer-Dryer combination unit	make	Asko		
	model	WCAM1812 combo washer/dryer		
	capacity	2.46 cuft		
	energystar?	YES		
	annual energy consumption	217 kWh		
	annual water usage	7213 gal/yr		
	average water consumption	20g		
	energystar water factor		7.5	
	internal heater	1300w internal heating unit		
	coldwater inlet only			?
	voltage	110/115v		
	amperage	15A		
	venting req'd?	NO, internal super efficient condenser		
	rpm	550 rpm-800 rmp-1200 rpm		
	axis	horizontal		
	EnergyStar website	Modified Energy Factor cuft/kWh*cycle=2.6		
		Water Consumption Factor gal/cuft*cycle= 7.5		

KitchenAid® HOME APPLIANCES Bottom Mount Refrigerator

PRODUCT MODEL NUMBERS

KBFC42FT	KBLS36FT
KBFO42FT	KBRC36FT
KBLC36FT	KBRO36FT
KBLO36FT	KBRS36FT

Electrical: A 115 Volt, 60 Hz., AC only 15- or 20-amp fused, grounded electrical supply is required. It is recommended that a separate circuit serving only your refrigerator be provided. Use an outlet that cannot be turned off by a switch. Do not use an extension cord.

Water Supply: A cold water supply with water pressure of between 30 and 120 psi (207 - 827 kPa) is required to operate the water dispenser and ice maker. If you have questions about your water pressure, call a licensed, qualified plumber.

If a reverse osmosis water filtration system is connected to your cold water supply, the water pressure to the reverse osmosis system needs to be a minimum of 40 to 60 psi (276 - 414 kPa).

Do not install the refrigerator near an oven, radiator, or other heat source, nor in a location where the temperature will fall below 55°F.

CABINET OPENING DIMENSIONS

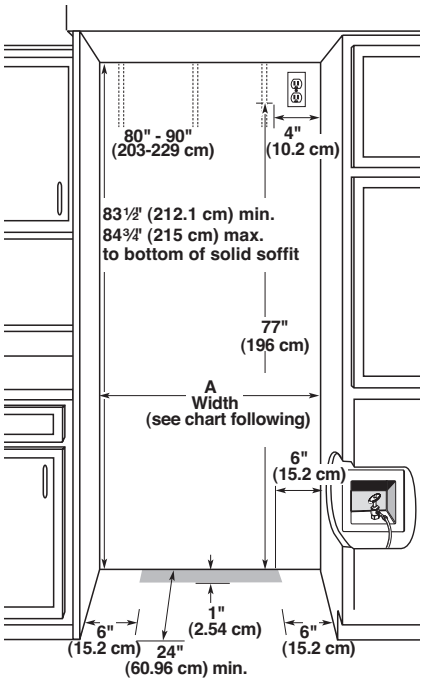

Model	Width A (as shown above)
36	35½" (90.2 cm)
42	41½" (105.4 cm)

NOTE: Flooring under refrigerator must be at same level as room.

OVERALL DIMENSIONS

TOP VIEW

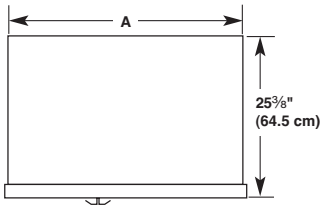

- Height dimensions are shown with the leveling legs extended to 1/8" (3 mm) below the rollers.
- The power cord is 84" (213 cm) long.

Model	Width A
36	35¼" (89.5 cm)
42	41¼" (105 cm)

SIDE VIEW

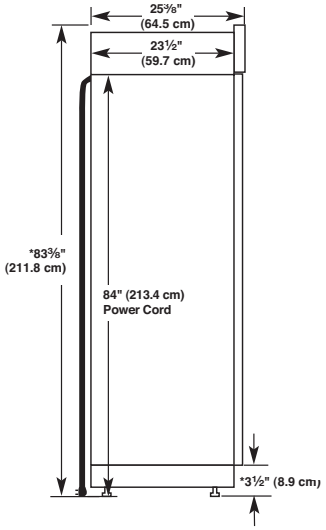

FRONT VIEW

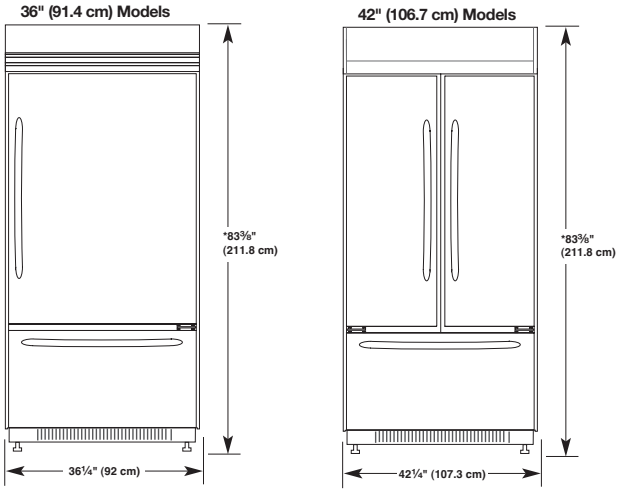

*When leveling legs are fully extended to 1¼" (3.2 cm) below rollers, add 1⅛" (2.9 cm) to the height dimensions.

DOOR SWING DIMENSIONS

36" (91.4 cm) Models

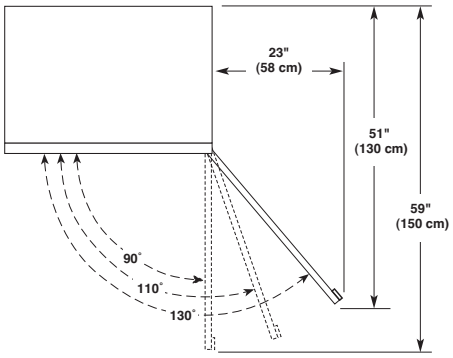

42" (106.7 cm) Models

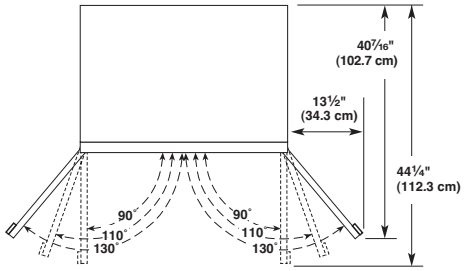

Dimensions are for planning purposes only. For complete details, see Installation Instructions packed with product. Specifications subject to change without notice.

Ref. 2320680A
05-17-07

For Further Assistance

If you need further assistance, you can write to KitchenAid Canada with any questions or concerns at:

Customer Interaction Centre
KitchenAid Canada
1901 Minnesota Court
Mississauga, Ontario L5N 3A7

Please include a daytime phone number in your correspondence.

Accessories

To order accessories, call **1-800-442-9991** and ask for the appropriate part number listed below or contact your authorized KitchenAid® dealer. In Canada, call **1-800-807-6777**.

Stainless Steel Cleaner & Polish

Order Part #4396920

Replacement Water Filter:

Order Part #4396841 (T2RFWG2)

In Canada, Order Part #4396841B (T2RFWG2)

WATER FILTER CERTIFICATIONS

State of California
Department of Health Services

Water Treatment Device
Certificate Number

05 - 1703

Date Issued: April 6, 2005
Date Revised: September 7, 2005

Trademark/Model Designation	Replacement Elements
Whirlpool Deluxe T2WG2	T2RFWG2
Whirlpool Deluxe T2WG2L	T2RFWG2
KitchenAid Deluxe T2WG2	T2RFWG2
KitchenAid Deluxe T2WG2L	T2RFWG2

Manufacturer: Whirlpool Corporation

The water treatment device(s) listed on this certificate have met the testing requirements pursuant to Section 116830 of the Health and Safety Code for the following health related contaminants:

Microbiological Contaminants and Turbidity
None

Inorganic/Radiological Contaminants
Lead
Mercury

Organic Contaminants
Benzene
Carbofuran
o-Dichlorobenzene
Toxaphene

Rated Service Capacity: 200 gals **Rated Service Flow:** 0.85 gpm

Conditions of Certification:
Do not use with water that is microbiologically unsafe or of unknown quality, without adequate disinfection before or after the system.

State of California
Department of Health Services

Water Treatment Device
Certificate Number

05 - 1702

Date Issued: April 6, 2005
Date Revised: September 7, 2005

Trademark/Model Designation	Replacement Elements
Whirlpool Deluxe T1WG2	T2RFWG2
Whirlpool DeluxeT1WG2L	T2RFWG2
KitchenAid DeluxeT1WG2	T2RFWG2
KitchenAid DeluxeT1WG2L	T2RFWG2

Manufacturer: Whirlpool Corporation

The water treatment device(s) listed on this certificate have met the testing requirements pursuant to Section 116830 of the Health and Safety Code for the following health related contaminants:

Microbiological Contaminants and Turbidity
None

Inorganic/Radiological Contaminants
Lead
Mercury

Organic Contaminants
Benzene
Carbofuran
o-Dichlorobenzene
Toxaphene

Rated Service Capacity: 200 gals **Rated Service Flow:** 0.5 gpm

Conditions of Certification:
Do not use with water that is microbiologically unsafe or of unknown quality, without adequate disinfection before or after the system.

PRODUCT DATA SHEETS

Base Grille Water Filtration System

Model T2WG2L/T2RFWG2 Capacity 200 Gallons (758 Liters)
Model T2WG2/T2RFWG2 Capacity 200 Gallons (758 Liters)

Tested and certified by NSF International against ANSI/NSF Standard 42 for the reduction of Chlorine Taste and Odor, Particulate Class II*; and against ANSI/NSF Standard 53 for the reduction of Lead, Mercury, Benzene, Toxaphene, O-dichlorobenzene, and Carbofuran.

This system has been tested according to NSF/ANSI 42/53 for the reduction of the substances listed below. The concentration of the indicated substances in water entering the system was reduced to a concentration less than or equal to the permissible limit for water leaving the system, as specified in NSF/ANSI 42/53.

Substance Reduction Aesthetic Effects	NSF Reduction Requirements	Average Influent	Influent Challenge Concentration	Maximum Effluent	Average Effluent	Minimum % Reduction	Average % Reduction
Chlorine Taste/Odor Particulate Class II*	50% reduction 85% reduction	2.0182 mg/L 1333333 #/mL	2.0 mg/L ± 10% At least 10,000 particles/mL	0.06 mg/L 6600 #/mL**	0.0536 mg/L 2325 #/mL	97.03 99.51	97.34 99.83
Contaminant Reduction	**NSF Reduction Requirements**	**Average Influent**	**Influent Challenge Concentration**	**Maximum Effluent**	**Average Effluent**	**Minimum % Reduction**	**Average % Reduction**
Lead: @ pH 6.5*** Lead: @ pH 8.5***	0.010 mg/L 0.010 mg/L	0.1533 mg/L 0.1400 mg/L	0.15 mg/L ± 10% 0.15 mg/L ± 10%	0.0005 mg/L 0.0007 mg/L	0.0005 mg/L 0.0006 mg/L	99.67 99.50	99.67 99.57
Mercury: @ pH 6.5 Mercury: @ pH 8.5	0.002 mg/L 0.002 mg/L	0.0058 mg/L 0.0059 mg/L	0.006 mg/L ± 10% 0.006 mg/L ± 10%	0.0002 mg/L 0.0005 mg/L	0.0002 mg/L 0.0003 mg/L	96.54 91.57	96.54 94.92
Benzene	0.005 mg/L	0.0154 mg/L	0.015 mg/L ± 10%	0.0012 mg/L	0.0006 mg/L	92.22	96.34
O-Dichlorobenzene	0.6 mg/L	1.7571 mg/L	1.8 mg/L ± 10%	0.0250 mg/L	0.0066 mg/L	98.58	99.63
Toxaphene	0.003 mg/L	0.015 mg/L	0.015 mg/L ± 10%	0.001 mg/L	0.001 mg/L	93.33	93.33
Carbofuran	0.04 mg/L	0.0819 mg/L	0.08 mg/L ± 10%	0.0400 mg/L	0.0213 mg/L	51.13	74.00

Test Parameters: pH = 7.5 ± 0.5 unless otherwise noted. Flow = 0.85 gpm (3.2 Lpm). Pressure = 60 psig (413.7 kPa). Temp. = 68°F to 71.6°F (20°C to 22°C).

- It is essential that operational, maintenance, and filter replacement requirements be carried out for the product to perform as advertised.
- Use replacement cartridge T2RFWG2, part #4396841. In Canada, use replacement cartridge T2RFWG2, part #4396841B. 2006 suggested retail price of $39.99 U.S.A./ $49.99 Canada. Prices are subject to change without notice.

  Model T2WG2L: Style 1 – Press FILTER to check the status of your water filter. If the filter indicator light is yellow, order a new filter. If the filter indicator light is red, it is recommended that you replace the filter.

  Style 2 – When the filter indicator reads 10%, order a new filter. When the filter indicator reads 0%, it is recommended that you replace the filter.

  Model T2WG2: Change the water filter cartridge every 6 months depending upon your usage. If the water flow to the water dispenser or ice maker decreases noticeably before 6 months have passed, replace the water filter cartridge more often.
- These contaminants are not necessarily in your water supply. While testing was performed under standard laboratory conditions, actual performance may vary.
- The product is for cold water use only.
- Do not use with water that is microbiologically unsafe or of unknown quality without adequate disinfection before or after the system.
- Refer to the “Assistance or Service” section for the Manufacturer’s name, address and telephone number.
- Refer to the “Warranty” section for the Manufacturer’s limited warranty.

Application Guidelines/Water Supply Parameters	
Water Supply	City or Well
Water Pressure	30 - 120 psi (207 - 827 kPa)
Water Temperature	33° - 100°F (0.6° - 37.8°C)
Service Flow Rate	0.85 gpm (3.2 Lpm) @ 60 psi

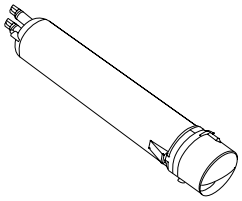

*Class II particle size: 1 um to <5 um
**Test requirement is at least 100,000 particles/mL of AC Fine Test Dust.
***Compliant for Lead reduction requirements under NSF/ANSI Standard 53 as tested by Pace Analytical Services, Inc.
® NSF is a registered trademark of NSF International.

Base Grille Water Filtration System

Model T1WG2L/T2RFWG2 Capacity 200 Gallons (758 Liters)
Model T1WG2/T2RFWG2 Capacity 200 Gallons (758 Liters)

Tested and certified by NSF International against ANSI/NSF Standard 42 for the reduction of Chlorine Taste and Odor, Particulate Class II*; and against ANSI/NSF Standard 53 for the reduction of Lead, Mercury, Benzene, Toxaphene, O-dichlorobenzene, and Carbofuran.

This system has been tested according to NSF/ANSI 42/53 for the reduction of the substances listed below. The concentration of the indicated substances in water entering the system was reduced to a concentration less than or equal to the permissible limit for water leaving the system, as specified in NSF/ANSI 42/53.

Substance Reduction Aesthetic Effects	NSF Reduction Requirements	Average Influent	Influent Challenge Concentration	Maximum Effluent	Average Effluent	Minimum % Reduction	Average % Reduction
Chlorine Taste/Odor Particulate Class II*	50% reduction 85% reduction	2.0182 mg/L 1333333 #/mL	2.0 mg/L ± 10% At least 10,000 particles/mL	0.06 mg/L 6600 #/mL**	0.0536 mg/L 2325 #/mL	97.03 99.51	97.34 99.83
Contaminant Reduction	**NSF Reduction Requirements**	**Average Influent**	**Influent Challenge Concentration**	**Maximum Effluent**	**Average Effluent**	**Minimum % Reduction**	**Average % Reduction**
Lead: @ pH 6.5*** Lead: @ pH 8.5***	0.010 mg/L 0.010 mg/L	0.1533 mg/L 0.1400 mg/L	0.15 mg/L ± 10% 0.15 mg/L ± 10%	0.0005 mg/L 0.0007 mg/L	0.0005 mg/L 0.0006 mg/L	99.67 99.50	99.67 99.57
Mercury: @ pH 6.5 Mercury: @ pH 8.5	0.002 mg/L 0.002 mg/L	0.0058 mg/L 0.0059 mg/L	0.006 mg/L ± 10% 0.006 mg/L ± 10%	0.0002 mg/L 0.0005 mg/L	0.0002 mg/L 0.0003 mg/L	96.54 91.57	96.54 94.92
Benzene	0.005 mg/L	0.0154 mg/L	0.015 mg/L ± 10%	0.0012 mg/L	0.0006 mg/L	92.22	96.34
O-Dichlorobenzene	0.6 mg/L	1.7571 mg/L	1.8 mg/L ± 10%	0.0250 mg/L	0.0066 mg/L	98.58	99.63
Toxaphene	0.003 mg/L	0.015 mg/L	0.015 mg/L ± 10%	0.001 mg/L	0.001 mg/L	93.33	93.33
Carbofuran	0.04 mg/L	0.0819 mg/L	0.08 mg/L ± 10%	0.0400 mg/L	0.0213 mg/L	51.13	74.00

Test Parameters: pH = 7.5 ± 0.5 unless otherwise noted. Flow = 0.5 gpm (1.9 Lpm). Pressure = 60 psig (413.7 kPa). Temp. = 68°F to 71.6°F (20°C to 22°C).

- It is essential that operational, maintenance, and filter replacement requirements be carried out for the product to perform as advertised.
- Use replacement cartridge T2RFWG2, part #4396841. In Canada, use replacement cartridge T2RFWG2, part #4396841B. 2006 suggested retail price of $39.99 U.S.A./ $49.99 Canada. Prices are subject to change without notice.

  Model T1WG2L: Style 1 – Press FILTER to check the status of your water filter. If the filter indicator light is yellow, order a new filter. If the filter indicator light is red, it is recommended that you replace the filter.

  Style 2 – When the filter indicator reads 10%, order a new filter. When the filter indicator reads 0%, it is recommended that you replace the filter.

  Model T1WG2: Change the water filter cartridge every 6 months depending upon your usage. If the water flow to the water dispenser or ice maker decreases noticeably before 6 months have passed, replace the water filter cartridge more often.
- These contaminants are not necessarily in your water supply. While testing was performed under standard laboratory conditions, actual performance may vary.
- The product is for cold water use only.
- Do not use with water that is microbiologically unsafe or of unknown quality without adequate disinfection before or after the system.
- Refer to the “Assistance or Service” section for the Manufacturer’s name, address and telephone number.
- Refer to the “Warranty” section for the Manufacturer’s limited warranty.

Application Guidelines/Water Supply Parameters	
Water Supply	City or Well
Water Pressure	30 - 120 psi (207 - 827 kPa)
Water Temperature	33° - 100°F (0.6° - 37.8°C)
Service Flow Rate	0.5 gpm (1.9 Lpm) @ 60 psi

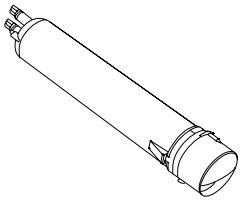

*Class II particle size: 1 um to <5 um
**Test requirement is at least 100,000 particles/mL of AC Fine Test Dust.
***Compliant for Lead reduction requirements under NSF/ANSI Standard 53 as tested by Pace Analytical Services, Inc.
® NSF is a registered trademark of NSF International.

Monogram®

ZET3038SH/WH/BH – GE Monogram 30" Built-In Single Oven with Trivection™ Technology

Dimensions (in inches)
30" Built-In Single Oven Dimensions (in inches)

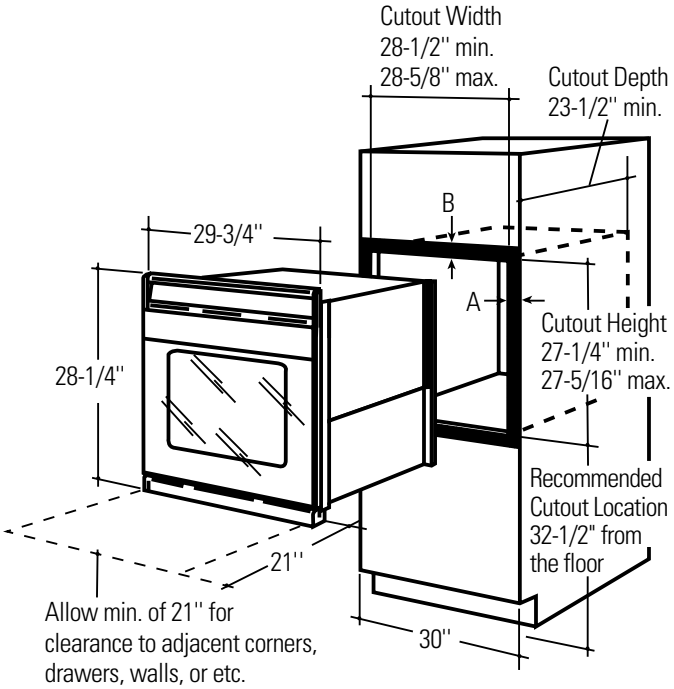

A = Allow 11/16" - 3/4" for overlap of oven over side edges of cutout.
B = Allow 1" overlap of oven over top and 1-1/4" overlap at the bottom edges of cutout.

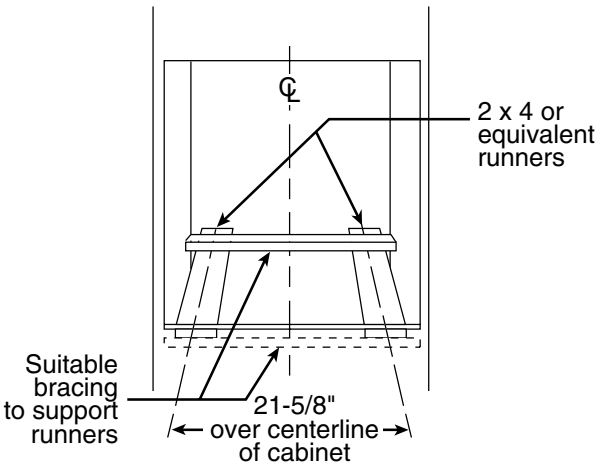

(Must support 225 lbs.)

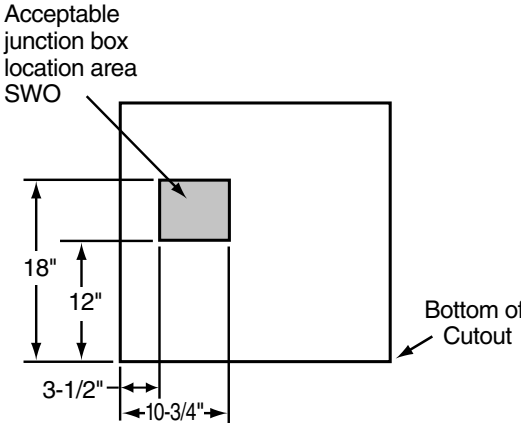

KW Rating	
240V	5.9
208V	4.4
Breaker Size	
240V	30 Amps
208V	30 Amps

Note: These ovens are not approved for stackable or side-by-side installations.

Note: Cabinets installed adjacent to wall ovens must have an adhesion spec of at least a 194°F temperature rating.

Installation Information: Before installing, consult installation instructions packed with product for current dimensional data.

Electric wall ovens are not approved for installation with a plug and receptacle. They must be hard wired in accordance with installation instructions.

Listed by Underwriters Laboratories

For answers to your Monogram,® GE Profile™ or GE® appliance questions, visit our website at GEAppliances.com or call GE Answer Center® service, 800.626.2000.

Specification Revised 6/04
130311

Monogram®

ZET3038SH/WH/BH – GE Monogram 30" Built-In Single Oven with Trivection™ Technology

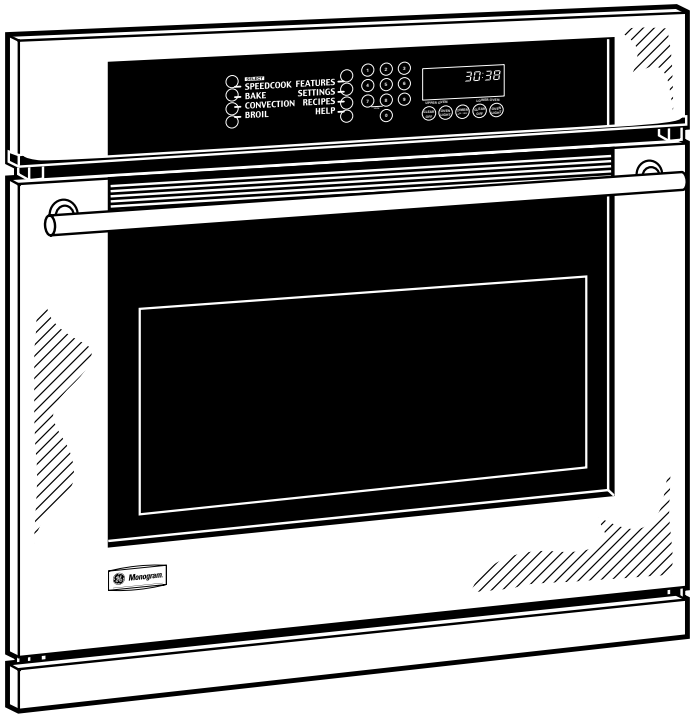

Features and Benefits

- Trivection technology – Combines thermal, convection and microwave energies to produce quality food remarkably fast
- Sophisticated styling
- Cooking versatility
- Full-size oven capacity
- Glass touch electronic controls
- Halogen interior light
- Model ZET3038SHSS – Stainless steel
- Model ZET3038WHWW – White
- Model ZET3038BHBB – Black

CU 40

CU 40

THE GE MONOGRAM COLLECTION™

Search: Go

Home | **Products** | What's New | Where to Buy | Monogram Living | Literature

GE Monogram® 30" Built-In Single Wall Oven with Trivection® Technology

Model#: ZET3038SHSS

Print This Page

Email This Page

Features & Photos | Product Details | Parts & Related Products | Product Documentation

Photo Gallery

Monogram.

Visit your local dealer for pricing

WHERE TO BUY

APPROXIMATE DIMENSIONS (HxDxW)	
28 1/4 in x 23 1/4 in x 29 3/4 in	

CAPACITY	
Oven Capacity	4.3

FEATURES	
Configuration	Single
Control Type	Electronic Touch
Cooking System	Reverse Air Convection
Cooking Technology	Trivection®
Oven Interior	Self-Clean
Oven Style	30" Single Oven
6-Pass Broil Element	Yes
Convection Bake	Multi/Single Rack Bake
Convection Roast	Yes
Proof Mode	Yes
Speed Bake	Yes
Speed Broil	Yes
Thermal Bake / Thermal Roast	Yes
Digipad Numeric Entry	Yes
Defrost Mode	Yes
Help Mode	Yes
Auto Oven Shut-Off with Override	Yes
Auto Recipe™ Conversion	Yes
Automatic Self-Clean Oven Door Lock	Yes
Certified Sabbath Mode	Yes
Control Lock Capability	Yes
Delay Bake Option With Warm Mode	Yes
Electronic Clock & Kitchen Timer	Yes
Embossed Rack Positions	5
Light Self Clean Mode	Yes
Oven Racks	3 Heavy-Duty
Start Pad	Yes
Temperature Display	Yes
Variable Broil	Yes
Variable Cleaning Time w/Delay Clean Option	Yes
Audible Preheat Signal	Yes
Interior Oven Light	Halogen

CU 40

CU 41

CU 41

Oven Light Pad	Yes
Broiler Pan and Grid	Yes
Undercounter Installation	Yes

APPEARANCE	
Color Appearance	Stainless Steel
Color Appearance Code	SS
Design	Integrated

WEIGHTS & DIMENSIONS	
Approximate Shipping Weight	198.00 lb
Net Weight (lbs.)	178.00 lb
Overall Depth	23 1/4 in
Overall Height	28 1/4 in
Overall Width	29 3/4 in
Cabinet Width	30 in
Cutout Dimensions (w x h x d) (in.)	29-3/4 x 28-1/4 x 23-1/2
Oven Interior Dimensions (W x H x D) (in.)	24 x 17-1/2 x 17-1/2
Overall Oven Interior Dimensions	24 x 17-1/2 x 17-1/2

POWER / RATINGS	
Amp Rating at 208V	21.2
Amp Rating at 240V	24.6
Bake Wattage	Dual 2500/900W
Broiler Wattage	2500W
Convection Wattage	2500W
KW Rating at 208V	4.4
KW Rating at 240V	5.9

ACCESSORIES	
Trivection® Cookbook	Included

WARRANTY	
Parts Warranty	Limited 1-year entire appliance
Labor Warranty	Limited 1-year entire appliance
Warranty Notes	For models produced on or after January 1, 2006 See written warranty for full details

CU 41

CU 41

CU
42

Induction welcomes you

The secret of induction is simple. Make the cookware the heat source. From this idea, induction technology was born. With Diva Induction Cooktops, you can expect faster heat, better control and a cooler kitchen.

The principle of induction revolves around electromagnetic energy. An alternating current is created by the induction coil, in turn, creating a magnetic field that transfers to the cookware which excites the metal molecules creating heat. In short, only the cookware heats up. Take an egg, for example: when the frying pan is in contact with the induction zone, the egg cooks. But the egg will not cook on the glass surface, which remains cold.

Induction has come a long way since its introduction in the 80s. The Diva Induction Cooktop has 3 to 4 times the power and is better designed to meet consumer demands.

Inside exist 3.6 kW generators which create thousands of BTUs of power... enough to make any professional chef jealous. These generators are governed by a state-of-the-art electronic nerve center which monitors everything from cooktop temperatures, to interior temperatures, to fluctuating power flow through the induction coils. And to think, all this from the simple touch of a button.

CU
44

DIVA

CU
44

The minimalist design

The face of our cooktops are both simple and beautiful. Concentric cooking areas neatly outline the glass surface. Unlike traditional burners, they do not rise obtrusively, but are incorporated into the sleek design. Diva Induction Cooktops are configured with 6” and 9” coils. This wide surface area creates room for pans ranging in size from 4-7 inches in diameter for the 6” coil, and pans 7-10 inches for the 9” coil.

CU 45

DIVA

CU 45

The Multiple Crown Burner, or Central Burner, consists of an expandable 11” coil (available on the DDP-5 and DDP-3). By utilizing a pan recognition sensor built into the coil, it can automatically adapt itself to accommodate pans ranging in size from 4” to 14”. This feature is exclusive to Diva Induction.

Easiest of all, they are powered by your fingertips on a flat control pad built into the glass. It is smooth to the touch and incorporates a “capacitive” technology that has precise pressure sensitivity and cannot be affected by different lighting conditions. It offers 12 power settings and 3 presets for medium, high and maximum outputs.

CU 46

So amazing you could kiss it

Really, give her a peck; she won't hurt you. Whether they are turned on or off, the surface on our cooktops remain cool, making the only undesirable part of cooking – cleaning – a breeze.

In addition, this eliminates the danger of burns – a nice feature if you have young children. It's the safest cooktop around because every inch of the cooking surface other than that of the cookware remains cool as a cucumber. This is because induction directs electromagnetic energy, not heat, directly into your cookware, pot or whatever dish your recipe calls for. That means there is no risk if you leave a spoon nearby, or your wedding band rests by the burner as you stir your famous chocolate marnier sauce. You can even prop a child upon the cooktop to let he or she watch your culinary genius at work.

Power

Make no mistake. The Diva Induction Cooktops are the most powerful cooktops on the market. With an output of 3600 Watts, Prometheus would be jealous. Boil water in half the time of the most powerful gas or electric burner. Cook a Holiday meal in half the time it took last year. In fact, you would need a 25,000 BTU gas burner just to match their power.

Also, the cooking zones can provide full power to each burner or can share the power when two or more burners are engaged. Such unprecedented technology in a cooktop creates a dual benefit: speed and power. Adjust from maximum to just a mere 50 Watts simmer, or bring a simmer back to a roaring boil in seconds, instead of waiting minutes.

Remarkably, all this power creates less energy waste. With an efficiency of over 90%, compared to 50% for gas or even 60% for other electric technologies, induction heats fast using less, therefore, wasting less. The result is inductive, a substantial energy savings of 17-30% over energy consumed by standard cooking technologies. Even when compared to a microwave, nothing can match the speed, power and safety of the Diva Induction Cooktop.

Makes and models

DDP-2

12” Induction Cooktop with 2 cooking zones.

Total Cooktop Power:	3.6 kW
Maximum power per zone:	
Front (6”):	2.2 kW
Back (9”):	2.8 kW

2 integrated front touch controls with
12 power levels and 3 presets
(medium, high & maximum)
with built-in safety features
for overflow & overheating

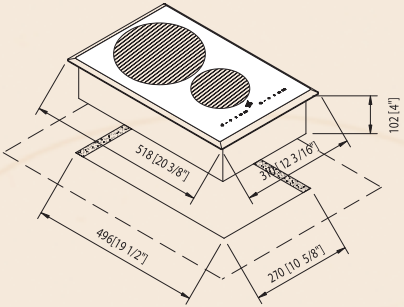

Installation:

Power:	Electric/3.6 kW
Voltage/Amps:	240V/20A
Phase:	2 Pole

Dimensions:

Overall:	12 3/16” x 20 3/8” x 4”
Cut-out:	10 5/8” x 19 1/2” x 5 5/8”
Weight:	20 Lbs/ 24 Lbs (net/gross)

DDP-3

24” Induction Cooktop with 3 cooking zones.

Total Cooktop Power:	7.6 kW
Maximum power per zone:	
Left Rear (6”):	1.2 kW
Left Front (9”):	3.0 kW
Right (11”):	4.0 kW

One integrated touch control with
9 power levels and built-in safety features
for overflow & overheating

Installation:

Power:	Electric/7.6 kW
Voltage/Amps:	240V/40A
Phase:	2 Pole

Dimensions:

Overall:	23 15/16” x 21 5/16” x 2 1/2”
Cut-out:	22 1/4” x 19 11/16” x 4”
Weight:	31 Lbs/ 34 Lbs (net/gross)

NEW

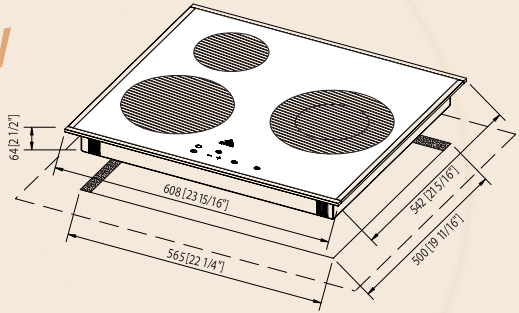

To ensure maximum power for each coil, the DDP-3 induction cooktop measures the amount of voltage available and compensates for lower voltage by increasing the amperage used. This technology is specially designed for lower voltage living accommodations (208V).

Makes and models

DDP-4 (Available in black & white glass)
30” Induction Cooktop with 4 cooking zones.

Total Cooktop Power:	7.2 kW
Maximum power per zone:	
Left (9”):	2.8 kW
Center Front (6”):	2.2 kW
Center Back (6”):	2.2 kW
Right (9”):	2.8 kW

4 integrated front touch controls with
12 power levels and 3 presets
(medium, high & maximum)
with built-in safety features
for overflow & overheating

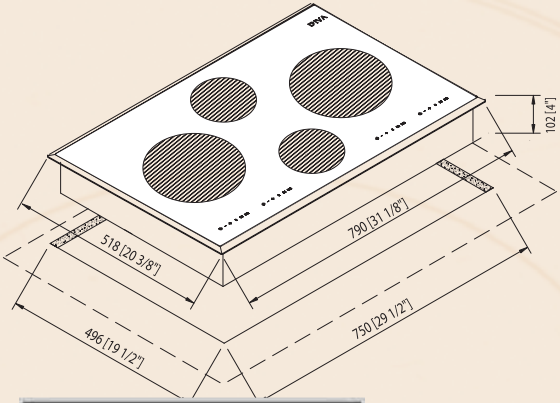

Installation:

Power:	Electric/7.2 kW
Voltage/Amps:	240V/40A
Phase:	2 Pole

Dimensions:

Overall:	31 1/8” x 20 3/8” x 4”
Cut-out:	29 1/2” x 19 1/2” x 5 5/8”
Weight:	45 Lbs/ 50 Lbs (net/gross)

DDP-5 (Available in black & white glass)
36” Induction Cooktop with 5 cooking zones including 1 Large Central Zone.

Total Cooktop Power:	9.6 kW
Maximum power per zone:	
Front Left (9”):	2.8 kW
Front Right (6”):	2.2 kW
Center Expandable (6”-11”):	3.6 kW
Back Left (6”):	2.2 kW
Back Right (9”):	2.8 kW

5 integrated front touch controls with 12 power levels and 3 presets (medium, high & maximum) with built-in safety features for overflow & overheating

Installation:

Power:	Electric/9.6 kW
Voltage/Amps:	240V/50A
Phase:	2 Pole

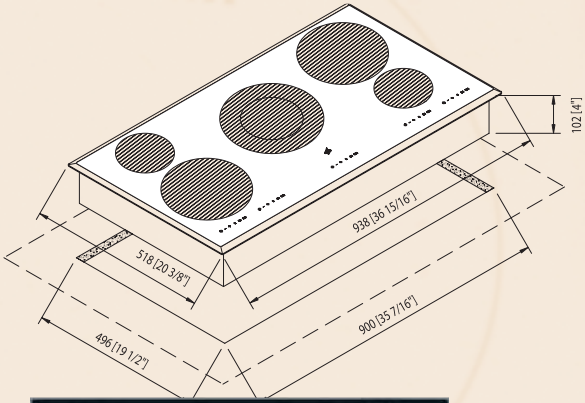

Dimensions:

Overall:	36 15/16” x 20 3/8” x 4”
Cut-out:	35 7/16” x 19 1/2” x 5 5/8”
Weight:	60 Lbs/ 65 Lbs (net/gross)

PASCO, Paris 33 1 47 86 82 82
March, 2007

CU
53

DDP 02/06

Approved by:

Diva de Provence
885 Don Mills Road, Suite 207
Toronto,Ontario
M3C 1V9
C a n a d a
Tel: (416) 256-2646
Fax: (416) 256-7121

Quick Installation Guide - DDP-4

To install the unit, create a cut-out in your countertop following the dimensions given on the drawing and the table below.

This cooktop must be installed in accordance with pertaining local building, trade, fire protection and electrical codes. If local codes do not exist, then installation must be done in accordance with federal codes.

The cooktop is to be connected - hard-wired - to the electrical power supply inside a client-supplied junction box which should be installed inside the cabinet below the unit.
The unit must be properly grounded.

This cooktop is to be installed under a ventilation hood or a downdraft ventilation system.

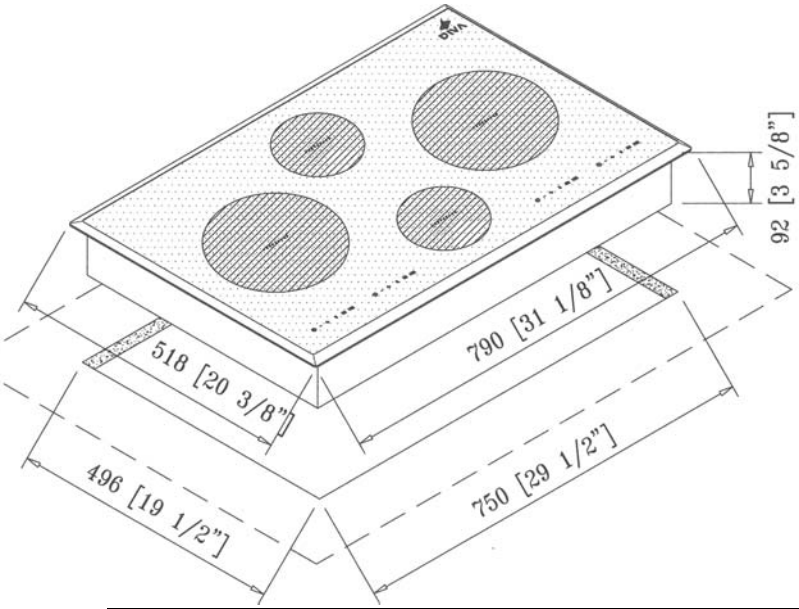

DDP-4 electrical characteristics are:

Operating voltage ... 240 V~ 60 Hz
Total power ... 7200 W
Connect to ... 240 V, 60 Hz, 2 Pole+G, 40 A supply (3 wire #8 AWG)

Cooktop and Cut-out Sizes	Width	Depth	Thickness
Cut-out Size	750 mm [29 1/2"]	496 mm [19 1/2"]	142 mm* [5 5/8"]*
Cooktop Box Size	743 mm [29 1/4"]	488 mm [19 7/32"]	92 mm [3 5/8"]
Cooktop Rim Size	790 mm [31 1/8"]	518 mm [20 3/8"]	10 mm [25/64"]

*This dimension includes clearance underneath the unit of 50 mm [2"]

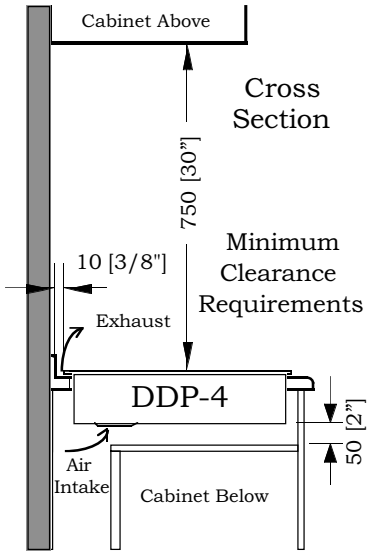

Clearance

You should keep:

- **In the back of your unit** - between the unit and any vertical surface: minimum clearance of **10 mm (3/8")**;

- **If a downdraft ventilation system is used** - between the unit and the downdraft snorkel: minimum clearance of **6 mm (1/4")**;

- **Above the unit to any combustible surface -** e.g. cabinet above the unit: minimum clearance of **750 mm (30")**;

- **Below the unit** - between the bottom of the unit and any horizontal partition inside your cabinet: minimum clearance of **50 mm (2")**.

KitchenAid® Undercounter Dishwasher

PRODUCT MODEL SERIES

KUDD01DPPA

Electrical: A 120-volt, 60 Hz, AC-only, 15-amp fused electrical supply is required. (Circuit breaker or time-delay fuse is recommended.) It is recommended that a separate circuit serving only this appliance be provided.

The 3 prong grounded outlet must be installed within 6" (15.2 cm) to 18" (45.7 cm) of the cabinet side wall.

If you plan to install a garbage disposer, an additional separate 120-volt, 60 Hz, AC-only, 15- or 20-amp fused electrical supply is required.

Water: A hot water line with 4.3-145 psi (30-1000 kPa) water pressure must be used. Water temperature must be minimum 120°F (49°C) at dishwasher. An easily accessible valve with 3/8" compression fitting must be installed in the hot water supply line.

OVERALL DIMENSIONS

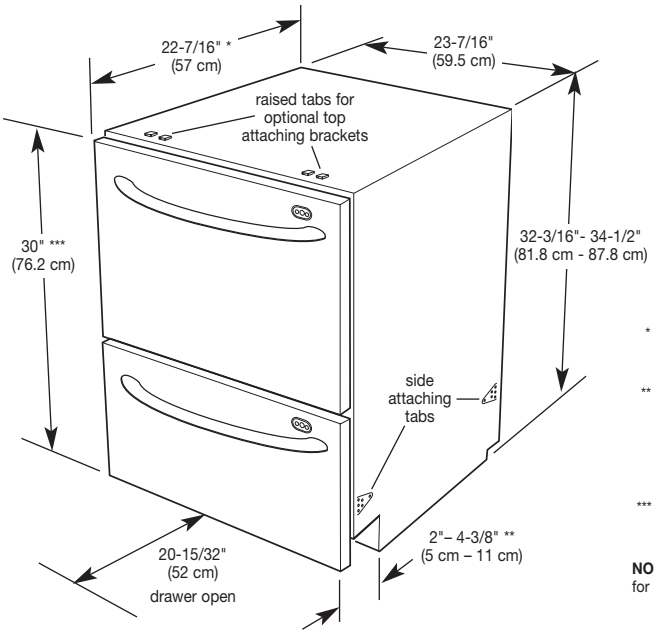

* If custom wood panels are to be used, the product depth is specified with an 11/16" (18 mm) door panel thickness.

** Toe panel depth: Factory supplied, 2–4-3/8" (5 – 11 cm); Custom wood, 5" (12.7 cm) less the toe panel thickness for integrated. Minimum panel thickness using the supplied screws is 3/8" (9 mm).

*** Door front height: Factory supplied – 30" (76.2 cm); Custom wood – 28-1/4" (71.8 cm) minimum.

NOTE: Product shown with front panels for dimension purposes.

CABINET OPENING DIMENSIONS

***IMPORTANT:** Custom wood door panels, if used, may be wider than the dishwasher to match surrounding cabinets. The 23-5/8" (60.0 cm) must be increased so that there is a 1/4" (6.4 mm) clearance between the cabinet side and panel edge.

For corner installation, there must be a 1/2" (12.7 mm) space between the adjacent cabinet doors (i.e. door knobs) and open dishwasher drawer.

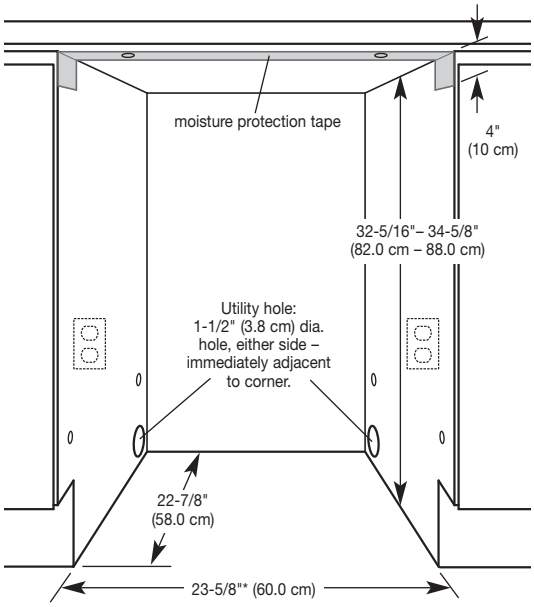

DRAIN OPTIONS

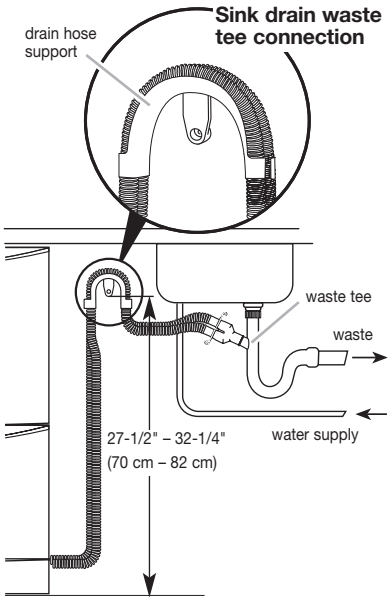

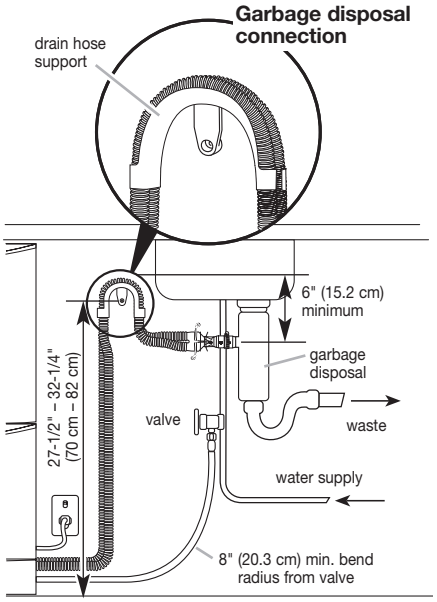

Air break connection

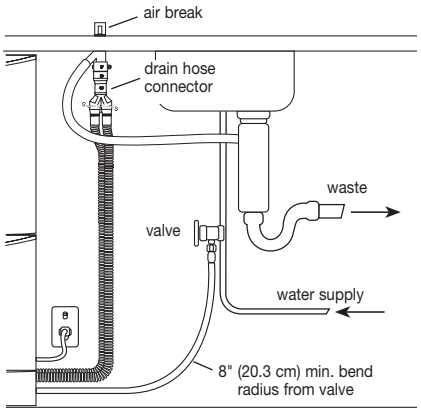

Dimensions are for planning purposes only. For complete details, see Installation Instructions packed with product. Specifications subject to change without notice.

Ref. 8546446
12-2-04

KitchenAid® Double Drawer Dishwasher Custom Door Panel Requirements

MODEL: KUDD01DPPA

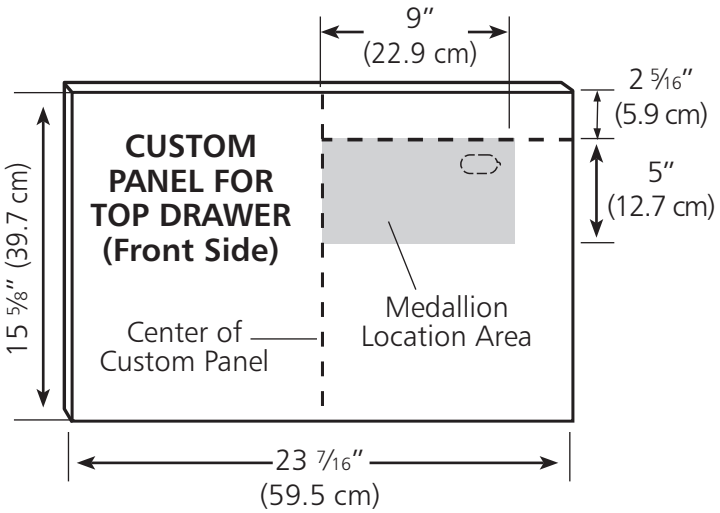

FIGURE 1A

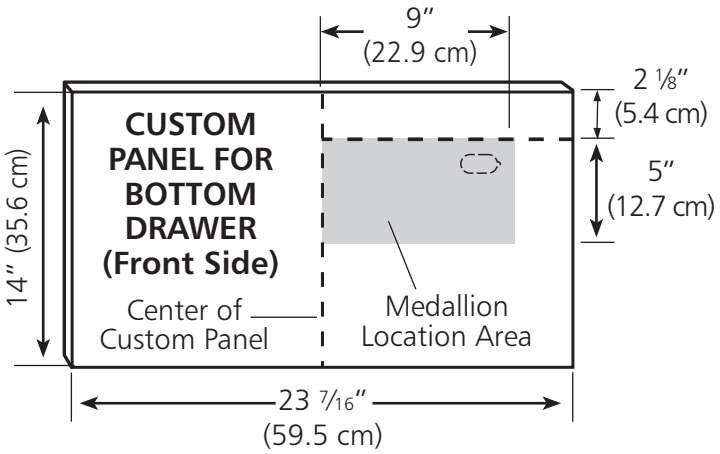

FIGURE 1B

MEDALLION CUTOUT DIMENSIONS FOR TOP AND BOTTOM DRAWER CUSTOM PANELS

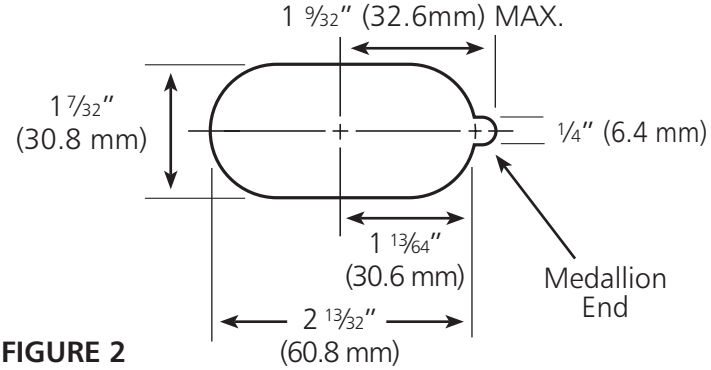

FIGURE 2

IMPORTANT: It is recommended that the top and bottom custom door panels be made from suitable material to withstand damp conditions or adequately sealed with a moisture-resistant material to withstand moisture and humidity.

1) Cut the top drawer custom door panel to size as shown *(See figure 1A)*. The custom panels may be wider than the dishwasher in order to match the surrounding cabinets.

   NOTE: The minimum custom panel thickness is 5/8″ (16mm). Panel thickness more than 11/16″ (18mm) can be accommodated but overall product depth will increase accordingly.

2) Cut the bottom drawer custom door panel to size as shown *(See figure 1B)*. The custom panels may be wider than the dishwasher in order to match the surrounding cabinets.

   NOTE: The minimum custom panel thickness is 5/8″ (16mm). Panel thickness more than 11/16″ (18mm) can be accommodated but overall product depth will increase accordingly.

3) On the front sides of both the top and bottom drawer custom door panels, measure and mark the location of the customer supplied handle. The location is customer preference. Do not install handles at this time.

4) On the front side of the top drawer custom door panel, measure, mark and cut a hole for the medallion to size as shown *(See figures 1A & 2)*.

   NOTE: The medallion must be placed within the specified medallion area. Do not locate outside of this specified area *(See figure 1A)*.

5) On the front side of the bottom drawer custom door panel, measure, mark and cut a hole for the medallion to size as shown *(See figures 1B & 2)*.

   NOTE: The medallion must be placed within the specified medallion area. Do not locate outside of this specified area *(See figure 1B)*.

6) Lay the top and bottom drawer custom door panels face down on a protective surface to prevent damage or abrasions.

KitchenAid® Double Drawer Dishwasher Custom Door Panel Requirements

MODELS: KUDD01DPPA

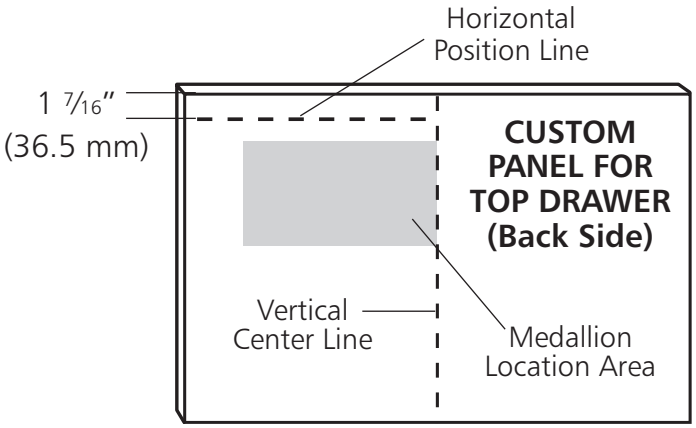

FIGURE 3A

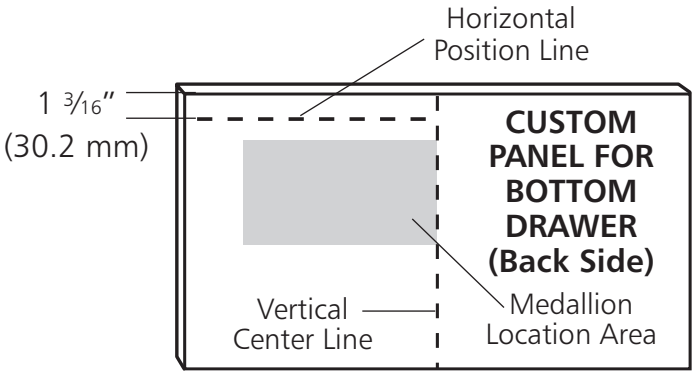

FIGURE 3B

7) On the back side of the top drawer custom door panel, rout a ¼" (6.4 mm) radius around the medallion cutout previously cut in step #4. The medallion end does not need to be routed.

8) On the back side of the bottom drawer custom door panel, rout a ¼" (6.4 mm) radius around the medallion cutout previously cut in step #5. The medallion end does not need to be routed.

9) If custom door panel material is not suitable to withstand damp conditions, seal with a moisture resistant material. For painted panels, paint all rear edges to improve sealing.

10) On the backside of the top drawer custom door panel, measure and mark the vertical center line and horizontal position line *(See figure 3A)*.

    NOTE: The 1 7/16" (36.5 mm) horizontal position line is marked for later use in the installation process. Refer to the *Installation Instructions Drawer Dishwasher* included with the Drawer Dishwasher to align and attach the top drawer custom door panel to the factory supplied metal plate.

11) On the backside of the bottom drawer custom door panel, measure and mark the vertical center line and horizontal position line *(See figure 3B).*

    NOTE: The 1 3/16" (30.2 mm) horizontal position line is marked for later use in the installation process. Refer to the *Installation Instructions Drawer Dishwasher* included with the Drawer Dishwasher to align and attach the bottom drawer custom door panel to the factory supplied metal plate.

12) Mount the customer supplied handles to the locations previously marked on the top and bottom drawer custom panels.

    IMPORTANT: When mounting the customer supplied handles, screws must fit flush to the panel and not extend beyond the back surface.

13) Refer to the *Installation Instructions Drawer Dishwasher* included with the Drawer Dishwasher to complete installation.

ASKO WCAM1812

COMBINATION WASHER/DRYER

No space?
No ventilation?
No problem!

We created the ASKO Combination Washer/Dryer for people who have dreamed of having in-home laundry capabilities, but don't have space for full-size machines. The new ASKO WCAM1812 has loads of features all packed into one hard-working, space-saving appliance. Perfect for tight quarters, this efficient Combo means the end of shelling out quarters at the public laundromat.

- FULL FEATURES. HALF THE SPACE.
- SUPER-EFFICIENT CONDENSER NEEDS NO VENTILATION.
- BUILT BY ASKO. BACKED BY THE BEST WARRANTY.
- LARGE CAPACITY. MINIMUM DIMENSIONS.

ASKO

am: appliance group

DIMENSIONS

33-1/4”-34" height
23-1/2” width
23-5/8” depth
39” depth with the door open

ASKO WCAM1812

COMBINATION WASHER/DRYER

FULL FEATURES. HALF THE SPACE.

Washer:

- Detergent and fabric softener dispenser
- Overfill protection
- Water containment system
- Pre-wash option
- Three rinses, plus an Extra Rinse option
- Three spin speeds:
  - Delicate (550 rpm)
  - PermaPress (800 rpm)
  - Normal (1200 rpm)

Dryer:

- Drying times: 40 to 140 minutes
- Air fluff: 20 minutes
- Cool-down cycle
- Wrinkle-reducing auto-reversing action
- End-of-program light

SUPER-EFFICIENT CONDENSER NEEDS NO VENTILATION.

- Seamless transition from washing to drying
- Internal moisture-condensing drying

YOUR FAVORITE PROGRAMS.

- Regular: Heavy Stain, Colorfast, Color, Quick Wash
- Synthetics: Heavy Stain, Colorfast, Color
- Delicate: Wool/Hand Wash

BUILT BY ASKO.

- Stainless Steel inner and outer tanks
- Four-shock suspension
- Average water consumption: 20-gallons per wash program
- 110/115 volt, 15 amp
- 1300 watt heating element
- Internal water heater with temperature boost to 140º F
- ADA height compliant

BACKED BY THE BEST WARRANTY.

- Three years – full parts and labor

LARGE CAPACITY. MINIMUM DIMENSIONS.

- Large capacity drum
- Easy controls
- Each unit is 100% factory-tested

am: appliance group

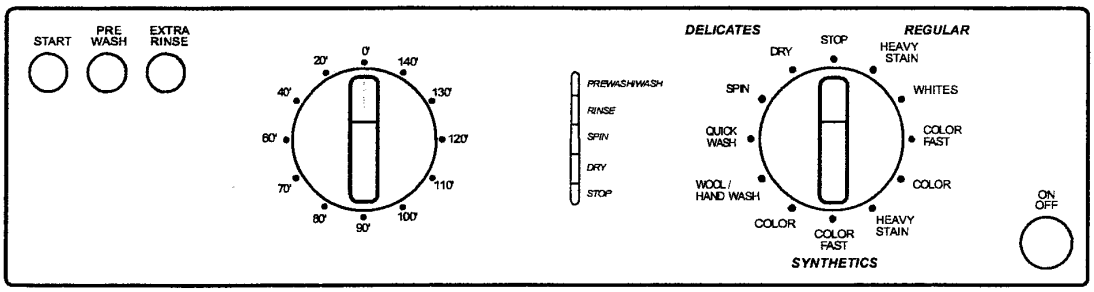

PO Box 851805
Richardson, Texas 75085-1805

WWW.ASKOUSA.COM

CUSD2007

interior materials

SPECIFICATION SHEET

INDIVIDUAL PRODUCT INFORMATION
(order follows specification sheet)

Material	Location	Company/ brand	Color/ Type	Flame Spread	Smoke Density	VOC content	MSDS	product environ reponsibility	Cmpany Environ. responsibility
marine plywood	ship cont floor/ subfloor	unknown		?	?	unknown	no	existing material	
MDF	cabinetry	Sierra Pine		Class A combustible			yes	Formaldehyde free, 100% Post Consum	yes
gypsum board	all interior	Georgia Pacific	ToughRock MH Wall Board 1/2"	10	5	?	yes	recycled content, recyclable	yes
bamboo	kitchen/bath cabinetry	Smith&Fong Plyboo	Dark Strand, 3Ply Plyboo				yes	fast regrowth	yes
linoleum	living rm/ bedrm (SIP)	Forbo Marmoleum	Silver ShadowClick Tiles #53860	?	?	0		all natural materials	yes
Paper composite	kitchen/bath counter	Richlite	Black	25	40	99% free	yes	FSC certified, nontoxic	yes
HDPE	kitchen backsplash/mech closet d	3form Varia (class B)	Ecoresin 1/2" Fossil Leaf	<65	<450		yes	min 40% recycled content, recyclable	yes
HDPE	bath dr/ shower dr	3form Chroma	1"Aegean, 1"Aquamarine	"pass CC2"	<75		yes	recyclable	yes
Porcelain tile	Bath/entry	Coverings, Etc.	Dover White	0		VOC free	no	recycled content	yes
carpet	living rm/ bedrm (SIP)	Flor	Fedora	?	?	low VOC	no	recycled content	yes
paint	all interior	AMF Safecoat Semiglos	white	?	?	0	yes	VOC free, formaldehyde free	yes
VOC sealer	ship cont floor/ subfloor	AMF SafeSeal		?	?	0	yes	VOC free , Formaldehyde free	yes
watersealer	bathroom floor	Thompson WaterSeal		?	?	85 ppv	yes	low VOC in market	
backer board	bathroom	Georgia Pacific	DensShield Tile Backer 1/4"	0	0	?	yes		yes

CU
61

Products - Marine

Faces	A-A
Bond	A-Bond
Stress Grade	F17
Emissions	E0 (Formaldehyde Emission Class)
Standard	AS/NZS 2272 - 2006
Core Gaps	Nil (view picture)
Thicknesses	1.5, 3, 4, 6.5, 9.5, 12.5, 16, 19, 25, 32mm

Marine Plywood

Marine Plywood manufactured to AS/NZS 2272 - 2006 has a permanent Type A phenolic bond. It is manufactured from selected species based on density, bending strength, impact resistance and surface finishing characteristics. Austral Plywoods marine plywood is manufactured from plantation Hoop Pine, a designated marine specie.

Preservative Treatment

None of the marine species are naturally durable and preservative treatment is required in marine plywood used in many marine environments such as boat hulls, pontoons and marina applications.

All cut edges should therefore be re-treated in situ. As most preservatives affect resorcinol bonding, advice should be sought from adhesive and preservative manufacturers if gluing of preservative treated plywood is intended.

Structural Properties

Hoop Pine marine plywood manufactured by Austral Plywoods possesses a stress grade of F17. This superior stress grade is attributable to our premium Hoop Pine resource, the efficient utilisation of that resource, and a commitment to quality manufacture. Marine plywood manufactured to BS1088, as imported into Australia, does not have predictable structural performance.

Grading

Marine plywood to AS/NZS 2272 - 2006 has two A grade faces and a Type A bond. In the Australian Standards grading system therefore it has a grading of AA-A bond. There is no second grade marine plywood.

Usage

Marine plywood to AS/NZS 2272 - 2006 should be used in hulls of boats and where specified in other marine applications and in aircraft construction. Marine plywood to overseas standards must not be substituted for AS/NZS 2272 - 2006 marine plywood. For assured performance marine plywood should be branded with the "EWPAA Tested" marine plywood stamp.

Austral Plywoods Pty Ltd - www.australply.com.au - sales@australply.com.au - Ph +61 7 3426 8666 - Fax +61 7 3426 8667

innovation
creativity
market expertise
manufacturing excellence

SierraPine MDF: **Precision,** *versatility,* variety

SierraPine MDF

SierraPine MDF is one of the most versatile product lines in the composite panel industry. With the ability to cut precision parts with tolerances within 0.005" and produce panels ranging in thicknesses from ¼" – 2¼", there is a SierraPine MDF product to meet every need.

Environmental Certification

One of SierraPine's core values is our commitment to the environment, and "Green Leadership." We were among the first in the industry to earn environmental certification at all of our plants from Scientific Certification Systems (SCS).

Acting as an independent third-party, SCS certifies SierraPine's use of recovered and recycled wood fiber at each of our plants and the company's certification must be audited by SCS annually.

SierraPine MDF is made from 100% recovered and recycled wood fiber with at least 60% post-industrial recycled fiber; the balance consisting of recovered waste fiber.

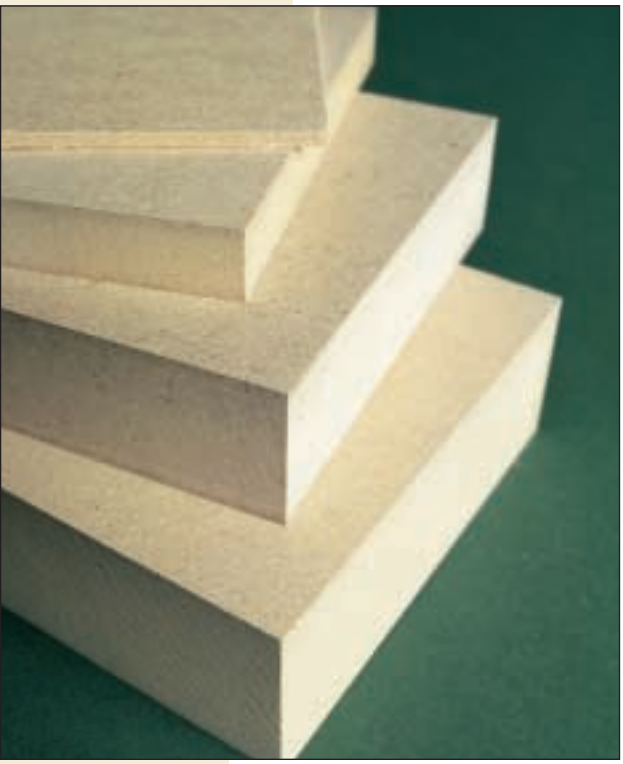

Features/Benefits

Product Performance:

- Light color
- Excellent machinability
- Minimal toolwear

Mill Capabilities

- Extensive, precise cut-to-size capability
- Precision stiles and rails for flush doors
- Cut stock for door jambs and mouldings

Panel sizes

Available in sizes up to 5' x 17' and in thicknesses from ¼" to 2¼".

Handling/Installation

SierraPine MDF should be stored indoors on a flat, level surface with adequate support to prevent sagging. It will readily accept and hold hardware including staples, screws and other fasteners.

Applications

- Door parts
- Cabinet & furniture components
- Architectural woodwork
- Long span desktops

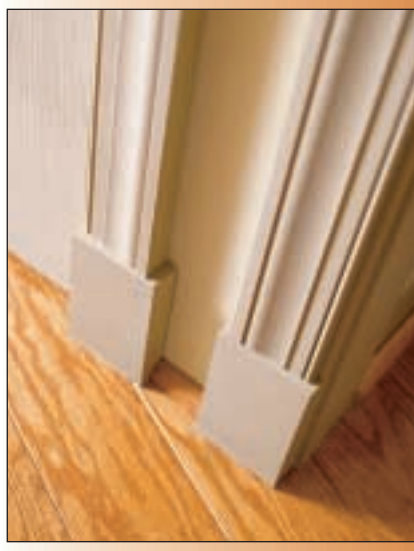

SierraPine LTD
COMPOSITE SOLUTIONS

Technical Data

Average Physical Properties based on 3/4".

Imperial

Property		Thicknesses ¼" – ½"	9/16" – 1"	1 1/16" – 1½"	1½"
Density	lb/ft³	49	48	45	45
Internal Bond	lb/in²	100	100	90	90
Modulus of Rupture	lb/in²	3,500	3,200	3,000	3,000
Modulus of Elasticity	lb/in²	350,000	320,000	300,000	300,000
Thickness Tolerance	inches	±.005	±.005	±.005	±.005

Property		Thicknesses 1¾"	2"	2 1/16" – 2¼"
Density	lb/ft³	41	38	33
Internal Bond	lb/in²	80	80	80
Modulus of Rupture	lb/in²	2,900	2,800	2,500
Modulus of Elasticity	lb/in²	290,000	280,000	250,000
Thickness Tolerance	inches	±.005	±.005	±.005

Metric

Property		Thicknesses 6-13 mm	14-25 mm	27 – 38 mm	38 mm
Density	kg/m³	780	760	720	720
Internal Bond	kg/cm²	7.0	7.0	6.3	6.3
Modulus of Rupture	kg/cm²	240	220	210	210
Modulus of Elasticity	kg/cm²	24,600	22,490	21,090	21,090
Thickness Tolerance	mm	±.127	±.127	±.127	±.127

Property		Thicknesses 44 mm	51 mm	52 – 57 mm
Density	kg/m³	650	600	520
Internal Bond	kg/cm²	5.6	5.6	5.6
Modulus of Rupture	kg/cm²	200	190	170
Modulus of Elasticity	kg/cm²	20,380	19,680	17,570
Thickness Tolerance	mm	±.127	±.127	±.127

SierraPine LTD
COMPOSITE SOLUTIONS
3010 Lava Ridge Court, Suite 220 • Roseville, CA 95661
(800) 676-3339 • (916) 772-3422 • Fax: (916) 772-3415
www.sierrapine.com

MEMBER COMPOSITE PANEL ASSOCIATION

AWI ARCHITECTURAL WOODWORK INSTITUTE

Warning: SierraPine MDF contains formaldehyde, which may cause health problems including eye and respiratory irritation and may aggravate respiratory conditions or allergies. It should not be used in enclosed areas where formaldehyde could be a problem unless properly sealed. Information on effective sealing methods and materials is available from SierraPine.

CERTIFIED • Recycled and Wood Fiber Content SCIENTIFIC CERTIFICATION SYSTEMS www.scsglobal.com

Certificate of Achievement

Scientific Certification Systems (SCS) does hereby certify that an independent evaluation has been conducted on behalf of:

SierraPine Limited

Rocklin , CA

for the following product(s):

SierraPine™ MDF, and SierraPine™ Thin MDF

This product(s) meets all of the necessary qualifications to be certified for the following claim(s):

100% Pre-consumer Recycled Wood Fiber
(dry fiber basis)

SCS

Signed

10/1/2005 to 9/30/2006

Certification Period

Registration Number: SCS-RRC-01098

CU 65

G-P Gypsum

DensArmor Plus™

Paperless Interior Drywall

Mold and Moisture Resistant

PAPERLESS SOLUTIONS

CU
66

Product Overview

Areas of Use

Interiors of exterior walls, *where moisture intrusion is most likely.*

Pre-rock areas, *where the windows, doors or roof have not been installed making moisture intrusion inevitable.*

Areas likely to be exposed to moisture, *where paper-faced greenboard may have been specified in the past.*

For years, DensGlass Gold®, an exterior sheathing with glass mat facings, has been proven tough in commercial construction – under the most challenging of elements. Now the same powerful protection is working on the inside – all with the next-generation DensArmor Plus™ paperless interior glass mat gypsum panels.

DensArmor Plus panels feature a glass mat surface on both the front and the back for the best in interior protection from moisture currently available. The moisture resistant glass mats make DensArmor Plus panels the ideal replacement for paper faced greenboard. A revolutionary departure from traditional wallboard, the face of DensArmor Plus panels finishes in a similar manner to paper-faced wallboard and offers superior performance in resisting mold.

Integrating DensArmor Plus panels into your specifications is part of an overall building solution that addresses the mold issue and reduces the time and expense of replacing alternative products if they become wet.

When tested, as manufactured, in accordance with ASTM D 3273, DensArmor Plus interior panels scored a 10, the highest level of performance for mold resistance under the ASTM D 3273 test method. The score of 10, in the ASTM D 3273 test, indicates no mold growth in a 4-week controlled laboratory test. The mold resistance of any building product when used in actual job site conditions may not produce the same results as were achieved in the controlled, laboratory setting. No material can be considered mold proof. When properly used with good design, handling and construction practices, products with Dens™ Technology provide increased mold resistance compared to standard paper faced wallboard.

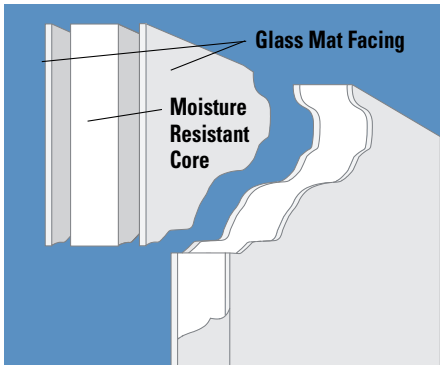

- **Paperless design eliminates a potential food source for mold.**
- **Replaces traditional paper faced drywall and greenboard.**
- **Paperless design may reduce remediation and scheduling delays associated with paper faced drywall.**
- **Backed with a limited warranty against in-place exposure damage (delamination, deterioration and decay)*.**

**For complete warranty, visit www.gpgypsum.com*

G-P Gypsum Products and LEED

Many of our products may qualify to contribute to earning LEED credits through their Green Building Rating System for *New Construction & Major Renovations Version 2.1* (LEED-NC 2.1) and other current LEED building standards. Determine the G-P Gypsum plant source by calling the GP Technical Hot-Line at 800-225-6119, and you may qualify for points in the following LEED categories:

Materials and Resources
- Recycled Content Credits 4.1 and 4.2
- Regional Materials Credits 5.1 and 5.2

Innovation in Design Credit
- When tested, as manufactured, product resists growth of mold pursuant to the test method ASTM D 3273

Table of Contents

Physical Properties

Properties	1/2" DensArmor Plus™	1/2" DensArmor Plus™ Fireguard™ C	5/8" DensArmor Plus Fireguard
Thickness, nominal	1/2" (12.7mm) ± 1/64" (0.4mm)	1/2" (12.7mm) ± 1/64" (0.4mm)	5/8" (15.9mm) ± 1/64" (0.4mm)
Width, standard	4' (1220mm) ± 3/32" (2.4mm)	4' (1220mm) ± 3/32" (2.4mm)	4' (1220mm) ± 3/32" (2.4mm)
Length, standard	8' (2440mm) to 12' (4880mm) ± 1/4"(6.4mm)	8' (2440mm) to 12' (4880mm) ± 1/4"(6.4mm)	8' (2440mm) to 12' (4880mm) ± 1/4"(6.4mm)
Weight[1], lbs./M sq. ft.,nominal	2020[1]	2020[1]	2570[1]
Edges	Tapered	Tapered	Tapered
Surfacing	Coated glass mat on face, back	Coated glass mat on face, back	Coated glass mat on face, back
Flexural strength, parallel, lbs.[4]	80	80	100
Flexural strength, perpendicular[4]	100	120	140
R Value[2]	.56	.56	.67
Nail pull resistance minimum, lbs.	80	80	90
Hardness, lbs. force, core, edges and ends	>15	>15	>15
Water absorption (% of weight)[5]	<5%	<5%	<5%
Surface water absorption[6]	<1.6 grams	<1.6 grams	<1.6 grams
Surface burning characteristics (per ASTM E 84 or CAN/UL-S102): flame spread/smoke developed	10/5	10/0	10/5
Humidified deflection, inches[3,4]	2/8"	2/8"	1/8"

[1]Represents approximate weight for design and shipping purposes.
[2]Tested in accordance with ASTM C 518.
[3]Maximum requirements for ASTM C 1177 and ASTM C 79.
[4]Tested in accordance with ASTM C 473.
[5]Maximum requirements for ASTM C 630 and ASTM C 1396.
[6]Maximum requirements for ASTM C 1396 and ASTM C 79.

NOTE: Specified minimum values are as in applicable ASTM C 630, ASTM C 1396 and ASTM C 1177 standards.

Abuse Resistant Properties
5/8" DensArmor Plus is more resistant to indentation (*when tested in accordance with ASTM D 5420*) and impact (*when tested in accordance with ASTM E 695*) than traditional paper faced 5/8" Type X wallboard.

NOTE: Based on tests of products stocked in Atlanta, GA area; average values may vary.

Limited Warranty

DensArmor Plus™ Interior Panels are based on proven and patented paperless Dens™ Technology, which has a lengthy history of performance. Based on that track record, G-P Gypsum Corporation backs the performance of DensArmor Plus with the following limited warranty:*

- Three months of coverage against in-place exposure damage (delamination, deterioration and decay)
- A three-year warranty against manufacturing defects.

**For complete warranty details, visit www.gpgypsum.com or call 1-800-225-6119.*

Application

1. DensArmor Plus™ panels shall be installed in accordance with ASTM C 840 "Standard Specifications for Application and Finishing of Gypsum Board."
2. For fire rated installations, the installation and details shall be in conformity with those assemblies published in the Gypsum Association Fire Resistance Design Manual GA-600, UL/ULC Fire Resistance Directory or Intertek Testing Services/ Warnock Hersey Listing Book.
3. Nails shall be spaced a maximum of 7" (177.8 mm) on center on ceilings, and a maximum of 8" (203.2 mm) on center on walls.
4. Nails shall be driven with the heads slightly below the surface of the gypsum board, avoiding damage to the face and core of the board, such as breaking the glass mat or fracturing the core.
5. Screws shall be spaced not more than 12" (304.8 mm) on center along the framing members for ceilings and 16" (406.4 mm) on center for walls where the framing members are 16" on center. Screws shall be spaced not more than 12" on center along the framing members for ceilings and walls where framing members are 24" (609.6 mm) on center.
6. When using a combination of fasteners consisting of nails along the perimeter and screws in the field of the gypsum board, the spacing between a nail and an adjacent screw shall be not more than the spacing specified for screws.
7. Screws shall be driven to provide screw head penetration just below the DensArmor Plus panel surface without breaking the glass mat surface of the panel or stripping the framing member around the screw shank.
8. Where DensArmor Plus panels are used for ceilings of carports, open walkways, porches and soffits or eaves that are horizontal or inclined downward away from the building, the DensArmor Plus panels shall be either 1/2" or 5/8" (12.7 or 15.9 mm) in thickness. Framing shall be not more than 16" (406 mm) on center for 1/2" (12.7 mm) thick DensArmor Plus panels and not more than 24" (610 mm) on center for 5/8" (15.9 mm) thick DensArmor Plus panels. The DensArmor Plus panels shall be installed perpendicularly in accordance with the specifications above except as herein modified.
9. Suitable fascia and moulding shall be provided around the perimeter to protect the DensArmor Plus panels from direct exposure to water. Unless protected by metal or other water stops, the edges of the DensArmor Plus panel shall be placed not less than 1/2" (12.7 mm) away from abutting vertical surfaces. Do not allow water to pond on DensArmor Plus panels.
10. DensArmor Plus panels can be used as a tile backerboard in dry areas or areas with limited moisture contact such as areas adjacent to sinks and toilets, bathroom ceilings and areas above tile in shower areas. In wet areas where 2006 IBC and IRC codes have been adopted G-P Gypsum recommends the use of DensShield® Tile Backer, which incorporates a built-in moisture barrier in wet areas.

    Where DensArmor Plus panels are to receive adhesively applied tile, the panel can be used on ceilings where ceiling framing is spaced not more than 12" o.c. (304.8 mm) for 1/2" (12.7 mm) thick panels and not more than 16" o.c. (406 mm) for 5/8" (15.9 mm) thick panels. (editor's note: this is to conform with IBC section 2509.3 and GA-216-2004 section 15.3.2)
11. All materials shall be kept dry prior to installation. Where DensArmor Plus panels are stored out side, it shall be off the ground, properly supported on a level platform and fully protected from the weather or direct sunlight exposure. Adequate ventilation shall be provided to prevent condensation. DensArmor Plus panels shall be neatly stacked flat, not on their ends or edges, to prevent toppling, sagging or damage to the ends, edges, or surfaces.
12. Where DensArmor Plus is to receive a veneer plaster, longer working or open time as well as longer drying times can be expected due to the superior moisture resistance properties of DensArmor Plus. Veneer plasters adhere well to DensArmor Plus. Always apply veneer plaster systems according to manufacturer's recommendations.

Installation and Decoration

A mock up or test wall should be used to ensure the proposed decorative finish will produce an acceptable result. Proper installation, finishing and priming are critical. Skipping a step, such as the application of a primer; or taking shortcuts, such as not using proper sanding techniques, will negatively impact the quality of the final decorative finish.

Installation

DensArmor Plus™ panels are installed in a similar manner to traditional paper faced drywall. DensArmor Plus should be installed according to the most current versions of Gypsum Association Publication GA-216 "Application and Finishing of Gypsum Panel Products" and ASTM C 840 "Standard Specification for Application and Finishing of Gypsum Board for Non-Fire Rated Construction."
For best results, abut DensArmor Plus panels against regular paper faced drywall only at inside or outside corners to eliminate transitions in the field of a wall or ceiling. Adjust fastening tools to insure that the fasteners are not over-driven through the face of the panel. Nails and screws should be driven with the heads slightly below the surface of the panel.

Finishing

The finishing and sanding of DensArmor Plus panels should be performed in accordance with the most current version of Gypsum Association Publication GA-214 "Recommended Levels of Gypsum Board Finish." Joints between DensArmor Plus panels may be finished with either paper tape embedded with all purpose joint compound or (for a paperless surface) with fiberglass mesh tape and setting compound. Because of the enhanced moisture and mold resistant properties of DensArmor Plus, drying times for the joint and setting compounds may vary slightly. It is essential to allow each coat of compound to dry thoroughly before applying additional coats of compound. Care should be taken to ensure that all joints and fasteners are properly and adequately sanded to provide a smooth transition between the compound and the face of the panel.

Critical (Severe) Lighting Areas and Gloss Paints

When using gloss, semi-gloss or enamel paint, or when working in a critical (severe) lighting area, always finish DensArmor Plus panels to a "Level 5" finish as detailed in GA-214. Critical lighting areas include but are not limited to walls and ceiling areas near windows and skylights, long hallways and atriums with large surface areas exposed to artificial and/or natural light. Refer to GA-214 for additional examples.

Priming and Painting

For best results when painting DensArmor Plus, G-P Gypsum requires the use of a high quality, high build drywall primer/surfacer. Follow the application instructions of the primer manufacturer stated on the container. G-P Gypsum recommends that the high build primer be applied at a sufficient wet film thickness to ensure a dry film thickness that will produce acceptable results. Always use a test wall or mock up because different application techniques, such as back rolling, and variations in wet film thickness (or milage) may be required to offer pleasing results. The number of coats of finish paint and the total dry film thickness of the finish coats needed for acceptable results will depend on the paint used. The finish coats of paint must be applied according to the manufacturer's label instructions.

Wallcoverings

Because of the enhanced moisture and mold resistant properties of DensArmor Plus, drying times for the wallcovering adhesives and primers may vary slightly. Some wallcoverings, such as an unbacked vinyl wallcovering, require a "Level 5" finish as detailed in GA-214 when applied over DensArmor Plus panels. Avoid the use of wallcovering material over a "Level 4" finish if the material is lightweight, contains a limited pattern, has a gloss finish or any combinations of these elements is present as detailed in GA-214. Always follow wallpaper and adhesive manufacturer's installation instructions.

Because many factors that are unrelated to the manufacture of the panels can affect the acceptability of the final finish result, G-P Gypsum makes no warranty, express or implied, regarding the finish results to be achieved with DensArmor Plus panels.

Maximum Framing Spacing for Single-Ply Construction[1]

Single-Ply DensArmor Plus™ Panel Thickness, in. (mm)	Application[2]	Maximum Framing Members on Centers Spacing, in. (mm)
Ceilings:		
Non-Tile Applications		
1/2" (12.7)	parallel	16 (406.4)
5/8" (15.9)	parallel	16 (406.4)
1/2" (12.7)	perpendicular[1]	24 (609.6)
5/8" (15.9)	perpendicular	24 (609.6)
Tile Applications		
1/2" (12.7)	perpendicular	12 (305)
5/8" (15.9)	perpendicular	16 (406.4)
Walls:		
1/2" (12.7)	perpendicular	24 (609.6)
or	or	
5/8" (15.9)	parallel	24 (609.6)

[1] *DensArmor Plus™ panels to receive hand or spray-applied water-based texture material shall be applied perpendicular.*

[2] *Nails for DensArmor Plus panels applied over existing surfaces shall have a flat head and diamond point, and shall penetrate not less than 7/8" (22.2) mm), nor more than 1-1/4" (31.8 mm) into the framing member.*

Ceiling Applications

DensArmor Plus is the ideal choice for both interior ceilings and exterior soffits. It meets the requirements for CD ceiling board.

Moisture resistant DensArmor Plus™ is the ideal choice for Ceiling Board applications over wet areas and in kitchen and interior garage areas. It has tapered edges for easy finishing and resists moisture that can cause problems with traditional ceiling board which have paper facers.

Soffit Applications, Fastening, Framing and Finishing

Moisture resistant paperless DensArmor Plus™ is the ideal choice for exterior soffits, porch and lanai ceilings, and drive-under garages. It has tapered edges for easy finishing.

Traditional gypsum exterior ceiling board has paper facers. Paper is a potential food source for mold. DensArmor Plus has glass mats on each side instead of paper and is moisture resistant.

Thickness	Framing Spacing	Orientation	Screw Spacing
1/2"	16" o.c. max	Perpendicular	8" o.c. along framing
5/8"	24" o.c. max	Perpendicular	8" o.c. along framing

	1/2" DensArmor Plus™	1/2" Gypsum Soffit Board	5/8" DensArmor Plus™	5/8" Gypsum Soffit Board
Humidified Deflection[1] (Sag)[2, 3]	2/8"	7/8"	1/8"	4/8"
Water Absorption[2, 3]	<5%	40+%	<5%	40+%
Surface Water Absorption[2, 3]	<1.6 grams	2.5 grams	<1.6 grams	2.5 grams
Surface	Glass mat	Paper	Glass mat	Paper

[1] *Maximum requirement for ASTM C 79.*
[2] *Maximum requirement for ASTM C 1177.*
[3] *Tested in accordance with ASTM C 473.*

Soffit Applications, Fastening, Framing and Finishing

Painted Ceilings and Soffits
Finished Joints

A. DensArmor Plus™
B. 2" 10 x 10 Glass Mesh Tape
C. Drip Edge
D. ToughRock® Setting Compound
E. Finish Coats

**Sandable setting compounds are not recommended.*

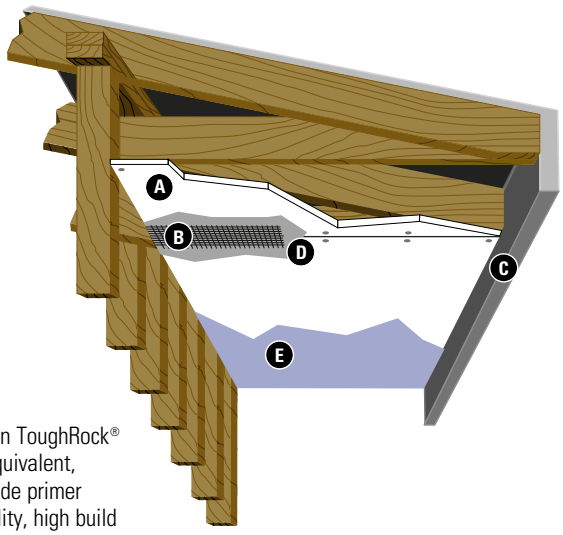

Finishing

Method #1

Embed 2" wide fiberglass mesh tape in ToughRock® 90 Setting Type joint compound, or equivalent, over all joints. Prime with exterior-grade primer and finish with two coats of high quality, high build exterior-grade paint.

Exterior Ceilings and Soffits

A. DensArmor Plus™
B. Drip Edge
C. Reinforcing Mesh/Base Coat*
D. Base Coat*
E. Finish Coat*

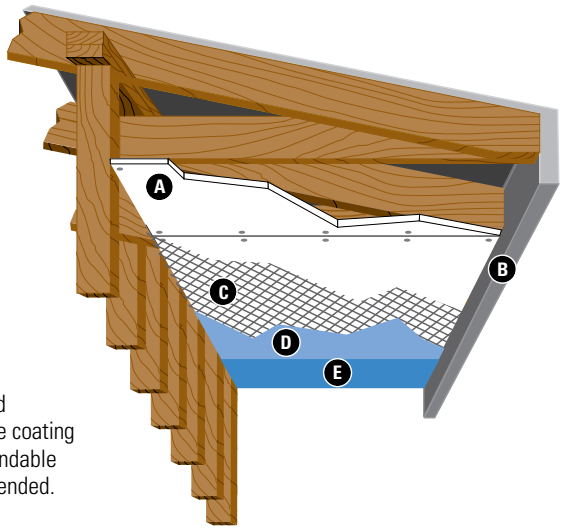

Finishing

Method #2

*Apply a synthetic-type Direct Applied Finish System in accordance with the coating manufacturer's recommendation. Sandable setting compounds are not recommended.

Special Conditions:

1. Control joints are recommended a minimum of 30 feet or closer as specified by the design authority.
2. Protection from the elements shall be provided prior to installing DensArmor Plus in horizontal applications to prevent moisture from ponding or settling on top of the panel.
3. Sandable setting compounds are not acceptable for use over DensArmor Plus in exterior soffit applications.
4. GP ToughRock 90 joint compound is not available in all markets. It is permissible to use setting-type joint compounds from other manufacturers that are equivalent to ToughRock 90 joint compound.

Where DensArmor Plus panels are used for ceilings of carports, open walk ways, porches and soffits or eaves that are horizontal or inclined downward away from the building, the DensArmor Plus panels shall be either 1/2" or 5/8" (12.7 or 15.9mm) in thickness. Framing shall be not more than 16" (406mm) on center for 1/2" (12.7mm) thick DensArmor Plus panels and not more than 24" (610mm) on center for 5/8" (15.9mm) thick DensArmor Plus panels. Suitable fascia and moulding shall be provided around the perimeter to protect the DensArmor Plus panels from direct exposure to water. Unless protected by metal or other water stops, the edges of the gypsum panel shall be placed not less than 1/2" (12.7 mm) away from abutting vertical surfaces. Do not allow water to pond on DensArmor Plus panels.

Paperless Solutions for Fire and Sound Rated Assemblies

DensArmor Plus™ panels are offered in 1/2" Fireguard™ C and 5/8" Fireguard X core types for use in fire-rated assemblies. These panels can be used in any G-P Gypsum or non-proprietary assembly where Type C/Type X gypsum board is required.

1-Hour Fire Rating

Test Reference: UL U305, ULC W301

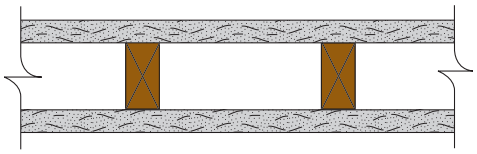

30-34 STC Sound Trans.

Test Reference: OR 64-8
Partition Thickness: 4-7/8"
Weight per Sq. Ft.: 7.0

5/8" DensArmor Plus™ Fireguard Interior gypsum board applied parallel or at right angles to each side of 2 x 4 wood studs 16" o.c. with 1-7/8" 6d coated nails spaced 7" o.c. Joints staggered. (UL U309, studs 24" o.c.)

2-Hour Fire Rating

Test Reference: UL U301

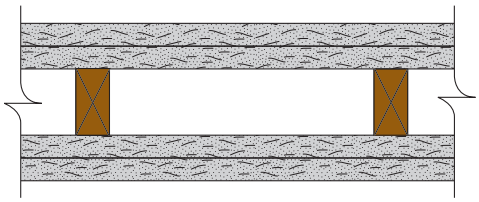

40-44 STC Sound Trans.

Test Reference: NGC-2363
Partition Thickness: 6-1/8"
Weight per Sq. Ft.: 12.0

Base Layer: 5/8" DensArmor Plus Fireguard Interior gypsum board applied vertically or at right angles to each side of 2 x 4 wood studs 24" o.c. with 1-7/8" 6d coated nails 24" o.c.

Face Layer: 5/8" DensArmor Plus Fireguard Interior gypsum board applied vertically or at right angles to studs over base layer with 2-3/8" 8d coated nails 8"o.c. Stagger joints 24" o.c. each layer and side.

Sound Tested with studs 16" o.c. and with nails for base layer spaced 6" o.c.

1-Hour Fire Rating

Test Reference: UL U465, ULC W415

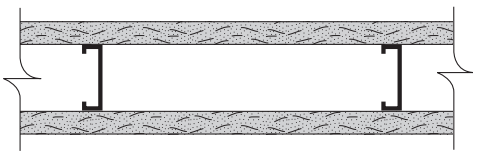

45-49 STC Sound Trans.

Test Reference: RAL TL99-103
Partition Thickness: 4-7/8"
Weight per Sq. Ft.: 6.0

5/8" DensArmor Plus Fireguard Interior gypsum board applied vertically to each side of 3-5/8" steel studs 24" o.c. with 1" Type S drywall screws 8" o.c. at edges and 12" o.c. at intermediate studs.

Sound Tested with 2-1/2" glass fiber insulation, friction fit in cavity

2-Hour Fire Rating

Test Reference: UL U411

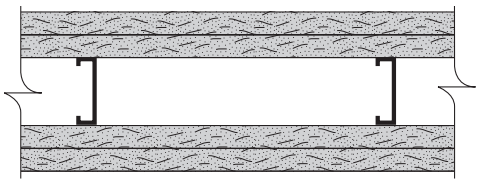

50-54 STC Sound Trans.

Test Reference: WHI 218-1
Partition Thickness: 5"
Weight per Sq. Ft.: 12

Base Layer: 5/8" DensArmor Plus Fireguard Interior gypsum board applied parallel to each side of 2-1/2" steel studs 24" o.c. with 1-1/4" Type S screws 16" o.c.

Face Layer: 5/8" DensArmor Plus Fireguard Interior gypsum board applied parallel to each side with drywall adhesive or secured with 1-5/8" Type S screws 12" o.c. at top and bottom track, 16" o.c. at edge joints only. Stagger joints 24" each layer and side.

Sound Tested with 2-1/2" glass fiber insulation

Paperless Area Separation Wall Section Detail

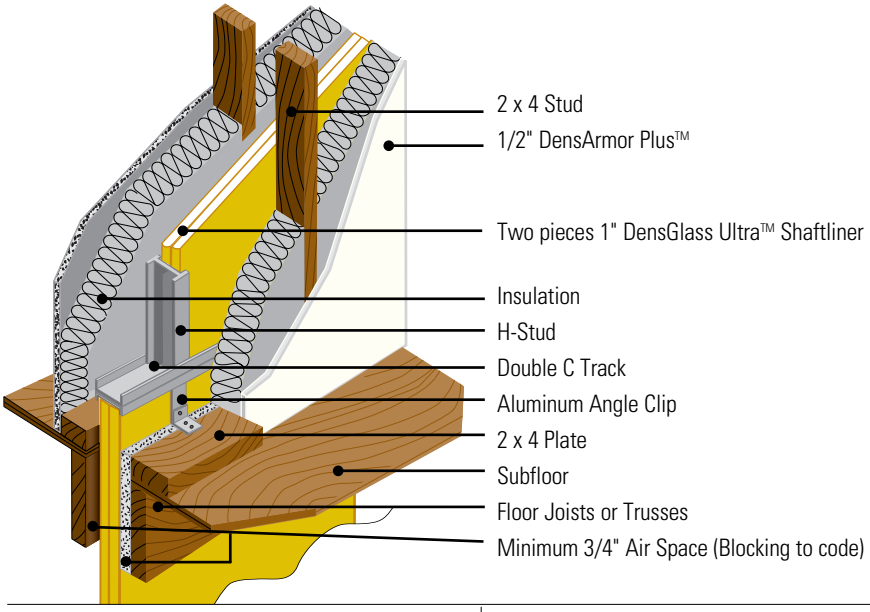

Area Separation 2-Hour Fire Rating

Test Reference: UL DESIGN U373, WHI 120-04

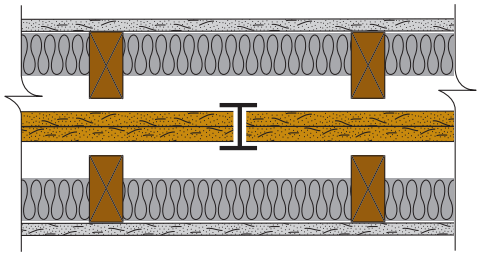

60 STC Sound Trans.

Test Reference: RAL TL89-383

Two layers 1" DensGlass Ultra Shaftliner inserted in H-Studs 24" o.c. Min. 3/4" air space on both sides must be maintained between liner panels and adjacent framing. Apply 1/2" DensArmor Plus panels to framing.

Sound Tested with 2" x 4" stud wall with 1/2" DensArmor Plus panels to each side of assembly and 3-1/2" glass fiber in stud space both sides.

Paperless Shaftwall/Stairwell Design Summary Vertical

Series 620 2-Hour Fire Rating

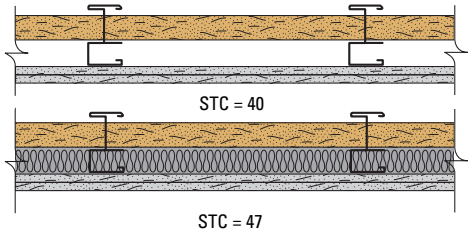

40, 47 STC Sound Trans.

Test Reference: GA File #, WP 7096, WHI Design, GP/WA 120-01

Approx. Weight: 9 psf

Glass fiber sound insulation thickness is 1", 2-1/2" and 3-1/2" for C-T, C-H or I studs of 2-1/2", 4" and 6" respectively. Finished one side. Components: 1" DensGlass Ultra Shaftliner panel, C-T studs and two layers of 1/2" DensArmor Plus™ Fireguard® C installed horizontally or vertically. Edges and ends offset 24" o.c.

C-T, C-H or I Stud	2-1/2"	4"	6"
Wall Thickness	3-1/2"	5"	7"

Series 621 2-Hour Fire Rating

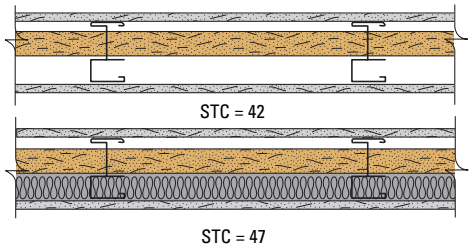

42, 47 STC Sound Trans.

Test Reference: WHI Design, GP/WA 120-02

Approx. Weight: 9 psf

Glass fiber sound insulation thickness is 1", 2-1/2" and 3-1/2" for C-T, C-H or I studs of 2-1/2", 4" and 6" respectively. Finished both sides with 1/2" DensArmor Plus Fireguard C installed horizontally or vertically. Edges and ends offset 24" o.c.

C-T, C-H or I Stud	2-1/2"	4"	6"
Wall Thickness	3-1/2"	5"	7"

Architectural Specifications

SECTION 09 29 00

GYPSUM BOARD

THIS SECTION IS WRITTEN IN CSI 3-PART FORMAT AND IN CSI PAGE FORMAT.

IT IS ASSUMED THAT THE GENERAL CONDITIONS BEING USED ARE AIA A201-1997.

PART 1 GENERAL

1.01 SUMMARY

A. Section Includes: Glass mat faced, moisture resistant gypsum board.

B. Related Sections:
1. Section 06 10 00 Rough Carpentry.
2. Section 09 21 16 Gypsum Board Assemblies.
3. Section 09 22 00 Supports for Plaster and Gypsum Board.

C. Allowances:

D. Unit Prices:

E. Alternates:

1.02 REFERENCES

A. ASTM International (ASTM):
1. ASTM C 473 Standard Test Methods for Physical Testing of Gypsum Panel Products.
2. ASTM C 518 Standard Test Method for Steady-State Thermal Transmission Properties by Means of the Heat Flow Meter Apparatus.
3. ASTM C 630 Standard Specification for Water-Resistant Gypsum Backing Board.
4. ASTM C 840 Standard Specification for Application and Finishing of Gypsum Board.
5. ASTM C 1177 Standard Specification for Glass Mat Gypsum Substrate for Use as Sheathing.
6. ASTM C 1396 Standard Specification for Gypsum Board.
7. ASTM D 3273 Standard Test Method for Resistance to Growth of Mold on the Surface of Interior Coatings in an Environmental Chamber.
8. ASTM E 84 Standard Test Method for Surface Burning Characteristics of Building Materials.

1.03 SUBMITTALS

A. Product Data: Manufacturer's specifications and installation instructions for each product specified.

1.04 QUALITY ASSURANCE

A. Regulatory Requirements: Provide products that comply with the following limits for surface burning characteristics when tested per ASTM E 84:
1. Flame spread: 25, maximum.
2. Smoke developed: 450, maximum.

PART 2 PRODUCTS

2.01 MANUFACTURERS

A. G-P Gypsum, a Georgia-Pacific company:
1. Glass Mat Faced Gypsum Board: DensArmor Plus™.
2. Fire-Rated Glass Mat Faced Gypsum Board: DensArmor Plus Fireguard.

2.02 MATERIALS

A. Glass Mat Faced Gypsum Board:
1. Thickness: 1/2 inch.
2. Width: 4 feet.
3. Length: 8 feet.
4. Weight: 2020 pounds per M square feet.
5. Edges: Tapered.
6. Surfacing: Coated glass mat on face, back, and long edges.
7. Flexural Strength, Parallel (ASTM C 473, ASTM C 1177): Not less than 80 pounds.
8. Flexural Strength, Perpendicular (ASTM C 473, ASTM C 1177): Not less than 100 pounds.
9. R-Value (ASTM C 518): Not less than 0.56.
10. Nail Pull Resistance (ASTM C 473, ASTM C 1177): Not less than 80 pounds.
11. Hardness, Core, Edges, and Ends (ASTM C 473, ASTM C 1396): Not less than 15.
12. Water Absorption (ASTM C 473, ASTM C 630, and ASTM C 1396): Less than 5 percent of weight.

13. Mold Resistance (ASTM D 3273): 10, in a test as manufactured.
14. Acceptable Products:
    a. 1/2 inch DensArmor Plus™ Interior Guard, G-P Gypsum.
    b. 1/2 inch DensArmor Plus Fireguard™ C Interior GuardType C, G-P Gypsum.

B. 5/8 Inch Fire-Rated Glass Mat Faced Gypsum Board:
1. Thickness: 5/8 inch.
2. Width: 4 feet.
3. Length: 8 feet.
4. Weight: 2570 pounds per M square feet.
5. Edges: Tapered.
6. Surfacing: Coated glass mat on face, back, and long edges.
7. Flexural Strength, Parallel (ASTM C 473, ASTM C 1396): Not less than 100 pounds.
8. Flexural Strength, Perpendicular (ASTM C 473, ASTM C 1177): Not less than 140 pounds.
9. R-Value (ASTM C 518): Not less than 0.67.
10. Nail Pull Resistance (ASTM C 473, ASTM C 1177): Not less than 90 pounds.
11. Hardness, Core, Edges, and Ends (ASTM C 473, ASTM C 1396): Not less than 15.
12. Water Absorption (ASTM C 473, ASTM C 630, and ASTM C 1396): Less than 5 percent of weight.
13. Mold Resistance (ASTM D 3273): 10, in a test as manufactured.
14. Acceptable Products:
    a. 5/8 Inch DensArmor Plus Fireguard Interior Guard Type X, G-P Gypsum.

C. 1/2 Inch Fire-Rated Glass Mat Faced Gypsum Board:
1. Thickness: 1/2 inch.
2. Width: 4 feet.
3. Length: 8 feet.
4. Weight: 2020 pounds per M square feet.
5. Edges: Tapered.
6. Surfacing: Coated glass mat on face, back, and long edges.
7. Flexural Strength, Parallel (ASTM C 473, ASTM C 1177): Not less than 80 pounds.
8. Flexural Strength, Perpendicular (ASTM C 473, UL File No. R2717): Not less than 120 pounds.
9. R-Value (ASTM C 518): Not less than 0.56.
10. Nail Pull Resistance (ASTM C 473, ASTM C 1177): Not less than 80 pounds.
11. Hardness, Core, Edges, and Ends (ASTM C 473, ASTM C 1396): Not less than 15.
12. Water Absorption (ASTM C 473, ASTM C 630, and ASTM C 1396): Less than 5 percent of weight.
13. Mold Resistance (ASTM D 3273): 10, in a test as manufactured.
14. Acceptable Products:
    a. 1/2 Inch DensArmor Plus Fireguard Interior Guard Type C, G-P Gypsum.

PART 3 EXECUTION

3.01 INSTALLATION

A. General: In accordance with ASTM C 840 and the manufacturer's recommendations.
1. Manufacturer's Recommendations:
    a. Current "Product Catalog" G-P Gypsum, a Georgia-Pacific company.

3.02 PROTECTION

A. Protect gypsum board installations from damage and deterioration until the date of Substantial Completion.

END OF SECTION 09 29 00

DensArmor Plus™ Paperless Interior Drywall
DensArmor Plus is a new generation paperless drywall designed as a replacement for paper-faced drywall for building interiors. DensArmor Plus drywall incorporates glass mats on the surfaces of the drywall panel instead of paper facings found on traditional drywall. The combination of paperless surfaces and a moisture resistant core provides superior moisture- and mold-resistance when compared to traditional paper-faced drywall. G-P Gypsum offers a **three-month in-place exposure warranty** which means DensArmor Plus can be hung before installing doors and windows. DensArmor Plus installs using the same steps as traditional drywall.

DensGlass Gold® Exterior Sheathing
DensGlass Gold exterior sheathing is a moisture-resistant gypsum panel that can be used for exterior walls, ceilings and soffits. Its paperless, glass-mat facings and moisture-resistant core resist the effects of surface water exposure while providing resistance to mold. With a long established track record, DensGlass Gold sheathing is so weather resistant that it is backed with a **six-month in-place exposure warranty**. DensGlass Gold is the preferred sheathing for use under brick, stone, stucco and EIFS siding materials. DensGlass Gold sheathing is so widely used that its bright GOLD™ color is recognized throughout the industry.

DensShield® Tile Backer
DensShield tile backer is a patented substrate for floor, wall and ceiling ceramic tile installations. Designed with a built-in moisture barrier, DensShield protects tile installations and the wall cavity from the effects of moisture in damp areas such as bathrooms and kitchens. Incorporating glass-mat facings and a moisture resistant core, DensShield is lighter and easier to install than heavy, hard-to-work-with cement board tile backers. The combination of moisture and mold resistance, along with potential labor savings, makes DensShield the superior substrate for ceramic tile in the industry. Georgia-Pacific backs DensShield tile backer with a **lifetime limited warranty when used in residential tile installations**. In addition, DensShield offers a **20 year limited warranty** for its use in commercial applications.

DensGlass Ultra™ Shaftliner
DensGlass Ultra Shaftliner is the ideal component for gypsum board shaft wall/stairwell and area separation wall systems when a fire rating is required. DensGlass Ultra Shaftliner incorporates a moisture and mold resistant, non-combustible gypsum core with paperless glass-mat facings to resist exposure to the elements during the early stages of the construction cycle. Backed by a **six-month in-place exposure warranty**, DensGlass Ultra Shaftliner is the perfect substitute for heavy, expensive masonry construction. It also offers superior moisture and mold resistance compared to traditional paper-faced shaftliner wallboard products.

DensDeck® Roof Board
Versatile DensDeck roof board is utilized in a wide variety of roofing systems for new and re-roofing applications as cover boards, overlayments, underlayments and separator boards. Featuring a combination of fire resistance, strength, moisture resistance and dimensional stability, DensDeck roof board enhances the overall performance of most roofing assemblies and is widely respected and specified by leading roofing system manufacturers. DensDeck roof board, with its paperless glass-mat facings, has been shown to withstand delamination, deterioration, warping and job site damage far more effectively than paper-faced gypsum board or other conventional roofing products, such as wood fiberboard and perlite.

DensDeck Prime® Roof Board
DensDeck Prime roof board from G-P Gypsum combines the superior features of DensDeck roof board, including fire resistance, strength, moisture resistance and dimensional stability, with an enhanced surface treatment. The coated surface of DensDeck Prime provides an ideal substrate for a wide variety of adhered roofing systems by allowing a uniform spread of adhesives, which results in a strong, consistent bond. DensDeck Prime can be used in cold mastic, torch applied modified bitumen as well as fully-adhered, single-ply systems.

DensDeck DuraGuard® Roof Board
DensDeck DuraGuard roof board from G-P Gypsum combines the superior features of DensDeck roof boards, including fire resistance, strength, moisture resistance and dimensional stability, with a durable, low perm, integrated coating. This coating provides an ideal substrate for a wide variety of adhered roofing systems, including self-adhered, hot-mopped membranes, and torched asphaltic systems. The coating assures more uniform spreading of adhesives, an excellent coverage rate, and it enhances the bond strength of membrane system-to-board without the need for field priming with a number of systems.

G-P Gypsum
a Georgia-Pacific company

SALES INFORMATION AND ORDER PLACEMENT

U.S.A.	Midwest:	**1-800-876-4746**	West:	**1-800-824-7503**
	South:	**1-800-327-2344**	Northeast:	**1-800-947-4497**
CANADA	Canada Toll Free:	**1-800-387-6823**		
	Quebec Toll Free:	**1-800-361-0486**		

G-P Gypsum Technical Hotline: U.S.A. and Canada: **1-800-225-6119**

U.S. GREEN BUILDING COUNCIL MEMBER

TRADEMARKS DENS, DENSARMOR PLUS, DENSDECK, DENSDECK DURAGUARD, DENSDECK PRIME, DENSGLASS GOLD, DENSGLASS ULTRA, DENSSHIELD, FIREGUARD, TOUGHROCK and the color GOLD are trademarks of Georgia-Pacific Corporation or one of its subsidiaries.

UPDATES AND CURRENT INFORMATION The information in this document may change without notice. Visit our website for updates and current information.

LIMITATION OF REMEDIES AND DAMAGES Unless otherwise stated in our written limited warranty for these products, our sole liability for any product claim shall be limited to reimbursement of the cost of repair or replacement of the affected product, up to a maximum amount of two times the original purchase price for the affected product. We shall not be responsible under any circumstances for lost profits, damage to a structure or its contents, or indirect, incidental, special or consequential damages. Claims shall be deemed waived if they are not submitted to us in writing within ten days after discovery.

SAFETY CAUTION: Some products contain fiberglass. Fibers and dust may be released from these products during normal handling and may result in skin, eye and respiratory irritation. Avoid breathing dust and contact with the skin and eyes. Follow these standard work practices: Wear a loose-fitting, long-sleeved shirt and long pants, protective gloves and eye protection (goggles or safety glasses with side shields). Wear a dust mask when sanding. Additional protection may be needed when very dusty. Do not use a power saw. For Material Safety Data Sheet or additional information, call 1-800-225-6119 or visit our website.

CU 78

DensArmor Plus®
Paperless Interior Drywall

Georgia-Pacific Gypsum

Georgia-Pacific Gypsum Sustainable Materials Data Sheet

(See MSDS for additional information)

SECTION 1 Product and Company Identification

Product Name: DensArmor Plus® Interior Gypsum Panel. Performance qualities of this product based upon material composition are obtained by referencing ASTM C 1658 and applicable sections of ASTM C 630.

Product Use: Coated Glass Mat Facers, Moisture Resistant Gypsum Interior Panel.

Manufactured by:

Georgia-Pacific Gypsum LLC
133 Peachtree Street
Atlanta, GA 30303
(800) 225-6119 (Technical Information)
(404) 652-5119 (MSDS Request)

Georgia-Pacific Canada, Inc.
Allanburg Road
Thorold, Ontario L2V 3ZB, Canada
(800) 225-6119 (Technical Information)
(404) 652-5119 (MSDS Request)

SECTION 2 Recycled Content *(Percentages are by Weight and Vary by Location) (*LEED Recycled Content Credit 4.1 and 4.2)*

Pre Consumer Recycled Content:	0%
Post Consumer Recycled Content:	0%
Total Recycled Content:	0%

For current Tacoma, WA plant total recycled content information, call the Technical Services Hotline at 1-800-225-6119.

SECTION 3 Local/Regional Materials *(*LEED Local/Regional Materials Credits 5.1 and 5.2)*

Please determine the distance in statute miles to your project site from the closest DensArmor Plus manufacturing location. You may use the following Website to determine the distance to your job-site (not a GP Website): **http://www.indo.com/distance/**

Manufacturing Location	Extraction Location
Acme, TX	Acme, TX
Antioch, CA	San Marcos Island, Mexico
Brunswick, GA	Port Hawksbury, Nova Scotia
Caledonia, ON	Port Hawksbury, Nova Scotia
Camden, NJ	Port Hawksbury, Nova Scotia
Ft. Dodge, IA	Ft. Dodge, IA
Long Beach, CA	San Marcos Island, Mexico
Lovell, WY	Lovell, WY
Surrey, BC	San Marcos Island, Mexico
Tacoma, WA	San Marcos Island, Mexico/Centralia, WA

Plants are being added on an on-going basis. Please call the technical information line to determine if a closer plant has been brought on-line.

CU 78
CU 78

SECTION 4 Product Resists the Development and Spread of Indoor Contaminants

*(*LEED Innovation in Design Process Credit)*

CU 79

When tested as manufactured, product resists growth of mold pursuant to the test method ASTM D 3273 and may qualify for a LEED Innovation Credit based upon the environmental mitigation of mold and mildew related to Indoor Air Quality (IAQ). Additionally, in fire-rated assemblies, product is a Type X product according to ASTM E 119 and ASTM C 1177.

The "Construction IAQ Management Plan" (Credit 3) uses the "EPA Protocol for Environmental Requirements, Baseline IAQ and Materials for Research Triangle Park Campus, Section 01445" (www.epa.gov/rtp/new-bldg/environmental/s_01445.htm) as one of its reference standards and incorporates a measurement for airborne Mold & Mildew, which includes:

1. **"Compliance Indoor air quality shall conform to the following standards and limits…"**
2. **"Airborne Mold and Mildew: Simultaneous indoor and outdoor readings."**

This Specification section was a part of the construction documents for the EPA's Research & Administration Facility at Research Triangle Park. The section addresses baseline indoor air quality testing and materials testing.

One of the five areas covered to enhance IAQ performance is through "Source Control" of materials that could be a potential hindrance to passing the testing phase of the aforementioned IAQ LEED Reference Standard. Specifying products that score well on the ASTM D 3273 Mold Test may provide an effective method for enhancing IAQ.

DensArmor Plus® has received both **GREENGUARD®** and **GREENGUARD® Children & Schools℠ Certifications** for low emitting products.

**All LEED rating point references are suggested applications of Dens™ to the LEED rating system. LEED applicants should use their own objective determinations of product attributes for LEED certification purposes.*

Georgia-Pacific Gypsum

SALES INFORMATION AND ORDER PLACEMENT

U.S.A. Midwest: **1-800-876-4746** West: **1-800-824-7503**
South: **1-800-327-2344** Northeast: **1-800-947-4497**

CANADA Canada Toll Free: **1-800-387-6823**
Quebec Toll Free: **1-800-361-0486**

TECHNICAL INFORMATION

Georgia-Pacific Gypsum Technical Hotline
U.S.A. and Canada: **1-800-225-6119**
Mon.-Fri., 8 a.m.-5 p.m. ET
www.gpgypsum.com

The GREENGUARD INDOOR AIR QUALITY CERTIFIED mark is a registered certification mark used under license through the GREENGUARD Environmental Institute.

TRADEMARKS The GEORGIA-PACIFIC logo and all trademarks are owned by or licensed to Georgia-Pacific Gypsum LLC.

UPDATES AND CURRENT INFORMATION The information in this document may change without notice. Visit our Web site at www.gpgypsum.com for updates and current information.

LIMITATION OF REMEDIES AND DAMAGES Unless otherwise stated in our written limited warranty for this product, our sole liability for any product claim shall be limited to reimbursement of the cost of repair or replacement of the affected product, up to a maximum amount of two times the original purchase price for the affected product. We shall not be responsible under any circumstances for lost profits, damage to a structure or its contents, or indirect, incidental, special or consequential damages. Claims shall be deemed waived if they are not submitted to us in writing within ten days after discovery.

SAFETY CAUTION: This product contains fiberglass. Fibers and dust may be released from this product during normal handling and may result in skin, eye and respiratory irritation. Avoid breathing dust and contact with the skin and eyes.

Follow these standard work practices: Wear a loose-fitting, long-sleeved shirt and long pants, protective gloves and eye protection (goggles or safety glasses with side shields). Wear a dust mask when sanding. Additional protection may be needed when very dusty. Do not use a power saw. For Material Safety Data Sheet or additional information, call 1-800-225-6119 or visit our Web site.

Some of our products have been certified by Scientific Certification Systems (SCS). SCS is an internationally recognized third-party evaluation, testing and certification organization. Its program spans a wide cross-section of the economy, including manufacturing and retailing, consumer products, the energy industry, and the home improvement and construction sectors. For details on specific Georgia-Pacific Gypsum products and plants, please contact our Technical Hotline: 800-225-6119.

CU 79

CU 79

Smith & Fong Company
375 Oyster Point Blvd., #3
South San Francisco, CA 94080

Phone: (650) 872-1184
Toll Free: (866) 835-9859
Fax: (650) 872-1185

Website: www.plyboo.com/

E-mail: angus@plyboo.com

PLYBOO STRAND® BAMBOO STRIP FLOORING

PRODUCT SPECIFICATION

IN CSI 3-PART FORMAT

****

GENERAL NOTES TO SPECIFIER:

THIS SPECIFICATION SECTION HAS BEEN PREPARED TO ASSIST DESIGN PROFESSIONALS IN THE PREPARATION OF PROJECT OR OFFICE MASTER SPECIFICATIONS. IT FOLLOWS GUIDELINES ESTABLISHED BY THE CONSTRUCTION SPECIFICATIONS INSTITUTE, AND THEREFORE MAY BE USED WITH MOST MASTER SPECIFICATION SYSTEMS WITH MINOR EDITING.
.
SAMPLE LANGUAGE IS PROVIDED FOR APPLICABLE ARTICLES IN PART 1–GENERAL, PART 2–PRODUCTS AND PART 3–EXECUTION FOLLOWING THE CONSTRUCTION SPECIFICATION INSTITUTE'S *SECTIONFORMAT*. BECAUSE OF THE VARIATION IN SPECIFICATION SYSTEMS CURRENTLY IN USE, ARTICLE AND PARAGRAPH NUMBERS AND TITLES MAY DIFFER SOMEWHAT THAN PRESENTED HEREIN. THE SAMPLE LANGUAGE SHOULD BE EDITED ACCORDINGLY TO FIT EACH FIRM'S SPECIFICATIONS.

ARTICLES AND PARAGRAPHS OF THIS PRODUCT SPECIFICATION ASSUME THE PROJECT MANUAL WILL CONTAIN COMPLETE DIVISION 1 DOCUMENTS INCLUDING 01 25 13–PRODUCT SUBSTITUTION PROCEDURES, SECTIONS 01 33 00–SUBMITTAL PROCEDURES, 01 62 00–PRODUCT OPTIONS, 01 66 00–PRODUCT STORAGE AND HANDLING REQUIREMENTS, 01 74 00–CLEANING AND WASTE MANAGEMENT, 01 77 00–CLOSEOUT PROCEDURES, AND 01 78 00–CLOSEOUT SUBMITTALS. CLOSE COORDINATION WITH DIVISION 1 SECTIONS IS REQUIRED. IF THE PROJECT MANUAL DOES NOT CONTAIN THESE SECTIONS, ADDITIONAL INFORMATION MAY BE INCLUDED UNDER THE APPROPRIATE ARTICLES.

NOTES TO THE SPECIFIER ARE IN ALL UPPER CASE TEXT AND ARE CONTAINED WITHIN ROWS OF ASTERISKS.

GREY HIGHLIGHTED GREEN TEXT AND NOTES RELATE TO LEED® PROJECTS AND CAN BE DELETED IF THE PROJECT IS NOT INTENDED TO ATTAIN LEED CERTIFICATION.

OPTIONAL ITEMS REQUIRING SELECTION BY THE SPECIFIER ARE ENCLOSED WITHIN BRACKETS, E.G. [35] [40] [45]. MAKE APPROPRIATE SELECTIONS AND DELETE OTHERS.

OPTIONAL PARAGRAPHS AND FEATURES THAT MAY BE SELECTED OR DELETED AS DESIRED ARE SHOWN IN BOLD FACE TYPE. DELETE BOLD FACE TYPE WHEN INCLUDING THESE PARAGRAPHS OR FEATURES.

SECTION 09 62 23
Bamboo Flooring

PART 1 - GENERAL

1.01 SUMMARY

A. Plyboo Strand® bamboo strip flooring **and matching accessories** installed by the glue-down method.

****
Consult with manufacturer regarding any installation method other than glue-down.
****

B. RELATED SECTIONS

****
IN THE "RELATED SECTIONS" PARAGRAPH INCLUDE ALL DIVISION 01 SECTIONS CONTAINING LEED® REQUIREMENTS.

IF THE PROJECT IS A SCHOOL LOCATED IN A STATE OR DISTRICT USING "SECTION 01350 – SPECIAL ENVIRONMENTAL REQUIREMENTS" http://www.chps.net/manual/index.htm#specs PREPARED BY THE COLLABORATIVE FOR HIGH PERFORMANCE SCHOOLS (CHPS), INCLUDE IN THIS SECTION.

ADD TO, OR DELETE FROM LIST BELOW TO CREATE AN ACCURATE LIST OF ALL APPROPRIATE SECTIONS FOR MATERIAL INSTALLED IN CONTACT WITH THE BAMBOO STRIP FLOORING

ADD TO LIST BELOW SECTIONS FOR FINISHED TRIM NOT INCLUDED IN THIS SPECIFICATION
****

1. Section 03 30 00 - Cast-In-Place Concrete

2. Section 06 16 23 – Subflooring

3. Section 06 16 26 – Underlayment

4. Section 06 16 29 – Acoustical Underlayment

1.02 REFERENCED STANDARDS

A. ASTM - American Society for Testing and Materials International.

1. ASTM E 648: Standard Test Method for Critical Radiant Flux of Floor-Covering Systems Using a Radiant Heat Energy Source.

2. ASTM D 1037: Standard Test Methods for Evaluating Properties of Wood-Base Fiber and Particle Panel Materials.

3. ASTM D 3501: Standard Test Methods for Wood-Based Structural Panels in Compression

4. ASTM D 4442: Standard Test Methods for Direct Moisture Content Measurement of Wood and Wood-Base Materials

5. ASTM E 1333: Standard Test Method for Determining Formaldehyde Concentrations in Air Emission Rates from Wood Using a Large Chamber

B. NWFA- National Wood Flooring Association: Technical Reference Manual

C. US Green Building Council's Leadership in Energy and Environmental Design Green Building Rating System® (LEED).

1.03 SYSTEM PERFORMANCE

A. Compatibility with Radiant Floor Heating Systems: Compatible.

1.04 SUBMITTALS

A. Reference Section 01 33 00; Submit following items

1. Product Data
   a. Each product specified
   b. Installation adhesive

2. Quality Assurance/Control Submittals:

   a. NWFA Technical Reference Manual.
   b. Proof of bamboo flooring manufacturer's qualifications.
   c. Test Reports: Reports for specified Physical Property Performance Requirements.

3. Shop Drawings: Show installation details including location, layout, and transition of each type of flooring **and accessory**.

4. Samples:

   a. 6 inch (150 mm) long strip of flooring material
   b. One of each specified accessory, minimum 4 inches (100 mm)

5. LEED® Submittals:

****
FOR LEED PROJECTS INCLUDE THE FOLLOWING, AS APPLICABLE.
****

a. Credit MR 6, Rapidly Renewable Materials: Bamboo flooring manufacturer's product data for each product used, indicating that product(s) are manufactured from a rapidly renewable resource.
b. Credit EQ 4.1, Low-Emitting Materials, Adhesives and Sealants: Manufacturer's product data.
c. Credit EQ 4.2, Low-Emitting Materials, Paints and Coatings: Manufacturer's: product data for field finished floor coatings.
d. Credit EQ 4.4, No added urea fomaldehyde

1.05 QUALITY ASSURANCE

A. Qualifications

1. Manufacturer:

   a. Minimum 15 years experience in manufacturing and distributing bamboo flooring products.

   b. Member: National Wood Flooring Association, American Bamboo Society, Woodwork Institute, U.S. Green Building Council.

2. Installer: Minimum 3 years experience in hardwood flooring installation.

B. Reference Section 01 31 19.33; Pre-Installation Meeting:

1. **Convene meeting at project site within one week of scheduled start of installation with representatives of the following in attendance: Owner, Architect, General Contractor, Sub-Contractor.**
2. **Review substrate conditions, requirements of related work, requirements for operation of HVAC system, installation instructions, storage and handling procedures, and protection measures.**
3. **Keep minutes of meeting including responsibilities of various parties and deviations from specifications and installation instructions.**
4. **Distribute minutes to attendees within 48 hours**

1.06 DELIVERY, STORAGE, AND HANDLING

A. Deliver flooring materials in original unopened cartons.

B. Reference Section 01 66 00: Product Handling and Storage Requirements.
1. Store flooring onsite for a minimum of 72 hours.
2. Do not store directly on concrete or near outside walls.

1.07 PROJECT CONDITIONS

A. Room temperature and humidity of installation area should be consistent with normal range of 40 – 60% humidity, and temperature in the range of 60 – 70 degrees F, for a minimum of one week before installation. Room temperature of 60-70 degrees F and humidity range of 40-60 percent during installation is recommended for optimal performance.
B. Radiant Heat: Comply with Manufacturer Installation Instructions

1.08 WARRANTY

A. Special Warranty for Smith & Fong Flooring referenced at www.plyboo.com

PART 2 – PRODUCTS

2.01 MANUFACTURER

A. Smith & Fong Company, South San Francisco, CA
1. Tel: (866) 835-9859
2. www.plyboo.com

2.02 MATERIALS

A. Bamboo Strip Flooring

1. Species: Moso (Phyllostachys Pubescens)
2. Edge Configuration: Tongue and groove, 4 sides
3. Type: [Prefinished: 3-3/4 inches wide by 5/8 inch thick by 36 inches length] [Prefinished: 3-3/4 inches wide by 3/8 inch thick by 36 inches length] [Unfinished: 3-3/4 inches wide by 5/8 inch thick by 36 inches length]
    a. [Honey] [Dark]

4. Physical Mechanical Properties
    a. ASTM E 648: Critical Radiant Flux, Class 1
    b. ASTM D 1037:
        1. Dimensional Stability at 20 percent RH:
            i. Linear Expansion, Parallel –0.02, Perpendicular –0.23
            ii. Thickness Swell -0.25
        2. Hardness (Janka Ball Test) 2899 lbf
    c. ASTM D 4442: Moisture Content 4.2
    d. ASTM D 3501: Compressive Strength 9,431 pounds, maximum load 13,066 lbf
    e. ASTM E 1333: Formaldehyde: 0.02 ppm
    f. No added urea formaldehyde

5.Installation Adhesive:

1. Bostik's Best is recommended for Smith & Fong Plyboo Strand® Bamboo Flooring Products.

2.03 ACCESSORIES

A. Stair Steps: Prefinished; 12 inches wide by 1 inch thick by 48 inches length
1. [Honey] [Dark]

A. Baseboard: Prefinished with beveled edge; 3 inches wide by 5/8 inch thick by 72 inches length
1. [Honey] [Dark]

B. Stair nosing: Prefinished; [3-1/4 inches wide by 3/8 inch thick by 72 inches length] [3-1/4 inches wide by 5/8 inch thick by 72 inches length]
a. [Honey] [Dark]

C. Threshold: [Prefinished Overlap 2-1/8 inches wide by 3/8 inch thick by 72 inches length][Prefinished Standard 3-5/8 inches wide 5/8 inch thick by 72 inches length]
a. [Honey] [Dark]

D. T Molding: Prefinished; [2 inches wide by 3/8 inch thick by 72 inches length] [3-1/4 inches wide by 5/8 inch thick by 72 inches length]
a. [Honey] [Dark]

E. Reducer: Prefinished; 1-3/4 inches wide by 3/8 inch thick by 72 inches length
a. [Honey] [Dark]

F. Base Shoe: Prefinished; ¾ inch wide by ½ inch thick by 72 inches length
a. [Honey] [Dark]

PART 3 - EXECUTION

3.01 EXAMINATION

A. Examine substrates for compliance with requirements for installation tolerances, and other conditions affecting performance of flooring.

B. Verify substrate is clean and free of loose material, grease and other contaminates which may interfere with bonding of adhesive.

****

Specifier Note: Delete paragraph below and two subparagraphs if substrate is other than concrete.

****

C. Substrate Moisture Testing: Use Calcium Chloride Test or Tramex Moisture Encounter Meter. Do not install bamboo flooring if vapor pressure exceeds 3 lbs per 1,000 sf (15 g per m^2) in 24 hours.

1. In multiple story buildings, test each floor level scheduled to receive bamboo flooring
2. Mark test location(s) on As-Built Drawings.

****

Specifier Note: Delete paragraph below if substrate is other than wood.

D. Do not install bamboo flooring if wood substrate exceeds 12% moisture.

E. Verify HVAC System is operating and maintaining temperature and humidity conditions in compliance with Manufacturer's Installation Instructions.

F. Coordinate with responsible entity to correct unsatisfactory conditions.

G. Commencement of work by installer is acceptance of substrate conditions.

3.02 PREPARATION

A. Acclimatization: Open flooring boxes and remove packing minimum 3 days prior to start of installation.

B. Grind and fill subfloor using methods and materials appropriate to the subfloor construction to eliminate humps and depressions exceeding 3/16 inch (5 mm) in 10 feet (3048 mm).

3.03 INSTALLATION

A. Flooring: Comply with Manufacturer's Installation Instructions.

B. Adhesive: Comply with manufacturer's written instructions.

3.04 CLEANING: Reference Section 01 74 00: Cleaning and Waste Management

A. Repair or replace damaged installed products.

B. Clean installed products in accordance with manufacturer's instructions prior to Owner's acceptance.

3.05 PROTECTION

A. Do not allow foot traffic or heavy furniture on floor for 24 hours or as adhesive manufacturer requires.

B. Protect installed product from damage during construction by covering with heavy kraft-paper or other suitable covering. Do not use non-breathable sheet or film that could cause condensation to form. Maintain covering throughout remainder of construction period.

END OF PRODUCT SPECIFICATION


it **clicks** between us
forbo
marmoleum®
click
Fun to design. Easy to install.

marmoleum® *click*

Fun to design. Easy to install.

753880

WE KNEW IMMEDIATELY
Esther and Karl love their new kitchen: "Marmoleum click provided the finishing touch," says Esther. "We'd been looking for ages for a floor that would bring it all together. Then we saw this, and we knew immediately that we'd found it."

feel free with Marmoleum **click**

Marmoleum click is a high quality, easy to install flooring system made from natural materials. Available in a wide choice of colours, it is ideal for kitchens, living rooms, hallways, bedrooms, playrooms and studies*. Marmoleum click comes in 90 cm x 30 cm panels and 30 cm x 30 cm squares and features a patented click system, which guarantees easy, problem-free installation. With Marmoleum click, it really is easy to turn your wildest dreams into a beautiful reality.

*Marmoleum click is not recommended for rooms that regularly get very wet, such as bathrooms and saunas.

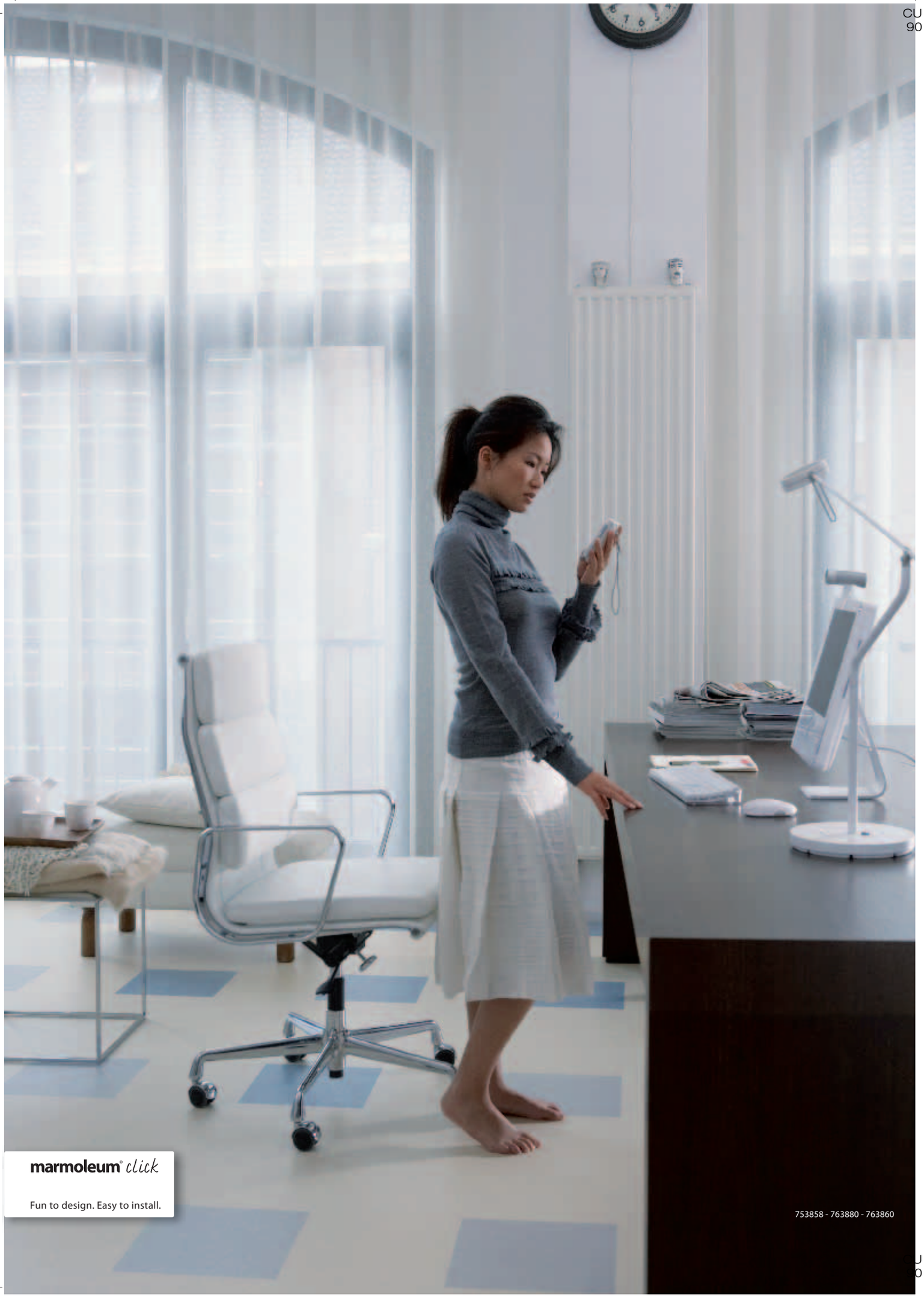
marmoleum® click
Fun to design. Easy to install.
753858 - 763880 - 763860

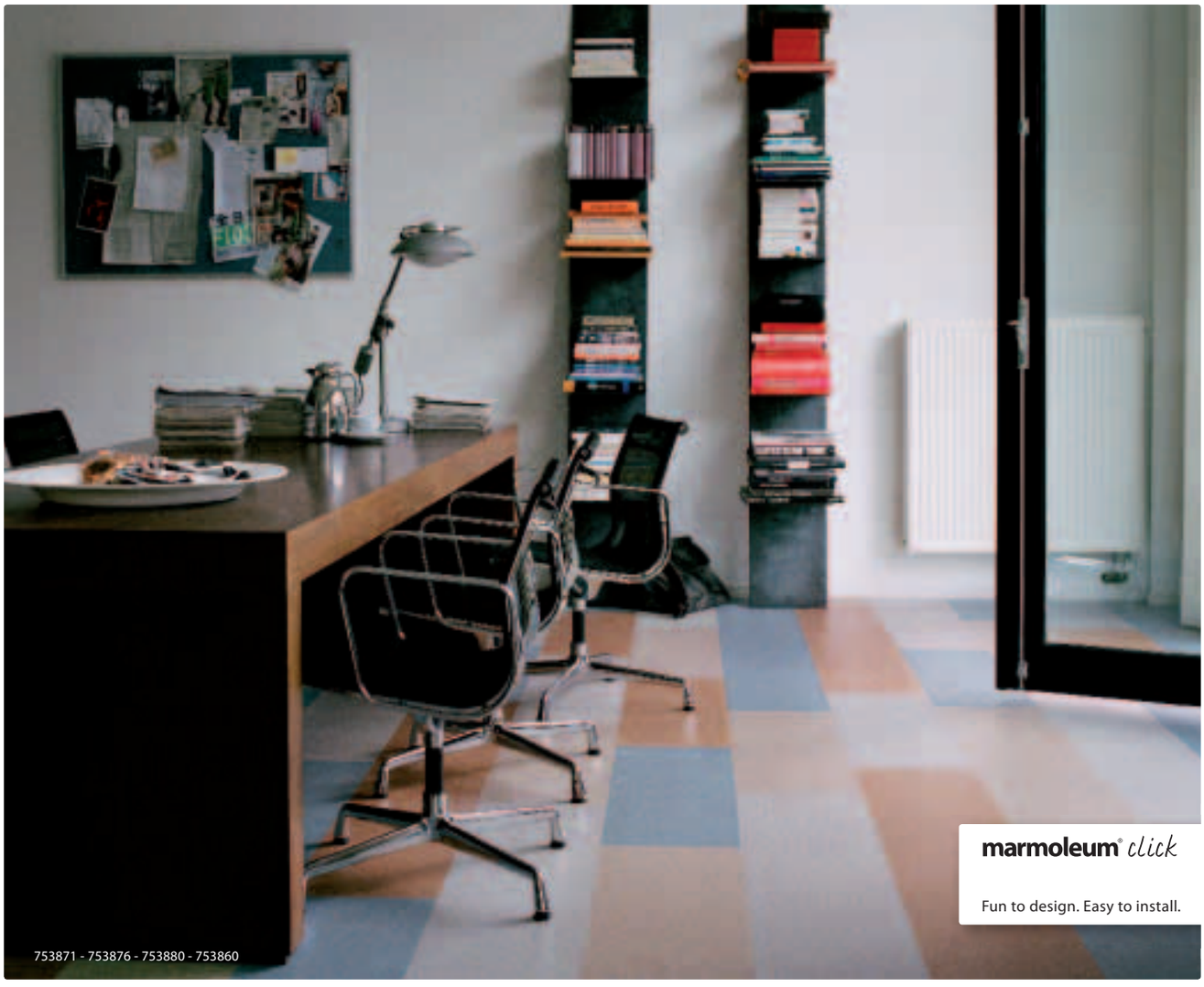

express yourself with Marmoleum **click**

Marmoleum click is all about letting you express yourself and making your home unique.
Just decide what kind of interior feels right to you. Contemporary, traditional, minimalist, cosy? How about relaxing, spacious, vibrant or bright? With Marmoleum click you can design a tailor-made floor for every room. One that makes your furniture and decorations shine and allows you to really express who you are.

IT HAD TO FEEL RIGHT
"This floor feels just right," says Esther of her new working space. "I wanted an environment that would encourage me to get things done, but which was also mine – not too much like an office! It had to feel right, and this does."

marmoleum® *click*

Fun to design. Easy to install.

753209 - 753872

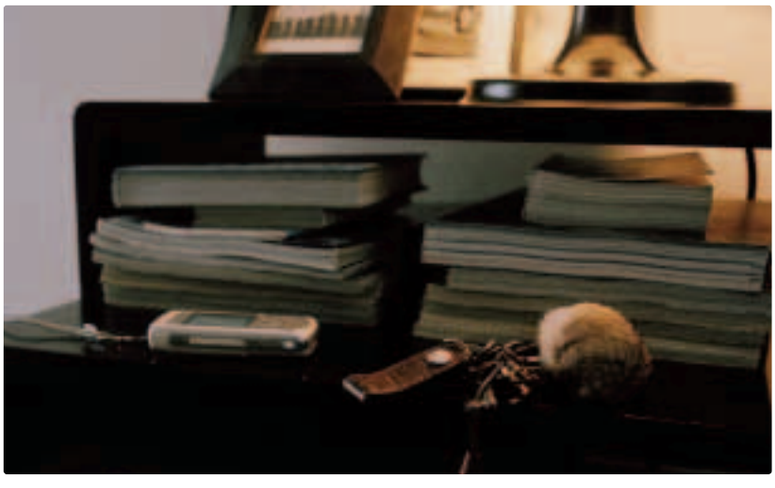

marmoleum® *click*

Fun to design. Easy to install.


marmoleum® click
Fun to design. Easy to install.
753860 - 753858 - 753877

MARMOLEUM CLICK JUST CLICKED
When it came to redecorating the kitchen, Sandra and Simon found that "Marmoleum click just clicked," laughs Sandra. "I love the look and feel, plus it's so easy to clean and the natural material inhibits bacteria. That's very reassuring when you have a young family."

same room, endless effects

Marmoleum click lets you create endless effects. Quiet shades for a neutral background. Cheerful colours to brighten up your home. Fresh colours that soothe. Light ones to make a room look bigger. Warm colours to make difficult spaces cosy.
And you can get even more creative by mixing and matching. Decide on the atmosphere and colours and unleash your creativity. Then make a sketch based on the actual size of your room (and don't forget to take the width of the panels into account) and create you're unique design. That's all there is to it.


CU
96
marmoleum® click
Fun to design. Easy to install.
753874 - 753876 - 753870 - 753871
CU
96

the only rule is no rules

There are no rules when it comes to designing your Marmoleum click floor, but to help you make the most of all the possibilities, here are a few tips.
Consider the size and shape of your room. A dark colour or busy pattern may make a small or long, narrow room look even smaller. Stripes or diagonal patterns can create optical effects that completely transform a space. Another point is what the room is used for.

Living rooms and bedrooms often suit darker, warmer colours, while light, crisp colours may work better in a kitchen.
And then there's furniture: the more you have in a room, the less of the floor you can see, in which case it may be best to keep the design simple. On the other hand, you can achieve amazing effects with a bright, punchy pattern!

I COULDN'T RESIST
"I found Max in a stray dogs' home – and I couldn't resist," says Sandra. "I saw him sitting there and then he sat up with his head to one side and I just knew I couldn't leave him there. Luckily, with this floor it's easy to wipe away his muddy paw prints!"

marmoleum® *click*

Fun to design. Easy to install.

763879 - 763876 - 763202

SHE LOVES THE COLOURS

"Joanna loves being in our room now", says Sandra. "You can't keep her out since we put this floor down. She says she likes the colours and that it feels nice. There's certainly no doubt about what her favourite colour of nail varnish is!"

CU
98


753879 - 753202
marmoleum® click
Fun to design. Easy to install.

marmoleum® *click*

Fun to design. Easy to install.

763866 - 763872 - 763878 - 763860

NO COMPETITION, REALLY
"Daniel chose this floor," says Simon, "though we did insist on Marmoleum click. Why? We wanted something tough but which felt comfortable, and was easy to keep clean. Plus, there are plenty of colours to choose from, so it was no competition, really."

a floor that's practical and durable

Marmoleum click is extremely durable and extremely simple to care for. The smooth surface is easy to clean – a dry-cloth sweeper for dust and a neutral cleaner and damp cloth for any spots – while thanks to the way it is made, it can't fade.
Marmoleum click also improves life for people with asthmatic allergies and similar disorders. Not only it is anti-static (which is why it's so easy to keep dust-free), but its lab-proven bacteriostatic properties inhibit micro-organisms as well.
And because Marmoleum is a natural product, it reaches room temperature quickly, ensuring your house is snug and warm. It can even be used with under-floor heating.

marmoleum® *click*

Fun to design. Easy to install.

making the **click** is so easy

Marmoleum click is a snap to install. Slot it together with the simple locking system and literally click the panels into place. Because Marmoleum click panels are wide and leave no seams when connected, it's easy to get a nice smooth finish in no time. And there's no need to mess around with glue or waiting for it dry. Lay it, walk on it. Of course, your Marmoleum click retailer can also fit your floor, if you prefer.

Marmoleum click can be installed over every type of surface. The only time extra preparation is needed is if the floor or underlay is very uneven (differences of 2 mm or more).

We also offer a range of matching skirting finishes to give your room that extra touch.

CU
102

everything you need

Simple to fit

Marmoleum click is available as panels measuring 90 cm x 30 cm. The panels are approximately 9.8 mm thick and are supplied in boxes of 7 – about 1,89 square metres.

Marmoleum click is also available in 30 x 30 cm squares, which enables you to create different effects. Like the panels, each square is approximately 9.8 mm thick and they come in boxes of 7– about 0.63 square metres. You can choose, one, the other, or a combination.

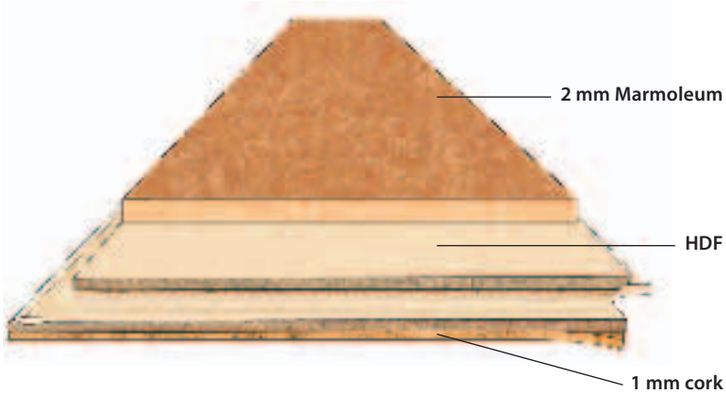

The finishing touch

We also supply a choice of skirting finishes to complete the look of your room. For more information please contact your local Marmoleum click dealer.

Installation aids

To make fitting you floor truly easy, we can also provide the following installation aids:

- Wedge
- Tapping block

Where to buy Marmoleum click

Marmoleum click is available from leading interior furnishing shops and selected parquet flooring suppliers. They can give you expert advice, a detailed price quotation and information on installing your floor. For the address of your nearest supplier, visit our web site at www.XXXXXXXXXXXX or call XXXXXXXXXX.

All the latest Marmoleum collections, including Marmoleum click, can also be viewed online. Go to www.forbo-flooring.XX to view colour samples, ideas on combinations and more, including seeing how your room would look with your very own Marmoleum click floor design!

Long-lasting care

Marmoleum click has a strong protective finish that makes cleaning and maintenance very simple indeed. Wiping away dust with a dry sweeper is a fast and easy way to remove loose dirt. To protect your floor, simply apply Forbo Monel. Monel absorbs wet dirt, and will be removed next time you clean. Regular use of Monel will ensure your floor retains its as-new appearance.

Free sample service

Would you like to receive a free colour sample? Please call XXXXXXXXXXX or order one by visiting our web site at www.XXXXXXXXXXXXXXX.

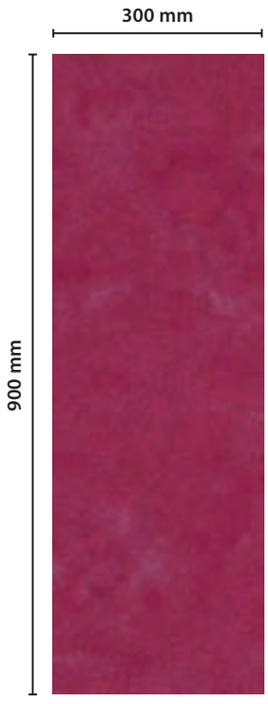

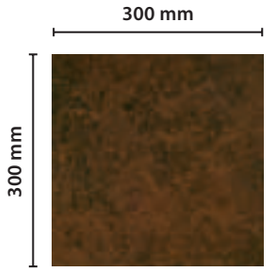

colours

van gogh	753173	763173	sahara	753174	763174	red copper	753870	763870
natural corn	753846	763846	henna	753203	763203	wine barrel	753202	763202
caribbean	753038	763038	raspberry	753879	763879	bleeckerstreet	753127	763127
barbados	753858	763858	pineapple	753877	763877	lime	753878	763878
silver shadow	753860	763860	sky blue	753880	763880	lapis lazuli	753205	763205
silver birch	753871	763871	camel	753876	763876	walnut	753874	763874
eternity	753866	763866	volcanic ash	753872	763872	raven	753209	763209

CU
104

make the **click** with nature

Marmoleum click's colours are inspired by nature, but its beauty is more than skin deep. The top layer is linoleum, a natural, ecologically produced material made from linseed oil, rosin, limestone and environmentally friendly pigments. Behind this is a layer of water-repellent HDF (High Density Fibreboard), which is backed by a layer of cork.
Because of the way it's made, don't be surprised if your Marmoleum click has a yellowish film on it when it's delivered. This is oxidised linseed oil, which colours the surface when it's dried. The film will disappear (usually within 24 hours) as soon as your floor is exposed to the light. Also, because linoleum is a natural product, there may be very slight colour and structural differences between production batches, samples and the delivered goods.

Forbo Flooring
P.O. Box 13
1560 AA Krommenie
The Netherlands
Tel. +31 75 647 74 77
Fax +31 75 647 77 01
contact@forbo.com
www.forbo-flooring.com

Forbo Flooring, part of the Swiss Forbo Group, offers a full range of flooring products for both commercial and residential markets. High quality linoleum, vinyl and hardwood floors combine functionality, colour and design – giving you total flooring solutions for any environment.

creating better environments

CU
106

creating better environments

Technical specifications

Corklinoleum®

Corklinoleum meets the requirements of EN 688

	Thickness	4.5 mm
Classification	EN 685	
	Class	22
	Class	31
Collection size		12
Roll width	EN 426	2.00 m
Roll length	EN 426	32 m
Static charge	EN 1815	‹ 2 kV
Fire rating	EN 13501-1	D_{fl}, s1
Impact sound reduction	EN ISO 717-2	14 dB
Thermal conductivity	EN 12524	0.10 W/m·K
Residual indentation	EN 433	± 0.35 mm
Colour fastness	ISO 105-B02	Method 3: blue scale minimum 6.
Chemical resistance	EN 423	Resistant to diluted acids, oils, fats and to the conventional solvents such as alcohol, white spirit, etc. Not resistant to prolonged exposure to alkalis.
Flexibility	EN 435	ø 40 mm
Bacteriostatic properties		Marmoleum has bacteriostatic properties, which are confirmed by independent laboratories, even against the bacteria MRSA.
Life Cycle Assesment		LCA is the foundation for securing the lowest environmental impact.

The above information is subject to modifications for the benefit of further improvements (version: 8/04).

creating better environments

Technical specifications

MARMOLEUM® global 2

Marmoleum meets the requirements of EN 548

	Thickness	2.0 mm	2.5 mm	3.2 mm	4.0 mm
Classification	EN 685				
	Class	23	23	23	23
	Class	32	34	34	34
	Class	41	42	42	43
Collection size		52	116	12	3
Roll width	EN 426	2.00 m	2.00 m	2.00 m	2.00 m
Roll length	EN 426	32 m	32 m	32 m	32 m
Static charge	EN 1815	‹ 2 kV	‹ 2 kV	‹ 2 kV	‹ 2 kV
Slip resistance	DIN 51130	R9	R9	R9	R9
	EN 13893	DS: ≥ 0.30	DS: ≥ 0.30	DS: ≥ 0.30	DS: ≥ 0.30
Fire rating	EN 13501-1	C_{fl}, s1	C_{fl}, s1	C_{fl}, s1	C_{fl}, s1
Impact sound reduction	EN ISO 717-2	≤ 4 dB	≤ 5 dB	≤ 6 dB	≤ 7 dB
Castor chair resistance	EN 425	Suitable for office chairs with castors.			
Residual indentation	EN 433	0.07 mm	0.08 mm	0.10 mm	0.13 mm
Colour fastness	ISO 105-B02	Method 3: blue scale minimum 6. Depending on the colour, the colour fastness is usually higher, often being 8 (blue scale maximum is 8).			
Thermal conductivity	EN 12524	0.17 W/m·K	0.17 W/m·K	0.17 W/m·K	0.17 W/m·K
Chemical resistance	EN 423	Resistant to diluted acids, oils, fats and to the conventional solvents such as alcohol, white spirit, etc. Not resistant to prolonged exposure to alkalis.			
Bacteriostatic properties		Marmoleum has bacteriostatic properties, which are confirmed by independent laboratories, even against the bacteria MRSA.			
Flexibility	EN 435	ø 30 mm	ø 40 mm	ø 50 mm	ø 60 mm
Cigarette resistance	EN 1399	Marks left on linoleum as a result of stubbed-out cigarettes can be easily removed. Sandpaper gently and apply a new coat of polish. Linoleum does not melt.			
Life Cycle Assesment		LCA is the foundation for securing the lowest environmental impact.			

Additional specifications Marmoleum Dual tiles

Tile size(s)		33.3 x 33.3 cm	50 x 50 cm
Squareness	EN 427	≤ 0.25 mm	≤ 0.35 mm

The above information is subject to modifications for the benefit of further improvements (version: 8/04).

Richlite Company
624 E. 15th Street
Tacoma, WA 98421
info@richlite.com

Properties of Richlite, Natural Fiber Composite

Electrical Properties
Dielectric Strength (Volts/mil)……..…...150
Dielectric Constant……..….9.24
Disipation Facto…….….…0.29
Thermal Properties
Coeff. Of Thermal Expansion In X Dir (min/in.∞F)…….….5.2
Coeff of Thermal Expansion In Y Dir (min/in.∞F)……..12.8
Coeff of Thermal Expansion In Z Dir (min/in.∞F)……..45.9/73.5”
Thermal Conductivity (Cal cm/cm2 sec ∞C)……0.00051
Tensile Strength
X Direction(psi)……..19,200
Y Direction (psi)……13,100
Compressive Strength
X Direction (psi)……18,400
Strain @ Failure……...7.09%
Y Direction (psi)……15,900
Strain @ Failure……..7.15%
Z Direction (psi)……30,000
Strain @ Failure……...ª20%
Flexural Strength (Face In Tension)
X Direction (psi)……22,000
Y Direction (psi)……17,300
Flexural Strength (Edge In Tension)
X Direction (psi)……20,400
Y Direction (psi)……16,100
Izod Impact (Face Impact)
X Direction (ft. lb. Per Inch of width)……2.48
Y Direction (ft. lb. Per Inch of width)……1.46
Izod Impact (Edge Impact)
X Direction (ft. lb. Per Inch of width)……0.68
Y Direction (ft. lb. Per Inch of width)……0.62
Abrasion Resistance – Taber Abraser (CS-17) (1/4x”x4”x4”)
Weight Loss per 1000 revs……..0.0112%
Wear per 1000 revs (Inches)……0.00011
Coefficient of Friction (Unpolished)……...0.2
Burning Rate……....Very Slow
Aging……Improves Mechanical and Electrical Properties
Sunlight……..Darkens Surface
Clarity……..Opaque
Weak Acids……None to slight depending on Acid
Strong Acids……..None to slight for reducing and organic
Decomposed by oxidizing acids
Weak Alkali……Slight to marked depending on alkalinity
Strong Alkali……Decomposes
Organic Solvents……None
Metal Inserts……Inert

“The two values for C.O.L.T.E. represent coefficients below and above glass transition temperature (130∞F) respectively.

Report No. 16247 - 106884
Rainer Richlite Co.

ABSTRACT

Test Material:	**R 1000 Natural 1 1/4" Thick**
Test Standard:	**ASTM E84-98 Standard Test Method for SURFACE BURNING CHARACTERISTICS OF BUILDING MATERIALS (ANSI 2.5, NFPA 255, UBC 8-1, UL 723)**
Test Date:	**May 31, 2000**
Test Sponsor:	**Rainer Richlite Co.**
Test Results:	**FLAME SPREAD INDEX = 30** **SMOKE DEVELOPED INDEX = 30**

The description of the test procedure and specimen evaluated, as well as the observations and results obtained, contained herein are true and accurate within the limits of sound engineering practice. These results are valid only for the specimen(s) tested and may not represent the performance of other specimens from the same or other production lots.

Omega Point Laboratories, Inc. authorizes the client named herein to reproduce this report only if reproduced in its entirety.
The test specimen identification is as provided by the client and Omega Point Laboratories accepts no responsibility for any inaccuracies therein.

Date: June 1, 2000

Guy A. Haby
Fire Testing Technologist

Date: June 1, 2000

William E. Fitch, P.E. No. 55296
Executive Vice President

I. INTRODUCTION

This report describes the results of the ASTM E84-98 Standard Test Method for SURFACE BURNING CHARACTERISTICS OF BUILDING MATERIALS (1) , a method for determining the comparative surface burning behavior of building materials. This test is applicable to exposed surfaces, such as ceilings or walls, provided that the material or assembly of materials, by its own structural quality or the manner in which it is tested and intended for use, is capable of supporting itself in position or being supported during the test period.

The purpose of the method is to determine the relative burning behavior of the material by observing the flame spread along the specimen. Flame spread and smoke density developed are reported, however, there is not necessarily a relationship between these two measurements.

"The use of supporting materials on the underside of the test specimen may lower the flame spread index from that which might be obtained if the specimen could be tested without such support... This method may not be appropriate for obtaining comparative surface burning behavior of some cellular plastic materials... Testing of materials that melt, drip, or delaminate to such a degree that the continuity of the flame front is destroyed, results in low flame spread indices that do not relate directly to indices obtained by testing materials that remain in place."

This test method is also published under the following designations:

ANSI 2.5
NFPA 255
UBC 8-1 (42-1)
UL 723

This standard should be used to measure and describe the properties of materials, products, or assemblies in response to heat and flame under controlled laboratory conditions and should not be used to describe or appraise the fire hazard or fire risk of materials, products, or assemblies under actual fire conditions. However, results of this test may be used as elements of a fire risk assessment which takes into account all of the factors which are pertinent to an assessment of the fire hazard of a particular end use.

---

(1) American Society for Testing and Materials (ASTM), Committee E-5 on Fire Standards

II. PURPOSE

The ASTM E84-98 (25 foot tunnel) test method is intended to compare the surface flame spread and smoke developed measurements to those obtained from tests of mineral fiber cement board and select grade red oak flooring. The test specimen surface (18 inches wide and 24 feet long) is exposed to a flaming fire exposure during the 10 minute test duration, while flame spread over its surface and density of the resulting smoke are measured and recorded. Test results are presented as the computed comparisons to the standard calibration materials.

The furnace is considered under calibration when a 10 minute test of red oak decking will pass flame out the end of the tunnel in five minutes, 30 seconds, plus or minus 15 seconds. Mineral fiber cement board forms the zero point for both flame spread and smoke developed indexes, while the red oak flooring smoke developed index is set as 100.

III. DESCRIPTION OF TEST SPECIMENS

Specimen Identification: R 1000 Natural 1 1/4" Thick

Date Received:	5/24/2000
Date Prepared:	May 24, 2000
Conditioning (73°F & 50% R.H.):	7 days
Specimen Width (in):	24
Specimen Length (ft):	24
Specimen Thickness:	1.25-in.
Material Weight:	N/A oz./sq. yd.
Total Specimen Weight:	375.8-lbs.
Adhesive or coating application rate:	N/A

Mounting Method:

The specimen was self-supporting and was placed directly on the inner ledges of the tunnel.

Specimen Description:

The specimen was described by the client as "R 1000 Natural 1 1/4" Thick, Fiber Laminate". The specimen consisted of (2) 24" wide x 12' long x 1 1/4" thick "Fiber Laminate" panels.

CU
113

Underwriters Laboratories Inc.

BOLT.R13554
Hardboard

Page Bottom

Questions?

Previous Page

Hardboard

Guide Information

RICHLITE CO
624 E 15TH ST
TACOMA, WA 98421 USA

R13554

Uncoated hardboard paneling.

Flame spread	25
Smoke developed	40

Page Top

Notice of Disclaimer

Questions?

Previous Page

UL Listed and Classified Products

UL Recognized Components

Products Certified for Canada

CU
113

3form® *eco*resin

Do not:

- Concentrate spray in single position
- Use more than 1,500 psi pressure
- Position pressure nozzle closer than 8" (203 mm) from panel
- Proceed with pressure washing if test piece shows detrimental effects to panel
- Pressure wash *eco*resin panels that have been painted or coated to maintain coating integrity
- Pressure wash *eco*resin panels with sealed edges to ensure edge seals remain in tact

If debris or dirt is not removed by pressure washing attempt to clean with manual procedures described in preceding section.

Important: If a cleaning material is found to be incompatible in a short-term test, it will usually be found to be incompatible in the field. The converse, however, is not always true. Favorable performance is no guarantee that actual end-use conditions have been duplicated. Therefore, these results should be used as a guide only and it is recommended that the user test the products under actual end-use conditions.

For additional information about 3form *eco*resin please contact 3form @ 801.649.2500

IV. TEST RESULTS

The test results, computed on the basis of observed flame front advance and electronic smoke density measurements are presented in the following table. In recognition of possible variations and limitations of the test method, the results are computed to the nearest number divisible by five, as outlined in the test method.

While no longer a part of this standard test method, the Fuel Contributed Value has been computed, and may be found on the computer printout sheet in the Appendix.

Test Specimen	Flame Spread Index	Smoke Developed Index
Mineral Fiber Cement Board	0	0
Red Oak Flooring	n/a	100
R 1000 Natural 1 1/4" Thick	**30**	**30**

The data sheets are included in the Appendix. These sheets are actual print-outs of the computerized data system which monitors the ASTM E84 apparatus, and contain all calibration and specimen data needed to calculate the test results.

V. OBSERVATIONS

During the test, the specimen was observed to behave in the following manner: The specimen began to blister at 0:35 (min:sec). The blistered surface of the specimen began to flake off at 0:49. Steady ignition began at 1:29. Smoldering flakes of the specimen began to fall to the tunnel floor at 2:59. The test continued for the 10:00 duration. Upon completion of the test, the methane test burners were turned off and an afterflame continued to burn for 0:60+.

After the test, the specimen was observed to be damaged in the following manner: The surface of the specimen was charred and flaky from 0-ft. - 20-ft. The specimen had a light discoloration from 20-ft. - 24-ft.

NSF/ANSI Standard 51 - Food Equipment Materials

Authorized Registered Formulation

Customer Name: RAINIER RICHLITE COMPANY
Customer Number: 39420

Facility Location: TACOMA, WA
Facility At: TACOMA, WA
Facility Number: 39420

Product Trade Name
Richlite Series 3000

Material Formulator: Rainier Richlite Company
Material Type: Other (OTHER)
Material Trade Name: Richlite Series 3000
Color: Black
Food Contact Zone: Food Zone (Food Contact)
Restrictions: For use only as cutting boards, steam table boards, and baker top applications.

Food Contact Type	Temperature
All food contact types	350 F

3form® chroma

3form® chroma offers unique aesthetics and performance for horizontal and lighting applications. The product clarity offers designers the ability to create beautiful edge-lit pieces. Available in thick gauge formats, 3form *chroma* utilizes advanced coloring technology to take color to new “sights.”

For more information, please visit **3-form.com** or call **800.726.0126**

3form® chroma

Product Description

3form *chroma* offers unique aesthetics and performance for horizontal and lighting applications. The product clarity offers designers the ability to create beautiful edge-lit pieces. Available in thick-gauge formats, 3form *chroma* is colored with 3form color infusion and 3form applied coating technologies to take color to new "sights".

3form *chroma* is produced from cast polymethyl methacrylate (PMMA) resin that offers excellent optical clarity. The material is available in thick-gauge formats that results in rigid panels suitable for many horizontal applications. The moderate flammability of the material limits its interior use to lighting-specific and horizontal surface applications.

FEATURES AND BENEFITS

Maximum optical edge quality and light transmission—great for edge lighting
Excellent rigidity for providing sturdiness in horizontal applications
Surface is able to be completely refinished to maintain product "newness"
Qualifies for 3form Reclaim - keeping end-of-life material out of landfills

AVAILABLE COLORS*

REFINED	BOLD
Concord	Colbalt
Atlantic	Midnight
Moss	Violet
Blush	Marigold
Eggplant	Sea
Valley Mist	Grass
Olive	Boysenberry
Rosé	Cranberry
Mole Negro	Rasberry
Camel	Pool
Smoke Grey	Vitamin C
Mineral	Mai Tai
Titanium*	
Ghost*	
Ivory*	

*Colors only available with 3form applied coatings.

All colors available with 3form applied coating technology. Color infusion limited to 1/2" and 1" gauges only. Custom colors available. Contact your 3form representative for custom color submissions guidelines.

TEXTURES

Renewable matte - one side
Renewable matte - both sides (used with clear chroma)

3form® chroma

CHROMA COLORING: COLOR INFUSION VS. APPLIED COLOR COATINGS

3form Chroma is a highly functional material that brings impact when color is introduced. To achieve very unique color and aesthetics, 3form incorporates two different coloring technologies: infusion and applied coatings.

3form color infusion is an advanced technology that impregnates the polymer matrix with water soluble colorants. The result is a deep (~250 microns), consistent color that handles wear and tear and maintains remarkable color uniformity. The only limitation of the Chroma color infusion technology is that its use is limited to interior applications.

3form applied coating technology is an alternate method used to achieve brilliant colors on 3form Chroma. The 3form applied coating technology was developed for exterior chroma applications. An important development forethought was made to conscientiously invoke a coating technology that is low in volatile organic compound (VOC) content to have minimal environmental impact. Further, the pigments used are non-toxic and contain no heavy metals. The applied coating technology rests on the surface of the material and must be handled carefully a when exposed in high contact surfaces such as transaction counters.

PANEL SIZES AND TOLERANCES

All dimensions and squareness (standard or custom) are subject to a +/- 1/8" (3mm) tolerance.

Gauge tolerances are an inherent part of working with resin. Given the unique casting process for 3form *chroma* a given gauge is subject to a +/- 10% thickness tolerance. If your application requires a tighter gauge tolerance, please notify your 3form Representative.

PANEL SIZE TABLE*	
NOMINAL GAUGE	**SIZE(S)****
1/4" (6mm) applied only	4' x 8' (1.2m x 2.4m)
3/8" (9mm) applied only	4' x 8' (1.2m x 2.4m)
1/2" (12mm)	4' x 8' (1.2m x 2.4m), 4' x 10' (1.2m x 3m)
1" (25mm)	2' x 8' (.6m x 2.4m)*, 4' x 8' (1.2m x 2.4m), 4' x 10' (1.2m x 3m)
2" (50mm) applied only	2' x 8' (.6m x 2.4m)*, 4' x 8' (1.2m x 2.4m)

* 2' wide format available with applied coating technology only.

**2' wide format is additionally subject to a +0 / -1/4" (6mm) cut tolerance on 2' width (.6m).

Specifications

FLAMMABILITY & SMOKE TEST RESULTS – BUILDING CODE APPROVALS

3form *chroma* conforms to the 2003 *International Building Code* for light-transmitting plastics. The provisions of these codes provide adequate regulation for most applications of light-transmitting plastics [data based on 0.236" (6mm) thickness]:

3form® chroma

TEST 3FORM CHROMA RESULT	3FORM CHROMA	RESULT
ASTM D 2843 Smoke Density	4.1%	PASS Less than 75
ASTM D 635 Flame Spread	Rate of burning: 1.2 in/min	PASS CC2
ASTM D 1929 Self-ignition Temperature	852°F	PASS Greater than 850°F

PANEL WEIGHT AT VARIOUS GAUGES

THICKNESS	WEIGHT FLUX
1/4" (6mm)	1.6 lb/ft^2 (7.8 kg/m^2)
3/8" (9mm)	2.3 lb/ft^2 (11.2 kg/m^2)
1/2" (12mm)	3.1 lb/ft^2 (15.1 kg/m^2)
1" (25mm)	6.2 lb/ft^2 (30.2 kg/m^2)
2" (50mm)	12.4 lb/ft^2 (60.5 kg/m^2)

EXPANSION/CONTRACTION ALLOWANCES

Like all resin products, 3form *chroma* will expand and contract nominally with fluctuations in temperature. The following formula provides allowances that should be made in framed or fitted applications:

Longest length of panel (inches) x temperature change of the sheet (°F) x 0.00004 =
Amount of Linear Expansion/Contraction (inches)

EXAMPLE:

A 48" x 96" panel that experiences a 50°F temperature change will expand/contract:

96 inches x 50 degrees x 0.00004 = 0.192 inches

Installers should take extra precautions if installation is occurring before the HVAC systems are operational. Allowances should also be made in the following situations:

Fastening points
Holes for standoffs and other hardware
Meeting points for multiple sheets of 3form *chroma*

EXTERIOR EXPOSURE PERFORMANCE

Though 3form *chroma* was designed for use in interior applications, it is an excellent choice for exterior applications when incorporated with 3form applied color coating technology. All chroma colors produced with our applied coloring technology are UV stable. Should your application be for exterior use, please notify your 3form sales representative.

DEFLECTION

3form *chroma* will exhibit different amounts of deflection given a variety of factors: fastening techniques, loads, gauges and panel dimensions to list a few. Your 3form representative can assist you with general

3form® chroma

deflection guidelines for your application. If your application has specific engineering requirements, please contact the 3form Product Technology group for additional direction.

HEAT FORMING

3form *chroma* can be heated and formed to produce simple or even complex curves and shapes. The minimum inner radius for a heat formed shape should not be less than 3 times the sheet thickness. The optimal forming temperature ranges from 300º- 330ºF.

COLD BENDING

Though 3form *chroma* is commonly used in flat or heat curved applications, the polymeric nature of the material allows a minimal amount of cold bending for a given panel. The table below shows the minimum suggested radius for 3form *chroma* at a given gauge:

THICKNESS	MINIMUM BEND RADIUS
0.250" (6mm)	115" (292 cm)
0.375" (9mm)	170" (432 cm)
0.500" (12mm)	225" (571 cm)
1.000" (25mm)	450" (1143 cm)
2.000" (50mm)	900" (2286 cm)

EDGE FINISHING

Edges of 3form *chroma* panels are able to be machined or routed into a variety of different forms. In addition to a straight edge, edges may accept beveling, rounding, etc. Additional finishing, such as sanding or polishing, can also be provided to some edges.

REFINISHING

One of the unique benefits of 3form *chroma* is its ability to be refinished. If 3form *chroma* needs to be refinished for any reason, the panels may be renewed by sanding. Begin by dry sanding with a course grit paper (100 or 150 grit) to remove blemishes/scratches. Continue sanding with gradually finer grit papers until the surface is smooth and level and the blemish/scratches are removed. Complete the refinishing process by sanding with a 220 grit paper to attain a matte finish.

Even finer grit papers may be used to attain a satin or semi-polished appearance. With papers greater than 400 grit, wet sanding (with water) should be employed.

Be sure to keep sanders in motion at all times when refinishing surfaces or edges. Only use light pressure with power sanders in order to maintain evenness and avoid overheating of the sheet surface.

Select Physical Properties

MECHANICAL	ASTM METHOD	TYPICAL VALUES	
		US CUSTOM	METRIC
specific gravity	D792	1.19	759 kg/cm^2

3form® chroma

tensile strength	D638	10,000 psi	
elongation at rupture	D638	4.0%	
modulus of elasticity	D638	400,000 psi	28.1x103 kg/ cm^2
flexural strength (rupture)	D790	16,000 psi	1123 kg/cm^2
compressive strength (yield)	D695	17,500 psi	1230 kg/cm^2
compressive deformation (4000 psi (281 kg/cm2), 122°F (50° C), 24 hours)	D621	≤0.85%	
shear ultimate strength	D732	10,000 psi	703 kg/cm^2
impact strength (charpy method)	D256		
	notched	2.1 lbf*in/in	0.4 kgf*cm/cm
	un-notched	107 lbf*in/in	20 kgf*cm/cm
izod notched impact strength	D256	≤0.25 ft-lb/in	≤13.3 J/m
rockwell hardness	D785	M-103	
barcol hardness	D2583	49	
residual shrinkage (internal strain)	D702	2%	
OPTICAL			
refractive index	D542	1.49	
light transmission (total)	D1003	92%	
haze	D1003	<1%	
THERMAL			
forming temperature		300-330°F	149-157°C
deflection temperature (264 psi [18.6 kg/cm^2])	D648	99°C	210°F
vicat softening point	D1525	239°F	115°C
max recommended service temp		150°F	66°C
coefficient of thermal conductivity (k-factor)	cenco-fitch	1.3 btu/(hr)ft^2(°F)	0.19 w/m°K

3form® chroma

coefficient of thermal expansion D696	°F	10^{-5}(in/in/°F)	°C	10^{-5}(mm/mm/°C)
	-40	2.9	-40	5.22
	-20	3.0	-29	5.40
	0	3.2	-18	5.76
	+20	3.4	-1	6.12
	+40	3.7	+4	6.66
	+60	4.0	+16	7.20
	+80	4.3	+27	7.74
	+100	4.7	+38	8.46
	+120	5.1	+49	9.18
	+140	5.4	+60	9.72

flammability (1/8 inch [3mm] thick)	D635	1.2 in/min	25 mm/min
self-ignition temperature	D1929	852°F	490°C
specific heat @ 77°F [25°C]		428 cal/lb°F	0.35 cal/g°C
smoke density rating	D2843	4.1%	

Chemical Resistance of 3form Chroma to Select Compounds

The following table provides indicative performance of the chemical resistance characteristics of clear 3form *chroma* panels. The following codes are used to describe the chemical resistance characteristics:

R = RESISTANT

Indication that 3form *chroma* is able to withstand the identified compound for long exposure periods up to 120°F.

LR = LIMITED RESISTANCE

3form *chroma* is only able to resist affect when in contact with this compound for short periods at room temperature. It is advised that further determination of the affect of the substance in your particular application be further tested.

N = NOT RESISTANT

3form *chroma* is not resistant to the compound. The material will swell, craze, haze, dissolve or experience some physical change when exposed to this substance.

Polymer materials are affected by chemicals in different ways. Factors that initiate a change in performance or appearance when exposed to chemicals can be attributed to fabrication methods, exposure conditions, concentration of chemical substances or exposure duration of certain substances. Such factors can even influence the final affect on substances that 3form *chroma* is considered “Resistant” to by this method.

3form® chroma

Further details are explained below:

FABRICATION

Stresses generated from sanding, grinding, drilling, polishing, machining, sawing and/or forming (hot or cold).

EXPOSURE

Exposure duration, stresses imparted during the application life-cycle due to loads, temperature changes, heat, environments, etc.

APPLICATION OF CHEMICALS

Application from contact, rubbing, wiping, spraying, soaking, etc. Also having an affect is the relative concentration of the chemical in question.

CHEMICAL	CODE	CHEMICAL	CODE
acetic acid (5%)	R	ammonium hydrozide (conc.)	R
acetic acid (glacial)	N	aniline	N
acetic anhydride	LR	battery Acid	R
acetone	N	benzaldehyde	N
acrylic paints and lacquers	LR	benzene	n
ammonia (aqueous solution)	R	bituminous emulsion	n
ammonium chloride (saturated)	R	bromine	N
ammonium hydroxide (10%)14	R	butanol	LR
butyl acetate	N	glycol	R
calcium chloride (saturated)	R	heptane	R
calcium hypochlorite	R	hexane	R
carbon tetrachloride	N	hot bitumen	LR
cement	R	hydrochloric acid	R
chlorine water	LR	hydrofluoric acid (40%)	N
chloroform	N	hydrogen peroxide (3%)	R
chromic acid (40%)	N	hydrogen peroxide (28%)	N
citric acid (10%)	R	iso octane	R
cottonseed oil (edible)	R	isopropyl alcohol	NR
detergent solution	R	kerosene	R
diesel oil	R	lacquer thinner	N
diethyl ether	N	lactic acid (80%)	LR
dimethyl formamide	N	methane	R
dioctyle formamide	N	methyl alcohol (50%)	LR

3form® chroma

ethyl acetate	N	methyl alcohol (100%)	N
ethyl alcohol (50%)	LR	methyl ethyl ketone (MEK)	N
ethyl alcohol (95%)	N	methylene chloride	N
ethyl dichloride	N	mineral oil	R
ethylene gycol	R	mortar	R
2-ethylhexyl sebacate	R	motor fuel (benzene-free)	R
formaldehyde (40%)	R	motor fuel (with benzene)	N
formic acid (2%)	R	muriatic acid (20%)	R
formic acid (40%)	LR	nitric acid (10%)	R
gasoline (regular, leaded)	LR	nitric acid (40%)	LR
glycerine	R	nitric acid (conc.)	N
glycerol	R	oil paints (pure)	R
olive oil	R	sodium hydroxide (60%)	R
oxygen	R	stearic acid	R
ozone	R	sulfuric acid (3%)	R
phenol solution (5%)	N	sulfuric acid (30%)	R
phosphoric acid (10%)	R	sulfuric acid (conc.)	N
plaster of paris	R	thinners (general)	N
soap solution (ivory)	R	toluene	N
sodium carbonate (2%)	R	tricholoroethylene	N
sodium carbonate (20%)	R	turpentine	LR
sodium chloride (10%)	R	urine	R
sodium hydroxide (1%)	R	water (distilled)	R
sodium hydroxide (10%)	R	xylene	N

Cleaning Instructions

3form *chroma*, like all thermoplastic materials should be cleaned periodically. A regular cleaning program will help to maintain the aesthetics and life of the material.

Rinse or wipe the sheet with lukewarm water. Remove dust and dirt from 3form *chroma* with a damp, soft cloth or sponge and a solution of mild soap and/or liquid detergent in water. Rinse or wipe the 3form *chroma* again thoroughly with lukewarm water. For more stubborn stains, dirty spots or grease, surface cleaners like Fantastik® or Formula 409® also work well. After all cleaning steps, be sure to rinse thoroughly with lukewarm water.

Always use a soft, damp cloth to blot dry. Rubbing with a dry cloth can scratch the material and create a static charge. Never use scrapers or squeegees on 3form *chroma*. Also avoid scouring compounds, gasoline, benzene, acetone, carbon tetrachloride, certain deicing fluids, lacquer thinner or other strong solvents.

3form® chroma

DO NOT

Use squeegees or scrapers as they may scratch the sheet

Use scouring compounds or solvents such as: acetone, gasoline, benzene, carbon tetrachloride, or lacquer thinner to clean the sheet.

Use abrasives or highline alkaline cleaners

Use a dry cloth or a cloth of synthetic fiber such as rayon or polyester as they may scratch the sheet.

DO

Use warm water, mild detergent and a soft cloth or chamois

Rinse surface thoroughly after cleaning with lukewarm water

Blot dry with slightly damp, soft cloth or chamois

IMPORTANT

If a cleaning material is found to be incompatible in a short-term test, it will usually be found to be incompatible in the field. The converse, however, is not always true. Favorable performance is no guarantee that actual end-use conditions have been duplicated. Therefore, these results should be used as a guide only and it is recommended that the user test the products under actual end-use conditions.

For additional information about 3form *chroma* please contact 3form @ 801.649.2500

3form® *eco*resin™

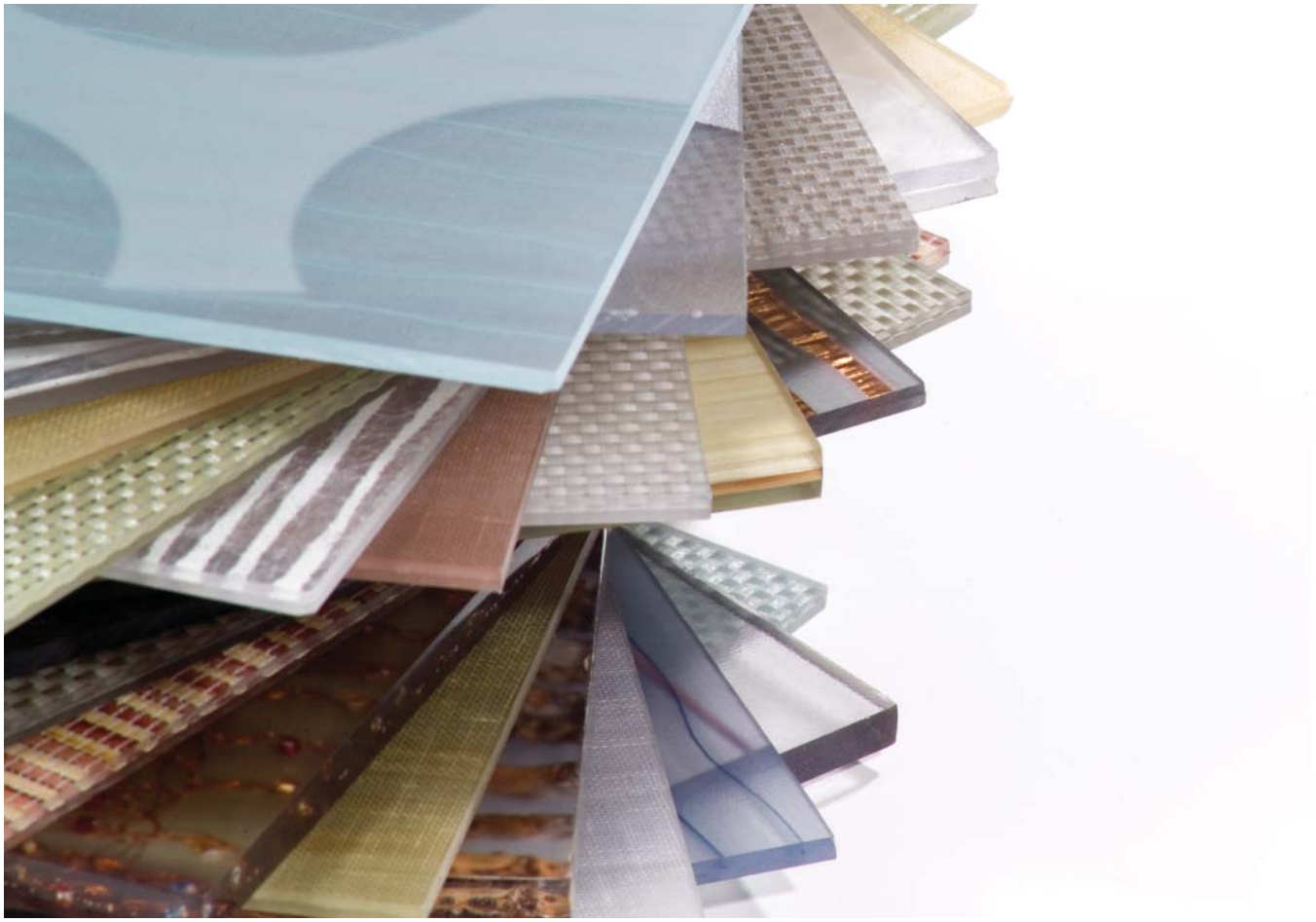

3form® *eco*resin™ is a dynamic panel system. The choices of *eco*resin panels are as diverse as your imagination. By allowing you to custom-select the color, pattern, texture, interlayer and finish of your material, *eco*resin transforms into the perfect medium for your architectural application.

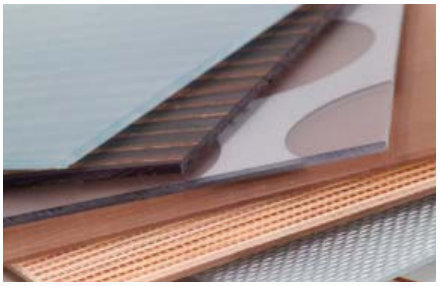

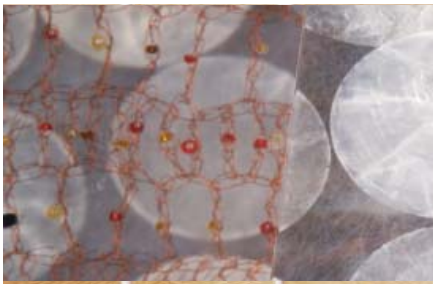

For more information, please visit **3-form.com** or call **800.726.0126**

CU
127

3form® *eco*resin

Product Description

*Eco*resin is a dynamic panel system. Options offered by *eco*resin panels are as diverse as your imagination. By allowing you to custom-select the color, pattern, texture, interlayer and finish of your material, *eco*resin transforms into the perfect medium for your architectural application.

An award-winning 3form product line, *eco*resin has the added benefits of being made from a specially-formulated co-polyester resin which is both environmentally responsible and high-performing. *eco*resin has been engineered to incorporate 40% post-industrial re-grind content, without compromising its overall physical properties. From a recycle stand-point, *eco*resin is also compatible with one of the largest post-consumer recycle streams, and is GREENGUARD Indoor Air Quality Certified®.

FEATURES AND BENEFITS

Produced on a individual order basis, allowing for creative design and product selection (minimum order quantity – ONE sheet!)
Post-formable into virtually any shape or size for eye-catching installations
Enables qualification for LEED credits for building sustainability
Very tough, allowing for easy fabrication and maximum installed durability
Extremely versatile which enables designers to achieve full design potential
Lightweight, half the density of glass, which makes for easier installation and reduces structural support requirements
Excellent chemical resistance which reduces potential harm incurred by cleaning agents
*eco*resin is GREENGUARD Indoor Air Quality Certified®

AVAILABLE COLORS

Available in a variety of standard colors
Custom colors also available

TEXTURES/PATTERNS/FINISHES

The *eco*resin collection includes a wide range of textures and patterns from our Organics, Moderna, Play, Texture, Color, and Graphic sub-collections.

Each item in the *eco*resin collection comes standard with both a front and back finish. Additionally, 3form provides the option of substituting between 8 standard finishes. In most cases, you can even pick different front and back finishes. Finishes include:

Liquid Silver - Smooth, silver, mirror-like finish on the backing of a panel
Markerboard Plus - Shiny, patent leather look which allows the *eco*resin surface to be used as a Dry Erase Board
Patent - Shiny, high gloss finish
Patina - Non-glare, slightly frosted, worn-look finish

3form® ecoresin

Pixel - Micro-grid look, creates moiré when applied to both sides, cannot be used in pieces > 1/2"
Sandstone - Grainy texture, slightly frosted look
Stucco - Pebble-like finish
Supermatte - MicroGrain texture, frosted look
Topo - Larger pebble-like finish
Opaque White Backer
Vision Plus

PANEL SIZES AND TOLERANCES

3form ecoresin panels are offered in 4' x 8' (1.2 m x 2.4 m) and 4' x 10' (1.2 m x 3 m). All dimensions and squareness (standard with custom) are subject to a 1/16" (1.5 mm) tolerance. 5' x 10' (1.5 m x 1.3 m) is also available though some restrictions apply.

Ecoresin is available in gauges from 1/16 inch to 1 inch.

All 'Solo' Sheets

NOMINAL GAUGE	MINIMUM ALLOWANCE GAUGE	MAXIMUM ALLOWANCE GAUGE
1/16" (0.0625")	0.050	0.070
1/8" (0.125")	0.104	0.132
3/16" (0.1875")	0.168	0.192
1/4" (0.250")	0.212	0.260
3/8" (0.375")	0.324	0.384
1/2" (0.500")	0.436	0.508
3/4" (0.750")	0.648	0.768
1" (1.000")	0.850	1.060

Non 'Solo' product sheets

NOMINAL THICKNESS	MINIMUM ALLOWANCE GAUGE	MAXIMUM ALLOWANCE GAUGE
1/8" (0.125")	0.098	0.138
3/16" (0.1875")	0.155	0.205
1/4" (0.250")	0.196	0.306
3/8" (0.375")	0.304	0.434
1/2" (0.500")	0.412	0.562
3/4" (0.750")	0.618	0.798
1" (1.000")	0.850	1.090

Sheet tolerance readings are based on an average of several on measurements along both long edges of each panel. These measurements are taken 2-3 inches (50-75 mm) from the edges of the panel.

3form® ecoresin

Specifications

FLAMMABILITY & SMOKE TEST RESULTS – BUILDING CODE APPROVALS

*eco*resin panels (a polyester-based material), have been independently tested and meet the criteria for approved interior finishes and "light transmitting" resin materials as described in the 2003 International Building Code®.

TEST	3FORM *ECO*RESIN	RESULT
ASTM D 2843 Smoke Density	71.6%	PASS Less than 75
ASTM D 635 Flame Spread	Self extinguishing	PASS CC1
ASTM D 1929 Self-ignition Temperature	716°F	PASS Greater than 650°F
ASTM E84-03		
Flame Spread, 1/4" to 1" thickness	65	Class B: 26-75
Smoke generated	425	<450
ASTM E84-03		
Flame Spread, 1" thickness	20	Class A: 0-25
Smoke generated	250	<450
NFPA 286, 1/4" thickness	Pass	Class A

PANEL WEIGHT

THICKNESS (INCHES)	WEIGHT FLUX (LB/FT²)
1/16" (1.5 mm)	0.4 lb/ft² (2.0 kg/m²)
1/8" (3 mm)	0.8 lb/ft² (4.0 kg/m²)
3/16" (4.5 mm)	1.2 lb/ft² (6.1 kg/m²)
1/4" (6 mm)	1.7 lb/ft² (8.1 kg/m²)
3/8" (9.5 mm)	2.5 lb/ft² (12.2 kg/m²)
1/2" (12.5 mm)	3.3 lb/ft² (16.1 kg/m²)
3/4" (19 mm)	5.0 lb/ft² (24.4 kg/m²)
1.0" (25 mm)	6.6 lb/ft² (32.2 kg/m²)

EXPANSION/CONTRACTION ALLOWANCES

Like all resin products, 3form *eco*resin will expand and contract nominally with fluctuations in temperature. The following formula provides allowances that should be made in framed or fitted applications:

Longest length of panel (inches) x temperature change of the sheet (°F) x 0.00004 =
Amount of Linear Expansion/Contraction (inches)

3form® *eco*resin

Example:

A 48" x 96" panel that experiences a 50°F temperature change will expand/contract:
96 inches x 50 degrees x 0.00004 in/in °F = 0.192 inches (expansion)

Installers should take extra precautions if installation is occurring before the HVAC systems are operational. Allowances should also be made in the following situations:

Fastening points
Holes for standoffs and other hardware
Meeting points for multiple sheets of 3form *eco*resin

ULTRAVIOLET EXPOSURE PERFORMANCE

UV stabilizers, when incorporated with 3form *eco*resin panels, have proven to be very effective in maintaining the integrity of the panels with extended exposure to UV radiation. The following charts provide an overview of the effectiveness of UV stabilizers that are incorporated with 3form *eco*resin panels. Following 6,000 kJ of exposure (representing approximately 10-years outdoor Florida exposure) it is shown that the 3form *eco*resin with UV stabilization exhibits excellent performance. The following chart demonstrates that the b* shift remains below the 5 b* visual threshold (and shows a leveling change over time).

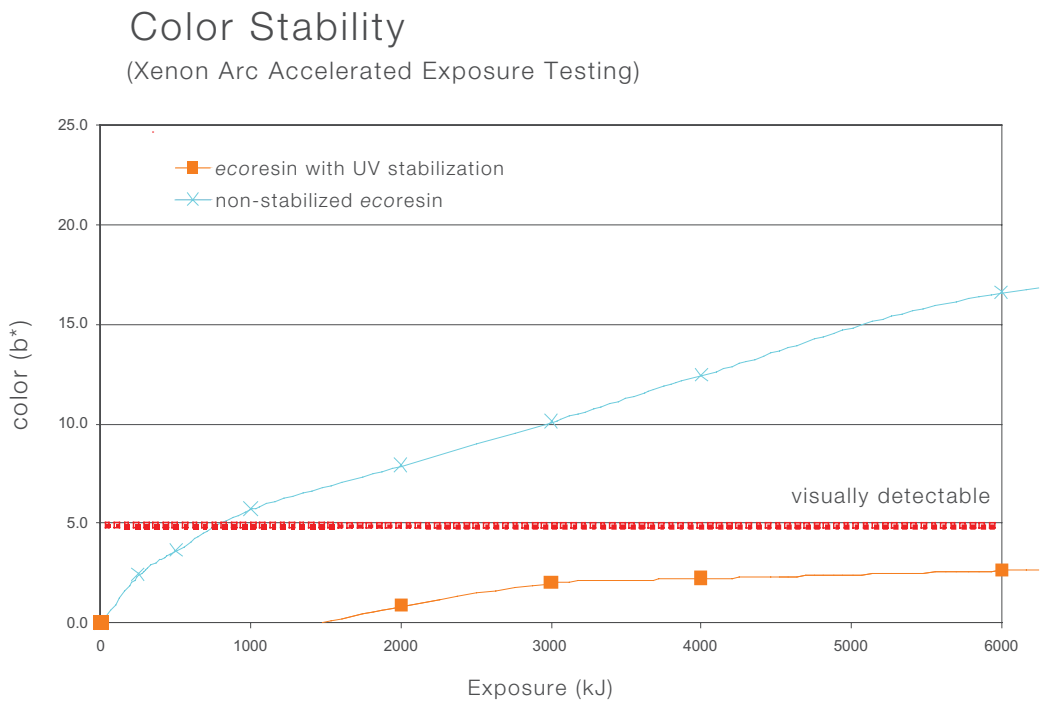

3form® *eco*resin

Additionally, as demonstrated in the following chart, *eco*resin panels maintain tremendous physical integrity when produced with UV stabilization technology.

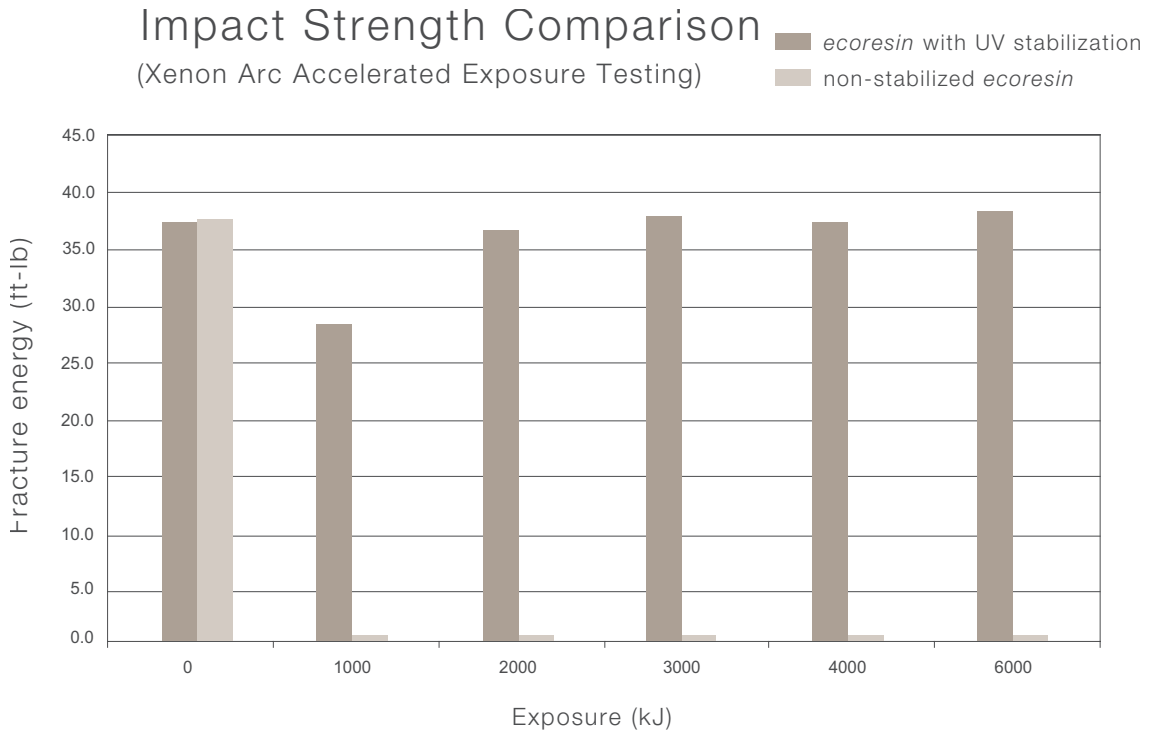

DEFLECTION

3form *eco*resin will exhibit different amounts of deflection given a variety of factors: fastening techniques, loads, gauges and panel dimensions to list a few. Your 3form Representative can assist you with general deflection guidelines for your application. If your application has specific engineering requirements, please contact the 3form Product Technology team for additional direction.

HEAT FORMING/COLD BENDING

*eco*resin can be cold bent for simple bends and curved areas. As a rule, a minimum radius of 100 times thickness is acceptable for *eco*resin (will depend on innerlayer material).

*ECO*RESIN THICKNESS	MINIMUM COLD BEND RADII
1/16" (1.5 mm)	7" (178 mm)
1/8" (3 mm)	12" (305 mm)
3/16" (4.5 mm)	19" (483 mm)
1/4" (6 mm)	25" (635 mm)

3form® *eco*resin

3/8" (9.5 mm)	37" (940 mm)
1/2" (12.5 mm)	50" (1270 mm)
3/4" (19 mm)	75" (1905 mm)
1" (25 mm)	100" (2540 mm)

Because of its low thermoforming temperature, *eco*resin is easy to strip heat and line bend. Remove protective masking from area to be bent. Using a line heat device, regulate the heat to a temperature that allows *eco*resin to reach 250°F-300°F (138°C -160°C). Thicker gauge requires a longer period of time to allow heat penetration. Place sheet over heat source at bend area. Allow heat to soften material; time depends on gauge, 1/8" (3 mm) typically requires 2 minutes. Remove from heat and make desired bend, and place in wood or fabric-covered aluminum fixture to cool.

- Always strip heat a sample piece first
- Avoid drafty rooms which can cause uneven heating and cooling
- Be sure to cover forming fixtures with soft fabric to avoid scratching *eco*resin
- Bending *eco*resin when it is too cold results in a highly-stressed, weakened material
- Thicker gauges (over 1/8") may require heating on both sides by turning the sheet over periodically
- Always bend the sheet with the heated side forming the outside radius

EDGE FINISHING

Edges of 3form *eco*resin panels are able to be machined or routed into a variety of different forms. In addition to a straight edge, edges may accept beveling, rounding, etc. Additional finishing, such as sanding or polishing, can also be provided to some edges.

REFINISHING

*eco*resin finishes such as patent can have blemishes polished out; however, the majority of 3form products have a surface finish that would be ruined by buffing. “Stucco” is our most durable finish. This finish is recommended for any high-traffic areas.

Selected Mechanical and Physical Properties for 3form *eco*resin

					TYPICAL VALUE					
			UNITS		0.060" (2 MM)		0.118" (3 MM)		0.236" (6 MM)	
PROPERTY*	CONDITIONS	ASTM METHOD	SI	U.S. CUSTOMARY	SI	U.S. CUSTOMARY	SI	U.S. CUSTOMARY	SI	U.S. CUSTOMARY
GENERAL										
Density	23° C (73° F)	D 1505	kg/m^3	g/cm^3	1,270	1.27	1,270	1.27	1,270	1.27
Water Absorption	23° C (73° F), 24h immersion	D 570	%	%	0.3	0.3	0.2	0.2	0.1	0.1
Heat Deflection Temperature	@66psi	D648	°C	°F	—	—	73.3	164	—	—

3form® ecoresin

					TYPICAL VALUE					
			UNITS		0.060" (2 MM)		0.118" (3 MM)		0.236" (6 MM)	
PROPERTY*	CONDITIONS	ASTM METHOD	SI	U.S. CUSTOMARY	SI	U.S. CUSTOMARY	SI	U.S. CUSTOMARY	SI	U.S. CUSTOMARY
MECHANICAL										
Tensile Stress @ Yield	50 mm/min (2 in./min)	D 638	MPa	psi	53	7,700	53	7,700	53	7,700
Tensile Stress @ Break	50 mm/min (2 in./min)	D 638	MPa	psi	31	4,500	26	3,800	26	3,800
Elongation @ Yield	50 mm/min (2 in./min)	D 638	%	%	4.7	4.7	4.8	4.8	5.0	5.0
Elongation @ Break	50 mm/min (2 in./min)	D 638	%	%	210	210	50	50	40	40
Tensile Modulus	5.0 mm/min (0.2 in./min)	D 638	MPa	psi	—	—	2,200	320,000	—	—
Flexural Modulus	1.27 mm/min (0.05 in./min)	D 790	MPa	psi	2,200	320,000	2,100	310,000	2,000	290,000
Flexural Strength	1.27 mm/min (0.05 in./min)	D 790	MPa	psi	71	10,300	77	11,200	83	12,000
Rockwell Hardness	—	D 785	R Scale	R Scale	104	104	115	115	117	117
Safety Glazing	75°F 23.8°C	ANSI 97.1	does not break		—	—	PASS		—	—
Izod Impact Strength, Notched	23°C (73°F)	D 256	J/m	ft·lbf/in.	—	—	88	1.7	62	1.2
	0°C (32°F)	D 256	J/m	ft·lbf/in.	—	—	66	1.2	—	—
	–30°C (–22°F)	D 256	J/m	ft·lbf/in.	—	—	39	0.7	—	—
Impact Strength, Unnotched	23°C (73°F)	D 4812	J/m	ft·lbf/in.	—	—	NB**	NB**	NB**	NB**
	0°C (32°F)	D 4812	J/m	ft·lbf/in.	—	—	NBB	NBB	—	—
	–30°C (–22°F)	D 4812	J/m	ft·lbf/in.	—	—	NBB	NBB	—	—
Impact Resistance—Puncture, Energy @ Max. Load	23°C (73°F)	D 3763	J	ft·lbf	21	15	33	24	71	53
	0°C (32°F)	D 3763	J	ft·lbf	25	18	40	30	93	69
	–10°C (14°F)	D 3763	J	ft·lbf	26	19	42	31	96	71
	–20°C (–4°F)	D 3763	J	ft·lbf	28	21	43	32	>100	>74
	–30°C (–22°F)	D 3763	J	ft·lbf	25	18	47	34	>100	>74

* Unless noted otherwise, all tests are run @ 23°C (73°F) and 50% relative humidity, using specimens machined from extruded sheeting with a thickness as indicated.

**Nonbreak as defined in ASTM D 4812 using specimens having a thickness as indicated. Properties reported here are typical of average lots. 3form makes no representation that the material in any particular shipment will conform exactly to the values given.

SOUND TRANSMISSION CLASS (STC) VALUES FOR VARIOUS GAUGES OF *ECO*RESIN

Measurement protocol: ASTM E 90 - Standard Test Method for Laboratory Measurement of Airborne Sound Transmission Loss of Building Partitions and Elements

3form® ecoresin

ECORESIN THICKNESS	STC VALUES
1/8" (0.118")	25
3/16" (0.177")	29
1/4" (0.236")	31
3/8" (0.354")	34
1/2" (0.500")	34
1" (1.00")	39

CHEMICAL RESISTANCE OF 3FORM *ECO*RESIN TO SELECT COMPOUNDS

The following table provides indicative performance of the chemical resistance characteristics of *eco*resin tensile bars, the material from which *eco*resin panels are produced.

Polymer materials are affected by chemicals in different ways. Factors that initiate a change in performance or appearance when exposed to chemicals can be attributed to fabrication methods, exposure conditions, concentration of chemical substances or exposure duration of certain substances. Such factors can even influence the final affect on substances that 3form *eco*resin is considered "Resistant" to by this method. Further details are explained below:

Fabrication: Stresses generated from sanding, grinding, drilling, polishing, machining, sawing and/or forming (hot or cold).

Exposure: Exposure duration, stresses imparted during the application life-cycle due to loads, temperature changes, heat, environments, etc.

Application of chemicals: Application from contact, rubbing, wiping, spraying, soaking, etc. Also having an affect is the relative concentration of the chemical in question.

The following data is based on complete immersion of *eco*resin tensile bars in the chemical or reagent shown. Samples remained immersed and were stored at 23ºC (73ºF) for a period of one year. Following the test period the samples were removed from immersion, weighed and measured. This table represents the changes in weight, thickness and appearance of the immersed samples over the testing period.

REAGENT	% CHANGE		
	WEIGHT	THICKNESS	APPEARANCE AFTER EXPOSURE
Acetic Acid, 5%	<1	<1	Very slight yellowing
Acetic Acid, conc.	19	18	Discolored, swollen
Acetone	16	23	Discolored (brown), swollen, rubber-like
Ammonium Hydroxide, conc.	-29	-20	Turned white, outside crumbling off
Ammonium Hydroxide, 10%	4	4	Discolored (pink), surface has blisters

3form® ecoresin

REAGENT	% CHANGE		
	WEIGHT	THICKNESS	APPEARANCE AFTER EXPOSURE
Antifreeze, Automotive Ethylene Glycol Type	<1	<1	No change
Benzene	34	43	Discolored, rubber-like
Brake Fluid, DOT3	2	2	No change
Brake Fluid	6	6	Turned yellow, surface attacked, flaking off
Carbon Tetrachloride	27	18	Discolored, swollen
Chromic Acid, 40%	<1	<1	Slightly discolored
Citric Acid, 10%	<1	<1	Slight yellowing
Cottonseed Oil	<1	<1	Very slight yellowing
Deionized Water	<1	<1	Slight yellowing
Detergent, Alconox (0.25%)	<1	<1	Slight yellowing
Di (2-Ethylhexyl) Phthalate	<1	<1	Very slight yellowing
Dibutyl Sebacate	<1	1	Slight yellowing
Diesel Fuel	<1	2	Discolored
Dimethyl Formamide	22	39	Badly discolored and distorted
Ethanol, 50%	<1	<1	Slight yellowing
Ethanol, 100%	<1	<1	Very slight yellowing
Ethyl Acetate	20	24	Badly discolored and swollen, softened
Ethylene Dichloride	—	—	Completely deteriorated after 1 week
Gasohol, 10% Ethanol	9	8	Cloudy, slight yellowing
Gasohol, 10% Methanol	11	10	Cloudy, yellowed
Gasoline, Base for Gasohol	6	6	Slight yellowing
Gasoline, Premium Unleaded	2	3	Discolored
Gasoline, Regular	<1	<1	Slight yellowing
Gasoline, Regular Unleaded	2	2	Discolored
Grease, Automotive	<1	<1	No change
Hand Cleaner, Waterless Jergens SBS30	<1	2	No change
Hexane	<1	<1	Slight yellowing
Hydrochloric Acid, conc.	1	<1	Badly discolored, blisters under surface
Hydrochloric Acid, 10%	<1	<1	Slight yellowing
Hydrogen Peroxide, 3%	<1	<1	Slight yellowing
Hydrogen Peroxide, 28%	<1	<1	Slight yellowing
Isooctane	<1	<1	Very slight yellowing

3form® ecoresin

REAGENT	% CHANGE		
	WEIGHT	THICKNESS	APPEARANCE AFTER EXPOSURE
Kerosene	<1	<1	Very slight yellowing
Lacquer Thinner	7	6	Cloudy, white
Methyl Alcohol	<1	<1	Very slight yellowing, crazing
Mineral Oil	<1	<1	Very slight yellowing
Motor Oil	<1	<1	No change
Nitric Acid, conc.	—	—	Completely deteriorated after 1 wk.
Nitric Acid, 10%	<1	<1	Slight yellowing
Nitric Acid, 40%	1	<1	Turned white
Oleic Acid, 83%	<1	<1	Very slight yellowing
Olive Oil	<1	<1	Very slight yellowing
Penetrating Oil, Liquid Wrench #1	10	11	Discolored
Phenol, 5%	13	14	Turned black
Silicone Spray Lubricant	67	34	White, swollen
Soap Solution, 1%	<1	<1	Slight yellowing
Sodium Carbonate, 2%	<1	<1	Slight yellowing
Sodium Carbonate, 20%	<1	<1	Slight yellowing
Sodium Chloride, 10%	<1	<1	Slight yellowing
Sodium Hydroxide, 1%	<1	<1	Slight yellowing
Sodium Hydroxide, 10%	8	6	Slight yellowing
Sodium Hypochlorite, 3.5%	<1	<1	Slight yellowing
Sulfuric Acid, conc.	—	—	Completely deteriorated after 1 wk.
Sulfuric Acid, 3%	<1	<1	Slight yellowing
Sulfuric Acid, 30%	<1	<1	Slight yellowing
Tapping Oil	<1	1	No change
Toluene	26	31	Turned white, softened
Transformer Oil	<1	<1	Very slight yellowing
Transmission Fluid, Auto	<1	<1	No change
Turpentine	<1	<1	Slight yellowing

3form® *eco*resin

Cleaning Instructions

3form *eco*resin, like all thermoplastic resin materials, should be cleaned periodically. A regular, seasonal cleaning program will dramatically help prevent noticeable weathering and dirt build-up.

Rinse the sheets with lukewarm water. Remove dust and dirt from *eco*resin with a soft cloth or sponge and a solution of mild soap and/or liquid detergent in water. A 50:50 solution of isopropyl alcohol and water also works well. Rinse thoroughly with lukewarm water.

Always use a soft, damp cloth to blot dry. Rubbing with a dry cloth can scratch the material and create a static charge. Never use scrapers or squeegees on *eco*resin. Also avoid scouring compounds, gasoline, benzene, acetone, carbon tetrachloride, certain deicing fluids, gasoline, lacquer thinner or other strong solvents.

Do not:

- Use a squeegee
- Strong solvents, highly alkaline or abrasive cleaning agents
- Clean in hot sun or elevated temperatures
- Rub with a dry cloth

PRESSURE WASHING

Pressure washing can also be an effective way to remove miscellaneous debris from surfaces of 3form *eco*resin installations that are in exterior or hard-to-reach places.

Pre-soak panels with a light water spray to loosen and remove incidental surface debris.

It is recommended that the water pressure for cleaning *eco*resin panels be 1,500 psi or less. 3form *eco*resin is a tough material but can be damaged if high pressure is concentrated in a single position too long. Use a gradual sweeping motion over the application. Never concentrate water spray in a single position. Pressure nozzle should never be positioned closer than 8" (203 mm) from the panel surface.

Test a portion of the sheet first before spraying. If test piece shows any sign of material fatigue, abrasion or delamination – discontinue pressure washing and proceed with manual cleaning instructions as described above.

Coated or painted parts are not suitable for pressure washing as finish may be stripped off. Pressure washing is not suitable for *eco*resin panels that have been edge sealed. If using detergent, use mild detergents only. Rinse sheet with light water spray after washing.

3form® MATERIALSOLUTIONS

varia™ flammability + smoke test results

3form Varia™ meets the performance requirements established by the 2003 International Building Code (IBC) for light transmitting plastics. The provisions of these codes provide adequate regulation for most applications of light transmitting plastics.

For use as an interior finish, ASTM E84 testing has been performed and ¼" *Varia* produced from *eco*resin™ achieves a class B rating, with a flame spread index less than 75 and a smoke density less than 450. *Varia* at 1" thickness meets the criteria for a Class A rating, with a flame spread index less than 25 and a smoke density less than 450.

Note: A class B material can be used in place of a class A material when installed with an approved automatic fire suppression system. (Section 803.5 of the 2003 IBC)

NFPA 101-00 (Section 10.2.4.4) refers to the use of light-transmitting plastic for interior applications to authorities and organizations having local jurisdiction. Such authorities typically adopt the IBC, which is supported by the *International Code Council* (ICC).

Varia is further recognized by the New York Department of Buildings (MEA#65-05 III) and the Los Angeles Department of Building Safety (LARR 25591).

There are three specific ASTM tests, evaluations which form the basis for a plastic material become recognized by the ICC. These three ASTM tests are required in the 2003 IBC, upon which officials rely for material compliance.

TEST	VARIA	RESULT
ASTMD 2843-99 Smoke Density Rating	PASS	71.6% density vs. 75% max
ASTMD 635-98 Flame Spread	PASS	CC1 rating (self-extinguishing)
ASTMD 1929-96 Self Ignition Temperature	PASS	716°F vs. 650°F minimum

VARIA UL 723/ASTM E84 TEST RESULTS

UL723 / ASTM E84 Tunnel Test	Surface Burning Characteristics
Class A (1")	Flame Spread 20
	Smoke Density 250
Class B (1/4" - 3/4")	Flame Spread 35-65
	Smoke Density 425-450

NFPA 286 TEST RESULTS

Class A (1/4")	PASS (walls only)
Class A (3/8")	PASS (stand-off condition, walls only)

The NFPA 286 corner burn test is also accepted by the 2003 IBC for interior finishes. Passing the NFPA 286 test qualifies the material as a Class A material.

All test reports are available upon request.

CU
139

ECO-GRES™ Mosaics

Available Sizes:
1" x 1" mosaics back mounted on 12" x 12" sheets.

TEST PERFORMED	ASTM	ISO	RESULTS
Water absorption	C-373	ISO 10545-3	>0.1%
Breaking Strenght		ISO 10545-4	800N
Modulus of Rupture	C-99	ISO 10545-4	110N/mm^2
Abrasion Resistance	C-501	IISO 10545-7	max. 120mm^3
Linear Thermal Expansion	E-228	ISO 10545-8	7,9x10^{-6} K^{-1}
Thermal Shock Resistance	C-484	ISO 10545-9	Conforms
Coefficient of Friction	C-1028	ISO 10545-17	Slip resistant, min. R10
Stain Resistance			Class 3
Chemical Resistance		ISO 10545-13	Class ULB

Safecoat®

SemiGloss Zero VOC *Interior*

DESCRIPTION: Safecoat SemiGloss Zero VOC is a premium quality, fast curing enamel designed for interior surfaces where a semi-gloss finish and superior film formation properties are needed. It is particularly well suited for areas in which the health of the occupants is a concern: schools, hospitals, homes, offices - anywhere people want to reduce their exposure to toxic chemicals. Safecoat paints have almost no odor during application and are odor free once cured. They contain no formaldehyde, ammonia, crystalline silica, or ethylene glycol.

USE ON: Walls, ceilings, wallboard, properly cured and primed plaster, masonry and primed metal.

PRODUCT NUMBER AND CONTAINER SIZE:
14212 (quart), 14112 (gallon) and 14312 (five gallon).

ADVANTAGES / SIGNIFICANT BENEFITS:
- Superior, durable finish. Fully tintable to all pastel colors (some colorant systems may add a small amount of VOC).
- Safely used by and for the chemically sensitive.
- Low odor, non-offensive to installer and occupant.
- Fights indoor air pollution, limits outgassing from the substrate.
- Zero VOC content, meets or exceeds all federal and state air quality regulations, including California.

SURFACE PREPARATION: Careful surface preparation is the most important part of painting. Surfaces to be coated with Safecoat SemiGloss Zero VOC should be sound and cleaned of dirt, grease and oil. Cleaning with an odorless, dye-free, all-purpose cleaner like ***SafeChoice Super Clean*** is recommended. Previously painted surfaces in poor condition should be scraped, sanded smooth, and primed with a coat of ***Safecoat Primer Undercoater***. Always test for adhesion over prior coatings (water based paints do not adhere well to oil based finishes without removal or careful surface preparation, for example). New wallboard or sheetrock should first be coated with ***Safecoat New Wallboard Primecoat HPV***. Porous new wood should be sealed and sanded before priming, preferably with a safe product such as ***Safecoat Transitional Primer***. Water and other stains must be blocked so they do not bleed through.

The best finish will be achieved with a primer and two finish coats. Environmental conditions are crucial: if the air temperature is too hot or too cold, the product will not cure properly; if the air or the wood is too dry, or there is too much moisture in or on the surface, other problems may result. In addition, many surfaces contain water-soluble tannins or acids which are activated by the application of a water based product and will “bleed through” to the surface. All of these conditions can be avoided with proper preparation. Finally, Safecoat products are formulated to work together. Optimum results are best obtained by using a Safecoat primer, for example, before applying Safecoat paint. Of course, always read the application instructions before beginning the job.

APPLICATION: Always have adequate ventilation. The surface should be completely dry before application. Before using, stir well, then apply as is, using a high quality nylon or synthetic bristle brush or roller of appropriate nap (1/4”-3/8” nap recommended). Do not apply in thick films or load paint onto the surface; thin coats are better than one thick coat. For spraying, reduce with up to 1/2 pint of water per gallon. Use an airless sprayer, minimum 2000 p.s.i., with a .015-.017 tip. Use a 60 mesh filter. When spraying, do not substitute backrolling for a second coat. Always use a painter’s mask when spraying.

COVERAGE: One gallon of Safecoat SemiGloss Zero VOC covers approximately 350 square feet in one coat depending on surface porosity. Untreated drywall will require several coats.

CLEAN-UP: Clean tools and equipment while they are still wet with a solution of ***SafeChoice Super Clean*** and warm water.

DRYING/CURING TIME: Under normal conditions, Safecoat SemiGloss Zero VOC dries to touch in one hour. Wait at least four hours before applying each additional coat - longer if rainy or high humidity conditions prevail. Normal conditions include a dry surface, access to fresh air flow, moderate humidity, and temperatures above 55°F. Thick application, high humidity or conditions other than normal will cause Safecoat to dry and cure more slowly.

COLORS: Safecoat SemiGloss Zero VOC is available in a pastel base which may be tinted to any pastel shade with a water-based tinting system available at most paint stores.

LIMITATIONS: Unlike conventional paints, Safecoat is made without formaldehyde preservatives. Do not contaminate. Store in airtight containers. Do not use when indoor or surface temperature is below 55°F.

HEALTH PRECAUTIONS: As with all coatings and stains, keep container tightly closed and out of the reach of children. Do not take internally. Keep from freezing. Always use adequate ventilation. If you are chemically sensitive, always test for personal tolerance.

LIMITED LIABILITY: The great variation between environmental factors, possible surfaces and application techniques, and the lack of control we have over such matters, must affect our policies. Safecoat products are guaranteed not to be defective when applied and used in accordance with instructions. However, liability, whether express or implied, is limited to replacement of product or refund of purchase price and cannot include liability for labor costs or consequential damages. Because of the variety of circumstances affecting each job, it is the user’s responsibility to determine the suitability and safety of the product for any particular application. This limited warranty may not be modified or extended by manufacturer’s representatives, distributors, or dealers of AFM products. **We particularly recommend that users always test in small inconspicuous areas before application to the entire surface.**

AMERICAN FORMULATING AND MANUFACTURING
3251 Third Avenue, San Diego, CA 92103 • Tel: 619-239-0321 Fax: 619-239-0565

Safecoat®

Transitional Primer *Interior/Exterior*

DESCRIPTION: Safecoat Transitional Primer is a premium quality, waterbased, flat finish universal primer specifically formulated to solve difficult application problems without the use of toxic and malodorous chemicals. It is particularly well suited for transitioning from existing oil based painted surfaces to waterbased coatings. Because it has an extremely tight and efficient polymer network, it is when properly applied useful as a stain blocker for many of the knot holes, water soluble stains and oils, tannins and terpenes in wood which can "bleed through" to the surface upon the application of traditional waterbased primers. Like all Safecoat paints, it is the least toxic product of its type, and contains no naphtha or other aromatic solvents, and no formaldehyde, ethylene glycol, ammonia, acetone, heavy metals, crystalline silica or other carcinogenic or hazardous materials. Safecoat Transitional Primer is naturally low in odor, and unlike other paints contains no masking agents or fragrances to hide the smells of toxic chemicals.

USE ON: Most interior and exterior surfaces: walls, ceilings, wood and wood trim, fully cured plaster, stucco, masonry and drywall.

PRODUCT NUMBER AND CONTAINER SIZE:
80290 (quart), 80190 (gallon) and 80390 (five gallon).

ADVANTAGES / SIGNIFICANT BENEFITS:
- Unique molecular structure promotes strong penetration and mechanical adhesion.
- Environmentally friendly - very low VOC, the lowest toxicity for a product of its type.
- Tight polymer network makes an excellent sealer.
- "Transitions" oil based surfaces to accept waterbased coatings.
- Good stain blocker, reduces bleed through.
- Durable, high performance undercoating.
- Low odor.
- Contains no formaldehyde or aromatic hydrocarbons.
- Fights indoor air pollution.

SURFACE PREPARATION: Careful surface preparation is important. *Surfaces to be coated with Safecoat Transitional Primer should be sanded and cleaned of dirt, grease, mildew and oil.* Cleaning with an odorless, dye free, all purpose cleaner like ***SafeChoice Super Clean*** is recommended. Previously painted surfaces in poor condition should be scraped and sanded smooth before priming. Always spot test for adhesion over prior coatings. Surface should be completely dry before application.

APPLICATION: Surfaces painted with oil based coatings should be sanded to promote adhesion (all gloss must be removed). Wet sanding is recommended. USE CAUTION WHEN SANDING: some old paints contain lead and must not be handled in such a way as to introduce lead into the environment or expose workers to lead (primarily dust) through means of sanding or abrasion. Knot holes and water stains should be spot primed before undercoating the entire surface. Always have adequate ventilation. Before using, stir Safecoat Transitional Primer well, then apply as is. For spraying, reduce with up to 1/2 pint of water per gallon. Use a painter's mask when spraying. May be applied with a brush, roller or airless sprayer. Use a high quality nylon brush. A quality roller cover with a nap height of 1/4" to 1/2" is recommended. (Note: high pile heights will add additional texture.) Airless sprayers should have a 17/1000 to 21/1000 tip (reversible type is best). Only a 30 mesh high pressure filter should be used. Use a painter's mask when spraying. For full coverage application, overlap preceding application with 1/4 to 1/2 the fan width at a distance of 18" from surface. Do not apply on cold, damp days or if surface, container or air temperature is below 55 degrees.

COVERAGE: One gallon of Safecoat Transitional Primer covers approximately 300-350 square feet in one coat depending on method of application and surface texture and porosity. One full coat is generally sufficient for most jobs, such as for transitioning from oil based surfaces to waterbased coatings. Some stains may require two coats for complete blocking; the primer may absorb the stain into itself on the first coat, where it will be "locked up" and blocked by the second.

CLEAN-UP: Clean tools and equipment while they are still wet with a solution of ***SafeChoice Super Clean*** and warm water.

DRYING/RECOATING TIME: Under normal conditions, Safecoat Transitional Primer dries to touch within one hour. For best results wait at least 8 hours before recoating or finish coating when transitioning from oil to water. For stain blocking, allow primer to cure overnight before recoating. This product will continue to develop increased adhesion over a full 7 day cure cycle. Normal conditions include a dry surface, access to fresh air flow, moderate humidity, and temperatures above 55 degrees F. Thick application, high humidity or conditions other than normal will cause Safecoat to dry and cure more slowly.

LIMITATIONS: Unlike conventional paints, Safecoat paints are made without formaldehyde preservatives. Do not contaminate. Store in airtight containers. Do not use when ambient or surface temperature is below 50 degrees F. Do not freeze.

HEALTH PRECAUTIONS: As with all coatings and stains, keep container tightly closed and out of the reach of children. Do not take internally. Always use adequate ventilation. Wear a mask when sanding and avoid breathing sanding dust. *If you are chemically sensitive, always test for personal tolerance*.

LIMITED LIABILITY: The great variation between environmental factors, possible surfaces and application techniques, and the lack of control we have over such matters, must affect our policies. Safecoat products are guaranteed not to be defective when applied and used in accordance with instructions. However, liability, whether express or implied, is limited to replacement of product or refund of purchase price and cannot include liability for labor costs or consequential damages. Because of the variety of circumstances affecting each job, it is the user's responsibility to determine the suitability and safety of the product for any particular application. This limited warranty may not be modified or extended by manufacturer's representatives, distributors, or dealers of AFM products. **We particularly recommend that users always test in small inconspicuous areas before application to the entire surface.**

AMERICAN FORMULATING AND MANUFACTURING
3251 Third Avenue, San Diego, CA 92103 • Tel: 619-239-0321 Fax: 619-239-0565

Safecoat®

Safe Seal

Interior

DESCRIPTION: Safecoat Safe Seal is a multi-use, waterbased, low gloss sealer for highly porous surfaces such as particle board, plywood, processed wood and porous concrete. Used primarily to reduce toxic outgassing: in particular, it is highly effective at sealing in formaldehyde outgassing from processed wood such as plywood, particle board and pressed wood. Safecoat Safe Seal is virtually odorless on application and odorless once cured.

USE ON: Porous surfaces such as processed wood products, concrete, wood, new drywall, grout and plaster. If used as a grout sealer, wipe excess off tile with a damp cloth or sponge while still wet. Test surfaces first in inconspicuous areas to be sure product absorbs into surfaces completely. Excellent at controlling formaldehyde emissions of open faced and faced fiberglass batt insulation - simply fog spray surfaces.

Safecoat Safe Seal improves the adhesion and bonding power of adhesives and coatings applied to treated surfaces. Apply a thin coat to the slab and bottom of the tile, for example, before laying adhesive (in this application no cure period is necessary; the adhesive may be applied while the Safe Seal is still tacky).

PRODUCT NUMBER AND CONTAINER SIZE:
31204 (quart), 31104 (gallon) and 31304 (five gallon).

ADVANTAGES / SIGNIFICANT BENEFITS:

- Highly effective at sealing in toxicity of underlying surface.
- Safely used by and for the chemically sensitive.
- Low odor, non-offensive to installer and occupant.
- Fights indoor air pollution, seals in the outgassing from the substrate.
- Low VOC content, meets or exceeds all federal and state air quality regulations, including California.
- Contains no formaldehyde.

APPLICATION: Always have adequate ventilation. Before using, stir Safecoat Safe Seal by gently rolling container to avoid air bubbles. Then apply as is, using a sponge, squeegee or appropriate spray equipment. It is important to apply in very thin coats. Thick coats will overly darken the color of underlying surface. For best results, this product should not be reduced. Use only during low or moderate humidity conditions. Milky appearance, dries clear. Apply only to a completely dry substrate. Correct application will often slightly deepen color of existing surface.

COVERAGE: One gallon of Safecoat Safe Seal covers approximately 350 square feet in one coat depending on surface porosity.

CLEAN-UP: Clean tools and equipment while they are still wet with a solution of ***SafeChoice Super Clean*** and warm water.

DRYING/CURING TIME: Under normal conditions, Safecoat Safe Seal dries to touch in one hour and is re-coatable after 2 hours. Normal conditions include a dry surface, access to fresh air flow, moderate humidity, and temperatures above 55°F. Thick application, high humidity or conditions other than normal will cause Safecoat Safe Seal to dry and cure more slowly.

LIMITATIONS: Safecoat Safe Seal is made without formaldehyde preservatives. Do not contaminate. Store in airtight containers. Do not use when indoor or surface temperature is below 55°F. Substrate to which Safecoat Safe Seal is to be applied must be completely dry.

HEALTH PRECAUTIONS: As with all coatings and sealers, keep container tightly closed and out of the reach of children. Do not take internally. Keep from freezing. Always use adequate ventilation. If you are chemically sensitive, always test for personal tolerance.

LIMITED LIABILITY: The great variation between environmental factors, possible surfaces and application techniques, and the lack of control we have over such matters, must affect our policies. Safecoat products are guaranteed not to be defective when applied and used in accordance with instructions. However, liability, whether express or implied, is limited to replacement of product or refund of purchase price and cannot include liability for labor costs or consequential damages. Because of the variety of circumstances affecting each job, it is the user's responsibility to determine the suitability and safety of the product for any particular application. This limited warranty may not be modified or extended by manufacturer's representatives, distributors, or dealers of AFM products. **We particularly recommend that users always test in small inconspicuous areas before application to the entire surface.**

LEGACY REPORT

NER-572

Reissued April 1, 2006

ICC Evaluation Service, Inc.
www.icc-es.org

Business/Regional Office ■ 5360 Workman Mill Road, Whittier, California 90601 ■ (562) 699-0543
Regional Office ■ 900 Montclair Road, Suite A, Birmingham, Alabama 35213 ■ (205) 599-9800
Regional Office ■ 4051 West Flossmoor Road, Country Club Hills, Illinois 60478 ■ (708) 799-2305

Legacy report on the 2000 *International Building Code*®, the 2000 *International Residential Code*®, the BOCA® National Building Code/1999, the 1999 *Standard Building Code*© and the 1997 *Uniform Building Code*™

DIVISION: 09—FINISHES
Section: 09250—Gypsum Board

REPORT HOLDER:

G-P GYPSUM CORPORATION
2861 MILLER ROAD
DECATUR, GEORGIA 30035
www.gp.com/gypsum

1.0 SUBJECT

Gypsum Tile Backer Board

2.0 PROPERTIES

2.1 Moisture Resistance

2.2 Fire Resistance

3.0 DESCRIPTION

The Dens-Shield® Tile Backer is composed of a water-resistant gypsum core between two fiberglass matte faces. One face is covered with a grey acrylic base coating. Dens-Shield® Tile Backer board has the following physical characteristics:

Thickness:	$^1/_4$ inch (6.4 mm)	$^1/_2$ inch (12.7 mm)	$^5/_8$ inch (15.9 mm)
Width: (nominal)	4 feet (1220 mm)	4 feet (1220 mm)	4 feet (1220 mm)
Length: (standard)	4 feet (1220 mm)	8 feet (2440 mm)	8 feet (2440 mm)

G-P Gypsum Corporation Dens-Shield® Tile Backer is a nominal $^1/_4$, $^1/_2$, or $^5/_8$ in. (6.4, 12.7 or 15.9 mm) thick gypsum board intended for use as a base for application of ceramic or plastic tile in bath, shower, or other high moisture areas. The Dens-Shield® is intended for use as an alternative to water-resistant gypsum backing board meeting the requirements of ASTM C 630. The product is also intended for use as a component of the fire-resistance rated assemblies described in Section 4.1 and 4.2 of this report.

4.0 INSTALLATION

The manufacturer's published installation instructions, subject to the conditions of use listed in this report, shall be strictly adhered to. A copy of these instructions shall be available at all times on the job site during installation.

The Dens-Shield® Tile Backer shall be installed so that ceramic and plastic tile is applied to the grey acrylic coated face of the Dens-Shield® Tile Backer.

Board orientation shall be either parallel with or perpendicular to the wall framing. And in such a manner as to minimize joints. A temporary $^1/_4$ inch (6.4 mm) spacer strip shall be placed around lips of fixture or receptor. Boards shall be pre-cut to required sizes and cut outs made prior to installation. Ends and edges shall be fit closely but not forced together.

Steel or wood framing shall be spaced no greater than 24 inches (610 mm) on center for walls and 16 inches (406 mm) on center for ceilings. Dens-Shield® Tile Backer is attached to wood framing with $1^1/_2$ inch (38 mm) galvanized nails or $1^1/_2$ inch (38 mm) corrosion-resistant Type 'W' screws spaced 6 inches (152 mm) on center. Dens-Shield® Tile Backer is attached to light gauge steel framing with 1 inch (25 mm) Type S corrosion-resistant screws spaced 6 inches (125 mm) on center. Dens-Shield® Tile Backer is attached to heavy gauge steel framing with 1 inch (25 mm) Type S-12 screws spaced 6 inches (125 mm) on center. Fasteners should be driven flush with, and not penetrate into, the coated surface. Remove the $^1/_4$ inch (6.4 mm) spacer strips before applying tile.

Before installing tile, a 2 inch (51 mm) fiberglass tape is applied over the Dens-Shield® Tile Backer joints and angles. The fiberglass tape is embedded with the adhesive used to set the tiles. Drywall joint finishing compounds shall not be used in tub and shower areas covered with tile. Allow the joints to dry before applying the tiles. Openings shall be caulked with an elastomeric sealant to prevent water penetration.

Type I ceramic tile adhesive, mortar, or latex modified mortar shall be used to set the tiles in accordance with the adhesive manufacturer's instructions.

For small areas not to be tiled, and which will not be exposed directly to moisture, joints are permitted to be finished with paper joint tape and G-P Ready Mix joint compound or setting compound in a conventional manner. Flat Trowel (skim coat) joint compound over the entire Dens-Shield® Tile Backer to produce a smooth surface. Surfaces to be painted or papered, shall be primed.

4.1 ONE HOUR FIRE RATED ASSEMBLY

Dens-Shield® tile backer is utilized as a component of a 1 hour fire-resistance rated assembly, when the assembly is constructed as follows:

The wall assembly is composed of a nominal $2^1/_2$ inch (64 mm) metal "C" studs aligned 16 inch on centers, and friction fitted into a $2^1/_2$ inch (64 mm) "U" track. Exposed and unexposed faces are covered with a $^1/_2$ inch (12.7 mm) Georgia Pacific Dens-Shield® Tile Base. The wall shall be insulated with $3^1/_2$ inch (89 mm) thick by 16 inch (406 mm) wide unfaced R-11

fiberglass batts, which are friction fit into the cavity. Boards are fastened with 1 inch (25 mm) Type S screws. Orientation of the board shall be parallel to framing with joints staggered between long dimensioned sides. Fastener spacing shall be 8 inch (203 mm), and $^1/_2$ inch (12.7 mm) from the edge.

4.2 TWO HOUR FIRE RATED ASSEMBLY

Dens-Shield® Tile Backer is utilized as a component of a 2 hour fire-resistance rated assembly, when the assembly is constructed as follows:

The assembly is composed of nominal $2^1/_2$ inch (64 mm) metal "C" studs aligned 24 inches (610 mm) on center, and friction fitted into a $2^1/_2$ inch (64 mm) "U" track. Exposed and unexposed faces shall be covered with a $^1/_2$ inch (12.7 mm) Georgia-Pacific Fireguard Type C as the base layer. The face layer material is a single layer of Georgia-Pacific $^1/_2$ inch (12.7 mm) Dens-Shield® Tile Base on both the exposed and unexposed faces. Orientation of both face layer and base layer are parallel to framing with joints staggered between long dimensioned sides. Attachment of assembly is with $1^5/_8$ inch (41 mm) Type S screws.

5.0 IDENTIFICATION

All packages containing Dens-Shield® Tile Backer as described in this report shall be identified by a label bearing the manufacturer's name and address, the NES logo, and this report number for field identification.

6.0 EVIDENCE SUBMITTED

6.1 Manufacturer's descriptive literature and installation instructions dated September, 1998.

6.2 Timber Products Inspection, Project No. 86-18, dated October 20, 1986, containing reports of physical properties testing in accordance with ASTM C 473. Except for the Nail-Pull Resistance, the Dens-Shield® Tile Backer met or exceeded the specific values given in ASTM C 630. The reported nail-pull resistance was 72 lbf versus the minimum nail-pull resistance of 80 lbf.

6.3 CTC-GEOTEK, Incorporated Project No. 937017- Test #1, dated November 15, 1993, containing results of testing in accordance with ASTM C 627.

6.4 CTC-GEOTEK, Incorporated Project No. 937017- Test #2, dated November 16, 1993, containing results of testing in accordance with ASTM C 627.

6.5 CTC-GEOTEK, Incorporated Project No. 937017- Test #3, dated November 17, 1993, containing results of testing in accordance with ASTM C 627.

6.6 CTC-GEOTEK, Incorporated Project No. 937017- Test #4, dated November 17, 1993, containing results of testing in accordance with ASTM C 627.

6.7 CTC-GEOTEK, Incorporated Project No. 937017- Test #5, dated November 16, 1993, containing results of testing in accordance with ASTM C 627.

6.8 Commercial Testing Company, Report No. 60712, Test No. 1897-1655, dated January 11, 1988, con-taining results of testing in accordance with ASTM E 119.

6.9 Commercial Testing Company, Report No. 60604, Test No. 1894-1530, dated January 15, 1988, con-taining results of testing in accordance with ASTM E 119.

6.10 Timber Products Inspection, Project No. 86-18, dated November 6, 1986, containing results of moisture vapor transmission testing in accordance with ASTM E 96.

6.11 Timber Products Inspection, Project No. 86-18, dated February 4, 1987, containing results of shower test on ceiling application as a supplement to ASTM C 630.

7.0 CONDITIONS OF USE

The ICC-ES Subcommittee for the National Evaluation Service finds that the Dens-Shield® Tile Backer as described in this report complies with the requirements specified in the 2000 *International Building Code®*, the 2000 *International Residential Code®*, the BOCA® *National Building Code*/1999, the 1999 *Standard Building Code®*, and the 1997 *Uniform Building Code™*, subject to the following conditions:

7.1 Dens-Shield® Tile Backer shall be installed in accordance with the manufacturer's instructions, subject to the conditions of this report.

7.2 Dens-Shield® Tile Backer when stored outside, shall be covered and stacked off the ground. The maximum time the Dens-Shield® Tile Backer is allowed to be outside is one month.

7.3 The fastener spacing for installation of Dens-Shield® Tile Backer shall be given in Table 1 of this report, or, if applicable, as stated in Section 4.1 and 4.2 of this report.

7.4 Dens-Shield® Tile Backer is limited to use on walls, countertops, floors, and ceilings in bath and shower areas as a backer board for ceramic or plastic tile.

7.5 Dens-Shield® Tile Backer used as a component in a structural assembly is outside the scope of this report.

7.6 This report is subject to periodic re-examination. For information on the current status of this report, contact the ICC-ES.

TABLE 1—FASTENER SPACING* – FOR $^1/_2$ INCH DENS-SHIELD® TILE BACKER

FASTENER TYPE	LOCATION	SPACING
Single Nail Single Nail	Ceilings Walls	6 inches o.c. 7 inches o.c.
Screws Screws Screws	Ceilings Walls (framing members 16 inches o.c.) Walls (framing members 24 inches o.c.)	10 inches o.c. 14 inches o.c. 10 inches o.c.
Double Nailing Double Nailing	Walls Ceilings	10 inches between double nails in field / 7 inches o.c. at edge 10 inches between double nails in field / 7 inches o.c. at edge

Notes to Table 1: 1 inch = 25.4mm

* Fastener spacing is based on maximum spacing of gypsum board in accordance with:
Section 2505 of the 2000 *International Building Code®*,
Table R702.3.5 of the 2000 *International Residential Code®*,
Table 2503.3 of the BOCA® *National Building Code*/1999,
Table 2506 of the 1999 *Standard Building Code©*, and Tables 25-G and 25-H of the 1997 *Uniform Building Code™*.

CU
146

Thompson's® Water Seal® Clear Multi-Surface Waterproofer

PRINT | CLOSE WINDOW

Key Features

- Prevents water damage.
- Beads & waterproofs.
- Allows wood to gray naturally.
- Exceeds all federal waterproofing standards for wood, concrete and brick:

	•	Wood — exceeds industry standard ASTM D-4446 for waterproofing wood.
	•	Concrete — exceeds federal specification TT-C-555B for resistance to wind-driven rain.
	•	Brick — exceeds federal specification SS-W-110C for water repellency on brick.

- Use on: decks & fences, brick patios, concrete driveways, exterior surfaces.
- Use when mildew/biological factors are *not* a problem.

Before You Begin

- Allow 30 days before applying on new pressure treated lumber.
- Be sure that both surface and air temperature are above 40° F during application and for 48 hours after application. Do not apply product if rain is forecasted within 24 hours of application.
- Perform the *splash test*. Sprinkle water on various sections of surface to be sealed. If water absorbs and darkens color of substrate within five seconds, surface is porous and considered ready to be treated. If water beads up or otherwise sits on top of surface, then surface does not need protection at this time.
- Certain surfaces, including some stucco and stabilized adobe may "bleed" in the presence of solvents, thereby resulting in discoloration. Test in an inconspicuous place before treating the entire surface.
- Cover plants and shrubs. Move all objects that could come in contact with overspray. Overspray of product onto glass should be removed immediately with paint thinner or mineral spirits.
- Do not use on asphalt, plastic, natural rubber or fabric, in below grade application where water pressure is a problem, or on painted or recently stained surfaces.
- DO NOT USE AS AN ADDITIVE TO PAINT.

Surface Preparation

- Surfaces and substrates must be free of all mildew, dust, dirt, oil, soot, grease and other contaminants.
- Surfaces must be thoroughly cleaned prior to application with a Thompson's® Water Seal™ deck or concrete cleaner applied according to label directions and cautions. Always allow the surface to dry thoroughly (minimum of 2 days for wood, 3 or more days for concrete or masonry) before application.
- Concrete that has a smooth, flat finish must be opened to allow for proper penetration. This should be done by using a concrete etch product. Allow concrete to dry a minimum of 72 hours after etching before applying a waterproofer.
- If surface is damp or wet from cleaning or weather, always allow the surface to dry thoroughly (a minimum of 48 hours) before application.

Application

- Do not mix with other waterproofing products; variations in the final appearance may result.
- Do not thin.
- Concrete/Stucco must be completely cured (minimum of thirty days) and dry.
- A small trial patch should be tried before application over the entire surface.
- Only one light coat is necessary in most applications.
- Apply by brush, roller, dipping, or sprayer. A garden "pump-up" style sprayer is the simplest method. If puddling of product occurs, remove within 15 minutes by redistributing to dry areas or wiping off.

CU
146

- Use only with adequate ventilation.
- Oiliness and tackiness will result if over-applied or applied to wet or damp surface, or if overnight temperature falls below 40° F within 48 hours of application.

Drying Time

- Allow at least 48 hours to dry; however drying time will vary depending on the substrate, temperature, and humidity. When completely dry, do *splash test* to determine if second coat is necessary.
- Allow 45 days drying time before applying *latex paint* over Thompson's® Water Seal® Clear Multi-Surface Waterproofer.
- Allow a minimum of 1 week drying time before applying *oil-based* paint over Thompson's® Water Seal® Clear Multi-Surface Waterproofer.
- Length of protection will vary depending on environment. Perform the *splash test* once a year to see whether reapplication is necessary. Vertical and horizontal surfaces will experience color changes at different rates.

Clean Up

- Clean brushes and equipment with mineral spirits, then rinse with clean water.

Coverage Guidelines

- Actual coverage will vary considerably due to porosity of surface materials.

Material	**(approximate coverage sq. ft./gal.)**
Brick	275
Concrete	330
Smooth Concrete Block	50
*Clay Tile & Quarry Tile	400
Stucco	300
*Slate - Masonite	400
Wood: Rough Sawn	125
Wood: Smooth Finish	225
Plywood	150
Wood Shingles	100

*Wipe surface dry after 10-15 minutes.

DensShield®
Tile Backer

CU
148

Georgia-Pacific Gypsum

Georgia-Pacific Gypsum Sustainable Materials Data Sheet

(See MSDS for additional information)

SECTION 1 Product and Company Identification

Product Name: DensShield® Backer Board. Performance qualities of this product based upon material composition are obtained by referencing ASTM C 1178 and applicable sections of ASTM C 630.

Product Use: Glass mat facers, moisture resistant gypsum sheathing board with a primed positive side surface.

Manufactured by:

Georgia-Pacific Gypsum LLC
133 Peachtree Street
Atlanta, GA 30303
(800) 225-6119 (Technical Information)
(404) 652-5119 (MSDS Request)

Georgia-Pacific Canada, Inc.
Allanburg Road
Thorold, Ontario L2V 3ZB, Canada
(800) 225-6119 (Technical Information)
(404) 652-5119 (MSDS Request)

SECTION 2 Recycled Content *(Percentages are by Weight and Vary by Location) (*LEED Recycled Content Credit 4.1 and 4.2)*

Manufacturing Location	Total Recycled Content	Pre Consumer Recycled Content	Post Consumer Recycled Content
Acme, TX	0%	0%	0%
Brunswick, GA	0%	0%	0%
Camden, NJ	3%	3%	0%
Ft. Dodge, IA	0%	0%	0%

Plants are being added on an on-going basis. Please call the technical information line to determine if a closer plant has been brought on-line.

SECTION 3 Local/Regional Materials *(*LEED Local/Regional Materials Credits 5.1 and 5.2)*

Please determine the distance in statute miles to your project site from the closest DensShield manufacturing location. You may use the following Website to determine the distance to your job-site (not a GP Website): **http://www.indo.com/distance/**

Manufacturing Location	Extraction Location
Acme, TX	Acme, TX
Brunswick, GA	Port Hawksbury, Nova Scotia
Camden, NJ	Port Hawksbury, Nova Scotia
Ft. Dodge, IA	Ft. Dodge, IA

SECTION 4 Product Resists the Development and Spread of Indoor Contaminants *(*LEED Innovation in Design Process Credit)*

When tested as manufactured, product resists growth of mold pursuant to the test method ASTM D 3273 and may qualify for a LEED Innovation Credit based upon the environmental mitigation of mold and mildew related to Indoor Air Quality (IAQ). Additionally, in fire-rated assemblies, product is a Type X product according to ASTM E 119 and ASTM C 1177.

continued on back

CU
148

CU
148

SECTION 4 Product Resists the Development and Spread of Indoor Contaminants

CU 149

*(*LEED Innovation in Design Process Credit) (continued from front)*

The "Construction IAQ Management Plan" (Credit 3) uses the "EPA Protocol for Environmental Requirements, Baseline IAQ and Materials for Research Triangle Park Campus, Section 01445" (www.epa.gov/rtp/new-bldg/environmental/s_01445.htm) as one of its reference standards and incorporates a measurement for airborne Mold & Mildew, which includes:

1. **"Compliance Indoor air quality shall conform to the following standards and limits…"**
2. **"Airborne Mold and Mildew: Simultaneous indoor and outdoor readings."**

This Specification section was a part of the construction documents for the EPA's Research & Administration Facility at Research Triangle Park. The section addresses baseline indoor air quality testing and materials testing.

One of the five areas covered to enhance IAQ performance is through "Source Control" of materials that could be a potential hindrance to passing the testing phase of the aforementioned IAQ LEED Reference Standard. Specifying products that score well on the ASTM D 3273 Mold Test may provide an effective method for enhancing IAQ.

**All LEED rating point references are suggested applications of Dens™ to the LEED rating system. LEED applicants should use their own objective determinations of product attributes for LEED certification purposes.*

Georgia-Pacific Gypsum

SALES INFORMATION AND ORDER PLACEMENT

U.S.A. Midwest: **1-800-876-4746** West: **1-800-824-7503**
South: **1-800-327-2344** Northeast: **1-800-947-4497**

CANADA Canada Toll Free: **1-800-387-6823**
Quebec Toll Free: **1-800-361-0486**

TECHNICAL INFORMATION

Georgia-Pacific Gypsum Technical Hotline
U.S.A. and Canada: **1-800-225-6119**
Mon.-Fri., 8 a.m.-5 p.m. ET www.gpgypsum.com

Some of our products have been certified by Scientific Certification Systems (SCS). SCS is an internationally recognized third-party evaluation, testing and certification organization. Its program spans a wide cross-section of the economy, including manufacturing and retailing, consumer products, the energy industry, and the home improvement and construction sectors. For details on specific Georgia-Pacific Gypsum products and plants, please contact our Technical Hotline: 800-225-6119.

TRADEMARKS The GEORGIA-PACIFIC logo and all trademarks are owned by or licensed to Georgia-Pacific Gypsum LLC.

UPDATES AND CURRENT INFORMATION The information in this document may change without notice. Visit our Web site at www.gpgypsum.com for updates and current information.

LIMITATION OF REMEDIES AND DAMAGES Unless otherwise stated in our written limited warranty for this product, our sole liability for any product claim shall be limited to reimbursement of the cost of repair or replacement of the affected product, up to a maximum amount of two times the original purchase price for the affected product. We shall not be responsible under any circumstances for lost profits, damage to a structure or its contents, or indirect, incidental, special or consequential damages. Claims shall be deemed waived if they are not submitted to us in writing within ten days after discovery.

SAFETY CAUTION: This product contains fiberglass. Fibers and dust may be released from this product during normal handling and may result in skin, eye and respiratory irritation. Avoid breathing dust and contact with the skin and eyes.

Follow these standard work practices: Wear a loose-fitting, long-sleeved shirt and long pants, protective gloves and eye protection (goggles or safety glasses with side shields). Wear a dust mask when sanding. Additional protection may be needed when very dusty. Do not use a power saw. For Material Safety Data Sheet or additional information, call 1-800-225-6119 or visit our Web site.

CU 149

CU 149

GE Structured Products

LEXAN® 9600 Sheet

Product Data Sheet INDUSTRIAL

DESCRIPTION

LEXAN® 9600 sheet offers improved flammability characteristics than conventional LEXAN polycarbonate sheet. It is formulated to meet the standards of UL Bulletin, Class I. (Certain colors are limited to Class II use.) Developed to meet industry flammability codes, LEXAN 9600 sheet is widely used in power tools, electrical appliances, communications equipment, business machines, safety equipment and aircraft components.

The improved flammability and slightly higher (5 to 10 degrees) heat deflection temperature of LEXAN 9600 sheet are accompanied by essentially the same physical, electrical, chemical and fabricating properties exhibited by standard LEXAN sheet.

TYPICAL PROPERTY VALUES*

Property	Test Method	Units	Value
PHYSICAL			
Specific Gravity	ASTM D792	—	1.25
Water Absorption, Equilibrium, 24 Hrs	ASTM D570	%	0.20
Light Transmission (avg.), .125" thickness	ASTM D1003	%	85
MECHANICAL			
Tensile Strength	ASTM D638	psi	
@ Yield			9,500
Ultimate			9,000
Elongation	ASTM D638	%	95
Tensile Modulus	ASTM D638	psi	235,000
Flexural Strength	ASTM D790	psi	13,500
Flexural Modulus	ASTM D790	psi	370,000
Compressive Strength	ASTM D695	psi	12,500
Dynatup Impact Strength, 1/2" dia. dart, (gauge dependant)***, @ 73°F	ASTM D3783	ft-lbs	50
Gardner Impact Strength, round tup (gauge dependent)***, @ 73°F	ASTM D3029	in-lbs	>320
Izod Impact Strength, (gauge dependant)***	ASTM D256A	ft-lbs/in	
Notched @ 73°F			2.4
Unnotched @ 73°F			NB
THERMAL			
Coefficient of Thermal Expansion	ASTM D696	in/in/°F	3.75×10^{-5}
Heat Deflection Temperature	ASTM D648	°F	
@ 264 psi			280
FLAMMABILITY			
UL Flammability**	UL 94	—	V-0 (90 mils and above) V-2 (34–89 mils)
FAA Flammability @ 40 to 125 mils	FAR 25.853	—	Passes A&B
ATS 1000 @ 40 to 125 mils	—	—	Pass

**This rating is not intended to reflect hazards presented by this or any other material under actual fire conditions.

***Reported values baesd on .125" gauge thickness.

®Registered Trademark of General Electric Company

**These are typical properties and are not intended for specification purposes. If minimum certifiable properties are required, please contact your local GE Structured Products representative or the GE Structured Products Quality Services Department.*

For more information call: (800) 451-3147.

GE Structured Products

General Electric Company
One Plastics Avenue
Pittsfield, MA 01201

www.structuredproducts.ge.com

® Registered Trademark of General Electric Company

* Not connected with the English company of similar name.

SPD-4302C (4/98) LMC

Architecture design

In good architectural planning elements of the environment in which the structure will be placed must be taken into account. In outstanding architectural planning, the environment becomes an integral part of the structure.

Polygal sheeting harnesses nature to create the interior atmosphere by enlisting nature's qualities for the creative process. Realizing that the creative process in building depends on the ability to adapt the materials for the design concept, Polygal offers architects a raw material that is like putty in their hands - almost any idea, however crazy it may be, can be implemented.

The unique advantage of Polygal sheeting allows the architect to create a sense of openness and flow while maintaining stability and strength for years to come.
These sheets come in a wide range of colors and are between 6 mm and 16 mm thick. They are flexible with different levels of transparency, provide insulation, withstand harsh weather conditions and are easily installed.

Polygal sheeting provides solutions in a number of areas such as transportation projects, public and commercial buildings, open passageways, pools, verandahs, interior design elements, display windows, display areas, exhibitions, signs, etc.

Central Bus Station
10 mm ICE Polygal Sheets HCP connecting system

Transportation

Bus Stop

Bus Stop, Panama
8 mm green Polygal Sheets

Railway Station, Rehovot, Israel
8 mm bronze Polygal Sheets

Swimming pool
10 mm ICE Polygal Sheets with Antifog coating

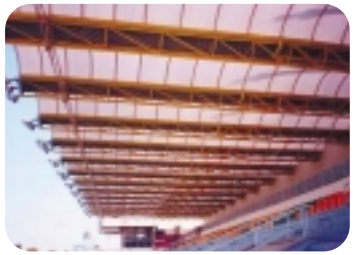

Hippodrome, Ciprus

Swimming pool, Tel-Aviv, Israel
8 mm ICE Polygal Sheets

Sport

Stadium, Moscow, Russia
16 mm Clear Polygal Sheets, Aluminium glazing system

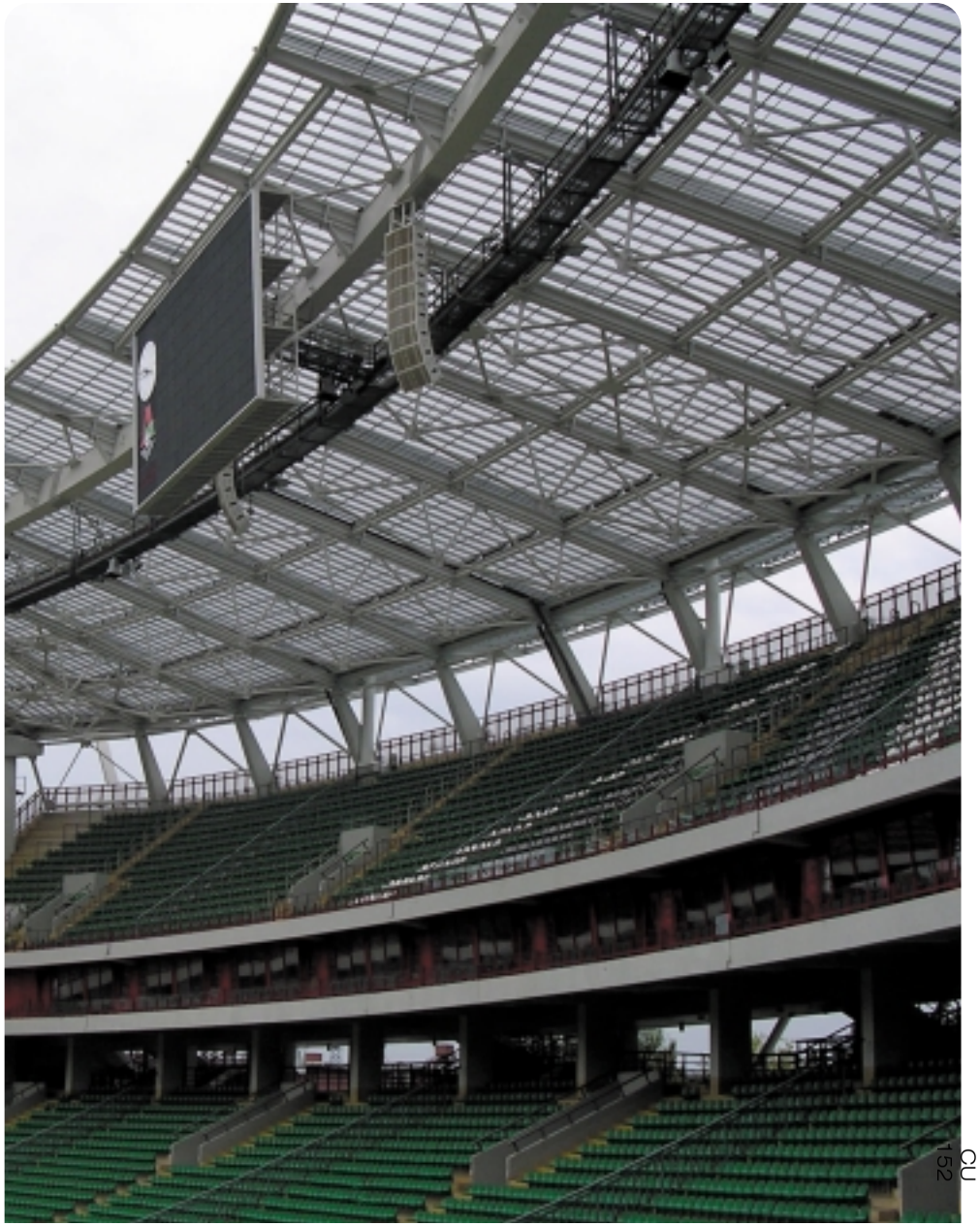

CU
152

Public

Piloto University, Colombia
10 mm Clear Polygal Sheets

Central Market, South Korea

Fish Market, Tiberias, Israel

Muticentro Mall, Panama
8 mm ICE Polygal Sheets, HCP connection system

Open Market, South Korea
8 mm PolyShade Sheets, 6-16 Aluminium glazing system

Pereira, Colombia

Subazar Mall, Bogota, Colombia
8 mm Clear Polygal Sheets

Interior design

The unique qualities of nature abound throughout the environment. Visually, nature provides us with a never-ending source of hues and shades, depth of color, shape, and the play of light and shadow. Nature also has a spiritual effect as it creates a special atmosphere, its harmonious flow conveying a sense of openness. Polygal sheets for interior design allow us to bring some of natures qualities into the office, store or home. Polygal sheeting creates a sense of aesthetic space together with strength and stability. It offers creative freedom with almost unlimited design options. The sheeting is available in a wide range of colors and levels of transparency, and ranges in thickness from 6 mm to 16 mm. The sheets are flexible with different levels of transparency. They are heat resistant, easily installed and can be used in a variety of applications such as partitions, ceilings. They can also be incorporated into furniture, light panels, display windows, display areas, exhibitions, signs, etc.

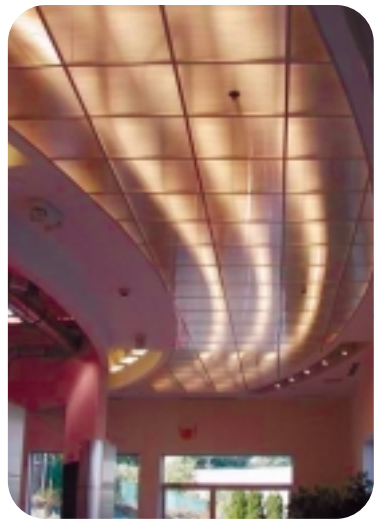

CUSD2007

lighting

COMPETITION MODULE
SPECIFICATION SHEET
INDIVIDUAL FIXTURE INFORMATION

COMPLETE HOUSE
SPECIFICATION SHEET
INDIVIDUAL FIXTURE INFORMATION

2007 CU Solar Decathlon - Lighting Fixture & Control Schedule

TYPE	QUANTITY	MANUFACTURER NAME	MANUFACTURER CATALOG NO.	# OF LAMPS	WATTS/LAMP	LAMP TYPE	TOTAL WATTS	MOUNTING	RECESS DEPTH	VOLTAGE	LOCATION	IMAGE
FIXTURES												
D-A	7	ADREE	DL19MA A30R-120	1	10	10W MR11 / 2-PIN G4	110	RECESSED	4.25"	12	KITCHEN	
D-B	4		DL19BK A30R-120									
F	1	BEGA	L8201/537	2	27	27W TWIN / 4-PIN 2G11	54	WALL	N/A	120	BATHROOM VANITY	
G	2	BEGA	L7162	1	18	18W QUAD / 4-PIN G24q-2	36	WALL	N/A	120	BEDROOM	
H-3	8	PEGASUS LIGHTING	PLED-DL-WW-3	3	0.77	LED	18.48		N/A	120	WATER TANKS / FAT WALL / GARAGE / DECK	
H-9	8		PLED-DL-WW-9	9			55.44					
H-15	3		PLED-DL-WW-15	15			34.65					
H-18	1		PLED-DL-WW-18	18			13.86					
I	2	SPLASH LIGHT - BRUCK	LEDRA PLUG-IN FLEX	1	3	LED	6	BED HEADBOARD	N/A	120	BEDROOM	
J	2	OLO INSIDE	SECTO SMALL PENDANT - BIRCH	1	10	10W CFL / E26	20	PENDANT	N/A	120	KITCHEN BAR	
K	1	SPLASH LIGHT - FLOS	ARIETTE 1	4	10	10W CFL / E26	40	WALL	N/A	120	LIVING ROOM SOUTH WALL	
L	1	SPLASH LIGHT - ET-2	ORBIT E20013-11	1	40	XENON JC	40	DESK	N/A	120	OFFICE	
M-2	3	CORELITE	CS-SN-1-14T5-1C-120-2'	1	14	F14T5/3000K	42	SURFACE	N/A	120	KITCHEN	
M-4	3	CORELITE	CS-SN-1-28T5-1C-120-4'	1	28	F28T5/3000K	84	SURFACE	N/A	120	KITCHEN	
N-8	1	CORELITE	IW-SP-1-28T5-1D(0-10VOLT)-120-SU-WA-8'-EB	5	28	F28T5/3000K	140	WALL	N/A	120	LIVING ROOM	
N-20	1	CORELITE	IW-SP-1-28T5-1D(0-10VOLT)-120-SU-WA-20'-EB	5	28	F28T5/3000K	140	WALL	N/A	120	LIVING ROOM	
P	2	BEGA	2815P	1	9	9W / 2-PIN G23-2	18	RECESSED	4-3/4"	120	ENTRY	
V	2	GRAINGER - LUMAPRO	3RB17	1	23	23W CFL / E26	46	SURFACE	N/A	120	GARAGE	
DX	15	BRUCK	UL D	1	0.2	0.2W LED	3	RECESSED	2"	120	DECK	
EX	3	BEGA	2955P	2	13	13W / G24q-1	78	EXTERIOR WALL	N/A	120	EXTERIOR DOOR	
PX	4	BEGA	2036P	1	9	9W / 2-PIN G23	36	RECESSED	N/A	120	DECK PLANTERS	
LIGHTING CONTROLS												
LPC	2	WATTSTOPPER	LS-301	N/A	0.72	N/A	0.72	WALL	N/A	24	LIVING ROOM / BEDROOM	
LPP	2	WATTSTOPPER	B120E-P	N/A	N/A	N/A	0	JUNCTION BOX	N/A	24	LIVING ROOM / BEDROOM	
LR1	1	WATTSTOPPER	LSR-301-S	N/A	N/A	N/A	0	WALL	N/A	24	LIVING ROOM	
LR2	1	WATTSTOPPER	LSR-301-P	N/A	N/A	N/A	0	WALL	N/A	24	LIVING ROOM	
LD	1	WATTSTOPPER	MCD267-W	N/A	N/A	N/A	0	WALL	N/A	24	KITCHEN	

CU 156

LOW VOLTAGE ROUGH-INS:
A30R-120, A30R-277

NON-TYPE IC ROUGH-IN FOR REMODELING APPLICATIONS

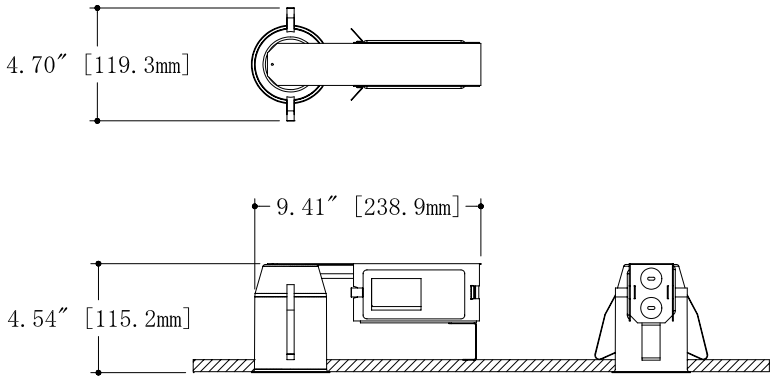

SPECIFICATIONS:

1. **Rough-in Body:** Die formed, galvanized steel
2. **Junction Box:** Galvanized steel, with ½ IP pry-out knock-outs. Rated for thru-branch wiring, 2-in/2-out, No. 12 AWG wire, rated for 90C. Accessible from below ceiling.
3. **Transformer:** Electromagnetic, 12 volt output, class H Insulation.
4. **Thermal Protection:** Integral, Protects from over-lamping and abnormal applications.
5. **Trim Housing: Drawn** aluminum with mounting brackets. 1 1/4" thick ceiling maximum.
6. **Compliances:** UL and cUL Listed for damp locations and for safe use in ceilings without insulation, or where insulation is kept 3" away on all surfaces.
7. **Socket:** Bi-Pin Ceramic, Listed component, Integral wiring terminations.

See selected trim specification sheets for lamp type and maximum wattage ratings.

Ordering Information:

Catalog No.	Cutout Size	Input Voltage	Trims
A30R-120	3"	120 V AC	DL19, DL22, DL23, DL24, DL25, DL43 ASX1, ASX3, ASX5, ASX6, ASX7
A30R-277	3"	277 V AC	DL19, DL22, DL23, DL24, DL25,DL43 ASX1, ASX3, ASX5, ASX6, ASX7

ARDEE LIGHTING INC.
www.ardeelighting.com
A Subsidiary of JJI Lighting Group, Inc.
E-mail: ardee@jjishelby.com
PO Box 1769, 639 Washburn Switch Rd.
Shelby, NC 28151
(704) 482-2811 ¦ Fax (800) 275-1544

Varianti Series
MR11 - DL19 Trim

TYPE: **D-A**

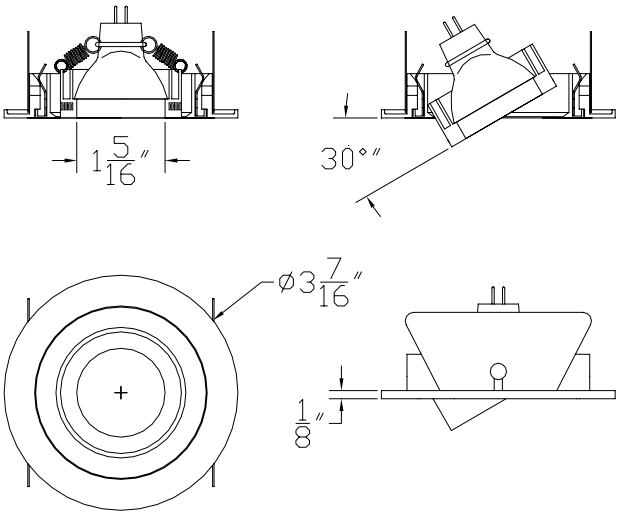

SPECIFICATIONS:

Low voltage adjustable recessed downlight with nominal 3 ½" diameter trim and 1 ¼" diameter aperture.

Trim
- Precision machined, triple ring construction.
- Aluminum base material for painted finishes: White, Black, Metallic Silver.
- Brass base material for plated finishes: Polished Brass, Chrome, Matte Aluminum, Black Nickel.
- Rotating center ring pivots 30 degrees in either direction, capable of utilizing two (2) media accessories in conjunction with one MR11.
- Snap-in / Pull-out center ring assembly provides convenient servicing.

Electrical:
- Socket assembly (ceramic socket and wire lead) snaps directly to lamp pins. Socket assembly supplied with pre-wired rough-in housing. Rough-in ordered separately

Lamping:
- Enclosed MR11, 12volt or open MR11, 12 volt lamp with protective glass lens. 35 watt maximum for non-IC rated rough-in and 35 watt maximum for IC rated rough-in. Lamp provided by others.

Compliances:
- UL and cUL Listed when specified with appropriate A30 Series Rough-in housing. Suitable for use in damp and wet locations.

Ordering Information

Part Number	Color: Plated Finish
DL19WH	White
DL19BK	Black
DL19MS	Metallic Silver

Part Number	Color: Plated Finish
DL19PB	Polished Brass
DL19PC	Polished Chrome
DL19MA	Matte Aluminum
DL19BN	Black Nickel

Use with A30 Series rough-in

Ardee Lighting reserves the right to change product specifications without prior notification.

Ardee Lighting
PO Box 1769 · 639 Washburn Switch Rd · Shelby · NC 28151
T 704. 482.2811 F 800.275.1544 E ardee@jjishelby,com
www.ardeelighting.com

Varianti Series
MR11 - DL19 Trim

TYPE: **D-B**

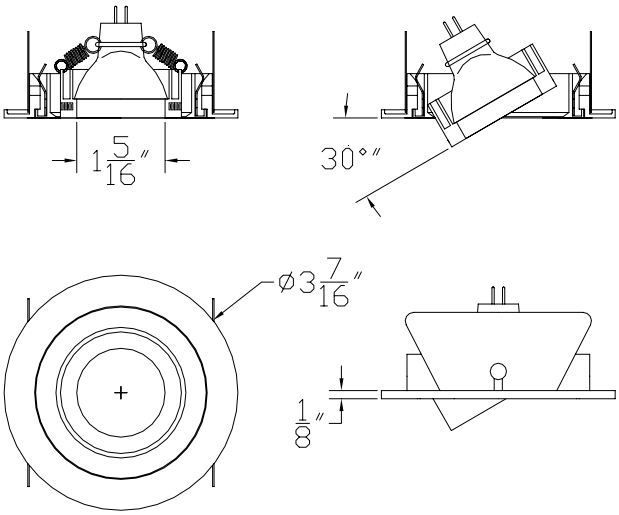

SPECIFICATIONS:

Low voltage adjustable recessed downlight with nominal 3 ½" diameter trim and 1 ¼" diameter aperture.

Trim
- Precision machined, triple ring construction.
- Aluminum base material for painted finishes: White, Black, Metallic Silver.
- Brass base material for plated finishes: Polished Brass, Chrome, Matte Aluminum, Black Nickel.
- Rotating center ring pivots 30 degrees in either direction, capable of utilizing two (2) media accessories in conjunction with one MR11.
- Snap-in / Pull-out center ring assembly provides convenient servicing.

Electrical:
- Socket assembly (ceramic socket and wire lead) snaps directly to lamp pins. Socket assembly supplied with pre-wired rough-in housing. Rough-in ordered separately

Lamping:
- Enclosed MR11, 12volt or open MR11, 12 volt lamp with protective glass lens. 35 watt maximum for non-IC rated rough-in and 35 watt maximum for IC rated rough-in. Lamp provided by others.

Compliances:
- UL and cUL Listed when specified with appropriate A30 Series Rough-in housing. Suitable for use in damp and wet locations.

Ordering Information

Part Number	Color: Plated Finish
DL19WH	White
DL19BK	Black
DL19MS	Metallic Silver

Part Number	Color: Plated Finish
DL19PB	Polished Brass
DL19PC	Polished Chrome
DL19MA	Matte Aluminum
DL19BN	Black Nickel

Use with A30 Series rough-in

Ardee Lighting reserves the right to change product specifications without prior notification.

Ardee Lighting
PO Box 1769 · 639 Washburn Switch Rd · Shelby · NC 28151
T 704. 482.2811 F 800.275.1544 E ardee@jjishelby,com
www.ardeelighting.com

LIMBURG Collection

Type: **F**
LIMBURG Product #:
Project:
Voltage:

Luminaire mounts to the wall over a custom BEGA 537 recessed box. This box can be shipped ahead of the luminaire.

Wall luminaires · Linear

Material: Housing constructed of polished brass with a nickel plating to simulate a stainless steel finish (L8203/537), polished brass with a chrome plating (L8201/537), or brass with a painted white RAL 9010 finish (L8199/537). Wall bracket constructed of extruded aluminum with a nickel plating to simulate a stainless steel finish (L8203/537), with a chrome plating (L8201/537), or with a painted white RAL 9010 finish (L8199/537).

Glass: Two, hand blown, three-ply opal glass elements with screw neck.

Electrical: Two (2) 27W twin 4-pin 2G11 base compact fluorescent lamps (by others). 2G11 4-pin sockets and electronic ballast, 120V or 277V – specify.

Installation: Mounts directly to the wall over a custom BEGA 537 recessed box. This box can be shipped ahead of the luminaire.

U.L. listed, suitable for damp locations.

Please note: A space of approximately 13" must be provided above or at the side of the luminaire to allow relamping

s/steel finish	chrome	white	lamp	lumen	A	B	C
L8203/537	**L8201/537**	**L8199/537**	2 27 W CF twin-4p	3600	36¼	3⅛	4⅜

BEGA/US
1000 BEGA Way, Carpinteria, CA 93013 (805)684-0533 FAX (805)566-9474

Revised 4/06

LIMBURG Collection

Type: **G**
LIMBURG Product #:
Project:
Voltage:

The luminaires should be installed either vertically or horizontally over a single gang switch box (by others).

Wall luminaires · direct/indirect

Material: Housing constructed of stainless steel (L7610) with a #4 brushed finish, polished brass with chrome (L7162) plating, polished brass (L7161), or aluminum with a painted white RAL 9010 (L7160) finish. Backplate constructed of white painted tin plate.

Glass: Hand blown, three-ply opal glass.

Electrical: One (1) 18W quad 4-pin G24q-2 base compact fluorescent lamp (by others). G24q-2 4-pin socket and electronic ballast, 120V or 277V – specify.

Installation: Mounts directly to the wall either vertically or horizontally over a single gang switch box (by others).

Optional: Consult factory to be supplied with punched numbers or letters, as indication or location luminaires.

U.L. listed, suitable for damp locations.

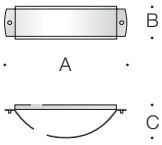

s/steel	chrome	brass	white	lamp		lumen	A	B	C
L7610	**L7162**	**L7161**	**L7160**	1	18 W CF quad-4p	1250	10¼	3⅛	4½

BEGA/US
1000 BEGA Way, Carpinteria, CA 93013 (805)684-0533 FAX (805)566-9474

Revised 4/06

Cool White LED Rope Light

Cool White LED Rope Light Pegasus Associates Lighting has 7 lengths of 120-volt LED rope light using cool white LEDs.

More Images (Pop-Up)
Cool White LED Rope Light

DESCRIPTION

- **Many Uses**: ideal for lighting building outlines, amusement themes, store window displays, holiday light sculptures, cove lighting, toe space lighting, museum lighting, architectural details, over cabinet lighting, step lights, bookshelves, deck railings, gazebos, trade show lighting, bars, and night clubs

ROPE

- **7 Lengths**: 3ft, 6ft. 9ft, 15ft, 18ft, 30ft, 75ft
- **Diameter**: rope light is 0.50in in diameter; threaded coupler used to connect two pieces of rope light together or connect an end cap to a piece of rope is 1-1/8in in diameter
- **Brighter than Incandescent**: the LED rope light provides 6.4 lumens/ft
- **Very Flexible**
- **Very Low Heat**: LEDs generate very little heat
- **Easy to Install**: easy to install with mounting clips. Several clear, U-shaped, plastic mounting clips with 2 screws each are included with each kit.
- **Field Cuttability**: rope light is ***no longer field cuttable*** due to the most recent UL 2388 standards. However, to make longer runs several lengths of rope light may be easily connected using molded male and female ends that are held together with a threaded coupler, all of which are supplied. (See Linkable comments below.)

LEDs

- **Cool White LEDs**: cool white LEDs, with a color temperature of about 6000K, are used (very slightly bluish in color compared to warm white LEDs but very definitely white when compared to blue LEDs). An LED (light emitting diode) is a solid state electronic component that emits light when electricity is passed through it.
- **Excellent Lamp Life**: rated life of each LED is 60,000 hours on average while the miniature incandescent light bulbs used in the incandescent clear rope light each have a rated life of 25,000 hours on average. Because the LEDs are completely encased in the solid plastic rope, a very dim LED cannot be replaced at a later time.
- **Lamp Spacing**: 1.0 inch apart

ELECTRICAL FEATURES

- **Line Voltage**: 120 volts; ***no*** transformer is required
- **Cord & Plug**: 5ft SJT power cord & 2-prong, polarized, fused plug
- **Very Energy Efficient**: only consumes 0.77 watts per foot
- **Linkable**: several lengths may be easily linked together using the threaded couplers that are supplied with each kit up to a total length of 240 feet. For example, one 18-foot length of rope light and one 30-foot length of rope light may be easily put together to form a 48-foot length of rope light, two 30-foot lengths may be combined to create a 60-foot length of rope light, and so on. However, the cool white LED rope light kits may ***not*** be linked to the warm white LED rope light kits or the incandescent rope light kits.
- **Not Dimmable**: this LED cool white rope light is ***not*** dimmable
- **Indoor and Outdoor Use**: UL listed for indoor ***and*** outdoor use
- **Not Under Water**: should ***not*** be used under water
- **UL 2388 Listed**: UL 2388 contains the most recent stringent UL standards and,

Type: I

CU
163

BRUCK.

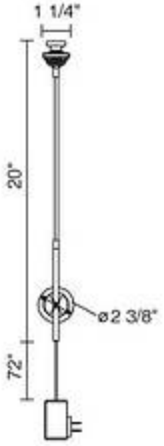

LEDRA™ PLUG-IN FLEX

Description:
The Ledra Plug-In Flex is a flexible hose display fixture. The small size, long life, lack of UV, and cool beam allows for a wide variety of applications.

Technical Specs:
Finish: matte chrome
Power consumption: 3Watts
Drive current: 700mA
Lumen output: 65 at 700mA
Lamp life: white 70% at 50,000
Rating: Class II
5500 White with Luxeon III Star LED
3200 Warm White with Z- Power LED

Part Numbers:

135781/s	white, 10° lens
135781/m	white, 30° lens
135781/fl	white, 45° lens
135781-1/s	warm white, 10°lens
135781-1/m	warm white, 30°lens
135781-1/fl	warm white, 45°ens

15774 Gateway Circle Tustin, CA 92780 ph: (714) 259-9959 fax: (714) 259-9969 www.brucklighting.com

Type: **J**

CU
164

collections

- ht collection
- secto design
- starline fire
- durat
- verso design
- woodnotes

secto design

- floor
- table
- wall
- pendant
  - octo
  - secto
  - victo

large

diameter: 11 $^{13}/_{16}$"

shade height: 23 $^{5}/_{8}$"

small

diameter: 9 $^{7}/_{8}$"

shade height: 17 $^{3}/_{4}$"

| olo | | showroom | | news | | contact |

p 303.444.7929 • **f** 303.555.1212 • 2020 20th st • boulder, co 80302 • info@oloinside.com

CU
164

Ariette 1 Wall/Ceiling Mount by Flos

by Flos

The Ariette Wall/Ceiling Mount Fixture provides general ambient light and features diffused light through two synthetic fabric squares, which are stretched over fiberglass rods that are held taut with injection molded fittings, and the diffusers rotate on a central mounting assembly. Four 40 Watt 120 Volt Opal A-19 Incandescent lamps (not included). This fixture can be either ceiling or wall mounted. Also available with Compact Fluorescent lamping and in larger sizes. Designed by Tobia Scarpa in 1973. Made in Italy. [more]

Details - Dimensions

The Ariette Wall/Ceiling Mount Fixture provides general ambient light and features diffused light through two synthetic fabric squares, which are stretched over fiberglass rods that are held taut with injection molded fittings, and the diffusers rotate on a central mounting assembly. Four 40 Watt 120 Volt Opal A-19 Incandescent lamps (not included). This fixture can be either ceiling or wall mounted. Also available with Compact Fluorescent lamping and in larger sizes. Designed by Tobia Scarpa in 1973. Made in Italy.

Dimensions:
Fixture: Width 31.2 in., Length 31.2 in.
Projection: Depth 7.8 in.

Brushed Nickel Arc Desk Lamp

This arc desk lamp with a frosted glass shade is anything but typical. Combines the functionality of a lamp with a sleek, contemporary design. Also has an on/off switch on the cord.

Key Features

- Brushed nickel finish.
- On/off switch.
- Includes one 40 watt halogen bulb.
- 20" high.
- 9" diameter base.
- Shade is 4" long and 3 1/2" wide.

About ET2

The ET2 brand comes from the Maxim Group Company. A relative newcomer to the lighting industry, ET2 is quickly developing a reputation for bold and exciting design. Their innovative table lamps and desk lamps all have a daring, contemporary look inspired by cutting-edge European lamp designs. These pieces are ideal for taking your décor in a stylish new contemporary direction.

DESCRIPTION

Corelite's small scale Cove Solo is an asymmetric lighting solution for the interior environment that offers flexibility in application and installation. The Cove Solo optimizes 1T5 performance and efficiency with an engineered optical system, which produces a smooth even gradient of light across the illuminated surface. This luminaire is ideal to accent architectural details or simply create an ambient layer of the illumination.

Catalog #		Type
Project		M-2
Comments		Date
Prepared by		

SPECIFICATION FEATURES

A ... Construction
Housing one piece die-formed 20-gauge corrosion resistant steel forming a 1-1/2" deep ballast channel. Standard 2'-0", 3'-0", 4'-0" and 8'-0" fixture lengths combine for continuous rows.

B ... Reflectors
Die-formed reflectors are highly specular anodized aluminum.

C ... Electrical
Fixtures are prewired with quick wire connectors and use UL listed Class P, T5HO program rapid start universal voltage electronic ballasts. Power factor of 97% with less than 10% THD. Fixtures and electrical components certified to UL and CUL standards.

D ... Finish
Reflector pans are anodized aluminum. Ballast channels are corrosion resistant steel.

Mounting
Fixture mounts directly to architectural cove or to wall structure. Refer to installation section for details.

Cove Solo

1T5HO

Architectural Cove
Asymmetric Indirect

Light Distribution
Indirect - 100.0%
Direct - 0.0%

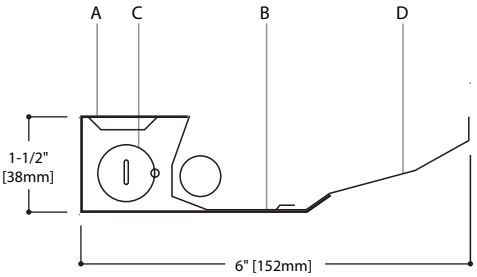

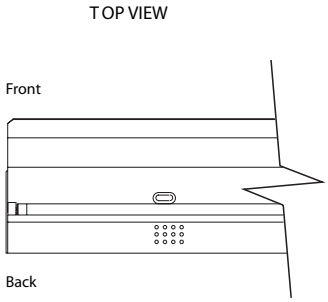

MODULES AND DIMENSIONS

22-3/8" [568mm]

34-1/8" [867mm]

46" [1168mm]

92" [2337mm]

Front Mount	Degree of Lift	Back Mount
1 1/2 x 6	0 (Standard)	1 1/2 x 6
2 x 6	5	1 7/8 x 6 1/8
2 1/2 x 6	10	2 1/8 x 6 1/4
3 x 5 3/4	15	2 1/2 x 6 1/4
3 1/2 x 5 5/8	20	2 3/4 x 6 1/8
3 7/8 x 5 1/2	25	3 x 6
4 1/4 x 5 1/4	30	3 3/8 x 6

plus 5 aiming system™

ORDERING INFORMATION

Sample Number: CS-SN-1T5-1Y-277-04

CS	S	N	1	14W T5	1	C	120	2'	

Series
CS= Cove Solo

Optics Up
S= Specular

Optics Down
N= None

Number of Lamps
1= 1 Lamp

Lamp Type
14W T5

Number of Circuits [1]
1= 1 Circuit

Wiring [1]
C= Standard Circuit
D= Dimming
E= Emergency
B= Battery Pack
T= Nightlight
Y= Daylight

Voltage [1]
120= 120V
277= 277V
347= 347V
UNV= Universal (120V-277V)

Run Length
Individually Mounted
Luminaires may be 2', 3', 4' or 8' in length
Continuously Mounted
Standard row configurations over 8' consist of 4' and 8' sections. 2' and 3' sections will be used for row lengths other than in 4' increments

Options
P5= Plus 5 Aiming System(tm)

Notes: 1 Not all options available. Please consult your Cooper Lighting Representative for availability. Specifications and dimensions subject to change without notice.

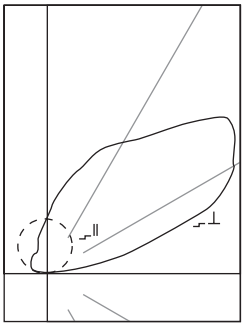

CS-SN-1T5
(1) FP54/835/HO
4500 Lumens

Efficiency 84.2%

Test Report
#ITL55922-2

Coefficients of Utilization

Effective floor cavity reflectance 20%

rc	80%				70%				50%			30%			10%			0%
rw	70	50	30	10	70	50	30	10	50	30	10	50	30	10	50	30	10	0
RCR																		
0	80	80	80	80	69	69	69	69	47	47	47	27	27	27	09	09	09	00
1	73	70	67	64	62	60	57	55	41	39	38	23	23	22	08	07	07	00
2	66	61	56	52	56	52	48	45	36	33	31	21	19	18	07	06	06	00
3	60	53	48	43	51	46	41	37	31	28	26	18	17	15	06	05	05	00
4	55	47	41	36	47	40	35	31	28	25	22	16	14	13	05	05	04	00
5	50	41	35	31	43	36	30	27	25	21	19	14	13	11	05	04	04	00
6	46	37	31	26	39	32	27	23	22	19	16	13	11	10	04	04	03	00
7	42	33	27	23	36	28	23	20	20	16	14	11	10	08	04	03	03	00
8	39	30	24	20	33	26	21	17	18	14	12	10	09	07	03	03	02	00
9	36	27	21	17	31	23	18	15	16	13	11	09	08	06	03	02	02	00
10	34	24	19	15	29	21	16	13	15	12	09	09	07	06	03	02	02	00

Zonal Lumen Summary

Zone	Lumens	%Lamp	%Fixture
0-30	0	0	0
0-40	0	0	0
0-60	0	0	0
0-90	2	0	.10
90-120	1403	31.90	37.90
90-130	2152	48.90	58.10
90-150	3190	72.50	58.10
90-180	3702	84.10	99.90
0-180	3705	84.20	100.00

Candela

Angle	Along II	45°	Across ⊥
180	543	543	543
175	630	599	545
170	785	695	537
165	952	801	526
160	1128	914	510
155	1325	1015	488
150	1460	1140	463
145	1577	1246	434
140	1785	1299	400
135	2083	1358	364
130	2348	1468	326
125	2248	1649	284
120	2124	1757	241
115	1902	1595	195
110	1464	1438	153
105	988	1069	107
100	543	594	63
95	60	188	24
90	0	16	0

COMMON CIRCUIT CONFIGURATIONS FOR ONE LAMP WALL MOUNT FIXTURES

1C=Single circuit luminaire
1E=Single circuit luminaire with emergency circuit
1B=Single circuit luminaire with battery pack

/1/ =Circuit 1
/E/ =Emergency Circuit
/B/ =Battery Circuit

P =Power Mount
NP =Non-Power Mount

1C

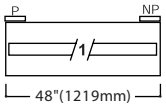

1E

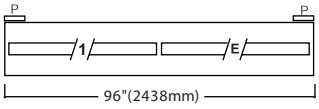

1B

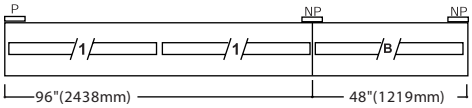

STANDARD ROW CONFIGURATIONS (2' and 3' sections will be used for row lengths other than in 4' increments)

FIXTURE LENGTH	4'	8'	12'	16'	20'	24'	28'	32'	36'	40'	44'	48'	52'	56'	60'	64'	68'	72'	76'	80'	84'	88'	92'	96'	100'	104'	108'
4'	1		1		1		1		1		1		1		1		1		1		1		1		1		1
8'		1	1	2	2	3	3	4	4	5	5	6	6	7	7	8	8	9	9	10	10	11	11	12	12	13	13

DESCRIPTION

Corelite's small scale Cove Solo is an asymmetric lighting solution for the interior environment that offers flexibility in application and installation. The Cove Solo optimizes 1T5 performance and efficiency with an engineered optical system, which produces a smooth even gradient of light across the illuminated surface. This luminaire is ideal to accent architectural details or simply create an ambient layer of the illumination.

Catalog #		Type
Project		M-4
Comments		Date
Prepared by		

SPECIFICATION FEATURES

A ... Construction
Housing one piece die-formed 20-gauge corrosion resistant steel forming a 1-1/2" deep ballast channel. Standard 2'-0", 3'-0", 4'-0" and 8'-0" fixture lengths combine for continuous rows.

B ... Reflectors
Die-formed reflectors are highly specular anodized aluminum.

C ... Electrical
Fixtures are prewired with quick wire connectors and use UL listed Class P, T5HO program rapid start universal voltage electronic ballasts. Power factor of 97% with less than 10% THD. Fixtures and electrical components certified to UL and CUL standards.

D ... Finish
Reflector pans are anodized aluminum. Ballast channels are corrosion resistant steel.

Mounting
Fixture mounts directly to architectural cove or to wall structure. Refer to installation section for details.

Cove Solo

1T5HO

Architectural Cove
Asymmetric Indirect

Light Distribution
Indirect - 100.0%
Direct - 0.0%

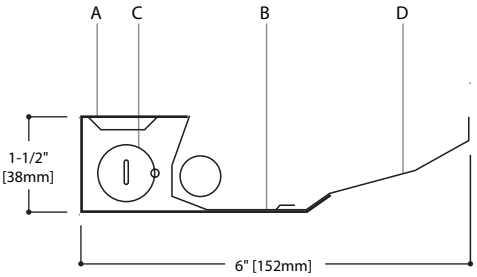

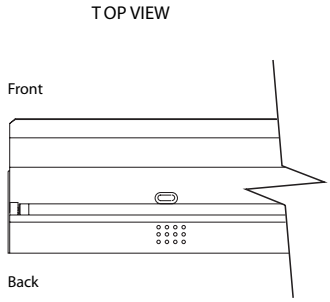

MODULES AND DIMENSIONS

22-3/8" [568mm]

34-1/8" [867mm]

46" [1168mm]

92" [2337mm]

Front Mount	Degree of Lift	Back Mount
1 1/2 x 6	0 (Standard)	1 1/2 x 6
2 x 6	5	1 7/8 x 6 1/8
2 1/2 x 6	10	2 1/8 x 6 1/4
3 x 5 3/4	15	2 1/2 x 6 1/4
3 1/2 x 5 5/8	20	2 3/4 x 6 1/8
3 7/8 x 5 1/2	25	3 x 6
4 1/4 x 5 1/4	30	3 3/8 x 6

plus 5 aiming system™

ORDERING INFORMATION

Sample Number: CS-SN-1T5-1Y-277-04

CS	S	N	1	28W T5	1	C	120	4'	

Series
CS= Cove Solo

Optics Up
S= Specular

Optics Down
N= None

Number of Lamps
1= 1 Lamp

Lamp Type
28W T5

Number of Circuits [1]
1= 1 Circuit

Wiring [1]
C= Standard Circuit
D= Dimming
E= Emergency
B= Battery Pack
T= Nightlight
Y= Daylight

Voltage [1]
120= 120V
277= 277V
347= 347V
UNV= Universal (120V-277V)

Run Length
Individually Mounted
Luminaires may be 2', 3', 4' or 8' in length
Continuously Mounted
Standard row configurations over 8' consist of 4' and 8' sections. 2' and 3' sections will be used for row lengths other than in 4' increments

Options
P5= Plus 5 Aiming System(tm)

Notes: 1 Not all options available. Please consult your Cooper Lighting Representative for availability. Specifications and dimensions subject to change without notice.

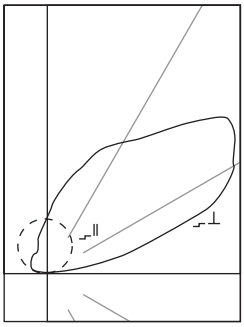

CS-SN-1T5
(1) FP54/835/HO
4500 Lumens

Efficiency 84.2%

Test Report
#ITL55922-2

Coefficients of Utilization

Effective floor cavity reflectance 20%

rc	80%				70%				50%			30%			10%			0%
rw	70	50	30	10	70	50	30	10	50	30	10	50	30	10	50	30	10	0
RCR																		
0	80	80	80	80	69	69	69	69	47	47	47	27	27	27	09	09	09	00
1	73	70	67	64	62	60	57	55	41	39	38	23	23	22	08	07	07	00
2	66	61	56	52	56	52	48	45	36	33	31	21	19	18	07	06	06	00
3	60	53	48	43	51	46	41	37	31	28	26	18	17	15	06	05	05	00
4	55	47	41	36	47	40	35	31	28	25	22	16	14	13	05	05	04	00
5	50	41	35	31	43	36	30	27	25	21	19	14	13	11	05	04	04	00
6	46	37	31	26	39	32	27	23	22	19	16	13	11	10	04	04	03	00
7	42	33	27	23	36	28	23	20	20	16	14	11	10	08	04	03	03	00
8	39	30	24	20	33	26	21	17	18	14	12	10	09	07	03	03	02	00
9	36	27	21	17	31	23	18	15	16	13	11	09	08	06	03	02	02	00
10	34	24	19	15	29	21	16	13	15	12	09	09	07	06	03	02	02	00

Zonal Lumen Summary

Zone	Lumens	%Lamp	%Fixture
0-30	0	0	0
0-40	0	0	0
0-60	0	0	0
0-90	2	0	.10
90-120	1403	31.90	37.90
90-130	2152	48.90	58.10
90-150	3190	72.50	58.10
90-180	3702	84.10	99.90
0-180	3705	84.20	100.00

Candela

Angle	Along II	45°	Across ⊥
180	543	543	543
175	630	599	545
170	785	695	537
165	952	801	526
160	1128	914	510
155	1325	1015	488
150	1460	1140	463
145	1577	1246	434
140	1785	1299	400
135	2083	1358	364
130	2348	1468	326
125	2248	1649	284
120	2124	1757	241
115	1902	1595	195
110	1464	1438	153
105	988	1069	107
100	543	594	63
95	60	188	24
90	0	16	0

COMMON CIRCUIT CONFIGURATIONS FOR ONE LAMP WALL MOUNT FIXTURES

1C =Single circuit luminaire
1E =Single circuit luminaire with emergency circuit
1B =Single circuit luminaire with battery pack

/1/ =Circuit 1
/E/ =Emergency Circuit
/B/ =Battery Circuit

P =Power Mount
NP =Non-Power Mount

1C

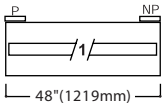

1E

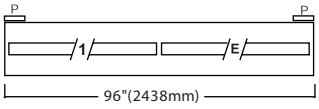

1B

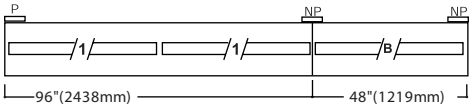

STANDARD ROW CONFIGURATIONS (2' and 3' sections will be used for row lengths other than in 4' increments)

FIXTURE LENGTH	4'	8'	12'	16'	20'	24'	28'	32'	36'	40'	44'	48'	52'	56'	60'	64'	68'	72'	76'	80'	84'	88'	92'	96'	100'	104'	108'
4'	1		1		1		1		1		1		1		1		1		1		1		1		1		1
8'		1	1	2	2	3	3	4	4	5	5	6	6	7	7	8	8	9	9	10	10	11	11	12	12	13	13

DESCRIPTION

Corelite's Iridium Perf Wall Mount is a semi-indirect fluorescent luminaire that features elegant styling with a sleek profile and end caps. The engineered optical system provides an asymmetric forward throw distribution. The Iridium Perf Wall may be mounted over standard 2"x4" J-Boxes for individual or continuous configurations using 4'and 8' modular sections. The Iridium Perf Wall is suited for open office perimeters, private offices, conference rooms, corridors and public spaces.

		Type
Catalog #		N-8
Project		
Comments		Date
Prepared by		

SPECIFICATION FEATURES

A ... Construction
Housing is one piece die-formed cold rolled steel, forming a 7"x 2-1/2" architectural profile. Standard 4'-0" and 8'-0" fixture lengths combine for continuous runs.

B ... End Caps
Standard Straight and optional Beveled end caps are precision die-cast aluminum mechanically attached without exposed fasteners.

C ... Reflectors
Die-formed reflectors are highly specular anodized aluminum.

D ... Electrical
Fixtures are prewired with quick wire connectors and use UL listed Class P, T5HO program rapid start universal voltage electronic ballasts. Power factor of 97% with less than 10% THD. Fixtures and electrical components certified to UL and CUL standards.

E ... Finish
Fixture housings are standard white using electrostatically applied polyester powder coat paint.

F ... Mounting
Fixture mounts directly to existing structure over a 2" x 4" standard electrical box mounted horizontally into the wall. Refer to installation section for details.

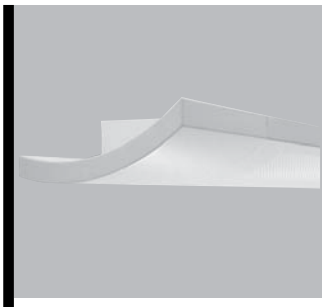

Iridium

PERF WALL
1T5HO

WALL MOUNT
SEMI - INDIRECT

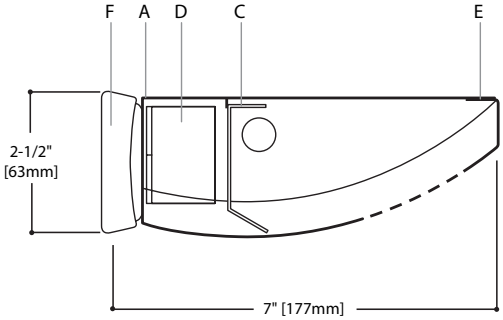

Standard Straight End Cap

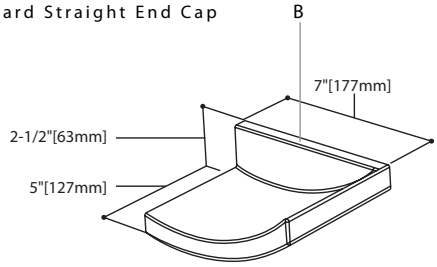

Beveled End Cap

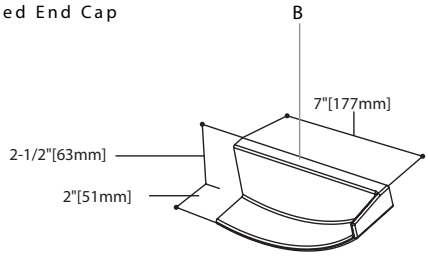

Light Distribution

Indirect - 94.6%
Direct - 5.4%

MODULES AND DIMENSIONS*

48" [1219mm]

96" [2438mm]

*Dimensions do not include end caps.

ORDERING INFORMATION

Sample Number: IW-SP-1T5-1Y-277-SU-WA-04

IW	S	P	1	28W T5	1	D(0-10)	120	SU-WA	8'	EB

Series
IW: Iridium Perf Wall Mount

Optics Up
S: Specular

Optics Down
P: Round Perf

Number of Lamps
1: 1 Lamp

Lamp Type
28W T5

Number of Circuits [1]
1: 1 Circuit

Wiring [1]
C: Standard Circuit
D: Dimming
E: Emergency
B: Battery Pack
T: Nightlight
Y: Daylight

Voltage [1]
120: 120V
277: 277V
347: 347V
UNV: Universal (120V-277V)

Suspension
SU-WA: Surface/Wall Mount

Run Length
Individually Mounted
Luminaires may be 4' or 8' in length
Continuously Mounted
Standard row configurations over 8' consist of 4' and 8' sections

Options
ES: Straight End Cap (Provided if none specified)
EB: Beveled End Cap

Notes: 1 Not all options available. Please consult your Cooper Lighting Representative for availability. Specifications and dimensions subject to change without notice.

PHOTOMETRICS

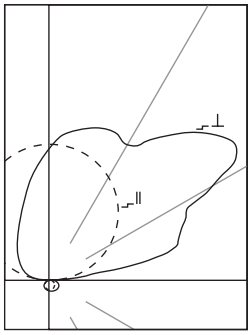

IW-SP-1T5
(1) FP54/841/HO
4500 Lumens

Efficiency 73.5%

Test Report
#LSI16233

Coefficients of Utilization

Effective floor cavity reflectance 20%

rc	80%				70%				50%			30%			10%			0%
rw	70	50	30	10	70	50	30	10	50	30	10	50	30	10	50	30	10	0
RCR																		
0	71	71	71	71	61	61	61	61	43	43	43	26	26	26	11	11	11	04
1	64	62	59	56	56	53	51	48	37	36	35	23	22	22	10	10	09	03
2	59	53	49	46	50	46	43	40	33	31	29	20	19	18	09	08	08	03
3	53	47	42	38	46	41	37	33	29	26	24	18	17	15	08	07	07	02
4	49	41	36	32	42	36	31	28	25	23	20	16	14	13	07	06	06	02
5	45	36	31	27	38	32	27	24	23	20	17	14	12	11	06	05	05	02
6	41	33	27	23	35	28	24	20	20	17	15	13	11	09	05	05	04	01
7	38	29	24	20	32	25	21	18	18	15	13	11	09	08	05	04	04	01
8	35	26	21	17	30	23	18	15	16	13	11	10	08	07	04	04	03	01
9	32	24	19	15	27	21	16	13	15	12	10	09	07	06	04	03	03	01
10	30	21	17	13	26	19	15	12	13	11	09	08	07	05	04	03	02	01

Candela

Angle	Along II	45º	Across ⊥
0	59	59	59
5	58	61	63
15	55	66	72
25	51	68	77
35	42	63	80
45	35	63	76
55	23	54	68
65	12	45	58
75	5	30	46
85	0	14	26
90	0	9	18
95	35	160	82
105	188	582	815
115	347	991	920
125	487	1023	1412
135	606	915	1309
145	702	912	1073
155	776	968	1011
165	826	947	988
175	851	900	918
180	842	842	842

Zonal Lumen Summary

Zone	Lumens	%Lamp	%Fixture
0-30	46	1.03	1.40
0-40	75	1.68	2.28
0-60	133	2.97	4.05
0-90	179	36.99	5.43
40-90	104	2.32	3.15
60-90	45	1.02	1.39
90-180	3126	69.48	94.57
0-180	3306	73.47	100.00

Luminance Data

Angle in Deg	0-Deg cd/sm	45-Deg cd/sm	90-Deg cd/sm
45	871	1190	1296
55	706	1121	1285
65	500	1125	1232
75	640	913	1126
85	0	559	784

COMMON CIRCUIT CONFIGURATIONS FOR ONE LAMP WALL MOUNT FIXTURES

1C =Single circuit luminaire
1E =Single circuit luminaire with emergency circuit
1B =Single circuit luminaire with battery pack

/1/ =Circuit 1
/E/ =Emergency Circuit
/B/ =Battery Circuit

P =Power Mount
NP =Non-Power Mount

1C

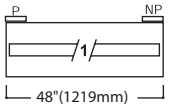

1E

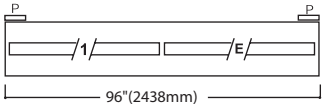

1B

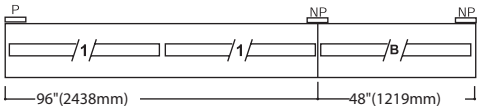

STANDARD ROW CONFIGURATIONS

FIXTURE LENGTH	4'	8'	12'	16'	20'	24'	28'	32'	36'	40'	44'	48'	52'	56'	60'	64'	68'	72'	76'	80'	84'	88'	92'	96'	100'	104'	108'
4'	1		1		1		1		1		1		1		1		1		1		1		1		1		1
8'		1	1	2	2	3	3	4	4	5	5	6	6	7	7	8	8	9	9	10	10	11	11	12	12	13	13

DESCRIPTION

Corelite's Iridium Perf Wall Mount is a semi-indirect fluorescent luminaire that features elegant styling with a sleek profile and end caps. The engineered optical system provides an asymmetric forward throw distribution. The Iridium Perf Wall may be mounted over standard 2"x4" J-Boxes for individual or continuous configurations using 4'and 8' modular sections. The Iridium Perf Wall is suited for open office perimeters, private offices, conference rooms, corridors and public spaces.

		Type
Catalog #		N-20
Project		
Comments		Date
Prepared by		

SPECIFICATION FEATURES

A ... Construction
Housing is one piece die-formed cold rolled steel, forming a 7"x 2-1/2" architectural profile. Standard 4'-0" and 8'-0" fixture lengths combine for continuous runs.

B ... End Caps
Standard Straight and optional Beveled end caps are precision die-cast aluminum mechanically attached without exposed fasteners.

C ... Reflectors
Die-formed reflectors are highly specular anodized aluminum.

D ... Electrical
Fixtures are prewired with quick wire connectors and use UL listed Class P, T5HO program rapid start universal voltage electronic ballasts. Power factor of 97% with less than 10% THD. Fixtures and electrical components certified to UL and CUL standards.

E ... Finish
Fixture housings are standard white using electrostatically applied polyester powder coat paint.

F ... Mounting
Fixture mounts directly to existing structure over a 2" x 4" standard electrical box mounted horizontally into the wall. Refer to installation section for details.

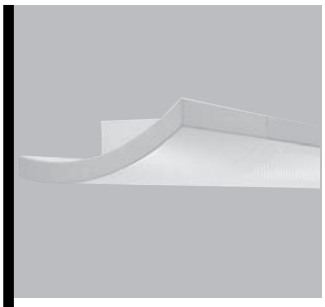

Iridium

PERF WALL
1T5HO

WALL MOUNT
SEMI - INDIRECT

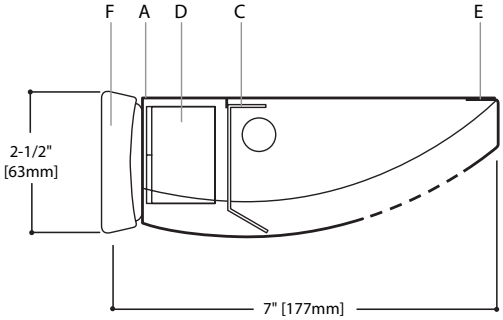

Standard Straight End Cap

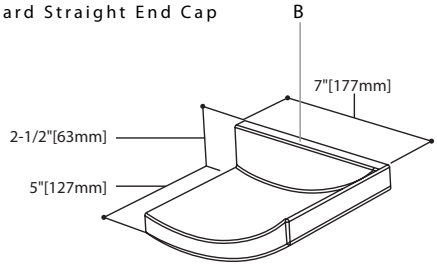

Beveled End Cap

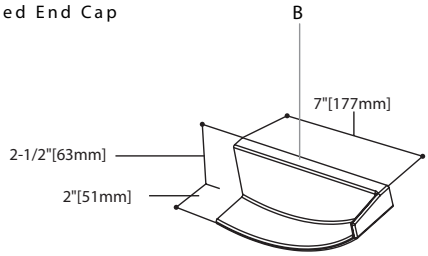

Light Distribution

Indirect - 94.6%
Direct - 5.4%

MODULES AND DIMENSIONS*

48" [1219mm]

96" [2438mm]

*Dimensions do not include end caps.

ORDERING INFORMATION

Sample Number: IW-SP-1T5-1Y-277-SU-WA-04

IW	S	P	1	28W T5	1	D(0-10)	120	SU-WA	20'	EB

Series
IW: Iridium Perf Wall Mount

Optics Up
S: Specular

Optics Down
P: Round Perf

Number of Lamps
1: 1 Lamp

Lamp Type
28W T5

Number of Circuits [1]
1: 1 Circuit

Wiring [1]
C: Standard Circuit
D: Dimming
E: Emergency
B: Battery Pack
T: Nightlight
Y: Daylight

Voltage [1]
120: 120V
277: 277V
347: 347V
UNV: Universal (120V-277V)

Suspension
SU-WA: Surface/Wall Mount

Run Length
Individually Mounted
Luminaires may be 4' or 8' in length
Continuously Mounted
Standard row configurations over 8' consist of 4' and 8' sections

Options
ES: Straight End Cap (Provided if none specified)
EB: Beveled End Cap

Notes: 1 Not all options available. Please consult your Cooper Lighting Representative for availability. Specifications and dimensions subject to change without notice.

PHOTOMETRICS

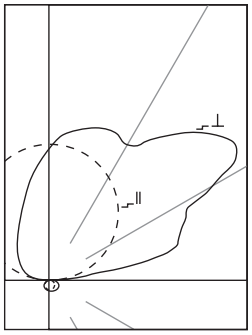

IW-SP-1T5
(1) FP54/841/HO
4500 Lumens

Efficiency 73.5%

Test Report
#LSI16233

Coefficients of Utilization

Effective floor cavity reflectance 20%

rc	80%				70%				50%			30%			10%			0%
rw	70	50	30	10	70	50	30	10	50	30	10	50	30	10	50	30	10	0
RCR																		
0	71	71	71	71	61	61	61	61	43	43	43	26	26	26	11	11	11	04
1	64	62	59	56	56	53	51	48	37	36	35	23	22	22	10	10	09	03
2	59	53	49	46	50	46	43	40	33	31	29	20	19	18	09	08	08	03
3	53	47	42	38	46	41	37	33	29	26	24	18	17	15	08	07	07	02
4	49	41	36	32	42	36	31	28	25	23	20	16	14	13	07	06	06	02
5	45	36	31	27	38	32	27	24	23	20	17	14	12	11	06	05	05	02
6	41	33	27	23	35	28	24	20	20	17	15	13	11	09	05	05	04	01
7	38	29	24	20	32	25	21	18	18	15	13	11	09	08	05	04	04	01
8	35	26	21	17	30	23	18	15	16	13	11	10	08	07	04	04	03	01
9	32	24	19	15	27	21	16	13	15	12	10	09	07	06	04	03	03	01
10	30	21	17	13	26	19	15	12	13	11	09	08	07	05	04	03	02	01

Candela

Angle	Along II	45º	Across ⊥
0	59	59	59
5	58	61	63
15	55	66	72
25	51	68	77
35	42	63	80
45	35	63	76
55	23	54	68
65	12	45	58
75	5	30	46
85	0	14	26
90	0	9	18
95	35	160	82
105	188	582	815
115	347	991	920
125	487	1023	1412
135	606	915	1309
145	702	912	1073
155	776	968	1011
165	826	947	988
175	851	900	918
180	842	842	842

Zonal Lumen Summary

Zone	Lumens	%Lamp	%Fixture
0-30	46	1.03	1.40
0-40	75	1.68	2.28
0-60	133	2.97	4.05
0-90	179	36.99	5.43
40-90	104	2.32	3.15
60-90	45	1.02	1.39
90-180	3126	69.48	94.57
0-180	3306	73.47	100.00

Luminance Data

Angle in Deg	0-Deg cd/sm	45-Deg cd/sm	90-Deg cd/sm
45	871	1190	1296
55	706	1121	1285
65	500	1125	1232
75	640	913	1126
85	0	559	784

COMMON CIRCUIT CONFIGURATIONS FOR ONE LAMP WALL MOUNT FIXTURES

1C =Single circuit luminaire
1E =Single circuit luminaire with emergency circuit
1B =Single circuit luminaire with battery pack

/1/ =Circuit 1
/E/ =Emergency Circuit
/B/ =Battery Circuit

P =Power Mount
NP =Non-Power Mount

1C

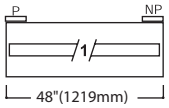

1E

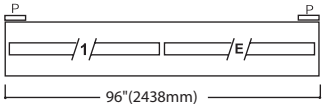

1B

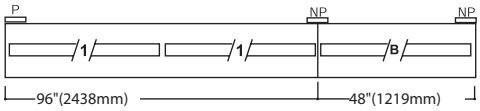

STANDARD ROW CONFIGURATIONS

FIXTURE LENGTH	4'	8'	12'	16'	20'	24'	28'	32'	36'	40'	44'	48'	52'	56'	60'	64'	68'	72'	76'	80'	84'	88'	92'	96'	100'	104'	108'
4'	1		1		1		1		1		1		1		1		1		1		1		1		1		1
8'		1	1	2	2	3	3	4	4	5	5	6	6	7	7	8	8	9	9	10	10	11	11	12	12	13	13

Product Number: 20948

Order Abbreviation: FP28/830/PM/ECO

General Description: 28W, T5 PENTRON PREMIER fluorescent lamp, 3000K color temperature, rare earth phosphor, 85 CRI, ECOLOGIC

Product Information	
Abbrev. With Packaging Info.	FP28830PMECO 40/CS 1/SKU
Actual Length (in)	45.8
Actual Length (mm)	1163.2
Average Rated Life (hr)	20000
Base	Miniature Bipin
Bulb	T5
Color Rendering Index (CRI)	85
Diameter (in)	0.67
Diameter (mm)	17.0
Family Brand Name	PENTRON® ECO®
Initial Lumens at 25C	2730
Initial Lumens at 35C	3050
Mean Lumens at 25C	2594
Mean Lumens at 35C	2898
Nominal Length (in)	48
Nominal Wattage (W)	28.00

Item Number	OSRAM SYLVANIA Description	Input Voltage (VAC)	Input Current (AMPS)	Lamp Type	Rated Lumens (lm)	No. of Lamps	Ballast Factor (BF)	System Lumens	Input Wattage (W)	System Efficacy (lm/W)
QUICKTRONIC® *PROFESSIONAL* PROStart® COMPACT FLUORESCENT - UNIVERSAL VOLTAGE DUAL ENTRY[5,6]										
NORMAL BALLAST FACTOR										
51818 ✪	QTP 1/2x13CF/UNV	120-277	0.25/0.11	13W DD/E,T/E	900	1	1.00	900	16	56
51850 ✪	*QTP 1/2x13CF/UNV-KIT* ▲			13W DD/E,T/E	900	2	1.00	1800	29	62
51823 ✪	QTP 1/2x18CF/UNV	120-277	0.32/0.14	18W DD/E,T/E	1200	1	1.00	1200	20	60
51851 ✪	*QTP 1/2x18CF/UNV-KIT* ▲			18W DD/E,T/E	1200	2	1.00	2400	38	63
51833 ✪	QTP 2x26CF/UNV	120-277	0.50/0.22	26W DD/E,T/E	1800	1	1.00	1800	28	64
51852 ✪	*QTP 2x26CF/UNV-KIT* ▲			26W DD/E,T/E	1800	2	1.00	3600	54	67
51898	QTP 2x26CF/UNV PEM			32W DT/E	2400	1	0.98	2350	35	67
				42W DT/E	3200	1	1.00	3200	45	71
51843	QTP 2x26/32/42CF/UNV M	120-277	0.90/0.40	26W DT/E	1800	2	1.02	3670	54	68
51853 ✪	*QTP 2x26/32/42CF/UNV M-KIT* ▲		0.53/0.23	32W DT/E	2400	2	0.96	4600	69	67
51863	QTP 2x26/32/42CF/UNV M PEM		0.57/0.25	42W DT/E	3200	2	0.95	6080	94	65
				57W DT/E	4300	1	1.00	4300	62	69
				70W DT/E	5200	1	0.92	4780	71	67
Also operates: see Ballast Technology & Specification Guide for additional lamp types.								▲CF Kits include a ballast, screws, wire, mounting bracket, an instruction sheet and a wire removal tool.		
NORMAL BALLAST FACTOR - *QTP CF models above replace gray shaded models below*										
51718	QTP 1/2x13CF/UNV BS	120-277	0.25/0.11	13W DD/E,T/E	900	1	1.00	900	16	56
51748	QTP 1/2x13CF/UNV TS			13W DD/E,T/E	900	2	1.00	1800	29	62
51723	QTP 1/2x18CF/UNV BS	120-277	0.32/0.14	18W DD/E,T/E	1200	1	1.00	1200	20	60
51753	QTP 1/2x18CF/UNV TS			18W DD/E,T/E	1200	2	1.00	2400	38	63
51733	QTP 2x26CF/UNV BS	120-277	0.50/0.22	26W DD/E,T/E	1800	1	1.00	1800	28	64
51763	QTP 2x26CF/UNV TS			26W DD/E,T/E	1800	2	1.00	3600	54	67
				32W DT/E	2400	1	0.98	2350	35	67
				42W DT/E	3200	1	1.00	3200	45	71
51738	QTP 1/2xCF/UNV BM	120-277	0.57/0.25	26W DD/E,T/E	1800	1	1.02	1830	28	65
51798	QTP 1/2xCF/UNV PM			26W DD/E,T/E	1800	2	1.02	3670	57	64
51768	QTP 1/2xCF/UNV TM			32W DT/E	2400	1	0.97	2330	36	65
				42W DT/E	3200	1	1.00	3200	46	70
51743	QTP 2x26/32/42CF/UNV BM	120-277	0.90/0.40	26W DT/E	1800	2	1.02	3670	54	68
51803	QTP 2x26/32/42CF/UNV PM		0.53/0.23	32W DT/E	2400	2	0.96	4600	69	67
51773	QTP 2x26/32/42CF/UNV TM		0.57/0.25	42W DT/E	3200	2	0.95	6080	94	65
	Also operates one 57W or 70W CFL lamps			57W DT/E	4300	1	1.00	4300	62	69
				70W DT/E	5200	1	0.92	4780	71	67
QUICKTRONIC® *HIGH EFFICIENCY* POWERSENSE™ 32 T8 DIMMING SYSTEMS - A list of controllers is available from OSRAM SYLVANIA										
Power-line control (2-wire) or 0-10Vdc control (4-wire) - 100-5% Dimming Range - <10% THD										
50705	QTP 1x32T8/UNV DIM-TC	120-277	0.27/0.12	F032XP	3000	1	0.88	2640	30	88
							0.05	150	8	
50707	QTP 2x32T8/UNV DIM-TC	120-277	0.54/0.24	F032XP	3000	2	0.88	5280	60/58	88/91
							0.05	300	15	
50714	QTP 3x32T8/UNV DIM-TCL	120-277	0.73/0.30	F032XP	3000	3	0.88	7920	87/84	91/94
							0.05	450	20	
50716	QTP 4x32T8/UNV DIM-TCL	120-277	0.96/0.40	F032XP	3000	4	0.88	10560	114/110	92/96
							0.05	600	27	
POWERSENSE™ QTP models above also operate these lamps: F025, F017 & FB032. POWERSENSE T8 replaces former Helios T8 dimming products.										
QUICKTRONIC® *HIGH EFFICIENCY* HELIOS™ 32 T8 DIMMING SYSTEMS - A list of controllers is available from OSRAM SYLVANIA										
High Ballast Factor - "PLUS" High Light Output System - *For 277V, 0-10Vdc Control Applications Only*										
50718 ✪	QTP 4x32T8/277 DIM PLUS-TCL	277	0.53	F032XP	3000	4	1.20	14400	145	99
							0.05	600	28	
QUICKTRONIC® *HIGH EFFICIENCY* POWERSENSE™ 28 T5 DIMMING SYSTEMS - A list of controllers is available from OSRAM SYLVANIA										
Power-line control (2-wire) or 0-10Vdc control (4-wire) - 100-1% Dimming Range - <10% THD										
50726 ✪	QTP 2x28T5/UNV DIM-TCL	120-277	0.53/0.23	FP28	2900	2	1.00	5800	63/62	92/94
							0.01	58	10	
POWERSENSE™ QTP model above also operate these lamps: FP35, FP21 & FP14										
QUICKTRONIC® *PROFESSIONAL* HELIOS™ 54 T5 HO DIMMING SYSTEMS[3] - A list of controllers is available from OSRAM SYLVANIA										
(0-10Vdc control) - 100-1% Dimming Range - <10% THD										
49671	QT1x54/120PHO-DIM	120	0.54	FP54T5HO	5000	1	1.00	5000	62	81
							0.01	50	8	
49672	QT1x54/277PHO-DIM	277	0.23	FP54T5HO	5000	1	1.00	5000	61	82
							0.01	50	8	
49673	QT2x54/120PHO-DIM	120	1.07	FP54T5HO	5000	2	1.00	10000	120	83
							0.01	100	18	
49674	QT2x54/277PHO-DIM	277	0.45	FP54T5HO	5000	2	1.00	10000	117	85
							0.01	100	18	
HELIOS™ QT models above also operate these lamps: FT55DL & FPC55										

3: Rated lamp lumens and performance data based on PENTRON® HO lamps. Rated lumens at 35°C lamp ambient temperature,
5: Rated lamp lumens and performance data based on DULUX T/E series 4 pin lamps. 6: Data is for all models within the brackets.
The maximum input current is shown for maximum input power. ✪ New Product. Contact OSRAM SYLVANIA for product availability.

Recessed wall luminaires - stainless steel

Type: **P**
BEGA Product #:
Project:
Voltage:
Color:
Options:
Modified:

Housing: Constructed of die cast aluminum.
Enclosure: All stainless steel faceplate, 3/16" thick, flush tempered glass clear with white translucent ceramic coating. Faceplate is secured by four (4) flat socket head, stainless steel, captive screws threaded into stainless steel inserts in the housing casting. Continuous high temperature O-ring gasket for weather tight operation.

Electrical: Lampholder: Compact fluorescent; G23-2 (9W), 2-pin, rated 75W, 600V.
Ballast: Magnetic, HPF available in 120V or 277V - specify.

Through Wiring: Maximum of four (4) No. 12 AWG conductors (plus ground) suitable for 75°C. Two 7/8" knockouts provided for 1/2" conduit.

Finish: #4, light brushed stainless steel. Stainless steel requires regular cleaning and maintenance, much like household appliances, to maintain its luster and to prevent tarnishing or the appearance of rust like stains.

U.L. listed, suitable for wet locations and for installation within 3 feet of ground. Suitable for all types of construction including poured concrete. Type non-IC. Protection class: IP 65.

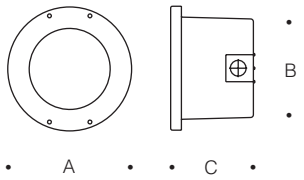

Recessed luminaires with stainless steel faceplate and white diffusers. U.L. listed, suitable for wet locations. IP 65.
Finish: #4 brushed stainless steel.

			Lamp	Lumen	A	B	C
2815P	Recessed	ADA	1 9W CF quad-2p	525	8¼	7	4¾
515	~~GPO, Concrete Protection Cover for 2815P~~						

GRAINGER
FOR THE ONES WHO GET IT DONE

Fixture Vapor Tight

Vapor Tight Fixture, Lamp Power Rating 200 Watt Maximum, Voltage Rating 120 Volts, Lamp Type Incandescent, Suggested Lamp Stock Number 4V586, Ceiling Mount, UL Listed for Wet Locations, Length 10.00 In, Width 4.25 In, Depth 4.25 In, Gray Finish

Grainger Item #	3RB17
Brand	LUMAPRO
Mfr. Model #	3RB17
Ship Qty.	1
Sell Qty. (Will-Call)	1
Ship Weight (lbs.)	3.2
Usually Ships	Today
Catalog Page No.	530

Price shown may not reflect your price. Log in or register.

Additional Info

Rough Service Vandal-Resistant Fixtures
Engineered to withstand extreme physical assault and environmental abuse.
UL Listed for wet locations.
Uses: Schools, recreational areas, institutions, apartment complexes, train and bus stations, parking garages, and government buildings.

- Ideal for high-risk applications
- Lamps not included, except where noted

Vapor-Tight
Die-cast aluminum housing has twist-on guard and fully enclosed, gasketed glass globe.
Ideal for high traffic, dirty, dusty, or weather-exposed areas. Premium porcelain socket. Units fit on 3/4" conduit, or 1/2" conduit if 1/2" NPT reducer bushing (included) is utilized. Nos. 3RB17 and 3RB18 are prewired with leads for mounting on a flush surface (4" round or octagonal boxes).

Tech Specs

Item: Vapor Tight Fixtures
Lamp Quantity: 1
Lamp Type: Incandescent
Lamp Watts: 200
Fixture Wattage: 200
Voltage: 120
Description/Special Features: Prewired with Leads for Mounting on a Flush Surface
Lens Type: Clear Glass Globe is Fully Enclosed and Gasketed
Housing Material: Cast Aluminum

Housing Finish: Gray
Suggested Lamp Item No.: 5V922
Lamp Included: Lamp Not Included
Mounting: Ceiling, 3/4" Conduit
Length (In.): 10
Height (In.): 4 1/4
Width (In.): 4 1/4
Standards: UL Listed

Notes & Restrictions

Note: Not recommended for use in commercial or industrial range hoods or ovens.

Deck Lighting

The modern, simple solution to designer deck lighting.

These quality UniLED™ stainless steel lights bring a deck to life at night!

These lights help create a mood providing subtle ambient lighting,and are particularly useful as marker lights around the edge of a deck or on steps.

Available in a range of standard LED Colours :-

White, Blue, Red, Green, Amber

Close up view of a single round Double Lamp Deck Light

Features include :-

- Safe
- Made from Marine Grade Stainless Steel
- Exterior Use
- Very Low Power Consumption
- 24 Volt
- 100,000 Hour Estimated Life
- UniLED lights have been installed in many parts of the world, in countries that have different mains electricty voltage ranging from 110v to 240v.
- Submersible
- Easy to install
- Range of Colours
- CE Approved
- Remote Control Available
- Exterior Power Supply supplied with the box set runs up to 25 lights
- Genuine UniLED™ lights *not imitation*
- Registered DESIGN NUMBER 3004742 with the Patent Office

UniLED™

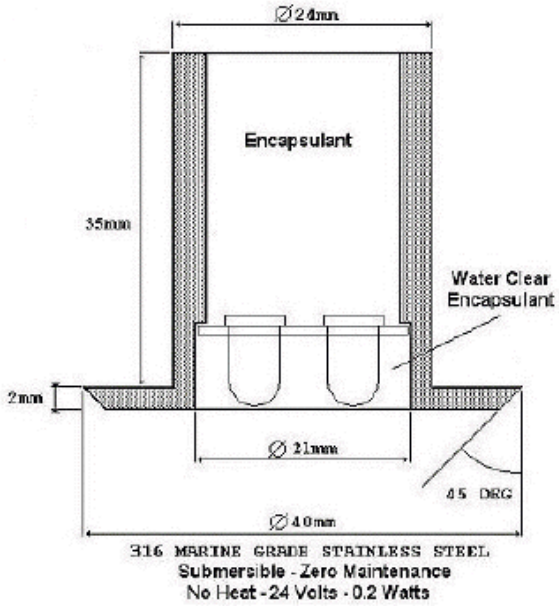

Easy Installation

These deck lights are designed to be easy to install for an electrical professional.

- Drill hole in your deck with the drill bit provided in the box set.
- Insert deck light.
- Connect the pre-wired **deck lights together 'daisy chain' fashion as indicated in diagram.

** each light has 2 lengths of 1 metre wire complete with connectors on ends

For answers to more questions about these deck lights please see our FAQ (Frequently Asked Questions)

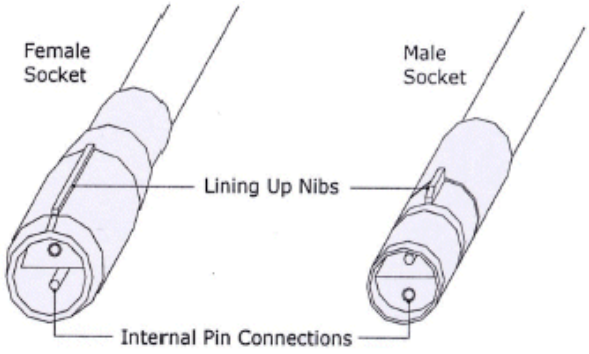

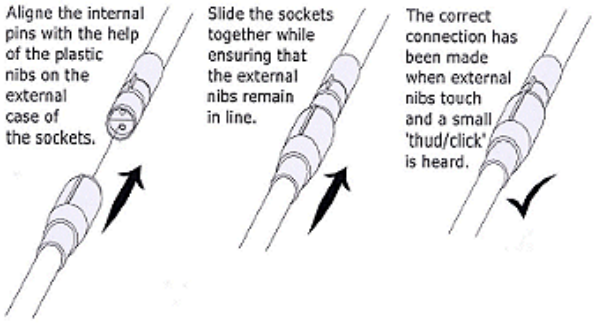

Wall and ceiling luminaires

Type: **EX**
BEGA Product #:
Project:
Voltage:
Color:
Options:
Modified:

Housing: One piece die cast aluminum supplied with center lock-up, universal mounting bracket for direct attachment to 3½" or 4" octagonal wiring box.
Enclosure: Hand blown three-ply opal glass with screw thread neck, fully gasketed for weather tight operation using a molded silicone rubber O-ring. One piece die cast aluminum half lid and guard, secured by three (3) captive socket head, stainless steel screws threaded into stainless steel inserts. Interior of lamp compartment painted gloss white.

Electrical: Lampholder: Fluorescent are type G24q-1 (13W), rated 75W, 250V.
Ballast: Compact fluorescent 13W is electronic ballast operating 4-pin lamps which provide reliable low temperature starting down to -20°C. Electronic ballast is universal voltage 120V through 277V.

Finish: These luminaires are available in five standard BEGA colors: Black (BLK); White (WHT); Bronze (BRZ); Silver (SLV); Eurocoat™ (URO). To specify, add appropriate suffix to catalog number. Custom colors supplied on special order.

U.L. listed, suitable for wet locations. Protection class: IP 65.

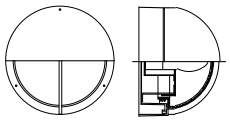

• A • • B •

Wall or ceiling mounted luminaires with rugged die cast aluminum half lid and guard. Three-ply opal glass with screw neck. Polycarbonate diffuser available - suffix: PDC. U.L. listed, suitable for wet locations. IP 65.
Color: Standard BEGA finishes.

		Lamp		Lumen	A	B
2955P	Wall	2	13W CF quad-4p	1800	10¼	8¼
SBXC-10	Surface wiring box with cover for 10¼" φ luminaires					

BEGA/US 1000 BEGA Way, Carpinteria, CA 93013 [P] 805·684·0533 [F] 805·684·6682

Recessed wall luminaires - stainless steel

Type: **PX**
BEGA Product #:
Project:
Voltage:
Color:
Options:
Modified:

Housing: Constructed of die cast and extruded aluminum with integral wiring compartment. Mounting tabs provided.
Enclosure: All stainless steel faceplate, 3/16" thick. 1/8" thick, tempered glass, etched, (behind louvers). Faceplate is secured by two (2) flat socket head, stainless steel, captive screws threaded into stainless steel inserts in the housing casting. Continuous high temperature O-ring gasket for weather tight operation.

Electrical: Lampholder: G23 (7W/9W), 2-pin, rated 75W, 600V.
Ballast: Magnetic, HPF available in 120V or 277V - specify.
Through Wiring: Maximum of four (4) No. 12 AWG conductors (plus ground) suitable for 75°C. Two 7/8" knockouts provided for 1/2" conduit.

Finish: #4, brushed stainless steel. Stainless steel requires regular cleaning and maintenance, much like household appliances, to maintain its luster and to prevent tarnishing or the appearance of rust like stains.

U.L. listed, suitable for wet locations and for installation within 3 feet of ground. Suitable for all types of construction including poured concrete. Type non- IC. Protection class: IP 64.

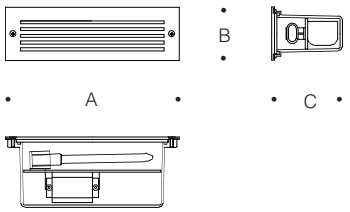

Recessed luminaires with stainless steel faceplate with integral louvers and etched tempered glass diffusers.
U.L. listed, suitable for wet locations. IP 64.
Finish: #4 brushed stainless steel.

			Lamp	Lumen	A	B	C
2036P	Recessed	ADA	1 7/9W CF twin-2p	400/600	10 3/8	3 3/16	4

BEGA/US 1000 BEGA Way, Carpinteria, CA 93013 [P] 805·684·0533 [F] 805·684·6682

LightSaver® LS-301 Dimming Photosensor

Types: **LPC, LR1, LR2**

Product Overview

Description

The LightSaver LS-301 is a ceiling mount, low voltage indoor photosensor that works with standard, 0-10 VDC electronic dimming ballasts to dim lighting as daylight increases.

Operation

The LS-301 mounts on a ceiling and utilizes a spectral filtering system to measure daylight and electric light levels. A closed loop daylighting system, the LS-301 measures the total light level from daylight and electric light in the controlled area to adjust electric lighting levels. As the daylight contribution increases, the lights dim down. The photosensor utilizes sliding setpoint control, which responds to the different spatial distribution qualities of electric light and daylight. The LS-301 calculates the required light level for current daylight contribution based on two setpoints. One represents the target level when no daylight is present (night setpoint) and the other when significant daylight is present (day setpoint).

Adjustment via Handheld Remote Control

All LS-301 adjustments are made with one of two handheld remotes. The LSR-301-S provides five buttons for initial set-up, which is easily completed by first raising or lowering electric light levels to desired levels, then programming this target level into the photosensor. The LSR-301-P provides three buttons for occupants to adjust light levels. With this optional tool, users can increase target light levels by up to 25% or reduce them to the lamp/ballast minimum level. Pressing the "Auto" button returns the control to programmed levels.

Applications

The LS-301 is designed to blend into its surroundings when installed in any environment. It provides one zone of daylighting control in a private office or classroom. In these applications, the LS-301 can be combined with an occupancy sensor. Often, it is possible for the LS-301 to share a single power pack with occupancy sensor(s).

Features

- Provides precise control of lighting to maintain desired light level
- Extremely linear photocell response with greater than 1% accuracy
- Designed to measure light as the human eye perceives it, eliminating "overreporting" illumination levels provided by daylight
- Separate handheld remote controls for setup and occupant adjustment to prevent tampering
- Boosts energy savings by reducing maximum lamp output, often resulting in a 20% reduction or more compared with lights at full output
- Achieves lumen maintenance by holding target light level as lamp output decreases over time

Specifications

- Full range dimming: .2 VDC (minimum) to 10 VDC (100% lighting) output voltage
- Current consumption: 30 mA @ 24 VDC
- In typical applications, setpoints are adjustable from 20-60 footcandles (210-640 lux)
- Controls up to 50 standard dimming ballasts in one zone
- Sensor leads: gray and violet to ballast, red and black to 24 VDC
- Dimensions: 2.35" diameter. x 0.875" depth (60mm x 22mm), threaded piece extends 1.25" (31.8mm) from back, fits .5" knockout
- Five-year warranty

Product Controls

Remote Controls

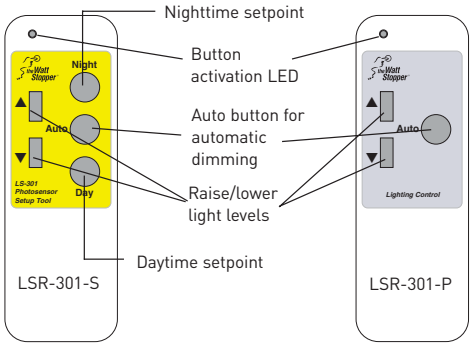

Remote handheld (above left) enables easy set-up while optional occupant remote provides adjustability for individual lighting preferences.

Spectral Response Curve

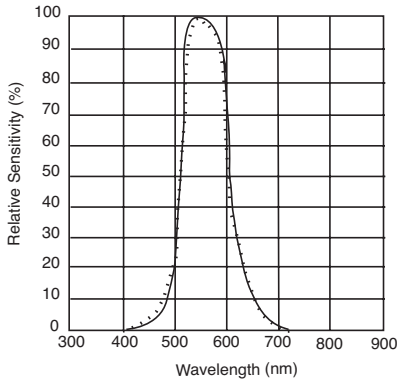

The spectral response of the LS-301 photocell closely matches the sensitivity of the human eye.

Wiring & Installation

Wiring

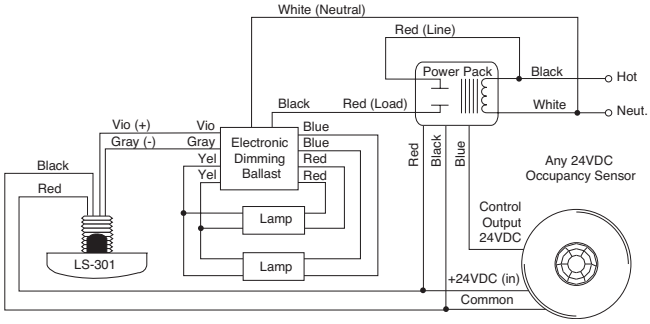

Mounting and Installation

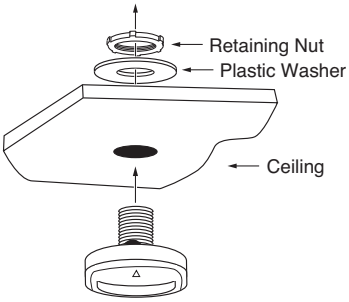

Coverage

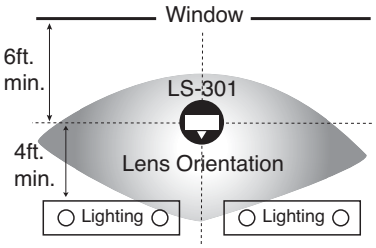

Placement Guidelines

- Mount photocell between 6 and 12 feet (1.8m - 3.7m) from window.
- Do not mount directly above direct/indirect pendant fixtures. Mount at least 4 feet (1.2m) from pendant fixtures.

Ordering Information

Catalog No.	Description	Input Voltage
☐ LS-301	Dimming Photosensor	24 VDC
☐ LSR-301-S	Setup Remote Control (2 AAA batteries included)	
☐ LSR-301-P	Occupant Remote Control (2 AAA batteries included)	

LS-301 works with Watt Stopper power packs

Pub. No. 17505

B Power and Auxiliary Relay Packs

Type: **LPP**

Product Overview

Description

Power packs provide 24VDC operating voltage to all Watt Stopper 24VDC occupancy sensors and LightSaver controllers. Auxiliary relay packs are similar to power packs but have no transformer power supply, only an isolated relay.

Operation

Power packs consist of a transformer and high-current relay combined in one small, powerful package. The transformer has a primary high voltage input and a secondary, low voltage output (24 VDC,114 mA with relay connected). The secondary voltage provides operating power to Watt Stopper sensors. When the occupancy sensors detect motion or light sensors detect inadequate ambient light, they electrically close an internal circuit which sends 24 VDC back to the power or auxiliary relay packs that control the lighting system.

Plenum Rated

The B power packs are UL 2043 plenum rated with teflon coated low voltage leads and plenum rated plastic. This means that the power packs do not need to be installed in the junction box, but can be installed in the plenum. They are housed in ABS, UL-rated 94V-0 plastic enclosures.

Applications

Watt Stopper power and auxiliary relay packs are designed to be flexible enough to control almost any lighting or HVAC load. For example, power packs can control lighting circuits, self-contained air conditioners, pumps, fans, motors, VAV systems, motorized damper controls and setback thermostats. They are excellent for any application which requires high voltage switching through low voltage controls. By linking power packs and sensors, an almost unlimited number of configurations can be obtained.

Features

- Self-contained transformer relay system
- Available for 120, 220 to 240, 277 and 347 volt systems
- Capable of switching up to 20 Amps of electrical load (ballast)
- Installation in J-box not required
- Low voltage leads are teflon coated for use in plenum applications
- Can be used as a low voltage switch for other applications or as stand-alone low voltage switch
- 1/2 inch snap-in nipple attaches to standard electrical enclosures via 1/2 inch knockouts
- Zero crossing circuitry for reliability and increased product life (120, 277, 240 volt versions only)

Specifications

- Secondary voltage of 24 VDC
- Secondary output of 150 mA, 114 mA with relay connected
- Low voltage leads are rated for 300 volts
- UL-rated 94V-0 plastic enclosure
- UL 2043 plenum rated
- Dimensions: 1.6" x 2.75" x 1.6" (41mm x 70mm x 41mm) with a 1/2 inch snap-in nipple
- UL and CUL listed; Five year warranty

System Layout

Power Pack Installation

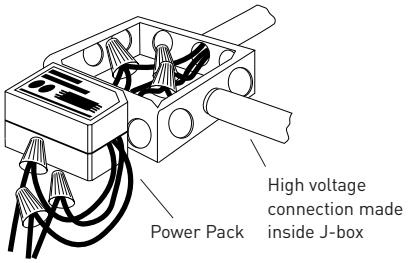

Power Pack Schematic

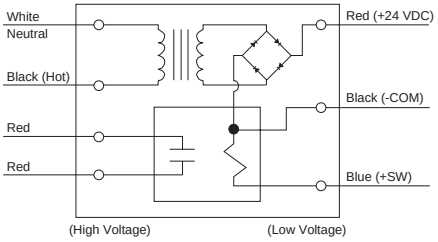

Wiring Diagrams

Power Pack with Ceiling Sensor

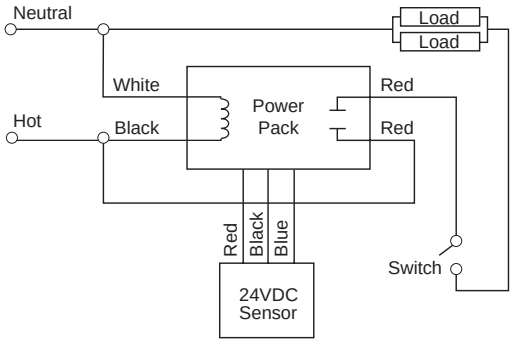

Auxiliary Relay Pack with Sensor

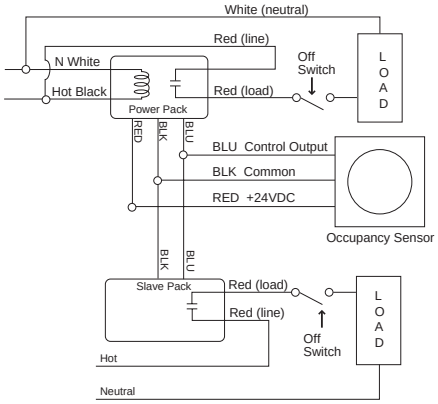

Ordering Information

Catalog No.	Description	Input Voltage	Load Ratings Ballast(A)	Incan(A)	Motor(HP)	Output
☐ B120E-P*	Power Pack	120 VAC; 60 Hz	20	13	1	24 VDC; 150 mA**
☐ B277E-P*	Power Pack	277 VAC; 60 Hz	20	-	-	24 VDC; 150 mA**
☐ B230E-P*	Power Pack	220-240 VAC; 50-60 Hz	20	13	1	24 VDC; 150 mA**
☐ B347D-P	Power Pack	347 VAC; 60 Hz	15	-	-	24 VDC; 150 mA**
☐ S120/277/347E-P	Relay Pack	120/277/347 VAC; 60 Hz	20/20/15	13/-/-	1/-/-	

* These power packs feature zero crossing
**Output is 150 mA before relay is connected and 114 mA after relay is connected.
Power packs are white; auxiliary relay packs are black.

Installation Notes

1. All Watt Stopper power packs should be installed in accordance with state, local, and national electrical codes and requirements.
2. Power packs are designed to attach to existing or new electrical enclosures with 1/2 inch knockouts. (Check electrical codes in your area.)
3. Most applications require UL listed, 18-22 AWG, 3-conductor, Class 2 cable for low voltage wiring. For plenum return ceilings use UL listed plenum-approved cables.

Pub. No. 6707

MIRO

Miro Architectural Switches, Dimmers, and Fan Controllers

Type: **LD**

Product Overview

Description

Miro Switches, Dimmers, Fan Controllers, and Multilocation Controllers offer reliable operation of a wide variety of lighting loads and ceiling fans. Switches operate a full range of lighting and non-lighting loads, while Incandescent or Universal Dimmers operate dimmable lighting loads. Fan Controllers are capable of operating two ceiling fans from a single location. Multilocation Controllers are used in conjunction with Dimmers to enable dimming control from multiple locations.

Operation

Users press up and down on the Control Paddles to turn loads on and off (Switches) or raise and lower light levels (Dimmers). Dimmers may also be used as stand-alone replacements for single-pole light switches. Users operate Fan Controllers via the paddle and push-buttons on the face, with four speeds and OFF, as well as speed up or slow down.

Deratings

Derate dimmers as follows:

	Maximum Capacity		
	Single Dimmer	Dimmer at end of multi-gang	Dimmer in middle of multi-gang
• Incandescent / Quartz Halogen	600W	500W	400W
• Magnetic Low Voltage	500W	400W	300W
• Electronic Low Voltage	500W	400W	300W
• Cold Cathode / Neon	500W	400W	300W
• Fluorescent:			
– 2 Wire	500W	400W	300W
– Compact	500W	400W	300W

Features

- Full line of specification-grade residential/light commercial devices
- Optional LED pilot light for single-pole 3- and 4-way switches
- Multilocation dimming and fan controls
- Compatible with most load types
- Last level recall (preset)
- Patented overload and short circuit protection (Dimmers and Fan Controllers)
- Silent or "de-humming" technology for buzz-free fan control operation

Specifications

	Switches	Lighted Switches	Incandescent Dimmer	Universal Dimmer	Multilocation Controller	Fan Controller
Electrical						
Voltage	**120V/277V**	**120V**	**120V**	**120V**	**120V**	**120V**
Max Load	**15A**	**15A**	**600W***	**600W***	**N/A**	**1.5A**
Min Load	**N/A**	**N/A**	**40W**	**25W**	**N/A**	**N/A**
Neutral required				•	•	•
Traveler required					•	
Load Types						
Incandescent	x	x	•	•	•	
Dimmable magnetic low-voltage	x	x		•	•	
Dimmable electronic low-voltage	x	x		•	•	
Dimmable neon, cold-cathode	x	x		•	•	
Dimmable 2-wire fluorescent **	x	x				
Non-dimmable lighting loads	•	•				
Motors, pumps	•	•				
Ceiling fan(s)						•
Features						
Square-law dimming			•	•		
Last level recall			•	•	•	•
Air-gap isolation switch			•	•		•
Long-life status LED		•	•	•		•
Default fade rate			2 sec	2 sec	2 sec	
Overload protection			•	•		•
Short-circuit protection			•	•		•
UL listed; five-year warranty	•	•	•	•	•	•

Dimensions:
MDS246, MDS248, MDS268:
2.65"L x 1.78"W x 1.75"D; depth in wall 1.35" (67.3mm x 45.2mm x 44.5mm; depth in wall 34.3mm)
MDS266, MDS269: 2.65"L x 1.78"W x 1.85"D; depth in wall 1.50" (67.3mm x 45.2mm x 46.9mm; depth in wall 38.1mm)
MCD26, MCD267: 2.65"L x 1.78"W x 1.94"D; depth in wall 1.54" (67.3mm x 45.2mm x 49.3mm; depth in wall 39.1mm)
MCD68: 2.65"L x 1.78"W x 1.75"D; depth in wall 1.35" (67.3mm x 45.2mm x 44.4mm; depth in wall 34.3mm)
MCF8: 2.65"L x 1.78"W x 2.15"D; depth in wall 1.75" (67.3mm x 45.2mm x 54.6mm; depth in wall 44.4mm)

** Advance MK X or equivalent x Switches a dimmable load type

Operation

Dimmer and Multilocation Operation

1 tap = last used level
2 taps = full output
Press and hold = raise light level

1 tap = fade to OFF
Press & hold = reduce light level

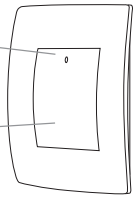

Fan Controller Operation

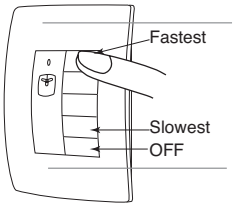

1 tap = Turn ON; resume last used speed
2 taps = Full speed
Press & hold = Increase speed

Tap once = Turn fan OFF
Press & hold = Decrease speed

Ordering Information

Catalog No.	Color	Product Description	Catalog No.	Color	Product Description
☐ MDS246-W	Warm White	Switches	☐ MCD26-W	Warm White	Incandescent
☐ MDS246-A	Light Almond	Single Pole	☐ MCD26-A	Light Almond	Dimmers
☐ MDS246-G	Charcoal Gray		☐ MCD26-G	Charcoal Gray	
☐ MDS248-W	Warm White	Switches	☐ MCD267-W	Warm White	Universal Dimmers
☐ MDS248-A	Light Almond	3-way	☐ MCD267-A	Light Almond	
☐ MDS248-G	Charcoal Gray		☐ MCD267-G	Charcoal Gray	
☐ MDS266-W	Warm White	Lighted Switches	☐ MCD68-W	Warm White	Multilocation
☐ MDS266-A	Light Almond	Single Pole	☐ MCD68-A	Light Almond	Controllers
☐ MDS266-G	Charcoal Gray		☐ MCD68-G	Charcoal Gray	
☐ MDS268-W	Warm White	Lighted Switches	☐ MCF8-W	Warm White	Fan Controllers
☐ MDS268-A	Light Almond	3-way	☐ MCF8-A	Light Almond	
☐ MDS268-G	Charcoal Gray		☐ MCF8-G	Charcoal Gray	
☐ MDS269-W	Warm White	Lighted Switches			
☐ MDS269-A	Light Almond	4-way			
☐ MDS269-G	Charcoal Gray				

* Subject to derating when more than one dimmer is ganged together or when using non-incandescent load types.
See Derating Chart for details.

Pub. No. 18803

2007 CU Solar Decathlon - Lighting Fixture & Control Schedule

TYPE	QUANTITY	MANUFACTURER NAME	MANUFACTURER CATALOG NO.	# OF LAMPS	WATTS/LAMP	LAMP TYPE	TOTAL WATTS	MOUNTING	RECESS DEPTH	VOLTAGE	LOCATION	IMAGE
FIXTURES												
D-A	7	ADREE	DL19MA A30R-120	1	10	10W MR11 / 2-PIN G4	110	RECESSED	4.25"	12	KITCHEN	
D-B	4		DL19BK A30R-120									
F	2	BEGA	L8201/537	2	27	27W TWIN / 4-PIN 2G11	108	WALL	N/A	120	BATHROOM VANITY	
F1	2	BEGA	L8200/537	2	13	13W TWIN / 4-PIN 2GX7	52	WALL	N/A	120	BATHROOM VANITY	
G	5	BEGA	L7162	1	18	18W QUAD / 4-PIN G24q-2	90	WALL	N/A	120	BEDROOM	
H-9	6	PEGASUS LIGHTING	PLED-DL-WW-9	9	0.77	LED	41.58		N/A	120	WATER TANKS / FAT WALL / GARAGE / DECK	
H-15	2		PLED-DL-WW-15	15			23.1					
I	8	SPLASH LIGHT - BRUCK	LEDRA PLUG-IN FLEX	1	3	LED	24	BED HEADBOARD	N/A	120	BEDROOM	
J	2	OLO INSIDE	SECTO SMALL PENDANT - BIRCH	1	10	10W CFL / E26	20	PENDANT	N/A	120	KITCHEN BAR	
J1	1	OLO INSIDE	SECTO SMALL PENDANT - OCTO	1	10	10W CFL / E26	10	PENDANT	N/A	120	BREAKFAST AREA	
K	2	SPLASH LIGHT - FLOS	ARIETTE 1	4	10	10W CFL / E26	80	WALL	N/A	120	LIVING ROOM SOUTH WALL	
L	1	SPLASH LIGHT - ET-2	ORBIT E20013-11	1	40	XENON JC	40	DESK	N/A	120	OFFICE	
M-2	3	CORELITE	CS-SN-1-14T5-1C-120-2'	1	14	F14T5/3000K	42	SURFACE	N/A	120	KITCHEN	
M-4	3	CORELITE	CS-SN-1-28T5-1C-120-4'	1	28	F28T5/3000K	84	SURFACE	N/A	120	KITCHEN	
N-4	2	CORELITE	IW-SP-1-28T5-1D(0-10VOLT)-120-SU-WA-4'-EB	1	28	F28T5/3000K	56	WALL	N/A	120	LIVING ROOM	
N-8	3	CORELITE	IW-SP-1-28T5-1D(0-10VOLT)-120-SU-WA-8'-EB	5	28	F28T5/3000K	420	WALL	N/A	120	LIVING ROOM	
N-20	1	CORELITE	IW-SP-1-28T5-1D(0-10VOLT)-120-SU-WA-20'-EB	5	28	F28T5/3000K	140	WALL	N/A	120	LIVING ROOM	
O	1	PINNACLE	E2A-1T5-20'-FL-120-W-DM(0-10VOLT)	5	28	F28T5/3000K	140	RECESSED	3.30"	120	HALLWAY	
P	3	BEGA	2815P	1	9	9W / 2-PIN G23-2	27	RECESSED	4-3/4"	120	ENTRY	
DX	4	UNILED	UL D	1	0.2	0.2W LED	0.8	RECESSED	2"	120	DECK	
EX	4	BEGA	2955P	2	13	13W / G24q-1	104	EXTERIOR WALL	N/A	120	EXTERIOR DOOR	
PX	1	BEGA	2036P	1	9	9W / 2-PIN G23	9	RECESSED	N/A	120	DECK PLANTERS	
LIGHTING CONTROLS												
LPC	5	WATTSTOPPER	LS-301	N/A	0.72	N/A	0.72	WALL	N/A	24	LIVING ROOM / BEDROOM	
LPP	5	WATTSTOPPER	B120E-P	N/A	N/A	N/A	0	JUNCTION BOX	N/A	24	LIVING ROOM / BEDROOM	
LR1	1	WATTSTOPPER	LSR-301-S	N/A	N/A	N/A	0	WALL	N/A	24	LIVING ROOM	
LR2	1	WATTSTOPPER	LSR-301-P	N/A	N/A	N/A	0	WALL	N/A	24	LIVING ROOM	
LD	1	WATTSTOPPER	MCD267-W	N/A	N/A	N/A	0	WALL	N/A	24	KITCHEN	

CU 189

LOW VOLTAGE ROUGH-INS:
A30R-120, A30R-277

NON-TYPE IC ROUGH-IN FOR REMODELING APPLICATIONS

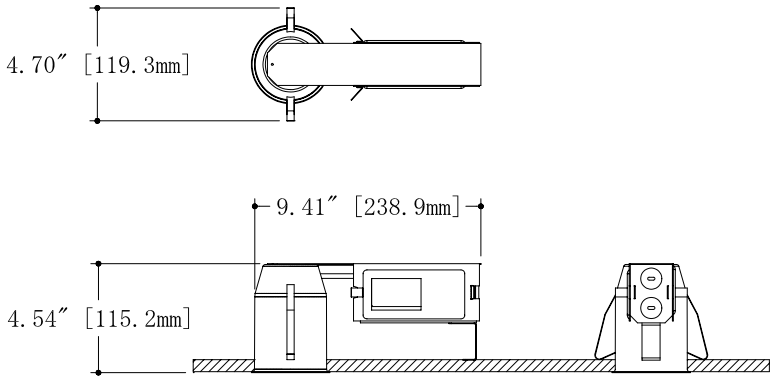

SPECIFICATIONS:

1. **Rough-in Body:** Die formed, galvanized steel
2. **Junction Box:** Galvanized steel, with ½ IP pry-out knock-outs. Rated for thru-branch wiring, 2-in/2-out, No. 12 AWG wire, rated for 90C. Accessible from below ceiling.
3. **Transformer:** Electromagnetic, 12 volt output, class H Insulation.
4. **Thermal Protection:** Integral, Protects from over-lamping and abnormal applications.
5. **Trim Housing: Drawn** aluminum with mounting brackets. 1 1/4" thick ceiling maximum.
6. **Compliances:** UL and cUL Listed for damp locations and for safe use in ceilings without insulation, or where insulation is kept 3" away on all surfaces.
7. **Socket:** Bi-Pin Ceramic, Listed component, Integral wiring terminations.

See selected trim specification sheets for lamp type and maximum wattage ratings.

Ordering Information:

Catalog No.	Cutout Size	Input Voltage	Trims
A30R-120	3"	120 V AC	DL19, DL22, DL23, DL24, DL25, DL43 ASX1, ASX3, ASX5, ASX6, ASX7
A30R-277	3"	277 V AC	DL19, DL22, DL23, DL24, DL25,DL43 ASX1, ASX3, ASX5, ASX6, ASX7

ARDEE LIGHTING INC.
www.ardeelighting.com
A Subsidiary of JJI Lighting Group, Inc.
E-mail: ardee@jjishelby.com
PO Box 1769, 639 Washburn Switch Rd.
Shelby, NC 28151
(704) 482-2811 ¦ Fax (800) 275-1544

Varianti Series
MR11 - DL19 Trim

TYPE: **D-A**

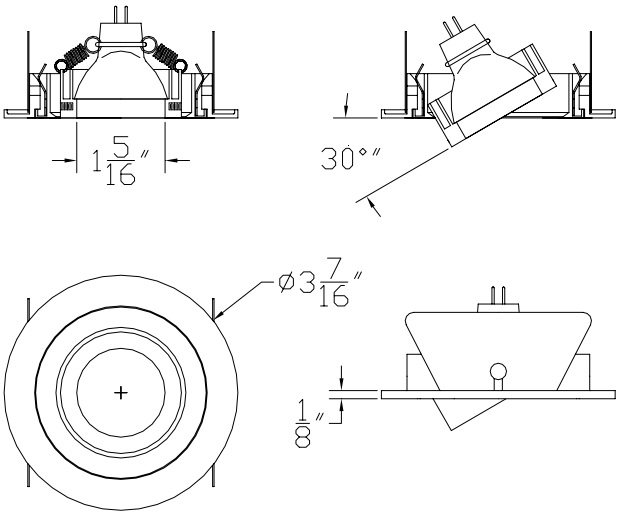

SPECIFICATIONS:

Low voltage adjustable recessed downlight with nominal 3 ½" diameter trim and 1 ¼" diameter aperture.

Trim
- Precision machined, triple ring construction.
- Aluminum base material for painted finishes: White, Black, Metallic Silver.
- Brass base material for plated finishes: Polished Brass, Chrome, Matte Aluminum, Black Nickel.
- Rotating center ring pivots 30 degrees in either direction, capable of utilizing two (2) media accessories in conjunction with one MR11.
- Snap-in / Pull-out center ring assembly provides convenient servicing.

Electrical:
- Socket assembly (ceramic socket and wire lead) snaps directly to lamp pins. Socket assembly supplied with pre-wired rough-in housing. Rough-in ordered separately

Lamping:
- Enclosed MR11, 12volt or open MR11, 12 volt lamp with protective glass lens. 35 watt maximum for non-IC rated rough-in and 35 watt maximum for IC rated rough-in. Lamp provided by others.

Compliances:
- UL and cUL Listed when specified with appropriate A30 Series Rough-in housing. Suitable for use in damp and wet locations.

Ordering Information

Part Number	Color: Plated Finish
DL19WH	White
DL19BK	Black
DL19MS	Metallic Silver

Part Number	Color: Plated Finish
DL19PB	Polished Brass
DL19PC	Polished Chrome
DL19MA	Matte Aluminum
DL19BN	Black Nickel

Use with A30 Series rough-in

Ardee Lighting reserves the right to change product specifications without prior notification.

Ardee Lighting
PO Box 1769 · 639 Washburn Switch Rd · Shelby · NC 28151
T 704. 482.2811 F 800.275.1544 E ardee@jjishelby,com
www.ardeelighting.com

Varianti Series
MR11 - DL19 Trim

TYPE: **D-B**

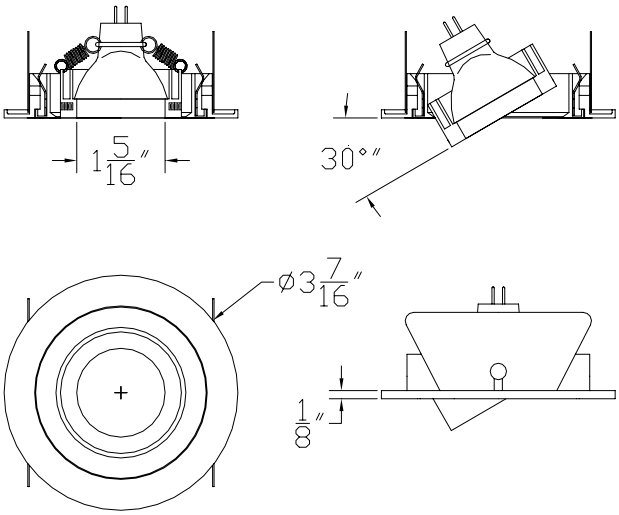

SPECIFICATIONS:

Low voltage adjustable recessed downlight with nominal 3 ½" diameter trim and 1 ¼" diameter aperture.

Trim
- Precision machined, triple ring construction.
- Aluminum base material for painted finishes: White, Black, Metallic Silver.
- Brass base material for plated finishes: Polished Brass, Chrome, Matte Aluminum, Black Nickel.
- Rotating center ring pivots 30 degrees in either direction, capable of utilizing two (2) media accessories in conjunction with one MR11.
- Snap-in / Pull-out center ring assembly provides convenient servicing.

Electrical:
- Socket assembly (ceramic socket and wire lead) snaps directly to lamp pins. Socket assembly supplied with pre-wired rough-in housing. Rough-in ordered separately

Lamping:
- Enclosed MR11, 12volt or open MR11, 12 volt lamp with protective glass lens. 35 watt maximum for non-IC rated rough-in and 35 watt maximum for IC rated rough-in. Lamp provided by others.

Compliances:
- UL and cUL Listed when specified with appropriate A30 Series Rough-in housing. Suitable for use in damp and wet locations.

Ordering Information

Part Number	Color: Plated Finish
DL19WH	White
DL19BK	Black
DL19MS	Metallic Silver

Part Number	Color: Plated Finish
DL19PB	Polished Brass
DL19PC	Polished Chrome
DL19MA	Matte Aluminum
DL19BN	Black Nickel

Use with A30 Series rough-in

Ardee Lighting reserves the right to change product specifications without prior notification.

Ardee Lighting
PO Box 1769 · 639 Washburn Switch Rd · Shelby · NC 28151
T 704. 482.2811 F 800.275.1544 E ardee@jjishelby,com
www.ardeelighting.com

LIMBURG Collection

Type: **F**
LIMBURG Product #:
Project:
Voltage:

Luminaire mounts to the wall over a custom BEGA 537 recessed box. This box can be shipped ahead of the luminaire.

Wall luminaires · Linear

Material: Housing constructed of polished brass with a nickel plating to simulate a stainless steel finish (L8203/537), polished brass with a chrome plating (L8201/537), or brass with a painted white RAL 9010 finish (L8199/537). Wall bracket constructed of extruded aluminum with a nickel plating to simulate a stainless steel finish (L8203/537), with a chrome plating (L8201/537), or with a painted white RAL 9010 finish (L8199/537).

Glass: Two, hand blown, three-ply opal glass elements with screw neck.

Electrical: Two (2) 27W twin 4-pin 2G11 base compact fluorescent lamps (by others). 2G11 4-pin sockets and electronic ballast, 120V or 277V – specify.

Installation: Mounts directly to the wall over a custom BEGA 537 recessed box. This box can be shipped ahead of the luminaire.

U.L. listed, suitable for damp locations.

Please note: A space of approximately 13" must be provided above or at the side of the luminaire to allow relamping

s/steel finish	chrome	white	lamp	lumen	A	B	C
L8203/537	**L8201/537**	**L8199/537**	2 27 W CF twin-4p	3600	36¼	3⅛	4⅜

BEGA/US
1000 BEGA Way, Carpinteria, CA 93013 (805)684-0533 FAX (805)566-9474

Revised 4/06

LIMBURG Collection

Type: **F1**
LIMBURG Product #:
Project:
Voltage:

Luminaire mounts to the wall over a custom BEGA 537 recessed box. This box can be shipped ahead of the luminaire.

Wall luminaires · Linear

Material: Housing constructed of polished brass with a nickel plating to simulate a stainless steel finish (L8202/537), polished brass with a chrome plating (L8200/537), or brass with a painted white RAL 9010 finish (L8198/537). Wall bracket constructed of extruded aluminum with a nickel plating to simulate a stainless steel finish (L8202/537), with a chrome plating (L8200/537), or with a painted white RAL 9010 finish (L8198/537).

Glass: Two, hand blown, three-ply opal glass elements with screw neck.

Electrical: Two (2) 13W twin 4-pin 2GX7 base compact fluorescent lamps (by others). 2GX7 4-pin sockets and electronic ballast, 120V or 277V – specify.

Installation: Mounts directly to the wall over a custom BEGA 537 recessed box. This box can be shipped ahead of the luminaire.

U.L. listed, suitable for damp locations.

Please note: A space of approximately 9" must be provided above or at the side of the luminaire to allow relamping

s/steel finish	chrome	white	lamp	lumen	A	B	C
L8202/537	**L8200/537**	**L8198/537**	2 13 W CF twin-4p	1600	25¼	2⅜	3½

BEGA/US
1000 BEGA Way, Carpinteria, CA 93013 (805)684-0533 FAX (805)566-9474

LIMBURG Collection

Type: **G**
LIMBURG Product #:
Project:
Voltage:

The luminaires should be installed either vertically or horizontally over a single gang switch box (by others).

Wall luminaires · direct/indirect

Material: Housing constructed of stainless steel (L7610) with a #4 brushed finish, polished brass with chrome (L7162) plating, polished brass (L7161), or aluminum with a painted white RAL 9010 (L7160) finish. Backplate constructed of white painted tin plate.

Glass: Hand blown, three-ply opal glass.

Electrical: One (1) 18W quad 4-pin G24q-2 base compact fluorescent lamp (by others). G24q-2 4-pin socket and electronic ballast, 120V or 277V – specify.

Installation: Mounts directly to the wall either vertically or horizontally over a single gang switch box (by others).

Optional: Consult factory to be supplied with punched numbers or letters, as indication or location luminaires.

U.L. listed, suitable for damp locations.

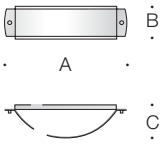

s/steel	chrome	brass	white	lamp		lumen	A	B	C
L7610	**L7162**	**L7161**	**L7160**	1	18 W CF quad-4p	1250	10¼	3⅛	4½

BEGA/US
1000 BEGA Way, Carpinteria, CA 93013 (805)684-0533 FAX (805)566-9474

Cool White LED Rope Light

Cool White LED Rope Light Pegasus Associates Lighting has 7 lengths of 120-volt LED rope light using cool white LEDs.

More Images (Pop-Up)

Cool White LED Rope Light

DESCRIPTION

- **Many Uses**: ideal for lighting building outlines, amusement themes, store window displays, holiday light sculptures, cove lighting, toe space lighting, museum lighting, architectural details, over cabinet lighting, step lights, bookshelves, deck railings, gazebos, trade show lighting, bars, and night clubs

ROPE

- **7 Lengths**: 3ft, 6ft. 9ft, 15ft, 18ft, 30ft, 75ft
- **Diameter**: rope light is 0.50in in diameter; threaded coupler used to connect two pieces of rope light together or connect an end cap to a piece of rope is 1-1/8in in diameter
- **Brighter than Incandescent**: the LED rope light provides 6.4 lumens/ft
- **Very Flexible**
- **Very Low Heat**: LEDs generate very little heat
- **Easy to Install**: easy to install with mounting clips. Several clear, U-shaped, plastic mounting clips with 2 screws each are included with each kit.
- **Field Cuttability**: rope light is ***no longer field cuttable*** due to the most recent UL 2388 standards. However, to make longer runs several lengths of rope light may be easily connected using molded male and female ends that are held together with a threaded coupler, all of which are supplied. (See Linkable comments below.)

LEDs

- **Cool White LEDs**: cool white LEDs, with a color temperature of about 6000K, are used (very slightly bluish in color compared to warm white LEDs but very definitely white when compared to blue LEDs). An LED (light emitting diode) is a solid state electronic component that emits light when electricity is passed through it.
- **Excellent Lamp Life**: rated life of each LED is 60,000 hours on average while the miniature incandescent light bulbs used in the incandescent clear rope light each have a rated life of 25,000 hours on average. Because the LEDs are completely encased in the solid plastic rope, a very dim LED cannot be replaced at a later time.
- **Lamp Spacing**: 1.0 inch apart

ELECTRICAL FEATURES

- **Line Voltage**: 120 volts; ***no*** transformer is required
- **Cord & Plug**: 5ft SJT power cord & 2-prong, polarized, fused plug
- **Very Energy Efficient**: only consumes 0.77 watts per foot
- **Linkable**: several lengths may be easily linked together using the threaded couplers that are supplied with each kit up to a total length of 240 feet. For example, one 18-foot length of rope light and one 30-foot length of rope light may be easily put together to form a 48-foot length of rope light, two 30-foot lengths may be combined to create a 60-foot length of rope light, and so on. However, the cool white LED rope light kits may ***not*** be linked to the warm white LED rope light kits or the incandescent rope light kits.
- **Not Dimmable**: this LED cool white rope light is ***not*** dimmable
- **Indoor and Outdoor Use**: UL listed for indoor ***and*** outdoor use
- **Not Under Water**: should ***not*** be used under water
- **UL 2388 Listed**: UL 2388 contains the most recent stringent UL standards and,

Type: I

CU
197

BRUCK.

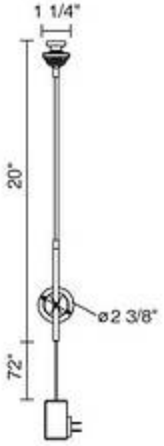

LEDRA™ PLUG-IN FLEX

Description:
The Ledra Plug-In Flex is a flexible hose display fixture. The small size, long life, lack of UV, and cool beam allows for a wide variety of applications.

Technical Specs:
Finish: matte chrome
Power consumption: 3Watts
Drive current: 700mA
Lumen output: 65 at 700mA
Lamp life: white 70% at 50,000
Rating: Class II
5500 White with Luxeon III Star LED
3200 Warm White with Z- Power LED

Part Numbers:

135781/s	white, 10° lens
135781/m	white, 30° lens
135781/fl	white, 45° lens
135781-1/s	warm white, 10°lens
135781-1/m	warm white, 30°lens
135781-1/fl	warm white, 45°ens

15774 Gateway Circle Tustin, CA 92780 ph: (714) 259-9959 fax: (714) 259-9969 www.brucklighting.com

Type: **J**

collections

- ht collection
- secto design
- starline fire
- durat
- verso design
- woodnotes

secto design

- floor
- table
- wall
- pendant
  - octo
  - secto
  - victo

large

diameter: 11 $^{13}/_{16}$″

shade height: 23 $^{5}/_{8}$″

small

diameter: 9 $^{7}/_{8}$″

shade height: 17 $^{3}/_{4}$″

p 303.444.7929 • **f** 303.555.1212 • 2020 20th st • boulder, co 80302 • info@oloinside.com

Type: **J1** CU 199

OLO inside
innovation design sustainability

collections

- ht collection
- secto design
- starline fire
- durat
- verso design
- woodnotes

secto design

- floor
- table
- wall
- pendant
  - octo
  - secto
  - victo

diameter: 21 $^{1}/_{4}$"

shade height: 26 $^{3}/_{4}$"

| olo | | showroom | | news | | contact |

CU 199

Ariette 1 Wall/Ceiling Mount by Flos

by Flos

The Ariette Wall/Ceiling Mount Fixture provides general ambient light and features diffused light through two synthetic fabric squares, which are stretched over fiberglass rods that are held taut with injection molded fittings, and the diffusers rotate on a central mounting assembly. Four 40 Watt 120 Volt Opal A-19 Incandescent lamps (not included). This fixture can be either ceiling or wall mounted. Also available with Compact Fluorescent lamping and in larger sizes. Designed by Tobia Scarpa in 1973. Made in Italy. [more]

Details - Dimensions

The Ariette Wall/Ceiling Mount Fixture provides general ambient light and features diffused light through two synthetic fabric squares, which are stretched over fiberglass rods that are held taut with injection molded fittings, and the diffusers rotate on a central mounting assembly. Four 40 Watt 120 Volt Opal A-19 Incandescent lamps (not included). This fixture can be either ceiling or wall mounted. Also available with Compact Fluorescent lamping and in larger sizes. Designed by Tobia Scarpa in 1973. Made in Italy.

Dimensions:
Fixture: Width 31.2 in., Length 31.2 in.
Projection: Depth 7.8 in.

Brushed Nickel Arc Desk Lamp

This arc desk lamp with a frosted glass shade is anything but typical. Combines the functionality of a lamp with a sleek, contemporary design. Also has an on/off switch on the cord.

Key Features

- Brushed nickel finish.
- On/off switch.
- Includes one 40 watt halogen bulb.
- 20" high.
- 9" diameter base.
- Shade is 4" long and 3 1/2" wide.

About ET2

The ET2 brand comes from the Maxim Group Company. A relative newcomer to the lighting industry, ET2 is quickly developing a reputation for bold and exciting design. Their innovative table lamps and desk lamps all have a daring, contemporary look inspired by cutting-edge European lamp designs. These pieces are ideal for taking your décor in a stylish new contemporary direction.

DESCRIPTION

Corelite's small scale Cove Solo is an asymmetric lighting solution for the interior environment that offers flexibility in application and installation. The Cove Solo optimizes 1T5 performance and efficiency with an engineered optical system, which produces a smooth even gradient of light across the illuminated surface. This luminaire is ideal to accent architectural details or simply create an ambient layer of the illumination.

		Type
Catalog #		M-2
Project		
Comments		Date
Prepared by		

SPECIFICATION FEATURES

A ... Construction
Housing one piece die-formed 20-gauge corrosion resistant steel forming a 1-1/2" deep ballast channel. Standard 2'-0", 3'-0", 4'-0" and 8'-0" fixture lengths combine for continuous rows.

B ... Reflectors
Die-formed reflectors are highly specular anodized aluminum.

C ... Electrical
Fixtures are prewired with quick wire connectors and use UL listed Class P, T5HO program rapid start universal voltage electronic ballasts. Power factor of 97% with less than 10% THD. Fixtures and electrical components certified to UL and CUL standards.

D ... Finish
Reflector pans are anodized aluminum. Ballast channels are corrosion resistant steel.

Mounting
Fixture mounts directly to architectural cove or to wall structure. Refer to installation section for details.

Cove Solo

1T5HO

Architectural Cove
Asymmetric Indirect

Light Distribution
Indirect - 100.0%
Direct - 0.0%

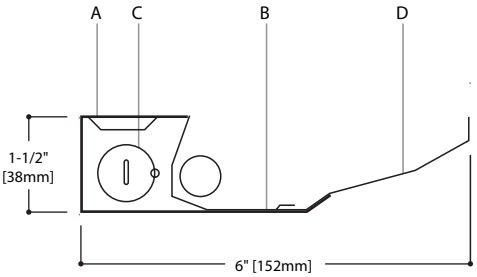

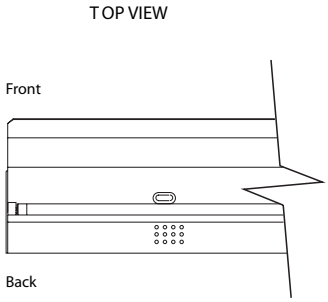

MODULES AND DIMENSIONS

22-3/8" [568mm]

34-1/8" [867mm]

46" [1168mm]

92" [2337mm]

Front Mount	Degree of Lift	Back Mount
1 1/2 x 6	0 (Standard)	1 1/2 x 6
2 x 6	5	1 7/8 x 6 1/8
2 1/2 x 6	10	2 1/8 x 6 1/4
3 x 5 3/4	15	2 1/2 x 6 1/4
3 1/2 x 5 5/8	20	2 3/4 x 6 1/8
3 7/8 x 5 1/2	25	3 x 6
4 1/4 x 5 1/4	30	3 3/8 x 6

plus 5 aiming system™

ORDERING INFORMATION

Sample Number: CS-SN-1T5-1Y-277-04

CS	S	N	1	14W T5	1	C	120	2'	

Series
CS= Cove Solo

Optics Up
S= Specular

Optics Down
N= None

Number of Lamps
1= 1 Lamp

Lamp Type
14W T5

Number of Circuits [1]
1= 1 Circuit

Wiring [1]
C= Standard Circuit
D= Dimming
E= Emergency
B= Battery Pack
T= Nightlight
Y= Daylight

Voltage [1]
120= 120V
277= 277V
347= 347V
UNV= Universal (120V-277V)

Run Length
Individually Mounted
Luminaires may be 2', 3', 4' or 8' in length
Continuously Mounted
Standard row configurations over 8' consist of 4' and 8' sections. 2' and 3' sections will be used for row lengths other than in 4' increments

Options
P5= Plus 5 Aiming System(tm)

Notes: 1 Not all options available. Please consult your Cooper Lighting Representative for availability. Specifications and dimensions subject to change without notice.

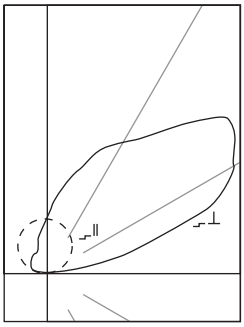

CS-SN-1T5
(1) FP54/835/HO
4500 Lumens

Efficiency 84.2%

Test Report
#ITL55922-2

Coefficients of Utilization

Effective floor cavity reflectance 20%

rc	80%				70%				50%			30%			10%			0%
rw	70	50	30	10	70	50	30	10	50	30	10	50	30	10	50	30	10	0
RCR																		
0	80	80	80	80	69	69	69	69	47	47	47	27	27	27	09	09	09	00
1	73	70	67	64	62	60	57	55	41	39	38	23	23	22	08	07	07	00
2	66	61	56	52	56	52	48	45	36	33	31	21	19	18	07	06	06	00
3	60	53	48	43	51	46	41	37	31	28	26	18	17	15	06	05	05	00
4	55	47	41	36	47	40	35	31	28	25	22	16	14	13	05	05	04	00
5	50	41	35	31	43	36	30	27	25	21	19	14	13	11	05	04	04	00
6	46	37	31	26	39	32	27	23	22	19	16	13	11	10	04	04	03	00
7	42	33	27	23	36	28	23	20	20	16	14	11	10	08	04	03	03	00
8	39	30	24	20	33	26	21	17	18	14	12	10	09	07	03	03	02	00
9	36	27	21	17	31	23	18	15	16	13	11	09	08	06	03	02	02	00
10	34	24	19	15	29	21	16	13	15	12	09	09	07	06	03	02	02	00

Zonal Lumen Summary

Zone	Lumens	%Lamp	%Fixture
0-30	0	0	0
0-40	0	0	0
0-60	0	0	0
0-90	2	0	.10
90-120	1403	31.90	37.90
90-130	2152	48.90	58.10
90-150	3190	72.50	58.10
90-180	3702	84.10	99.90
0-180	3705	84.20	100.00

Candela

Angle	Along II	45°	Across ⊥
180	543	543	543
175	630	599	545
170	785	695	537
165	952	801	526
160	1128	914	510
155	1325	1015	488
150	1460	1140	463
145	1577	1246	434
140	1785	1299	400
135	2083	1358	364
130	2348	1468	326
125	2248	1649	284
120	2124	1757	241
115	1902	1595	195
110	1464	1438	153
105	988	1069	107
100	543	594	63
95	60	188	24
90	0	16	0

COMMON CIRCUIT CONFIGURATIONS FOR ONE LAMP WALL MOUNT FIXTURES

1C=Single circuit luminaire
1E=Single circuit luminaire with emergency circuit
1B=Single circuit luminaire with battery pack

/1/ =Circuit 1
/E/ =Emergency Circuit
/B/ =Battery Circuit

P =Power Mount
NP =Non-Power Mount

1C

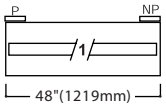

1E

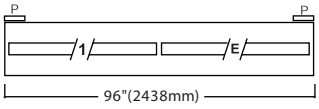

1B

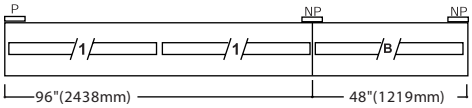

STANDARD ROW CONFIGURATIONS (2' and 3' sections will be used for row lengths other than in 4' increments)

FIXTURE LENGTH	4'	8'	12'	16'	20'	24'	28'	32'	36'	40'	44'	48'	52'	56'	60'	64'	68'	72'	76'	80'	84'	88'	92'	96'	100'	104'	108'
4'	1		1		1		1		1		1		1		1		1		1		1		1		1		1
8'		1	1	2	2	3	3	4	4	5	5	6	6	7	7	8	8	9	9	10	10	11	11	12	12	13	13

DESCRIPTION

Corelite's small scale Cove Solo is an asymmetric lighting solution for the interior environment that offers flexibility in application and installation. The Cove Solo optimizes 1T5 performance and efficiency with an engineered optical system, which produces a smooth even gradient of light across the illuminated surface. This luminaire is ideal to accent architectural details or simply create an ambient layer of the illumination.

		Type
Catalog #		M-4
Project		
Comments		Date
Prepared by		

SPECIFICATION FEATURES

A ... Construction
Housing one piece die-formed 20-gauge corrosion resistant steel forming a 1-1/2" deep ballast channel. Standard 2'-0", 3'-0", 4'-0" and 8'-0" fixture lengths combine for continuous rows.

B ... Reflectors
Die-formed reflectors are highly specular anodized aluminum.

C ... Electrical
Fixtures are prewired with quick wire connectors and use UL listed Class P, T5HO program rapid start universal voltage electronic ballasts. Power factor of 97% with less than 10% THD. Fixtures and electrical components certified to UL and CUL standards.

D ... Finish
Reflector pans are anodized aluminum. Ballast channels are corrosion resistant steel.

Mounting
Fixture mounts directly to architectural cove or to wall structure. Refer to installation section for details.

Cove Solo

1T5HO

Architectural Cove
Asymmetric Indirect

Light Distribution
Indirect - 100.0%
Direct - 0.0%

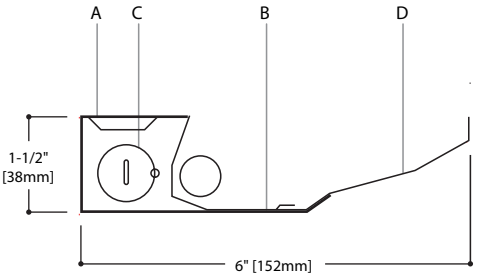

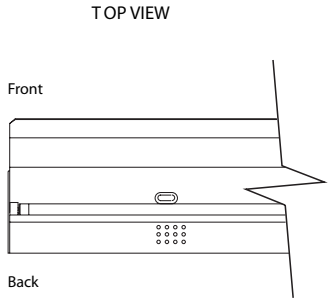

MODULES AND DIMENSIONS

22-3/8" [568mm]

34-1/8" [867mm]

46" [1168mm]

92" [2337mm]

Front Mount	Degree of Lift	Back Mount
1 1/2 x 6	0 (Standard)	1 1/2 x 6
2 x 6	5	1 7/8 x 6 1/8
2 1/2 x 6	10	2 1/8 x 6 1/4
3 x 5 3/4	15	2 1/2 x 6 1/4
3 1/2 x 5 5/8	20	2 3/4 x 6 1/8
3 7/8 x 5 1/2	25	3 x 6
4 1/4 x 5 1/4	30	3 3/8 x 6

plus 5 aiming system™

ORDERING INFORMATION

Sample Number: CS-SN-1T5-1Y-277-04

CS	S	N	1	28W T5	1	C	120	4'	

Series
CS= Cove Solo

Optics Up
S= Specular

Optics Down
N= None

Number of Lamps
1= 1 Lamp

Lamp Type
28W T5

Number of Circuits [1]
1= 1 Circuit

Wiring [1]
C= Standard Circuit
D= Dimming
E= Emergency
B= Battery Pack
T= Nightlight
Y= Daylight

Voltage [1]
120= 120V
277= 277V
347= 347V
UNV= Universal (120V-277V)

Run Length
Individually Mounted
Luminaires may be 2', 3', 4' or 8' in length
Continuously Mounted
Standard row configurations over 8' consist of 4' and 8' sections. 2' and 3' sections will be used for row lengths other than in 4' increments

Options
P5= Plus 5 Aiming System(tm)

Notes: 1 Not all options available. Please consult your Cooper Lighting Representative for availability. Specifications and dimensions subject to change without notice.

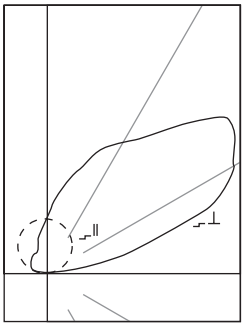

CS-SN-1T5
(1) FP54/835/HO
4500 Lumens

Efficiency 84.2%

Test Report
#ITL55922-2

Coefficients of Utilization

Effective floor cavity reflectance 20%

rc	80%				70%				50%			30%			10%			0%
rw	70	50	30	10	70	50	30	10	50	30	10	50	30	10	50	30	10	0
RCR																		
0	80	80	80	80	69	69	69	69	47	47	47	27	27	27	09	09	09	00
1	73	70	67	64	62	60	57	55	41	39	38	23	23	22	08	07	07	00
2	66	61	56	52	56	52	48	45	36	33	31	21	19	18	07	06	06	00
3	60	53	48	43	51	46	41	37	31	28	26	18	17	15	06	05	05	00
4	55	47	41	36	47	40	35	31	28	25	22	16	14	13	05	05	04	00
5	50	41	35	31	43	36	30	27	25	21	19	14	13	11	05	04	04	00
6	46	37	31	26	39	32	27	23	22	19	16	13	11	10	04	04	03	00
7	42	33	27	23	36	28	23	20	20	16	14	11	10	08	04	03	03	00
8	39	30	24	20	33	26	21	17	18	14	12	10	09	07	03	03	02	00
9	36	27	21	17	31	23	18	15	16	13	11	09	08	06	03	02	02	00
10	34	24	19	15	29	21	16	13	15	12	09	09	07	06	03	02	02	00

Zonal Lumen Summary

Zone	Lumens	%Lamp	%Fixture
0-30	0	0	0
0-40	0	0	0
0-60	0	0	0
0-90	2	0	.10
90-120	1403	31.90	37.90
90-130	2152	48.90	58.10
90-150	3190	72.50	58.10
90-180	3702	84.10	99.90
0-180	3705	84.20	100.00

Candela

Angle	Along II	45°	Across ⊥
180	543	543	543
175	630	599	545
170	785	695	537
165	952	801	526
160	1128	914	510
155	1325	1015	488
150	1460	1140	463
145	1577	1246	434
140	1785	1299	400
135	2083	1358	364
130	2348	1468	326
125	2248	1649	284
120	2124	1757	241
115	1902	1595	195
110	1464	1438	153
105	988	1069	107
100	543	594	63
95	60	188	24
90	0	16	0

COMMON CIRCUIT CONFIGURATIONS FOR ONE LAMP WALL MOUNT FIXTURES

1C=Single circuit luminaire
1E=Single circuit luminaire with emergency circuit
1B=Single circuit luminaire with battery pack

/1/ =Circuit 1
/E/ =Emergency Circuit
/B/ =Battery Circuit

P =Power Mount
NP =Non-Power Mount

1C

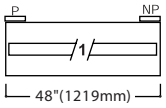

1E

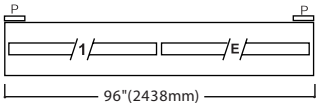

1B

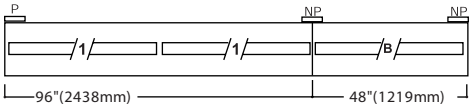

STANDARD ROW CONFIGURATIONS (2' and 3' sections will be used for row lengths other than in 4' increments)

FIXTURE LENGTH	4'	8'	12'	16'	20'	24'	28'	32'	36'	40'	44'	48'	52'	56'	60'	64'	68'	72'	76'	80'	84'	88'	92'	96'	100'	104'	108'
4'	1		1		1		1		1		1		1		1		1		1		1		1		1		1
8'		1	1	2	2	3	3	4	4	5	5	6	6	7	7	8	8	9	9	10	10	11	11	12	12	13	13

DESCRIPTION

Corelite's Iridium Perf Wall Mount is a semi-indirect fluorescent luminaire that features elegant styling with a sleek profile and end caps. The engineered optical system provides an asymmetric forward throw distribution. The Iridium Perf Wall may be mounted over standard 2"x4" J-Boxes for individual or continuous configurations using 4'and 8' modular sections. The Iridium Perf Wall is suited for open office perimeters, private offices, conference rooms, corridors and public spaces.

		Type
Catalog #		N-4
Project		
Comments		Date
Prepared by		

SPECIFICATION FEATURES

A ... Construction
Housing is one piece die-formed cold rolled steel, forming a 7"x 2-1/2" architectural profile. Standard 4'-0" and 8'-0" fixture lengths combine for continuous runs.

B ... End Caps
Standard Straight and optional Beveled end caps are precision die-cast aluminum mechanically attached without exposed fasteners.

C ... Reflectors
Die-formed reflectors are highly specular anodized aluminum.

D ... Electrical
Fixtures are prewired with quick wire connectors and use UL listed Class P, T5HO program rapid start universal voltage electronic ballasts. Power factor of 97% with less than 10% THD. Fixtures and electrical components certified to UL and CUL standards.

E ... Finish
Fixture housings are standard white using electrostatically applied polyester powder coat paint.

F ... Mounting
Fixture mounts directly to existing structure over a 2" x 4" standard electrical box mounted horizontally into the wall. Refer to installation section for details.

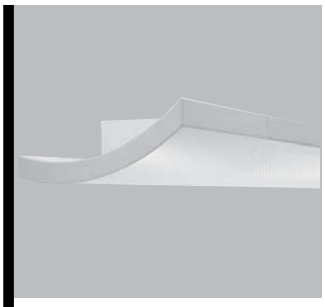

Iridium

PERF WALL
1T5HO

WALL MOUNT
SEMI - INDIRECT

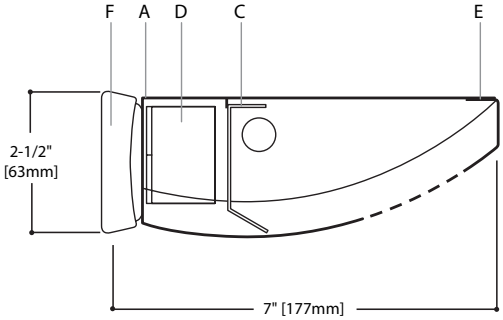

Standard Straight End Cap

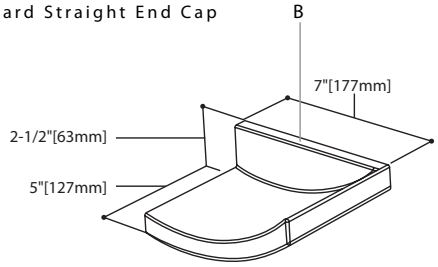

Beveled End Cap

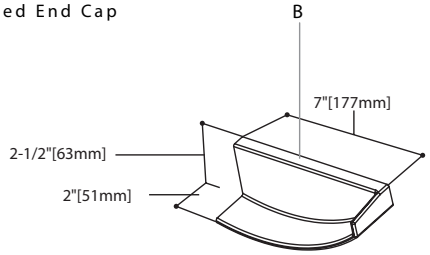

Light Distribution

Indirect - 94.6%
Direct - 5.4%

MODULES AND DIMENSIONS*

48" [1219mm]

96" [2438mm]

*Dimensions do not include end caps.

ORDERING INFORMATION

Sample Number: IW-SP-1T5-1Y-277-SU-WA-04

IW	S	P	1	28W T5	1	D(0-10)	120	SU-WA	4'	EB

Series
IW: Iridium Perf Wall Mount

Optics Up
S: Specular

Optics Down
P: Round Perf

Number of Lamps
1: 1 Lamp

Lamp Type
28W T5

Number of Circuits [1]
1: 1 Circuit

Wiring [1]
C: Standard Circuit
D: Dimming
E: Emergency
B: Battery Pack
T: Nightlight
Y: Daylight

Voltage [1]
120: 120V
277: 277V
347: 347V
UNV: Universal (120V-277V)

Suspension
SU-WA: Surface/Wall Mount

Run Length
Individually Mounted
Luminaires may be 4' or 8' in length
Continuously Mounted
Standard row configurations over 8' consist of 4' and 8' sections

Options
ES: Straight End Cap (Provided if none specified)
EB: Beveled End Cap

Notes: 1 Not all options available. Please consult your Cooper Lighting Representative for availability. Specifications and dimensions subject to change without notice.

PHOTOMETRICS

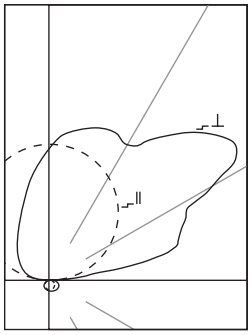

IW-SP-1T5
(1) FP54/841/HO
4500 Lumens

Efficiency 73.5%

Test Report
#LSI16233

Coefficients of Utilization

Effective floor cavity reflectance 20%

rc	80%				70%				50%			30%			10%			0%
rw	70	50	30	10	70	50	30	10	50	30	10	50	30	10	50	30	10	0
RCR																		
0	71	71	71	71	61	61	61	61	43	43	43	26	26	26	11	11	11	04
1	64	62	59	56	56	53	51	48	37	36	35	23	22	22	10	10	09	03
2	59	53	49	46	50	46	43	40	33	31	29	20	19	18	09	08	08	03
3	53	47	42	38	46	41	37	33	29	26	24	18	17	15	08	07	07	02
4	49	41	36	32	42	36	31	28	25	23	20	16	14	13	07	06	06	02
5	45	36	31	27	38	32	27	24	23	20	17	14	12	11	06	05	05	02
6	41	33	27	23	35	28	24	20	20	17	15	13	11	09	05	05	04	01
7	38	29	24	20	32	25	21	18	18	15	13	11	09	08	05	04	04	01
8	35	26	21	17	30	23	18	15	16	13	11	10	08	07	04	04	03	01
9	32	24	19	15	27	21	16	13	15	12	10	09	07	06	04	03	03	01
10	30	21	17	13	26	19	15	12	13	11	09	08	07	05	04	03	02	01

Candela

Angle	Along II	45º	Across ⊥
0	59	59	59
5	58	61	63
15	55	66	72
25	51	68	77
35	42	63	80
45	35	63	76
55	23	54	68
65	12	45	58
75	5	30	46
85	0	14	26
90	0	9	18
95	35	160	82
105	188	582	815
115	347	991	920
125	487	1023	1412
135	606	915	1309
145	702	912	1073
155	776	968	1011
165	826	947	988
175	851	900	918
180	842	842	842

Zonal Lumen Summary

Zone	Lumens	%Lamp	%Fixture
0-30	46	1.03	1.40
0-40	75	1.68	2.28
0-60	133	2.97	4.05
0-90	179	36.99	5.43
40-90	104	2.32	3.15
60-90	45	1.02	1.39
90-180	3126	69.48	94.57
0-180	3306	73.47	100.00

Luminance Data

Angle in Deg	0-Deg cd/sm	45-Deg cd/sm	90-Deg cd/sm
45	871	1190	1296
55	706	1121	1285
65	500	1125	1232
75	640	913	1126
85	0	559	784

COMMON CIRCUIT CONFIGURATIONS FOR ONE LAMP WALL MOUNT FIXTURES

1C =Single circuit luminaire
1E =Single circuit luminaire with emergency circuit
1B =Single circuit luminaire with battery pack

/1/ =Circuit 1
/E/ =Emergency Circuit
/B/ =Battery Circuit

P =Power Mount
NP =Non-Power Mount

1C

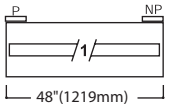

1E

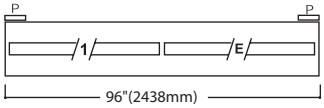

1B

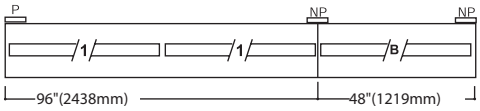

STANDARD ROW CONFIGURATIONS

FIXTURE LENGTH	4'	8'	12'	16'	20'	24'	28'	32'	36'	40'	44'	48'	52'	56'	60'	64'	68'	72'	76'	80'	84'	88'	92'	96'	100'	104'	108'
4'	1		1		1		1		1		1		1		1		1		1		1		1		1		1
8'		1	1	2	2	3	3	4	4	5	5	6	6	7	7	8	8	9	9	10	10	11	11	12	12	13	13

DESCRIPTION

Corelite's Iridium Perf Wall Mount is a semi-indirect fluorescent luminaire that features elegant styling with a sleek profile and end caps. The engineered optical system provides an asymmetric forward throw distribution. The Iridium Perf Wall may be mounted over standard 2"x4" J-Boxes for individual or continuous configurations using 4'and 8' modular sections. The Iridium Perf Wall is suited for open office perimeters, private offices, conference rooms, corridors and public spaces.

		Type
Catalog #		N-8
Project		
Comments		Date
Prepared by		

SPECIFICATION FEATURES

A ... Construction
Housing is one piece die-formed cold rolled steel, forming a 7"x 2-1/2" architectural profile. Standard 4'-0" and 8'-0" fixture lengths combine for continuous runs.

B ... End Caps
Standard Straight and optional Beveled end caps are precision die-cast aluminum mechanically attached without exposed fasteners.

C ... Reflectors
Die-formed reflectors are highly specular anodized aluminum.

D ... Electrical
Fixtures are prewired with quick wire connectors and use UL listed Class P, T5HO program rapid start universal voltage electronic ballasts. Power factor of 97% with less than 10% THD. Fixtures and electrical components certified to UL and CUL standards.

E ... Finish
Fixture housings are standard white using electrostatically applied polyester powder coat paint.

F ... Mounting
Fixture mounts directly to existing structure over a 2" x 4" standard electrical box mounted horizontally into the wall. Refer to installation section for details.

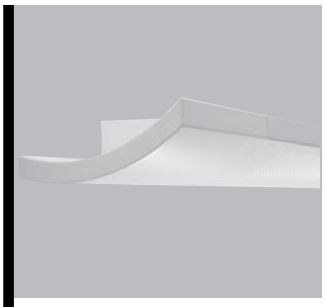

Iridium

PERF WALL
1T5HO

WALL MOUNT
SEMI - INDIRECT

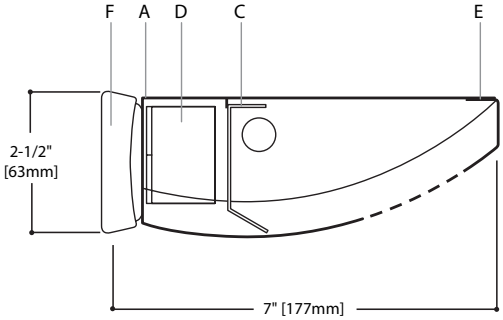

Standard Straight End Cap

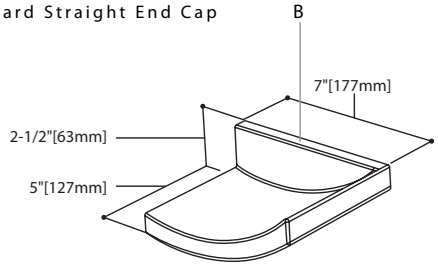

Beveled End Cap

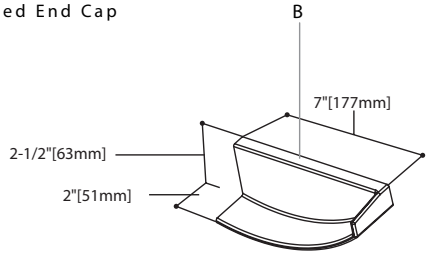

Light Distribution

Indirect - 94.6%
Direct - 5.4%

MODULES AND DIMENSIONS*

48" [1219mm]

96" [2438mm]

*Dimensions do not include end caps.

ORDERING INFORMATION

Sample Number: IW-SP-1T5-1Y-277-SU-WA-04

IW	S	P	1	28W T5	1	D(0-10)	120	SU-WA	8'	EB

Series
IW: Iridium Perf Wall Mount

Optics Up
S: Specular

Optics Down
P: Round Perf

Number of Lamps
1: 1 Lamp

Lamp Type
28W T5

Number of Circuits [1]
1: 1 Circuit

Wiring [1]
C: Standard Circuit
D: Dimming
E: Emergency
B: Battery Pack
T: Nightlight
Y: Daylight

Voltage [1]
120: 120V
277: 277V
347: 347V
UNV: Universal (120V-277V)

Suspension
SU-WA: Surface/Wall Mount

Run Length
Individually Mounted
Luminaires may be 4' or 8' in length
Continuously Mounted
Standard row configurations over 8' consist of 4' and 8' sections

Options
ES: Straight End Cap (Provided if none specified)
EB: Beveled End Cap

Notes: 1 Not all options available. Please consult your Cooper Lighting Representative for availability. Specifications and dimensions subject to change without notice.

PHOTOMETRICS

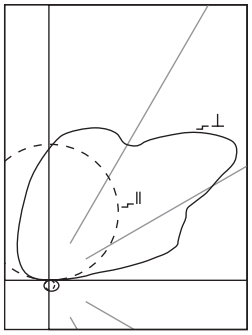

IW-SP-1T5
(1) FP54/841/HO
4500 Lumens

Efficiency 73.5%

Test Report
#LSI16233

Coefficients of Utilization

Effective floor cavity reflectance 20%

rc	80%				70%				50%			30%			10%			0%
rw	70	50	30	10	70	50	30	10	50	30	10	50	30	10	50	30	10	0
RCR																		
0	71	71	71	71	61	61	61	61	43	43	43	26	26	26	11	11	11	04
1	64	62	59	56	56	53	51	48	37	36	35	23	22	22	10	10	09	03
2	59	53	49	46	50	46	43	40	33	31	29	20	19	18	09	08	08	03
3	53	47	42	38	46	41	37	33	29	26	24	18	17	15	08	07	07	02
4	49	41	36	32	42	36	31	28	25	23	20	16	14	13	07	06	06	02
5	45	36	31	27	38	32	27	24	23	20	17	14	12	11	06	05	05	02
6	41	33	27	23	35	28	24	20	20	17	15	13	11	09	05	05	04	01
7	38	29	24	20	32	25	21	18	18	15	13	11	09	08	05	04	04	01
8	35	26	21	17	30	23	18	15	16	13	11	10	08	07	04	04	03	01
9	32	24	19	15	27	21	16	13	15	12	10	09	07	06	04	03	03	01
10	30	21	17	13	26	19	15	12	13	11	09	08	07	05	04	03	02	01

Candela

Angle	Along II	45º	Across ⊥
0	59	59	59
5	58	61	63
15	55	66	72
25	51	68	77
35	42	63	80
45	35	63	76
55	23	54	68
65	12	45	58
75	5	30	46
85	0	14	26
90	0	9	18
95	35	160	82
105	188	582	815
115	347	991	920
125	487	1023	1412
135	606	915	1309
145	702	912	1073
155	776	968	1011
165	826	947	988
175	851	900	918
180	842	842	842

Zonal Lumen Summary

Zone	Lumens	%Lamp	%Fixture
0-30	46	1.03	1.40
0-40	75	1.68	2.28
0-60	133	2.97	4.05
0-90	179	36.99	5.43
40-90	104	2.32	3.15
60-90	45	1.02	1.39
90-180	3126	69.48	94.57
0-180	3306	73.47	100.00

Luminance Data

Angle in Deg	0-Deg cd/sm	45-Deg cd/sm	90-Deg cd/sm
45	871	1190	1296
55	706	1121	1285
65	500	1125	1232
75	640	913	1126
85	0	559	784

COMMON CIRCUIT CONFIGURATIONS FOR ONE LAMP WALL MOUNT FIXTURES

1C =Single circuit luminaire
1E =Single circuit luminaire with emergency circuit
1B =Single circuit luminaire with battery pack

/1/ =Circuit 1
/E/ =Emergency Circuit
/B/ =Battery Circuit

P =Power Mount
NP =Non-Power Mount

1C

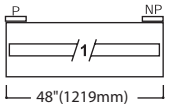

1E

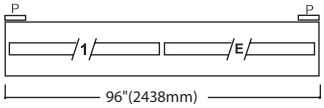

1B

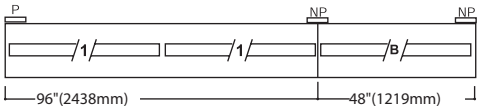

STANDARD ROW CONFIGURATIONS

FIXTURE LENGTH	4'	8'	12'	16'	20'	24'	28'	32'	36'	40'	44'	48'	52'	56'	60'	64'	68'	72'	76'	80'	84'	88'	92'	96'	100'	104'	108'
4'	1		1		1		1		1		1		1		1		1		1		1		1		1		1
8'		1	1	2	2	3	3	4	4	5	5	6	6	7	7	8	8	9	9	10	10	11	11	12	12	13	13

DESCRIPTION

Corelite's Iridium Perf Wall Mount is a semi-indirect fluorescent luminaire that features elegant styling with a sleek profile and end caps. The engineered optical system provides an asymmetric forward throw distribution. The Iridium Perf Wall may be mounted over standard 2"x4" J-Boxes for individual or continuous configurations using 4'and 8' modular sections. The Iridium Perf Wall is suited for open office perimeters, private offices, conference rooms, corridors and public spaces.

		Type
Catalog #		N-20
Project		
Comments		Date
Prepared by		

SPECIFICATION FEATURES

A ... Construction
Housing is one piece die-formed cold rolled steel, forming a 7"x 2-1/2" architectural profile. Standard 4'-0" and 8'-0" fixture lengths combine for continuous runs.

B ... End Caps
Standard Straight and optional Beveled end caps are precision die-cast aluminum mechanically attached without exposed fasteners.

C ... Reflectors
Die-formed reflectors are highly specular anodized aluminum.

D ... Electrical
Fixtures are prewired with quick wire connectors and use UL listed Class P, T5HO program rapid start universal voltage electronic ballasts. Power factor of 97% with less than 10% THD. Fixtures and electrical components certified to UL and CUL standards.

E ... Finish
Fixture housings are standard white using electrostatically applied polyester powder coat paint.

F ... Mounting
Fixture mounts directly to existing structure over a 2" x 4" standard electrical box mounted horizontally into the wall. Refer to installation section for details.

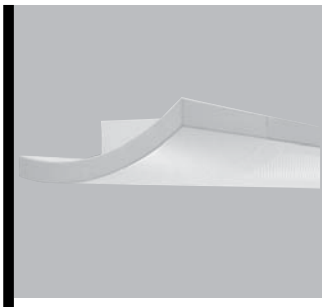

Iridium

PERF WALL
1T5HO

WALL MOUNT
SEMI - INDIRECT

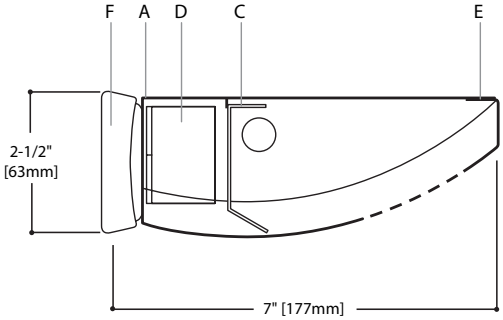

Standard Straight End Cap

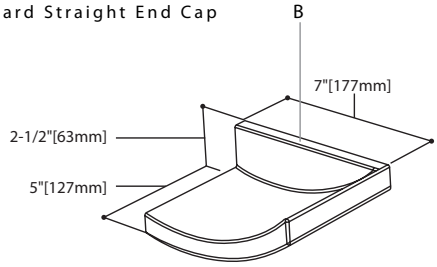

Beveled End Cap

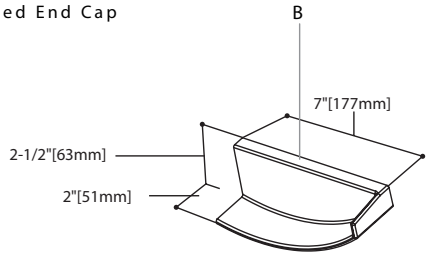

Light Distribution

Indirect - 94.6%
Direct - 5.4%

MODULES AND DIMENSIONS*

48" [1219mm]

96" [2438mm]

*Dimensions do not include end caps.

ORDERING INFORMATION

Sample Number: IW-SP-1T5-1Y-277-SU-WA-04

IW	S	P	1	28W T5	1	D(0-10)	120	SU-WA	20'	EB

Series
IW: Iridium Perf Wall Mount

Optics Up
S: Specular

Optics Down
P: Round Perf

Number of Lamps
1: 1 Lamp

Lamp Type
28W T5

Number of Circuits [1]
1: 1 Circuit

Wiring [1]
C: Standard Circuit
D: Dimming
E: Emergency
B: Battery Pack
T: Nightlight
Y: Daylight

Voltage [1]
120: 120V
277: 277V
347: 347V
UNV: Universal (120V-277V)

Suspension
SU-WA: Surface/Wall Mount

Run Length
Individually Mounted
Luminaires may be 4' or 8' in length
Continuously Mounted
Standard row configurations over 8' consist of 4' and 8' sections

Options
ES: Straight End Cap (Provided if none specified)
EB: Beveled End Cap

Notes: 1 Not all options available. Please consult your Cooper Lighting Representative for availability. Specifications and dimensions subject to change without notice.

PHOTOMETRICS

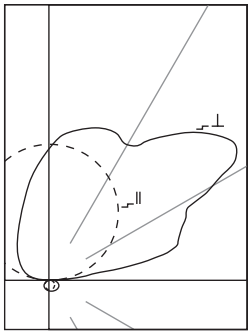

IW-SP-1T5
(1) FP54/841/HO
4500 Lumens

Efficiency 73.5%

Test Report
#LSI16233

Coefficients of Utilization

Effective floor cavity reflectance	20%																			
rc	80%				70%				50%			30%			10%			0%
rw	70	50	30	10	70	50	30	10	50	30	10	50	30	10	50	30	10	0
RCR																		
0	71	71	71	71	61	61	61	61	43	43	43	26	26	26	11	11	11	04
1	64	62	59	56	56	53	51	48	37	36	35	23	22	22	10	10	09	03
2	59	53	49	46	50	46	43	40	33	31	29	20	19	18	09	08	08	03
3	53	47	42	38	46	41	37	33	29	26	24	18	17	15	08	07	07	02
4	49	41	36	32	42	36	31	28	25	23	20	16	14	13	07	06	06	02
5	45	36	31	27	38	32	27	24	23	20	17	14	12	11	06	05	05	02
6	41	33	27	23	35	28	24	20	20	17	15	13	11	09	05	05	04	01
7	38	29	24	20	32	25	21	18	18	15	13	11	09	08	05	04	04	01
8	35	26	21	17	30	23	18	15	16	13	11	10	08	07	04	04	03	01
9	32	24	19	15	27	21	16	13	15	12	10	09	07	06	04	03	03	01
10	30	21	17	13	26	19	15	12	13	11	09	08	07	05	04	03	02	01

Candela

Angle	Along II	45º	Across ⊥
0	59	59	59
5	58	61	63
15	55	66	72
25	51	68	77
35	42	63	80
45	35	63	76
55	23	54	68
65	12	45	58
75	5	30	46
85	0	14	26
90	0	9	18
95	35	160	82
105	188	582	815
115	347	991	920
125	487	1023	1412
135	606	915	1309
145	702	912	1073
155	776	968	1011
165	826	947	988
175	851	900	918
180	842	842	842

Zonal Lumen Summary

Zone	Lumens	%Lamp	%Fixture
0-30	46	1.03	1.40
0-40	75	1.68	2.28
0-60	133	2.97	4.05
0-90	179	36.99	5.43
40-90	104	2.32	3.15
60-90	45	1.02	1.39
90-180	3126	69.48	94.57
0-180	3306	73.47	100.00

Luminance Data

Angle in Deg	0-Deg cd/sm	45-Deg cd/sm	90-Deg cd/sm
45	871	1190	1296
55	706	1121	1285
65	500	1125	1232
75	640	913	1126
85	0	559	784

COMMON CIRCUIT CONFIGURATIONS FOR ONE LAMP WALL MOUNT FIXTURES

1C =Single circuit luminaire
1E =Single circuit luminaire with emergency circuit
1B =Single circuit luminaire with battery pack

/1/ =Circuit 1
/E/ =Emergency Circuit
/B/ =Battery Circuit

P =Power Mount
NP =Non-Power Mount

1C

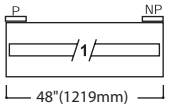

1E

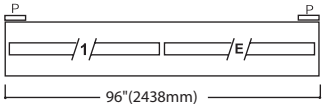

1B

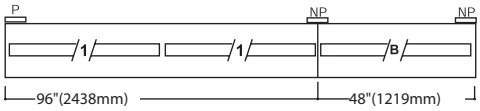

STANDARD ROW CONFIGURATIONS

FIXTURE LENGTH	4'	8'	12'	16'	20'	24'	28'	32'	36'	40'	44'	48'	52'	56'	60'	64'	68'	72'	76'	80'	84'	88'	92'	96'	100'	104'	108'
4'	1		1		1		1		1		1		1		1		1		1		1		1		1		1
8'		1	1	2	2	3	3	4	4	5	5	6	6	7	7	8	8	9	9	10	10	11	11	12	12	13	13

Type: **O**

PINNACLE
ARCHITECTURAL LIGHTING

EDGE 2A

CU 212

1T5 RECESSED LINEAR DIRECT / Acrylic Lens

CONSTRUCTION Formed cold rolled steel housing. Highly reflective die-formed white painted steel reflector, .125" diffuse snap-in acrylic lens with matte finish, removable for lamp replacement.

ELECTRICAL Standard programmed start UL listed Class P, T5 electronic, Sound Rated A, thermally protected, High Power Factor ballasts less than 10% THD, Universal voltage (120/277) with 50/60Hz operation. Through wiring with quick connects standard. Standard single circuit. Integral battery packs with remote test switch are provided with EB option.

MOUNTING Edge is designed to install into acoustical grid and non-accessible ceilings. Specify GXG for On-Grid Solutions (available on 4' and 8' individual units only. Fixtures fall on-grid), GX for Architectural Continuous Rows (Rows and Individual units do not fall on-grid) or non-accessible ceilings (specify trims FL or NF). Consult factory for detailed installation instructions.

FINISH Standard powder-coat white painted finish on exposed trim, consult factory for custom colors.

LABELS cUL Listed, approved for dry/damp location unless otherwise noted.

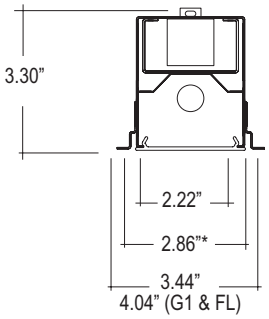

*Add .25" for rough-in aperture

LUMINAIRE SPECIFICATION

Sample Catalog #: E2A-1T5-24'-FL-120-W-DM

E2A-	1T5__-	__20'__-	__FL__-	120-	W__-	DM(0-10)
HOUSING	**LAMPS**	**LENGTH**	**MOUNTING**[1]	**VOLTAGE**	**FINISH**	**OPTIONS**
E2A- Edge 2 recessed with Acrylic Lens	**1T5-** (1) T5 Lamp **1T5HO-** (1) T5HO Lamp	**On-Grid Solution**[2] **4-** 4' (Individual Units Only) **8-** 8' (Individual Units Only) **Architectural Continuous Rows**[3] **and Inaccessible Ceiling** **Individual Units** **2-** 2' **3-** 3' **4-** 4' **6-** 6' **8-** 8' **Continuous Runs** **xx'-**Specify nominal overall row length in 1' increments	**On-Grid Solution**[2] **G1G-** 1" Ceiling Grid **G9G-** 9/16" Ceiling Grid **GSG-** Screw Slot Ceiling Grid **Architectural Continuous Rows**[3] **G1-** 1" Ceiling Grid **G9-** 9/16" Ceiling Grid **GS-** Screw Slot Ceiling Grid **Inaccessible Ceiling** **FL-** Standard 1/2" Flange **NF-** Flangeless	**120-** 120 V **277-** 277 V **347-** 347 V **UNV-** UNV	**W-** Matte White **CC-** Custom Color	**DM-** Dimming **EB-** Battery **EC-** Emergency Circuit **CP-** Chicago Plenum **CL-** Illuminated Connector[4]

[1] See back page for mounting detail.

[2] Available in 4' and 8' individual units only. Individual units fall on-grid.

[3] Architectural Continuous Rows do not fall on-grid.

[4] Add **CL** to all fixture types involved in the connector layout. See back page for additional information.

COMPONENTS

On-Grid Solutions (GXG)[1]

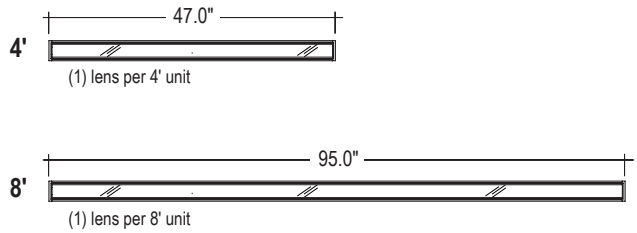

	Lamp Type 1T5
4'	(1) 28 or 54 Watt
8'	(2) 28 or 54 Watt

[1] On-Grid Solutions available on 4' and 8' individual units. Individual units fall on-grid.

Architectural Continuous Rows (GX) and Inaccessible Ceiling (FL, NF)[2]

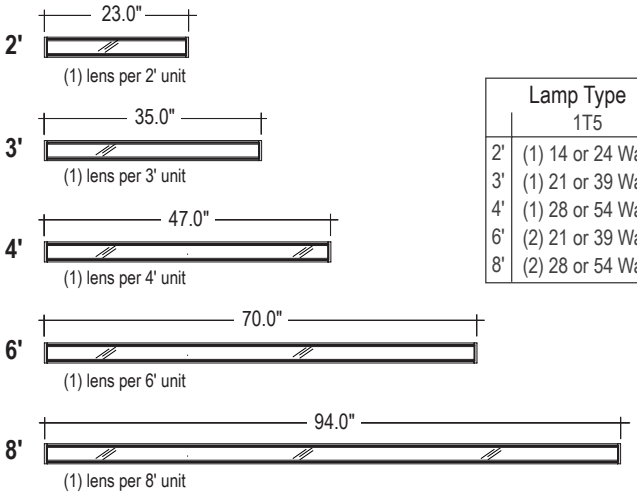

	Lamp Type 1T5
2'	(1) 14 or 24 Watt
3'	(1) 21 or 39 Watt
4'	(1) 28 or 54 Watt
6'	(2) 21 or 39 Watt
8'	(2) 28 or 54 Watt

[2] Architectural Continuous Rows (acoustical grid ceiling) and Inaccessible Ceilings available as individual units or continuous rows. Individual units and rows do not fall on-grid.

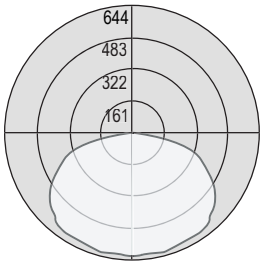

Test # 20596
Lamp: (1) 54 Watt T5
Total Luminaire Efficiency: 54.4%

Candela Array (1T5HO)

	0	45	90	135	180
0	588	588	588	588	588
5	605	623	644	615	609
15	621	621	625	632	627
25	629	618	618	614	624
35	618	613	601	612	625
45	603	588	576	585	598
55	546	529	512	532	550
65	470	439	419	440	468
75	355	319	290	319	358
85	130	87	61	87	130
95	0	0	0	0	0
105	0	0	0	0	0
115	0	0	0	0	0
125	0	0	0	0	0
135	0	0	0	0	0
145	0	0	0	0	0
155	0	0	0	0	0
165	0	0	0	0	0
175	0	0	0	0	0
180	0	0	0	0	0

FEATURES AND OPTIONS

• Mounting Detail

Inaccessible Ceiling Options

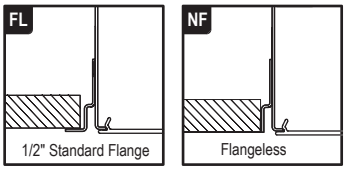

Acoustical Grid Ceiling Options

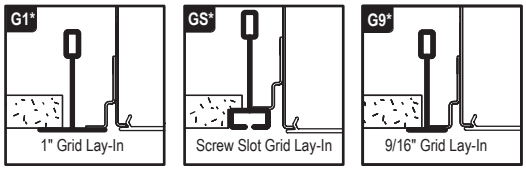

*Specify G1G, GSG or G9G for On-Grid Solutions using 4' or 8' individual units

• CIRCUITING

Single Circuit (1C) Layout

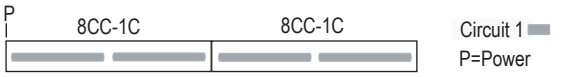

Single Circuit with Emergency Circuit (1E) Layout

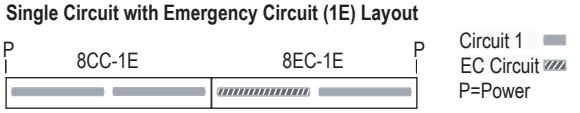

• ILLUMINATED CONNECTOR

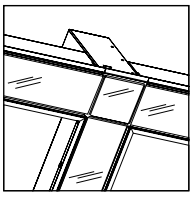

APPLICATION: The patent pending connector carries a low wattage PL lamp for seamless layouts while offering limitless system configurations. Recommended for gypsum board or inaccessible ceilings. Consult factory for acoustical grid ceiling.

CONSTRUCTION: Formed cold rolled steel housing.The height is 10.25” and width is 2.40”. T5 utilizes a 7 watt PL lamp and T5HO utilizes a 13 watt PL lamp. Connector cannot be dimmed. Factory submittal drawings required.

ORDERING INFORMATION: Specify Illuminated Connector (CL) in the options section of the part number. Sample Catalog #: E2A-1T5-24-FL-120-W-**CL**.

Type: **M, N, & O**

Product Number: 20948

Order Abbreviation: FP28/830/PM/ECO

General Description: 28W, T5 PENTRON PREMIER fluorescent lamp, 3000K color temperature, rare earth phosphor, 85 CRI, ECOLOGIC

Product Information	
Abbrev. With Packaging Info.	FP28830PMECO 40/CS 1/SKU
Actual Length (in)	45.8
Actual Length (mm)	1163.2
Average Rated Life (hr)	20000
Base	Miniature Bipin
Bulb	T5
Color Rendering Index (CRI)	85
Diameter (in)	0.67
Diameter (mm)	17.0
Family Brand Name	PENTRON® ECO®
Initial Lumens at 25C	2730
Initial Lumens at 35C	3050
Mean Lumens at 25C	2594
Mean Lumens at 35C	2898
Nominal Length (in)	48
Nominal Wattage (W)	28.00

Item Number	OSRAM SYLVANIA Description	Input Voltage (VAC)	Input Current (AMPS)	Lamp Type	Rated Lumens (lm)	No. of Lamps	Ballast Factor (BF)	System Lumens	Input Wattage (W)	System Efficacy (lm/W)
QUICKTRONIC® *PROFESSIONAL* PROStart® COMPACT FLUORESCENT - UNIVERSAL VOLTAGE DUAL ENTRY[5,6]										
NORMAL BALLAST FACTOR										
51818 ✪	QTP 1/2x13CF/UNV	120-277	0.25/0.11	13W DD/E,T/E	900	1	1.00	900	16	56
51850 ✪	*QTP 1/2x13CF/UNV-KIT* ▲			13W DD/E,T/E	900	2	1.00	1800	29	62
51823 ✪	QTP 1/2x18CF/UNV	120-277	0.32/0.14	18W DD/E,T/E	1200	1	1.00	1200	20	60
51851 ✪	*QTP 1/2x18CF/UNV-KIT* ▲			18W DD/E,T/E	1200	2	1.00	2400	38	63
51833 ✪	QTP 2x26CF/UNV	120-277	0.50/0.22	26W DD/E,T/E	1800	1	1.00	1800	28	64
51852 ✪	*QTP 2x26CF/UNV-KIT* ▲			26W DD/E,T/E	1800	2	1.00	3600	54	67
51898	QTP 2x26CF/UNV PEM			32W DT/E	2400	1	0.98	2350	35	67
				42W DT/E	3200	1	1.00	3200	45	71
51843	QTP 2x26/32/42CF/UNV M	120-277	0.90/0.40	26W DT/E	1800	2	1.02	3670	54	68
51853 ✪	*QTP 2x26/32/42CF/UNV M-KIT* ▲		0.53/0.23	32W DT/E	2400	2	0.96	4600	69	67
51863	QTP 2x26/32/42CF/UNV M PEM		0.57/0.25	42W DT/E	3200	2	0.95	6080	94	65
				57W DT/E	4300	1	1.00	4300	62	69
				70W DT/E	5200	1	0.92	4780	71	67
Also operates: see Ballast Technology & Specification Guide for additional lamp types.								▲CF Kits include a ballast, screws, wire, mounting bracket, an instruction sheet and a wire removal tool.		
NORMAL BALLAST FACTOR* - *QTP CF models above replace gray shaded models below										
51718	QTP 1/2x13CF/UNV BS	120-277	0.25/0.11	13W DD/E,T/E	900	1	1.00	900	16	56
51748	QTP 1/2x13CF/UNV TS			13W DD/E,T/E	900	2	1.00	1800	29	62
51723	QTP 1/2x18CF/UNV BS	120-277	0.32/0.14	18W DD/E,T/E	1200	1	1.00	1200	20	60
51753	QTP 1/2x18CF/UNV TS			18W DD/E,T/E	1200	2	1.00	2400	38	63
51733	QTP 2x26CF/UNV BS	120-277	0.50/0.22	26W DD/E,T/E	1800	1	1.00	1800	28	64
51763	QTP 2x26CF/UNV TS			26W DD/E,T/E	1800	2	1.00	3600	54	67
				32W DT/E	2400	1	0.98	2350	35	67
				42W DT/E	3200	1	1.00	3200	45	71
51738	QTP 1/2xCF/UNV BM	120-277	0.57/0.25	26W DD/E,T/E	1800	1	1.02	1830	28	65
51798	QTP 1/2xCF/UNV PM			26W DD/E,T/E	1800	2	1.02	3670	57	64
51768	QTP 1/2xCF/UNV TM			32W DT/E	2400	1	0.97	2330	36	65
				42W DT/E	3200	1	1.00	3200	46	70
51743	QTP 2x26/32/42CF/UNV BM	120-277	0.90/0.40	26W DT/E	1800	2	1.02	3670	54	68
51803	QTP 2x26/32/42CF/UNV PM		0.53/0.23	32W DT/E	2400	2	0.96	4600	69	67
51773	QTP 2x26/32/42CF/UNV TM		0.57/0.25	42W DT/E	3200	2	0.95	6080	94	65
	Also operates one 57W or 70W			57W DT/E	4300	1	1.00	4300	62	69
	CFL lamps			70W DT/E	5200	1	0.92	4780	71	67
QUICKTRONIC® *HIGH EFFICIENCY* POWERSENSE™ 32 T8 DIMMING SYSTEMS - A list of controllers is available from OSRAM SYLVANIA										
Power-line control (2-wire) or 0-10Vdc control (4-wire) - 100-5% Dimming Range - <10% THD										
50705	QTP 1x32T8/UNV DIM-TC	120-277	0.27/0.12	F032XP	3000	1	0.88	2640	30	88
							0.05	150	8	
50707	QTP 2x32T8/UNV DIM-TC	120-277	0.54/0.24	F032XP	3000	2	0.88	5280	60/58	88/91
							0.05	300	15	
50714	QTP 3x32T8/UNV DIM-TCL	120-277	0.73/0.30	F032XP	3000	3	0.88	7920	87/84	91/94
							0.05	450	20	
50716	QTP 4x32T8/UNV DIM-TCL	120-277	0.96/0.40	F032XP	3000	4	0.88	10560	114/110	92/96
							0.05	600	27	
POWERSENSE™ QTP models above also operate these lamps: F025, F017 & FB032. POWERSENSE T8 replaces former Helios T8 dimming products.										
QUICKTRONIC® *HIGH EFFICIENCY* HELIOS™ 32 T8 DIMMING SYSTEMS - A list of controllers is available from OSRAM SYLVANIA										
High Ballast Factor - "PLUS" High Light Output System* - *For 277V, 0-10Vdc Control Applications Only										
50718 ✪	QTP 4x32T8/277 DIM PLUS-TCL	277	0.53	F032XP	3000	4	1.20	14400	145	99
							0.05	600	28	
QUICKTRONIC® *HIGH EFFICIENCY* POWERSENSE™ 28 T5 DIMMING SYSTEMS - A list of controllers is available from OSRAM SYLVANIA										
Power-line control (2-wire) or 0-10Vdc control (4-wire) - 100-1% Dimming Range - <10% THD										
50726 ✪	QTP 2x28T5/UNV DIM-TCL	120-277	0.53/0.23	FP28	2900	2	1.00	5800	63/62	92/94
							0.01	58	10	
POWERSENSE™ QTP model above also operate these lamps: FP35, FP21 & FP14										
QUICKTRONIC® *PROFESSIONAL* HELIOS™ 54 T5 HO DIMMING SYSTEMS[3] - A list of controllers is available from OSRAM SYLVANIA										
(0-10Vdc control) - 100-1% Dimming Range - <10% THD										
49671	QT1x54/120PHO-DIM	120	0.54	FP54T5HO	5000	1	1.00	5000	62	81
							0.01	50	8	
49672	QT1x54/277PHO-DIM	277	0.23	FP54T5HO	5000	1	1.00	5000	61	82
							0.01	50	8	
49673	QT2x54/120PHO-DIM	120	1.07	FP54T5HO	5000	2	1.00	10000	120	83
							0.01	100	18	
49674	QT2x54/277PHO-DIM	277	0.45	FP54T5HO	5000	2	1.00	10000	117	85
							0.01	100	18	
HELIOS™ QT models above also operate these lamps: FT55DL & FPC55										

3: Rated lamp lumens and performance data based on PENTRON® HO lamps. Rated lumens at 35°C lamp ambient temperature,
5: Rated lamp lumens and performance data based on DULUX T/E series 4 pin lamps. 6: Data is for all models within the brackets.
The maximum input current is shown for maximum input power. ✪ New Product. Contact OSRAM SYLVANIA for product availability.

Recessed wall luminaires - stainless steel

Type: **P**
BEGA Product #:
Project:
Voltage:
Color:
Options:
Modified:

Housing: Constructed of die cast aluminum.
Enclosure: All stainless steel faceplate, 3/16" thick, flush tempered glass clear with white translucent ceramic coating. Faceplate is secured by four (4) flat socket head, stainless steel, captive screws threaded into stainless steel inserts in the housing casting. Continuous high temperature O-ring gasket for weather tight operation.

Electrical: Lampholder: Compact fluorescent; G23-2 (9W), 2-pin, rated 75W, 600V.
Ballast: Magnetic, HPF available in 120V or 277V - specify.

Through Wiring: Maximum of four (4) No. 12 AWG conductors (plus ground) suitable for 75°C. Two 7/8" knockouts provided for 1/2" conduit.

Finish: #4, light brushed stainless steel. Stainless steel requires regular cleaning and maintenance, much like household appliances, to maintain its luster and to prevent tarnishing or the appearance of rust like stains.

U.L. listed, suitable for wet locations and for installation within 3 feet of ground. Suitable for all types of construction including poured concrete. Type non-IC. Protection class: IP 65.

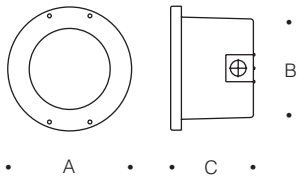

Recessed luminaires with stainless steel faceplate and white diffusers. U.L. listed, suitable for wet locations. IP 65.
Finish: #4 brushed stainless steel.

			Lamp	Lumen	A	B	C
2815P	Recessed	ADA	1 9W CF quad-2p	525	8¼	7	4¾
515	~~CPC, Concrete Protection Cover for 2815P~~						

BEGA/US 1000 BEGA Way, Carpinteria, CA 93013 [P] 805·684·0533 [F] 805·684·6682

Deck Lighting

The modern, simple solution to designer deck lighting.

These quality UniLED™ stainless steel lights bring a deck to life at night!

These lights help create a mood providing subtle ambient lighting,and are particularly useful as marker lights around the edge of a deck or on steps.

Available in a range of standard LED Colours :-

White, Blue, Red, Green, Amber

Close up view of a single round Double Lamp Deck Light

Features include :-

- Safe
- Made from Marine Grade Stainless Steel
- Exterior Use
- Very Low Power Consumption
- 24 Volt
- 100,000 Hour Estimated Life
- UniLED lights have been installed in many parts of the world, in countries that have different mains electricty voltage ranging from 110v to 240v.
- Submersible
- Easy to install
- Range of Colours
- CE Approved
- Remote Control Available
- Exterior Power Supply supplied with the box set runs up to 25 lights
- Genuine UniLED™ lights *not imitation*
- Registered DESIGN NUMBER 3004742 with the Patent Office

UniLED™

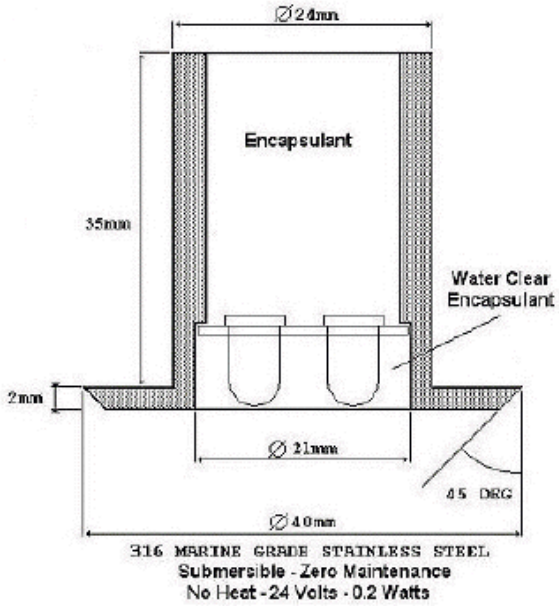

Easy Installation

These deck lights are designed to be easy to install for an electrical professional.

- Drill hole in your deck with the drill bit provided in the box set.
- Insert deck light.
- Connect the pre-wired **deck lights together 'daisy chain' fashion as indicated in diagram.

** each light has 2 lengths of 1 metre wire complete with connectors on ends

For answers to more questions about these deck lights please see our FAQ (Frequently Asked Questions)

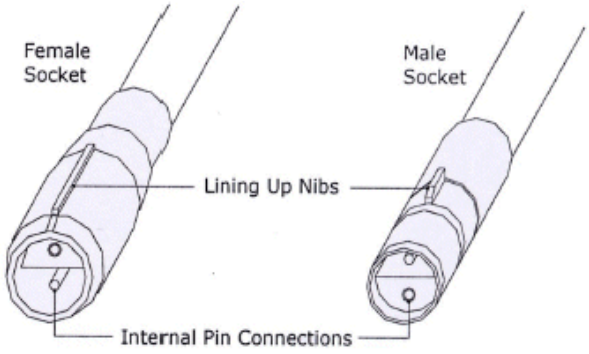

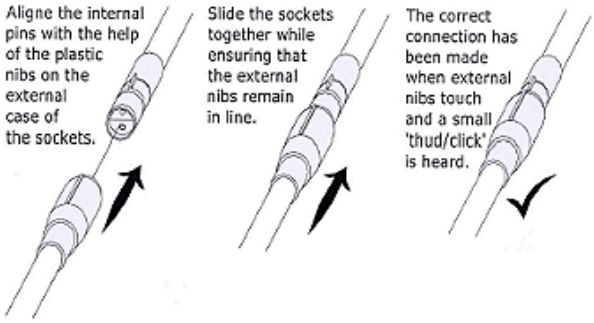

Wall and ceiling luminaires

Type: **EX**
BEGA Product #:
Project:
Voltage:
Color:
Options:
Modified:

Housing: One piece die cast aluminum supplied with center lock-up, universal mounting bracket for direct attachment to 3½" or 4" octagonal wiring box.
Enclosure: Hand blown three-ply opal glass with screw thread neck, fully gasketed for weather tight operation using a molded silicone rubber O-ring. One piece die cast aluminum half lid and guard, secured by three (3) captive socket head, stainless steel screws threaded into stainless steel inserts. Interior of lamp compartment painted gloss white.

Electrical: Lampholder: Fluorescent are type G24q-1 (13W), rated 75W, 250V.
Ballast: Compact fluorescent 13W is electronic ballast operating 4-pin lamps which provide reliable low temperature starting down to -20°C. Electronic ballast is universal voltage 120V through 277V.

Finish: These luminaires are available in five standard BEGA colors: Black (BLK); White (WHT); Bronze (BRZ); Silver (SLV); Eurocoat™ (URO). To specify, add appropriate suffix to catalog number. Custom colors supplied on special order.

U.L. listed, suitable for wet locations. Protection class: IP 65.

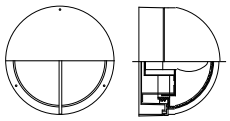

• A • • B •

Wall or ceiling mounted luminaires with rugged die cast aluminum half lid and guard. Three-ply opal glass with screw neck. Polycarbonate diffuser available - suffix: PDC. U.L. listed, suitable for wet locations. IP 65.
Color: Standard BEGA finishes.

		Lamp		Lumen	A	B
2955P	Wall	2	13W CF quad-4p	1800	10¼	8¼
SBXC-10	Surface wiring box with cover for 10¼" φ luminaires					

BEGA/US 1000 BEGA Way, Carpinteria, CA 93013 [P] 805·684·0533 [F] 805·684·6682

Recessed wall luminaires - stainless steel

Type: **PX**
BEGA Product #:
Project:
Voltage:
Color:
Options:
Modified:

Housing: Constructed of die cast and extruded aluminum with integral wiring compartment. Mounting tabs provided.
Enclosure: All stainless steel faceplate, 3/16" thick. 1/8" thick, tempered glass, etched, (behind louvers). Faceplate is secured by two (2) flat socket head, stainless steel, captive screws threaded into stainless steel inserts in the housing casting. Continuous high temperature O-ring gasket for weather tight operation.

Electrical: Lampholder: G23 (7W/9W), 2-pin, rated 75W, 600V.
Ballast: Magnetic, HPF available in 120V or 277V - specify.
Through Wiring: Maximum of four (4) No. 12 AWG conductors (plus ground) suitable for 75°C. Two 7/8" knockouts provided for 1/2" conduit.

Finish: #4, brushed stainless steel. Stainless steel requires regular cleaning and maintenance, much like household appliances, to maintain its luster and to prevent tarnishing or the appearance of rust like stains.

U.L. listed, suitable for wet locations and for installation within 3 feet of ground. Suitable for all types of construction including poured concrete. Type non- IC. Protection class: IP 64.

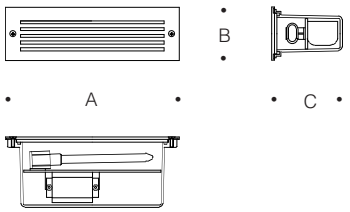

Recessed luminaires with stainless steel faceplate with integral louvers and etched tempered glass diffusers.
U.L. listed, suitable for wet locations. IP 64.
Finish: #4 brushed stainless steel.

			Lamp	Lumen	A	B	C
2036P	Recessed	ADA	1 7/9W CF twin-2p	400/600	10 3/8	3 3/16	4

BEGA/US 1000 BEGA Way, Carpinteria, CA 93013 [P] 805·684·0533 [F] 805·684·6682

LightSaver® LS-301 Dimming Photosensor

Types: **LPC, LR1, LR2**

Product Overview

Description

The LightSaver LS-301 is a ceiling mount, low voltage indoor photosensor that works with standard, 0-10 VDC electronic dimming ballasts to dim lighting as daylight increases.

Operation

The LS-301 mounts on a ceiling and utilizes a spectral filtering system to measure daylight and electric light levels. A closed loop daylighting system, the LS-301 measures the total light level from daylight and electric light in the controlled area to adjust electric lighting levels. As the daylight contribution increases, the lights dim down. The photosensor utilizes sliding setpoint control, which responds to the different spatial distribution qualities of electric light and daylight. The LS-301 calculates the required light level for current daylight contribution based on two setpoints. One represents the target level when no daylight is present (night setpoint) and the other when significant daylight is present (day setpoint).

Adjustment via Handheld Remote Control

All LS-301 adjustments are made with one of two handheld remotes. The LSR-301-S provides five buttons for initial set-up, which is easily completed by first raising or lowering electric light levels to desired levels, then programming this target level into the photosensor. The LSR-301-P provides three buttons for occupants to adjust light levels. With this optional tool, users can increase target light levels by up to 25% or reduce them to the lamp/ballast minimum level. Pressing the "Auto" button returns the control to programmed levels.

Applications

The LS-301 is designed to blend into its surroundings when installed in any environment. It provides one zone of daylighting control in a private office or classroom. In these applications, the LS-301 can be combined with an occupancy sensor. Often, it is possible for the LS-301 to share a single power pack with occupancy sensor(s).

Features

- Provides precise control of lighting to maintain desired light level
- Extremely linear photocell response with greater than 1% accuracy
- Designed to measure light as the human eye perceives it, eliminating "overreporting" illumination levels provided by daylight
- Separate handheld remote controls for setup and occupant adjustment to prevent tampering
- Boosts energy savings by reducing maximum lamp output, often resulting in a 20% reduction or more compared with lights at full output
- Achieves lumen maintenance by holding target light level as lamp output decreases over time

Specifications

- Full range dimming: .2 VDC (minimum) to 10 VDC (100% lighting) output voltage
- Current consumption: 30 mA @ 24 VDC
- In typical applications, setpoints are adjustable from 20-60 footcandles (210-640 lux)
- Controls up to 50 standard dimming ballasts in one zone
- Sensor leads: gray and violet to ballast, red and black to 24 VDC
- Dimensions: 2.35" diameter. x 0.875" depth (60mm x 22mm), threaded piece extends 1.25" (31.8mm) from back, fits .5" knockout
- Five-year warranty

Product Controls

Remote Controls

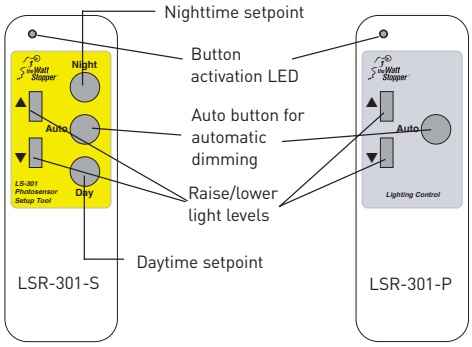

Remote handheld (above left) enables easy set-up while optional occupant remote provides adjustability for individual lighting preferences.

Spectral Response Curve

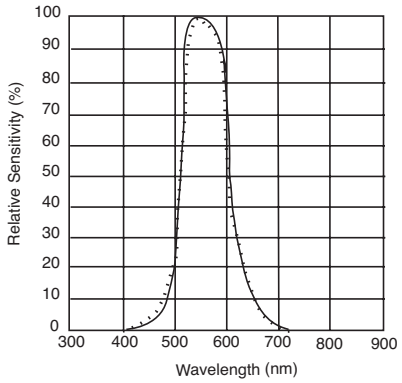

The spectral response of the LS-301 photocell closely matches the sensitivity of the human eye.

Wiring & Installation

Wiring

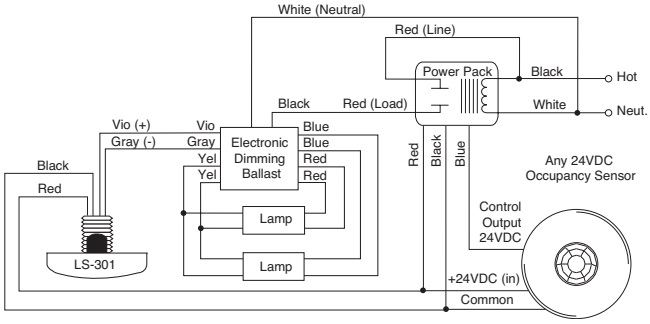

Mounting and Installation

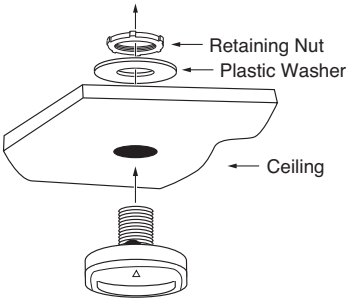

Coverage

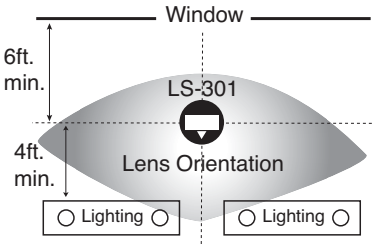

Placement Guidelines

- Mount photocell between 6 and 12 feet (1.8m - 3.7m) from window.
- Do not mount directly above direct/indirect pendant fixtures. Mount at least 4 feet (1.2m) from pendant fixtures.

Ordering Information

Catalog No.	Description	Input Voltage
☐ LS-301	Dimming Photosensor	24 VDC
☐ LSR-301-S	Setup Remote Control (2 AAA batteries included)	
☐ LSR-301-P	Occupant Remote Control (2 AAA batteries included)	

LS-301 works with Watt Stopper power packs

Pub. No. 17505

B Power and Auxiliary Relay Packs

Type: **LPP**

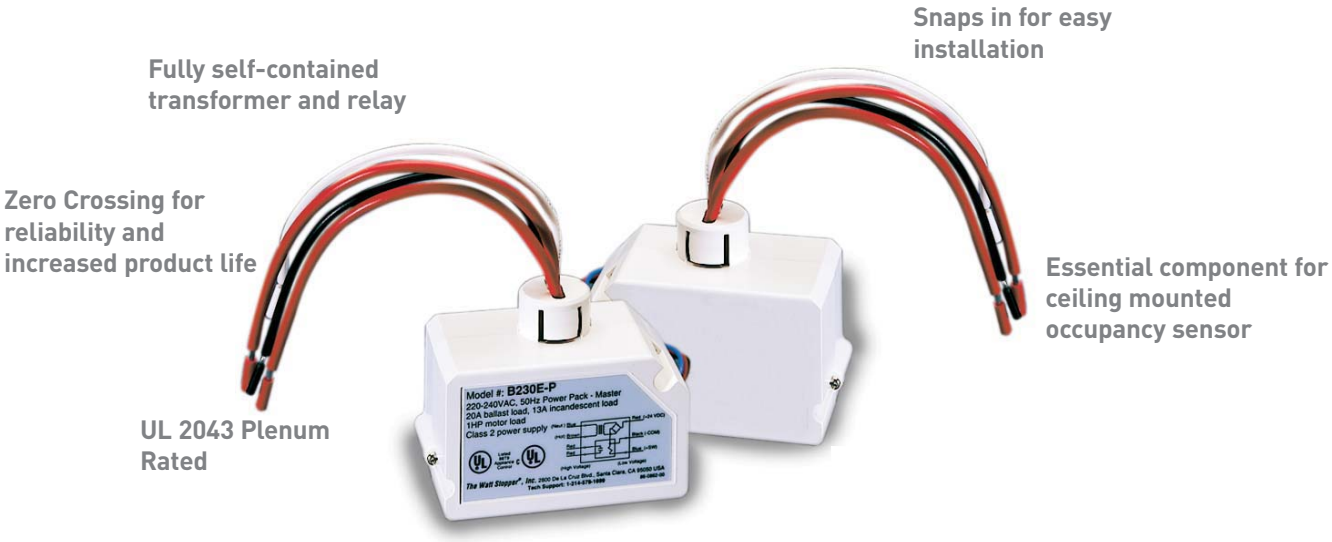

Product Overview

Description

Power packs provide 24VDC operating voltage to all Watt Stopper 24VDC occupancy sensors and LightSaver controllers. Auxiliary relay packs are similar to power packs but have no transformer power supply, only an isolated relay.

Operation

Power packs consist of a transformer and high-current relay combined in one small, powerful package. The transformer has a primary high voltage input and a secondary, low voltage output (24 VDC,114 mA with relay connected). The secondary voltage provides operating power to Watt Stopper sensors. When the occupancy sensors detect motion or light sensors detect inadequate ambient light, they electrically close an internal circuit which sends 24 VDC back to the power or auxiliary relay packs that control the lighting system.

Plenum Rated

The B power packs are UL 2043 plenum rated with teflon coated low voltage leads and plenum rated plastic. This means that the power packs do not need to be installed in the junction box, but can be installed in the plenum. They are housed in ABS, UL-rated 94V-0 plastic enclosures.

Applications

Watt Stopper power and auxiliary relay packs are designed to be flexible enough to control almost any lighting or HVAC load. For example, power packs can control lighting circuits, self-contained air conditioners, pumps, fans, motors, VAV systems, motorized damper controls and setback thermostats. They are excellent for any application which requires high voltage switching through low voltage controls. By linking power packs and sensors, an almost unlimited number of configurations can be obtained.

Features

- Self-contained transformer relay system
- Available for 120, 220 to 240, 277 and 347 volt systems
- Capable of switching up to 20 Amps of electrical load (ballast)
- Installation in J-box not required
- Low voltage leads are teflon coated for use in plenum applications
- Can be used as a low voltage switch for other applications or as stand-alone low voltage switch
- 1/2 inch snap-in nipple attaches to standard electrical enclosures via 1/2 inch knockouts
- Zero crossing circuitry for reliability and increased product life (120, 277, 240 volt versions only)

Specifications

- Secondary voltage of 24 VDC
- Secondary output of 150 mA, 114 mA with relay connected
- Low voltage leads are rated for 300 volts
- UL-rated 94V-0 plastic enclosure
- UL 2043 plenum rated
- Dimensions: 1.6" x 2.75" x 1.6" (41mm x 70mm x 41mm) with a 1/2 inch snap-in nipple
- UL and CUL listed; Five year warranty

System Layout

Power Pack Installation

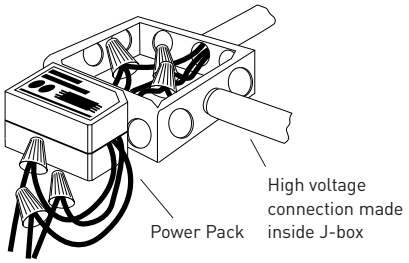

Power Pack Schematic

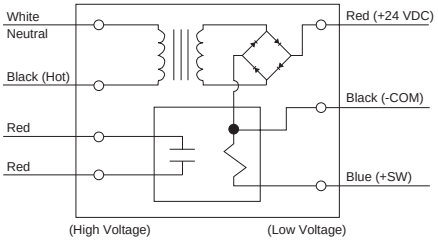

Wiring Diagrams

Power Pack with Ceiling Sensor

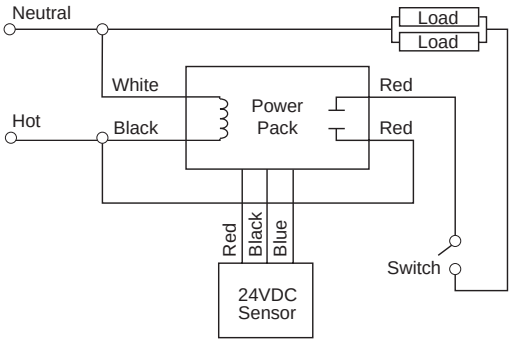

Auxiliary Relay Pack with Sensor

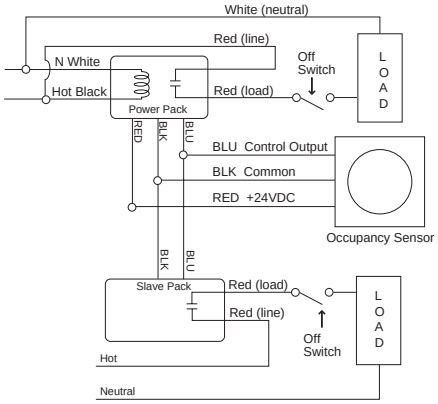

Ordering Information

Catalog No.	Description	Input Voltage	Load Ratings Ballast(A)	Incan(A)	Motor(HP)	Output
☐ B120E-P*	Power Pack	120 VAC; 60 Hz	20	13	1	24 VDC; 150 mA**
☐ B277E-P*	Power Pack	277 VAC; 60 Hz	20	-	-	24 VDC; 150 mA**
☐ B230E-P*	Power Pack	220-240 VAC; 50-60 Hz	20	13	1	24 VDC; 150 mA**
☐ B347D-P	Power Pack	347 VAC; 60 Hz	15	-	-	24 VDC; 150 mA**
☐ S120/277/347E-P	Relay Pack	120/277/347 VAC; 60 Hz	20/20/15	13/-/-	1/-/-	

* These power packs feature zero crossing
**Output is 150 mA before relay is connected and 114 mA after relay is connected.
Power packs are white; auxiliary relay packs are black.

Installation Notes

1. All Watt Stopper power packs should be installed in accordance with state, local, and national electrical codes and requirements.
2. Power packs are designed to attach to existing or new electrical enclosures with 1/2 inch knockouts. (Check electrical codes in your area.)
3. Most applications require UL listed, 18-22 AWG, 3-conductor, Class 2 cable for low voltage wiring. For plenum return ceilings use UL listed plenum-approved cables.

Pub. No. 6707

MIRO

Miro Architectural Switches, Dimmers, and Fan Controllers

Type: **LD**

Product Overview

Description

Miro Switches, Dimmers, Fan Controllers, and Multilocation Controllers offer reliable operation of a wide variety of lighting loads and ceiling fans. Switches operate a full range of lighting and non-lighting loads, while Incandescent or Universal Dimmers operate dimmable lighting loads. Fan Controllers are capable of operating two ceiling fans from a single location. Multilocation Controllers are used in conjunction with Dimmers to enable dimming control from multiple locations.

Operation

Users press up and down on the Control Paddles to turn loads on and off (Switches) or raise and lower light levels (Dimmers). Dimmers may also be used as stand-alone replacements for single-pole light switches. Users operate Fan Controllers via the paddle and push-buttons on the face, with four speeds and OFF, as well as speed up or slow down.

Deratings

Derate dimmers as follows:

	Maximum Capacity		
	Single Dimmer	Dimmer at end of multi-gang	Dimmer in middle of multi-gang
• Incandescent / Quartz Halogen	600W	500W	400W
• Magnetic Low Voltage	500W	400W	300W
• Electronic Low Voltage	500W	400W	300W
• Cold Cathode / Neon	500W	400W	300W
• Fluorescent:			
– 2 Wire	500W	400W	300W
– Compact	500W	400W	300W

Features

- Full line of specification-grade residential/light commercial devices
- Optional LED pilot light for single-pole 3- and 4-way switches
- Multilocation dimming and fan controls
- Compatible with most load types
- Last level recall (preset)
- Patented overload and short circuit protection (Dimmers and Fan Controllers)
- Silent or "de-humming" technology for buzz-free fan control operation

Specifications

	Switches	Lighted Switches	Incandescent Dimmer	Universal Dimmer	Multilocation Controller	Fan Controller
Electrical						
Voltage	**120V/277V**	**120V**	**120V**	**120V**	**120V**	**120V**
Max Load	**15A**	**15A**	**600W***	**600W***	**N/A**	**1.5A**
Min Load	**N/A**	**N/A**	**40W**	**25W**	**N/A**	**N/A**
Neutral required				•	•	•
Traveler required					•	
Load Types						
Incandescent	x	x	•	•	•	
Dimmable magnetic low-voltage	x	x		•	•	
Dimmable electronic low-voltage	x	x		•	•	
Dimmable neon, cold-cathode	x	x		•	•	
Dimmable 2-wire fluorescent **	x	x				
Non-dimmable lighting loads	•	•				
Motors, pumps	•	•				
Ceiling fan(s)						•
Features						
Square-law dimming			•	•		
Last level recall			•	•	•	•
Air-gap isolation switch			•	•		•
Long-life status LED		•	•	•		•
Default fade rate			2 sec	2 sec	2 sec	
Overload protection			•	•		•
Short-circuit protection			•	•		•
UL listed; five-year warranty	•	•	•	•	•	•

Dimensions:
MDS246, MDS248, MDS268:
2.65"L x 1.78"W x 1.75"D; depth in wall 1.35" (67.3mm x 45.2mm x 44.5mm; depth in wall 34.3mm)
MDS266, MDS269: 2.65"L x 1.78"W x 1.85"D; depth in wall 1.50" (67.3mm x 45.2mm x 46.9mm; depth in wall 38.1mm)
MCD26, MCD267: 2.65"L x 1.78"W x 1.94"D; depth in wall 1.54" (67.3mm x 45.2mm x 49.3mm; depth in wall 39.1mm)
MCD68: 2.65"L x 1.78"W x 1.75"D; depth in wall 1.35" (67.3mm x 45.2mm x 44.4mm; depth in wall 34.3mm)
MCF8: 2.65"L x 1.78"W x 2.15"D; depth in wall 1.75" (67.3mm x 45.2mm x 54.6mm; depth in wall 44.4mm)

** Advance MK X or equivalent x Switches a dimmable load type

Operation

Dimmer and Multilocation Operation

1 tap = last used level
2 taps = full output
Press and hold = raise light level

1 tap = fade to OFF
Press & hold = reduce light level

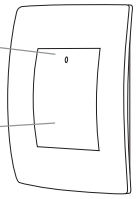

Fan Controller Operation

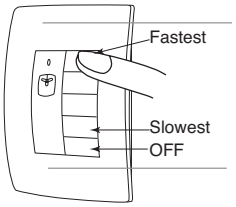

1 tap = Turn ON; resume last used speed
2 taps = Full speed
Press & hold = Increase speed

Tap once = Turn fan OFF
Press & hold = Decrease speed

Ordering Information

Catalog No.	Color	Product Description	Catalog No.	Color	Product Description
☐ MDS246-W	Warm White	Switches	☐ MCD26-W	Warm White	Incandescent
☐ MDS246-A	Light Almond	Single Pole	☐ MCD26-A	Light Almond	Dimmers
☐ MDS246-G	Charcoal Gray		☐ MCD26-G	Charcoal Gray	
☐ MDS248-W	Warm White	Switches	☐ MCD267-W	Warm White	Universal Dimmers
☐ MDS248-A	Light Almond	3-way	☐ MCD267-A	Light Almond	
☐ MDS248-G	Charcoal Gray		☐ MCD267-G	Charcoal Gray	
☐ MDS266-W	Warm White	Lighted Switches	☐ MCD68-W	Warm White	Multilocation
☐ MDS266-A	Light Almond	Single Pole	☐ MCD68-A	Light Almond	Controllers
☐ MDS266-G	Charcoal Gray		☐ MCD68-G	Charcoal Gray	
☐ MDS268-W	Warm White	Lighted Switches	☐ MCF8-W	Warm White	Fan Controllers
☐ MDS268-A	Light Almond	3-way	☐ MCF8-A	Light Almond	
☐ MDS268-G	Charcoal Gray		☐ MCF8-G	Charcoal Gray	
☐ MDS269-W	Warm White	Lighted Switches			
☐ MDS269-A	Light Almond	4-way			
☐ MDS269-G	Charcoal Gray				

* Subject to derating when more than one dimmer is ganged together or when using non-incandescent load types.
See Derating Chart for details.

Pub. No. 18803

CUSD2007

structure

GENERAL CODE, LOAD +
MATERIAL INFORMATION

WIND LOADING +
FOUNDATION ELEMENTS

FLOOR + WALL FRAMING

ROOF FRAMING

SHIPPING CONTAINER

MISCELLANEOUS + SPECIAL FEATURES

CONSULTING ENGINEERS

STRUCTURAL CALCULATIONS

Solar Decathlon 2007

University of Colorado at Boulder

August 7, 2007

CONSULTING ENGINEERS

☐ JVA, Incorporated
1319 Spruce Street
Boulder, CO 80302
Ph: 303.444.1951
Fax: 303.444.1957

☐ JVA, Incorporated
25 Old Town Square, Ste. 200
Fort Collins, CO 80524
Ph: 970.225.9099
Fax: 970.225.6923

☐ JVA, Incorporated
PO Box 1860
79050 US Highway 40
Winter Park, CO 80482
Ph: 970.722.7677
Fax: 970.722.7679

Web site:
www.jvajva.com

E-mail:
info@jvajva.com

Job Number:	12849		
Project Name:	Solar Decathlon 2007		
Client:	University of Colorado at Boulder		
Principal-in-Charge:	RBH	Project Engineer:	KCR
Head Drafter:	KCR	Date:	August 7, 2007

STRUCTURAL CALCULATIONS
TABLE OF CONTENTS

UNISTRUT® *The Original Metal Framing*

Part No. _____

Back | Download PDF | Add To Cart | View Cart | Download CAD Data

P3000 - 1-5/8" x 1-3/8", 12 Gage, Solid

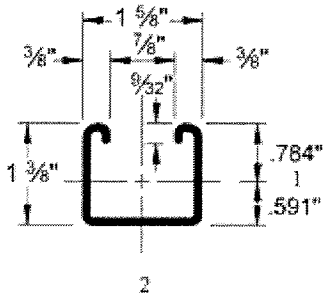

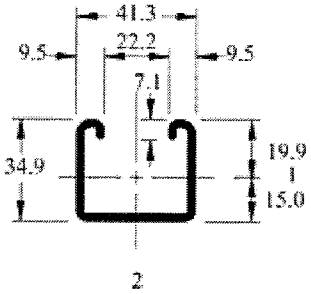

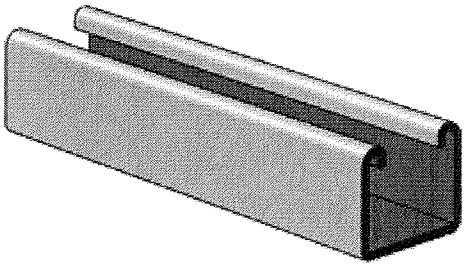

Column Loading - P3000

Unbraced Height (in)	Allowable Load at Slot Face (lbs)	Max Column Load Applied at C.G. K=0.65 (lbs)	K=0.65 (lbs)	K=0.65 (lbs)	K=0.65 (lbs)
24	3,180	9,690	8,980	8,050	7,210
36	2,920	8,160	7,210	6,130	5,240
48	2,590	6,820	5,810	4,730	3,860
60	2,300	5,740	4,730	3,690	2,990
72	2,040	4,850	3,860	2,990	2,270
84	1,830	4,100	3,240	2,400	*
96	1,650	3,530	2,770	1,840	*
108	1,450	3,080	2,270	*	*
120	1,250	2,710	1,840	*	*

*KL/r > 200

Beam Loading - P3000

Span (in)	Max Allowable Uniform Load (lbs)	Defl at Uniform load (in)	Uniform Loading at Deflection Span /180 (lbs)	Span /240 (lbs)	Span /360 (lbs)	Lateral Bracing Reduction Factor
24	1,280	0.07	1,280	1,280	1,280	1.00
36	850	0.15	850	850	580	0.96
48	640	0.26	640	490	330	0.91
60	510	0.41	420	310	210	0.88
72	430	0.59	290	220	150	0.84
84	370	0.81	210	160	110	0.82
96	320	1.05	160	120	80	0.79
108	280	1.30	130	100	60	0.77
120	260	1.66	100	80	50	0.75
144	210	2.32	70	50	40	0.70
168	180	3.15	50	40	30	0.66
192	160	4.18	40	30	-	0.62
216	140	5.21	-	-	-	0.58
240	130	6.64	-	-	-	0.54

Channel Selection Chart

Related Channel Nuts

Notes:

1. Above loads include the weight of the member. This weight must be deducted to arrive at the net allowable load the beam will support.
2. Long span beams should be supported so as to prevent rotation and twist.

06 12 00/MUR
BuyLine 1605


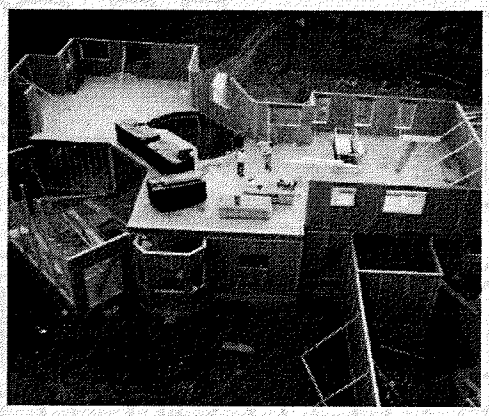
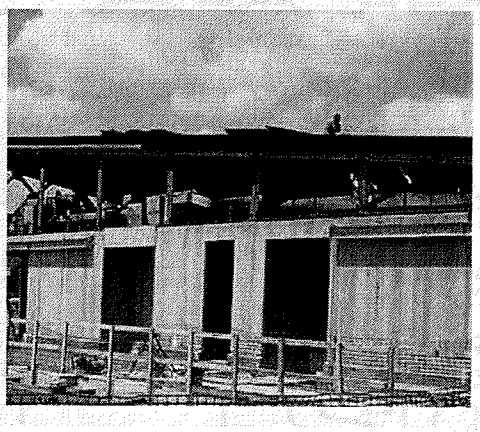
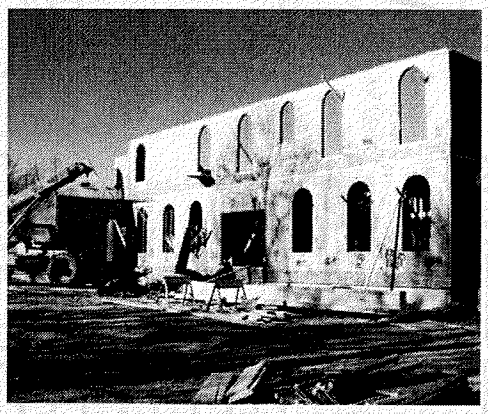
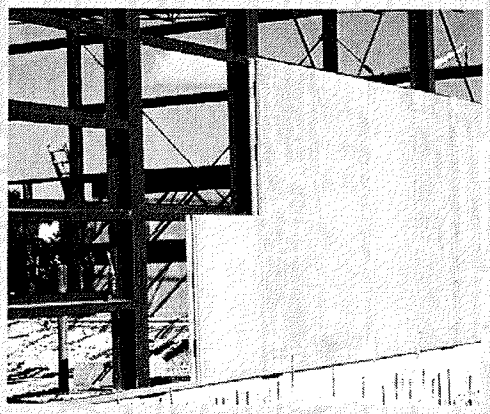

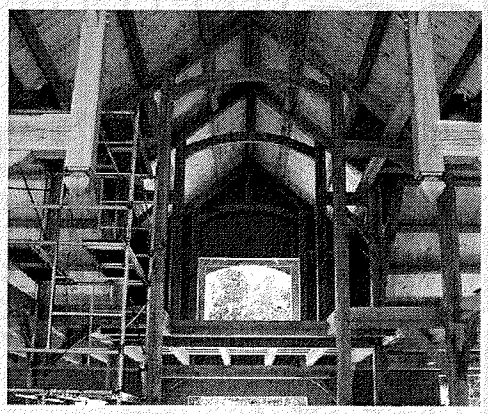

murus

The Cutting Edge of Building Technology

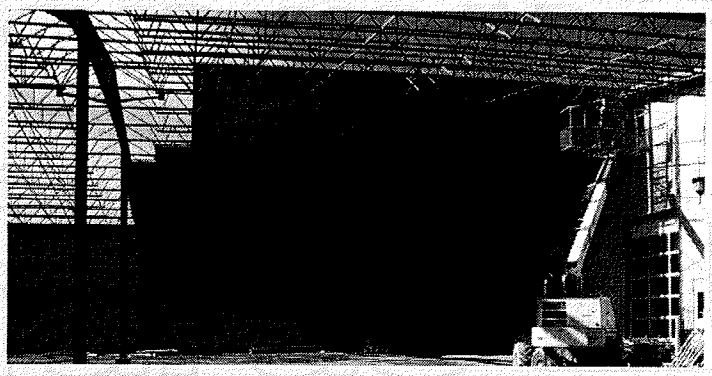

Polyurethane Foam Core with Patented Cam-Lock System for Premium Performance

EPS Foam Core Provides High Quality, Dependable Performance

Ideal for Most Green Building Projects

Highly Energy Efficient with Superior Insulating Values

Excellent Structural Properties

Replaces Conventional Stud Framing

murus

STRUCTURAL INSULATING PANELS

ıes: GR PG HG PL SS ST

Veight:
170 Lbs/100 Ft
(253 Kg/100 m)

ıdditional Specifications

Elements of Section

ırea of Section - 0.500 in^2 (3.2 cm^2)

ıxis 1-1

- Moment of Inertia (I) - 0.120 in^4 (5.0 cm^4)
- Section Modulus (S) - 0.153 in^3 (2.5 cm^3)
- Radius of Gyration (r) - 0.489 in (1.2 cm)

ıxis 2-2

- Moment of Inertia (I) - 0.203 in^4 (8.4 cm^4)
- Section Modulus (S) - 0.250 in^3 (4.1 cm^3)
- Radius of Gyration (r) - 0.638 in (1.6 cm)

3. Allowable uniformly distributed loads are listed for various simple spans, that is, a beam on two supports. If load is concentrated at the center of the span, multiply load from the table by 0.5 and corresponding deflection by 0.8.
4. The lateral bracing factor should be multiplied by the load to determine the load retained based on the distance between lateral braces.

Bearing Load on Channel:

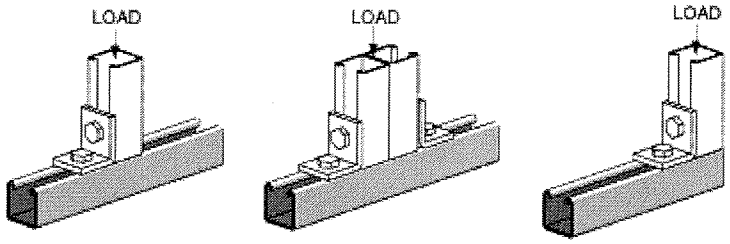

Max Load	Max Load	Max Load
5,000 Lbs	8,000 Lbs	3,500 Lbs
2,268 Kg	3,629 Kg	1,588 Kg

The Murus Company was founded in 1987 for the sole purpose of manufacturing the very best Structural Insulating Panels (SIPs) in the industry, while providing our clients with outstanding client services and support throughout the project term. The Murus manufacturing facility is located in Mansfield, Pennsylvania, and Murus SIPs are shipped throughout North America.

Murus SIPs are used for exterior wall, roof and floor applications in residential and light commercial construction. Murus SIPs replace conventional wood framing and provide insulated, finish-ready surfaces. Each panel consists of a rigid foam insulation core which is formed or bonded between two layers of sheathing, or "skins." Structural panels are manufactured with rated skins and are capable of supporting axial and transverse loads. Curtain wall panels are only intended to support transverse loads and must be attached to a structural frame. Oriented strand board (OSB) is the most widely used skin material for structural applications because it is relatively inexpensive and readily available.

Total Client Support Murus offers outstanding technical support and professional client services for the duration of the project, as outlined below:

Design and Engineering Murus provides support and technical information to professional specifiers regarding product specifications, structural capabilities, connections, and fastening requirements.

Technical Drawings Murus supports professionals by providing direction and details, or by providing panel layout drawings or shop drawings specific to each job.

Job-Specific Manufacturing Murus manufactures SIPs according to a particular projects's specifications and requirements. Murus SIPs are available in two core materials and in numerous R-values, thicknesses, lengths, and finishes. Murus is here to assist with choosing the best panel system for each project.

Green Building Qualified Murus SIPs are ideal for sustainable building projects as recognized by and listed in the GreenSpec Directory, an independent agency specializing in qualifying green construction products. LEED credits available for Murus SIPs: EA Prerequisite 2—Minimum Energy Performance; EA Credit 1—Optimize Energy Performance.

Environmentally Responsible Because of their ability to significantly reduce heating and cooling loads, Murus SIPs decrease the consumption of fossil fuels, saving our limited resources and minimizing combustion emissions into the atmosphere.

Factory Pre-Cutting Murus SIPs can be pre-cut at our factory on our state-of-the-art computerized CNC equipment. The panels are then labeled to correspond with pre-cut drawings (included) for assembly and installation on site.

On-Site Technical Assistance Factory trained and experienced personnel are available for jobsite consultation and/or technical assistance to professional crews with respect to the proper installation of Murus SIPs. Comprehensive installation manuals are provided with every order.

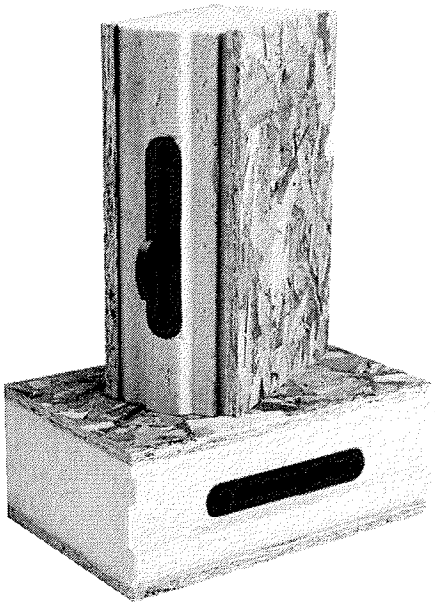

OSB-2100PUR

Polyurethane

Polyurethane Foam Core Murus Polyurethane foam is safe to humans and the environment. It does not contain formaldehyde, CFC's, HCFC's or other ozone depleting compounds and is an organic material made from petroleum by-products and recycled materials. Murus Polyurethane foam provides the highest R-value per inch of thickness of any SIP foam core available.

Polyurethane SIP Manufacturing Process The proprietary Murus manufacturing method, Uniform Dispersion Molding (UDM), is a key component in creating our Polyurethane panel's superior characteristics. The UDM method enhances the properties of the foam and creates the strongest possible bond between the skins. The liquid foam is uniformly dispersed throughout the mold; the foam expands, bonds and cures under 12-14 psi. UDM produces uniform foam density throughout the panel with spherical cells that give the foam superior and uniform strength, as compared to elongated "rice-shaped" cells produced by polyisocyanurate lamination foams.

Cam-Lock System Murus's patented, high-impact plastic Cam-Lock system saves considerably on installation time over other SIP systems, and can offer even greater time savings over conventional stud wall construction. Cam-Locks are located every two feet up the length of the panel edge and are engaged using a provided Cam-Lock wrench. In conjunction with the standard tongue and groove edge profile, Cam-Locks aid in providing a positive seal between panels, helping to eliminate moisture and air infiltration and creating an exceptionally strong, superior building system.

Tongue and Groove Edge Profile The molded tongue and groove edge profile assures quick, proper alignment of panel-to-panel joints. Once installed and sealed with spray foam, the result is a continuous uniformity of insulation that is lacking in spline connection systems.

Electrical Chase A standard electrical chase is embedded horizontally in the foam core of the Murus SIP during manufacturing. Three standard chase height options are available. Additional chase heights can be added; for example, a dedicated chase for countertop receptacle switches or communication wiring.

Faster Construction Time The composite construction of Murus SIPs greatly reduces the amount of time to complete project shell-in.

Superior Energy Efficiency With superior R-values per inch of thickness and consistent insulation through composite construction, a Murus Polyurethane SIP building envelope will offer significant savings on heating and cooling energy, and perform better than other building systems in which air infiltration and thermal bridging and breaks are inherent.

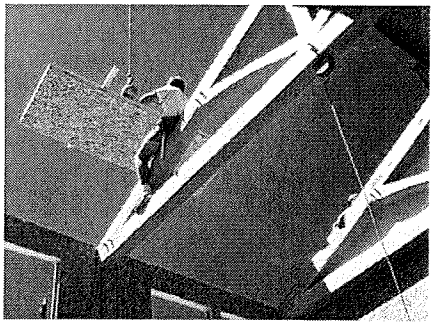

Fire Resistance

The Murus Polyurethane foam core has a Class I fire resistance rating-the best available for combustible materials.

Lifetime Warranty

The Murus lifetime warranty backs Murus Polyurethane SIPs against delamination between the foam core and the skins. Contact Murus for complete warranty information.

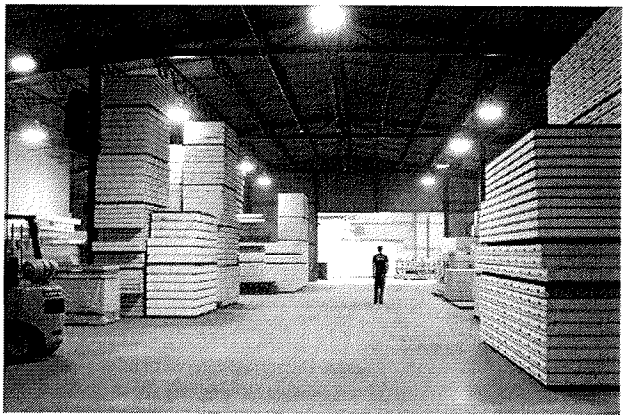

Listed with
PFS, ICC, GreenSpec

Foam Core SIPs

06 12 00/MUR
BuyLine 1605

THE MURUS OSB-2100PUR STRUCTURAL INSULATING PANEL

Dimensions and Weights

Series	2145	2155	2165
OVERALL THICKNESS:	4-5/8"	5-5/8"	6-5/8"
THICKNESS TOLERANCE:	+/- 1/8"	*	*
WIDTH:	48"	*	*
WIDTH TOLERANCE:	+0", -1/8"	*	*
(Finish Size)			
STANDARD LENGTHS:	4', 6', 8', 9', 10', 12',	*	*
(Feet)	14', 16', 18', 20', 22', 24'	*	*
LENGTH TOLERANCE:	+/- 1/4"	*	*
WEIGHT:	3.75 lb./sq. ft.	3.95 lb./sq. ft.	4.15 lb./sq. ft.

Insulating Core

TYPE:	Polyurethane Closed Cell Foam		
THICKNESS:	3-11/16"	4-11/16"	5-11/16"
DENSITY:	2.2 lb./cu. ft.	*	*
R-VALUE:	6.76 per in. thickness	*	*
System R-VALUE:	26	33	40

Insulating Core Properties

	[4]Design Values	
K FACTOR: (aged foam)	.148	ASTM C-518
COMPRESSIVE STRENGTH:	23 psi	ASTM D1621
COMPRESSIVE [1]MOE:	682 psi	ASTM D1621
SHEAR STRENGTH:	31 psi	ASTM C-273
SHEAR MODULUS:	203 psi	ASTM C-273
FLEXURE [2]MOR:	52 psi	ASTM C203
FLEXURE MODULUS ([3]MD):	587 psi	ASTM C203
TENSILE STRENGTH:	37 psi	ASTM D1623
TENSILE MODULUS:	611 psi	ASTM D1623
WVT/PERM INCHES:	1.0	ASTM E-96
FOAM FIRE RATING:	Class 1	**UL723
FLAME SPREAD:	20	**UL723
SMOKE DEVELOPED:	300	**UL723

[1]MOE: Modulus of Elasticity. [2]MOR: Modulus of Rupture. [3]MD: Machine Direction.
[4]Design Values are mean derived from multiple specimens.
*Specification or value is the same as the OSB-2145 Panel.
**UL723 is not necessarily a representation of performance in an actual fire.
Class 1 is the highest rating available for combustible materials.

Outside Skins

TYPE:	APA or equivalent rated oriented strand board (OSB)
GRADE:	Exposure-1
THICKNESS:	7/16"

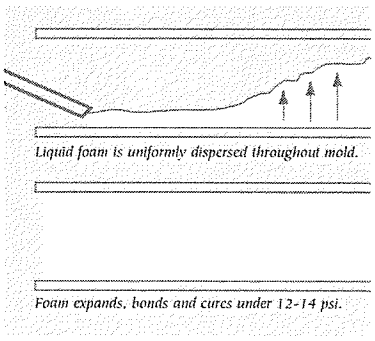

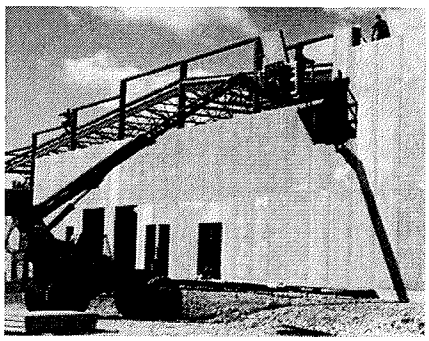

Other Panel Systems Available:

CLAD-2100 (OSB/OSB/PC)	**Exterior Skin.** 7/16" Exposure-1, APA or equivalent rated oriented strandboard (OSB). **Interior Skin (exposed).** 3/4" Standard Grade (kiln dried), WP4-Eastern White Pine, T&G with V-groove face pattern.
PTP-2100 (PT/PT) (Subject to Availability)	**Exterior and Interior Skins.** 1/2" CA .10 - CDX Grade, APA or equivalent rated pressure treated plywood.
CB-2100 (CB/CB)	**Exterior and Interior Skins.** 10 mm (also available in 8 and 12 mm) Cement bonded particle board comprised of wood particles and cement.
BB-2100 (OSB/BB) (Roof Applications Only)	**Exterior Skin.** 7/16" Exposure-1, APA or equivalent rated oriented strandboard (OSB). **Interior Skin.** 1/2" Veneer Base (Blueboard) Gypsum Wall Board.
T-1-11-2100 (OSB/OSB/T-1-11)	**Exterior Skin.** 7/16" Exposure-1, APA or equivalent rated oriented strandboard (OSB). **Interior Skin (exposed).** 5/8" 303-6 Grade (8 in. on center face pattern), T-1-11 pine plywood.
FB-2100 (OSB/FB)	**Exterior Skin.** 7/16" Exposure-1, APA or equivalent rated oriented strandboard (OSB). **Interior Skin.** 1/2" Gypsum Wallboard - Fiber Reinforced.
PTP/FB-2100 (PT/FB) (Subject to Availability)	**Exterior Skin.** 1/2" CA .10 - CDX Grade, APA or equivalent rated pressure treated plywood. **Interior Skin.** 1/2" Gypsum Wallboard - Fiber Reinforced.
CP-2100 (OSB/SB)	**Exterior Skin.** 1/4" Oriented Strand Board (OSB)(7/16" Exposure-1 optional for nailbase). **Interior Skin.** 1/2" Low Density Wood Fiber Composite (Sound Board), Fiber Board Insulating Sheathing.

APPLICATION / SKINS	OSB-2100 (OSB/OSB)	CLAD-2100 (OSB/OSB/PC)	PTP-2100 (PT/PT)	CB-2100 (CB/CB)	BB-2100 (OSB/BB)	T-1-11-2100 (OSB/T-1-11)	FB-2100 (OSB/FB)	PTP/FB-2100 (PT/FB)	CP-2100 (OSB/SB)
LOAD BEARING	●		●						
CURTAIN WALL	●	●	●	●		●	●	●	
ROOF SPANS UP TO 4FT.	●	●	●	●	●	●	●	●	
ROOF SPANS OVER 4FT.	●	●	●	●		●			
RESIDENTIAL CONSTRUCTION	●	●	●						●
COMMERCIAL CONSTRUCTION	●	●	●	●		●	●	●	
STRUCTURAL STEEL FRAMING	●		●	●			●	●	
INSULATED GARAGES	●		●	●					
INSULATED WAREHOUSES	●		●	●			●	●	
TIMBER FRAME STRUCTURES	●	●	●		●	●	●	●	
HEAVY TIMBER RAFTER SYSTEMS	●	●	●		●	●	●	●	
GLUE LAMINATED STRUCTURES	●	●	●			●		●	
MANUFACTURED ROOF TRUSSES	●	●	●			●	●	●	●
TROPICAL CLIMATES			●	●				●	
POOL ENCLOSURES	●		●	●					

Murus EPS Foam Core SIPs

EPS Foam Core Murus EPS (expanded polystyrene) Structural Insulating Panels (SIPs) are a high quality, competitively priced alternative to conventional construction, offering dependable performance and superior R-values.

Murus EPS SIPs are manufactured with the same strict attention to detail and concern for quality as are our Polyurethane SIPs. The EPS SIP manufacturing process differs from that for Polyurethane SIPs in that the foam core is first expanded into a large block, cut to the desired core thickness and then pressure laminated to the skin surfaces. An extremely durable one-part structural urethane adhesive is used which is reacted to set while under pressure. The resulting bond line is stronger than the material it laminates together. Separation of the foam core from the skins, or "delamination" is simply not an issue.

Murus EPS SIPs are installed using wooden key splines to join the panels together. Typical panel-to-panel connection is achieved using two (interior and exterior) plywood key splines. Panels are manufactured with core dimensions that allow dimensional lumber to be incorporated for additional load-bearing support.

Factory Pre-cutting You may choose to have window and door openings pre-cut at our factory using our state-of-the-art CNC pre-cutting equipment, saving valuable field labor time and construction waste disposal expense.

Murus EPS SIPs are available in a variety of thicknesses and sizes up to 8' x 24'. Electrical wiring can be accommodated through the addition of an optional horizontal chase. Additional chase heights can be added; for example, a dedicated chase for countertop receptacle switches or communication wiring.

Fire Resistance The Murus EPS foam core has a Class 1 Fire Resistance rating-the best available for combustible materials.

Environmentally Responsible Murus EPS foam contains no CFC's, HCFC's, HFC's, or formaldehyde. The EPS core is recyclable, and the OSB skins are manufactured for the most part from plantation-raised soft wood timber.

Warranty Murus EPS SIPs carry a limited 10-year warranty against manufacturer's defects in materials and workmanship. Contact Murus for complete warranty information.

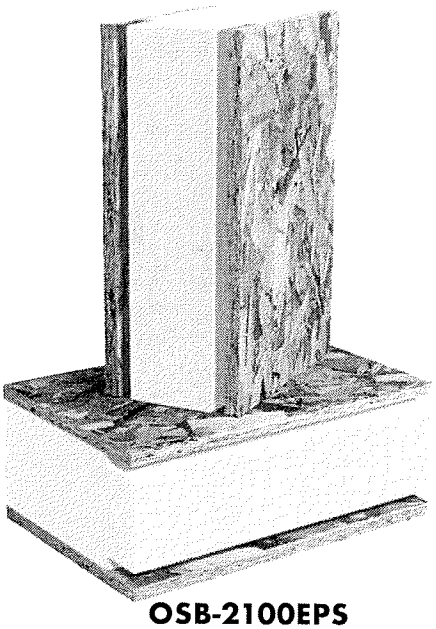

OSB-2100EPS

THE MURUS OSB-2100EPS STRUCTURAL INSULATING PANEL

Dimensions and Weights					
Series	**2145EPS**	**2165EPS**	**2185EPS**	**21105EPS**	**21125EPS**
OVERALL THICKNESS:	4-1/2"	6-1/2"	8-1/4"	10-1/4"	12-1/4"
THICKNESS TOLERANCE:	+/- 1/8"	*	*	*	*
WIDTH:	48" or 96"	*	*	*	*
WIDTH TOLERANCE:	+/- 1/8"	*	*	*	*
STANDARD LENGTHS:					
(48" WIDTHS X):	8', 9', 10', 12', 14', 16', 18', 20', 22' & 24'		*	*	*
(96" WIDTHS X):	24'	*	*	*	*
LENGTH TOLERANCE:	+/- 1/4"	*	*	*	*
WEIGHT:	3.30 lb./sq. ft.	3.50 lb./sq. ft.	3.65 lb./sq. ft.	3.80 lb./sq. ft.	3.95 lb./sq. ft.

Insulating Core					
TYPE:	Expanded Polystyrene Foam				
THICKNESS:	3-5/8"	5-5/8"	7-3/8"	9-3/8"	11-3/8"
DENSITY:	1 lb./cu. ft. (nominal)	*	*	*	*
R-VALUE	3.85 per in. thickness	*	*	*	*
SYSTEM R-VALUE	16	23	30	38	45

Insulating Core Properties	Design Values	
K FACTOR:	.26	ASTM C518
COMPRESSIVE STRENGTH:	10 psi	ASTM D1621
FLEXURAL STRENGTH:	25 psi minimum	ASTM C203
TENSILE STRENGTH:	28 psi minimum	ASTM C-297
SHEAR STRENGTH:	16 psi minimum	ASTM C-273
SHEAR MODULUS:	440 psi minimum	ASTM C-273
MODULUS OF ELASTICITY:	915 psi minimum	ASTM C-203
WVT/PERM INCH:	5.0 maximum	ASTM E96
WATER ABSORPTION (by volume):	4% maximum	ASTM C272
MAXIMUM SERVICE TEMPERATURE:	167 F (long term)	
FOAM FIRE RATING:	Class 1	**ASTM E-84
FLAME SPREAD:	<25	**ASTM E-84
SMOKE DEVELOPED:	<450	**ASTM E-84

* Specification or value is the same as the OSB-2145EPS Panel.
**ASTM E-84 is not necessarily a representation of performance in an actual fire.
Class 1 is the highest rating available for combustible materials.

Outside Skins	
TYPE:	APA or equivalent rated oriented strand board (OSB)
GRADE:	Exposure-1
THICKNESS:	7/16"

Other Panel Systems Available: BB-2100EPS, CLAD-2100EPS, NB-2100EPS

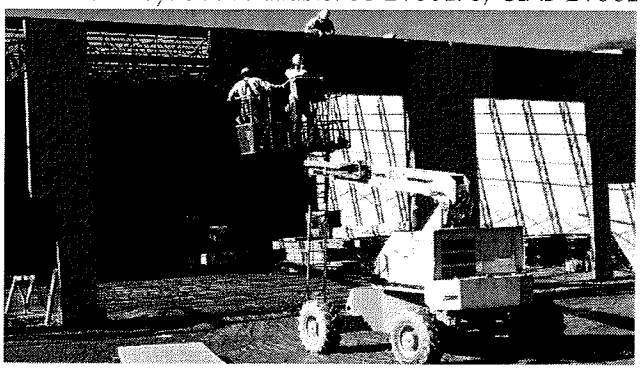

The photography and illustrations within this brochure are for illustrative purposes only. Product information and specifications are as accurate as possible at the time of printing but are subject to change without notice. It is the responsibility of the owner, builder or independent architect, engineer, or designer to provide proper engineering in compliance with all applicable fire and building codes.

murus
STRUCTURAL INSULATING PANELS
P.O. Box 220, 3234 Route 549
Mansfield, PA, USA 16933
Phone 570-549-2100 Fax 570-549-2101
www.murus.com • info@murus.com

LEGACY REPORT

97-36

Reissued June 1, 2003

ICC Evaluation Service, Inc.
www.icc-es.org

Business/Regional Office ■ 5360 Workman Mill Road, Whittier, California 90601 ■ (562) 699-0543
Regional Office ■ 900 Montclair Road, Suite A, Birmingham, Alabama 35213 ■ (205) 599-9800
Regional Office ■ 4051 West Flossmoor Road, Country Club Hills, Illinois 60478 ■ (708) 799-2305

Legacy report on the BOCA® *National Building Code*/1999

DIVISION: 06—WOOD AND Plastics
Section: 06120—Structural Panels

EVALUATION SUBJECT:

MURUS PANELS

MANUFACTURER:

THE MURUS COMPANY
P.O. BOX 220
MANSFIELD, PA 16933

EVALUATION SCOPE

Compliance with the following code:

BOCA® *National Building Code*/1999

- Section 1603.1 General
- Section 1708.1 Where required
- Section 1710.3.1 Test procedure
- Section 2305.7 Wind bracing
- Section 1404.2 Durability
- Section 2603.2 Labeling
- Section 2603.3 Surface burning characteristics
- Section 2313.2 Sandwich panels
- Section 1704.3 Labeling

DESCRIPTION

The Murus Panel is a composite panel used for exterior wall and roof applications. The Murus Panel, when used as an exterior wall panel, is used either as a curtain wall panel, which resists transverse loads only, or an exterior wall panel, which resists axial and transverse loads. The composite panel is 4 1/2 inches thick, 4 feet wide and is available in various lengths. See Figure 1 of this report for a diagram of the Murus Panel.

- Table 1 of this report contains allowable transverse loads and spans for the Murus Panel.
- Table 2 of this report contains allowable loads and spans for Murus Panels subjected to uniform tranverse and concentric axial loads.
- Table 3 of this report contains allowable loads and spans for Murus Panels subjected to uniform tranverse and axial loads with an eccentricity of 3/4 in.
- Table 4 of this report contains the allowable horizontal racking load of the Murus Panel, with and without openings.

■ **Panel Components**

- **Core:** The foam plastic core consists of one of two available foam plastic systems which are as follows: Flexible Products CIP 1416-HC#2 and Flexible Products PPG 442-22D. The Flexible Products CIP 1416-HC#2 core is made up of a rigid urethane foam which consists of an isocyanurate and polyol catalyst blend. The Flexible Products PPG 442-22D core is made up of a rigid urethane foam which consists of an isocyanurate and a resin component blend. The foam plastic cores have a density of 2.2 pounds per cubic feet.
- **Exterior skins:** Each face of the Murus Panel consists of 7/16-inch exterior grade, Exposure 1, Oriented Strand Board (OSB) complying with the United States Department of Commerce PS 2-95 (DOC PS 2-95).
- **Joinery:** The Murus Panel has a tongue-and-groove edge. The connection between the panels is made with a cam lock system, which consists of two parts, as shown in Figure 2 of this report. The cam lock is located along the vertical edge of the Murus Panel at 2-foot intervals, beginning 1 foot from the top or bottom of the panel. Two Murus panels are secured together by aligning two Murus Panels with cam locks next to each other, with spray foam applied to the tongue (or groove) of one panel, and rotating the cam turning gear in the cam lock with a hex head wrench. After the connection is completed, spray foam is applied in the exterior channel between the two panel skins. The excess foam is removed prior to the application of the exterior wall covering.

CONDITIONS OF USE

This report is limited to the applications and products as stated in this report. The ICC-ES Subcommittee on National Codes intends that the report be used by the code official to determine that the report subject complies with the code requirements specifically addressed, provided that this product is installed in accordance with the following conditions:

- Murus Panels shall be installed in accordance with this report and the manufacturer's instructions. Where the manufacturer's installation instructions differ from this report, this report shall be null and void.
- Murus Panels shall be limited to use as an exterior wall or roof panel in Type 5 construction.
- The use of Murus Panels in fireresistance rated wall or roof assemblies is beyond the scope of this report.

- The design loads on the system shall not exceed those given in Tables 1, 2, 3 and 4 of this report. Design values are for normal duration under dry use conditions and temperatures less than 160°F.
- Openings in the Murus Panels shall be limited to the sizes given in Figures 6 and 7 of this report. Openings larger than those shown in Figures 6 and 7 are beyond the scope of this report.
- The routing of chaseways into the Murus Panel wall for electrical, plumbing, HVAC or other purposes is beyond the scope of this report.
- A top in-let plate, as shown in Figure 3 of this report, shall be provided along the top edge of all Murus wall panels. The top in-let plate shall be installed in such a manner as to be continuous through the vertical panel joints. The top in-let plate shall consist of 2-inch by 4-inch dimension lumber. The plate shall be located in a 1 1/2-inch-deep routed channel at the top of the panel with spray foam applied between the foam core and the in-let plate. The OSB faces of the Murus Panel shall be secured to the top plate with 8d nails at 4 inches on center. The fasteners on the OSB faces shall be staggered from each other.
- A bottom in-let plate, as shown in Figure 4 of this report, shall be provided along the bottom edge of all Murus wall panels. The bottom in-let plate shall consist of 2-inch by 4-inch dimension lumber. The foam core of the panel shall be routed to completely embed the in-let plate in the panel, so that the OSB faces of the panel will bear completely on the surface which supports the Murus Panels. The in-let plate is to be fastened securely to the supporting structure as required by the approved construction documents. The void in the Murus Panel is sprayed with foam, as described above, prior to placing the panel over the in-let plate. The Murus Panel is then secured to the in-let plate on both faces with 8d nails at 4 inches on center. The fasteners on the OSB faces shall be staggered from each other.
- Openings in the Murus Panels for door and windows shall be rough framed with 2-inch by 4-inch dimension lumber embedded into the foam core of the panel in the same manner as the top and bottom in-let plates. The lumber framing shall be provided on all sides of the opening, as shown in Figure 5 of this report, and shall be secured to the OSB faces of the panel on both sides with 6d nails at 8 inches on center, staggered.
- The manufacturer shall provide the user of this report with instructions for the erection of Murus Panels. These instructions shall include, but not be limited to, details of panel to panel and panel to other building components interfaces.
- This report is subject to periodic re-examination. For information on the current status of this report, contact the ICC-ES.

ITEMS REQUIRING VERIFICATION

The following items are related to the use of the report subject, but are not within the scope of this evaluation. However, these items are related to the determination of code compliance:

✔ Product identification consistent with this report.

✔ Special inspections in accordance with Section 1705.0 of the BOCA® *National Building Code*/1999, and consistent with the following:

- **SPECIAL INSPECTIONS**

  Special inspections are required for the installation of Murus Panels, in that it is work which is of an unusual design wherein installation, fabrication, erection and placement of components requires special expertise to ensure adequacy. Therefore, the Committee's evaluation of Murus Panels is based upon monitoring and control of the installation of Murus Panels through the use of special inspections in accordance with Section 1705.0 of the BOCA® *National Building Code*/1999. The following items shall be inspected:

  - **Bottom in-let plates, top in-let plates and preparation of rough openings for doors and windows**
    - Foam core of panel properly routed (not over routed) to receive 2-in by 4-in nailer
    - Condition of foam core (clean and dry)
  - **Application of foam spray**
    - Sufficient quantity of spray applied
    - Ambient temperature/substrate temperature
    - Appropriate mix proportions of foam
    - Label on ingredients
  - **Framing of door and window openings**
    - Framing full length on all sides of the opening
    - Framing properly lapped
  - **Fastening of panel to in-let plates and opening framing**
    - Size of fasteners
    - Spacing of fasteners
    - Fasteners on both sides of panel
  - **Cam locks**
    - Properly secured, as required by the manufacturer's installation instructions

✔ Thermal barrier separation, when required, in accordance with Section 2603.4 of the BOCA® *National Building Code*/1999.

✔ Where installed in roofing applications, roof covering complies with the applicable provisions of Chapter 15 of the BOCA® *National Building Code*/1999.

✔ Where installed in exterior wall applications, exterior wall covering complies with the applicable provisions of Chapter 14 of the BOCA® *National Building Code*/1999.

INFORMATION SUBMITTED

STRUCTURAL

- "Structural Evaluation of the Murus Stress-Skin Urethane Sandwich Panel," by Harvey B. Manbeck, P.E., Ph.D, of the NAHB/NRC Designated Housing Research Center at Penn State, dated August 1991, containing the following:
  - Results of adhesion testing of the OSB facers and the foam plastic core material when subjected to ASTM Standard C481-62 Aging Cycle A.
  - Results of flatwise tension testing in accordance with ASTM C297.
  - Results of edgewise compression testing in accordance with ASTM C364.
  - Results of flatwise compression testing in accordance with ASTM C365.
  - Results of flexural testing in accordance with ASTM C393.
  - Results of transverse and compression testing in accordance with ASTM E72.

The results of the above test are the basis for Tables 1 through 3 of this report.

- Results of horizontal racking testing in accordance with a modified version of ASTM E72 performed on Murus Panels with and without door and window openings. The modification was that no stud framing was provided, and the panels were 10 feet high rather than 8 feet high. The panels were secured to the base beam and top beam of the test assembly with #6 sheetrock screws at 8 inches on center. The results of the testing are given in Table 4 of this report. The door and window openings tested are shown in Figures 6 and 7 of this report.

- Report No. 30, "Creep Behavior of the Murus Stress-Skin Urethane Composite Sandwich Panel," by Harvey B. Manbeck, P.E., Ph.D, of the NAHB/NRC Designated Housing Research Center at Penn State, dated January 1993, containing results of testing in accordance with Section 1710.3.1 of the BOCA® *National Building Code*/1999.

- Celotex Corporation Testing Services, MTS Job No. 258498, dated June 3, 1998 and June 29, 1998, containing results of tensile, compressive, flexural and shear testing of the CIP 14-8557(PPG 442-22D) foam plastic in accordance with ASTM D1623, ASTM D1621, ASTM C203 and ASTM C273. The results indicate that the CIP 14-8557(PPG 442-22D) foam plastic has structural properties at least equivalent to the CIP 1416-HC#2 foam plastic.

FOAM PLASTIC

- Omega Point Laboratories, Report No. 8926-98159, dated March 2, 1995, containing results of testing of the Flexible Products CIP 1416-HC#2 foam plastic in accordance with ASTM E84 at a thickness of 1 in and 5 3/4 in.

- Omega Point Laboratories, Report Nos. 9056-103120 and 9056-103121, dated May 11, 1998, containing results of testing of the Flexible Products CIP 14-8557(PPG 442-22D) foam plastic in accordance with ASTM E84 at a thickness of 5 3/4 in.

LABELING

- The Murus Company, *Quality Control Manual*, dated March 1999, Revision D, signed by representatives of the Murus Company and PFS Corporation, containing procedures for the manufacture of the Murus Panel, in-house plant inspections, and product labeling.

APPLICATION FOR PERMIT

To aid in the determination of compliance with this report, the following represents the minimum level of information to accompany the application for permit:

- The language "See ICC-ES Legacy Report No. 97-36" or a copy of this report;

- Manufacturer's name.

- Product model name and number.

- Design calculations and details for construction utilizing Murus Panels shall be furnished to the code official verifying compliance with this report. The individual preparing such documents shall be competent and qualified in the application of the structural design principals involved, and shall possess the registration or license in accordance with the professional registration laws of the state in which the project is constructed. The calculations shall include, but not be limited to, the following:

  - The minimum required design loads for the building for the building system, consistent with the requirements of Chapter 16 of the BOCA® *National Building Code*/1999.

  - The allowable design loads of the panels, consistent with this report.

  - The ability of all connections between the panel and adjacent building components to transfer all the imposed design loads to the building foundation and footing system.

  - Details of panel openings, consistent with this report.

- Statement of Special Inspections

PRODUCT IDENTIFICATION

- Murus Panels or product packaging shall be marked at the plant with the identifying language "See ICC-ES Legacy Report No. 97-36."

- Additionally, each panel shall bear a label containing the manufacturer name, product name, and identification of the inspection agency, PFS Corporation.

This report is subject to re-examination in one year.

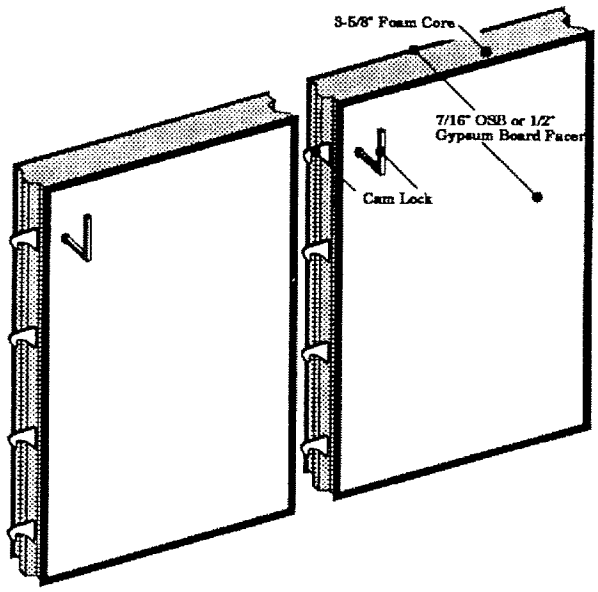

FIGURE 1—*MURUS PANELS

The panels are 48 inches wide. Cam Locks, if provided, are located 1 ft. from the top and bottom and at 2 ft. intervals in between.

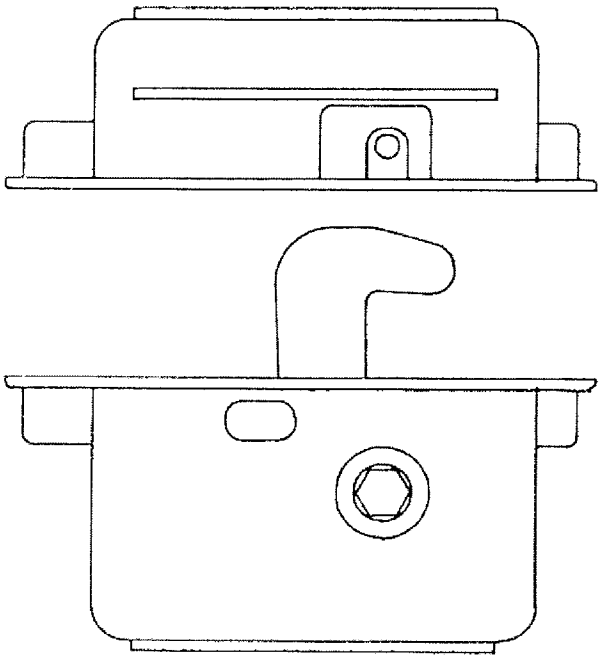

FIGURE 2*—CAM LOCK

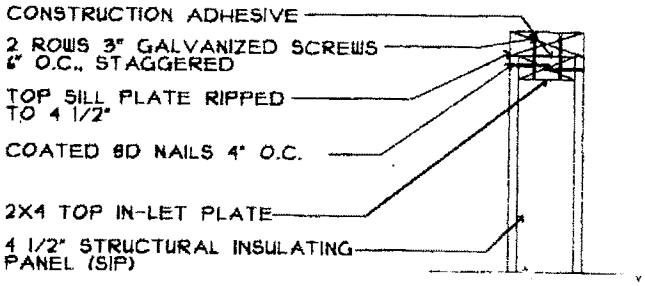

FIGURE 3*—TOP IN-LET PLATE

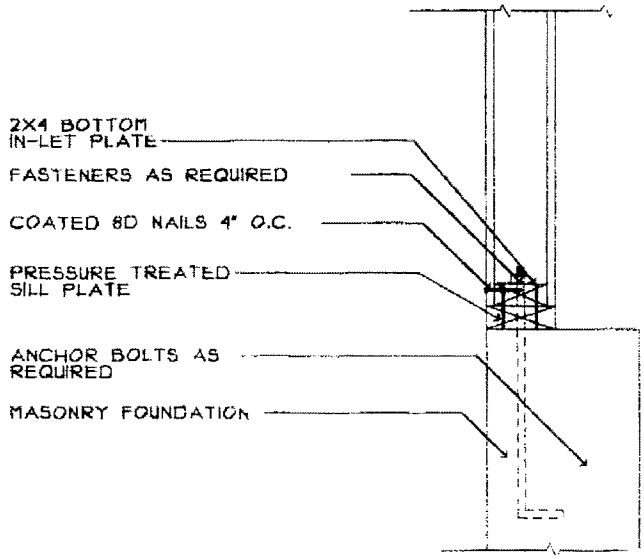

FIGURE 4*—BOTTOM IN-LET PLATE

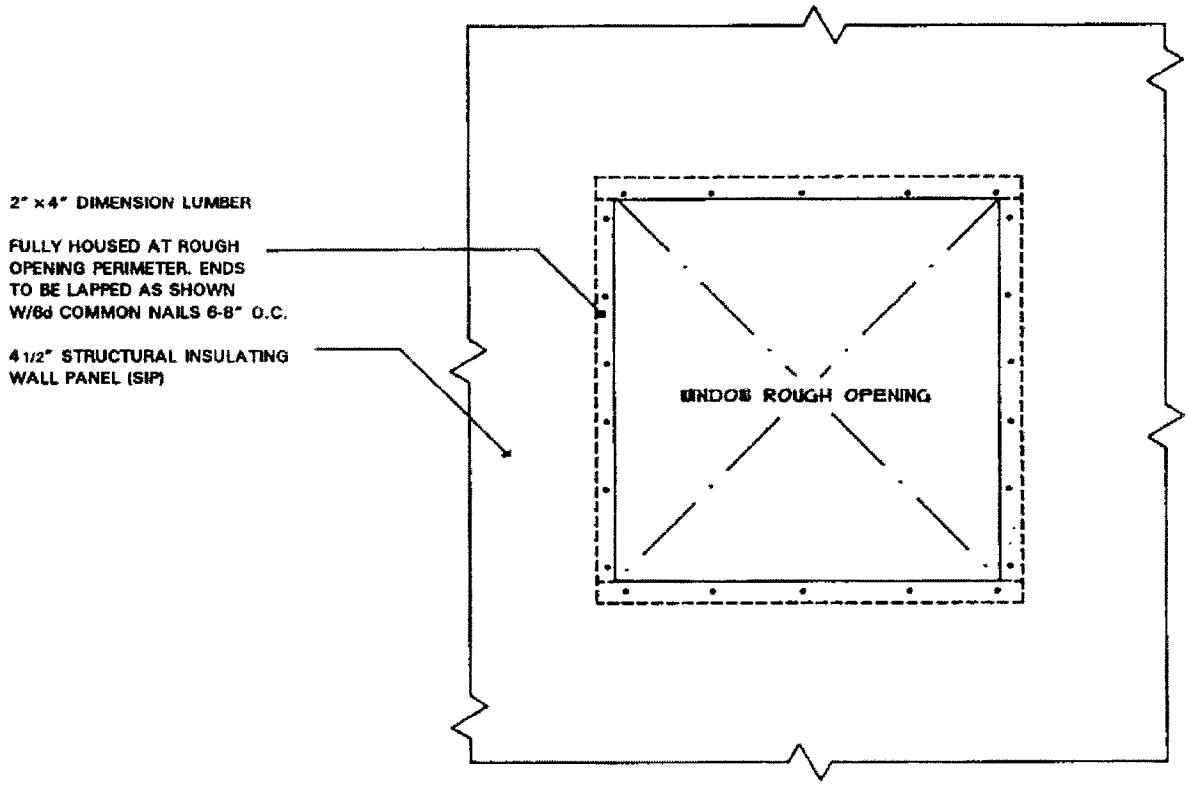

FIGURE 5*—FRAMING AT ROUGH OPENINGS FOR WINDOWS AND DOORS

TABLE 1
TRANSVERSE LOAD-SPAN TABLE FOR THE MURUS PANEL
(Customary Units)

UNIFORM TRANSVERSE LOAD [1] (psf)	ALLOWABLE PANEL SPAN [2, 3, 4] (ft - in)			
	DEFLECTION LIMITS			
	L/180	L/240	L/360	L/480
5	20'-8"	18'-9"	16'-4"	14'-9"
10	16'-4"	14'-9"	13'-0"	11'-9"
15	14'-3"	13'-0"	11'-4"	10'-3"
20	13'-0"	11'-9"	10'-3"	9'-4"
25	12'-1"	11'-0"	9'-7"	8'-8"
30	11'-4"	10'-3"	9'-0"	8'-2"
35	10'-9"	9'-9"	8'-7"	7'-9"
40	10'-3"	9'-4"	8'-2"	7'-6"
45	9'-11"	9'-0"	7'-10"	7'-2"
50	9'-7"	8'-8"	7'-7"	6'-11"
55	9'-3"	8'-4"	7'-4"	6'-8"
60	9'-0"	8'-2"	7'-2"	6'-6"
65	8'-9"	8'-0"	7'-0"	6'-3"
70	8'-7"	7'-9"	6'-9"	6'-2"
75	8'-4"	7'-7"	6'-8"	6'-0"
80	8'-2"	7'-5"	6'-9"	5'-11"

1. Uniform load for normal load durations only.
2. Values given are for full (four foot) panel widths with facing strands oriented parallel to the panel span assuming proper end support and connections. The transverse load-carrying capacity of panels that contain openings is beyond the scope of this report.
3. Values given are computed from the continuous span uniform deflection equation using the flexural stiffness parameter $(EI)_g$ developed from the full scale transverse panel assembly test of the Murus Panel (ASTM E72-80).
4. Design values are for normal load duration under dry use conditions and temperatures less than 160°F.

TABLE 2
ALLOWABLE AXIAL LOAD/UNIT WIDTH FOR THE MURUS PANEL WITH NO ECCENTRICITY
(Customary Units)

TRANSVERSE LOAD[1] psf	ALLOWABLE AXIAL LOAD*[1, 2, 3, 4] lb/ft										
	PANEL LENGTHS ft										
	4	5	6	7	8	9	10	11	12	13	14
0	9025	8720	8165	7250	5870	4640	3755	3105	2610	2220	1915
2	8975	8630	8030	7075	5690	4470	3600	2955	2460	2080	1775
4	8920	8540	7900	6905	5510	4310	3445	2805	2315	1940	1635
6	8865	8455	7765	6740	5340	4150	3295	2660	2175	1800	1500
8	8815	8365	7640	6575	5170	3990	3145	2515	2035	1660	1365
10	8760	8275	7510	6415	5005	3840	3000	2375	1900	1530	900*
12	8710	8190	7380	6255	4840	3690	2855	2235	1765	1240*	35*
14	8655	8100	7255	6100	4685	3540	2715	2100	1630	435*	NP
16	8600	8015	7130	5950	4530	3395	2575	1965	1180*	NP	NP
18	8550	7925	7010	5800	4375	3250	2440	1835	440*	NP	NP
20	8495	7840	6885	5650	4230	3110	2305	1665*	NP	NP	NP
22	8445	7755	6765	5505	4080	2975	2170	990*	NP	NP	NP
24	8390	7670	6645	5365	3940	2835	2040	310*	NP	NP	NP
26	8340	7585	6525	5220	3795	2705	1910	NP	NP	NP	NP
28	8285	7500	6410	5085	3655	2570	1590*	NP	NP	NP	NP
30	8235	7415	6295	4945	3520	2440	975*	NP	NP	NP	NP

* Load limited by L/240 deflection criterion

NP = Not Permitted

1. Uniform transverse and axial loads are for normal load durations only.
2. Values given are for full (four foot) panel widths with facing strands oriented parallel to the panel span assuming proper end support and connections. The load-carrying capacity of panels that contain openings is beyond the scope of this report.
3. Values given are computed from the combined load case and limiting deflection criterion using the flexural stiffness parameter $(EI)_g$ developed from the full-scale transverse panel assembly test of the Murus Panel (ASTM E72-80), F_c developed from the compression edgewise test of the Murus Panel (ASTM C364-61), F_b from published data for Oriented Strand Board.
4. Design values are for dry end use conditions and temperatures less than 160°F.

TABLE 3
ALLOWABLE AXIAL LOAD/UNIT WIDTH FOR THE MURUS PANEL WITH A 0.75-IN. ECCENTRICITY

TRANSVERSE LOAD[1] psf	ALLOWABLE AXIAL LOAD*[1, 2, 3, 4] lb/ft										
	PANEL LENGTHS ft										
	4	5	6	7	8	9	10	11	12	13	14
0	4925	4605	4245	3835	3340	2930	2570	2260	1990	1765	1565
2	4895	4560	4190	3765	3260	2840	2475	2155	1885	1655	1455
4	4870	4520	4135	3695	3180	2755	2380	2055	1780	1545	1345
6	4845	4482	4080	3625	3100	2665	2285	1955	1680	1440	1130*
8	4815	4440	4025	3555	3020	2575	2190	1860	1575	1170*	760*
10	4790	4400	3970	3490	2945	2490	2095	1760	1335*	840*	385*
12	4760	4355	3915	3420	2865	2405	2005	1630*	1045*	510*	NP
14	4735	4315	3860	3350	2785	2320	1915	1380*	755*	180*	NP
16	4705	4275	3805	3280	2710	2235	1820	1128*	460*	NP	NP
18	4680	4235	3750	3215	2630	2150	1640*	875*	170*	NP	NP
20	4650	4195	3695	3145	2555	2065	1420*	620*	NP	NP	NP
22	4625	4155	3640	3080	2480	1980	1205*	365*	NP	NP	NP
24	4595	4115	3585	3010	2400	1895	990*	115*	NP	NP	NP
26	4570	4070	3530	2945	2325	1770*	775*	NP	NP	NP	NP
28	4540	4030	3475	2880	2250	1585*	555*	NP	NP	NP	NP
30	4515	3990	3420	2810	2175	1405*	340*	NP	NP	NP	NP

* Load limited by L/240 deflection criterion

NP = Not Permitted

1. Uniform transverse and axial loads are for normal load durations only.
2. Values given are for full (four foot) panel widths with facing strands oriented parallel to the panel span assuming proper end support and connections. The load-carrying capacity of panels that contain openings is beyond the scope of this report.
3. Values given are computed from the combined load case and limiting deflection criterion using the flexural stiffness parameter $(EI)_g$ developed from the full-scale transverse panel assembly test of the Murus Panel (ASTM E72-80), F_c developed from the compression edgewise test of the Murus Panel (ASTM C364-61), F_b from published data for Oriented Strand Board, and an eccentricity of 0.75 inch, the same as required in the compression test of the Murus Panel (ASTM E72-80).
4. Design values are for dry end use conditions and temperatures less than 160°F.

TABLE 4
HORIZONTAL RACKING RESISTANCE OF MURUS PANELS

Panel Assembly	Allowable Racking Resistance [1]	
	lbs	plf
Full Panel Assemblies	430	53.75
Panel with Door Opening[2]	400	50
Panel with Window Opening[2]	430	53.75

1. The connection at the head and sill of the panel shall conform to Figures 3 and 4 of this report.
2. The size of the door and window openings shall not exceed those shown in Figures 6 and 7 of this report, and the opening shall be rough framing with 2x4 dimension lumber, as shown in Figure 5 of this report.
3. The values in this table were obtained from panels attached with sheet rock screws at 8 inch on center.

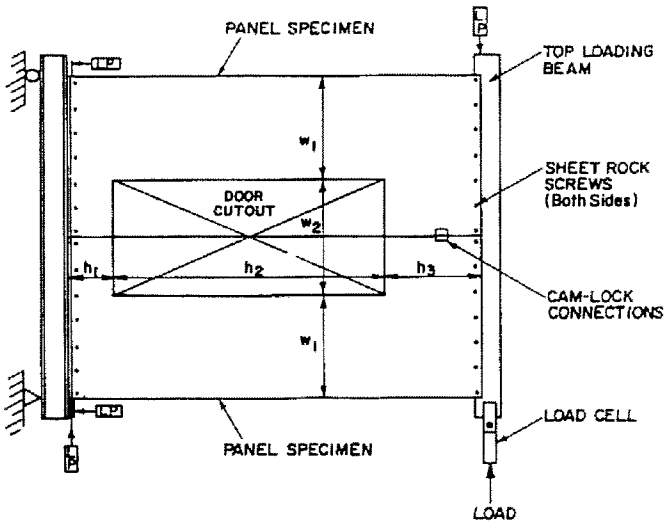

FIGURE 6*
PANEL TESTED WITH DOOR OPENING

h_1 = 12 inches (30 cm)
h_2 = 84 inches (210 cm)
h_3 = 24 inches (60 cm)
w_1 =29 1/4 inches (74 cm)
w_2 = 37 1/2 inches (95 cm)

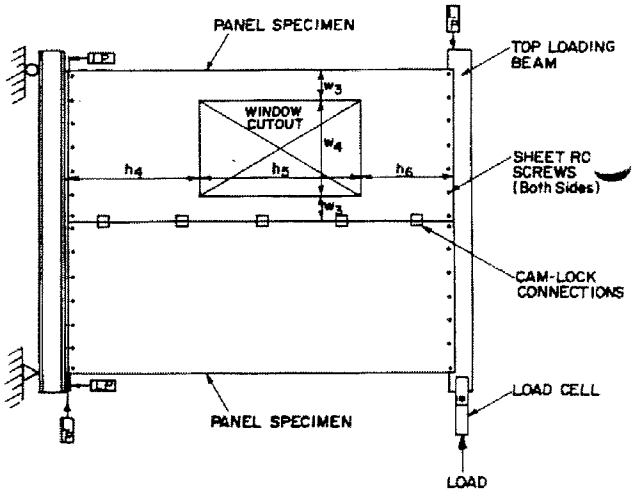

FIGURE 7*
PANEL TESTED WITH WINDOW OPENING

h_4 = 42 inches (107 cm)
h_5 = 54 inches (137 cm)
h_6 = 24 inches (60 cm)
w_3 = 8 inches (20 cm)
w_4 = 32 inches (81 cm)

*THESE DRAWINGS ARE FOR ILLUSTRATION PURPOSES ONLY. THEY ARE NOT INTENDED FOR USE AS CONSTRUCTION DOCUMENTS FOR THE PURPOSE OF DESIGN, FABRICATION OR ERECTION.

The FastenMaster HeadLok: Three great points. One great product.

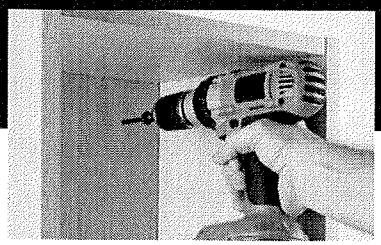

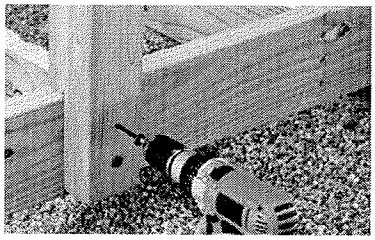

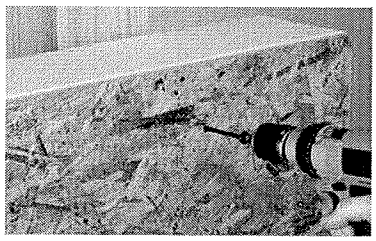

The FastenMaster HeadLok has been engineered from head to point to take on the toughest fastening challenges. One of the three point-styles will cut through virtually any building material. Then the wide flat head will lock things in place.

From wood beam connections, to SIP construction, to nail board attachment, the FastenMaster HeadLok will help you get it done Faster, Easier, Stronger.

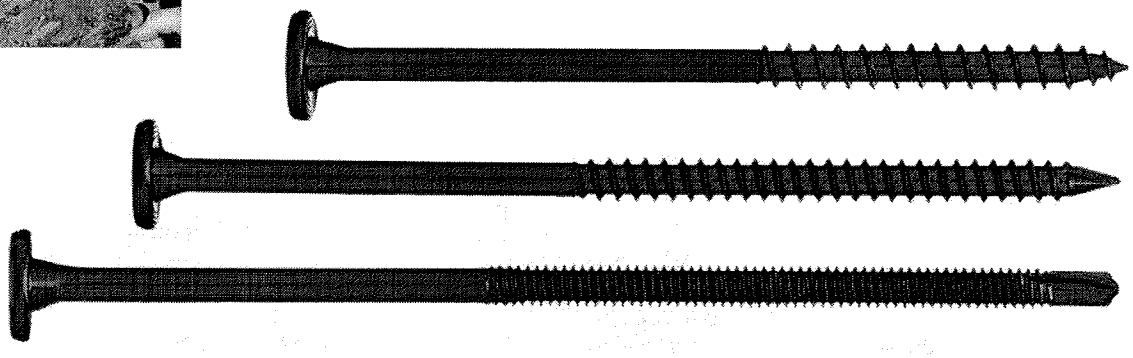

Introducing Spider Drive: Cam Out Is Out

FastenMaster now features a revolutionary new ***Spider Drive***™ system with our patent pending drive system. The most positive internal drive system on the market eliminates cam out.

Spider Drive's 8 arms or splines and HeadLok's built-in flat washer head for complete lock down, combine for an unbeatable fastening system.

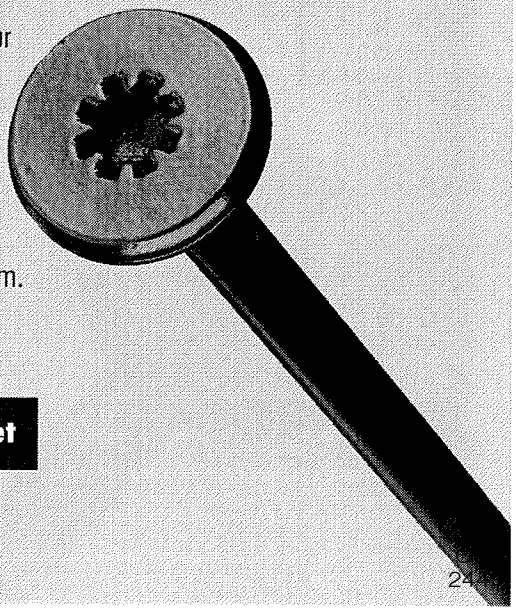

FREE Spider Drive Bits inside every box/bucket

The Gimlet Point Heavy Duty Flat Head Wood Fastener.

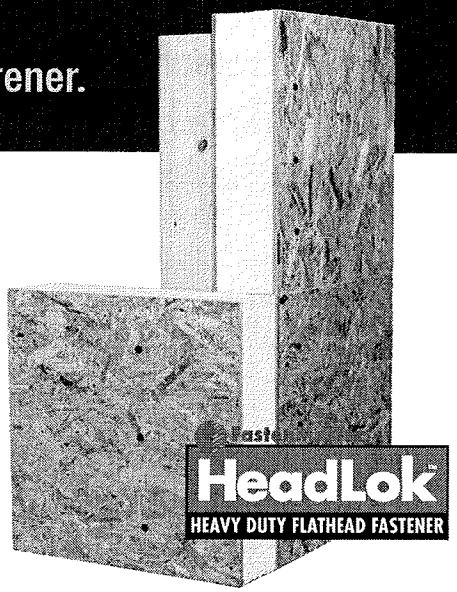

With its gimlet point and aggressive threads, nothing cuts through OSB and solid wood faster than FastenMaster Headlok.

HeadLok bites and holds without "spin out." For wide ranging applications such as SIP and 2-3-4 ply dimensional wood projects demanding a head that doesn't countersink, HeadLok is the right choice.

The Spade Point For Light Gauge Metal.

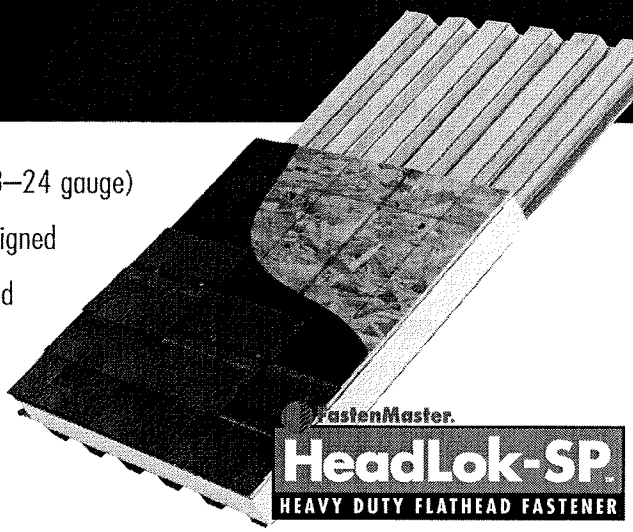

For fastening nailboard, SIPs, or wood to light gauge metal (18–24 gauge) HeadLok SP gets it done like no other fastener. Its specially designed spade point and increased TPI (threads per inch) cut through and lock materials together with no predrilling and no backing out.

The Drill Point for Heavy Gauge Steel.

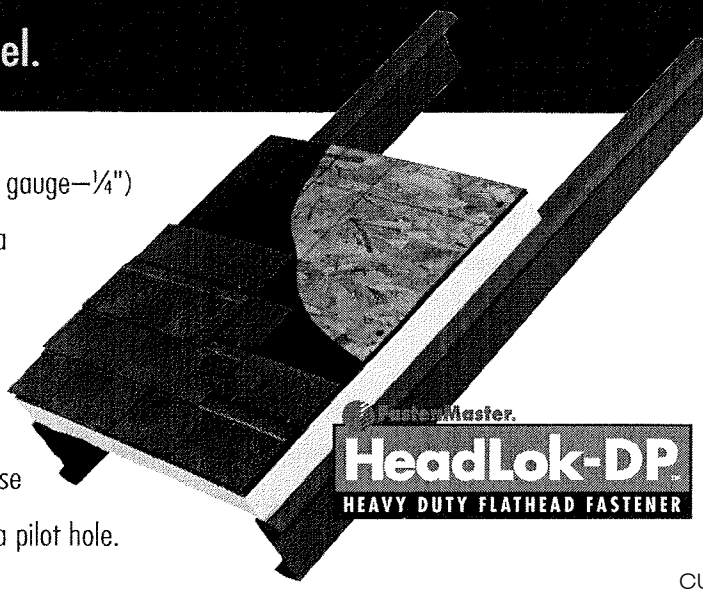

When you need to drive through heavy gauge metal (14 gauge–¼") to attach nailboard, SIPs, or wood the HeadLok DP with a redesigned drill point and increased TPI is the one to use.

Nothing engages heavy gauge metal (up to ¼") like HeadLok DP, getting you the strong hold you need without back out. And HeadLok DP saves you time because the drill point gets through thick steel without predrilling a pilot hole.

THE OLYMPIC INSULATED PANEL FASTENER

- 100% AMERICAN MADE
- FAST, ONE STEP INSTALLATION
  –NO PREDRILLING NEEDED
  –NO PLATES NEEDED
- LOW PROFILE PANCAKE HEAD DOES NOT "TELEGRAPH" THROUGH COVERING LAYER
- EXTREMELY HIGH PULLOUT AND PULL THROUGH STRENGTH
- REMOVABLE – PERFECT FOR TEMPORARY WORK OR INSTALLATION ERROR
- ELIMINATES JARRING AND DAMAGE CAUSED BY A HAMMER AND NAIL

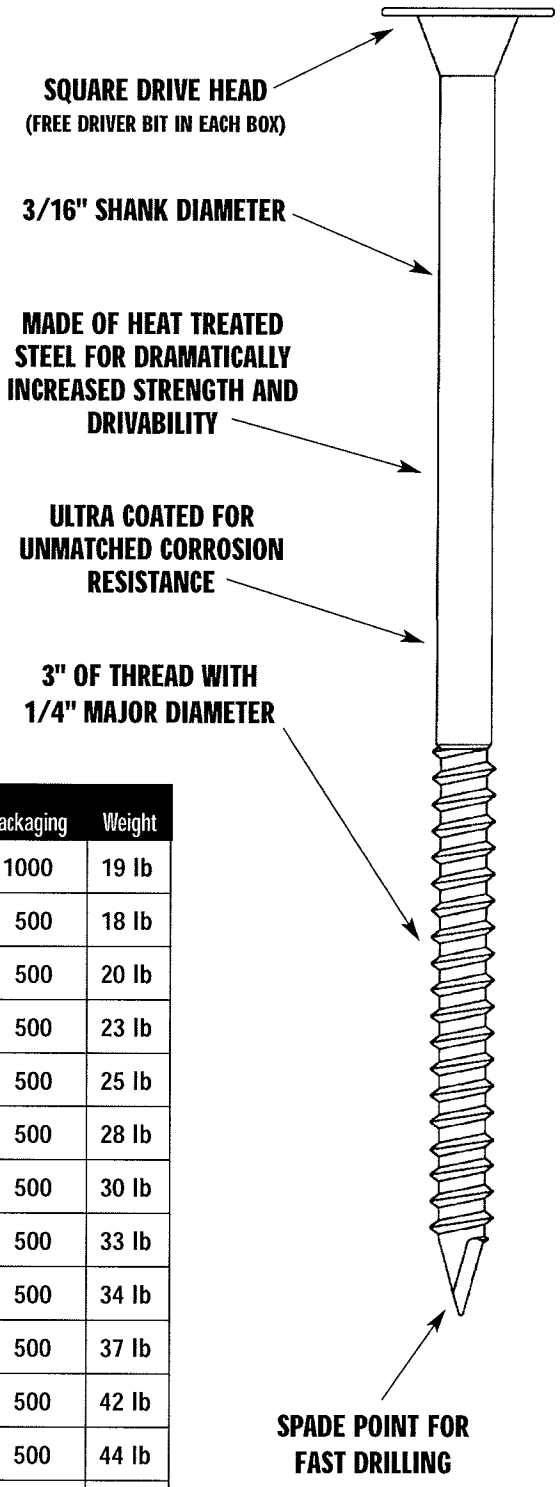

PHYSICAL DATA	Cat. No.	Length	Thread Length	Packaging	Weight
Thread Diameter: .240 Shank Diameter: .190 Head Style: Pancake head with internal square drive	SIP158	1⅝"	FULL	1000	19 lb
	SIP004	4"	3"	500	18 lb
	SIP412	4½"	3"	500	20 lb
	SIP005	5"	3"	500	23 lb
	SIP512	5½"	3"	500	25 lb
	SIP006	6"	3"	500	28 lb
	SIP612	6½"	3"	500	30 lb
	SIP007	7"	3"	500	33 lb
	SIP712	7½"	3"	500	34 lb
	SIP008	8"	3"	500	37 lb
	SIP009	9"	3"	500	42 lb
	SIP010	10"	3"	500	44 lb
	SIP011	11"	3"	500	47 lb
	SIP012	12"	3"	500	50 lb
	SIP013	13"	3"	500	52 lb
	SIP014	14"	3"	500	53 lb

Southco® Draw Latches

Adjustable Series, Small and Medium Sizes

- **Hooked Latching Rod**
- **Latching arm adjusts to fit your grip range**
- **Steel or Stainless Steel available**

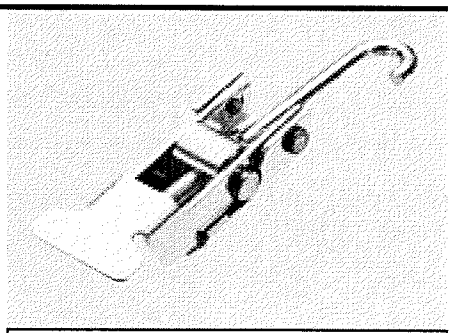

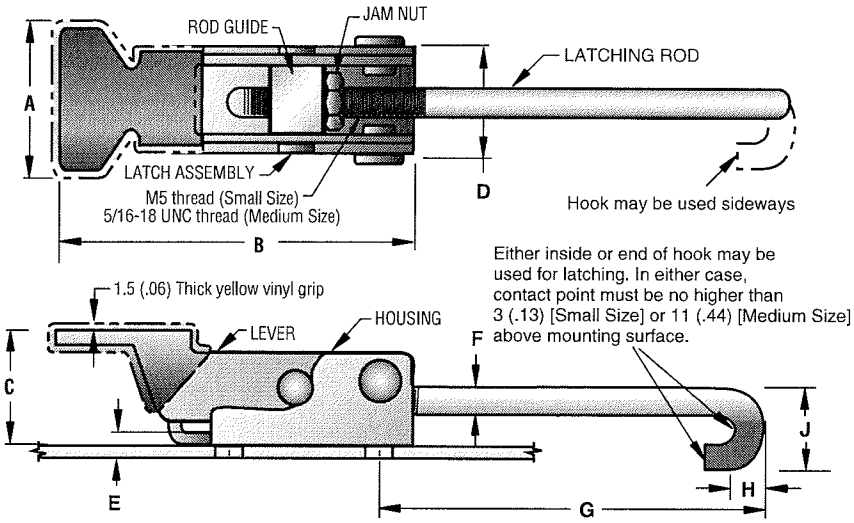

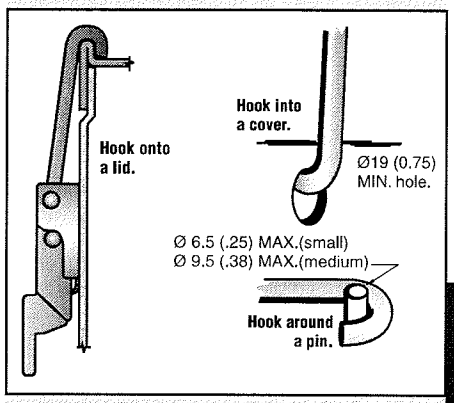

SIZE	DIMENSIONS									
	A	B	C	D	E	F	G MIN.	G MAX.	H REF.	J
Small	27 (1.06)	68 (2.66)	20 (.78)	21 (.82)	1.6 (.060)	4.4 (.17)	39 (1.5)	59 (2.3)	6 (.24)	17 (.67)
Medium	40 (1.56)	113 (4.45)	32 (1.25)	31 (1.21)	1.9 (.075)	7 (.27)	79 (3.13)	113 (4.44)	9 (.36)	25 (1.00)

PART NUMBERS	
Steel, zinc plated	Stainless steel, passivated
Small Size without **yellow** vinyl grip	
A1-11-502-10 •	A1-11-502-40 •
Small Size with **yellow** vinyl grip	
A1-11-502-20 •	A1-11-502-50 •
Medium Size without **yellow** vinyl grip	
	A1-11-702-40 •
Medium Size with **yellow** vinyl grip	
A1-11-702-20 •	A1-11-702-50 •

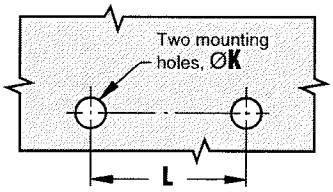

INSTALLATION DIMENSIONS	
ØK ±0.1 (±005)	L ±0.2 (±.010)
Small Size	
5.3 (.209)	25.5 (1.00)
Medium Size	
6.5 (.257)	44.5 (1.750)

Material and Finish

Steel Version

LEVER and HOUSING: 1010 Steel. ROD GUIDE and JAM NUT: Low carbon steel. ROD: 1008 Steel. ALL STEEL PARTS are zinc plated plus bright chromate dip. RIVET: 302 Stainless steel, passivated. GRIP: Vinyl, yellow.

Stainless Steel Version

LEVER and HOUSING: 304 Stainless steel. ROD GUIDE: 303 Stainless steel. JAM NUT: 300 Stainless steel. ROD and RIVET: 300 Series Stainless steel. ALL STAINLESS STEEL PARTS are passivated. Available with or without yellow vinyl grip.

To adjust

1. With lever in latched position, turn latching rod until desired tension is reached.

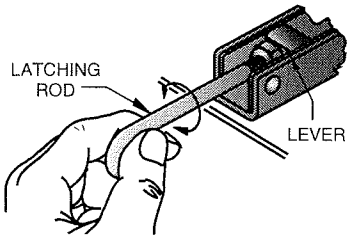

2. Raise lever. While holding latching rod to prevent rotation, tighten jam nut hard against rod guide using an open end wrench.

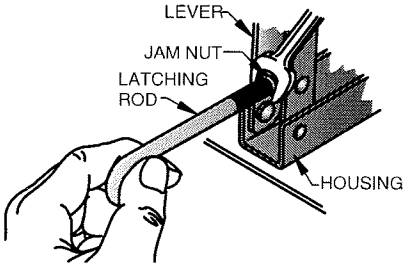

Product Strength Guidelines

(To assist in your product selection; samples are available for your evaluation.)

Latched at end of hook	Small	Medium
Maximum static load	1200 N (270 lbs.)	1780 N (400 lbs.)
Average ultimate load	1800 N (400 lbs.)	2270 N (510 lbs.)
Latched at center of radius	**Small**	**Medium**
Maximum static load	1350 N (300 lbs.)	3110 N (700 lbs.)
Average ultimate load	1700 N (380 lbs.)	4900 N (1100 lbs.)

Dimensions without tolerances are for reference only.

SPECIFICATION SHEET (C.S.I. FORMAT)

FILLER KING LAMINATED ROOF DECKING

PART 1 – GENERAL

Filler King laminated roof decking provides the elegance of exposed wood while also providing a load supporting deck for snow or other roof loads. Lengths may be specified or random and up to 24 ft. Filler King decking may also be used for resisting light diaphragm forces with nailing alone or may be used to resist heavy diaphragm forces in combination with structural sheathing.

1.1 SUMMARY

A. Work Includes: furnish and install roof decking with required fasteners in accordance with building code, manufacturer, and engineering (where applicable) requirements.

1.2 SYSTEM DESCRIPTION

A. Glued-laminated decking:

1. Species (face): Douglas fir – Larch, Ponderosa Pine, Inland Red Cedar, Alaska Yellow Cedar

2. Sizes: nominal (actual): 2x6 (1-7/16 in. x 5 in.); 3x6 (2-3/16 in. x 5-1/4 in.); 4x6 (2-7/8 in. x 5-1/4 in.); and 5x6 (3-21/32 in. x 5-1/4 in.)

   2x8 (1-7/16 in. x 6-3/4 in.); 3x8 (2-3/16 in. x 7 in.); 4x8 (2-7/8 in. x 7 in.); and 5x8 (3-21/32 in. x 7 in.)

3. Appearance Grades: Decorative, Rustic, Supreme, or Industrial

4. Lengths: Random or Specified

5. Pattern: Center Matched-End Matched-Edge Vee One Side (CM-EM-EV1S) or other (specify)

6. Face (finish): Sanded or other (specialty)

7. End Joints: End-matched or Square

8. Decking Layup: Simple Span, Two-span Continuous, Controlled Random Layup, Combination Simple and Two-span, or other.

9. Tongue-and-Groove: Single for 2 in., 3 in., and 4 in.; Double for 5 in.

B. Design:

1. Decking species and size shall satisfy applicable building codes in accordance with decking layup selected.
2. Allowable load determined in accordance with timber decking design formulas in the *Timber Construction Manual,* or other accepted engineering practice.
3. Design values (allowable stresses and modulus of elasticity) provided by Filler King Company.
4. Load-Span tables from Manufacturer may be used where applicable and approved by building official.
5. Light diaphragm wind/seismic force resistance may be achieved with prescribed nailing per *National Design Specification for Wood Construction, Special Design Provisions for Wind and Seismic (NDS SDPWS)*.
6. Heavy diaphragm wind/seismic force resistance may be achieved with combined use of wood structural panel sheathing per *NDS SDPWS*.
7. Laminated timber decking may be used in fire resistance as Heavy Timber Decking where approved.

C. Fasteners:

1. Face nailing to support members and course-to-course slant nailing per Manufacturer.
2. Engineered fastening schedule where applicable for structural diaphragm.

D. Structural Sheathing (where applicable)

1. Furnish and install wood panel structural sheathing by other where required as blocked structural diaphragm
2. Engineered fastening schedule sheathing to decking and framing

E. Other Roof Components: not included in this specification

1. Structural framing members
2. Waterproofing and moisture barrier
3. Insulation
4. Roof surface
5. Ceiling and acoustical surface (if applicable)

F. Board Foot Measure

1. Quantities and pricing of glued laminated decking are in Board-Foot Measure of laminating stock as defined by the Western Wood Products Association.

G. References

1. *Timber Construction Manual*, American Institute of Timber Construction, 7012 S. Revere Parkway, Suite 140, Englewood, CO, 80112 (under Structural Systems).
2. *National Design Specification for Wood Construction, Special Design Provisions for Wind and Seismic*, American Forest and Paper Association / American Wood Council, 111 Nineteenth Street, NW, Suite 800, Washington, D.C., 20036 .
3. American Wood Council Wood Construction Data 2, Tongue and Groove Roof Decking, American Forest and Paper Association / American Wood Council, 111 Nineteenth Street, NW, Suite 800, Washington, D.C., 20036.

1.3 SUBMITTALS

A. Quantity: submit board foot of decking required based on square foot of surface covered, layup, decking lengths, and trim waste.

1.4 QUALITY ASSURANCE

A. Glued Laminated Decking

1. Lamination lumber stock: graded to American Softwood Lumber Standard Grading Provisions.
2. Lumber moisture content: 10 – 12 % average; maximum 15 %.
3. Lamination adhesive: fully exterior phenolic – resorcinol, in compliance with ASTM D2559.
4. Glue line bonding, lumber grading, and manufacturing certified by the Western Wood Products Association, complying with AITC Standard 200 – 2004.
5. Lamination joints: structural finger joints for face and back.

B. Fasteners (by Others)

1.5 DELIVERY STORAGE AND HANDLING

A. Delivery

1. Verify manufacturer, species, size, appearance grade, lengths, pattern, face finish, and end joints

B. Storage

1. Decking units are to be stored on a level area with adequate blocking to avoid warping.
2. Filler King wrapping or other water-resistant wrapping should be used on top and sides where stored in uncovered locations. Water resistant wrap should be `open' at bottom to prevent moisture trapping against decking.
3. Decking must also be separated from ground moisture during storage.

C. Handling

1. Decking units and pieces shall not be dropped or dragged and shall be handled in a way to prevent surface, tongue and groove, and other damage.

PART 2 – PRODUCTS

2.1 MANUFACTURER

A. Filler King Company, P.O. Box 185, 4318 Pioneer Road, Homedale, ID 83618, (208) 337-3134, www.FillerKing.com.

2.2 MATERIALS

A. Glued Laminated Decking Species (choose face species):

1. Douglas Fir – Larch
2. Ponderosa Pine
3. Inland Red Cedar
4. Alaska Yellow Cedar

B. Size (choose nominal size, in. x in.): 2 x 6, 2 x 8, 3 x 6, 3 x 8, 4 x 6, 4 x 8, 5 x 6 or 5 x 8

C. Appearance Grade (of face, choose):

1. Decorative – most popular with face of sound, tight knots.
2. Rustic – nice knotty face, allowing some small knot holes and small season checks.
3. Supreme – highest grade, where a “clear” face is desired.
4. Industrial – for roof applications where strength is more important the appearance.

D. Lengths (choose):

1. Specific lengths and quantities, or
2. Random

E. Standard Pattern: Center Matched-End Matched-Edge Vee One Side (written as CM-EM-EV1S); or other (specify).

F. Face: Sanded (Standard); or other (specify).

G. End Joints: End-Matched (Standard) or Square.

H. Moisture Content: not to exceed 15 % at time of manufacture.

I. Pre-Factory Finish (if any, specify).

PART 3 – EXECUTION

3.1 SUPPORTING FRAMING

A. Supporting framing members shall be straight and true and clear of debris and excess moisture.

B. Framing member spacing shall not exceed value used in load-span tables or as otherwise used to determine decking species, size, and layup.

C. Layup rules are per American Wood Council Wood Construction Data 2 (AWC WCD 2).

3.2 DECKING

A. Decking pieces shall be supported by framing members as prescribed by manufacturer per layup choice.

B. Pieces damaged on site shall not be used.

C. Adjoining and adjacent decking pieces shall be tight.

D. Decking shall not be installed when or where moisture content of pieces exceeds 15 %.

E. Fastener size, type, and locations shall be per Manufacturer for non-engineered construction.

F. Fasteners for engineered construction shall be specified by Engineer-of-Record.

3.3 OTHER

A. Installation of roof decking shall be coordinated with other framing and trades.

B. Fasteners used for other roof materials shall not fully penetrate decking taking into consideration of shrink-swell of decking and other materials.

1605.2.1	EQ 16-3	Loads	(psf)					
DL	LL or SL	SL	LL	DL	Thermal Absorbers	Solar Panels	Sips	Factored Load (psf)
1.2	1.6	30	30	10	1.5	3	3.5	69.6

w/o sips thermal

51.6

		Front Roof	Back Roof	Intermed Roof	Little Roof
	Width	25.75	11.16	8	12
	Depth	12.83	10	7.67	7.6
	Area ft^2	330	112	61	91.2
Total Force (lbf)	live	15858	5357	1840.8	4377.6
	Dead	7136	2411	1104.5	1477.4
Length ft	Front Wall	24	11	N/A	7.6
	Back Wall	24	11	7.59	7.6
Load (plf)	Front Wall Live	330	243	N/A	288
	Front Wall Dead	149	110	N/A	97
	Back Wall Live	330	243	242.5	288
	Back Wall Dead	149	110	145.5	97
	Total per wall	479	353	388	385
Load (pli) (psf)	Front Wall Live	27.5	20.3		24.0
	Front Wall Dead	12.4	9.1		8.1
	Back Wall Live	27.5	20.3		24.0
	Back Wall Dead	12.4	9.1		8.1
	Total per wall	40	29		32
Load (psi)	Front Wall Live	5.5	4.1		4.8
	Front Wall Dead	2.5	1.8		1.6
	Back Wall Live	5.5	4.1		4.8
	Back Wall Dead	2.5	1.8		1.6
	Total per wall	8	6		6

Roof cantilever (2.5 f

0.129

0.0645

w/o solar panels

64.2

CU 255

1605.2.1	EQ 16-3	Loads	(psf)	
DL	LL,SL	LL	DL	TL
1.2	1.6	50	10	92

Living Room

Width (ft)	Length (ft)	Area (ft^2)
24	12	288

Load from Wall	36
Front Wall live (plf)	480
Front Wall Dead (plf)	108
Back Wall Live (plf)	480
Back Wall Dead (plf)	108
Total from Floor & Wall	
Front Load (plf)	588.00
Back Load (plf)	588.00
Distributed load from above	
Front Wall live (plf)	479.04
Front Wall Dead (plf)	479.04
Back Wall Live (plf)	
Back Wall Dead (plf)	
Total from Floor & Wall & Roof	
Front Load (plf)	1067.04
Back Load (plf)	1067.04
Jack Loads	
Corners (lbf)	6402.241
Center (lbf)	12804.48

Bedroom

Width (ft)	Length (ft)	Area (ft^2)
12	12	144

Front wall trib area	0
Back wall trib area	4
Load from Wall (plf)	36
Front Wall live (plf)	0
Front Wall Dead (plf)	0
Back Wall Live (plf)	320
Back Wall Dead (plf)	64
Total	
Front Load (plf)	36
Back Load (plf)	420
Distributed load from above	
Front Wall live (plf)	288
Front Wall Dead (plf)	97
Back Wall Live (plf)	288
Back Wall Dead (plf)	97
	3
Total from Floor & Wall & Roof	
Front Wall live (plf)	288
Front Wall Dead (plf)	97
Back Wall Live (plf)	608
Back Wall Dead (plf)	161

1605.2.1	EQ 16-3	Loads		(psf)		
DL	**LL or SL**	**SL**	**Self wt**	**LL Roof**	**DL**	**Factored Load**
1.2	1.6	0	9000	20	10	44
				LL Floor	**DL**	**Total Factored Load**
				50	10	92

area 320

Roof Header

Total Force (lbf)	14080	
	front wall	back wall
total force (live)	5120	5120
total force (dead)	1920	1920
plf (live)	128	128
plf (dead)	48	48
total load (plf)	176	176

Floor Beam

Total Force (lbf)	29440	
	front wall	back wall
total force (live)	12800	12800
total force (dead)	6420	6420
plf (live)	320	320
plf (dead)	160.5	160.5
total load (plf)	480.5	480.5

CU 257

CONSULTING ENGINEERS

☐ JVA, Incorporated
1319 Spruce Street
Boulder, CO 80302
Ph: 303.444.1951
Fax: 303.444.1957

☐ JVA, Incorporated
25 Old Town Square
Suite 200
Fort Collins, CO 80524
Ph: 970.225.9099
Fax: 970.225.6923

☐ JVA, Incorporated
P.O. Box 1860
79050 US Hwy 40
Winter Park, CO 80482
Ph: 970.722.7677
Fax: 970.722.7679

- Wind loads ASCE - 7 - 02

$I = 1.15$ $K_{zt} = 1.0$ (open)

3sec $V = 60$ mph exp. $C = .85$ $\leq 15'$

$q_z = .00256(K_{zt})(K_z)(K_d)(V^2)(I)$ psf

$= .00256(1.0)(.85)(.85)(60)^2(1.15) = 7.66$ psf

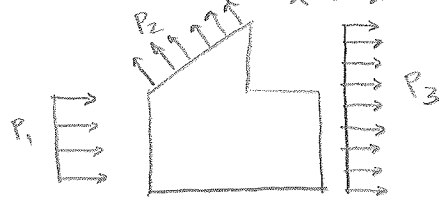

$\frac{L}{B} = \frac{32'}{40'} = < 1 \Rightarrow C_p = .8$ windward

$= -.5$ Leeward

wind from south

wall pressure - windward

$P_1 = q_z G C_{pi} = 8(psf)(.85)(.8) = 5.44$ psf

Wall pressure - Leeward

$P_3 = (q_h) G C_{pi} = (8psf)(.85)(-.5) = -3.4$ psf

Roof pressure - Ignore to be conservative

enclosed building

$G = .85$ - rigid building

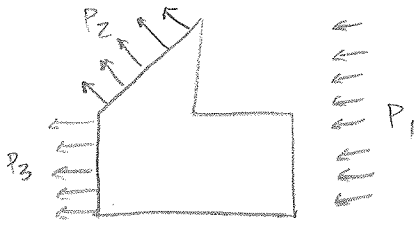

$\frac{L}{B} = \frac{32'}{40'} = < 1 = C_p = .8$ windward

$C_p = -.5$ leeward

$\frac{h}{L} = \frac{16'}{32'} = .5 \Rightarrow C_p = -.6$ Leeward roof $\angle 0°$

wind from North

$P_1 = q_z (G C_{pi})$

$= (8psf)(.85)(.8) = 5.44$ psf

$P_3 = q_H (G C_{pi})$

$= (8psf)(.85)(-.5) = -3.4$ psf

$P_2 = q_H (G C_{pi})$

$= (8psf)(.85)(-.6) = -4.08$ psf

$G = .85$ rigid

w/in S.I.P.S ability

CONSULTING ENGINEERS

☐ JVA, Incorporated
1319 Spruce Street
Boulder, CO 80302
Ph: 303.444.1951
Fax: 303.444.1957

☐ JVA, Incorporated
25 Old Town Square
Suite 200
Fort Collins, CO 80524
Ph: 970.225.9099
Fax: 970.225.6923

☐ JVA, Incorporated
P.O. Box 1860
79050 US Hwy 40
Winter Park, CO 80482
Ph: 970.722.7677
Fax: 970.722.7679

- Overturning Calculation - full built house

Plan View

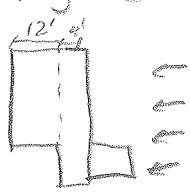

- critical is wind from the North

	L	H	Press	Force	moment arm	
$P_1 \rightarrow$	40' ×	16' ×	5.5 psf	= 3520 lb	@ 8'	= 28,160 lb-ft
① $P_3 \rightarrow$	40' ×	8' ×	3.4 psf	= 1088 lb	@ 4'	= 4,352 lb-ft
$P_2 \rightarrow$	40' ×	8' ×	4.08 psf	= 1280 lb	@ 12'	= 15,360
						47,872 lb-ft

assume just container resisting

restoring moment = (6000 lb) @ 16' = 96,000 lb-f > 47,872 lb-ft

will not flip over

- Overturning Calculation - construction phase - container alone

	L	H	Pressure			
windward	40' ×	8' ×	5.5 psf	= 1760 lb	@ 5'	= 8,800 lb-ft
Leeward +	40' ×	8' ×	3.4 psf	= 1088 lb	@ 5'	= 5440 lb-ft
						14,240 lb-ft

container weight
6000 lb @ 4' = 24,000 lb-f > 14,240 lb-ft

will not flip over

total shear

$\underbrace{3520 + 1088 + 1280}_{\text{from 1}}$ = 5888 lb shear total

our jacks can take this

JVA, Incorporated
1319 Spruce Street
Boulder, CO 80302
Ph: 303.444.1951
Fax: 303.444.1957

JVA, Incorporated
25 Old Town Square
Suite 200
Fort Collins, CO 80524
Ph: 970.225.9099
Fax: 970.225.6923

JVA, Incorporated
P.O. Box 1860
79050 US Hwy 40
Winter Park, CO 80482
Ph: 970.722.7677
Fax: 970.722.7679

- In location @ NREL

$I = 1.15$ $k_{zt} = 1.0$

3sec $V = 130$ mph $k_{zpos} = .85$

$q_z = .00256 (k_{zt})(k_z)(k_d) V^2 I$

$= .00256 (1.0)(.85)(.85)(130)^2 (1.15) = 35.95$ psf

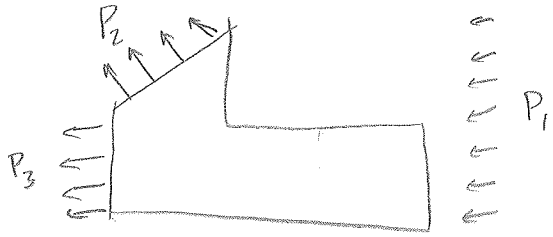

$q_z = q_h$ @ $\leq 15'$ - close enough

$\frac{L}{B} = \frac{32}{40} \Rightarrow < 1$ $C_p = .8$ windward

$C_p = -.5$ leeward

$\frac{h}{L} = \frac{16'}{32'} = .5 \Rightarrow C_p = -.6$ leeward roof

Wall pressure - Windward

$G = .85$ rigid building

$P_1 = q_z G C_{pi}$

$= (35.95 \text{ psf})(.85)(.8) = 24.5$ psf

$P_3 = q_h G C_{pi}$

$= (35.95)(.85)(-.5) = -15.5$ psf

$P_2 = q_h G C_{pi}$

$= (35.95)(.85)(-.6) = -18.5$ psf

within capacity of SIPS.

No overturning in NREL location because able to have tie downs.

CONSULTING STRUCTURAL ENGINEERS

Project: 2007 Solar Decathlon | Date: 06/28/07 | Job No.: 12741

Client: U of C | By: KCR | Sheet of

ASCE 7-02 Wind Calculation Sheet

Type of Structure	Building				
Enclosure Classification	Enclosed				
ASCE Structure Category	II - Typical Occupancy				
	Normal to Ridge	Parallel to Ridge			
Building Dimensions	8 ft	x	40 ft		
Mean Roof Elevation	10 ft	Eave Elevation	10 ft	Parapet Elevation	ft
Exposure Category	C				
Basic Wind Speed	110 mph	3 second gust		Type of Hill	No hill
Hurricane Prone Region?	No			H 1 ft	L_h 1 ft
Site Elevation	5,280 ft	Altitude Adjustment	0.86	x 1 ft	L_b no input
Roof Slope	0 :12	θ = 0.0 °			
Diaphragm continuous?	Yes			Internal Pressure Coefficient	GC_{pi} = ± 0.18
ASCE Importance Factor	I_w= 1.00				

Main Wind Resistance Wind Pressures (psf)

Note: Min. Proj. Area Design Pressure (Windward + Leeward) allowed by code = 10psf

Height (ft)	0-15	15-20	20-25	25-30	30-40	40-50	50-60	60-70	70-80	80-90	90-100
Windward Wall	**13.1**	**13.9**	**14.6**	**15.1**	**16.1**	**16.8**	**17.5**	**18.1**	**18.6**	**19.1**	**19.5**
Leeward Wall	**-8.2** wind normal to ridge				**-3.3** wind parallel to ridge						
Side Wall	**-11.4**										
Leeward Roof	**-11.4** wind normal to ridge										
Parapet	**34.6** Windward				**-21.2** Leeward						

Distance from Windward Edge (ft)		0 to 5		5 to 10		10 to 20		20 +	
Windward Roof (for all h)	Normal to Ridge	**-21.2**	**+0.0**	**-11.4**	**+0.0**	**-11.4**	**+0.0**	**-11.4**	**+0.0**
	Parallel to Ridge	**-14.7**		**-14.7**		**-8.2**		**-4.9**	

Components & Cladding

Type of Roof	Hip Roof? No		
Gable, Hip or Flat (¼:12)	**Roof**	**Wall**	**Parapet**
Component	"Typical Truss"	"Typical Stud"	
Effective Wind Area (ft^2)	28 x 9.33	10 x 3.33	0 x 0.00
Roof Overhang Dimensions	0 ft	Rafter Spacing 2 ft	Elev. 0 ft

Components & Cladding Wind Pressures (psf) Note: Minimum Design Pressure allowed by code = 10psf

Walls												
Height (ft)	**Zone**	0-15	15-20	20-25	25-30	30-40	40-50	50-60	60-70	70-80	80-90	90-100
Windward	**4& 5**	**19.2**	**20.4**	**21.3**	**22.2**	**23.6**	**24.7**	**25.7**	**26.5**	**27.3**	**28.0**	**28.6**
Parapet	**2**	**51.9**										
	3	**71.2**										
Leeward/Side	**4**	**-21.1** internally										
	5	**-24.5** within 3.0 ft of corner										

Roof						
Roof Zone on Sketches	3	**7.3**	within	3.0	x	3.0 sq ft of corner
	3	**-24.6**	within	3.0	x	3.0 sq ft of corner
	2	**7.3**	within	3.0	ft of edge	
	2	**-24.6**	within	3.0	ft of edge	
	1	**7.3**	internally			
	1	**-20.8**	internally			
	Overhang	**-57.3**	within	0.0	x	0.0 sq ft of corner
	Overhang	**-36.2**	internally			

If a parapet >= 3 ft is provided around the perimeter of the roof, Zone 3 shall be treated as Zone 2.

CONSULTING ENGINEERS

☐ JVA, Incorporated
1319 Spruce Street
Boulder, CO 80302
Ph: 303.444.1951
Fax: 303.444.1957

☐ JVA, Incorporated
25 Old Town Square
Suite 200
Fort Collins, CO 80524
Ph: 970.225.9099
Fax: 970.225.6923

☐ JVA, Incorporated
P.O. Box 1860
79050 US Hwy 40
Winter Park, CO 80482
Ph: 970.722.7677
Fax: 970.722.7679

Date: _____ Page: ___ of ___
By: MCR Chkd. By: ___
Job No: _____
Project: Solar D in Col
Client: _____
☐ Preliminary ☐ Final

- Over turning of SC during Construction

wind ward 40' x 8' x 13.1 psf = 5856 lbs

lee ward 40' x 8' x 11.4 psf = 3648 lbs

1/2 of height

4' + 3' ← distance above ground

Overt. Moment (4192 lbs)(7') x (3648 lbs)(7')
= 54880 lb ft

Resisting Moment
Container Weight = 9,000 lbs

(.6) 9,000 lbs (4') = 21600 lb ft

$$\frac{54880 \text{ lb ft} - 21600 \text{ lb ft}}{1000 \text{ lb/k}} = 33.28 \text{ k ft}$$

CONSULTING ENGINEERS

☐ JVA, Incorporated
1319 Spruce Street
Boulder, CO 80302
Ph: 303.444.1951
Fax: 303.444.1957

☐ JVA, Incorporated
25 Old Town Square
Suite 200
Fort Collins, CO 80524
Ph: 970.225.9099
Fax: 970.225.6923

☐ JVA, Incorporated
P.O. Box 1860
79050 US Hwy 40
Winter Park, CO 80482
Ph: 970.722.7677
Fax: 970.722.7679

Date: 6-28-07 Page: 1 of 1 CU
By: KCR Chkd. By: 263
Job No: 12741
Project: Solar Decathlon
Client: U of Colorado
☐ Preliminary ☐ Final

Total Uplift = 34 k ft

2 Piers per side = 18 k ft / pile

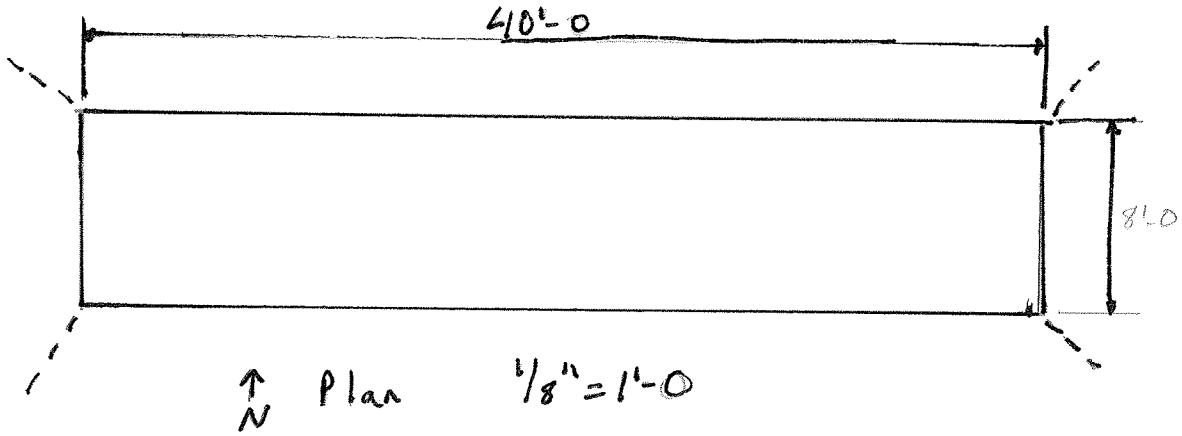

Site Location:

4217 West 116th Way
Lot 42
Westminster Colorado

CONSULTING ENGINEERS

☐ JVA, Incorporated
1319 Spruce Street
Boulder, CO 80302
Ph: 303.444.1951
Fax: 303.444.1957

☐ JVA, Incorporated
25 Old Town Square
Suite 200
Fort Collins, CO 80524
Ph: 970.225.9099
Fax: 970.225.6923

☐ JVA, Incorporated
P.O. Box 1860
79050 US Hwy 40
Winter Park, CO 80482
Ph: 970.722.7677
Fax: 970.722.7679

Date: _____ Page: ___ of ___
By: _____ Chkd. By: ___
Job No: _____
Project: _____
Client: _____
☐ Preliminary ☐ Final

- Jack Bolt strengths

3/4" Nominal Diameter $A_g = .442$ in

.652" Core Diameter $A_n = .334$ in

- Polar moment of Inertia

$$I_p = \frac{\pi d^4}{64} = \frac{\pi (.652)^4}{64} = .00887 \text{ in}^4$$

- Euler Buckling

$$P = \frac{k \pi^2 E I}{\ell^2}$$

$k = 1$ pin-pin
$E = 29000$ ksis steel A325
$I = .00887$ in^4
$\ell = 6$ in unbraced length

$P = 70.52$ kips

max Jack load 11 kips

$$\boxed{11^{\text{kips}} < 70.52^{\text{kips}} \quad \checkmark \text{ok}}$$

CONSULTING ENGINEERS

☐ JVA, Incorporated
1319 Spruce Street
Boulder, CO 80302
Ph: 303.444.1951
Fax: 303.444.1957

☐ JVA, Incorporated
25 Old Town Square
Suite 200
Fort Collins, CO 80524
Ph: 970.225.9099
Fax: 970.225.6923

☐ JVA, Incorporated
P.O. Box 1860
79050 US Hwy 40
Winter Park, CO 80482
Ph: 970.722.7677
Fax: 970.722.7679

Date: 12/19 Page: ___ of ___
By: ___ Chkd. By: ___
Job No: ___
Project: ___
Client: ___
☐ Preliminary ☐ Final

- Shear strength of plate

circumference of bolt $= C = \pi d = \pi 1\tfrac{3}{8}'' = 4.32''$
thickness of plate $= t = \tfrac{1}{4}''$

Area of plate in shear $= (\tfrac{1}{4}'')(4.32'') = 1.08\ in^2$

strengh of steel in shear W30×108 $A = 31.7\ in^2$ $V_n = 488^k$

$\frac{488^k}{31.7\ in^2} = 15.39\ ksi$

W27×84 $A = 24.8\ in^2$ $V_n = 369^k$

$\frac{369^k}{24.8\ in^2} = 14.87\ ksi$

W8×10 $A = 2.96\ in^2$ $V_n = 40.2^k$

$\frac{40.2^k}{2.96\ in^2} = 13.58\ ksi$

worst case
Means our plate has $= 1.08''^2 \cdot 13.58\ ksi$
$= 14.67$ kips

Foundation Schedule Reactions from RISA 3-D

					Allowable	1.5	ksf		
				Theoretical		Actual		k"	
Location	Designation	X-Dist.	Load	Length(ft)	Width (ft)	Length (ft)	Width (ft)	Moment	needed Sx
Cont. Back Wall	N1	0	2.209	1.214	1.214	1.5	1.5	5.0	0.25
Cont. Back Wall	N3	9	6.689	2.112	2.112	2	2	20.1	1.00
Cont. Back Wall	N4	20	6.356	2.058	2.058	2	2	19.1	0.95
Cont. Back Wall	N5	25.92	6.514	2.084	2.084	2	2	19.5	0.98
Cont. Back Wall	N6	31.92	7.188	2.189	2.189	2.5	2.5	27.0	1.35
Cont. Back Wall	N7	39.5	2.463	1.281	1.281	1.5	1.5	5.5	0.28
Cont. Front Wall	N8	0	0.495	0.574	0.574	1.5	1.5	1.1	0.06
Cont. Front Wall	N3A	4	9.29	2.489	2.489	2.5	2.5	34.8	1.74
Cont. Front Wall	N10	12	10.726	2.674	2.674	2.5	2.5	40.2	2.01
Cont. Front Wall	N11	16	7.803	2.281	2.281	2.5	2.5	29.3	1.46
Cont. Front Wall	N12	23	10.609	2.659	2.659	2.5	2.5	39.8	1.99
Cont. Front Wall	N13	28	5.411	1.899	1.899	2	2	16.2	0.81
Cont. Front Wall	N28	35	5.243	1.870	1.870	2	2	15.7	0.79
Cont. Front Wall	N14	39.5	1.273	0.921	0.921	1.5	1.5	2.9	0.14
Living Rm. Frnt Wall	Corner	3	3.5	1.528	1.528	2	2	10.5	0.53
Living Rm. Frnt Wall	Middle	11.33	8	2.309	2.309	2.5	2.5	30.0	1.50
Living Rm. Frnt Wall	Middle	19	8	2.309	2.309	2.5	2.5	30.0	1.50
Living Rm. Frnt Wall	Corner	27	3.5	1.528	1.528	2	2	10.5	0.53
Bed Rm. Back Wall	Corner	26	3.512	1.530	1.530	1.5	1.5	7.9	0.40
Bed Rm. Back Wall	Middle	26/38	3.808	1.593	1.593	1.5	1.5	8.6	0.43
Bed Rm. Back Wall	Corner	38	3.512	1.530	1.530	1.5	1.5	7.9	0.40
Garage	North	0	2.247	1.224	1.224	1.5	1.5	5.1	0.25
Garage	Middle	10	9.146	2.469	2.469	2.5	2.5	34.3	1.71
Garage	South	20	1.799	1.095	1.095	1.5	1.5	4.0	0.20

82269 lbs

	Moment	needed Sx
max 1.5	10.5	0.53
max 2.0	30.0	1.50
max 2.5	40.2	2.01

Plate Designation P	1.5	2	2.5
Number Needed	12	13	9

Strength of base				
	0.375			
	2	ft square		
load	1.5	ksf		
load	0.0104	ksi		
tributary width	24	in		
distributed load	0.25	kips/inch		
distributed load	3	kips/foot		
moment	3	kip*ft	thickness	0.625
	36	kip in	depth	2.75
max stress	20	ksi		
			Centroid	2.91
needed Sx	1.8	in^3	Mom Iner	5.50
			Sbott	1.89
			Stop	25.26

Strength of base			bottom plate reinforcing			Total System	
plate thickness	0.25		thickness	0.375		135	cubic inches
plate size	1.5	ft square	depth	4		38	lbs
moment	10.5	kip in					
max stress	20	ksi	Centroid	4.09			
needed Sx	0.53	in^3	Mom Iner	8.74			
			Sbott	2.13	**OK**		
			Stop	55.93			

Strength of base			bottom plate reinforcing			Total System	
plate thickness	0.25		thickness	0.375		216	cubic inches
plate size	2	ft square	depth	4		61	lbs
moment	30.0	kip in					
max stress	20	ksi	Centroid	4.10			
needed Sx	1.50	in^3	Mom Iner	8.80			
			Sbott	2.15	**OK**		
			Stop	58.64			

Strength of base			bottom plate reinforcing			Total System	
plate thickness	0.25		thickness	0.375		315	cubic inches
plate size	2.5	ft square	depth	4		89	lbs
moment	40.2	kip in					
max stress	20	ksi	Centroid	4.10			
needed Sx	2.01	in^3	Mom Iner	8.84			
			Sbott	2.15	**OK**		
			Stop	60.59			

CONSULTING ENGINEERS

☐ JVA, Incorporated
1319 Spruce Street
Boulder, CO 80302
Ph: 303.444.1951
Fax: 303.444.1957

☐ JVA, Incorporated
25 Old Town Square
Suite 200
Fort Collins, CO 80524
Ph: 970.225.9099
Fax: 970.225.6923

☐ JVA, Incorporated
P.O. Box 1860
79050 US Hwy 40
Winter Park, CO 80482
Ph: 970.722.7677
Fax: 970.722.7679

Date: _____ Page: ___ of ___
By: _____ Chkd. By: _____
Job No: _____
Project: _____
Client: _____
☐ Preliminary ☐ Final

- Bedroom Columns

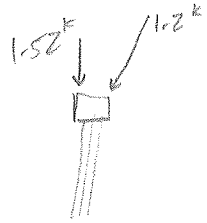

total = 1.2k + 1.52k = 2.72k

Strength of 2x6

$F'_c = F_c C_m C_t C_F C_i C_p$

$C_m = 1$ Not moist enviro
$C_t = 1$ No extreme temp
$C_F = 1.1$
$C_i = 1$ Non incizing
$C_p = 1$ lateral bracing

Hem-Fir #2 $F'_c = 1300(1.1) = 1430$ psi

Area 2-2x6's $= 2(1.5)(5.5) = 16.5 \text{ in}^2$

strength $= (1430 \text{ psi})(16.5 \text{ in}^2) = \boxed{23.5 \text{ kips} > 2.72 \text{ kips} \checkmark \text{ok}}$

JVA, Incorporated
1319 Spruce Street
Boulder, CO 80302
Ph: 303.444.1951
Fax: 303.444.1957

JVA, Incorporated
25 Old Town Square
Suite 200
Fort Collins, CO 80524
Ph: 970.225.9099
Fax: 970.225.6923

JVA, Incorporated
P.O. Box 1860
79050 US Hwy 40
Winter Park, CO 80482
Ph: 970.722.7677
Fax: 970.722.7679

$M_y < S_x F_y$
Bending

Fy of Foam = 37 psi
Fy of LSL = 1400 psi (min)
Fy of OSB (7/16" Exp 1) = 2,300 lb/ft (min) of panel

5.25 □" = 9200 lbs

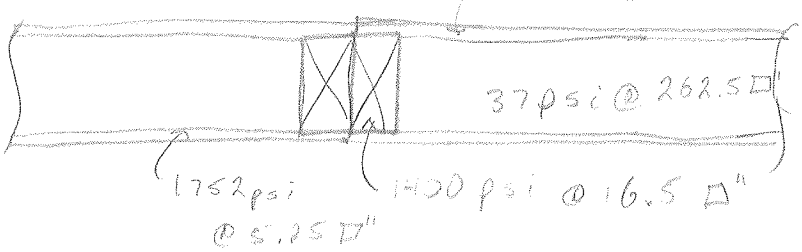

$\frac{1400}{1752} = .799$ 16.5 x .799 = 13.18 □"

$\frac{37}{1752} = .02$ 262.5 x .02 = 5.54 □"

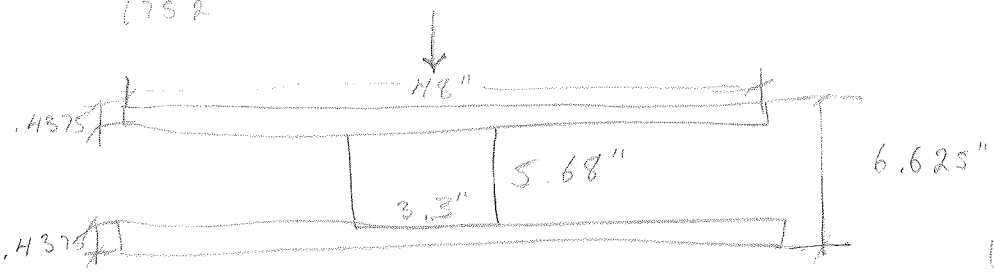

Using Fy = 1752 psi

DL = 50 psf LL = 10 psf

TL = 60 psf (4' Trib) = 240 plf

$M = \frac{240 \text{ plf} (12')^2}{8} = 4320 \text{ lb ft} = 51840 \text{ lb in}$

$S_x = \frac{bd^2}{3} + \frac{b(d^3 - d_i^3)}{6d} = \frac{(3.3)(5.68)^2}{3} + \frac{(48)(6.625^3 - 5.75^3)}{6(6.625)}$

$= 35.48 + 121.55 \text{ in}^3 = 157.03 \text{ in}^3$

$51840 \text{ lb in} < (157 \text{ in}^3)(1752 \text{ psi}) = 275{,}064 \text{ lb in}$

CONSULTING ENGINEERS

☐ JVA, Incorporated
1319 Spruce Street
Boulder, CO 80302
Ph: 303.444.1951
Fax: 303.444.1957

☐ JVA, Incorporated
25 Old Town Square
Suite 200
Fort Collins, CO 80524
Ph: 970.225.9099
Fax: 970.225.6923

☐ JVA, Incorporated
P.O. Box 1860
79050 US Hwy 40
Winter Park, CO 80482
Ph: 970.722.7677
Fax: 970.722.7679

Date: 7-15-07 Page: 2 of 2
By: KCR Chkd. By: CU 270
Job No: 12741
Project: Solar D
Client: U of C

☐ Preliminary ☐ Final

$$\Delta_{calc} = \frac{5\, w_{LL} L^4}{384\, EI}$$

$$I = \frac{bd^3}{3} + \frac{b(d^3 - d^3)}{12} = \frac{(3.3)(5.68)^3}{3} + \frac{48(6.625^3 - 5.75^3)}{12}$$

$$= 201.5\,in^4 + 402.6\,in^4 = 604\,in^4 \qquad E = 1.2 \times 10^6\,psi$$

$$= \frac{5\,(240\,plf/12\,in)(144\,in)^4}{384\,(1.2 \times 10^6\,psi)(604\,in^4)} = .22\,in$$

$$L/360 = 0.4\,in > .22\,in$$

CONSULTING ENGINEERS

☐ JVA, Incorporated
1319 Spruce Street
Boulder, CO 80302
Ph: 303.444.1951
Fax: 303.444.1957

☐ JVA, Incorporated
25 Old Town Square
Suite 200
Fort Collins, CO 80524
Ph: 970.225.9099
Fax: 970.225.6923

☐ JVA, Incorporated
P.O. Box 1860
79050 US Hwy 40
Winter Park, CO 80482
Ph: 970.722.7677
Fax: 970.722.7679

Ledger Bolt Check

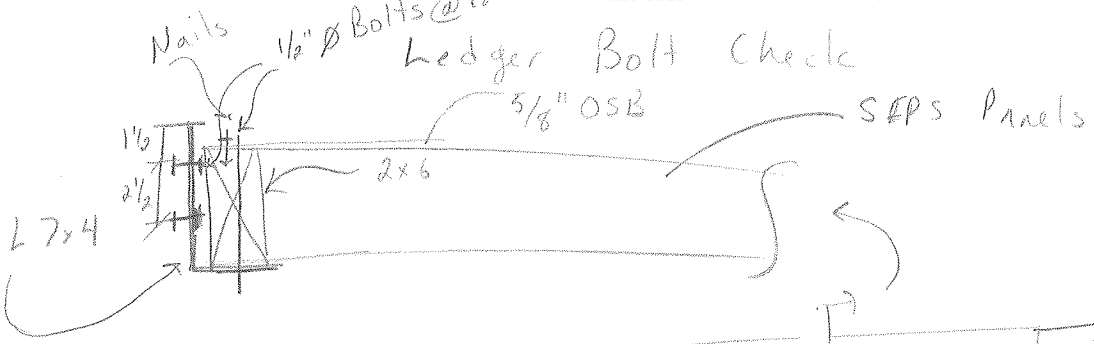

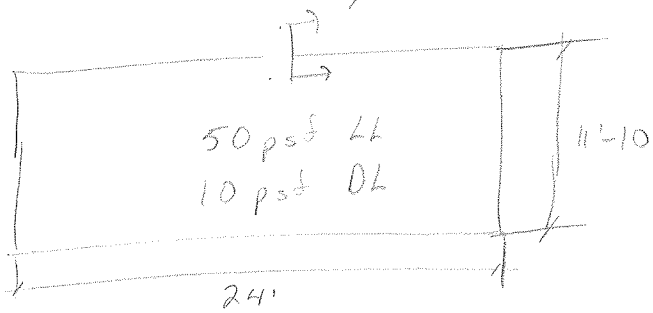

Trib width = 5'-11" ≈ 6'-0" = 72"

Factor load LL = 50 × 1.6 = 80 psf
DL = 10 × 1.2 = 12 psf
92 psf

92 psf (12") = 92 plf

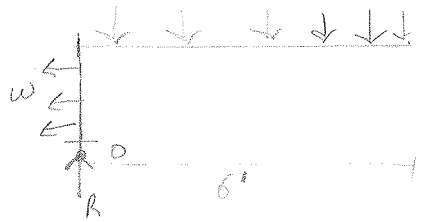

$\Sigma F_x = 0$ 92 plf (6') + R = 0 R = 552 lbs/ft
= 46 lbs/in of L

$\circlearrowleft + \Sigma M_O = 0$ −92 plf (6')(3') + .5'(.25')(−w) = 0
w = 1104 psi of 2x6 or OSB

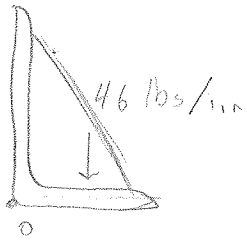

Tensile Strength = 58 ksi = F_u

$$46 \text{ lbs/in}(12")(2") = \frac{552 \text{ lbs}}{(12\text{in})(d^2)/6} = 36 \text{ ksi}$$

$d^2 = .015$
$d = .123$ in ≈ 3/8"
Angle is 3/8" x 7 x 4

CONSULTING ENGINEERS

☐ JVA, Incorporated
1319 Spruce Street
Boulder, CO 80302
Ph: 303.444.1951
Fax: 303.444.1957

☐ JVA, Incorporated
25 Old Town Square
Suite 200
Fort Collins, CO 80524
Ph: 970.225.9099
Fax: 970.225.6923

☐ JVA, Incorporated
P.O. Box 1860
79050 US Hwy 40
Winter Park, CO 80482
Ph: 970.722.7677
Fax: 970.722.7679

CU 272

A325 Bolts

1/2" Φ

$F_{yy} = 81$ ksi
$F_t = 105$ ksi
F_n (tension) = 90 ksi
F_n (shear) = 48 ksi

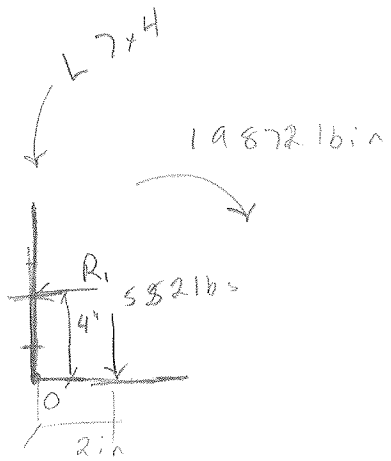

$\Phi_v = 0.75$
1 bolt @ 24" $(49 \text{ lb in})(24") = 552 \text{ lbs}$
Shear per bolt = 552 lbs = r_u

$R_n = F_n A_b$
$\Phi R_n = 0.75 (48 \text{ ksi})(.1963 \text{ in}^2)$
$= 7$ kips
$\Phi R_n > r_u$

Shear Okay

$\Sigma M_o = 0 \Rightarrow -552 \text{ lbs}(2 \text{ in}) + R_2 (4") = 0$
$R_2 = 276$ lbs $= r_{u_T}$

Available Tensile 1/2" Φ bolt
$R_n = F_n A_b$
$\Phi R_n = 0.75 (90 \text{ kips})(.1963 \text{ in}^2)$
$= 13.2$ kips
$\Phi R_n > r_{u_T}$

Tension Okay

CONSULTING ENGINEERS

☐ JVA, Incorporated
1319 Spruce Street
Boulder, CO 80302
Ph: 303.444.1951
Fax: 303.444.1957

☐ JVA, Incorporated
25 Old Town Square
Suite 200
Fort Collins, CO 80524
Ph: 970.225.9099
Fax: 970.225.6923

☐ JVA, Incorporated
P.O. Box 1860
79050 US Hwy 40
Winter Park, CO 80482
Ph: 970.722.7677
Fax: 970.722.7679

Beam Splice Info 4 Ply members

South Living Floor Beam M = 2.55 k ft

$\frac{2.55 \text{ k ft}}{5.5''} = 5.6 \text{ k}$

5.1 k / 3 planes = 1.9 k = Max Tension Force

2x6 DFL #2 or better

$F_t = 575$ psi $F_t' = F_t C_D C_F$ $C_D = 1.0$ $C_F = 1.5$

$F_t' = 575 (1.0)(1.5) = 862.5$ psi

$A_{net} = 1.5(5.5 - 1/4 - 1/16) = 7.78 \text{ in}^2$

$f_t = \frac{1.9 \text{ k}}{7.78 \text{ in}^2} = 244 \text{ psi} < 862.5 \text{ psi}$ Wood Okay

Use 1/4x6 (SDS25600) SDS
Staggered @ 24" both sides Z = 260 lbs

For both North Bedroom Beam
+ South Living room Beam

For 24 ft Member Capacity = 3.1 k > 1.9 k
For 12 ft Member Capacity = 1.55 k > 0.09 k

All 2x6 Beams use
3-Ply Clear story Beam + South Living Header
M = 1.1 k ft $\frac{1.1}{5.5} = 2.4 \text{ k}$ $\frac{2.4 \text{ k}}{2} = 1.2 \text{ k}$ Max Tension

Use 10d Common Nails staggered @ 12" ea side
Z = 102 lbs
For 2 2 ft Member Capacity = 2.2 k > 1.2 k

CONSULTING ENGINEERS

☐ JVA, Incorporated
1319 Spruce Street
Boulder, CO 80302
Ph: 303.444.1951
Fax: 303.444.1957

☐ JVA, Incorporated
25 Old Town Square
Suite 200
Fort Collins, CO 80524
Ph: 970.225.9099
Fax: 970.225.6923

☐ JVA, Incorporated
P.O. Box 1860
79050 US Hwy 40
Winter Park, CO 80482
Ph: 970.722.7677
Fax: 970.722.7679

CU 274

Beam Splice Info

Header over window in Attic / Bedroom Space
3-Ply 1 3/4 x 5 1/2 LVL

$M = 3.6$ k ft $\qquad \frac{3.6 \text{ kft}}{5.5''} = 7.85$ k

$\frac{7.85 \text{ k}}{2 \text{ planes}} = 3.93$ k = Max Tension Force

$A_{net} = 1.75(5.5 - 1/4 - 1/16) = 9.59 \text{ in}^2$

$f_t = \frac{3.93 \text{ k}}{9.59 \text{ in}^2} = 409.8$ psi

F_t for Glulam's is always > 675 psi
Wood Okay

Use 2-10d Common Nails staggered @ 6" ea side $\qquad Z = 102$ lbs
For 12 ft member Capacity = 4.8 k > 3.93 k

Floor Splice Splice Info

$M_{max} = 2.28$ k ft / 5.5" = 5.0 k

Use 2-10d Common Nails staggered @ 6"
$Z = 102$ lbs
For 12 ft Member Capacity = 5.6 k > 5.0 k

TJ-Beam® 6.25 Serial Number: 7005130721
User: 2 5/15/2007 6:00:24 PM
Page 1 Engine Version: 6.25.71

Headers in Livingroom

3 Pcs of 1 1/2" x 5 1/2" 1.6E Solid Sawn Douglas Fir #2

THIS PRODUCT MEETS OR EXCEEDS THE SET DESIGN CONTROLS FOR THE APPLICATION AND LOADS LISTED

Member Slope: 0/12 Roof Slope0/12

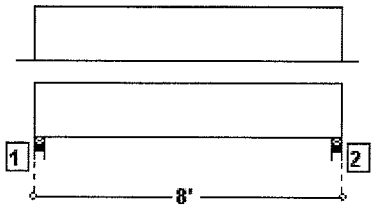

All dimensions are horizontal.

Product Diagram is Conceptual.

LOADS:

Analysis is for a Header (Flush Beam) Member. Tributary Load Width: 6'
Primary Load Group - Roof (psf): 30.0 Live at 125 % duration, 17.5 Dead

SUPPORTS:

		Input Width	Bearing Length	Vertical Reactions (lbs) Live/Dead/Uplift/Total	Detail	Other
1	Stud wall	3.50"	1.50"	720 / 444 / 0 / 1164	By Others	None
2	Stud wall	3.50"	1.50"	720 / 444 / 0 / 1164	By Others	None

-See TJ SPECIFIER'S / BUILDERS GUIDE for detail(s): By Others

DESIGN CONTROLS:

	Maximum	Design	Control	Control	Location
Shear (lbs)	1115	-945	1959	Passed (48%)	Rt. end Span 1 under Roof loading
Moment (Ft-Lbs)	2137	2137	3090	Passed (69%)	MID Span 1 under Roof loading
Live Load Defl (in)		0.140	0.256	Passed (L/656)	MID Span 1 under Roof loading
Total Load Defl (in)		0.227	0.313	Passed (L/406)	MID Span 1 under Roof loading

-Deflection Criteria: STANDARD(LL:L/360,TL:L/240). Additional checks follow.
-TL:0.313"
-Allowable moment was increased for repetitive member usage.
-Bracing(Lu): All compression edges (top and bottom) must be braced at 8' o/c unless detailed otherwise. Proper attachment and positioning of lateral bracing is required to achieve member stability.
-The allowable shear stress (Fv) has not been increased due to the potential of splits, checks and shakes. See NDS for applicability of increase.
-Analysis based on vertical loads only and assumes structural supports as noted in the input. Axial loads are not considered in this analysis.
-Analysis assumes continuous member. Lap joints, splices and finger joints significantly reduce member performance and have not been considered.
-Design assumes adequate continuous lateral support of the compression edge.

ADDITIONAL NOTES:

-IMPORTANT! The analysis presented is output from software developed by Trus Joist (TJ). TJ warrants the sizing of its products by this software will be accomplished in accordance with TJ product design criteria and code accepted design values. The specific product application, input design loads, and stated dimensions have been provided by the software user. This output has not been reviewed by a TJ Associate.
-Not all products are readily available. Check with your supplier or TJ technical representative for product availability.
-THIS ANALYSIS FOR iLevel PRODUCTS ONLY! PRODUCT SUBSTITUTION VOIDS THIS ANALYSIS. Solid sawn lumber analysis is in accordance with 2001 NDS methodology.
-Allowable Stress Design methodology was used for Building Code IBC analyzing the solid sawn lumber material listed above.
-Note: See TJ SPECIFIER'S / BUILDER'S GUIDES for multiple ply connection.

PROJECT INFORMATION:

OPERATOR INFORMATION:

Kari Rogne
JVA
1319 Spruce Street
Boulder, CO 80305
Phone : (303)444-1951
KRogne@jvajva.com

Z:\Solar Decath KCR\CALCULATIONS\TJ beam Calcs\Living South Louver Window Header.sms

Trus Joist A Weyerhaeuser Business

TJ-Beam® 6.25 Serial Number: 7005130721
User: 2 5/15/2007 6:00:24 PM
Page 2 Engine Version: 6.25.71

Headers in Livingroom

3 Pcs of 1 1/2" x 5 1/2" 1.6E Solid Sawn Douglas Fir #2

THIS PRODUCT MEETS OR EXCEEDS THE SET DESIGN CONTROLS FOR THE APPLICATION AND LOADS LISTED

Load Group: Primary Load Group

	^	7' 8.00"	^
Max. Vertical Reaction Total (lbs)	1164		1164
Max. Vertical Reaction Live (lbs)	720		720
Required Bearing Length in	1.50(W)		1.50(W)
Max. Unbraced Length (in)		96	

Loading on all spans, LDF = 0.90 , 1.0 Dead

Shear at Support (lbs)		360	-360
Max Shear at Support (lbs)		425	-425
Member Reaction (lbs)	425		425
Support Reaction (lbs)	444		444
Moment (Ft-Lbs)		815	

Loading on all spans, LDF = 1.25 , 1.0 Dead + 1.0 Floor + 1.0 Roof

Shear at Support (lbs)		945	-945
Max Shear at Support (lbs)		1115	-1115
Member Reaction (lbs)	1115		1115
Support Reaction (lbs)	1164		1164
Moment (Ft-Lbs)		2137	
Live Deflection (in)		0.140	
Total Deflection (in)		0.227	

PROJECT INFORMATION:

OPERATOR INFORMATION:

Kari Rogne
JVA
1319 Spruce Street
Boulder, CO 80305
Phone : (303)444-1951
KRogne@jvajva.com

Z:\Solar Decath KCR\CALCULATIONS\TJ beam Calcs\Living South Louver Window Header.sms

TJ-Beam® 6.25 Serial Number: 7005130721
User: 2 5/15/2007 6:18:36 PM
Page 1 Engine Version: 6.25.71

Livingroom Clerestory Header w/ 3 Support

3 Pcs of 1 1/2" x 5 1/2" 1.3E Solid Sawn Hem-Fir #2

THIS PRODUCT MEETS OR EXCEEDS THE SET DESIGN CONTROLS FOR THE APPLICATION AND LOADS LISTED

Member Slope: 0/12 Roof Slope5/12

Overall Dimension: 24'

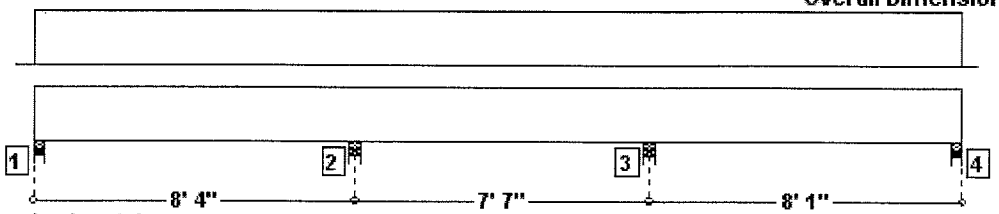

All dimensions are horizontal.

Product Diagram is Conceptual.

LOADS:

Analysis is for a Drop Beam Member. Tributary Load Width: 6'
Primary Load Group - Roof (psf): 20.0 Live at 125 % duration, 15.0 Dead

SUPPORTS:

		Input Width	Bearing Length	Vertical Reactions (lbs) Live/Dead/Uplift/Total	Detail	Other
1	Stud wall	3.50"	1.50"	437 / 356 / 0 / 793	By Others	None
2	Stud wall	3.50"	1.50"	1094 / 893 / 0 / 1987	By Others	None
3	Stud wall	3.50"	1.50"	1068 / 867 / 0 / 1936	By Others	None
4	Stud wall	3.50"	1.50"	426 / 346 / 0 / 772	By Others	None

-See TJ SPECIFIER'S / BUILDERS GUIDE for detail(s): By Others

DESIGN CONTROLS:

	Maximum	Design	Control	Control	Location
Shear (lbs)	-1090	-955	3094	Passed (31%)	Rt. end Span 1 under Roof ADJACENT span loading
Moment (Ft-Lbs)	-1475	-1475	3003	Passed (49%)	Bearing 2 under Roof ADJACENT span loading
Live Load Defl (in)		0.096	0.408	Passed (L/999+)	MID Span 1 under Roof ALTERNATE span loading
Total Load Defl (in)		0.166	0.544	Passed (L/592)	MID Span 1 under Roof ALTERNATE span loading

-Deflection Criteria: STANDARD(LL:L/240,TL:L/180).
-Allowable moment was increased for repetitive member usage.
-Bracing(Lu): All compression edges (top and bottom) must be braced at 24' o/c unless detailed otherwise. Proper attachment and positioning of lateral bracing is required to achieve member stability.
-The allowable shear stress (Fv) has not been increased due to the potential of splits, checks and shakes. See NDS for applicability of increase.
-Analysis based on vertical loads only and assumes structural supports as noted in the input. Axial loads are not considered in this analysis.
-Analysis assumes continuous member. Lap joints, splices and finger joints significantly reduce member performance and have not been considered.
-The load conditions considered in this design analysis include alternate and adjacent member pattern loading.
-Design assumes adequate continuous lateral support of the compression edge.

ADDITIONAL NOTES:

-IMPORTANT! The analysis presented is output from software developed by Trus Joist (TJ). TJ warrants the sizing of its products by this software will be accomplished in accordance with TJ product design criteria and code accepted design values. The specific product application, input design loads, and stated dimensions have been provided by the software user. This output has not been reviewed by a TJ Associate.
-Not all products are readily available. Check with your supplier or TJ technical representative for product availability.
-THIS ANALYSIS FOR iLevel PRODUCTS ONLY! PRODUCT SUBSTITUTION VOIDS THIS ANALYSIS. Solid sawn lumber analysis is in accordance with 2001 NDS methodology.
-Allowable Stress Design methodology was used for Building Code IBC analyzing the solid sawn lumber material listed above.
-Note: See TJ SPECIFIER'S / BUILDER'S GUIDES for multiple ply connection.

PROJECT INFORMATION:

Solar Decathlon
JVA Consulting Engineers, Inc.

OPERATOR INFORMATION:

Kari Rogne
JVA
1319 Spruce Street
Boulder, CO 80305
Phone : (303)444-1951
KRogne@jvajva.com

Z:\Solar Decath KCR\CALCULATIONS\TJ beam Calcs\Clerestory beam.sms

TJ-Beam® 6.25 Serial Number: 7005130721
User: 2 5/15/2007 6:18:36 PM
Page 2 Engine Version: 6.25.71

Livingroom Clerestory Header w/ 3 Support

3 Pcs of 1 1/2" x 5 1/2" 1.3E Solid Sawn Hem-Fir #2

THIS PRODUCT MEETS OR EXCEEDS THE SET DESIGN CONTROLS FOR THE APPLICATION AND LOADS LISTED

Load Group: Primary Load Group

	^ 8' 2.00"	^ 7' 7.00"	^ 7' 11.00" ^
Max. Vertical Reaction Total (lbs)	793	1987	1936 772
Max. Vertical Reaction Live (lbs)	437	1094	1068 426
Required Bearing Length in	1.50(W)	1.50(W)	1.50(W) 1.50(W)
Max. Unbraced Length (in)	288	288 288	288 288

Loading on all spans, LDF = 0.90 , 1.0 Dead

Shear at Support (lbs)	279	-437	332	-322	422	-269
Max Shear at Support (lbs)	339	-499	394	-384	484	-329
Member Reaction (lbs)	339	893		867		329
Support Reaction (lbs)	356	893		867		346
Moment (Ft-Lbs)	561	-651	106	-612	527	

Loading on all spans, LDF = 1.25 , 1.0 Dead + 1.0 Floor + 1.0 Roof

Shear at Support (lbs)	606	-948	721	-698	914	-584
Max Shear at Support (lbs)	736	-1082	855	-833	1049	-713
Member Reaction (lbs)	736	1937		1882		713
Support Reaction (lbs)	773	1937		1882		751
Moment (Ft-Lbs)	1217	-1413	230	-1328	1143	
Live Deflection (in)	0.082	-0.007		0.072		
Total Deflection (in)	0.151	-0.014		0.134		

ALTERNATE span loading on odd # spans, LDF = 1.25 , 1.0 Dead + 1.0 Floor + 1.0 Roof

Shear at Support (lbs)	627	-927	530	-507	893	-605
Max Shear at Support (lbs)	756	-1062	628	-605	1027	-735
Member Reaction (lbs)	756	1690		1632		735
Support Reaction (lbs)	793	1690		1632		772
Moment (Ft-Lbs)	1285	-1246	-33	-1158	1213	
Live Deflection (in)	0.096	-0.032		0.086		
Total Deflection (in)	0.166	-0.035		0.147		

ALTERNATE span loading on even # spans, LDF = 1.25 , 1.0 Dead + 1.0 Floor + 1.0 Roof

Shear at Support (lbs)	422	-713	717	-702	689	-405
Max Shear at Support (lbs)	517	-811	852	-836	788	-500
Member Reaction (lbs)	517	1663		1624		500
Support Reaction (lbs)	543	1663		1624		526
Moment (Ft-Lbs)	822	-1199	431	-1140	768	
Live Deflection (in)	0.027	0.028		0.023		
Total Deflection (in)	0.096	0.025		0.084		

ADJACENT span loading over support # 2, LDF = 1.25, 1.0 Dead + 1.0 Floor + 1.0 Roof

Shear at Support (lbs)	599	-955	763	-657	681	-413
Max Shear at Support (lbs)	728	-1090	897	-791	779	-508
Member Reaction (lbs)	728	1987		1570		508
Support Reaction (lbs)	766	1987		1570		534
Moment (Ft-Lbs)	1192	-1475	333	-1073	794	
Live Deflection (in)	0.076	0.012		0.028		
Total Deflection (in)	0.146	0.010		0.089		

PROJECT INFORMATION:

Solar Decathlon
JVA Consulting Engineers, Inc.

OPERATOR INFORMATION:

Kari Rogne
JVA
1319 Spruce Street
Boulder, CO 80305
Phone : (303)444-1951
KRogne@jvajva.com

Z:\Solar Decath KCR\CALCULATIONS\TJ beam Calcs\Clerestory beam.sms

TJ-Beam® 6.25 Serial Number: 7005130721
User: 2 5/15/2007 6:18:37 PM
Page 3 Engine Version: 6.25.71

Livingroom Clerestory Header w/ 3 Support

3 Pcs of 1 1/2" x 5 1/2" 1.3E Solid Sawn Hem-Fir #2

THIS PRODUCT MEETS OR EXCEEDS THE SET DESIGN CONTROLS FOR THE APPLICATION AND LOADS LISTED

ADJACENT span loading over support # 3, LDF = 1.25, 1.0 Dead + 1.0 Floor + 1.0 Roof

Shear at Support (lbs)	430	-705	676	-744	923	-575
Max Shear at Support (lbs)	525	-803	810	-878	1057	-705
Member Reaction (lbs)	525	1613	1936	705		
Support Reaction (lbs)	551	1613	1936	742		
Moment (Ft-Lbs)	847	-1138	336	-1395	1116	
Live Deflection (in)	0.032	0.013	0.067			
Total Deflection (in)	0.102	0.010	0.128			

PROJECT INFORMATION:

Solar Decathlon
JVA Consulting Engineers, Inc.

OPERATOR INFORMATION:

Kari Rogne
JVA
1319 Spruce Street
Boulder, CO 80305
Phone : (303)444-1951
KRogne@jvajva.com

Z:\Solar Decath KCR\CALCULATIONS\TJ beam Calcs\Clerestory beam.sms

TJ-Beam® 6.20 Serial Number: 7005130721
User: 2 2/24/2007 9:57:28 AM
Page 1 Engine Version: 6.20.16

Livingroom Header
Above eastern window

2 Pcs of 1 1/2" x 5 1/2" 1.6E Solid Sawn Douglas Fir #2

THIS PRODUCT MEETS OR EXCEEDS THE SET DESIGN CONTROLS FOR THE APPLICATION AND LOADS LISTED

Member Slope: 0/12 Roof Slope0/12

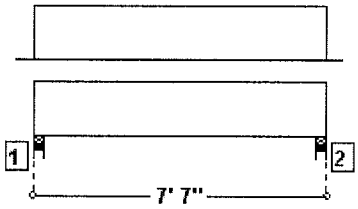

All dimensions are horizontal.

Product Diagram is Conceptual.

LOADS:

Analysis is for a Header (Flush Beam) Member. Tributary Load Width: 6' 6"
Primary Load Group - Roof (psf): 20.0 Live at 125 % duration, 17.6 Dead

SUPPORTS:

		Input Width	Bearing Length	Vertical Reactions (lbs) Live/Dead/Uplift/Total	Detail	Other
1	Stud wall	3.50"	1.50"	493 / 449 / 0 / 942	By Others	None
2	Stud wall	3.50"	1.50"	493 / 449 / 0 / 942	By Others	None

DESIGN CONTROLS:

	Maximum	Design	Control	Control	Location
Shear (lbs)	900	-755	1306	Passed (58%)	Rt. end Span 1 under Roof loading
Moment (Ft-Lbs)	1632	1632	1791	Passed (91%)	MID Span 1 under Roof loading
Live Load Defl (in)		0.121	0.242	Passed (L/716)	MID Span 1 under Roof loading
Total Load Defl (in)		0.232	0.313	Passed (L/375)	MID Span 1 under Roof loading

-Deflection Criteria: STANDARD(LL:L/360,TL:L/240). Additional checks follow.
-TL:0.313"
-Bracing(Lu): All compression edges (top and bottom) must be braced at 7' 7" o/c unless detailed otherwise. Proper attachment and positioning of lateral bracing is required to achieve member stability.
-The allowable shear stress (Fv) has not been increased due to the potential of splits, checks and shakes. See NDS for applicability of increase.
-Analysis based on vertical loads only and assumes structural supports as noted in the input. Axial loads are not considered in this analysis.
-Analysis assumes continuous member. Lap joints, splices and finger joints significantly reduce member performance and have not been considered.

ADDITIONAL NOTES:

-IMPORTANT! The analysis presented is output from software developed by Trus Joist (TJ). TJ warrants the sizing of its products by this software will be accomplished in accordance with TJ product design criteria and code accepted design values. The specific product application, input design loads, and stated dimensions have been provided by the software user. This output has not been reviewed by a TJ Associate.
-Not all products are readily available. Check with your supplier or TJ technical representative for product availability.
-Solid sawn lumber analysis is in accordance with 1997 NDS methodology and is solely presented for comparison purposes. Program limitations and assumptions about this analysis are available through the software's On-line Help. Trus Joist does not warrant the analysis nor the performance of solid sawn lumber materials.
-Allowable Stress Design methodology was used for Building Code UBC analyzing the solid sawn lumber material listed above.
-Note: See TJ SPECIFIER'S / BUILDER'S GUIDES for multiple ply connection.

PROJECT INFORMATION:

Solar Decath

OPERATOR INFORMATION:

Kari Rogne
JVA
1319 Spruce Street
Boulder, CO 80305
Phone : (303)444-1951
KRogne@jvajva.com

C:\Documents and Settings\kcr\Desktop\Living South Window Header.sms

TJ-Beam® 6.20 Serial Number: 7005130721
User: 2 2/24/2007 9:57:28 AM
Page 2 Engine Version: 6.20.16

Livingroom Header
Above eastern window

2 Pcs of 1 1/2" x 5 1/2" 1.6E Solid Sawn Douglas Fir #2

THIS PRODUCT MEETS OR EXCEEDS THE SET DESIGN CONTROLS FOR THE APPLICATION AND LOADS LISTED

Load Group: Primary Load Group

	^	7' 3.00"	^
Max. Vertical Reaction Total (lbs)	942		942
Max. Vertical Reaction Live (lbs)	493		493
Required Bearing Length in	1.50(W)		1.50(W)
Max. Unbraced Length (in)		91	

Loading on all spans, LDF = 0.90 , 1.0 Dead

Shear at Support (lbs)		360	-360
Max Shear at Support (lbs)		429	-429
Member Reaction (lbs)	429		429
Support Reaction (lbs)	449		449
Moment (Ft-Lbs)		777	

Loading on all spans, LDF = 1.25 , 1.0 Dead + 1.0 Floor + 1.0 Roof

Shear at Support (lbs)		755	-755
Max Shear at Support (lbs)		900	-900
Member Reaction (lbs)	900		900
Support Reaction (lbs)	942		942
Moment (Ft-Lbs)		1632	
Live Deflection (in)		0.121	
Total Deflection (in)		0.232	

PROJECT INFORMATION:
Solar Decath

OPERATOR INFORMATION:
Kari Rogne
JVA
1319 Spruce Street
Boulder, CO 80305
Phone : (303)444-1951
KRogne@jvajva.com

C:\Documents and Settings\kcr\Desktop\Living South Window Header.sms

Single 1-3/4" x 5-1/2" VERSA-LAM® 1.7 2650 SP

Roof Header\RB01

BC CALC® 9.5 Design Report - US
Build 91

1 span | No cantilevers | 0/12 slope
06-00-00 OCS

Sunday, August 05, 2007 14:53

b Name:	CUSD 2007	File Name:	BC Calcs
Address:		Description:	RB01
City, State, Zip:	BOULDER, CO 80303	Specifier:	KCR
Customer:	Solar Decathlon Univ. of Co	Designer:	KCR
Code reports:	ESR-1040	Company:	JVA Inc.
		Misc:	

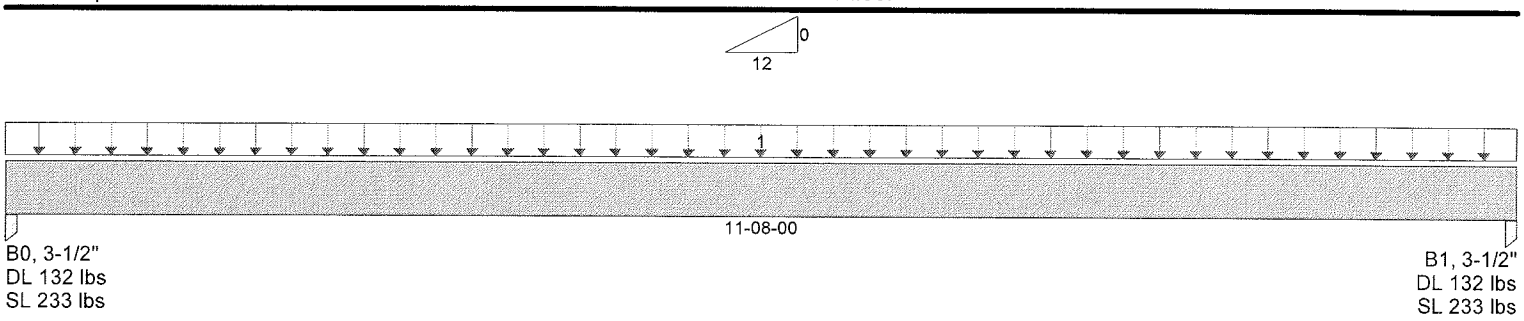

Total Horizontal Product Length = 11-08-00

Load Summary

Tag	Description	Load Type	Ref.	Start	End	Live 100%	Dead 90%	Snow 115%	Wind 133%	Roof Live 125%	OCS
1	Standard Load	Unf. Area (psf)	Left	00-00-00	11-08-00		10	20			02-00-00

Controls Summary

	Value	% Allowable	Duration	Load Case	Span Location
Pos. Moment	985 ft-lbs	40.3%	115%	3	1 - Internal
End Shear	319 lbs	15.2%	115%	3	1 - Left
Total Load Defl.	L/249 (0.54")	72.3%		3	1
Live Load Defl.	L/391 (0.344")	61.5%		3	1
ax Defl.	0.54"	54.0%		3	1
pan / Depth	24.5	n/a		0	1

Bearing Supports

		Dim. (L x W)	Value	% Allow Support	% Allow Member	Material
B0	Post	3-1/2" x 1-3/4"	366 lbs	n/a	8.0%	Unspecified
B1	Post	3-1/2" x 1-3/4"	366 lbs	n/a	8.0%	Unspecified

Cautions

Column at Bearing B0 analyzed for bearing only, column analysis has not been performed.
Column at Bearing B1 analyzed for bearing only, column analysis has not been performed.
For roof members with slope (1/4)/12 or less final design must ensure that ponding instability will not occur.
For roof members with slope (1/2)/12 or less final design must account for Rain-on-Snow surcharge load.

Notes

Design meets Code minimum (L/180) Total load deflection criteria.
Design meets Code minimum (L/240) Live load deflection criteria.
Design meets arbitrary (1") Maximum load deflection criteria.
Member Slope = 0, consider drainage.

Disclosure

Completeness and accuracy of input must be verified by anyone who would rely on output as evidence of suitability for particular application. Output here based on building code-accepted design properties and analysis methods. Installation of BOISE engineered wood products must be in accordance with current Installation Guide and applicable building codes. To obtain Installation Guide or ask questions, please call (888)234-0056 before installation.

Triple 1-3/4" x 5-1/2" VERSA-LAM® 1.7 2650 SP

Roof Header\RB02

BC CALC® 9.5 Design Report - US
Build 91

1 span | No cantilevers | 0/12 slope
06-00-00 OCS

Sunday, August 05, 2007 14:53

b Name:	CUSD 2007	File Name:	BC Calcs
ddress:		Description:	RB02
City, State, Zip:	BOULDER, CO 80303	Specifier:	KCR
Customer:	Solar Decathlon Univ. of Co	Designer:	KCR
Code reports:	ESR-1040	Company:	JVA Inc.
		Misc:	

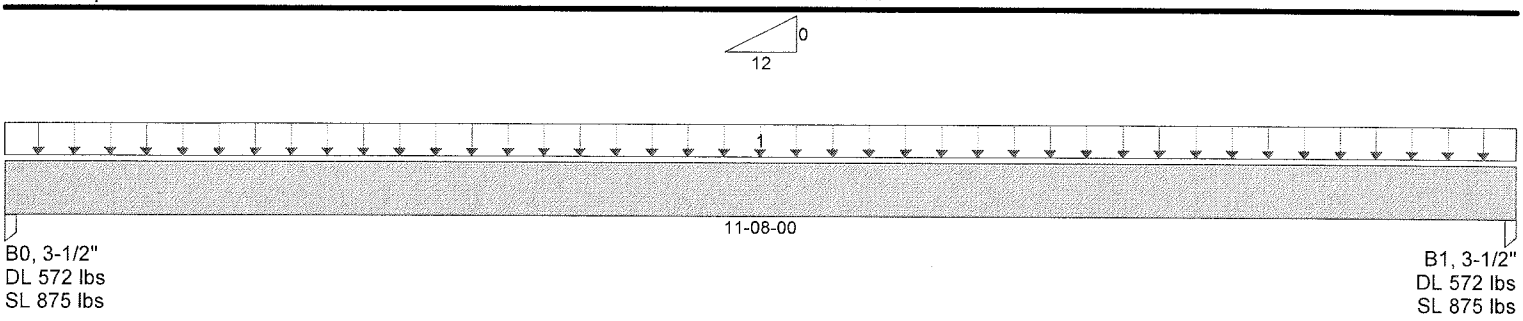

Total Horizontal Product Length = 11-08-00

Load Summary

Tag	Description	Load Type	Ref.	Start	End	Live 100%	Dead 90%	Snow 115%	Wind 133%	Roof Live 125%	OCS
1	Standard Load	Unf. Area (psf)	Left	00-00-00	11-08-00		15	25			06-00-00

Controls Summary

	Value	% Allowable	Duration	Load Case	Span Location
Pos. Moment	3896 ft-lbs	53.2%	115%	3	1 - Internal
End Shear	1261 lbs	20.0%	115%	3	1 - Left
Total Load Defl.	L/189 (0.712")	95.3%		3	1
Live Load Defl.	L/312 (0.431")	76.8%		3	1
ax Defl.	0.712"	71.2%		3	1
pan / Depth	24.5	n/a		0	1

Bearing Supports

		Dim. (L x W)	Value	% Allow Support	% Allow Member	Material
B0	Post	3-1/2" x 3-1/2"	1447 lbs	n/a	15.8%	Unspecified
B1	Post	3-1/2" x 3-1/2"	1447 lbs	n/a	15.8%	Unspecified

Cautions

Member is not fully supported at post B0. A connector is required at this bearing.
Column at Bearing B0 analyzed for bearing only, column analysis has not been performed.
Member is not fully supported at post B1. A connector is required at this bearing.
Column at Bearing B1 analyzed for bearing only, column analysis has not been performed.
For roof members with slope (1/4)/12 or less final design must ensure that ponding instability will not occur.
For roof members with slope (1/2)/12 or less final design must account for Rain-on-Snow surcharge load.

Notes

Design meets Code minimum (L/180) Total load deflection criteria.
Design meets Code minimum (L/240) Live load deflection criteria.
Design meets arbitrary (1") Maximum load deflection criteria.
Member Slope = 0, consider drainage.

Disclosure

Completeness and accuracy of input must be verified by anyone who would rely on output as evidence of suitability for particular application. Output here based on building code-accepted design properties and analysis methods. Installation of BOISE engineered wood products must be in accordance with current Installation Guide and applicable building codes. To obtain Installation Guide or ask questions, please call (888)234-0056 before installation.

b Name: CUSD 2007
Address:
City, State, Zip: BOULDER, CO 80303
Customer: Solar Decathlon Univ. of Co
Code reports: ESR-1040

File Name: BC Calcs
Description: RB02
Specifier: KCR
Designer: KCR
Company: JVA Inc.
Misc:

Connection Diagram

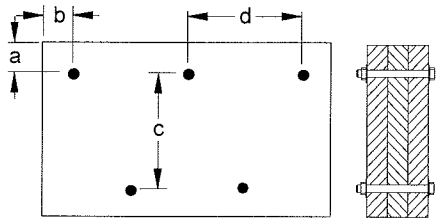

a minimum = 2" c = 1-1/2"
b minimum = 2-1/2" d = 24"

Bolts are assumed to be Grade A307 or Grade 2 or higher.
Member has no side loads.
Connectors are: 1/2 in. Staggered Through Bolt

Disclosure

Completeness and accuracy of input must be verified by anyone who would rely on output as evidence of suitability for particular application. Output here based on building code-accepted design properties and analysis methods. Installation of BOISE engineered wood products must be in accordance with current Installation Guide and applicable building codes. To obtain Installation Guide or ask questions, please call (888)234-0056 before installation.

JVA, Incorporated
1319 Spruce Street
Boulder, CO 80302
Ph: 303.444.1951
Fax: 303.444.1957

JVA, Incorporated
25 Old Town Square
Suite 200
Fort Collins, CO 80524
Ph: 970.225.9099
Fax: 970.225.6923

JVA, Incorporated
P.O. Box 1860
79050 US Hwy 40
Winter Park, CO 80482
Ph: 970.722.7677
Fax: 970.722.7679

Header above South East Window
& South West Door

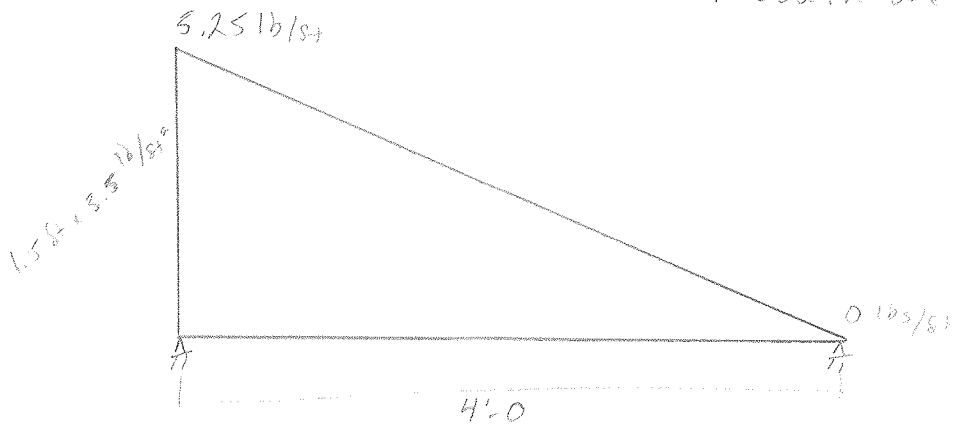

Check 1-2x6 flat

$$w = 5.25\ lb/sft - \frac{5.25\ lb/sft}{4\ ft}(x) = 5.25\ lb/sft - 3.5\ lb/sft^2\,(x)$$

$$5.25(4)\tfrac{1}{2} = W = 10.5\ lbs$$

$$M_{max} = 0.128\,W\ell = 0.128(10.5)(4)$$
$$= 5.376\ lb\,ft = 64.512\ lb\,in$$

$$S_{yy} = 2.663\ in^3 \qquad I_{yy} = 1.547\ in^4$$

$$F_b\ (\text{Hem Fir \#2}) = 850\ psi \qquad F_b' = 0.9(F_b) = 765\ psi$$

$$\frac{M}{S_{yy}} = \frac{64.512\ lb\,in}{2.063\ in^3} = 31.27\ psi = f_b$$

Factor of safty of over 20 for Bending

$$\Delta_{max} = \frac{0.0130\,W\ell^4}{EI} = \frac{0.013(10.5)(38)^4}{(1.547)(1.3\times10^6)} = 0.14\ in$$

$$L/268 = 0.14\ in > L/240$$ (Not accounting for stiffness of SIP's & OSB)

JVA, Incorporated
1319 Spruce Street
Boulder, CO 80302
Ph: 303.444.1951
Fax: 303.444.1957

JVA, Incorporated
25 Old Town Square
Suite 200
Fort Collins, CO 80524
Ph: 970.225.9099
Fax: 970.225.6923

JVA, Incorporated
P.O. Box 1860
79050 US Hwy 40
Winter Park, CO 80482
Ph: 970.722.7677
Fax: 970.722.7679

CONTAINER STRENGTH

Area = .738 in²
11ft Area = 8.856 in²

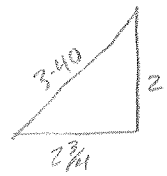

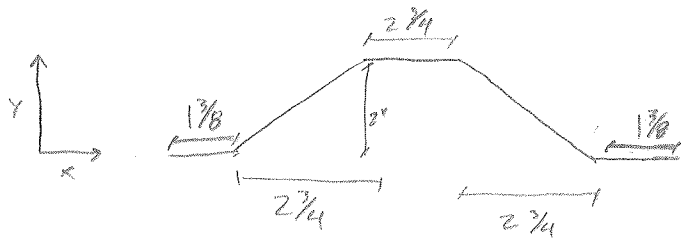

thickness .06 in

14.7 ksi

$$com = \frac{(1\tfrac{3}{8})(0") + 2(3.4")(1") + 2\tfrac{3}{4}"(2")}{2(1\tfrac{3}{8}) + 2(3.4") + 2\tfrac{3}{4}"} = 1$$

Moment of inertia model

$$\frac{1}{12}(2\tfrac{3}{4}")(.06")^3 + (.06)(2\tfrac{3}{4}")(1")^2 = .165$$

$$+2\left[\tfrac{1}{12}(.06")(2")^3 + 0\right. = .08$$

$$+2\left[\tfrac{1}{12}(1\tfrac{3}{8}")(.06")^3 + (.06)(1\tfrac{3}{8})(1")^2\right. = .165$$

$$= .41 \text{ in}^4$$

x12 section = 4.92 in⁴ give 11ft of container

$$\sigma = \frac{M_y}{I_x} \quad \text{where } \sigma = 50 \text{ ksi}$$

$$50 = \frac{M(1")}{4.92 \text{ in}^4} \Rightarrow M = 246 \text{ k·in} = 20.5 \text{ kip·ft}$$

pinned connection

$$r^2 = \frac{I}{A} = \frac{4.92"}{8.856 \text{in}^2} \quad \frac{P}{A} = \frac{C_\pi^2 E}{\left(\frac{L}{r}\right)^2} = \frac{P}{8.856 \text{ in}^2} = \frac{1\pi^2(29{,}000^{ksi})}{\left(\frac{85 \times 12"}{.745 \text{ in}}\right)^2} \quad P = 135.22 \text{ kips}$$

r = .745 in

$$\frac{P}{L} = \frac{135.22^k}{11'} = \boxed{12.2 \text{ kip/ft}}$$

alternate

$$\frac{KL}{r} = \frac{.8(100)}{.745} = 107 \Rightarrow P_A = 13.04^{ksi}(.75 \text{in}) = 9.78^k/11" = .89^k/\text{in} = \boxed{10.6 \text{ kips/feet}}$$

1978 AISC

TABLE 3-50
ALLOWABLE STRESS
FOR COMPRESSION MEMBERS OF 50 KSI SPECIFIED YIELD STRESS STEEL

Main and Secondary Members Kl/r not over 120						Main Members[b] Kl/r 121 to 200				Secondary Members[a,b] l/r 121 to 200			
$\frac{Kl}{r}$	F_a (ksi)	$\frac{Kl}{r}$	F_a (ksi)	$\frac{Kl}{r}$	F_a (ksi)	$\frac{Kl}{r}$	F_a (ksi)	$\frac{Kl}{r}$	F_a (ksi)	$\frac{l}{r}$	F_{as} (ksi)	$\frac{l}{r}$	F_{as} (ksi)
1	29.94	41	25.69	81	18.81	121	10.20	161	5.76	121	10.25	161	7.25
2	29.87	42	25.55	82	18.61	122	10.03	162	5.69	122	10.13	162	7.20
3	29.80	43	25.40	83	18.41	123	9.87	163	5.62	123	10.02	163	7.16
4	29.73	44	25.26	84	18.20	124	9.71	164	5.55	124	9.91	164	7.12
5	29.66	45	25.11	85	17.99	125	9.56	165	5.49	125	9.80	165	7.08
6	29.58	46	24.96	86	17.79	126	9.41	166	5.42	126	9.70	166	7.04
7	29.50	47	24.81	87	17.58	127	9.26	167	5.35	127	9.59	167	7.00
8	29.42	48	24.66	88	17.37	128	9.11	168	5.29	128	9.49	168	6.96
9	29.34	49	24.51	89	17.15	129	8.97	169	5.23	129	9.40	169	6.93
10	29.26	50	24.35	90	16.94	130	8.84	170	5.17	130	9.30	170	6.89
11	29.17	51	24.19	91	16.72	131	8.70	171	5.11	131	9.21	171	6.85
12	29.08	52	24.04	92	16.50	132	8.57	172	5.05	132	9.12	172	6.82
13	28.99	53	23.88	93	16.29	133	8.44	173	4.99	133	9.03	173	6.79
14	28.90	54	23.72	94	16.06	134	8.32	174	4.93	134	8.94	174	6.76
15	28.80	55	23.55	95	15.84	135	8.19	175	4.88	135	8.86	175	6.73
16	28.71	56	23.39	96	15.62	136	8.07	176	4.82	136	8.78	176	6.70
17	28.61	57	23.22	97	15.39	137	7.96	177	4.77	137	8.70	177	6.67
18	28.51	58	23.06	98	15.17	138	7.84	178	4.71	138	8.62	178	6.64
19	28.40	59	22.89	99	14.94	139	7.73	179	4.66	139	8.54	179	6.61
20	28.30	60	22.72	100	14.71	140	7.62	180	4.61	140	8.47	180	6.58
21	28.19	61	22.55	101	14.47	141	7.51	181	4.56	141	8.39	181	6.56
22	28.08	62	22.37	102	14.24	142	7.41	182	4.51	142	8.32	182	6.53
23	27.97	63	22.20	103	14.00	143	7.30	183	4.46	143	8.25	183	6.51
24	27.86	64	22.02	104	13.77	144	7.20	184	4.41	144	8.18	184	6.49
25	27.75	65	21.85	105	13.53	145	7.10	185	4.36	145	8.12	185	6.46
26	27.63	66	21.67	106	13.29	146	7.01	186	4.32	146	8.05	186	6.44
27	27.52	67	21.49	107	13.04	147	6.91	187	4.27	147	7.99	187	6.42
28	27.40	68	21.31	108	12.80	148	6.82	188	4.23	148	7.93	188	6.40
29	27.28	69	21.12	109	12.57	149	6.73	189	4.18	149	7.87	189	6.38
30	27.15	70	20.94	110	12.34	150	6.64	190	4.14	150	7.81	190	6.36
31	27.03	71	20.75	111	12.12	151	6.55	191	4.09	151	7.75	191	6.35
32	26.90	72	20.56	112	11.90	152	6.46	192	4.05	152	7.69	192	6.33
33	26.77	73	20.38	113	11.69	153	6.38	193	4.01	153	7.64	193	6.31
34	26.64	74	20.19	114	11.49	154	6.30	194	3.97	154	7.59	194	6.30
35	26.51	75	19.99	115	11.29	155	6.22	195	3.93	155	7.53	195	6.28
36	26.38	76	19.80	116	11.10	156	6.14	196	3.89	156	7.48	196	6.27
37	26.25	77	19.61	117	10.91	157	6.06	197	3.85	157	7.43	197	6.26
38	26.11	78	19.41	118	10.72	158	5.98	198	3.81	158	7.39	198	6.24
39	25.97	79	19.21	119	10.55	159	5.91	199	3.77	159	7.34	199	6.23
40	25.83	80	19.01	120	10.37	160	5.83	200	3.73	160	7.29	200	6.22

[a] K taken as 1.0 for secondary members.
[b] Values also applicable for steel of any yield stress ≥39 ksi.
Note: $C_c = 107.0$

'IED YIELD STRESS STEEL

ers :00	Secondary Members[a] l/r 121 to 200			
F_a (ksi)	$\frac{l}{r}$	F_{as} (ksi)	$\frac{l}{r}$	F_{as} (ksi)
5.76	121	10.19	161	7.25
5.69	122	10.09	162	7.20
5.62	123	10.00	163	7.16
5.55	124	9.90	164	7.12
5.49	125	9.80	165	7.08
5.42	126	9.70	166	7.04
5.35	127	9.59	167	7.00
5.29	128	9.49	168	6.96
5.23	129	9.40	169	6.93
5.17	130	9.30	170	6.89
5.11	131	9.21	171	6.85
5.05	132	9.12	172	6.82
4.99	133	9.03	173	6.79
4.93	134	8.94	174	6.76
4.88	135	8.86	175	6.73
4.82	136	8.78	176	6.70
4.77	137	8.70	177	6.67
4.71	138	8.62	178	6.64
4.66	139	8.54	179	6.61
4.61	140	8.47	180	6.58
4.56	141	8.39	181	6.56
4.51	142	8.32	182	6.53
	143	8.25	183	6.51
	144	8.18	184	6.49
4.36	145	8.12	185	6.46
4.32	146	8.05	186	6.44
4.27	147	7.99	187	6.42
4.23	148	7.93	188	6.40
4.18	149	7.87	189	6.38
4.14	150	7.81	190	6.36
4.09	151	7.75	191	6.35
4.05	152	7.69	192	6.33
4.01	153	7.64	193	6.31
3.97	154	7.59	194	6.30
3.93	155	7.53	195	6.28
3.89	156	7.48	196	6.27
3.85	157	7.43	197	6.26
3.81	158	7.39	198	6.24
3.77	159	7.34	199	6.23
3.73	160	7.29	200	6.22

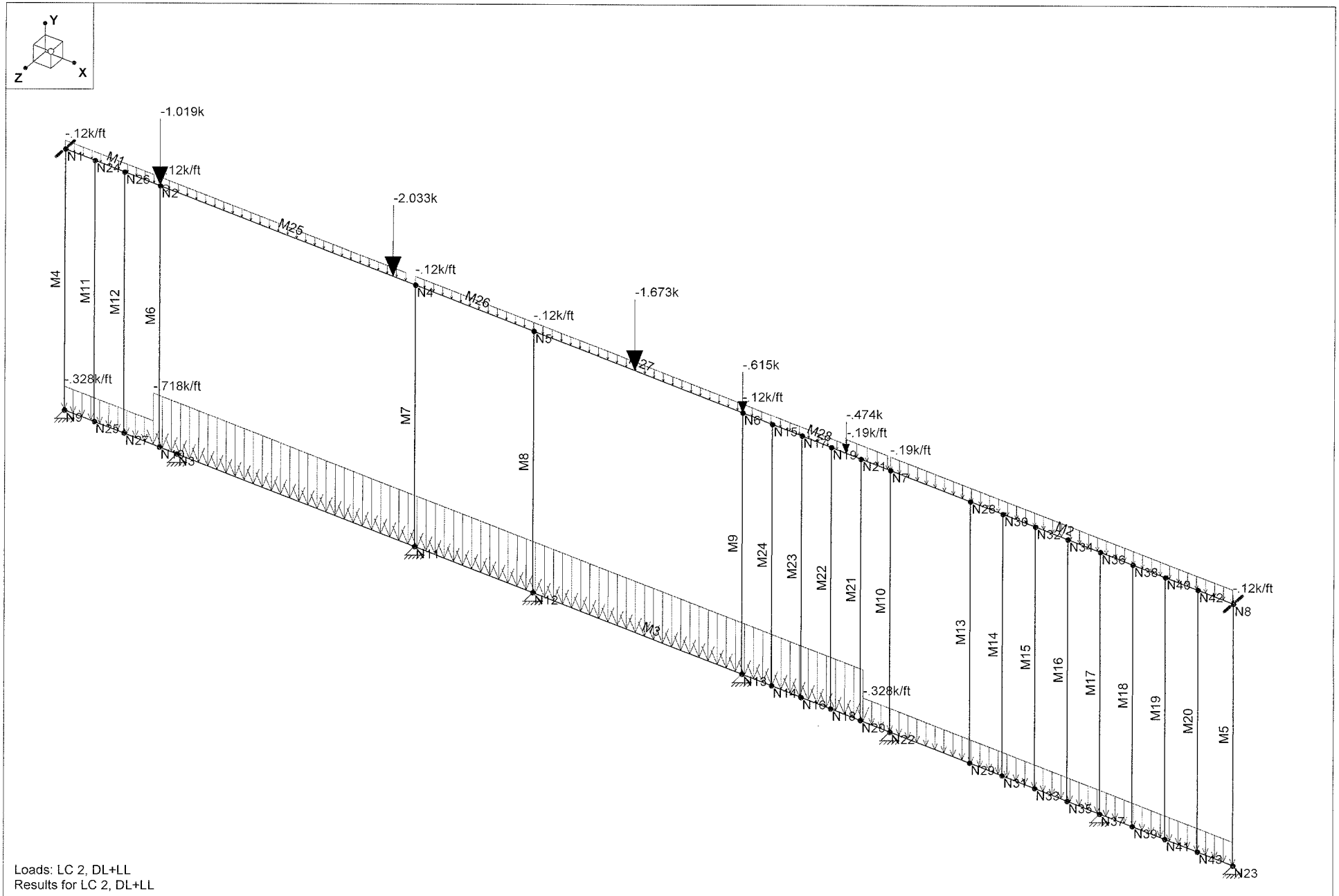

Loads: LC 2, DL+LL
Results for LC 2, DL+LL

JVA Consulting Engineers, Inc.	Solar D. Cargo Front Wall	
Kari Rogne		Aug 5, 2007 at 3:52 PM
		Container Front Wall.r3d

CU 288

Company : JVA Consulting Engineers, Inc.
Designer : Kari Rogne
Job Number :
Solar D. Cargo Front Wall

Aug 5, 2007
3:57 PM
Checked By:_____

Member AISC ASD Steel Code Checks (By Combination)

	LC	Member	Shape	UC Max	Loc[ft]	Shear UC	Loc[ft]	Dir	Fa[ksi]	Ft[ksi]	Fby[ksi]	Fbz[ksi]	Cb	Cmy	Cmz	Eqn
1	2	M1	HSS2X2X4	.052	2	.012	2	y	21.6	21.6	23.76	23.76	1	.6	.85	H2-1
2	2	M2	HSS2X2X4	.207	0	.028	0	y	21.6	21.6	21.6	21.6	1.557	.6	.85	H1-2
3	2	M3	6x1x.25	.270	3.703	.056	3.703	y	30	30	37.5	30	1	.6	.85	H2-1
4	2	M4	HSS4X4X4	.003	9	.000	0	y	20.755	30	30	30	1.086	.6	.931	H1-1
5	2	M5	HSS4X4X4	.009	0	.000	0	y	20.755	30	33	33	2.3	.6	.256	H1-2
6	2	M6	HSS2X2X4	.176	9	.001	0	y	6.331	21.6	23.76	23.76	2.3	.6	.247	H1-1
7	2	M7	HSS2X2X4	.327	9	.001	0	y	6.331	21.6	21.6	21.6	2.3	.6	.3	H1-1
8	2	M8	HSS2X2X4	.199	9	.001	0	y	6.331	21.6	21.6	21.6	2.3	.6	.282	H1-1
9	2	M9	HSS2X2X4	.220	9	.001	0	y	6.331	21.6	23.76	23.76	2.3	.6	.244	H1-1
10	2	M10	HSS2X2X4	.073	9	.000	0	y	6.331	21.6	21.6	21.6	2.3	.6	.298	H1-1
11	2	M11	1x1/16	.084	9	.000	0	y	1.067	30	33	33	1.75	.6	.6	H1-1
12	2	M12	1x1/16	.305	9	.000	0	y	1.067	30	33	33	2.3	.6	.404	H1-1
13	2	M13	HSS2X2X4	.047	9	.001	0	y	6.331	21.6	23.76	23.76	2.3	.6	.252	H1-1
14	2	M14	1x1/16	.143	9	.000	0	y	1.067	30	33	33	1.75	.6	.6	H1-1
15	2	M15	1x1/16	.195	9	.000	0	y	1.067	30	33	33	2.3	.6	.203	H1-1
16	2	M16	1x1/16	.220	9	.000	0	y	1.067	30	33	33	2.3	.6	.202	H1-1
17	2	M17	1x1/16	.364	9	.000	0	y	1.067	30	33	33	2.3	.6	.201	H1-1
18	2	M18	1x1/16	.218	9	.000	0	y	1.067	30	33	33	2.3	.6	.203	H1-1
19	2	M19	1x1/16	.201	9	.000	0	y	1.067	30	33	33	2.3	.6	.208	H1-1
20	2	M20	1x1/16	.170	9	.000	0	y	1.067	30	33	33	1.75	.6	.6	H1-1
21	2	M21	1x1/16	.316	0	.000	0	y	1.067	30	33	33	2.3	.6	.325	H1-1
22	2	M22	1x1/16	.005	9	.000	0	y	1.067	30	33	33	2.3	.6	.276	H2-1
23	2	M23	1x1/16	.025	0	.000	0	y	1.067	30	33	33	2.3	.6	.317	H1-1
24	2	M24	1x1/16	.659	0	.000	0	y	1.067	30	33	33	1.75	.6	.6	H1-1
25	2	M25	HSS8X2X4	.116	8.63	.048	8.63	y	9.517	21.6	21.6	21.6	1.75	.6	1	H1-3
26	2	M26	HSS8X2X4	.115	4	.005	4	y	17.615	21.6	21.6	21.6	1.015	.6	.85	H2-1
27	2	M27	HSS8X2X4	.168	3.388	.026	0	y	12.644	21.6	23.76	23.76	1	.6	.85	H1-2
28	2	M28	HSS8X2X4	.088	0	.012	1.042	y	16.161	21.6	23.76	23.76	1.548	.6	.85	H2-1

Joint Coordinates and Temperatures

	Label	X [ft]	Y [ft]	Z [ft]	Temp [F]	Detach From Di...
1	N1	0	0	0	0	
2	N2	3.2	0	0	0	
3	N3	3.8	-9	0	0	
4	N4	11.83	0	0	0	
5	N5	15.83	0	0	0	
6	N6	22.9	0	0	0	
7	N7	27.9	0	0	0	
8	N8	39.5	0	0	0	
9	N9	0	-9	0	0	
10	N10	3.2	-9	0	0	
11	N11	11.83	-9	0	0	
12	N12	15.83	-9	0	0	
13	N13	22.9	-9	0	0	
14	N14	23.9	-9	0	0	
15	N15	23.9	0	0	0	
16	N16	24.9	-9	0	0	
17	N17	24.9	0	0	0	
18	N18	25.9	-9	0	0	
19	N19	25.9	0	0	0	
20	N20	26.9	-9	0	0	
21	N21	26.9	0	0	0	
22	N22	27.9	-9	0	0	
23	N23	39.5	-9	0	0	
24	N24	1	0	0	0	

Company : JVA Consulting Engineers, Inc.
Designer : Kari Rogne
Job Number :
Solar D. Cargo Front Wall

Aug 5, 2007
3:57 PM
Checked By:_____

Joint Coordinates and Temperatures (Continued)

	Label	X [ft]	Y [ft]	Z [ft]	Temp [F]	Detach From Di...
25	N25	1	-9	0	0	
26	N26	2	0	0	0	
27	N27	2	-9	0	0	
28	N28	30.6	0	0	0	
29	N29	30.6	-9	0	0	
30	N30	31.7	0	0	0	
31	N31	31.7	-9	0	0	
32	N32	32.8	0	0	0	
33	N33	32.8	-9	0	0	
34	N34	33.9	0	0	0	
35	N35	33.9	-9	0	0	
36	N36	35	0	0	0	
37	N37	35	-9	0	0	
38	N38	36.1	0	0	0	
39	N39	36.1	-9	0	0	
40	N40	37.2	0	0	0	
41	N41	37.2	-9	0	0	
42	N42	38.3	0	0	0	
43	N43	38.3	-9	0	0	

Hot Rolled Steel Section Sets

	Label	Shape	Type	Design List	Material	Design Rules	A [in2]	Iyy [in4]	Izz [in4]	J [in4]
1	Header	HSS8X2X4	Beam	Rectangula...	A36	Typical	4.295	2.936	28.431	9.346
2	HSS	HSS2X2X4	Column	Tube	A36	Typical	1.505	.744	.744	1.31
3	UPPER TUBE	HSS2X2X4	Beam	Channel	A36	Typical	1.505	.744	.744	1.31

Member Primary Data

	Label	I Joint	J Joint	K Joint	Rotate(deg)	Section/Shape	Type	Design List	Material	Design Rules
1	M1	N1	N2			UPPER TUBE	Beam	Channel	A36	Typical
2	M2	N7	N8			UPPER TUBE	Beam	Channel	A36	Typical
3	M3	N9	N23			6x1x.25	Beam	None	A992	Typical
4	M4	N1	N9			HSS4X4X4	Column	None	A992	Typical
5	M5	N23	N8			HSS4X4X4	Column	None	A992	Typical
6	M6	N2	N10			HSS	Column	Tube	A36	Typical
7	M7	N4	N11			HSS	Column	Tube	A36	Typical
8	M8	N5	N12			HSS	Column	Tube	A36	Typical
9	M9	N6	N13			HSS	Column	Tube	A36	Typical
10	M10	N7	N22			HSS	Column	Tube	A36	Typical
11	M11	N24	N25			1x1/16	Column	None	A992	Typical
12	M12	N26	N27			1x1/16	Column	None	A992	Typical
13	M13	N28	N29			HSS	Column	Tube	A36	Typical
14	M14	N30	N31			1x1/16	Column	None	A992	Typical
15	M15	N32	N33			1x1/16	Column	None	A992	Typical
16	M16	N34	N35			1x1/16	Column	None	A992	Typical
17	M17	N36	N37			1x1/16	Column	None	A992	Typical
18	M18	N38	N39			1x1/16	Column	None	A992	Typical
19	M19	N40	N41			1x1/16	Column	None	A992	Typical
20	M20	N42	N43			1x1/16	Column	None	A992	Typical
21	M21	N20	N21			1x1/16	Column	None	A992	Typical
22	M22	N18	N19			1x1/16	Column	None	A992	Typical
23	M23	N16	N17			1x1/16	Column	None	A992	Typical
24	M24	N14	N15			1x1/16	Column	None	A992	Typical
25	M25	N2	N4			Header	Beam	Rectangul...	A36	Typical
26	M26	N4	N5			Header	Beam	Rectangul...	A36	Typical
27	M27	N5	N6			Header	Beam	Rectangul...	A36	Typical

Member Primary Data (Continued)

	Label	I Joint	J Joint	K Joint	Rotate(deg)	Section/Shape	Type	Design List	Material	Design Rules
28	M28	N6	N7			Header	Beam	Rectangul...	A36	Typical

Member Distributed Loads (BLC 1 : Dead Load)

	Member Label	Direction	Start Magnitude[k/ft,d...	End Magnitude[k/ft,d...	Start Location[ft,%]	End Location[ft,%]
1	M1	Y	-.04	-.04	0	3
2	M2	Y	-.089	-.089	0	11.58
3	M2	Y	-.04	-.04	11.58	13.58
4	M3	Y	-.128	-.128	0	3
5	M3	Y	-.218	-.218	3	27
6	M3	Y	-.128	-.128	27	39.5
7	M25	Y	-.04	-.04	0	8.3
8	M26	Y	-.04	-.04	0	5
9	M27	Y	-.04	-.04	0	6.9
10	M28	Y	-.04	-.04	0	3.52
11	M28	Y	-.089	-.089	3.52	4.9

Member Distributed Loads (BLC 2 : Live)

	Member Label	Direction	Start Magnitude[k/ft,d...	End Magnitude[k/ft,d...	Start Location[ft,%]	End Location[ft,%]
1	M1	Y	-.08	-.08	0	3
2	M2	Y	-.101	-.101	0	11.58
3	M2	Y	-.08	-.08	11.58	13.58
4	M3	Y	-.2	-.2	0	3
5	M3	Y	-.5	-.5	3	27
6	M3	Y	-.2	-.2	27	39.5
7	M25	Y	-.08	-.08	0	8.3
8	M26	Y	-.08	-.08	0	5
9	M27	Y	-.08	-.08	0	6.9
10	M28	Y	-.08	-.08	0	3.52
11	M28	Y	-.101	-.101	3.52	4.9

Member Point Loads (BLC 1 : Dead Load)

	Member Label	Direction	Magnitude[k,k-ft]	Location[ft,%]
1	M25	Y	-.477	0
2	M25	Y	-.952	7.88
3	M27	Y	-.755	3.42
4	M28	Y	-.225	3.5
5	M28	Y	-.235	0

Member Point Loads (BLC 2 : Live)

	Member Label	Direction	Magnitude[k,k-ft]	Location[ft,%]
1	M25	Y	-.542	0
2	M25	Y	-1.081	7.88
3	M27	Y	-.918	3.42
4	M28	Y	-.38	0
5	M28	Y	-.249	3.5

Joint Reactions (By Combination)

	LC	Joint Label	X [k]	Y [k]	Z [k]	MX [k-ft]	MY [k-ft]	MZ [k-ft]
1	2	N1	0	0	0	0	0	0
2	2	N8	0	0	0	0	0	0
3	2	N9	.001	.392	0	0	0	0
4	2	N11	-.016	7.412	0	0	0	0

Company : JVA Consulting Engineers, Inc.
Designer : Kari Rogne
Job Number : Solar D. Cargo Front Wall

Aug 5, 2007
3:57 PM
Checked By:_____

Joint Reactions (By Combination) (Continued)

	LC	Joint Label	X [k]	Y [k]	Z [k]	MX [k-ft]	MY [k-ft]	MZ [k-ft]
5	2	N12	.016	5.403	0	0	0	0
6	2	N13	-.008	7.347	0	0	0	0
7	2	N22	.012	3.93	0	0	0	0
8	2	N23	-.013	.93	0	0	0	0
9	2	N3	.006	6.413	0	0	0	0
10	2	N37	.001	3.661	0	0	0	0
11	2	Totals:	0	35.488	0			
12	2	COG (ft):	X: 18.044	Y: -5.895	Z: 0			

Member Section Deflections

	LC	Member Label	Sec	x [in]	y [in]	z [in]	x Rotate[rad]	(n) L/y Ratio	(n) L/z Ratio
1	2	M1	1	-.01	0	0	0	NC	NC
2			2	-.01	0	0	0	NC	NC
3			3	-.01	.002	0	0	NC	NC
4			4	-.01	.001	0	0	NC	NC
5			5	-.01	-.001	0	0	NC	NC
6	2	M2	1	-.01	-.001	0	0	NC	NC
7			2	-.01	-.022	0	0	6745.805	NC
8			3	-.01	-.011	0	0	NC	NC
9			4	-.01	-.001	0	0	NC	NC
10			5	-.01	0	0	0	NC	NC
11	2	M3	1	0	0	0	0	NC	NC
12			2	0	-.036	0	0	NC	NC
13			3	0	-.034	0	0	NC	NC
14			4	0	-.013	0	0	NC	NC
15			5	0	0	0	0	NC	NC
16	2	M4	1	0	.01	0	0	NC	NC
17			2	0	.008	0	0	NC	NC
18			3	0	.005	0	0	NC	NC
19			4	0	.003	0	0	NC	NC
20			5	0	0	0	0	NC	NC
21	2	M5	1	0	0	0	0	NC	NC
22			2	0	.003	0	0	NC	NC
23			3	0	.005	0	0	NC	NC
24			4	0	.007	0	0	NC	NC
25			5	0	.01	0	0	NC	NC
26	2	M6	1	.001	.01	0	0	NC	NC
27			2	0	.01	0	0	NC	NC
28			3	0	.003	0	0	NC	NC
29			4	-.002	-.002	0	0	NC	NC
30			5	-.003	0	0	0	NC	NC
31	2	M7	1	.007	.01	0	0	NC	NC
32			2	.005	.007	0	0	NC	NC
33			3	.004	.013	0	0	NC	NC
34			4	.002	.016	0	0	8138.251	NC
35			5	0	0	0	0	NC	NC
36	2	M8	1	.004	.01	0	0	NC	NC
37			2	.003	.01	0	0	NC	NC
38			3	.002	-.002	0	0	NC	NC
39			4	.001	-.01	0	0	NC	NC
40			5	0	0	0	0	NC	NC
41	2	M9	1	.005	.01	0	0	NC	NC
42			2	.004	.005	0	0	NC	NC
43			3	.002	.007	0	0	NC	NC
44			4	.001	.008	0	0	NC	NC
45			5	0	0	0	0	NC	NC

Company : JVA Consulting Engineers, Inc.
Designer : Kari Rogne
Job Number :
Solar D. Cargo Front Wall

Aug 5, 2007
3:57 PM
Checked By:_____

Member Section Deflections (Continued)

	LC	Member Label	Sec	x [in]	y [in]	z [in]	x Rotate[rad]	(n) L/y Ratio	(n) L/z Ratio
46	2	M10	1	.001	.01	0	0	NC	NC
47			2	.001	.008	0	0	NC	NC
48			3	0	.002	0	0	NC	NC
49			4	0	-.003	0	0	NC	NC
50			5	0	0	0	0	NC	NC
51	2	M11	1	-.001	.01	0	0	NC	NC
52			2	-.001	.007	0	0	NC	NC
53			3	-.001	.005	0	0	NC	NC
54			4	-.001	.003	0	0	NC	NC
55			5	-.001	0	0	0	NC	NC
56	2	M12	1	-.002	.01	0	0	NC	NC
57			2	-.002	.01	0	0	NC	NC
58			3	-.002	.008	0	0	NC	NC
59			4	-.003	.003	0	0	NC	NC
60			5	-.003	0	0	0	NC	NC
61	2	M13	1	.021	.01	0	0	NC	NC
62			2	.021	.01	0	0	NC	NC
63			3	.021	.003	0	0	NC	NC
64			4	.021	-.003	0	0	NC	NC
65			5	.02	0	0	0	NC	NC
66	2	M14	1	.023	.01	0	0	NC	NC
67			2	.023	.008	0	0	NC	NC
68			3	.023	.005	0	0	NC	NC
69			4	.022	.003	0	0	NC	NC
70			5	.022	0	0	0	NC	NC
71	2	M15	1	.018	.01	0	0	NC	NC
72			2	.018	.003	0	0	NC	NC
73			3	.018	.005	0	0	NC	NC
74			4	.018	.007	0	0	NC	NC
75			5	.018	0	0	0	NC	NC
76	2	M16	1	.009	.01	0	0	NC	NC
77			2	.009	.001	0	0	NC	NC
78			3	.009	.005	0	0	NC	NC
79			4	.009	.009	0	0	NC	NC
80			5	.008	0	0	0	NC	NC
81	2	M17	1	.001	.01	0	0	NC	NC
82			2	.001	.005	0	0	NC	NC
83			3	0	.005	0	0	NC	NC
84			4	0	.005	0	0	NC	NC
85			5	0	0	0	0	NC	NC
86	2	M18	1	0	.01	0	0	NC	NC
87			2	0	.01	0	0	NC	NC
88			3	0	.005	0	0	NC	NC
89			4	0	0	0	0	NC	NC
90			5	0	0	0	0	NC	NC
91	2	M19	1	.002	.01	0	0	NC	NC
92			2	.002	.01	0	0	NC	NC
93			3	.002	.005	0	0	NC	NC
94			4	.002	0	0	0	NC	NC
95			5	.002	0	0	0	NC	NC
96	2	M20	1	.003	.01	0	0	NC	NC
97			2	.003	.007	0	0	NC	NC
98			3	.002	.005	0	0	NC	NC
99			4	.002	.002	0	0	NC	NC
100			5	.002	0	0	0	NC	NC
101	2	M21	1	0	0	0	0	NC	NC
102			2	0	.003	0	0	NC	NC

Member Section Deflections (Continued)

	LC	Member Label	Sec	x [in]	y [in]	z [in]	x Rotate[rad]	(n) L/y Ratio	(n) L/z Ratio
103			3	0	.006	0	0	NC	NC
104			4	0	.009	0	0	NC	NC
105			5	0	.01	0	0	NC	NC
106	2	M22	1	0	0	0	0	NC	NC
107			2	0	.002	0	0	NC	NC
108			3	0	.006	0	0	NC	NC
109			4	0	.009	0	0	NC	NC
110			5	0	.01	0	0	NC	NC
111	2	M23	1	0	0	0	0	NC	NC
112			2	0	0	0	0	NC	NC
113			3	0	.003	0	0	NC	NC
114			4	0	.008	0	0	NC	NC
115			5	0	.01	0	0	NC	NC
116	2	M24	1	.001	0	0	0	NC	NC
117			2	0	0	0	0	NC	NC
118			3	0	.002	0	0	NC	NC
119			4	0	.006	0	0	NC	NC
120			5	-.001	.01	0	0	NC	NC
121	2	M25	1	-.01	-.001	0	0	NC	NC
122			2	-.01	-.017	0	0	7051.714	NC
123			3	-.01	-.025	0	0	5023.607	NC
124			4	-.01	-.02	0	0	7077.087	NC
125			5	-.01	-.007	0	0	NC	NC
126	2	M26	1	-.01	-.007	0	0	NC	NC
127			2	-.01	-.002	0	0	NC	NC
128			3	-.01	0	0	0	NC	NC
129			4	-.01	-.001	0	0	NC	NC
130			5	-.01	-.004	0	0	NC	NC
131	2	M27	1	-.01	-.004	0	0	NC	NC
132			2	-.01	-.015	0	0	8135.449	NC
133			3	-.01	-.021	0	0	5121.06	NC
134			4	-.01	-.015	0	0	8059.627	NC
135			5	-.01	-.005	0	0	NC	NC
136	2	M28	1	-.01	-.005	0	0	NC	NC
137			2	-.01	0	0	0	NC	NC
138			3	-.01	0	0	0	NC	NC
139			4	-.01	0	0	0	NC	NC
140			5	-.01	-.001	0	0	NC	NC

Member Section Stresses

	LC	Member Label	Sec	Axial[ksi]	y Shear[ksi]	z Shear[ksi]	y top Bending[ksi]	y bot Bend..	z top Bend..	z bot Bend...
1	2	M1	1	0	.065	0	-.063	.063	0	0
2			2	0	-.043	0	.068	-.068	0	0
3			3	0	-.088	0	-.527	.527	0	0
4			4	0	.12	0	-.357	.357	0	0
5			5	0	.038	0	.476	-.476	0	0
6	2	M2	1	.004	.403	0	-4.473	4.473	0	0
7			2	.01	.146	0	.266	-.266	0	0
8			3	.009	-.144	0	-.068	.068	0	0
9			4	.008	.061	0	.082	-.082	0	0
10			5	.009	-.189	0	-.871	.871	0	0
11	2	M3	1	0	.076	0	.012	-.012	0	0
12			2	0	-.476	0	3.163	-3.163	0	0
13			3	0	-.134	0	5.019	-5.019	0	0
14			4	.001	.34	0	1.042	-1.042	0	0
15			5	0	-.217	0	-.158	.158	0	0

Company : JVA Consulting Engineers, Inc.
Designer : Kari Rogne
Job Number :
Solar D. Cargo Front Wall

Aug 5, 2007
3:57 PM
Checked By:_____

Member Section Stresses (Continued)

	LC	Member Label	Sec	Axial[ksi]	y Shear[ksi]	z Shear[ksi]	y top Bending[ksi]	y bot Bend..	z top Bend..	z bot Bend..
16	2	M4	1	.018	0	0	-.012	.012	0	0
17			2	.026	0	0	-.013	.013	0	0
18			3	.033	0	0	-.013	.013	0	0
19			4	.041	0	0	-.014	.014	0	0
20			5	.049	0	0	-.015	.015	0	0
21	2	M5	1	.083	.007	0	-.194	.194	0	0
22			2	.075	.007	0	-.104	.104	0	0
23			3	.067	.007	0	-.014	.014	0	0
24			4	.06	.007	0	.076	-.076	0	0
25			5	.052	.007	0	.167	-.167	0	0
26	2	M6	1	1.043	.008	0	-.476	.476	0	0
27			2	1.05	.008	0	-.222	.222	0	0
28			3	1.058	.008	0	.032	-.032	0	0
29			4	1.066	.008	0	.286	-.286	0	0
30			5	1.073	.008	0	.54	-.54	0	0
31	2	M7	1	1.879	-.017	0	.973	-.973	0	0
32			2	1.887	-.017	0	.405	-.405	0	0
33			3	1.894	-.017	0	-.163	.163	0	0
34			4	1.902	-.017	0	-.73	.73	0	0
35			5	1.91	-.017	0	-1.298	1.298	0	0
36	2	M8	1	1.101	.017	0	-1.036	1.036	0	0
37			2	1.109	.017	0	-.451	.451	0	0
38			3	1.116	.017	0	.134	-.134	0	0
39			4	1.124	.017	0	.719	-.719	0	0
40			5	1.132	.017	0	1.304	-1.304	0	0
41	2	M9	1	1.309	-.009	0	.558	-.558	0	0
42			2	1.317	-.009	0	.262	-.262	0	0
43			3	1.324	-.009	0	-.035	.035	0	0
44			4	1.332	-.009	0	-.331	.331	0	0
45			5	1.34	-.009	0	-.627	.627	0	0
46	2	M10	1	.384	.007	0	-.385	.385	0	0
47			2	.392	.007	0	-.161	.161	0	0
48			3	.399	.007	0	.063	-.063	0	0
49			4	.407	.007	0	.287	-.287	0	0
50			5	.415	.007	0	.511	-.511	0	0
51	2	M11	1	.058	0	0	.022	-.022	0	0
52			2	.066	0	0	.01	-.01	0	0
53			3	.073	0	0	-.001	.001	0	0
54			4	.081	0	0	-.013	.013	0	0
55			5	.089	0	0	-.025	.025	0	0
56	2	M12	1	.294	0	0	-.095	.095	0	0
57			2	.301	0	0	-.06	.06	0	0
58			3	.309	0	0	-.024	.024	0	0
59			4	.317	0	0	.011	-.011	0	0
60			5	.324	0	0	.047	-.047	0	0
61	2	M13	1	.217	.01	0	-.602	.602	0	0
62			2	.225	.01	0	-.279	.279	0	0
63			3	.233	.01	0	.045	-.045	0	0
64			4	.24	.01	0	.368	-.368	0	0
65			5	.248	.01	0	.691	-.691	0	0
66	2	M14	1	.122	0	0	-.001	.001	0	0
67			2	.13	0	0	-.002	.002	0	0
68			3	.138	0	0	-.003	.003	0	0
69			4	.145	0	0	-.004	.004	0	0
70			5	.153	0	0	-.005	.005	0	0
71	2	M15	1	.174	-.002	0	.376	-.376	0	0
72			2	.182	-.002	0	.189	-.189	0	0

Member Section Stresses (Continued)

	LC	Member Label	Sec	Axial[ksi]	y Shear[ksi]	z Shear[ksi]	y top Bending[ksi]	y bot Bend..	z top Bend..	z bot Bend..
73			3	.189	-.002	0	.002	-.002	0	0
74			4	.197	-.002	0	-.185	.185	0	0
75			5	.205	-.002	0	-.372	.372	0	0
76	2	M16	1	.2	-.002	0	.5	-.5	0	0
77			2	.208	-.002	0	.251	-.251	0	0
78			3	.216	-.002	0	.001	-.001	0	0
79			4	.223	-.002	0	-.248	.248	0	0
80			5	.231	-.002	0	-.498	.498	0	0
81	2	M17	1	.356	0	0	.193	-.193	0	0
82			2	.364	0	0	.097	-.097	0	0
83			3	.371	0	0	0	0	0	0
84			4	.379	0	0	-.096	.096	0	0
85			5	.387	0	0	-.192	.192	0	0
86	2	M18	1	.2	0	0	-.158	.158	0	0
87			2	.208	0	0	-.079	.079	0	0
88			3	.216	0	0	0	0	0	0
89			4	.223	0	0	.078	-.078	0	0
90			5	.231	0	0	.157	-.157	0	0
91	2	M19	1	.182	0	0	-.169	.169	0	0
92			2	.19	0	0	-.085	.085	0	0
93			3	.197	0	0	-.002	.002	0	0
94			4	.205	0	0	.082	-.082	0	0
95			5	.213	0	0	.165	-.165	0	0
96	2	M20	1	.15	0	0	-.008	.008	0	0
97			2	.158	0	0	-.001	.001	0	0
98			3	.165	0	0	.005	-.005	0	0
99			4	.173	0	0	.011	-.011	0	0
100			5	.181	0	0	.017	-.017	0	0
101	2	M21	1	.337	0	0	.056	-.056	0	0
102			2	.329	0	0	.021	-.021	0	0
103			3	.321	0	0	-.013	.013	0	0
104			4	.314	0	0	-.047	.047	0	0
105			5	.306	0	0	-.081	.081	0	0
106	2	M22	1	-.037	0	0	.066	-.066	0	0
107			2	-.044	0	0	.029	-.029	0	0
108			3	-.052	0	0	-.008	.008	0	0
109			4	-.06	0	0	-.045	.045	0	0
110			5	-.067	0	0	-.081	.081	0	0
111	2	M23	1	.025	0	0	.113	-.113	0	0
112			2	.017	0	0	.065	-.065	0	0
113			3	.01	0	0	.017	-.017	0	0
114			4	.002	0	0	-.032	.032	0	0
115			5	-.006	0	0	-.08	.08	0	0
116	2	M24	1	.7	0	0	.051	-.051	0	0
117			2	.693	0	0	.042	-.042	0	0
118			3	.685	0	0	.032	-.032	0	0
119			4	.677	0	0	.022	-.022	0	0
120			5	.67	0	0	.012	-.012	0	0
121	2	M25	1	.002	.157	0	0	0	0	0
122			2	.002	.079	0	1.604	-1.604	0	0
123			3	.002	.001	0	2.149	-2.149	0	0
124			4	.002	-.077	0	1.637	-1.637	0	0
125			5	.002	-.691	0	-2.496	2.496	0	0
126	2	M26	1	-.002	.069	0	-2.394	2.394	0	0
127			2	-.002	.033	0	-2.073	2.073	0	0
128			3	-.002	-.003	0	-1.98	1.98	0	0
129			4	-.002	-.039	0	-2.114	2.114	0	0

Company : JVA Consulting Engineers, Inc.
Designer : Kari Rogne
Job Number :
Solar D. Cargo Front Wall

Aug 5, 2007
3:57 PM
Checked By:_____

Member Section Stresses (Continued)

	LC	Member Label	Sec	Axial[ksi]	y Shear[ksi]	z Shear[ksi]	y top Bending[ksi]	y bot Bend..	z top Bend..	z bot Bend...
130			5	-.002	-.076	0	-2.475	2.475	0	0
131	2	M27	1	.002	.37	0	-2.583	2.583	0	0
132			2	.002	.306	0	1.166	-1.166	0	0
133			3	.002	-.208	0	3.88	-3.88	0	0
134			4	.002	-.272	0	1.216	-1.216	0	0
135			5	.002	-.33	0	-2.155	2.155	0	0
136	2	M28	1	0	.034	0	-2.096	2.096	0	0
137			2	0	.169	0	-1.726	1.726	0	0
138			3	0	.122	0	-.587	.587	0	0
139			4	0	-.073	0	-.099	.099	0	0
140			5	0	-.055	0	-.428	.428	0	0

Hot Rolled Steel Design Parameters

	Label	Shape	Length[...	Lbyy[ft]	Lbzz[ft]	Lcomp top...	Lcomp bot...	Kyy	Kzz	Cm-yy	Cm-zz	Cb	y sway	z sway
1	M1	UPPER T...	3.2	0	0	0								
2	M2	UPPER T...	11.6	0	0	0								
3	M3	6x1x.25	39.5	0	0	0	0							
4	M4	HSS4X4X4	9											
5	M5	HSS4X4X4	9											
6	M6	HSS	9											
7	M7	HSS	9											
8	M8	HSS	9											
9	M9	HSS	9											
10	M10	HSS	9											
11	M11	1x1/16	9											
12	M12	1x1/16	9											
13	M13	HSS	9											
14	M14	1x1/16	9											
15	M15	1x1/16	9											
16	M16	1x1/16	9											
17	M17	1x1/16	9											
18	M18	1x1/16	9											
19	M19	1x1/16	9											
20	M20	1x1/16	9											
21	M21	1x1/16	9											
22	M22	1x1/16	9											
23	M23	1x1/16	9											
24	M24	1x1/16	9											
25	M25	Header	8.63		0	0								
26	M26	Header	4		0	0								
27	M27	Header	7.07		0	0								
28	M28	Header	5		0	0								

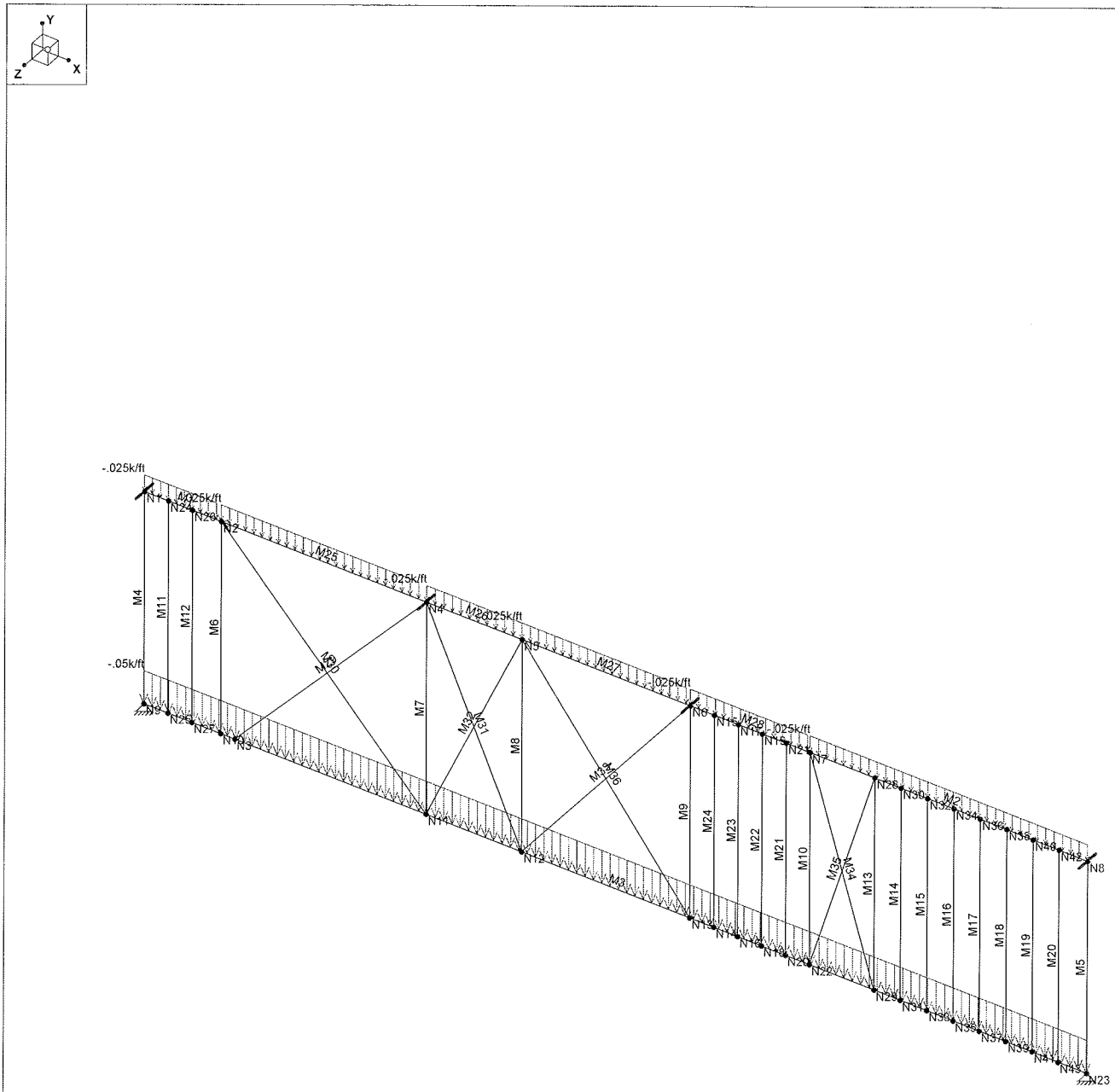

Loads: LC 1, Dead
Results for LC 1, Dead

JVA Consulting Engineers,...	Solar D. Cargo Front Wall shipping	
Kari Rogne		Aug 5, 2007 at 4:45 PM
		Container Front Wall Shipping Con...

Company : JVA Consulting Engineers, Inc.
Designer : Kari Rogne
Job Number :
Solar D. Cargo Front Wall shipping

Aug 5, 2007
4:48 PM
Checked By:_____

Joint Coordinates and Temperatures

	Label	X [ft]	Y [ft]	Z [ft]	Temp [F]	Detach From Di...
1	N1	0	0	0	0	
2	N2	3.2	0	0	0	
3	N3	3.8	-9	0	0	
4	N4	11.83	0	0	0	
5	N5	15.83	0	0	0	
6	N6	22.9	0	0	0	
7	N7	27.9	0	0	0	
8	N8	39.5	0	0	0	
9	N9	0	-9	0	0	
10	N10	3.2	-9	0	0	
11	N11	11.83	-9	0	0	
12	N12	15.83	-9	0	0	
13	N13	22.9	-9	0	0	
14	N14	23.9	-9	0	0	
15	N15	23.9	0	0	0	
16	N16	24.9	-9	0	0	
17	N17	24.9	0	0	0	
18	N18	25.9	-9	0	0	
19	N19	25.9	0	0	0	
20	N20	26.9	-9	0	0	
21	N21	26.9	0	0	0	
22	N22	27.9	-9	0	0	
23	N23	39.5	-9	0	0	
24	N24	1	0	0	0	
25	N25	1	-9	0	0	
26	N26	2	0	0	0	
27	N27	2	-9	0	0	
28	N28	30.6	0	0	0	
29	N29	30.6	-9	0	0	
30	N30	31.7	0	0	0	
31	N31	31.7	-9	0	0	
32	N32	32.8	0	0	0	
33	N33	32.8	-9	0	0	
34	N34	33.9	0	0	0	
35	N35	33.9	-9	0	0	
36	N36	35	0	0	0	
37	N37	35	-9	0	0	
38	N38	36.1	0	0	0	
39	N39	36.1	-9	0	0	
40	N40	37.2	0	0	0	
41	N41	37.2	-9	0	0	
42	N42	38.3	0	0	0	
43	N43	38.3	-9	0	0	

Hot Rolled Steel Section Sets

	Label	Shape	Type	Design List	Material	Design Rules	A [in2]	Iyy [in4]	Izz [in4]	J [in4]
1	Header	HSS8X2X4	Beam	Rectangula...	A36	Typical	4.295	2.936	28.431	9.346
2	HSS	HSS2X2X4	Column	Tube	A36	Typical	1.505	.744	.744	1.31
3	UPPER TUBE	HSS2X2X4	Beam	Tube	A36	Typical	1.505	.744	.744	1.31
4	Corner Colu...	L6X6X5	Column	Single Angle	A36	Typical	3.65	13	13	.129
5	Cross Brace	L2X2X2	HBrace	Channel	A36	Typical	.484	.19	.19	.003

Member Primary Data

	Label	I Joint	J Joint	K Joint	Rotate(deg)	Section/Shape	Type	Design List	Material	Design Rules
1	M1	N1	N2			UPPER TUBE	Beam	Tube	A36	Typical
2	M2	N7	N8			UPPER TUBE	Beam	Tube	A36	Typical
3	M3	N9	N23			6x1x.25	Beam	None	A992	Typical
4	M4	N1	N9			Corner Column	Column	Single An...	A36	Typical
5	M5	N23	N8			Corner Column	Column	Single An...	A36	Typical
6	M6	N2	N10			HSS	Column	Tube	A36	Typical
7	M7	N4	N11			HSS	Column	Tube	A36	Typical
8	M8	N5	N12			HSS	Column	Tube	A36	Typical
9	M9	N6	N13			HSS	Column	Tube	A36	Typical
10	M10	N7	N22			HSS	Column	Tube	A36	Typical
11	M11	N24	N25			1x1/16	Column	None	A992	Typical
12	M12	N26	N27			1x1/16	Column	None	A992	Typical
13	M13	N28	N29			HSS	Column	Tube	A36	Typical
14	M14	N30	N31			1x1/16	Column	None	A992	Typical
15	M15	N32	N33			1x1/16	Column	None	A992	Typical
16	M16	N34	N35			1x1/16	Column	None	A992	Typical
17	M17	N36	N37			1x1/16	Column	None	A992	Typical
18	M18	N38	N39			1x1/16	Column	None	A992	Typical
19	M19	N40	N41			1x1/16	Column	None	A992	Typical
20	M20	N42	N43			1x1/16	Column	None	A992	Typical
21	M21	N21	N20			1x1/16	Column	None	A992	Typical
22	M22	N19	N18			1x1/16	Column	None	A992	Typical
23	M23	N17	N16			1x1/16	Column	None	A992	Typical
24	M24	N15	N14			1x1/16	Column	None	A992	Typical
25	M25	N2	N4			Header	Beam	Rectangul...	A36	Typical
26	M26	N4	N5			Header	Beam	Rectangul...	A36	Typical
27	M27	N5	N6			Header	Beam	Rectangul...	A36	Typical
28	M28	N6	N7			Header	Beam	Rectangul...	A36	Typical
29	M29	N4	N3			Cross Brace	HBrace	Channel	A36	Typical
30	M30	N2	N11			Cross Brace	HBrace	Channel	A36	Typical
31	M31	N4	N12			Cross Brace	HBrace	Channel	A36	Typical
32	M32	N5	N11			Cross Brace	HBrace	Channel	A36	Typical
33	M33	N6	N12			Cross Brace	HBrace	Channel	A36	Typical
34	M34	N7	N29			Cross Brace	HBrace	Channel	A36	Typical
35	M35	N28	N22			Cross Brace	HBrace	Channel	A36	Typical
36	M36	N5	N13			Cross Brace	HBrace	Channel	A36	Typical

Member Distributed Loads (BLC 1 : Dead Load)

	Member Label	Direction	Start Magnitude[k/ft,d...	End Magnitude[k/ft,d...	Start Location[ft,%]	End Location[ft,%]
1	M1	Y	-.025	-.025	0	3
2	M2	Y	-.025	-.025	0	13.58
3	M3	Y	-.05	-.05	0	39.5
4	M25	Y	-.025	-.025	0	8.3
5	M26	Y	-.025	-.025	0	5
6	M27	Y	-.025	-.025	0	6.9
7	M28	Y	-.025	-.025	0	4.9

Joint Reactions

	LC	Joint Label	X [k]	Y [k]	Z [k]	MX [k-ft]	MY [k-ft]	MZ [k-ft]
1	1	N6	0	0	-.004	0	0	0
2	1	N4	0	0	.002	0	0	0
3	1	N1	0	0	-.005	0	0	0
4	1	N8	0	0	.006	0	0	0
5	1	N9	1.551	2.422	.005	0	0	0

Joint Reactions (Continued)

	LC	Joint Label	X [k]	Y [k]	Z [k]	MX [k-ft]	MY [k-ft]	MZ [k-ft]
6	1	N23	-1.551	2.487	-.005	0	0	0
7	1	Totals:	0	4.909	0			
8	1	COG (ft):	X: 20.012	Y: -5.472	Z: 0			

Member Section Deflections

	LC	Member Label	Sec	x [in]	y [in]	z [in]	x Rotate[rad]	(n) L/y Ratio	(n) L/z Ratio
1	1	M1	1	.176	-.001	0	1.209e-4	NC	NC
2			2	.176	-.043	.003	1.867e-4	932.028	NC
3			3	.176	-.099	.006	2.848e-4	392.567	NC
4			4	.176	-.155	.009	4.106e-4	250.035	NC
5			5	.176	-.205	.01	5.533e-4	188.98	NC
6	1	M2	1	.171	-.669	.013	1.339e-3	NC	NC
7			2	.169	-.701	.02	1.122e-3	699.541	NC
8			3	.169	-.529	.021	6.916e-4	720.061	9139.948
9			4	.168	-.243	.015	2.42e-4	1872.766	NC
10			5	.167	-.002	0	1.117e-4	NC	NC
11	1	M3	1	0	0	0	1.71e-3	NC	NC
12			2	0	-.38	-.104	1.305e-3	1246.614	4541.697
13			3	0	-.567	-.164	1.662e-3	836.062	2885.449
14			4	0	-.702	-.172	2.123e-3	675.269	2762.914
15			5	0	0	0	3.583e-3	NC	NC
16	1	M4	1	.001	-.176	0	3.562e-4	NC	NC
17			2	0	-.142	.001	-5.76e-5	NC	NC
18			3	0	-.114	.002	-4.714e-4	4100.261	NC
19			4	0	-.074	.002	-8.853e-4	3587.653	NC
20			5	0	0	0	-1.299e-3	NC	NC
21	1	M5	1	0	0	0	-2.09e-3	NC	NC
22			2	0	.021	-.003	-1.45e-3	5045.372	NC
23			3	-.001	-.027	-.003	-8.113e-4	3952.955	NC
24			4	-.002	-.104	-.002	-1.721e-4	1036.335	NC
25			5	-.002	-.167	0	4.671e-4	645.537	NC
26	1	M6	1	.205	-.176	-.01	7.728e-5	NC	NC
27			2	.204	-.104	0	-1.722e-4	3896.09	NC
28			3	.203	-.091	.006	-4.217e-4	NC	6764.347
29			4	.202	-.076	.018	-6.712e-4	3367.087	3868.048
30			5	.201	0	.045	-9.207e-4	NC	1953.456
31	1	M7	1	.401	-.174	0	-9.014e-5	615.64	NC
32			2	.401	-.127	.027	-2.077e-4	841.496	4013.999
33			3	.401	-.08	.055	-3.253e-4	1340.412	1956.505
34			4	.401	-.035	.085	-4.429e-4	2969.285	1263.976
35			5	.401	0	.118	-5.605e-4	NC	913.711
36	1	M8	1	.481	-.174	.003	-4.794e-5	NC	NC
37			2	.481	-.13	.035	-1.505e-4	NC	3405.644
38			3	.481	-.089	.069	-2.53e-4	NC	1639.992
39			4	.481	-.047	.105	-3.556e-4	NC	1058.965
40			5	.481	0	.143	-4.581e-4	NC	773.253
41	1	M9	1	.615	-.172	0	1.373e-4	628.995	NC
42			2	.616	-.133	.038	5.443e-5	812.05	2836.097
43			3	.616	-.085	.081	-2.846e-5	1273.569	1337.866
44			4	.616	-.037	.127	-1.114e-4	2908.671	850.171
45			5	.616	0	.176	-1.943e-4	NC	613.282
46	1	M10	1	.669	-.171	-.013	2.494e-4	NC	NC
47			2	.67	-.138	.028	2.362e-4	NC	2682.243
48			3	.671	-.093	.075	2.23e-4	NC	1239.341
49			4	.672	-.044	.126	2.098e-4	NC	781.152
50			5	.673	0	.179	1.966e-4	NC	564.765

Member Section Deflections (Continued)

	LC	Member Label	Sec	x [in]	y [in]	z [in]	x Rotate[rad]	(n) L/y Ratio	(n) L/z Ratio
51	1	M11	1	.057	-.176	-.004	3.298e-4	612.651	NC
52			2	.058	-.087	-.006	-6.844e-5	1240.333	NC
53			3	.059	-.081	-.013	-4.667e-4	1332.649	5690.141
54			4	.06	-.078	-.011	-8.65e-4	1374.75	5009.308
55			5	.061	0	.015	-1.263e-3	NC	NC
56	1	M12	1	.127	-.176	-.008	2.449e-4	612.587	NC
57			2	.127	-.088	-.004	-1.034e-4	1223.886	NC
58			3	.127	-.083	-.005	-4.517e-4	1300.013	NC
59			4	.127	-.08	.003	-8.e-4	1342.517	NC
60			5	.127	0	.03	-1.148e-3	NC	2856.303
61	1	M13	1	.705	-.169	-.019	1.636e-4	639.856	NC
62			2	.704	-.149	.015	3.044e-4	730.369	3088.113
63			3	.702	-.079	.058	4.451e-4	1382.871	1392.349
64			4	.701	-.012	.108	5.859e-4	9412.435	848.137
65			5	.7	0	.164	7.267e-4	NC	587.459
66	1	M14	1	.668	-.169	-.021	8.954e-5	NC	NC
67			2	.667	-.186	.01	3.044e-4	1823.403	3518.705
68			3	.667	-.089	.048	5.192e-4	NC	1558.753
69			4	.667	.01	.096	7.34e-4	2045.099	924.3
70			5	.666	0	.153	9.488e-4	NC	619.138
71	1	M15	1	.601	-.169	-.022	7.418e-6	641.46	NC
72			2	.601	-.202	.004	2.968e-4	535.264	4241.392
73			3	.601	-.085	.037	5.862e-4	1283.543	1839.985
74			4	.601	.033	.081	8.755e-4	3227.255	1050.003
75			5	.601	0	.139	1.165e-3	NC	670.375
76	1	M16	1	.511	-.169	-.021	-8.336e-5	642.224	NC
77			2	.511	-.217	-.002	2.814e-4	499.228	5577.662
78			3	.511	-.084	.025	6.462e-4	1291.519	2356.7
79			4	.511	.048	.064	1.011e-3	2210.443	1265.701
80			5	.511	0	.123	1.376e-3	NC	751.023
81	1	M17	1	.406	-.168	-.02	-1.81e-4	642.953	NC
82			2	.406	-.226	-.007	2.59e-4	479.63	8621.618
83			3	.406	-.084	.011	6.989e-4	1292.721	3511.424
84			4	.406	.057	.045	1.139e-3	1866.488	1681.287
85			5	.406	0	.103	1.579e-3	NC	881.546
86	1	M18	1	.294	-.168	-.016	-2.804e-4	643.643	NC
87			2	.294	-.227	-.011	2.316e-4	476.321	NC
88			3	.294	-.083	-.003	7.436e-4	1302.64	7902.175
89			4	.294	.06	.023	1.256e-3	1787.297	2723.47
90			5	.294	0	.081	1.768e-3	NC	1109.909
91	1	M19	1	.183	-.168	-.012	-3.724e-4	NC	NC
92			2	.183	-.225	-.014	2.032e-4	1089.254	NC
93			3	.183	-.086	-.017	7.789e-4	NC	NC
94			4	.183	.054	0	1.355e-3	1121.642	9111.536
95			5	.183	0	.056	1.93e-3	NC	1577.27
96	1	M20	1	.076	-.168	-.007	-4.425e-4	NC	NC
97			2	.078	-.228	-.016	1.801e-4	1051.791	5760.196
98			3	.08	-.101	-.032	8.026e-4	6435.869	2499.079
99			4	.081	.036	-.025	1.425e-3	1393.359	2344.029
100			5	.083	0	.03	2.048e-3	NC	NC
101	1	M21	1	.659	-.171	-.01	2.411e-4	NC	NC
102			2	.659	-.137	.031	1.991e-4	NC	2688.181
103			3	.659	-.088	.077	1.571e-4	NC	1244.738
104			4	.659	-.038	.128	1.152e-4	NC	785.825
105			5	.659	0	.18	7.318e-5	NC	568.862
106	1	M22	1	.649	-.171	-.007	2.252e-4	NC	NC
107			2	.649	-.136	.033	1.627e-4	NC	2709.758

Company : JVA Consulting Engineers, Inc.
Designer : Kari Rogne
Job Number : Solar D. Cargo Front Wall shipping

Aug 5, 2007
4:48 PM
Checked By:_____

Member Section Deflections (Continued)

	LC	Member Label	Sec	x [in]	y [in]	z [in]	x Rotate[rad]	(n) L/y Ratio	(n) L/z Ratio
108			3	.649	-.086	.079	1.003e-4	NC	1259.385
109			4	.649	-.036	.129	3.779e-5	NC	796.445
110			5	.648	0	.181	-2.469e-5	NC	576.625
111	1	M23	1	.639	-.171	-.004	2.023e-4	631.382	NC
112			2	.639	-.136	.035	1.267e-4	798.517	2743.646
113			3	.639	-.085	.08	5.102e-5	1268.787	1281.072
114			4	.639	-.036	.129	-2.462e-5	3068.738	811.56
115			5	.639	0	.18	-1.003e-4	NC	587.158
116	1	M24	1	.628	-.172	-.002	1.729e-4	630.187	NC
117			2	.628	-.135	.037	9.062e-5	803.171	2786.766
118			3	.628	-.085	.081	8.368e-6	1269.258	1307.867
119			4	.628	-.036	.128	-7.389e-5	2999.08	829.891
120			5	.628	0	.178	-1.561e-4	NC	599.65
121	1	M25	1	.176	-.205	.01	5.533e-4	NC	NC
122			2	.176	-.258	.008	6.594e-4	NC	NC
123			3	.175	-.309	.005	7.656e-4	NC	NC
124			4	.175	-.356	.002	8.717e-4	NC	NC
125			5	.174	-.401	0	9.778e-4	NC	NC
126	1	M26	1	.174	-.401	0	9.778e-4	NC	NC
127			2	.174	-.421	-.001	1.014e-3	2391.884	NC
128			3	.174	-.441	-.002	1.051e-3	1196.419	NC
129			4	.174	-.461	-.003	1.087e-3	795.874	NC
130			5	.174	-.481	-.003	1.124e-3	593.469	NC
131	1	M27	1	.174	-.481	-.003	1.124e-3	NC	NC
132			2	.173	-.519	-.004	1.172e-3	NC	NC
133			3	.173	-.555	-.004	1.219e-3	NC	NC
134			4	.172	-.588	-.002	1.267e-3	NC	NC
135			5	.172	-.615	0	1.315e-3	NC	NC
136	1	M28	1	.172	-.615	0	1.315e-3	NC	NC
137			2	.172	-.631	.002	1.327e-3	NC	NC
138			3	.171	-.644	.005	1.336e-3	NC	NC
139			4	.171	-.657	.009	1.34e-3	NC	6802.798
140			5	.171	-.669	.013	1.339e-3	NC	4798.98
141	1	M29	1	.183	-.397	0	-7.182e-4	NC	NC
142			2	.181	-.367	.028	-9.324e-4	4719.069	9386.086
143			3	.179	-.342	.056	-1.147e-3	2202.407	4848.82
144			4	.177	-.276	.068	-1.361e-3	2380.593	4930.651
145			5	.174	-.155	.051	-1.575e-3	NC	NC
146	1	M30	1	.269	-.015	.01	4.387e-4	NC	NC
147			2	.274	-.163	.029	4.471e-4	1813.155	8078.396
148			3	.279	-.242	.001	4.554e-4	1565.566	NC
149			4	.284	-.265	-.054	4.638e-4	2855.536	2329.66
150			5	.289	-.278	-.118	4.721e-4	NC	1165.629
151	1	M31	1	.437	-.003	0	3.147e-4	NC	NC
152			2	.438	-.057	-.03	2.755e-4	NC	3926.093
153			3	.438	-.106	-.066	2.362e-4	NC	1803.161
154			4	.439	-.15	-.104	1.969e-4	NC	1136.75
155			5	.439	-.196	-.143	1.577e-4	NC	826.353
156	1	M32	1	.369	-.354	.003	-5.003e-4	615.028	NC
157			2	.369	-.305	.03	-6.319e-4	826.741	4406.12
158			3	.368	-.255	.057	-7.635e-4	1268.531	2214.858
159			4	.367	-.205	.085	-8.95e-4	2754.226	1442.534
160			5	.367	-.162	.118	-1.027e-3	NC	1029.073
161	1	M33	1	.378	-.515	0	-7.041e-4	NC	NC
162			2	.378	-.481	.045	-8.373e-4	6624.38	NC
163			3	.378	-.437	.085	-9.704e-4	4456.088	NC
164			4	.378	-.372	.117	-1.104e-3	6814.988	NC

Member Section Deflections (Continued)

	LC	Member Label	Sec	x [in]	y [in]	z [in]	x Rotate[rad]	(n) L/y Ratio	(n) L/z Ratio
165			5	.379	-.297	.143	-1.237e-3	NC	NC
166	1	M34	1	.69	-.029	.013	6.237e-4	NC	NC
167			2	.685	-.082	-.022	8.007e-4	NC	3305.993
168			3	.681	-.153	-.048	9.777e-4	2909.034	1855.818
169			4	.676	-.204	-.089	1.155e-3	2426.522	1113.71
170			5	.671	-.201	-.164	1.332e-3	NC	637.573
171	1	M35	1	.626	-.365	-.019	-1.734e-4	NC	NC
172			2	.631	-.353	.041	-2.242e-4	3628.916	NC
173			3	.635	-.307	.087	-2.751e-4	4162.204	NC
174			4	.64	-.245	.129	-3.26e-4	NC	NC
175			5	.645	-.194	.179	-3.768e-4	NC	NC
176	1	M36	1	.486	-.161	-.003	6.567e-4	NC	NC
177			2	.485	-.235	-.034	7.411e-4	7050.689	4469.39
178			3	.485	-.304	-.071	8.256e-4	4180.068	2022.524
179			4	.485	-.35	-.118	9.101e-4	5615.12	1201.398
180			5	.485	-.38	-.176	9.945e-4	NC	795.014

Member Section Stresses

	LC	Member Label	Sec	Axial[ksi]	y Shear[ksi]	z Shear[ksi]	y top Bending[ksi]	y bot Bend..	z top Bend..	z bot Bend...
1	1	M1	1	.263	1.32	-.012	-19.616	19.616	.03	-.03
2			2	.263	1.294	-.012	-3.935	3.935	-.12	.12
3			3	.27	.109	-.011	.281	-.281	-.221	.221
4			4	.277	.273	-.009	1.846	-1.846	-.311	.311
5			5	.277	.252	-.009	4.974	-4.974	-.418	.418
6	1	M2	1	1.119	.312	-.002	-4.247	4.247	-.028	.028
7			2	.634	-.448	0	9.772	-9.772	-.162	.162
8			3	.613	-.169	0	2.4	-2.4	-.197	.197
9			4	.565	-.134	.004	-.485	.485	-.206	.206
10			5	.534	-2.212	.011	-38.762	38.762	.046	-.046
11	1	M3	1	.317	.361	.016	-5.914	5.914	-.042	.016
12			2	.146	-.204	0	.309	-.309	.084	-.031
13			3	-.254	.014	.002	1.275	-1.275	.114	-.042
14			4	-.04	1.018	.004	10.049	-10.049	.547	-.204
15			5	.205	-.106	-.015	-12.15	12.15	-.065	.024
16	1	M4	1	.336	.254	-.004	-2.042	2.042	-4.088	4.519
17			2	.344	.254	-.004	-.507	.507	-1.163	1.286
18			3	.352	.254	-.004	1.027	-1.027	1.761	-1.947
19			4	.359	.254	-.004	2.561	-2.561	4.685	-5.18
20			5	.367	.254	-.004	4.096	-4.096	7.61	-8.412
21	1	M5	1	.594	.514	-.01	-8.411	8.411	-15.641	17.29
22			2	.587	.514	-.01	-5.292	5.292	-9.727	10.752
23			3	.579	.514	-.01	-2.173	2.173	-3.812	4.215
24			4	.571	.514	-.01	.947	-.947	2.102	-2.323
25			5	.564	.514	-.01	4.066	-4.066	8.016	-8.861
26	1	M6	1	.839	.07	.011	-4.7	4.7	-.529	.529
27			2	.847	.07	.011	-2.321	2.321	-.149	.149
28			3	.854	.07	.011	.058	-.058	.232	-.232
29			4	.862	.07	.011	2.436	-2.436	.613	-.613
30			5	.87	.07	.011	4.815	-4.815	.994	-.994
31	1	M7	1	-.113	-.005	0	.197	-.197	.033	-.033
32			2	-.106	-.005	0	.027	-.027	.055	-.055
33			3	-.098	-.005	0	-.142	.142	.078	-.078
34			4	-.09	-.005	0	-.311	.311	.1	-.1
35			5	-.083	-.005	0	-.481	.481	.122	-.122
36	1	M8	1	.084	.005	0	-.306	.306	.114	-.114
37			2	.091	.005	0	-.128	.128	.097	-.097

Member Section Stresses (Continued)

	LC	Member Label	Sec	Axial[ksi]	y Shear[ksi]	z Shear[ksi]	y top Bending[ksi]	y bot Bend..	z top Bend..	z bot Bend..
38			3	.099	.005	0	.05	-.05	.079	-.079
39			4	.107	.005	0	.228	-.228	.062	-.062
40			5	.114	.005	0	.407	-.407	.044	-.044
41	1	M9	1	-.177	-.012	-.001	.776	-.776	.217	-.217
42			2	-.169	-.012	-.001	.378	-.378	.182	-.182
43			3	-.162	-.012	-.001	-.021	.021	.146	-.146
44			4	-.154	-.012	-.001	-.419	.419	.11	-.11
45			5	-.146	-.012	-.001	-.818	.818	.074	-.074
46	1	M10	1	-1.108	-.01	-.003	.843	-.843	.358	-.358
47			2	-1.1	-.01	-.003	.492	-.492	.263	-.263
48			3	-1.093	-.01	-.003	.142	-.142	.169	-.169
49			4	-1.085	-.01	-.003	-.209	.209	.074	-.074
50			5	-1.078	-.01	-.003	-.559	.559	-.021	.021
51	1	M11	1	-1.078	.015	.003	-3.238	3.238	-.394	.394
52			2	-1.07	.015	.003	-1.654	1.654	-.103	.103
53			3	-1.062	.015	.003	-.071	.071	.189	-.189
54			4	-1.055	.015	.003	1.513	-1.513	.48	-.48
55			5	-1.047	.015	.003	3.097	-3.097	.772	-.772
56	1	M12	1	.177	.015	.002	-3.247	3.247	-.309	.309
57			2	.184	.015	.002	-1.649	1.649	-.075	.075
58			3	.192	.015	.002	-.05	.05	.159	-.159
59			4	.199	.015	.002	1.548	-1.548	.393	-.393
60			5	.207	.015	.002	3.146	-3.146	.627	-.627
61	1	M13	1	1.07	-.061	0	4.012	-4.012	.321	-.321
62			2	1.077	-.061	0	1.943	-1.943	.303	-.303
63			3	1.085	-.061	0	-.125	.125	.286	-.286
64			4	1.093	-.061	0	-2.194	2.194	.268	-.268
65			5	1.1	-.061	0	-4.263	4.263	.25	-.25
66	1	M14	1	.381	-.021	0	4.5	-4.5	.136	-.136
67			2	.389	-.021	0	2.271	-2.271	.157	-.157
68			3	.396	-.021	0	.043	-.043	.178	-.178
69			4	.404	-.021	0	-2.186	2.186	.2	-.2
70			5	.412	-.021	0	-4.414	4.414	.221	-.221
71	1	M15	1	-.034	-.028	0	6.009	-6.009	.092	-.092
72			2	-.027	-.028	0	3.004	-3.004	.155	-.155
73			3	-.019	-.028	0	0	0	.217	-.217
74			4	-.011	-.028	0	-3.005	3.005	.28	-.28
75			5	-.004	-.028	0	-6.009	6.009	.343	-.343
76	1	M16	1	0	-.033	.001	7.2	-7.2	.023	-.023
77			2	.008	-.033	.001	3.598	-3.598	.141	-.141
78			3	.015	-.033	.001	-.005	.005	.259	-.259
79			4	.023	-.033	.001	-3.607	3.607	.377	-.377
80			5	.031	-.033	.001	-7.209	7.209	.495	-.495
81	1	M17	1	.019	-.037	.002	7.914	-7.914	-.076	.076
82			2	.027	-.037	.002	3.955	-3.955	.113	-.113
83			3	.035	-.037	.002	-.004	.004	.303	-.303
84			4	.042	-.037	.002	-3.964	3.964	.493	-.493
85			5	.05	-.037	.002	-7.923	7.923	.683	-.683
86	1	M18	1	.1	-.037	.003	8.076	-8.076	-.216	.216
87			2	.108	-.037	.003	4.033	-4.033	.066	-.066
88			3	.115	-.037	.003	-.01	.01	.348	-.348
89			4	.123	-.037	.003	-4.053	4.053	.63	-.63
90			5	.131	-.037	.003	-8.096	8.096	.912	-.912
91	1	M19	1	.108	-.036	.004	7.794	-7.794	-.405	.405
92			2	.116	-.036	.004	3.906	-3.906	-.007	.007
93			3	.124	-.036	.004	.019	-.019	.391	-.391
94			4	.131	-.036	.004	-3.868	3.868	.789	-.789

Member Section Stresses (Continued)

	LC	Member Label	Sec	Axial[ksi]	y Shear[ksi]	z Shear[ksi]	y top Bending[ksi]	y bot Bend..	z top Bend..	z bot Bend..
95			5	.139	-.036	.004	-7.756	7.756	1.187	-1.187
96	1	M20	1	-1.953	-.033	.005	7.335	-7.335	-.657	.657
97			2	-1.945	-.033	.005	3.751	-3.751	-.114	.114
98			3	-1.938	-.033	.005	.167	-.167	.43	-.43
99			4	-1.93	-.033	.005	-3.417	3.417	.973	-.973
100			5	-1.923	-.033	.005	-7.001	7.001	1.517	-1.517
101	1	M21	1	-.058	-.002	0	.547	-.547	.174	-.174
102			2	-.051	-.002	0	.286	-.286	.128	-.128
103			3	-.043	-.002	0	.025	-.025	.081	-.081
104			4	-.035	-.002	0	-.236	.236	.035	-.035
105			5	-.028	-.002	0	-.497	.497	-.012	.012
106	1	M22	1	.159	-.003	0	.593	-.593	.162	-.162
107			2	.167	-.003	0	.297	-.297	.12	-.12
108			3	.174	-.003	0	.002	-.002	.078	-.078
109			4	.182	-.003	0	-.293	.293	.037	-.037
110			5	.19	-.003	0	-.589	.589	-.005	.005
111	1	M23	1	.1	-.003	0	.574	-.574	.146	-.146
112			2	.108	-.003	0	.285	-.285	.111	-.111
113			3	.116	-.003	0	-.004	.004	.076	-.076
114			4	.123	-.003	0	-.293	.293	.042	-.042
115			5	.131	-.003	0	-.582	.582	.007	-.007
116	1	M24	1	-.006	-.002	0	.502	-.502	.127	-.127
117			2	.002	-.002	0	.248	-.248	.101	-.101
118			3	.009	-.002	0	-.006	.006	.074	-.074
119			4	.017	-.002	0	-.26	.26	.048	-.048
120			5	.025	-.002	0	-.514	.514	.021	-.021
121	1	M25	1	.406	.048	0	0	0	0	0
122			2	.406	.025	0	.491	-.491	.002	-.002
123			3	.406	.002	0	.671	-.671	.003	-.003
124			4	.406	-.021	0	.539	-.539	.005	-.005
125			5	.406	-.042	0	.099	-.099	.007	-.007
126	1	M26	1	.558	-.004	0	.077	-.077	.023	-.023
127			2	.558	-.015	0	.018	-.018	.024	-.024
128			3	.558	-.025	0	-.107	.107	.025	-.025
129			4	.558	-.036	0	-.299	.299	.027	-.027
130			5	.558	-.047	0	-.558	.558	.028	-.028
131	1	M27	1	.571	.088	0	-.576	.576	.053	-.053
132			2	.571	.07	0	.301	-.301	.058	-.058
133			3	.571	.051	0	.97	-.97	.063	-.063
134			4	.571	.032	0	1.43	-1.43	.069	-.069
135			5	.571	.014	0	1.682	-1.682	.074	-.074
136	1	M28	1	.556	-.078	-.004	1.751	-1.751	.094	-.094
137			2	.555	-.093	-.004	1.092	-1.092	.075	-.075
138			3	.555	-.08	-.005	.405	-.405	.055	-.055
139			4	.554	-.05	-.005	-.059	.059	.034	-.034
140			5	.554	-.079	-.005	-.591	.591	.01	-.01
141	1	M29	1	1.649	.049	-.008	-2.408	.905	.417	-.157
142			2	1.657	.033	-.008	-.065	.024	-.032	.012
143			3	1.665	.017	-.008	1.363	-.512	-.481	.181
144			4	1.672	0	-.008	1.875	-.705	-.929	.349
145			5	1.68	-.015	-.008	1.472	-.553	-1.378	.518
146	1	M30	1	-3.77	.019	.009	1.56	-.586	-1.949	.732
147			2	-3.763	.002	.009	2.178	-.819	-1.389	.522
148			3	-3.755	-.015	.009	1.779	-.669	-.83	.312
149			4	-3.747	-.032	.009	.363	-.136	-.271	.102
150			5	-3.74	-.049	.009	-2.07	.778	.289	-.108
151	1	M31	1	-.624	.012	.002	-.095	.036	-.371	.14

Member Section Stresses (Continued)

	LC	Member Label	Sec	Axial[ksi]	y Shear[ksi]	z Shear[ksi]	y top Bending[ksi]	y bot Bend..	z top Bend..	z bot Bend...
152			2	-.617	.004	.002	.277	-.104	-.258	.097
153			3	-.609	-.004	.002	.277	-.104	-.144	.054
154			4	-.601	-.012	.002	-.096	.036	-.03	.011
155			5	-.594	-.02	.002	-.841	.316	.083	-.031
156	1	M32	1	.648	.012	.002	-.308	.116	-.126	.047
157			2	.656	.004	.002	.059	-.022	-.014	.005
158			3	.663	-.004	.002	.054	-.02	.098	-.037
159			4	.671	-.012	.002	-.324	.122	.21	-.079
160			5	.679	-.02	.002	-1.073	.403	.322	-.121
161	1	M33	1	-.198	.028	0	-.682	.256	-.18	.068
162			2	-.19	.014	0	.444	-.167	-.207	.078
163			3	-.182	0	0	.806	-.303	-.233	.088
164			4	-.175	-.014	0	.403	-.151	-.26	.098
165			5	-.167	-.028	0	-.765	.287	-.286	.108
166	1	M34	1	4.86	.053	-.025	-3.183	1.196	1.525	-.573
167			2	4.868	.048	-.025	-.918	.345	.395	-.149
168			3	4.875	.042	-.025	1.108	-.416	-.734	.276
169			4	4.883	.037	-.025	2.894	-1.088	-1.863	.7
170			5	4.891	.032	-.025	4.44	-1.669	-2.993	1.125
171	1	M35	1	-4.809	-.016	.012	2.721	-1.023	-1.311	.493
172			2	-4.801	-.021	.012	1.88	-.706	-.751	.282
173			3	-4.794	-.027	.012	.799	-.3	-.19	.071
174			4	-4.786	-.032	.012	-.522	.196	.371	-.139
175			5	-4.778	-.037	.012	-2.083	.783	.931	-.35
176	1	M36	1	.249	.031	-.002	-1.043	.392	-.131	.049
177			2	.257	.017	-.002	.282	-.106	-.231	.087
178			3	.264	.003	-.002	.842	-.317	-.33	.124
179			4	.272	-.011	-.002	.638	-.24	-.43	.162
180			5	.28	-.025	-.002	-.331	.124	-.53	.199

Member AISC ASD Steel Code Checks (By Combination)

	LC	Member	Shape	UC Max	Loc[ft]	Shear UC	Loc[ft]	Dir	Fa[ksi]	Ft[ksi]	Fby[ksi]	Fbz[ksi]	Cb	Cmy	Cmz	Eqn
1	1	M1	HSS2X2X4	.839	0	.097	1	y	21.6	21.6	23.76	23.76	2.036	.572	.85	H1-2
2	1	M2	HSS2X2X4	1.658	11.6	.155	11.6	y	21.6	21.6	23.76	23.76	1.639	.354	.85	H1-2
3	1	M3	6x1x.25	.608	30.859	.196	38.266	y	30	30	37.5	30	1	.859	.85	H1-2
4	1	M4	L6X6X5	.029	9	.021	0	y	12.507	21.6	- Code..					
5	1	M5	L6X6X5	.048	0	.041	0	y	12.507	21.6	- Code..					
6	1	M6	HSS2X2X4	.285	9	.011	0	y	6.331	21.6	23.76	23.76	2.3	.387	.21	H1-2
7	1	M7	HSS2X2X4	.032	9	.003	0	y	6.331	21.6	21.6	21.6	2.23	.708	.436	H2-1
8	1	M8	HSS2X2X4	.026	9	.003	0	y	6.331	21.6	21.6	21.6	2.3	.755	.299	H1-2
9	1	M9	HSS2X2X4	.050	0	.003	0	y	6.331	21.6	23.76	23.76	2.3	.736	.22	H2-1
10	1	M10	HSS2X2X4	.107	0	.001	0	y	6.331	21.6	21.6	21.6	2.3	.577	.335	H2-1
11	1	M11	1x1/16	.152	9	.006	0	y	1.067	30	33	33	2.3	.396	.217	H2-1
12	1	M12	1x1/16	.229	9	.006	0	y	1.067	30	33	33	2.3	.403	.212	H1-1
13	1	M13	HSS2X2X4	.241	9	.008	0	y	6.331	21.6	23.76	23.76	2.3	.912	.224	H1-2
14	1	M14	1x1/16	.440	9	.004	0	y	1.067	30	33	33	2.3	.846	.208	H1-1
15	1	M15	1x1/16	.193	9	.005	0	y	1.067	30	33	33	2.3	.707	.2	H2-1
16	1	M16	1x1/16	.234	9	.007	0	y	1.067	30	33	33	2.3	.619	.201	H1-2
17	1	M17	1x1/16	.262	9	.008	0	y	1.067	30	33	33	2.3	.555	.2	H1-2
18	1	M18	1x1/16	.277	9	.009	0	y	1.067	30	33	33	2.3	.505	.201	H1-2
19	1	M19	1x1/16	.276	9	.010	0	y	1.067	30	33	33	2.3	.463	.202	H1-2
20	1	M20	1x1/16	.322	9	.010	0	y	1.067	30	33	33	2.3	.427	.218	H2-1
21	1	M21	1x1/16	.024	0	.001	0	y	1.067	30	33	33	2.3	.573	.236	H2-1
22	1	M22	1x1/16	.182	9	.001	0	y	1.067	30	33	33	2.3	.588	.203	H1-1
23	1	M23	1x1/16	.127	9	.001	0	y	1.067	30	33	33	2.3	.619	.206	H1-1
24	1	M24	1x1/16	.027	9	.001	0	y	1.067	30	33	33	2.3	.667	.209	H1-1

Company : JVA Consulting Engineers, Inc.
Designer : Kari Rogne
Job Number : Solar D. Cargo Front Wall shipping

Aug 5, 2007
4:48 PM
Checked By:_____

Member AISC ASD Steel Code Checks (By Combination) (Continued)

	LC	Member	Shape	UC Max	Loc[ft]	Shear UC	Loc[ft]	Dir	Fa[ksi]	Ft[ksi]	Fby[ksi]	Fbz[ksi]	Cb	Cmy	Cmz	Eqn
25	1	M25	HSS8X2X4	.071	4.495	.008	0	y	9.517	21.6	23.76	23.76	1	.6	1	H1-1
26	1	M26	HSS8X2X4	.053	4	.007	4	y	17.615	21.6	23.76	23.76	1.9	.925	.85	H1-1
27	1	M27	HSS8X2X4	.108	7.07	.009	0	y	12.644	21.6	23.76	23.76	2.145	.887	.85	H1-1
28	1	M28	HSS8X2X4	.103	0	.008	1.979	y	16.161	21.6	23.76	23.76	2.139	.643	.85	H1-2
29	1	M29	L2X2X2	.085	12.062	.004	0	y	19.675	21.6	- Code..					
30	1	M30	L2X2X2	.175	0	.003	12.469	y	1.057	21.6	- Code..					
31	1	M31	L2X2X2	.029	0	.002	9.849	y	19.675	21.6	- Code..					
32	1	M32	L2X2X2	.034	9.849	.002	9.849	y	19.675	21.6	- Code..					
33	1	M33	L2X2X2	.009	0	.002	11.445	y	19.675	21.6	- Code..					
34	1	M34	L2X2X2	.249	9.396	.004	0	y	19.675	21.6	- Code..					
35	1	M35	L2X2X2	.223	0	.003	9.396	y	1.861	21.6	- Code..					
36	1	M36	L2X2X2	.014	11.445	.002	0	y	19.675	21.6	- Code..					

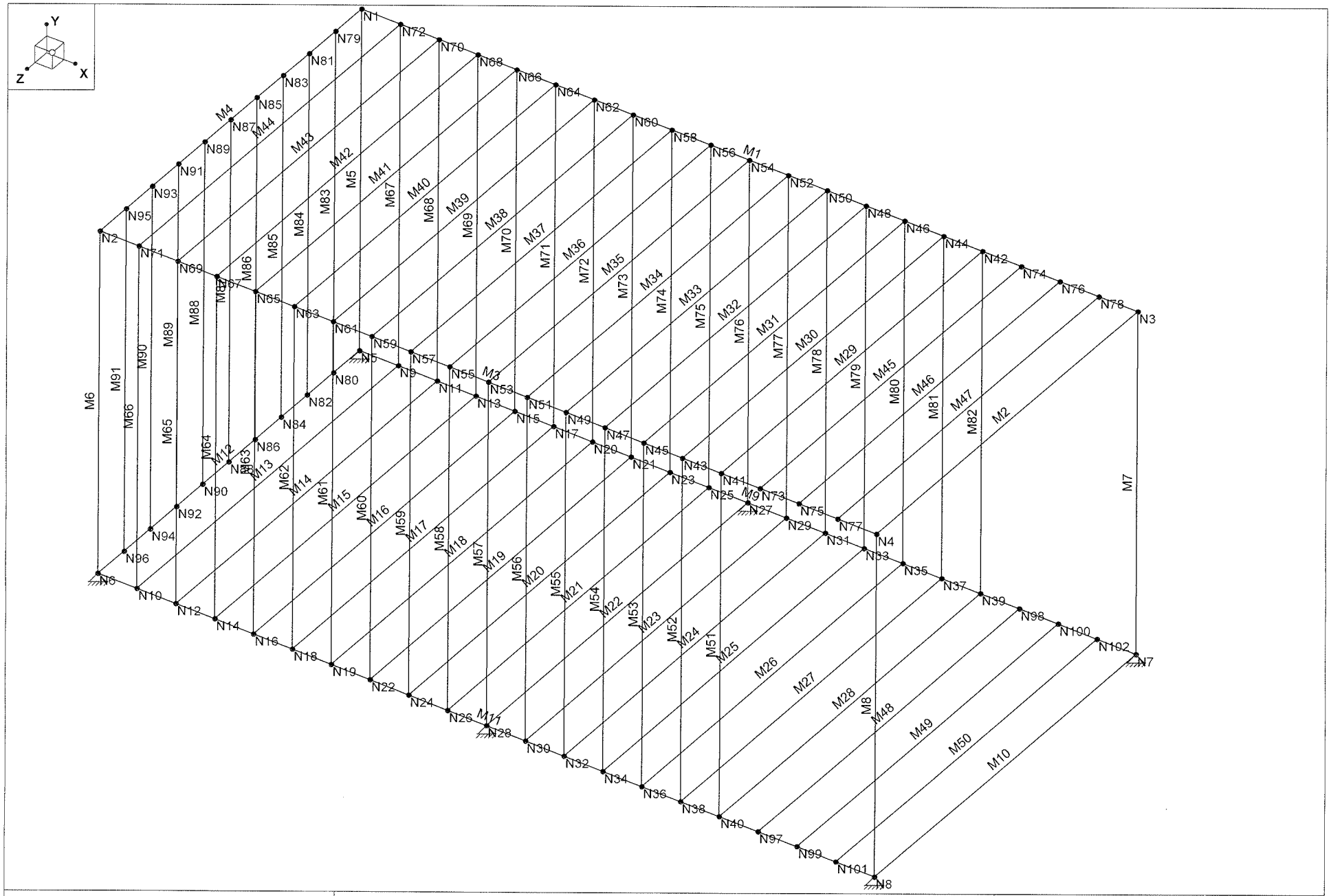

JVA Consulting Engineers, Inc.	Solar D. Garage in place	
Kari Rogne		Aug 5, 2007 at 3:28 PM
		S C Garage In Place.r3d

CU 309

CU 309

Company : JVA Consulting Engineers, Inc.
Designer : Kari Rogne
Job Number :
Solar D. Garage in place

Aug 5, 2007
6:45 PM
Checked By:_____

Joint Coordinates and Temperatures

	Label	X [ft]	Y [ft]	Z [ft]	Temp [F]	Detach From Di...
1	N1	0	0	0	0	
2	N2	0	0	10	0	
3	N3	20	0	0	0	
4	N4	20	0	10	0	
5	N5	0	-9	0	0	
6	N6	0	-9	10	0	
7	N7	20	-9	0	0	
8	N8	20	-9	10	0	
9	N9	1	-9	0	0	
10	N10	1	-9	10	0	
11	N11	2	-9	0	0	
12	N12	2	-9	10	0	
13	N13	3	-9	0	0	
14	N14	3	-9	10	0	
15	N15	4	-9	0	0	
16	N16	4	-9	10	0	
17	N17	5	-9	0	0	
18	N18	5	-9	10	0	
19	N19	6	-9	10	0	
20	N20	6	-9	0	0	
21	N21	7	-9	0	0	
22	N22	7	-9	10	0	
23	N23	8	-9	0	0	
24	N24	8	-9	10	0	
25	N25	9	-9	0	0	
26	N26	9	-9	10	0	
27	N27	10	-9	0	0	
28	N28	10	-9	10	0	
29	N29	11	-9	0	0	
30	N30	11	-9	10	0	
31	N31	12	-9	0	0	
32	N32	12	-9	10	0	
33	N33	13	-9	0	0	
34	N34	13	-9	10	0	
35	N35	14	-9	0	0	
36	N36	14	-9	10	0	
37	N37	15	-9	0	0	
38	N38	15	-9	10	0	
39	N39	16	-9	0	0	
40	N40	16	-9	10	0	
41	N41	16	0	10	0	
42	N42	16	0	0	0	
43	N43	15	0	10	0	
44	N44	15	0	0	0	
45	N45	14	0	10	0	
46	N46	14	0	0	0	
47	N47	13	0	10	0	
48	N48	13	0	0	0	
49	N49	12	0	10	0	
50	N50	12	0	0	0	
51	N51	11	0	10	0	
52	N52	11	0	0	0	
53	N53	10	0	10	0	
54	N54	10	0	0	0	
55	N55	9	0	10	0	
56	N56	9	0	0	0	

Joint Coordinates and Temperatures (Continued)

	Label	X [ft]	Y [ft]	Z [ft]	Temp [F]	Detach From Di...
57	N57	8	0	10	0	
58	N58	8	0	0	0	
59	N59	7	0	10	0	
60	N60	7	0	0	0	
61	N61	6	0	10	0	
62	N62	6	0	0	0	
63	N63	5	0	10	0	
64	N64	5	0	0	0	
65	N65	4	0	10	0	
66	N66	4	0	0	0	
67	N67	3	0	10	0	
68	N68	3	0	0	0	
69	N69	2	0	10	0	
70	N70	2	0	0	0	
71	N71	1	0	10	0	
72	N72	1	0	0	0	
73	N73	17	0	10	0	
74	N74	17	0	0	0	
75	N75	18	0	10	0	
76	N76	18	0	0	0	
77	N77	19	0	10	0	
78	N78	19	0	0	0	
79	N79	0	0	1	0	
80	N80	0	-9	1	0	
81	N81	0	0	2	0	
82	N82	0	-9	2	0	
83	N83	0	0	3	0	
84	N84	0	-9	3	0	
85	N85	0	0	4	0	
86	N86	0	-9	4	0	
87	N87	0	0	5	0	
88	N88	0	-9	5	0	
89	N89	0	0	6	0	
90	N90	0	-9	6	0	
91	N91	0	0	7	0	
92	N92	0	-9	7	0	
93	N93	0	0	8	0	
94	N94	0	-9	8	0	
95	N95	0	0	9	0	
96	N96	0	-9	9	0	
97	N97	17	-9	10	0	
98	N98	17	-9	0	0	
99	N99	18	-9	10	0	
100	N100	18	-9	0	0	
101	N101	19	-9	10	0	
102	N102	19	-9	0	0	

Hot Rolled Steel Section Sets

	Label	Shape	Type	Design List	Material	Design Rules	A [in2]	Iyy [in4]	Izz [in4]	J [in4]
1	Opening Col...	HSS2X2X2	Column	Channel	A36	Typical	.841	.487	.487	.797
2	Corrugation	1x1/16	Column	Rectangula...	A36	Typical	1	.083	.083	.141
3	Corner Colu...	L6X6X5	Column	Single Angle	A36	Typical	3.65	13	13	.129
4	Cross Brace	L3X2X3	VBrace	Channel	A36	Typical	.902	.307	.842	.012
5	Floor Beam	MC6X12	Beam	Channel	A36	Typical	3.53	1.87	18.7	.15
6	Grider Floor	MC6X15.1	Beam	Channel	A36	Typical	4.44	3.51	25	.29
7	UPPER TUBE	HSS2X2X4	Beam	Channel	A36	Typical	1.505	.744	.744	1.31

Company : JVA Consulting Engineers, Inc.
Designer : Kari Rogne
Job Number :
Solar D. Garage in place

Aug 5, 2007
6:45 PM
Checked By:_____

Member Primary Data

	Label	I Joint	J Joint	K Joint	Rotate(deg)	Section/Shape	Type	Design List	Material	Design Rules
1	M1	N1	N3			UPPER TUBE	Beam	Channel	A36	Typical
2	M2	N4	N3			UPPER TUBE	Beam	Channel	A36	Typical
3	M3	N4	N2			UPPER TUBE	Beam	Channel	A36	Typical
4	M4	N1	N2			UPPER TUBE	Beam	Channel	A36	Typical
5	M5	N1	N5		180	Corner Column	Column	Single An...	A36	Typical
6	M6	N2	N6		90	Corner Column	Column	Single An...	A36	Typical
7	M7	N3	N7		270	Corner Column	Column	Single An...	A36	Typical
8	M8	N4	N8			Corner Column	Column	Single An...	A36	Typical
9	M9	N5	N7			Grider Floor	Beam	Channel	A36	Typical
10	M10	N8	N7			Floor Beam	Beam	Channel	A36	Typical
11	M11	N8	N6			Grider Floor	Beam	Channel	A36	Typical
12	M12	N5	N6			Floor Beam	Beam	Channel	A36	Typical
13	M13	N9	N10			Floor Beam	Beam	Channel	A36	Typical
14	M14	N11	N12			Floor Beam	Beam	Channel	A36	Typical
15	M15	N13	N14			Floor Beam	Beam	Channel	A36	Typical
16	M16	N15	N16			Floor Beam	Beam	Channel	A36	Typical
17	M17	N17	N18			Floor Beam	Beam	Channel	A36	Typical
18	M18	N19	N20			Floor Beam	Beam	Channel	A36	Typical
19	M19	N21	N22			Floor Beam	Beam	Channel	A36	Typical
20	M20	N23	N24			Floor Beam	Beam	Channel	A36	Typical
21	M21	N25	N26			Floor Beam	Beam	Channel	A36	Typical
22	M22	N27	N28			Floor Beam	Beam	Channel	A36	Typical
23	M23	N29	N30			Floor Beam	Beam	Channel	A36	Typical
24	M24	N31	N32			Floor Beam	Beam	Channel	A36	Typical
25	M25	N33	N34			Floor Beam	Beam	Channel	A36	Typical
26	M26	N35	N36			Floor Beam	Beam	Channel	A36	Typical
27	M27	N37	N38			Floor Beam	Beam	Channel	A36	Typical
28	M28	N39	N40			Floor Beam	Beam	Channel	A36	Typical
29	M29	N41	N42			Floor Beam	Beam	Channel	A36	Typical
30	M30	N43	N44			Floor Beam	Beam	Channel	A36	Typical
31	M31	N45	N46			Floor Beam	Beam	Channel	A36	Typical
32	M32	N47	N48			Floor Beam	Beam	Channel	A36	Typical
33	M33	N49	N50			Floor Beam	Beam	Channel	A36	Typical
34	M34	N51	N52			Floor Beam	Beam	Channel	A36	Typical
35	M35	N53	N54			Floor Beam	Beam	Channel	A36	Typical
36	M36	N55	N56			Floor Beam	Beam	Channel	A36	Typical
37	M37	N57	N58			Floor Beam	Beam	Channel	A36	Typical
38	M38	N59	N60			Floor Beam	Beam	Channel	A36	Typical
39	M39	N61	N62			Floor Beam	Beam	Channel	A36	Typical
40	M40	N63	N64			Floor Beam	Beam	Channel	A36	Typical
41	M41	N65	N66			Floor Beam	Beam	Channel	A36	Typical
42	M42	N67	N68			Floor Beam	Beam	Channel	A36	Typical
43	M43	N69	N70			Floor Beam	Beam	Channel	A36	Typical
44	M44	N71	N72			Floor Beam	Beam	Channel	A36	Typical
45	M45	N73	N74			Floor Beam	Beam	Channel	A36	Typical
46	M46	N75	N76			Floor Beam	Beam	Channel	A36	Typical
47	M47	N77	N78			Floor Beam	Beam	Channel	A36	Typical
48	M48	N97	N98			Floor Beam	Beam	Channel	A36	Typical
49	M49	N99	N100			Floor Beam	Beam	Channel	A36	Typical
50	M50	N101	N102			Floor Beam	Beam	Channel	A36	Typical
51	M51	N40	N41			Opening Colu...	Column	Channel	A36	Typical
52	M52	N38	N43			Corrugation	Column	Rectangul...	A36	Typical
53	M53	N36	N45			Corrugation	Column	Rectangul...	A36	Typical
54	M54	N34	N47			Corrugation	Column	Rectangul...	A36	Typical
55	M55	N32	N49			Corrugation	Column	Rectangul...	A36	Typical
56	M56	N30	N51			Corrugation	Column	Rectangul...	A36	Typical

Member Primary Data (Continued)

	Label	I Joint	J Joint	K Joint	Rotate(deg)	Section/Shape	Type	Design List	Material	Design Rules
57	M57	N28	N53			Corrugation	Column	Rectangul...	A36	Typical
58	M58	N26	N55			Corrugation	Column	Rectangul...	A36	Typical
59	M59	N24	N57			Corrugation	Column	Rectangul...	A36	Typical
60	M60	N22	N59			Corrugation	Column	Rectangul...	A36	Typical
61	M61	N19	N61			Corrugation	Column	Rectangul...	A36	Typical
62	M62	N18	N63			Corrugation	Column	Rectangul...	A36	Typical
63	M63	N16	N65			Corrugation	Column	Rectangul...	A36	Typical
64	M64	N14	N67			Corrugation	Column	Rectangul...	A36	Typical
65	M65	N12	N69			Corrugation	Column	Rectangul...	A36	Typical
66	M66	N10	N71			Corrugation	Column	Rectangul...	A36	Typical
67	M67	N9	N72			Corrugation	Column	Rectangul...	A36	Typical
68	M68	N11	N70			Corrugation	Column	Rectangul...	A36	Typical
69	M69	N13	N68			Corrugation	Column	Rectangul...	A36	Typical
70	M70	N15	N66			Corrugation	Column	Rectangul...	A36	Typical
71	M71	N17	N64			Corrugation	Column	Rectangul...	A36	Typical
72	M72	N20	N62			Corrugation	Column	Rectangul...	A36	Typical
73	M73	N21	N60			Corrugation	Column	Rectangul...	A36	Typical
74	M74	N23	N58			Corrugation	Column	Rectangul...	A36	Typical
75	M75	N25	N56			Corrugation	Column	Rectangul...	A36	Typical
76	M76	N27	N54			Corrugation	Column	Rectangul...	A36	Typical
77	M77	N29	N52			Corrugation	Column	Rectangul...	A36	Typical
78	M78	N31	N50			Corrugation	Column	Rectangul...	A36	Typical
79	M79	N33	N48			Corrugation	Column	Rectangul...	A36	Typical
80	M80	N35	N46			Corrugation	Column	Rectangul...	A36	Typical
81	M81	N37	N44			Corrugation	Column	Rectangul...	A36	Typical
82	M82	N39	N42			Opening Colu...	Column	Channel	A36	Typical
83	M83	N79	N80			Corrugation	Column	Rectangul...	A36	Typical
84	M84	N81	N82			Corrugation	Column	Rectangul...	A36	Typical
85	M85	N83	N84			Corrugation	Column	Rectangul...	A36	Typical
86	M86	N85	N86			Corrugation	Column	Rectangul...	A36	Typical
87	M87	N87	N88			Corrugation	Column	Rectangul...	A36	Typical
88	M88	N89	N90			Corrugation	Column	Rectangul...	A36	Typical
89	M89	N91	N92			Corrugation	Column	Rectangul...	A36	Typical
90	M90	N93	N94			Corrugation	Column	Rectangul...	A36	Typical
91	M91	N95	N96			Corrugation	Column	Rectangul...	A36	Typical

Member Distributed Loads (BLC 1 : Dead Load)

	Member Label	Direction	Start Magnitude[k/ft,d...	End Magnitude[k/ft,d...	Start Location[ft,%]	End Location[ft,%]
1	M12	Y	-.022	-.022	0	0
2	M13	Y	-.022	-.022	0	0
3	M14	Y	-.022	-.022	0	0
4	M15	Y	-.022	-.022	0	0
5	M16	Y	-.022	-.022	0	0
6	M17	Y	-.022	-.022	0	0
7	M18	Y	-.022	-.022	0	0
8	M19	Y	-.022	-.022	0	0
9	M20	Y	-.022	-.022	0	0
10	M21	Y	-.2	-.2	0	0
11	M22	Y	-.2	-.2	0	0
12	M23	Y	-.2	-.2	0	0
13	M24	Y	-.04	-.04	0	0
14	M25	Y	-.04	-.04	0	0
15	M26	Y	-.04	-.04	0	0
16	M27	Y	-.04	-.04	0	0
17	M28	Y	-.02	-.02	0	0
18	M48	Y	-.01	-.01	0	0

Member Distributed Loads (BLC 1 : Dead Load) (Continued)

	Member Label	Direction	Start Magnitude[k/ft,d...	End Magnitude[k/ft,d...	Start Location[ft,%]	End Location[ft,%]
19	M49	Y	-.01	-.01	0	0
20	M50	Y	-.01	-.01	0	0
21	M10	Y	-.01	-.01	0	0

Joint Reactions (By Combination)

	LC	Joint Label	X [k]	Y [k]	Z [k]	MX [k-ft]	MY [k-ft]	MZ [k-ft]
1	1	N5	.142	2.247	.039	0	0	0
2	1	N7	-.143	1.799	-.006	0	0	0
3	1	N8	-.143	1.799	.006	0	0	0
4	1	N6	.142	2.247	-.039	0	0	0
5	1	N28	.002	9.146	-.006	0	0	0
6	1	N27	.002	9.146	.006	0	0	0
7	1	Totals:	0	26.384	0			
8	1	COG (ft):	X: 9.661	Y: -7.242	Z: 5			

Member Section Deflections

	LC	Member Label	Sec	x [in]	y [in]	z [in]	x Rotate[rad]	(n) L/y Ratio	(n) L/z Ratio
1	1	M1	1	-.002	0	0	2.142e-4	NC	NC
2			2	-.002	-.044	0	1.947e-4	5485.45	NC
3			3	-.002	-.002	0	1.807e-4	NC	NC
4			4	-.002	-.054	0	1.917e-4	4489.041	NC
5			5	-.002	0	0	1.059e-4	NC	NC
6	1	M2	1	0	0	-.002	4.329e-5	NC	NC
7			2	0	-.012	-.002	4.329e-5	NC	NC
8			3	0	-.02	-.002	4.329e-5	6252.187	NC
9			4	0	-.012	-.002	4.329e-5	NC	NC
10			5	0	0	-.002	4.329e-5	NC	NC
11	1	M3	1	.002	0	0	1.059e-4	NC	NC
12			2	.002	-.054	0	1.917e-4	4489.039	NC
13			3	.002	-.002	0	1.807e-4	NC	NC
14			4	.002	-.044	0	1.947e-4	5485.452	NC
15			5	.002	0	0	2.142e-4	NC	NC
16	1	M4	1	0	0	.002	-1.241e-4	NC	NC
17			2	0	-.021	.001	-3.468e-5	6054.948	NC
18			3	0	-.029	.001	-1.886e-5	4192.261	NC
19			4	0	-.021	.001	-3.468e-5	6054.948	NC
20			5	0	0	.002	-1.241e-4	NC	NC
21	1	M5	1	0	-.002	0	-9.266e-6	NC	NC
22			2	0	.002	-.002	-6.678e-6	NC	NC
23			3	0	.008	-.001	-4.09e-6	NC	NC
24			4	0	.01	0	-1.501e-6	NC	NC
25			5	0	0	0	1.087e-6	NC	NC
26	1	M6	1	0	0	-.002	9.265e-6	NC	NC
27			2	0	-.002	.002	6.677e-6	NC	NC
28			3	0	-.001	.008	4.089e-6	NC	NC
29			4	0	0	.01	1.501e-6	NC	NC
30			5	0	0	0	-1.087e-6	NC	NC
31	1	M7	1	0	0	.002	-7.691e-7	NC	NC
32			2	0	-.003	.008	-5.769e-7	NC	NC
33			3	0	-.005	.015	-3.847e-7	NC	7892.439
34			4	0	-.004	.015	-1.926e-7	NC	7715.133
35			5	0	0	0	0	NC	NC
36	1	M8	1	0	.002	0	7.676e-7	NC	NC
37			2	0	.008	-.003	5.758e-7	NC	NC
38			3	0	.015	-.005	3.84e-7	7892.467	NC

Company : JVA Consulting Engineers, Inc.
Designer : Kari Rogne
Job Number :
Solar D. Garage in place

Aug 5, 2007
6:45 PM
Checked By:_____

Member Section Deflections (Continued)

	LC	Member Label	Sec	x [in]	y [in]	z [in]	x Rotate[rad]	(n) L/y Ratio	(n) L/z Ratio
39			4	0	.015	-.004	1.922e-7	7715.155	NC
40			5	0	0	0	0	NC	NC
41	1	M9	1	0	0	0	7.034e-4	NC	NC
42			2	0	-.044	0	5.58e-4	5451.161	NC
43			3	0	0	0	3.478e-3	NC	NC
44			4	0	-.054	0	8.429e-4	4476.306	NC
45			5	0	0	0	5.254e-4	NC	NC
46	1	M10	1	0	0	0	-1.22e-3	NC	NC
47			2	0	-.013	0	-1.22e-3	8979.567	NC
48			3	0	-.019	0	-1.22e-3	6485.371	NC
49			4	0	-.013	0	-1.22e-3	8979.568	NC
50			5	0	0	0	-1.22e-3	NC	NC
51	1	M11	1	0	0	0	5.254e-4	NC	NC
52			2	0	-.054	0	8.429e-4	4476.304	NC
53			3	0	0	0	3.478e-3	NC	NC
54			4	0	-.044	0	5.58e-4	5451.163	NC
55			5	0	0	0	7.034e-4	NC	NC
56	1	M12	1	0	0	0	-1.104e-3	NC	NC
57			2	0	-.02	0	-1.896e-4	5870.367	NC
58			3	0	-.029	0	-4.713e-5	4097.514	NC
59			4	0	-.02	0	-1.896e-4	5870.367	NC
60			5	0	0	0	-1.104e-3	NC	NC
61	1	M13	1	0	-.015	0	-1.156e-3	NC	NC
62			2	0	-.03	0	-1.156e-3	7979.924	NC
63			3	0	-.036	0	-1.156e-3	5684.866	NC
64			4	0	-.03	0	-1.156e-3	7979.924	NC
65			5	0	-.015	0	-1.156e-3	NC	NC
66	1	M14	1	0	-.028	0	-9.92e-4	NC	NC
67			2	0	-.043	0	-9.92e-4	8032.754	NC
68			3	0	-.049	0	-9.92e-4	5720.603	NC
69			4	0	-.043	0	-9.92e-4	8032.754	NC
70			5	0	-.028	0	-9.92e-4	NC	NC
71	1	M15	1	0	-.039	0	-6.51e-4	NC	NC
72			2	0	-.054	0	-6.51e-4	8034.405	NC
73			3	0	-.06	0	-6.51e-4	5721.719	NC
74			4	0	-.054	0	-6.51e-4	8034.405	NC
75			5	0	-.039	0	-6.51e-4	NC	NC
76	1	M16	1	0	-.044	0	-2.127e-4	NC	NC
77			2	0	-.059	0	-2.127e-4	8034.454	NC
78			3	0	-.065	0	-2.127e-4	5721.753	NC
79			4	0	-.059	0	-2.127e-4	8034.455	NC
80			5	0	-.044	0	-2.127e-4	NC	NC
81	1	M17	1	0	-.044	0	2.417e-4	NC	NC
82			2	0	-.059	0	2.417e-4	8034.424	NC
83			3	0	-.065	0	2.417e-4	5721.732	NC
84			4	0	-.059	0	2.417e-4	8034.424	NC
85			5	0	-.044	0	2.417e-4	NC	NC
86	1	M18	1	0	-.038	0	-6.327e-4	NC	NC
87			2	0	-.053	0	-6.327e-4	8033.408	NC
88			3	0	-.059	0	-6.327e-4	5721.045	NC
89			4	0	-.053	0	-6.327e-4	8033.408	NC
90			5	0	-.038	0	-6.327e-4	NC	NC
91	1	M19	1	0	-.028	0	8.809e-4	NC	NC
92			2	0	-.043	0	8.809e-4	8001.049	NC
93			3	0	-.049	0	8.809e-4	5699.159	NC
94			4	0	-.043	0	8.809e-4	8001.049	NC
95			5	0	-.028	0	8.809e-4	NC	NC

Company : JVA Consulting Engineers, Inc.
Designer : Kari Rogne
Job Number : Solar D. Garage in place

Aug 5, 2007
6:45 PM
Checked By:_____

Member Section Deflections (Continued)

	LC	Member Label	Sec	x [in]	y [in]	z [in]	x Rotate[rad]	(n) L/y Ratio	(n) L/z Ratio
96	1	M20	1	0	-.017	0	9.058e-4	NC	NC
97			2	0	-.033	0	9.058e-4	7087.818	NC
98			3	0	-.04	0	9.058e-4	5077.796	NC
99			4	0	-.033	0	9.058e-4	7087.818	NC
100			5	0	-.017	0	9.058e-4	NC	NC
101	1	M21	1	0	-.006	0	6.27e-4	NC	NC
102			2	0	-.097	0	6.27e-4	1315.523	NC
103			3	0	-.134	0	6.27e-4	935.878	NC
104			4	0	-.097	0	6.27e-4	1315.523	NC
105			5	0	-.006	0	6.27e-4	NC	NC
106	1	M22	1	0	0	0	-1.633e-4	NC	NC
107			2	0	-.093	0	-1.633e-4	1288.983	NC
108			3	0	-.131	0	-1.633e-4	917.95	NC
109			4	0	-.093	0	-1.633e-4	1288.983	NC
110			5	0	0	0	-1.633e-4	NC	NC
111	1	M23	1	0	-.01	0	-9.294e-4	NC	NC
112			2	0	-.101	0	-9.294e-4	1312.623	NC
113			3	0	-.138	0	-9.294e-4	933.92	NC
114			4	0	-.101	0	-9.294e-4	1312.623	NC
115			5	0	-.01	0	-9.294e-4	NC	NC
116	1	M24	1	0	-.024	0	-1.135e-3	NC	NC
117			2	0	-.049	0	-1.135e-3	4869.219	NC
118			3	0	-.058	0	-1.135e-3	3480.485	NC
119			4	0	-.049	0	-1.135e-3	4869.219	NC
120			5	0	-.024	0	-1.135e-3	NC	NC
121	1	M25	1	0	-.038	0	-1.001e-3	NC	NC
122			2	0	-.061	0	-1.001e-3	5238.486	NC
123			3	0	-.07	0	-1.001e-3	3731.151	NC
124			4	0	-.061	0	-1.001e-3	5238.486	NC
125			5	0	-.038	0	-1.001e-3	NC	NC
126	1	M26	1	0	-.049	0	-6.337e-4	NC	NC
127			2	0	-.071	0	-6.337e-4	5252.641	NC
128			3	0	-.081	0	-6.337e-4	3740.725	NC
129			4	0	-.071	0	-6.337e-4	5252.641	NC
130			5	0	-.049	0	-6.337e-4	NC	NC
131	1	M27	1	0	-.054	0	-1.379e-4	NC	NC
132			2	0	-.076	0	-1.379e-4	5308.381	NC
133			3	0	-.085	0	-1.379e-4	3778.398	NC
134			4	0	-.076	0	-1.379e-4	5308.381	NC
135			5	0	-.054	0	-1.379e-4	NC	NC
136	1	M28	1	0	-.052	0	3.828e-4	NC	NC
137			2	0	-.066	0	3.828e-4	8836.685	NC
138			3	0	-.071	0	3.828e-4	6281.912	NC
139			4	0	-.066	0	3.828e-4	8836.685	NC
140			5	0	-.052	0	3.828e-4	NC	NC
141	1	M29	1	0	-.053	-.002	-3.073e-4	NC	NC
142			2	0	-.058	-.002	-3.073e-4	NC	NC
143			3	0	-.06	-.002	-3.073e-4	NC	NC
144			4	0	-.058	-.002	-3.073e-4	NC	NC
145			5	0	-.053	-.002	-3.073e-4	NC	NC
146	1	M30	1	0	-.054	-.002	1.507e-4	NC	NC
147			2	0	-.059	-.002	1.507e-4	NC	NC
148			3	0	-.061	-.002	1.507e-4	NC	NC
149			4	0	-.059	-.002	1.507e-4	NC	NC
150			5	0	-.054	-.002	1.507e-4	NC	NC
151	1	M31	1	0	-.049	-.002	6.584e-4	NC	NC
152			2	0	-.054	-.002	6.584e-4	NC	NC

Company : JVA Consulting Engineers, Inc.
Designer : Kari Rogne
Job Number :
Solar D. Garage in place

Aug 5, 2007
6:45 PM
Checked By:_____

Member Section Deflections (Continued)

	LC	Member Label	Sec	x [in]	y [in]	z [in]	x Rotate[rad]	(n) L/y Ratio	(n) L/z Ratio
153			3	0	-.056	-.002	6.584e-4	NC	NC
154			4	0	-.054	-.002	6.584e-4	NC	NC
155			5	0	-.049	-.002	6.584e-4	NC	NC
156	1	M32	1	0	-.038	-.002	1.056e-3	NC	NC
157			2	0	-.044	-.002	1.056e-3	NC	NC
158			3	0	-.046	-.002	1.056e-3	NC	NC
159			4	0	-.044	-.002	1.056e-3	NC	NC
160			5	0	-.038	-.002	1.056e-3	NC	NC
161	1	M33	1	0	-.024	-.002	1.229e-3	NC	NC
162			2	0	-.029	-.002	1.229e-3	NC	NC
163			3	0	-.032	-.002	1.229e-3	NC	NC
164			4	0	-.029	-.002	1.229e-3	NC	NC
165			5	0	-.024	-.002	1.229e-3	NC	NC
166	1	M34	1	0	-.01	-.002	1.044e-3	NC	NC
167			2	0	-.015	-.002	1.044e-3	NC	NC
168			3	0	-.017	-.002	1.044e-3	NC	NC
169			4	0	-.015	-.002	1.044e-3	NC	NC
170			5	0	-.01	-.002	1.044e-3	NC	NC
171	1	M35	1	0	-.002	-.002	1.686e-4	NC	NC
172			2	0	-.006	-.002	1.686e-4	NC	NC
173			3	0	-.008	-.002	1.686e-4	NC	NC
174			4	0	-.006	-.002	1.686e-4	NC	NC
175			5	0	-.002	-.002	1.686e-4	NC	NC
176	1	M36	1	0	-.006	-.002	-7.309e-4	NC	NC
177			2	0	-.011	-.002	-7.309e-4	NC	NC
178			3	0	-.013	-.002	-7.309e-4	NC	NC
179			4	0	-.011	-.002	-7.309e-4	NC	NC
180			5	0	-.006	-.002	-7.309e-4	NC	NC
181	1	M37	1	0	-.017	-.002	-9.919e-4	NC	NC
182			2	0	-.022	-.002	-9.919e-4	NC	NC
183			3	0	-.024	-.002	-9.919e-4	NC	NC
184			4	0	-.022	-.002	-9.919e-4	NC	NC
185			5	0	-.017	-.002	-9.919e-4	NC	NC
186	1	M38	1	0	-.029	-.002	-9.339e-4	NC	NC
187			2	0	-.034	-.002	-9.339e-4	NC	NC
188			3	0	-.036	-.002	-9.339e-4	NC	NC
189			4	0	-.034	-.002	-9.339e-4	NC	NC
190			5	0	-.029	-.002	-9.339e-4	NC	NC
191	1	M39	1	0	-.039	-.002	-6.655e-4	NC	NC
192			2	0	-.044	-.002	-6.655e-4	NC	NC
193			3	0	-.046	-.002	-6.655e-4	NC	NC
194			4	0	-.044	-.002	-6.655e-4	NC	NC
195			5	0	-.039	-.002	-6.655e-4	NC	NC
196	1	M40	1	0	-.044	-.002	-2.566e-4	NC	NC
197			2	0	-.05	-.002	-2.566e-4	NC	NC
198			3	0	-.052	-.002	-2.566e-4	NC	NC
199			4	0	-.05	-.002	-2.566e-4	NC	NC
200			5	0	-.044	-.002	-2.566e-4	NC	NC
201	1	M41	1	0	-.045	-.002	2.127e-4	NC	NC
202			2	0	-.05	-.002	2.127e-4	NC	NC
203			3	0	-.052	-.002	2.127e-4	NC	NC
204			4	0	-.05	-.002	2.127e-4	NC	NC
205			5	0	-.045	-.002	2.127e-4	NC	NC
206	1	M42	1	0	-.039	-.002	6.659e-4	NC	NC
207			2	0	-.045	-.002	6.659e-4	NC	NC
208			3	0	-.047	-.002	6.659e-4	NC	NC
209			4	0	-.045	-.002	6.659e-4	NC	NC

Member Section Deflections (Continued)

	LC	Member Label	Sec	x [in]	y [in]	z [in]	x Rotate[rad]	(n) L/y Ratio	(n) L/z Ratio
210			5	0	-.039	-.002	6.659e-4	NC	NC
211	1	M43	1	0	-.029	-.002	1.086e-3	NC	NC
212			2	0	-.034	-.002	1.086e-3	NC	NC
213			3	0	-.036	-.002	1.086e-3	NC	NC
214			4	0	-.034	-.002	1.086e-3	NC	NC
215			5	0	-.029	-.002	1.086e-3	NC	NC
216	1	M44	1	0	-.013	-.002	1.389e-3	NC	NC
217			2	0	-.019	-.002	1.389e-3	NC	NC
218			3	0	-.021	-.002	1.389e-3	NC	NC
219			4	0	-.019	-.002	1.389e-3	NC	NC
220			5	0	-.013	-.002	1.389e-3	NC	NC
221	1	M45	1	0	-.046	-.002	-9.599e-4	NC	NC
222			2	0	-.051	-.002	-9.599e-4	NC	NC
223			3	0	-.053	-.002	-9.599e-4	NC	NC
224			4	0	-.051	-.002	-9.599e-4	NC	NC
225			5	0	-.046	-.002	-9.599e-4	NC	NC
226	1	M46	1	0	-.03	-.002	-1.554e-3	NC	NC
227			2	0	-.035	-.002	-1.554e-3	NC	NC
228			3	0	-.037	-.002	-1.554e-3	NC	NC
229			4	0	-.035	-.002	-1.554e-3	NC	NC
230			5	0	-.03	-.002	-1.554e-3	NC	NC
231	1	M47	1	0	-.011	-.002	-1.437e-3	NC	NC
232			2	0	-.016	-.002	-1.437e-3	NC	NC
233			3	0	-.018	-.002	-1.437e-3	NC	NC
234			4	0	-.016	-.002	-1.437e-3	NC	NC
235			5	0	-.011	-.002	-1.437e-3	NC	NC
236	1	M48	1	0	-.044	0	-8.351e-4	NC	NC
237			2	0	-.054	0	-8.351e-4	NC	NC
238			3	0	-.058	0	-8.351e-4	8676.561	NC
239			4	0	-.054	0	-8.351e-4	NC	NC
240			5	0	-.044	0	-8.351e-4	NC	NC
241	1	M49	1	0	-.032	0	-1.15e-3	NC	NC
242			2	0	-.041	0	-1.15e-3	NC	NC
243			3	0	-.045	0	-1.15e-3	8754.045	NC
244			4	0	-.041	0	-1.15e-3	NC	NC
245			5	0	-.032	0	-1.15e-3	NC	NC
246	1	M50	1	0	-.016	0	-1.291e-3	NC	NC
247			2	0	-.026	0	-1.291e-3	NC	NC
248			3	0	-.03	0	-1.291e-3	8663.82	NC
249			4	0	-.026	0	-1.291e-3	NC	NC
250			5	0	-.016	0	-1.291e-3	NC	NC
251	1	M51	1	-.052	0	0	3.326e-8	NC	NC
252			2	-.052	.005	-.007	0	NC	NC
253			3	-.052	.002	-.004	0	NC	NC
254			4	-.053	0	0	0	NC	NC
255			5	-.053	.002	0	-3.333e-8	NC	NC
256	1	M52	1	-.054	0	0	-9.877e-8	NC	NC
257			2	-.054	0	-.012	-4.408e-8	NC	9130.305
258			3	-.054	.001	-.009	0	NC	NC
259			4	-.054	.004	-.001	6.529e-8	NC	NC
260			5	-.054	.002	0	1.2e-7	NC	NC
261	1	M53	1	-.049	0	0	0	NC	NC
262			2	-.049	-.006	-.012	0	NC	9012.014
263			3	-.049	.001	-.009	0	NC	NC
264			4	-.049	.009	-.001	0	NC	NC
265			5	-.049	.002	0	0	NC	NC
266	1	M54	1	-.038	0	0	0	NC	NC

Member Section Deflections (Continued)

	LC	Member Label	Sec	x [in]	y [in]	z [in]	x Rotate[rad]	(n) L/y Ratio	(n) L/z Ratio
267			2	-.038	-.01	-.012	0	NC	8980.748
268			3	-.038	.002	-.009	0	NC	NC
269			4	-.038	.013	-.001	0	9670.666	NC
270			5	-.038	.002	0	0	NC	NC
271	1	M55	1	-.024	0	0	8.118e-8	NC	NC
272			2	-.024	-.011	-.013	3.982e-8	9626.386	8178.746
273			3	-.024	.002	-.01	0	NC	NC
274			4	-.024	.015	-.002	-4.288e-8	8234.229	NC
275			5	-.024	.002	0	-8.423e-8	NC	NC
276	1	M56	1	-.01	0	0	-7.866e-8	NC	NC
277			2	-.01	-.008	-.051	-7.987e-8	NC	2127.533
278			3	-.01	.003	-.043	-8.109e-8	NC	2483.302
279			4	-.01	.013	-.014	-8.23e-8	9523.144	7462.32
280			5	-.01	.002	0	-8.352e-8	NC	NC
281	1	M57	1	0	0	0	0	NC	NC
282			2	0	-.001	-.052	0	NC	2080.893
283			3	0	.001	-.045	0	NC	2426.29
284			4	-.001	.003	-.015	0	NC	7264.012
285			5	-.002	.002	0	0	NC	NC
286	1	M58	1	-.006	0	0	6.972e-8	NC	NC
287			2	-.006	.006	-.051	7.593e-8	NC	2133.285
288			3	-.006	0	-.043	8.214e-8	NC	2490.357
289			4	-.006	-.006	-.014	8.835e-8	NC	7487.118
290			5	-.006	.002	0	9.455e-8	NC	NC
291	1	M59	1	-.017	0	0	-9.026e-8	NC	NC
292			2	-.017	.009	-.009	-4.392e-8	NC	NC
293			3	-.017	0	-.006	0	NC	NC
294			4	-.017	-.009	0	4.878e-8	NC	NC
295			5	-.017	.002	0	9.513e-8	NC	NC
296	1	M60	1	-.028	0	0	0	NC	NC
297			2	-.029	.009	-.008	0	NC	NC
298			3	-.029	0	-.005	0	NC	NC
299			4	-.029	-.008	0	0	NC	NC
300			5	-.029	.002	0	0	NC	NC
301	1	M61	1	-.038	0	0	0	NC	NC
302			2	-.038	.007	-.007	0	NC	NC
303			3	-.039	0	-.005	0	NC	NC
304			4	-.039	-.005	0	0	NC	NC
305			5	-.039	.002	0	0	NC	NC
306	1	M62	1	-.044	0	0	0	NC	NC
307			2	-.044	.003	-.007	0	NC	NC
308			3	-.044	0	-.005	0	NC	NC
309			4	-.044	-.001	0	0	NC	NC
310			5	-.044	.002	0	0	NC	NC
311	1	M63	1	-.044	0	0	0	NC	NC
312			2	-.044	-.002	-.007	0	NC	NC
313			3	-.045	0	-.005	0	NC	NC
314			4	-.045	.004	0	0	NC	NC
315			5	-.045	.002	0	0	NC	NC
316	1	M64	1	-.039	0	0	0	NC	NC
317			2	-.039	-.006	-.007	0	NC	NC
318			3	-.039	.001	-.005	0	NC	NC
319			4	-.039	.008	0	0	NC	NC
320			5	-.039	.002	0	0	NC	NC
321	1	M65	1	-.028	0	0	-3.986e-8	NC	NC
322			2	-.028	-.009	-.007	0	NC	NC
323			3	-.029	.002	-.005	1.012e-7	NC	NC

Company : JVA Consulting Engineers, Inc.
Designer : Kari Rogne
Job Number :
Solar D. Garage in place

Aug 5, 2007
6:45 PM
Checked By:_____

Member Section Deflections (Continued)

	LC	Member Label	Sec	x [in]	y [in]	z [in]	x Rotate[rad]	(n) L/y Ratio	(n) L/z Ratio
324			4	-.029	.013	0	1.717e-7	9276.951	NC
325			5	-.029	.002	0	2.422e-7	NC	NC
326	1	M66	1	-.015	0	0	-2.316e-7	NC	NC
327			2	-.014	-.01	-.008	-4.394e-7	NC	NC
328			3	-.014	.004	-.005	-6.472e-7	NC	NC
329			4	-.014	.017	0	-8.55e-7	7011.75	NC
330			5	-.013	.002	0	-1.063e-6	NC	NC
331	1	M67	1	-.015	0	0	2.316e-7	NC	NC
332			2	-.014	-.01	.008	4.398e-7	NC	NC
333			3	-.014	.004	.005	6.48e-7	NC	NC
334			4	-.014	.017	0	8.561e-7	7011.742	NC
335			5	-.013	.002	0	1.064e-6	NC	NC
336	1	M68	1	-.028	0	0	3.983e-8	NC	NC
337			2	-.028	-.009	.007	0	NC	NC
338			3	-.029	.002	.005	-1.004e-7	NC	NC
339			4	-.029	.013	0	-1.706e-7	9276.94	NC
340			5	-.029	.002	0	-2.407e-7	NC	NC
341	1	M69	1	-.039	0	0	0	NC	NC
342			2	-.039	-.006	.007	0	NC	NC
343			3	-.039	.001	.005	0	NC	NC
344			4	-.039	.008	0	0	NC	NC
345			5	-.039	.002	0	0	NC	NC
346	1	M70	1	-.044	0	0	0	NC	NC
347			2	-.044	-.002	.007	0	NC	NC
348			3	-.045	0	.005	0	NC	NC
349			4	-.045	.004	0	0	NC	NC
350			5	-.045	.002	0	0	NC	NC
351	1	M71	1	-.044	0	0	0	NC	NC
352			2	-.044	.003	.007	0	NC	NC
353			3	-.044	0	.005	0	NC	NC
354			4	-.044	-.001	0	0	NC	NC
355			5	-.044	.002	0	0	NC	NC
356	1	M72	1	-.038	0	0	0	NC	NC
357			2	-.038	.007	.007	0	NC	NC
358			3	-.039	0	.005	0	NC	NC
359			4	-.039	-.005	0	0	NC	NC
360			5	-.039	.002	0	0	NC	NC
361	1	M73	1	-.028	0	0	0	NC	NC
362			2	-.029	.009	.008	0	NC	NC
363			3	-.029	0	.005	0	NC	NC
364			4	-.029	-.008	0	0	NC	NC
365			5	-.029	.002	0	0	NC	NC
366	1	M74	1	-.017	0	0	9.029e-8	NC	NC
367			2	-.017	.009	.009	4.429e-8	NC	NC
368			3	-.017	0	.006	0	NC	NC
369			4	-.017	-.009	0	-4.772e-8	NC	NC
370			5	-.017	.002	0	-9.373e-8	NC	NC
371	1	M75	1	-.006	0	0	-6.969e-8	NC	NC
372			2	-.006	.006	.051	-7.556e-8	NC	2133.285
373			3	-.006	0	.043	-8.142e-8	NC	2490.357
374			4	-.006	-.006	.014	-8.729e-8	NC	7487.116
375			5	-.006	.002	0	-9.315e-8	NC	NC
376	1	M76	1	0	0	0	0	NC	NC
377			2	0	-.001	.052	0	NC	2080.893
378			3	0	.001	.045	0	NC	2426.29
379			4	-.001	.003	.015	0	NC	7264.011
380			5	-.002	.002	0	0	NC	NC

Member Section Deflections (Continued)

	LC	Member Label	Sec	x [in]	y [in]	z [in]	x Rotate[rad]	(n) L/y Ratio	(n) L/z Ratio
381	1	M77	1	-.01	0	0	7.87e-8	NC	NC
382			2	-.01	-.008	.051	8.025e-8	NC	2127.533
383			3	-.01	.003	.043	8.181e-8	NC	2483.302
384			4	-.01	.013	.014	8.336e-8	9523.139	7462.321
385			5	-.01	.002	0	8.492e-8	NC	NC
386	1	M78	1	-.024	0	0	-8.114e-8	NC	NC
387			2	-.024	-.011	.013	-3.945e-8	9626.381	8178.744
388			3	-.024	.002	.01	0	NC	NC
389			4	-.024	.015	.002	4.394e-8	8234.225	NC
390			5	-.024	.002	0	8.563e-8	NC	NC
391	1	M79	1	-.038	0	0	0	NC	NC
392			2	-.038	-.01	.012	0	NC	8980.743
393			3	-.038	.002	.009	0	NC	NC
394			4	-.038	.013	.001	0	9670.66	NC
395			5	-.038	.002	0	0	NC	NC
396	1	M80	1	-.049	0	0	0	NC	NC
397			2	-.049	-.006	.012	0	NC	9012.008
398			3	-.049	.001	.009	0	NC	NC
399			4	-.049	.009	.001	0	NC	NC
400			5	-.049	.002	0	0	NC	NC
401	1	M81	1	-.054	0	0	9.877e-8	NC	NC
402			2	-.054	0	.012	4.445e-8	NC	9130.297
403			3	-.054	.001	.009	0	NC	NC
404			4	-.054	.004	.001	-6.421e-8	NC	NC
405			5	-.054	.002	0	-1.185e-7	NC	NC
406	1	M82	1	-.052	0	0	-3.326e-8	NC	NC
407			2	-.052	.005	.007	0	NC	NC
408			3	-.052	.002	.004	0	NC	NC
409			4	-.053	0	0	0	NC	NC
410			5	-.053	.002	0	3.478e-8	NC	NC
411	1	M83	1	.008	.002	0	-1.663e-5	NC	NC
412			2	.008	0	.008	-1.134e-5	NC	NC
413			3	.008	-.005	0	-6.046e-6	NC	NC
414			4	.009	-.007	-.007	-7.549e-7	NC	NC
415			5	.009	0	0	4.537e-6	NC	NC
416	1	M84	1	.017	.001	0	-1.631e-5	NC	NC
417			2	.017	0	.007	-1.1e-5	NC	NC
418			3	.017	-.002	0	-5.69e-6	NC	NC
419			4	.017	-.003	-.006	-3.804e-7	NC	NC
420			5	.017	0	0	4.929e-6	NC	NC
421	1	M85	1	.024	.001	0	-1.226e-5	NC	NC
422			2	.024	0	.005	-8.236e-6	NC	NC
423			3	.024	0	0	-4.211e-6	NC	NC
424			4	.024	-.001	-.005	-1.865e-7	NC	NC
425			5	.024	0	0	3.838e-6	NC	NC
426	1	M86	1	.028	.001	0	-6.472e-6	NC	NC
427			2	.028	0	.002	-4.34e-6	NC	NC
428			3	.028	0	0	-2.209e-6	NC	NC
429			4	.028	0	-.002	-7.686e-8	NC	NC
430			5	.028	0	0	2.055e-6	NC	NC
431	1	M87	1	.029	.001	0	0	NC	NC
432			2	.029	0	0	0	NC	NC
433			3	.029	0	0	0	NC	NC
434			4	.029	0	0	0	NC	NC
435			5	.029	0	0	0	NC	NC
436	1	M88	1	.028	.001	0	6.47e-6	NC	NC
437			2	.028	0	-.002	4.339e-6	NC	NC

Company : JVA Consulting Engineers, Inc.
Designer : Kari Rogne
Job Number :
Solar D. Garage in place

Aug 5, 2007
6:45 PM
Checked By:_____

Member Section Deflections (Continued)

	LC	Member Label	Sec	x [in]	y [in]	z [in]	x Rotate[rad]	(n) L/y Ratio	(n) L/z Ratio
438			3	.028	0	0	2.208e-6	NC	NC
439			4	.028	0	.002	7.636e-8	NC	NC
440			5	.028	0	0	-2.055e-6	NC	NC
441	1	M89	1	.024	.001	0	1.226e-5	NC	NC
442			2	.024	0	-.005	8.235e-6	NC	NC
443			3	.024	0	0	4.21e-6	NC	NC
444			4	.024	-.001	.005	1.86e-7	NC	NC
445			5	.024	0	0	-3.838e-6	NC	NC
446	1	M90	1	.017	.001	0	1.631e-5	NC	NC
447			2	.017	0	-.007	1.1e-5	NC	NC
448			3	.017	-.002	0	5.689e-6	NC	NC
449			4	.017	-.003	.006	3.8e-7	NC	NC
450			5	.017	0	0	-4.929e-6	NC	NC
451	1	M91	1	.008	.002	0	1.663e-5	NC	NC
452			2	.008	0	-.008	1.134e-5	NC	NC
453			3	.008	-.005	0	6.046e-6	NC	NC
454			4	.009	-.007	.007	7.545e-7	NC	NC
455			5	.009	0	0	-4.537e-6	NC	NC

Member Section Stresses

	LC	Member Label	Sec	Axial[ksi]	y Shear[ksi]	z Shear[ksi]	y top Bending[ksi]	y bot Bend..	z top Bend..	z bot Bend...
1	1	M1	1	.091	.491	-.001	-6.715	6.715	.03	-.03
2			2	.097	-.018	0	1.143	-1.143	0	0
3			3	.091	.164	0	-3.324	3.324	0	0
4			4	.098	-.02	0	1.306	-1.306	0	0
5			5	.095	-.276	0	-5.63	5.63	0	0
6	1	M2	1	-.004	.041	0	-.981	.981	0	0
7			2	-.004	.021	0	.18	-.18	0	0
8			3	-.004	0	0	.567	-.567	0	0
9			4	-.004	-.021	0	.18	-.18	0	0
10			5	-.004	-.041	0	-.981	.981	0	0
11	1	M3	1	.095	.276	0	-5.63	5.63	0	0
12			2	.098	.02	0	1.306	-1.306	0	0
13			3	.091	-.164	0	-3.324	3.324	0	0
14			4	.097	.018	0	1.143	-1.143	0	0
15			5	.091	-.491	.001	-6.715	6.715	.03	-.03
16	1	M4	1	.023	.209	.002	-2.889	2.889	-.03	.03
17			2	.025	.009	0	.469	-.469	.01	-.01
18			3	.026	0	0	.6	-.6	.016	-.016
19			4	.025	-.009	0	.469	-.469	.01	-.01
20			5	.023	-.209	-.002	-2.89	2.89	-.03	.03
21	1	M5	1	.178	-.087	-.021	.395	-.395	1.964	-2.171
22			2	.19	-.087	-.021	.005	-.005	.693	-.767
23			3	.201	-.087	-.021	-.385	.385	-.577	.638
24			4	.213	-.087	-.021	-.775	.775	-1.847	2.042
25			5	.224	-.087	-.021	-1.165	1.165	-3.117	3.446
26	1	M6	1	.178	-.021	-.087	-.395	.395	1.964	-2.171
27			2	.19	-.021	-.087	-.005	.005	.693	-.767
28			3	.201	-.021	-.087	.385	-.385	-.577	.638
29			4	.213	-.021	-.087	.775	-.775	-1.847	2.042
30			5	.224	-.021	-.087	1.165	-1.165	-3.117	3.446
31	1	M7	1	.081	.004	-.092	-.473	.473	1.396	-1.544
32			2	.092	.004	-.092	.095	-.095	.368	-.407
33			3	.104	.004	-.092	.662	-.662	-.661	.73
34			4	.115	.004	-.092	1.23	-1.23	-1.689	1.867
35			5	.127	.004	-.092	1.797	-1.797	-2.718	3.004

Member Section Stresses (Continued)

	LC	Member Label	Sec	Axial[ksi]	y Shear[ksi]	z Shear[ksi]	y top Bending[ksi]	y bot Bend..	z top Bend..	z bot Bend...
36	1	M8	1	.081	-.092	.004	.473	-.473	1.396	-1.544
37			2	.092	-.092	.004	-.095	.095	.368	-.407
38			3	.104	-.092	.004	-.662	.662	-.661	.73
39			4	.115	-.092	.004	-1.23	1.23	-1.689	1.867
40			5	.127	-.092	.004	-1.797	1.797	-2.718	3.004
41	1	M9	1	0	.592	0	-1.181	1.181	-.014	.007
42			2	0	-.27	0	3.209	-3.209	0	0
43			3	.001	1.945	0	-8.204	8.204	-.003	.001
44			4	0	.199	0	3.872	-3.872	0	0
45			5	0	-.618	0	-1.352	1.352	0	0
46	1	M10	1	0	.089	0	.232	-.232	0	0
47			2	0	.044	0	.828	-.828	0	0
48			3	0	0	0	1.027	-1.027	0	0
49			4	0	-.044	0	.828	-.828	0	0
50			5	0	-.089	0	.232	-.232	0	0
51	1	M11	1	0	.618	0	-1.352	1.352	0	0
52			2	0	-.199	0	3.872	-3.872	0	0
53			3	.001	-1.945	0	-8.204	8.204	-.003	.001
54			4	0	.27	0	3.209	-3.209	0	0
55			5	0	-.592	0	-1.181	1.181	-.014	.007
56	1	M12	1	0	.164	0	-.243	.243	.024	-.009
57			2	0	.136	0	1.175	-1.175	-.005	.002
58			3	0	-.013	0	1.77	-1.77	-.009	.004
59			4	0	-.136	0	1.175	-1.175	-.005	.002
60			5	0	-.164	0	-.243	.243	.024	-.009
61	1	M13	1	0	.137	0	-.003	.003	0	0
62			2	0	.069	0	.918	-.918	0	0
63			3	0	0	0	1.225	-1.225	0	0
64			4	0	-.069	0	.918	-.918	0	0
65			5	0	-.137	0	-.003	.003	0	0
66	1	M14	1	0	.137	0	-.009	.009	0	0
67			2	0	.069	0	.912	-.912	0	0
68			3	0	0	0	1.218	-1.218	0	0
69			4	0	-.069	0	.912	-.912	0	0
70			5	0	-.137	0	-.009	.009	0	0
71	1	M15	1	0	.137	0	-.009	.009	0	0
72			2	0	.069	0	.911	-.911	0	0
73			3	0	0	0	1.218	-1.218	0	0
74			4	0	-.069	0	.911	-.911	0	0
75			5	0	-.137	0	-.009	.009	0	0
76	1	M16	1	0	.137	0	-.009	.009	0	0
77			2	0	.069	0	.911	-.911	0	0
78			3	0	0	0	1.218	-1.218	0	0
79			4	0	-.069	0	.911	-.911	0	0
80			5	0	-.137	0	-.009	.009	0	0
81	1	M17	1	0	.137	0	-.009	.009	0	0
82			2	0	.069	0	.911	-.911	0	0
83			3	0	0	0	1.218	-1.218	0	0
84			4	0	-.069	0	.911	-.911	0	0
85			5	0	-.137	0	-.009	.009	0	0
86	1	M18	1	0	.137	0	-.009	.009	0	0
87			2	0	.069	0	.911	-.911	0	0
88			3	0	0	0	1.218	-1.218	0	0
89			4	0	-.069	0	.911	-.911	0	0
90			5	0	-.137	0	-.009	.009	0	0
91	1	M19	1	0	.137	0	-.005	.005	0	0
92			2	0	.069	0	.915	-.915	0	0

Member Section Stresses (Continued)

	LC	Member Label	Sec	Axial[ksi]	y Shear[ksi]	z Shear[ksi]	y top Bending[ksi]	y bot Bend..	z top Bend..	z bot Bend...
93			3	0	0	0	1.222	-1.222	0	0
94			4	0	-.069	0	.915	-.915	0	0
95			5	0	-.137	0	-.005	.005	0	0
96	1	M20	1	0	.137	0	.119	-.119	0	0
97			2	0	.069	0	1.04	-1.04	0	0
98			3	0	0	0	1.347	-1.347	0	0
99			4	0	-.069	0	1.04	-1.04	0	0
100			5	0	-.137	0	.119	-.119	0	0
101	1	M21	1	0	.855	0	-.18	.18	0	0
102			2	0	.427	0	5.56	-5.56	0	0
103			3	0	0	0	7.473	-7.473	0	0
104			4	0	-.427	0	5.56	-5.56	0	0
105			5	0	-.855	0	-.18	.18	0	0
106	1	M22	1	0	.855	0	-.059	.059	0	0
107			2	0	.427	0	5.681	-5.681	0	0
108			3	0	0	0	7.594	-7.594	0	0
109			4	0	-.427	0	5.681	-5.681	0	0
110			5	0	-.855	0	-.059	.059	0	0
111	1	M23	1	0	.855	0	-.167	.167	0	0
112			2	0	.427	0	5.573	-5.573	0	0
113			3	0	0	0	7.486	-7.486	0	0
114			4	0	-.427	0	5.573	-5.573	0	0
115			5	0	-.855	0	-.167	.167	0	0
116	1	M24	1	0	.21	0	.102	-.102	0	0
117			2	0	.105	0	1.51	-1.51	0	0
118			3	0	0	0	1.979	-1.979	0	0
119			4	0	-.105	0	1.51	-1.51	0	0
120			5	0	-.21	0	.102	-.102	0	0
121	1	M25	1	0	.21	0	-.01	.01	0	0
122			2	0	.105	0	1.398	-1.398	0	0
123			3	0	0	0	1.867	-1.867	0	0
124			4	0	-.105	0	1.398	-1.398	0	0
125			5	0	-.21	0	-.01	.01	0	0
126	1	M26	1	0	.21	0	-.014	.014	0	0
127			2	0	.105	0	1.394	-1.394	0	0
128			3	0	0	0	1.863	-1.863	0	0
129			4	0	-.105	0	1.394	-1.394	0	0
130			5	0	-.21	0	-.014	.014	0	0
131	1	M27	1	0	.21	0	-.029	.029	0	0
132			2	0	.105	0	1.379	-1.379	0	0
133			3	0	0	0	1.848	-1.848	0	0
134			4	0	-.105	0	1.379	-1.379	0	0
135			5	0	-.21	0	-.029	.029	0	0
136	1	M28	1	-.001	.129	0	-.04	.04	0	0
137			2	-.001	.065	0	.827	-.827	0	0
138			3	-.001	0	0	1.116	-1.116	0	0
139			4	-.001	-.065	0	.827	-.827	0	0
140			5	-.001	-.129	0	-.04	.04	0	0
141	1	M29	1	.001	.048	0	-.03	.03	0	0
142			2	.001	.024	0	.295	-.295	0	0
143			3	.001	0	0	.404	-.404	0	0
144			4	.001	-.024	0	.295	-.295	0	0
145			5	.001	-.048	0	-.03	.03	0	0
146	1	M30	1	0	.048	0	-.011	.011	0	0
147			2	0	.024	0	.314	-.314	0	0
148			3	0	0	0	.423	-.423	0	0
149			4	0	-.024	0	.314	-.314	0	0

Member Section Stresses (Continued)

	LC	Member Label	Sec	Axial[ksi]	y Shear[ksi]	z Shear[ksi]	y top Bending[ksi]	y bot Bend..	z top Bend..	z bot Bend..
150			5	0	-.048	0	-.011	.011	0	0
151	1	M31	1	0	.048	0	-.009	.009	0	0
152			2	0	.024	0	.316	-.316	0	0
153			3	0	0	0	.424	-.424	0	0
154			4	0	-.024	0	.316	-.316	0	0
155			5	0	-.048	0	-.009	.009	0	0
156	1	M32	1	0	.048	0	-.009	.009	0	0
157			2	0	.024	0	.316	-.316	0	0
158			3	0	0	0	.424	-.424	0	0
159			4	0	-.024	0	.316	-.316	0	0
160			5	0	-.048	0	-.009	.009	0	0
161	1	M33	1	0	.048	0	-.011	.011	0	0
162			2	0	.024	0	.314	-.314	0	0
163			3	0	0	0	.422	-.422	0	0
164			4	0	-.024	0	.314	-.314	0	0
165			5	0	-.048	0	-.011	.011	0	0
166	1	M34	1	.001	.048	0	-.025	.025	0	0
167			2	.001	.024	0	.3	-.3	0	0
168			3	.001	0	0	.408	-.408	0	0
169			4	.001	-.024	0	.3	-.3	0	0
170			5	.001	-.048	0	-.025	.025	0	0
171	1	M35	1	.001	.048	0	-.027	.027	0	0
172			2	.001	.024	0	.298	-.298	0	0
173			3	.001	0	0	.407	-.407	0	0
174			4	.001	-.024	0	.298	-.298	0	0
175			5	.001	-.048	0	-.027	.027	0	0
176	1	M36	1	.001	.048	0	-.025	.025	0	0
177			2	.001	.024	0	.3	-.3	0	0
178			3	.001	0	0	.408	-.408	0	0
179			4	.001	-.024	0	.3	-.3	0	0
180			5	.001	-.048	0	-.025	.025	0	0
181	1	M37	1	0	.048	0	-.009	.009	0	0
182			2	0	.024	0	.316	-.316	0	0
183			3	0	0	0	.424	-.424	0	0
184			4	0	-.024	0	.316	-.316	0	0
185			5	0	-.048	0	-.009	.009	0	0
186	1	M38	1	0	.048	0	-.007	.007	0	0
187			2	0	.024	0	.318	-.318	0	0
188			3	0	0	0	.427	-.427	0	0
189			4	0	-.024	0	.318	-.318	0	0
190			5	0	-.048	0	-.007	.007	0	0
191	1	M39	1	0	.048	0	-.007	.007	0	0
192			2	0	.024	0	.318	-.318	0	0
193			3	0	0	0	.427	-.427	0	0
194			4	0	-.024	0	.318	-.318	0	0
195			5	0	-.048	0	-.007	.007	0	0
196	1	M40	1	0	.048	0	-.007	.007	0	0
197			2	0	.024	0	.318	-.318	0	0
198			3	0	0	0	.427	-.427	0	0
199			4	0	-.024	0	.318	-.318	0	0
200			5	0	-.048	0	-.007	.007	0	0
201	1	M41	1	0	.048	0	-.007	.007	0	0
202			2	0	.024	0	.318	-.318	0	0
203			3	0	0	0	.427	-.427	0	0
204			4	0	-.024	0	.318	-.318	0	0
205			5	0	-.048	0	-.007	.007	0	0
206	1	M42	1	0	.048	0	-.007	.007	0	0

Member Section Stresses (Continued)

	LC	Member Label	Sec	Axial[ksi]	y Shear[ksi]	z Shear[ksi]	y top Bending[ksi]	y bot Bend..	z top Bend..	z bot Bend...
207			2	0	.024	0	.318	-.318	0	0
208			3	0	0	0	.427	-.427	0	0
209			4	0	-.024	0	.318	-.318	0	0
210			5	0	-.048	0	-.007	.007	0	0
211	1	M43	1	0	.048	0	-.006	.006	0	0
212			2	0	.024	0	.319	-.319	0	0
213			3	0	0	0	.427	-.427	0	0
214			4	0	-.024	0	.319	-.319	0	0
215			5	0	-.048	0	-.006	.006	0	0
216	1	M44	1	0	.048	0	-.004	.004	0	0
217			2	0	.024	0	.321	-.321	0	0
218			3	0	0	0	.43	-.43	0	0
219			4	0	-.024	0	.321	-.321	0	0
220			5	0	-.048	0	-.004	.004	0	0
221	1	M45	1	0	.048	0	-.003	.003	0	0
222			2	0	.024	0	.322	-.322	0	0
223			3	0	0	0	.43	-.43	0	0
224			4	0	-.024	0	.322	-.322	0	0
225			5	0	-.048	0	-.003	.003	0	0
226	1	M46	1	0	.048	0	-.002	.002	0	0
227			2	0	.024	0	.323	-.323	0	0
228			3	0	0	0	.432	-.432	0	0
229			4	0	-.024	0	.323	-.323	0	0
230			5	0	-.048	0	-.002	.002	0	0
231	1	M47	1	0	.048	0	-.015	.015	0	0
232			2	0	.024	0	.311	-.311	0	0
233			3	0	0	0	.419	-.419	0	0
234			4	0	-.024	0	.311	-.311	0	0
235			5	0	-.048	0	-.015	.015	0	0
236	1	M48	1	0	.089	0	.006	-.006	0	0
237			2	0	.044	0	.602	-.602	0	0
238			3	0	0	0	.801	-.801	0	0
239			4	0	-.044	0	.602	-.602	0	0
240			5	0	-.089	0	.006	-.006	0	0
241	1	M49	1	0	.089	0	0	0	0	0
242			2	0	.044	0	.596	-.596	0	0
243			3	0	0	0	.795	-.795	0	0
244			4	0	-.044	0	.596	-.596	0	0
245			5	0	-.089	0	0	0	0	0
246	1	M50	1	0	.089	0	.007	-.007	0	0
247			2	0	.044	0	.603	-.603	0	0
248			3	0	0	0	.802	-.802	0	0
249			4	0	-.044	0	.603	-.603	0	0
250			5	0	-.089	0	.007	-.007	0	0
251	1	M51	1	.236	.01	-.011	-.54	.54	.635	-.635
252			2	.225	.01	-.011	-.28	.28	.361	-.361
253			3	.213	.01	-.011	-.02	.02	.087	-.087
254			4	.202	.01	-.011	.239	-.239	-.187	.187
255			5	.19	.01	-.011	.499	-.499	-.461	.461
256	1	M52	1	.11	0	-.002	.132	-.132	.504	-.504
257			2	.099	0	-.002	.065	-.065	.296	-.296
258			3	.087	0	-.002	-.002	.002	.087	-.087
259			4	.076	0	-.002	-.068	.068	-.121	.121
260			5	.064	0	-.002	-.135	.135	-.329	.329
261	1	M53	1	.118	-.002	-.002	.534	-.534	.51	-.51
262			2	.106	-.002	-.002	.265	-.265	.299	-.299
263			3	.095	-.002	-.002	-.003	.003	.089	-.089

Company : JVA Consulting Engineers, Inc.
Designer : Kari Rogne
Job Number :
Solar D. Garage in place

Aug 5, 2007
6:45 PM
Checked By:_____

Member Section Stresses (Continued)

	LC	Member Label	Sec	Axial[ksi]	y Shear[ksi]	z Shear[ksi]	y top Bending[ksi]	y bot Bend..	z top Bend..	z bot Bend...
264			4	.083	-.002	-.002	-.272	.272	-.122	.122
265			5	.072	-.002	-.002	-.54	.54	-.333	.333
266	1	M54	1	.127	-.004	-.002	.837	-.837	.512	-.512
267			2	.116	-.004	-.002	.415	-.415	.3	-.3
268			3	.104	-.004	-.002	-.007	.007	.089	-.089
269			4	.093	-.004	-.002	-.43	.43	-.122	.122
270			5	.081	-.004	-.002	-.852	.852	-.333	.333
271	1	M55	1	.117	-.004	-.002	.955	-.955	.553	-.553
272			2	.105	-.004	-.002	.471	-.471	.326	-.326
273			3	.094	-.004	-.002	-.013	.013	.1	-.1
274			4	.082	-.004	-.002	-.497	.497	-.127	.127
275			5	.071	-.004	-.002	-.981	.981	-.353	.353
276	1	M56	1	.076	-.004	-.007	.795	-.795	1.876	-1.876
277			2	.064	-.004	-.007	.39	-.39	1.154	-1.154
278			3	.053	-.004	-.007	-.015	.015	.433	-.433
279			4	.041	-.004	-.007	-.42	.42	-.289	.289
280			5	.03	-.004	-.007	-.826	.826	-1.011	1.011
281	1	M57	1	.43	0	-.007	.149	-.149	1.916	-1.916
282			2	.418	0	-.007	.074	-.074	1.179	-1.179
283			3	.407	0	-.007	0	0	.443	-.443
284			4	.395	0	-.007	-.075	.075	-.294	.294
285			5	.384	0	-.007	-.15	.15	-1.031	1.031
286	1	M58	1	.076	.002	-.007	-.518	.518	1.871	-1.871
287			2	.064	.002	-.007	-.252	.252	1.151	-1.151
288			3	.053	.002	-.007	.014	-.014	.431	-.431
289			4	.041	.002	-.007	.28	-.28	-.289	.289
290			5	.03	.002	-.007	.545	-.545	-1.009	1.009
291	1	M59	1	.122	.003	-.002	-.738	.738	.399	-.399
292			2	.11	.003	-.002	-.363	.363	.23	-.23
293			3	.099	.003	-.002	.012	-.012	.061	-.061
294			4	.087	.003	-.002	.386	-.386	-.108	.108
295			5	.076	.003	-.002	.761	-.761	-.277	.277
296	1	M60	1	.132	.003	-.001	-.709	.709	.353	-.353
297			2	.121	.003	-.001	-.351	.351	.201	-.201
298			3	.109	.003	-.001	.007	-.007	.049	-.049
299			4	.098	.003	-.001	.365	-.365	-.103	.103
300			5	.086	.003	-.001	.723	-.723	-.255	.255
301	1	M61	1	.128	.002	-.001	-.504	.504	.352	-.352
302			2	.117	.002	-.001	-.25	.25	.2	-.2
303			3	.105	.002	-.001	.004	-.004	.049	-.049
304			4	.094	.002	-.001	.259	-.259	-.103	.103
305			5	.082	.002	-.001	.513	-.513	-.254	.254
306	1	M62	1	.126	0	-.001	-.184	.184	.352	-.352
307			2	.115	0	-.001	-.091	.091	.2	-.2
308			3	.103	0	-.001	.002	-.002	.049	-.049
309			4	.092	0	-.001	.095	-.095	-.103	.103
310			5	.08	0	-.001	.188	-.188	-.254	.254
311	1	M63	1	.128	0	-.001	.185	-.185	.352	-.352
312			2	.117	0	-.001	.093	-.093	.2	-.2
313			3	.105	0	-.001	0	0	.049	-.049
314			4	.094	0	-.001	-.093	.093	-.103	.103
315			5	.082	0	-.001	-.185	.185	-.254	.254
316	1	M64	1	.144	-.003	-.001	.542	-.542	.352	-.352
317			2	.133	-.003	-.001	.27	-.27	.2	-.2
318			3	.121	-.003	-.001	-.002	.002	.049	-.049
319			4	.11	-.003	-.001	-.274	.274	-.103	.103
320			5	.098	-.003	-.001	-.546	.546	-.254	.254

Member Section Stresses (Continued)

	LC	Member Label	Sec	Axial[ksi]	y Shear[ksi]	z Shear[ksi]	y top Bending[ksi]	y bot Bend..	z top Bend..	z bot Bend...
321	1	M65	1	.109	-.004	-.001	.837	-.837	.352	-.352
322			2	.097	-.004	-.001	.412	-.412	.2	-.2
323			3	.086	-.004	-.001	-.013	.013	.049	-.049
324			4	.074	-.004	-.001	-.438	.438	-.103	.103
325			5	.063	-.004	-.001	-.863	.863	-.254	.254
326	1	M66	1	-.262	-.005	-.001	1.007	-1.007	.355	-.355
327			2	-.273	-.005	-.001	.488	-.488	.202	-.202
328			3	-.285	-.005	-.001	-.031	.031	.049	-.049
329			4	-.296	-.005	-.001	-.55	.55	-.104	.104
330			5	-.308	-.005	-.001	-1.069	1.069	-.257	.257
331	1	M67	1	-.262	-.005	.001	1.007	-1.007	-.355	.355
332			2	-.273	-.005	.001	.488	-.488	-.202	.202
333			3	-.285	-.005	.001	-.031	.031	-.049	.049
334			4	-.296	-.005	.001	-.55	.55	.104	-.104
335			5	-.308	-.005	.001	-1.069	1.069	.257	-.257
336	1	M68	1	.109	-.004	.001	.837	-.837	-.352	.352
337			2	.097	-.004	.001	.412	-.412	-.2	.2
338			3	.086	-.004	.001	-.013	.013	-.049	.049
339			4	.074	-.004	.001	-.438	.438	.103	-.103
340			5	.063	-.004	.001	-.863	.863	.254	-.254
341	1	M69	1	.144	-.003	.001	.542	-.542	-.352	.352
342			2	.133	-.003	.001	.27	-.27	-.2	.2
343			3	.121	-.003	.001	-.002	.002	-.049	.049
344			4	.11	-.003	.001	-.274	.274	.103	-.103
345			5	.098	-.003	.001	-.546	.546	.254	-.254
346	1	M70	1	.128	0	.001	.185	-.185	-.352	.352
347			2	.117	0	.001	.093	-.093	-.2	.2
348			3	.105	0	.001	0	0	-.049	.049
349			4	.094	0	.001	-.093	.093	.103	-.103
350			5	.082	0	.001	-.185	.185	.254	-.254
351	1	M71	1	.126	0	.001	-.184	.184	-.352	.352
352			2	.115	0	.001	-.091	.091	-.2	.2
353			3	.103	0	.001	.002	-.002	-.049	.049
354			4	.092	0	.001	.095	-.095	.103	-.103
355			5	.08	0	.001	.188	-.188	.254	-.254
356	1	M72	1	.128	.002	.001	-.504	.504	-.352	.352
357			2	.117	.002	.001	-.25	.25	-.2	.2
358			3	.105	.002	.001	.004	-.004	-.049	.049
359			4	.094	.002	.001	.259	-.259	.103	-.103
360			5	.082	.002	.001	.513	-.513	.254	-.254
361	1	M73	1	.132	.003	.001	-.709	.709	-.353	.353
362			2	.121	.003	.001	-.351	.351	-.201	.201
363			3	.109	.003	.001	.007	-.007	-.049	.049
364			4	.098	.003	.001	.365	-.365	.103	-.103
365			5	.086	.003	.001	.723	-.723	.255	-.255
366	1	M74	1	.122	.003	.002	-.738	.738	-.399	.399
367			2	.11	.003	.002	-.363	.363	-.23	.23
368			3	.099	.003	.002	.012	-.012	-.061	.061
369			4	.087	.003	.002	.386	-.386	.108	-.108
370			5	.076	.003	.002	.761	-.761	.277	-.277
371	1	M75	1	.076	.002	.007	-.518	.518	-1.871	1.871
372			2	.064	.002	.007	-.252	.252	-1.151	1.151
373			3	.053	.002	.007	.014	-.014	-.431	.431
374			4	.041	.002	.007	.28	-.28	.289	-.289
375			5	.03	.002	.007	.545	-.545	1.009	-1.009
376	1	M76	1	.43	0	.007	.149	-.149	-1.916	1.916
377			2	.418	0	.007	.074	-.074	-1.179	1.179

Member Section Stresses (Continued)

	LC	Member Label	Sec	Axial[ksi]	y Shear[ksi]	z Shear[ksi]	y top Bending[ksi]	y bot Bend..	z top Bend..	z bot Bend..
378			3	.407	0	.007	0	0	-.443	.443
379			4	.395	0	.007	-.075	.075	.294	-.294
380			5	.384	0	.007	-.15	.15	1.031	-1.031
381	1	M77	1	.076	-.004	.007	.795	-.795	-1.876	1.876
382			2	.064	-.004	.007	.39	-.39	-1.154	1.154
383			3	.053	-.004	.007	-.015	.015	-.433	.433
384			4	.041	-.004	.007	-.42	.42	.289	-.289
385			5	.03	-.004	.007	-.826	.826	1.011	-1.011
386	1	M78	1	.117	-.004	.002	.955	-.955	-.553	.553
387			2	.105	-.004	.002	.471	-.471	-.326	.326
388			3	.094	-.004	.002	-.013	.013	-.1	.1
389			4	.082	-.004	.002	-.497	.497	.127	-.127
390			5	.071	-.004	.002	-.981	.981	.353	-.353
391	1	M79	1	.127	-.004	.002	.837	-.837	-.512	.512
392			2	.116	-.004	.002	.415	-.415	-.3	.3
393			3	.104	-.004	.002	-.007	.007	-.089	.089
394			4	.093	-.004	.002	-.43	.43	.122	-.122
395			5	.081	-.004	.002	-.852	.852	.333	-.333
396	1	M80	1	.118	-.002	.002	.534	-.534	-.51	.51
397			2	.106	-.002	.002	.265	-.265	-.299	.299
398			3	.095	-.002	.002	-.003	.003	-.089	.089
399			4	.083	-.002	.002	-.272	.272	.122	-.122
400			5	.072	-.002	.002	-.54	.54	.333	-.333
401	1	M81	1	.11	0	.002	.132	-.132	-.504	.504
402			2	.099	0	.002	.065	-.065	-.296	.296
403			3	.087	0	.002	-.002	.002	-.087	.087
404			4	.076	0	.002	-.068	.068	.121	-.121
405			5	.064	0	.002	-.135	.135	.329	-.329
406	1	M82	1	.236	.01	.011	-.54	.54	-.635	.635
407			2	.225	.01	.011	-.28	.28	-.361	.361
408			3	.213	.01	.011	-.02	.02	-.087	.087
409			4	.202	.01	.011	.239	-.239	.187	-.187
410			5	.19	.01	.011	.499	-.499	.461	-.461
411	1	M83	1	-.155	.001	.003	-.192	.192	-.6	.6
412			2	-.144	.001	.003	-.065	.065	-.305	.305
413			3	-.133	.001	.003	.062	-.062	-.009	.009
414			4	-.121	.001	.003	.19	-.19	.286	-.286
415			5	-.11	.001	.003	.317	-.317	.581	-.581
416	1	M84	1	-.012	0	.002	-.1	.1	-.513	.513
417			2	0	0	.002	-.036	.036	-.259	.259
418			3	.011	0	.002	.029	-.029	-.005	.005
419			4	.023	0	.002	.093	-.093	.249	-.249
420			5	.034	0	.002	.158	-.158	.504	-.504
421	1	M85	1	.008	0	.002	-.055	.055	-.367	.367
422			2	.02	0	.002	-.021	.021	-.184	.184
423			3	.031	0	.002	.013	-.013	0	0
424			4	.043	0	.002	.047	-.047	.182	-.182
425			5	.054	0	.002	.081	-.081	.365	-.365
426	1	M86	1	.002	0	0	-.035	.035	-.193	.193
427			2	.014	0	0	-.014	.014	-.097	.097
428			3	.025	0	0	.006	-.006	0	0
429			4	.037	0	0	.026	-.026	.096	-.096
430			5	.048	0	0	.046	-.046	.193	-.193
431	1	M87	1	0	0	0	-.029	.029	0	0
432			2	.012	0	0	-.012	.012	0	0
433			3	.024	0	0	.004	-.004	0	0
434			4	.035	0	0	.02	-.02	0	0

Member Section Stresses (Continued)

	LC	Member Label	Sec	Axial[ksi]	y Shear[ksi]	z Shear[ksi]	y top Bending[ksi]	y bot Bend..	z top Bend..	z bot Bend...
435			5	.047	0	0	.036	-.036	0	0
436	1	M88	1	.002	0	0	-.035	.035	.193	-.193
437			2	.014	0	0	-.014	.014	.097	-.097
438			3	.025	0	0	.006	-.006	0	0
439			4	.037	0	0	.026	-.026	-.096	.096
440			5	.048	0	0	.046	-.046	-.193	.193
441	1	M89	1	.008	0	-.002	-.055	.055	.367	-.367
442			2	.02	0	-.002	-.021	.021	.184	-.184
443			3	.031	0	-.002	.013	-.013	0	0
444			4	.043	0	-.002	.047	-.047	-.182	.182
445			5	.054	0	-.002	.081	-.081	-.365	.365
446	1	M90	1	-.012	0	-.002	-.1	.1	.513	-.513
447			2	0	0	-.002	-.036	.036	.259	-.259
448			3	.011	0	-.002	.029	-.029	.005	-.005
449			4	.023	0	-.002	.093	-.093	-.249	.249
450			5	.034	0	-.002	.158	-.158	-.504	.504
451	1	M91	1	-.155	.001	-.003	-.192	.192	.6	-.6
452			2	-.144	.001	-.003	-.065	.065	.305	-.305
453			3	-.133	.001	-.003	.062	-.062	.009	-.009
454			4	-.121	.001	-.003	.19	-.19	-.286	.286
455			5	-.11	.001	-.003	.317	-.317	-.581	.581

Member AISC ASD Steel Code Checks

	LC	Member	Shape	UC Max	Loc[ft]	Shear UC	Loc[ft]	Dir	Fa[ksi]	Ft[ksi]	Fby[ksi]	Fbz[ksi]	Cb	Cmy	Cmz	Eqn
1	1	M1	HSS2X2X4	.357	0	.035	0	y	1.282	21.6	21.6	21.6	1.081	.605	.85	H1-1
2	1	M2	HSS2X2X4	.046	10	.003	10	y	5.128	21.6	21.6	21.6	1	.6	.85	H2-1
3	1	M3	HSS2X2X4	.357	20	.035	20	y	1.282	21.6	21.6	21.6	1.081	.605	.85	H1-1
4	1	M4	HSS2X2X4	.136	10	.018	10	y	5.128	21.6	21.6	21.6	1	1	.85	H1-2
5	1	M5	L6X6X5	.018	9	.006	0	y	12.507	21.6	- Code..					
6	1	M6	L6X6X5	.018	9	.006	0	z	12.507	21.6	- Code..					
7	1	M7	L6X6X5	.010	9	.006	0	z	12.507	21.6	- Code..					
8	1	M8	L6X6X5	.010	9	.006	0	y	12.507	21.6	- Code..					
9	1	M9	MC6X15.1	.705	10	.159	8.958	y	2.05	21.6	27	11.641	1	.6	.85	H1-2
10	1	M10	MC6X12	.066	5	.006	10	y	5.494	21.6	27	15.606	1	.6	.85	H1-2
11	1	M11	MC6X15.1	.705	10	.159	11.042	y	2.05	21.6	27	11.641	1	.6	.85	H1-2
12	1	M12	MC6X12	.114	5	.020	.938	y	5.494	21.6	27	15.606	1	1	.85	H1-3
13	1	M13	MC6X12	.079	5	.010	10	y	5.494	21.6	27	15.606	1	.6	.85	H1-2
14	1	M14	MC6X12	.078	5	.010	10	y	5.494	21.6	27	15.606	1	.6	.85	H1-3
15	1	M15	MC6X12	.078	5	.010	10	y	5.494	21.6	27	15.606	1	.6	.85	H1-3
16	1	M16	MC6X12	.078	5	.010	10	y	5.494	21.6	27	15.606	1	.6	.85	H1-3
17	1	M17	MC6X12	.078	5	.010	10	y	5.494	21.6	27	15.606	1	.6	.85	H1-3
18	1	M18	MC6X12	.078	5	.010	0	y	5.494	21.6	27	15.606	1	.6	.85	H1-3
19	1	M19	MC6X12	.078	5	.010	10	y	5.494	21.6	27	15.606	1	.6	.85	H1-3
20	1	M20	MC6X12	.086	5	.010	10	y	5.494	21.6	27	15.606	1	.6	.85	H1-3
21	1	M21	MC6X12	.479	5	.059	10	y	5.494	21.6	27	15.606	1	.6	.85	H1-3
22	1	M22	MC6X12	.487	5	.059	10	y	5.494	21.6	27	15.606	1	.6	.85	H1-2
23	1	M23	MC6X12	.480	5	.059	0	y	5.494	21.6	27	15.606	1	.6	.85	H1-3
24	1	M24	MC6X12	.127	5	.015	0	y	5.494	21.6	27	15.606	1	.6	.85	H1-3
25	1	M25	MC6X12	.120	5	.015	0	y	5.494	21.6	27	15.606	1	.6	.85	H1-3
26	1	M26	MC6X12	.119	5	.015	0	y	5.494	21.6	27	15.606	1	.6	.85	H1-3
27	1	M27	MC6X12	.118	5	.015	0	y	5.494	21.6	27	15.606	1	.6	.85	H1-3
28	1	M28	MC6X12	.072	5	.009	0	y	5.494	21.6	27	15.606	1	.6	.85	H1-3
29	1	M29	MC6X12	.026	5	.003	10	y	5.494	21.6	27	15.606	1	.6	.85	H1-2
30	1	M30	MC6X12	.027	5	.003	10	y	5.494	21.6	27	15.606	1	.6	.85	H1-2
31	1	M31	MC6X12	.027	5	.003	10	y	5.494	21.6	27	15.606	1	.6	.85	H1-2
32	1	M32	MC6X12	.027	5	.003	10	y	5.494	21.6	27	15.606	1	.6	.85	H1-2

Company : JVA Consulting Engineers, Inc.
Designer : Kari Rogne
Job Number :
Solar D. Garage in place

Aug 5, 2007
6:45 PM
Checked By:_____

Member AISC ASD Steel Code Checks (Continued)

	LC	Member	Shape	UC Max	Loc[ft]	Shear UC	Loc[ft]	Dir	Fa[ksi]	Ft[ksi]	Fby[ksi]	Fbz[ksi]	Cb	Cmy	Cmz	Eqn
33	1	M33	MC6X12	.027	5	.003	10	y	5.494	21.6	27	15.606	1	.6	.85	H1-2
34	1	M34	MC6X12	.026	5	.003	10	y	5.494	21.6	27	15.606	1	.6	.85	H1-2
35	1	M35	MC6X12	.026	5	.003	0	y	5.494	21.6	27	15.606	1	.6	.85	H1-2
36	1	M36	MC6X12	.026	5	.003	0	y	5.494	21.6	27	15.606	1	.6	.85	H1-2
37	1	M37	MC6X12	.027	5	.003	0	y	5.494	21.6	27	15.606	1	.6	.85	H1-2
38	1	M38	MC6X12	.027	5	.003	0	y	5.494	21.6	27	15.606	1	.6	.85	H1-2
39	1	M39	MC6X12	.027	5	.003	0	y	5.494	21.6	27	15.606	1	.6	.85	H1-2
40	1	M40	MC6X12	.027	5	.003	0	y	5.494	21.6	27	15.606	1	.6	.85	H1-2
41	1	M41	MC6X12	.027	5	.003	0	y	5.494	21.6	27	15.606	1	.6	.85	H1-2
42	1	M42	MC6X12	.027	5	.003	0	y	5.494	21.6	27	15.606	1	.6	.85	H1-2
43	1	M43	MC6X12	.027	5	.003	0	y	5.494	21.6	27	15.606	1	.6	.85	H1-2
44	1	M44	MC6X12	.028	5	.003	0	y	5.494	21.6	27	15.606	1	.6	.85	H1-2
45	1	M45	MC6X12	.028	5	.003	10	y	5.494	21.6	27	15.606	1	.6	.85	H1-2
46	1	M46	MC6X12	.028	5	.003	10	y	5.494	21.6	27	15.606	1	.6	.85	H1-2
47	1	M47	MC6X12	.027	5	.003	10	y	5.494	21.6	27	15.606	1	.6	.85	H1-3
48	1	M48	MC6X12	.051	5	.006	10	y	5.494	21.6	27	15.606	1	.6	.85	H1-3
49	1	M49	MC6X12	.051	5	.006	10	y	5.494	21.6	27	15.606	1	.6	.85	H1-2
50	1	M50	MC6X12	.051	5	.006	10	y	5.494	21.6	27	15.606	1	.6	.85	H1-2
51	1	M51	HSS2X2X2	.060	0	.001	0	z	7.409	21.6	23.76	23.76	2.3	.31	.23	H1-2
52	1	M52	1x1/16	.113	0	.000	0	z	1.067	21.6	23.76	23.76	2.3	.339	.21	H1-1
53	1	M53	1x1/16	.124	0	.000	0	y	1.067	21.6	23.76	23.76	2.3	.339	.205	H1-1
54	1	M54	1x1/16	.136	0	.000	0	y	1.067	21.6	23.76	23.76	2.3	.339	.207	H1-1
55	1	M55	1x1/16	.128	0	.000	0	y	1.067	21.6	23.76	23.76	2.3	.344	.21	H1-1
56	1	M56	1x1/16	.116	0	.000	0	z	1.067	21.6	23.76	23.76	2.3	.384	.215	H1-2
57	1	M57	1x1/16	.457	0	.000	0	z	1.067	21.6	23.76	23.76	2.3	.385	.204	H1-1
58	1	M58	1x1/16	.109	0	.000	0	z	1.067	21.6	23.76	23.76	2.3	.384	.22	H1-1
59	1	M59	1x1/16	.128	0	.000	0	y	1.067	21.6	23.76	23.76	2.3	.322	.212	H1-1
60	1	M60	1x1/16	.136	0	.000	0	y	1.067	21.6	23.76	23.76	2.3	.311	.208	H1-1
61	1	M61	1x1/16	.131	0	.000	0	y	1.067	21.6	23.76	23.76	2.3	.311	.207	H1-1
62	1	M62	1x1/16	.125	0	.000	0	z	1.067	21.6	23.76	23.76	2.3	.311	.209	H1-1
63	1	M63	1x1/16	.127	0	.000	0	z	1.067	21.6	23.76	23.76	2.3	.311	.2	H1-1
64	1	M64	1x1/16	.146	0	.000	0	y	1.067	21.6	23.76	23.76	2.3	.311	.203	H1-1
65	1	M65	1x1/16	.116	0	.000	0	y	1.067	21.6	23.76	23.76	2.3	.311	.212	H1-1
66	1	M66	1x1/16	.070	9	.000	0	y	1.067	21.6	23.76	23.76	2.3	.311	.223	H2-1
67	1	M67	1x1/16	.070	9	.000	0	y	1.067	21.6	23.76	23.76	2.3	.311	.223	H2-1
68	1	M68	1x1/16	.116	0	.000	0	y	1.067	21.6	23.76	23.76	2.3	.311	.212	H1-1
69	1	M69	1x1/16	.146	0	.000	0	y	1.067	21.6	23.76	23.76	2.3	.311	.203	H1-1
70	1	M70	1x1/16	.127	0	.000	0	z	1.067	21.6	23.76	23.76	2.3	.311	.2	H1-1
71	1	M71	1x1/16	.125	0	.000	0	z	1.067	21.6	23.76	23.76	2.3	.311	.209	H1-1
72	1	M72	1x1/16	.131	0	.000	0	y	1.067	21.6	23.76	23.76	2.3	.311	.207	H1-1
73	1	M73	1x1/16	.136	0	.000	0	y	1.067	21.6	23.76	23.76	2.3	.311	.208	H1-1
74	1	M74	1x1/16	.128	0	.000	0	y	1.067	21.6	23.76	23.76	2.3	.322	.212	H1-1
75	1	M75	1x1/16	.109	0	.000	0	z	1.067	21.6	23.76	23.76	2.3	.384	.22	H1-1
76	1	M76	1x1/16	.457	0	.000	0	z	1.067	21.6	23.76	23.76	2.3	.385	.204	H1-1
77	1	M77	1x1/16	.116	0	.000	0	z	1.067	21.6	23.76	23.76	2.3	.384	.215	H1-2
78	1	M78	1x1/16	.128	0	.000	0	y	1.067	21.6	23.76	23.76	2.3	.344	.21	H1-1
79	1	M79	1x1/16	.136	0	.000	0	y	1.067	21.6	23.76	23.76	2.3	.339	.207	H1-1
80	1	M80	1x1/16	.124	0	.000	0	y	1.067	21.6	23.76	23.76	2.3	.339	.205	H1-1
81	1	M81	1x1/16	.113	0	.000	0	z	1.067	21.6	23.76	23.76	2.3	.339	.21	H1-1
82	1	M82	HSS2X2X2	.060	0	.001	0	z	7.409	21.6	23.76	23.76	2.3	.31	.23	H1-2
83	1	M83	1x1/16	.043	9	.000	0	z	1.067	21.6	23.76	23.76	2.3	.213	.358	H2-1
84	1	M84	1x1/16	.039	9	.000	0	z	1.067	21.6	23.76	23.76	2.3	.208	.346	H1-1
85	1	M85	1x1/16	.055	9	.000	0	z	1.067	21.6	23.76	23.76	2.3	.202	.327	H1-1
86	1	M86	1x1/16	.048	9	.000	0	z	1.067	21.6	23.76	23.76	1.75	.201	.6	H1-1
87	1	M87	1x1/16	.045	9	.000	0	y	1.067	21.6	23.76	23.76	1.75	.6	.6	H1-1
88	1	M88	1x1/16	.048	9	.000	0	z	1.067	21.6	23.76	23.76	1.75	.201	.6	H1-1
89	1	M89	1x1/16	.055	9	.000	0	z	1.067	21.6	23.76	23.76	2.3	.202	.327	H1-1

Company : JVA Consulting Engineers, Inc.
Designer : Kari Rogne
Job Number : Solar D. Garage in place

Aug 5, 2007
6:45 PM
Checked By:_____

Member AISC ASD Steel Code Checks (Continued)

	LC	Member	Shape	UC Max	Loc[ft]	Shear UC	Loc[ft]	Dir	Fa[ksi]	Ft[ksi]	Fby[ksi]	Fbz[ksi]	Cb	Cmy	Cmz	Eqn
90	1	M90	1x1/16	.039	9	.000	0	z	1.067	21.6	23.76	23.76	2.3	.208	.346	H1-1
91	1	M91	1x1/16	.043	9	.000	0	z	1.067	21.6	23.76	23.76	2.3	.213	.358	H2-1

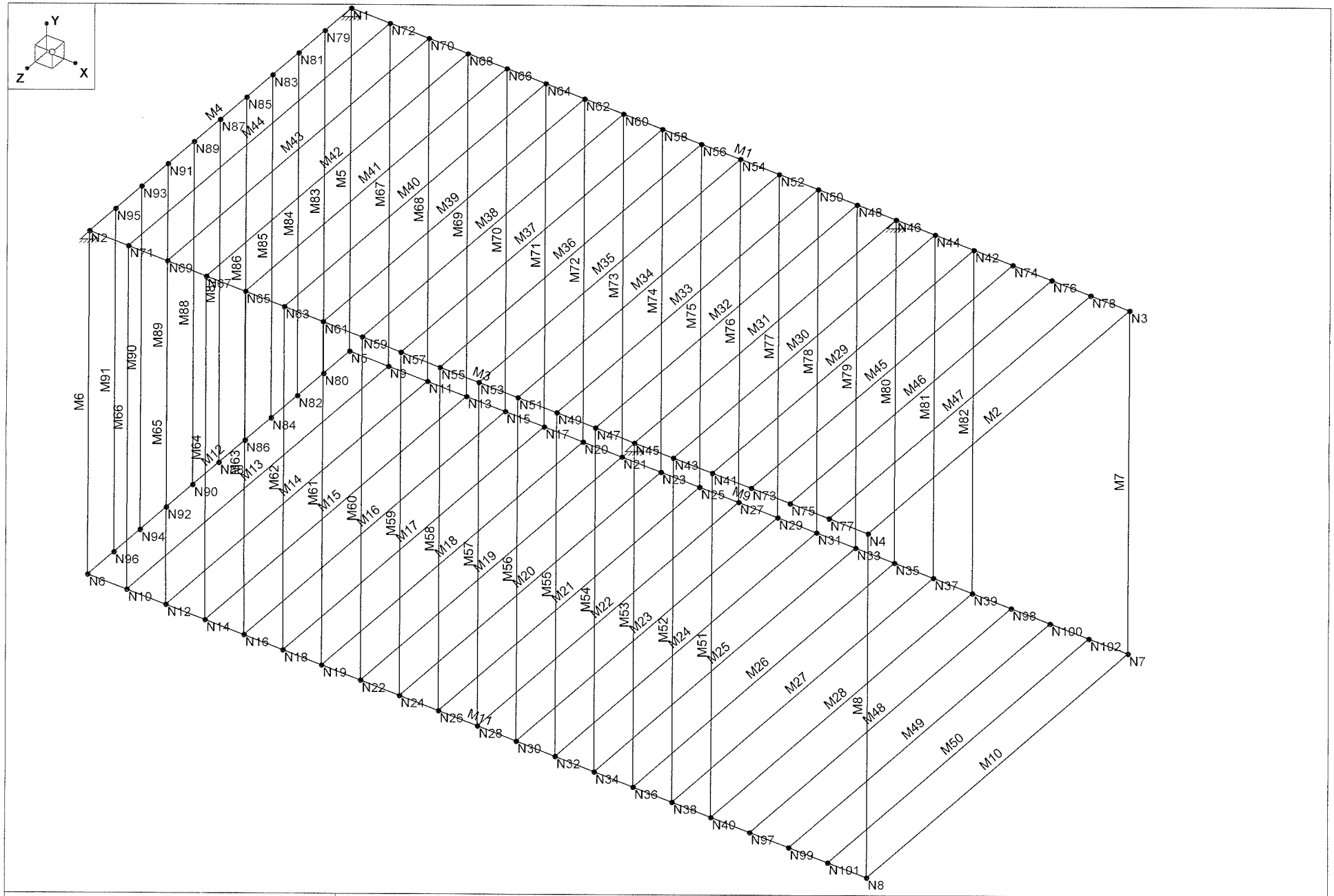

JVA Consulting Engineers, Inc.	Solar D. Garage shipping	
Kari Rogne		Aug 5, 2007 at 3:28 PM
		S C Garage Shipping.r3d

CU 333

Company : JVA Consulting Engineers, Inc.
Designer : Kari Rogne
Job Number : Solar D. Garage shipping

Aug 5, 2007
6:43 PM
Checked By:_____

Joint Coordinates and Temperatures

	Label	X [ft]	Y [ft]	Z [ft]	Temp [F]	Detach From Di...
1	N1	0	0	0	0	
2	N2	0	0	10	0	
3	N3	20	0	0	0	
4	N4	20	0	10	0	
5	N5	0	-9	0	0	
6	N6	0	-9	10	0	
7	N7	20	-9	0	0	
8	N8	20	-9	10	0	
9	N9	1	-9	0	0	
10	N10	1	-9	10	0	
11	N11	2	-9	0	0	
12	N12	2	-9	10	0	
13	N13	3	-9	0	0	
14	N14	3	-9	10	0	
15	N15	4	-9	0	0	
16	N16	4	-9	10	0	
17	N17	5	-9	0	0	
18	N18	5	-9	10	0	
19	N19	6	-9	10	0	
20	N20	6	-9	0	0	
21	N21	7	-9	0	0	
22	N22	7	-9	10	0	
23	N23	8	-9	0	0	
24	N24	8	-9	10	0	
25	N25	9	-9	0	0	
26	N26	9	-9	10	0	
27	N27	10	-9	0	0	
28	N28	10	-9	10	0	
29	N29	11	-9	0	0	
30	N30	11	-9	10	0	
31	N31	12	-9	0	0	
32	N32	12	-9	10	0	
33	N33	13	-9	0	0	
34	N34	13	-9	10	0	
35	N35	14	-9	0	0	
36	N36	14	-9	10	0	
37	N37	15	-9	0	0	
38	N38	15	-9	10	0	
39	N39	16	-9	0	0	
40	N40	16	-9	10	0	
41	N41	16	0	10	0	
42	N42	16	0	0	0	
43	N43	15	0	10	0	
44	N44	15	0	0	0	
45	N45	14	0	10	0	
46	N46	14	0	0	0	
47	N47	13	0	10	0	
48	N48	13	0	0	0	
49	N49	12	0	10	0	
50	N50	12	0	0	0	
51	N51	11	0	10	0	
52	N52	11	0	0	0	
53	N53	10	0	10	0	
54	N54	10	0	0	0	
55	N55	9	0	10	0	
56	N56	9	0	0	0	

Company : JVA Consulting Engineers, Inc.
Designer : Kari Rogne
Job Number : Solar D. Garage shipping

Aug 5, 2007
6:43 PM
Checked By:_____

Joint Coordinates and Temperatures (Continued)

	Label	X [ft]	Y [ft]	Z [ft]	Temp [F]	Detach From Di...
57	N57	8	0	10	0	
58	N58	8	0	0	0	
59	N59	7	0	10	0	
60	N60	7	0	0	0	
61	N61	6	0	10	0	
62	N62	6	0	0	0	
63	N63	5	0	10	0	
64	N64	5	0	0	0	
65	N65	4	0	10	0	
66	N66	4	0	0	0	
67	N67	3	0	10	0	
68	N68	3	0	0	0	
69	N69	2	0	10	0	
70	N70	2	0	0	0	
71	N71	1	0	10	0	
72	N72	1	0	0	0	
73	N73	17	0	10	0	
74	N74	17	0	0	0	
75	N75	18	0	10	0	
76	N76	18	0	0	0	
77	N77	19	0	10	0	
78	N78	19	0	0	0	
79	N79	0	0	1	0	
80	N80	0	-9	1	0	
81	N81	0	0	2	0	
82	N82	0	-9	2	0	
83	N83	0	0	3	0	
84	N84	0	-9	3	0	
85	N85	0	0	4	0	
86	N86	0	-9	4	0	
87	N87	0	0	5	0	
88	N88	0	-9	5	0	
89	N89	0	0	6	0	
90	N90	0	-9	6	0	
91	N91	0	0	7	0	
92	N92	0	-9	7	0	
93	N93	0	0	8	0	
94	N94	0	-9	8	0	
95	N95	0	0	9	0	
96	N96	0	-9	9	0	
97	N97	17	-9	10	0	
98	N98	17	-9	0	0	
99	N99	18	-9	10	0	
100	N100	18	-9	0	0	
101	N101	19	-9	10	0	
102	N102	19	-9	0	0	

Hot Rolled Steel Section Sets

	Label	Shape	Type	Design List	Material	Design Rules	A [in2]	Iyy [in4]	Izz [in4]	J [in4]
1	Opening Col...	HSS2X2X4	Column	Channel	A36	Typical	1.505	.744	.744	1.31
2	Corrugation	1x1/16	Column	Rectangula...	A36	Typical	1	.083	.083	.141
3	Corner Colu...	L6X6X5	Column	Single Angle	A36	Typical	3.65	13	13	.129
4	Cross Brace	L3X2X3	VBrace	Channel	A36	Typical	.902	.307	.842	.012
5	Floor Beam	MC6X12	Beam	Channel	A36	Typical	3.53	1.87	18.7	.15
6	Grider Floor	MC6X18	Beam	Channel	A36	Typical	5.29	5.93	29.7	.38
7	UPPER TUBE	HSS2X2X4	Beam	Channel	A36	Typical	1.505	.744	.744	1.31

Company : JVA Consulting Engineers, Inc.
Designer : Kari Rogne
Job Number :
Solar D. Garage shipping

Aug 5, 2007
6:43 PM
Checked By:_____

Member Primary Data

	Label	I Joint	J Joint	K Joint	Rotate(deg)	Section/Shape	Type	Design List	Material	Design Rules
1	M1	N1	N3			UPPER TUBE	Beam	Channel	A36	Typical
2	M2	N4	N3			UPPER TUBE	Beam	Channel	A36	Typical
3	M3	N4	N2			UPPER TUBE	Beam	Channel	A36	Typical
4	M4	N1	N2			UPPER TUBE	Beam	Channel	A36	Typical
5	M5	N1	N5		180	Corner Column	Column	Single An...	A36	Typical
6	M6	N2	N6		90	Corner Column	Column	Single An...	A36	Typical
7	M7	N3	N7		270	Corner Column	Column	Single An...	A36	Typical
8	M8	N4	N8			Corner Column	Column	Single An...	A36	Typical
9	M9	N5	N7			Grider Floor	Beam	Channel	A36	Typical
10	M10	N8	N7			Floor Beam	Beam	Channel	A36	Typical
11	M11	N8	N6			Grider Floor	Beam	Channel	A36	Typical
12	M12	N5	N6			Floor Beam	Beam	Channel	A36	Typical
13	M13	N9	N10			Floor Beam	Beam	Channel	A36	Typical
14	M14	N11	N12			Floor Beam	Beam	Channel	A36	Typical
15	M15	N13	N14			Floor Beam	Beam	Channel	A36	Typical
16	M16	N15	N16			Floor Beam	Beam	Channel	A36	Typical
17	M17	N17	N18			Floor Beam	Beam	Channel	A36	Typical
18	M18	N19	N20			Floor Beam	Beam	Channel	A36	Typical
19	M19	N21	N22			Floor Beam	Beam	Channel	A36	Typical
20	M20	N23	N24			Floor Beam	Beam	Channel	A36	Typical
21	M21	N25	N26			Floor Beam	Beam	Channel	A36	Typical
22	M22	N27	N28			Floor Beam	Beam	Channel	A36	Typical
23	M23	N29	N30			Floor Beam	Beam	Channel	A36	Typical
24	M24	N31	N32			Floor Beam	Beam	Channel	A36	Typical
25	M25	N33	N34			Floor Beam	Beam	Channel	A36	Typical
26	M26	N35	N36			Floor Beam	Beam	Channel	A36	Typical
27	M27	N37	N38			Floor Beam	Beam	Channel	A36	Typical
28	M28	N39	N40			Floor Beam	Beam	Channel	A36	Typical
29	M29	N41	N42			Floor Beam	Beam	Channel	A36	Typical
30	M30	N43	N44			Floor Beam	Beam	Channel	A36	Typical
31	M31	N45	N46			Floor Beam	Beam	Channel	A36	Typical
32	M32	N47	N48			Floor Beam	Beam	Channel	A36	Typical
33	M33	N49	N50			Floor Beam	Beam	Channel	A36	Typical
34	M34	N51	N52			Floor Beam	Beam	Channel	A36	Typical
35	M35	N53	N54			Floor Beam	Beam	Channel	A36	Typical
36	M36	N55	N56			Floor Beam	Beam	Channel	A36	Typical
37	M37	N57	N58			Floor Beam	Beam	Channel	A36	Typical
38	M38	N59	N60			Floor Beam	Beam	Channel	A36	Typical
39	M39	N61	N62			Floor Beam	Beam	Channel	A36	Typical
40	M40	N63	N64			Floor Beam	Beam	Channel	A36	Typical
41	M41	N65	N66			Floor Beam	Beam	Channel	A36	Typical
42	M42	N67	N68			Floor Beam	Beam	Channel	A36	Typical
43	M43	N69	N70			Floor Beam	Beam	Channel	A36	Typical
44	M44	N71	N72			Floor Beam	Beam	Channel	A36	Typical
45	M45	N73	N74			Floor Beam	Beam	Channel	A36	Typical
46	M46	N75	N76			Floor Beam	Beam	Channel	A36	Typical
47	M47	N77	N78			Floor Beam	Beam	Channel	A36	Typical
48	M48	N97	N98			Floor Beam	Beam	Channel	A36	Typical
49	M49	N99	N100			Floor Beam	Beam	Channel	A36	Typical
50	M50	N101	N102			Floor Beam	Beam	Channel	A36	Typical
51	M51	N40	N41			Opening Colu...	Column	Channel	A36	Typical
52	M52	N38	N43			Corrugation	Column	Rectangul...	A36	Typical
53	M53	N36	N45			Corrugation	Column	Rectangul...	A36	Typical
54	M54	N34	N47			Corrugation	Column	Rectangul...	A36	Typical
55	M55	N32	N49			Corrugation	Column	Rectangul...	A36	Typical
56	M56	N30	N51			Corrugation	Column	Rectangul...	A36	Typical

Company : JVA Consulting Engineers, Inc.
Designer : Kari Rogne
Job Number :
Solar D. Garage shipping

Aug 5, 2007
6:43 PM
Checked By:_____

Member Primary Data (Continued)

	Label	I Joint	J Joint	K Joint	Rotate(deg)	Section/Shape	Type	Design List	Material	Design Rules
57	M57	N28	N53			Corrugation	Column	Rectangul...	A36	Typical
58	M58	N26	N55			Corrugation	Column	Rectangul...	A36	Typical
59	M59	N24	N57			Corrugation	Column	Rectangul...	A36	Typical
60	M60	N22	N59			Corrugation	Column	Rectangul...	A36	Typical
61	M61	N19	N61			Corrugation	Column	Rectangul...	A36	Typical
62	M62	N18	N63			Corrugation	Column	Rectangul...	A36	Typical
63	M63	N16	N65			Corrugation	Column	Rectangul...	A36	Typical
64	M64	N14	N67			Corrugation	Column	Rectangul...	A36	Typical
65	M65	N12	N69			Corrugation	Column	Rectangul...	A36	Typical
66	M66	N10	N71			Corrugation	Column	Rectangul...	A36	Typical
67	M67	N9	N72			Corrugation	Column	Rectangul...	A36	Typical
68	M68	N11	N70			Corrugation	Column	Rectangul...	A36	Typical
69	M69	N13	N68			Corrugation	Column	Rectangul...	A36	Typical
70	M70	N15	N66			Corrugation	Column	Rectangul...	A36	Typical
71	M71	N17	N64			Corrugation	Column	Rectangul...	A36	Typical
72	M72	N20	N62			Corrugation	Column	Rectangul...	A36	Typical
73	M73	N21	N60			Corrugation	Column	Rectangul...	A36	Typical
74	M74	N23	N58			Corrugation	Column	Rectangul...	A36	Typical
75	M75	N25	N56			Corrugation	Column	Rectangul...	A36	Typical
76	M76	N27	N54			Corrugation	Column	Rectangul...	A36	Typical
77	M77	N29	N52			Corrugation	Column	Rectangul...	A36	Typical
78	M78	N31	N50			Corrugation	Column	Rectangul...	A36	Typical
79	M79	N33	N48			Corrugation	Column	Rectangul...	A36	Typical
80	M80	N35	N46			Corrugation	Column	Rectangul...	A36	Typical
81	M81	N37	N44			Corrugation	Column	Rectangul...	A36	Typical
82	M82	N39	N42			Opening Colu...	Column	Channel	A36	Typical
83	M83	N79	N80			Corrugation	Column	Rectangul...	A36	Typical
84	M84	N81	N82			Corrugation	Column	Rectangul...	A36	Typical
85	M85	N83	N84			Corrugation	Column	Rectangul...	A36	Typical
86	M86	N85	N86			Corrugation	Column	Rectangul...	A36	Typical
87	M87	N87	N88			Corrugation	Column	Rectangul...	A36	Typical
88	M88	N89	N90			Corrugation	Column	Rectangul...	A36	Typical
89	M89	N91	N92			Corrugation	Column	Rectangul...	A36	Typical
90	M90	N93	N94			Corrugation	Column	Rectangul...	A36	Typical
91	M91	N95	N96			Corrugation	Column	Rectangul...	A36	Typical

Member Distributed Loads (BLC 1 : Dead Load)

	Member Label	Direction	Start Magnitude[k/ft,d...	End Magnitude[k/ft,d...	Start Location[ft,%]	End Location[ft,%]
1	M12	Y	-.022	-.022	0	0
2	M13	Y	-.022	-.022	0	0
3	M14	Y	-.022	-.022	0	0
4	M15	Y	-.022	-.022	0	0
5	M16	Y	-.022	-.022	0	0
6	M17	Y	-.022	-.022	0	0
7	M18	Y	-.022	-.022	0	0
8	M19	Y	-.022	-.022	0	0
9	M20	Y	-.022	-.022	0	0
10	M21	Y	-.2	-.2	0	0
11	M22	Y	-.2	-.2	0	0
12	M23	Y	-.2	-.2	0	0
13	M24	Y	-.02	-.02	0	0
14	M25	Y	-.02	-.02	0	0
15	M26	Y	-.02	-.02	0	0
16	M27	Y	-.02	-.02	0	0
17	M28	Y	-.02	-.02	0	0
18	M48	Y	-.01	-.01	0	0

Member Distributed Loads (BLC 1 : Dead Load) (Continued)

	Member Label	Direction	Start Magnitude[k/ft,d...	End Magnitude[k/ft,d...	Start Location[ft,%]	End Location[ft,%]
19	M49	Y	-.01	-.01	0	0
20	M50	Y	-.01	-.01	0	0
21	M10	Y	-.01	-.01	0	0

Joint Reactions (By Combination)

	LC	Joint Label	X [k]	Y [k]	Z [k]	MX [k-ft]	MY [k-ft]	MZ [k-ft]
1	1	N2	-.319	2.725	-.01	0	0	0
2	1	N1	-.319	2.725	.01	0	0	0
3	1	N45	.319	5.748	0	0	0	0
4	1	N46	.319	5.748	0	0	0	0
5	1	Totals:	0	16.946	0			
6	1	COG (ft):	X: 9.497	Y: -7.164	Z: 5			

Member Section Deflections

	LC	Member Label	Sec	x [in]	y [in]	z [in]	x Rotate[rad]	(n) L/y Ratio	(n) L/z Ratio
1	1	M1	1	0	0	0	4.868e-4	NC	NC
2			2	0	-.226	0	1.298e-4	993.397	NC
3			3	0	-.209	0	1.205e-4	1001.749	NC
4			4	0	.022	0	1.281e-4	NC	NC
5			5	0	.06	0	8.52e-5	NC	NC
6	1	M2	1	0	.06	0	1.868e-3	NC	NC
7			2	0	.052	0	1.868e-3	NC	NC
8			3	0	.047	0	1.868e-3	9068.156	NC
9			4	0	.052	0	1.868e-3	NC	NC
10			5	0	.06	0	1.868e-3	NC	NC
11	1	M3	1	0	.06	0	8.521e-5	NC	NC
12			2	0	.022	0	1.281e-4	NC	NC
13			3	0	-.209	0	1.205e-4	1001.749	NC
14			4	0	-.226	0	1.298e-4	993.398	NC
15			5	0	0	0	4.868e-4	NC	NC
16	1	M4	1	0	0	0	-1.924e-3	NC	NC
17			2	0	-.024	0	-1.762e-3	5035.142	NC
18			3	0	-.033	-.001	-1.735e-3	3691.345	NC
19			4	0	-.024	0	-1.762e-3	5035.143	NC
20			5	0	0	0	-1.924e-3	NC	NC
21	1	M5	1	0	0	0	-8.548e-6	NC	NC
22			2	0	-.036	-.008	-6.18e-6	3004.137	NC
23			3	0	-.068	-.011	-3.811e-6	1599.905	9794.838
24			4	.001	-.111	-.009	-1.443e-6	972.505	NC
25			5	.001	-.183	0	9.256e-7	590.192	NC
26	1	M6	1	0	0	0	8.548e-6	NC	NC
27			2	0	-.008	-.036	6.18e-6	NC	3004.139
28			3	0	-.011	-.068	3.812e-6	9794.834	1599.906
29			4	.001	-.009	-.111	1.445e-6	NC	972.505
30			5	.001	0	-.183	-9.233e-7	NC	590.192
31	1	M7	1	-.06	0	0	-3.026e-6	NC	NC
32			2	-.06	-.005	.056	-1.994e-6	NC	NC
33			3	-.061	-.007	.111	-9.621e-7	NC	5642.212
34			4	-.061	-.006	.156	6.959e-8	NC	5663.582
35			5	-.061	0	.183	1.101e-6	NC	NC
36	1	M8	1	-.06	0	0	3.026e-6	NC	NC
37			2	-.06	.056	-.005	1.995e-6	NC	NC
38			3	-.061	.111	-.007	9.636e-7	5642.228	NC
39			4	-.061	.156	-.006	-6.77e-8	5663.596	NC
40			5	-.061	.183	0	-1.099e-6	NC	NC

Member Section Deflections (Continued)

	LC	Member Label	Sec	x [in]	y [in]	z [in]	x Rotate[rad]	(n) L/y Ratio	(n) L/z Ratio
41	1	M9	1	-.183	-.001	0	8.617e-4	NC	NC
42			2	-.183	-.226	0	3.72e-4	998.621	NC
43			3	-.183	-.209	0	2.316e-3	1004.748	NC
44			4	-.183	.018	0	3.488e-4	8723.384	NC
45			5	-.183	.061	0	5.774e-4	NC	NC
46	1	M10	1	0	.061	-.183	1.573e-4	NC	NC
47			2	0	.047	-.183	1.573e-4	8560.469	NC
48			3	0	.042	-.183	1.573e-4	6267.222	NC
49			4	0	.047	-.183	1.573e-4	8560.445	NC
50			5	0	.061	-.183	1.573e-4	NC	NC
51	1	M11	1	.183	.061	0	5.774e-4	NC	NC
52			2	.183	.018	0	3.488e-4	8723.366	NC
53			3	.183	-.209	0	2.316e-3	1004.748	NC
54			4	.183	-.226	0	3.72e-4	998.621	NC
55			5	.183	-.001	0	8.617e-4	NC	NC
56	1	M12	1	0	-.001	.183	-3.924e-3	NC	NC
57			2	0	-.024	.183	-2.113e-3	5402.571	NC
58			3	0	-.032	.183	-1.829e-3	3873.351	NC
59			4	0	-.024	.183	-2.113e-3	5402.572	NC
60			5	0	-.001	.183	-3.924e-3	NC	NC
61	1	M13	1	0	-.051	.183	-4.142e-3	NC	NC
62			2	0	-.061	.183	-4.142e-3	NC	NC
63			3	0	-.065	.183	-4.142e-3	8232.41	NC
64			4	0	-.061	.183	-4.142e-3	NC	NC
65			5	0	-.051	.183	-4.142e-3	NC	NC
66	1	M14	1	0	-.102	.183	-4.095e-3	NC	NC
67			2	0	-.112	.183	-4.095e-3	NC	NC
68			3	0	-.116	.183	-4.095e-3	8568.082	NC
69			4	0	-.112	.183	-4.095e-3	NC	NC
70			5	0	-.102	.183	-4.095e-3	NC	NC
71	1	M15	1	0	-.15	.183	-3.75e-3	NC	NC
72			2	0	-.16	.183	-3.75e-3	NC	NC
73			3	0	-.164	.183	-3.75e-3	8582.072	NC
74			4	0	-.16	.183	-3.75e-3	NC	NC
75			5	0	-.15	.183	-3.75e-3	NC	NC
76	1	M16	1	0	-.192	.183	-3.155e-3	NC	NC
77			2	0	-.202	.183	-3.155e-3	NC	NC
78			3	0	-.206	.183	-3.155e-3	8582.609	NC
79			4	0	-.202	.183	-3.155e-3	NC	NC
80			5	0	-.192	.183	-3.155e-3	NC	NC
81	1	M17	1	0	-.226	.183	-2.357e-3	NC	NC
82			2	0	-.236	.183	-2.357e-3	NC	NC
83			3	0	-.24	.183	-2.357e-3	8582.535	NC
84			4	0	-.236	.183	-2.357e-3	NC	NC
85			5	0	-.226	.183	-2.357e-3	NC	NC
86	1	M18	1	0	-.249	-.183	1.401e-3	NC	NC
87			2	0	-.259	-.183	1.401e-3	NC	NC
88			3	0	-.263	-.183	1.401e-3	8580.281	NC
89			4	0	-.259	-.183	1.401e-3	NC	NC
90			5	0	-.249	-.183	1.401e-3	NC	NC
91	1	M19	1	0	-.26	.183	-3.279e-4	NC	NC
92			2	0	-.27	.183	-3.279e-4	NC	NC
93			3	0	-.274	.183	-3.279e-4	8525.466	NC
94			4	0	-.27	.183	-3.279e-4	NC	NC
95			5	0	-.26	.183	-3.279e-4	NC	NC
96	1	M20	1	0	-.257	.183	8.188e-4	NC	NC
97			2	0	-.269	.183	8.188e-4	NC	NC

Member Section Deflections (Continued)

	LC	Member Label	Sec	x [in]	y [in]	z [in]	x Rotate[rad]	(n) L/y Ratio	(n) L/z Ratio
98			3	0	-.274	.183	8.188e-4	7372.34	NC
99			4	0	-.269	.183	8.188e-4	NC	NC
100			5	0	-.257	.183	8.188e-4	NC	NC
101	1	M21	1	0	-.241	.183	1.997e-3	NC	NC
102			2	0	-.301	.183	1.997e-3	1986.135	NC
103			3	0	-.326	.183	1.997e-3	1412.485	NC
104			4	0	-.301	.183	1.997e-3	1986.135	NC
105			5	0	-.241	.183	1.997e-3	NC	NC
106	1	M22	1	0	-.209	.183	3.092e-3	NC	NC
107			2	0	-.271	.183	3.092e-3	1935.423	NC
108			3	0	-.296	.183	3.092e-3	1378.242	NC
109			4	0	-.271	.183	3.092e-3	1935.423	NC
110			5	0	-.209	.183	3.092e-3	NC	NC
111	1	M23	1	0	-.166	.183	3.918e-3	NC	NC
112			2	0	-.226	.183	3.918e-3	1986.77	NC
113			3	0	-.25	.183	3.918e-3	1412.913	NC
114			4	0	-.226	.183	3.918e-3	1986.77	NC
115			5	0	-.166	.183	3.918e-3	NC	NC
116	1	M24	1	0	-.114	.183	4.283e-3	NC	NC
117			2	0	-.125	.183	4.283e-3	NC	NC
118			3	0	-.129	.183	4.283e-3	7752.167	NC
119			4	0	-.125	.183	4.283e-3	NC	NC
120			5	0	-.114	.183	4.283e-3	NC	NC
121	1	M25	1	0	-.061	.183	4.053e-3	NC	NC
122			2	0	-.07	.183	4.053e-3	NC	NC
123			3	0	-.074	.183	4.053e-3	9054.442	NC
124			4	0	-.07	.183	4.053e-3	NC	NC
125			5	0	-.061	.183	4.053e-3	NC	NC
126	1	M26	1	0	-.015	.183	3.251e-3	NC	NC
127			2	0	-.024	.183	3.251e-3	NC	NC
128			3	0	-.028	.183	3.251e-3	9118.002	NC
129			4	0	-.024	.183	3.251e-3	NC	NC
130			5	0	-.015	.183	3.251e-3	NC	NC
131	1	M27	1	0	.018	.183	2.249e-3	NC	NC
132			2	0	.008	.183	2.249e-3	NC	NC
133			3	0	.005	.183	2.249e-3	9145.715	NC
134			4	0	.008	.183	2.249e-3	NC	NC
135			5	0	.018	.183	2.249e-3	NC	NC
136	1	M28	1	0	.039	.183	1.432e-3	NC	NC
137			2	0	.03	.183	1.432e-3	NC	NC
138			3	0	.026	.183	1.432e-3	9812.02	NC
139			4	0	.03	.183	1.432e-3	NC	NC
140			5	0	.039	.183	1.432e-3	NC	NC
141	1	M29	1	0	.038	0	-8.825e-4	NC	NC
142			2	0	.034	0	-8.825e-4	NC	NC
143			3	0	.033	0	-8.825e-4	NC	NC
144			4	0	.034	0	-8.825e-4	NC	NC
145			5	0	.038	0	-8.825e-4	NC	NC
146	1	M30	1	0	.022	0	-1.307e-3	NC	NC
147			2	0	.018	0	-1.307e-3	NC	NC
148			3	0	.017	0	-1.307e-3	NC	NC
149			4	0	.018	0	-1.307e-3	NC	NC
150			5	0	.022	0	-1.307e-3	NC	NC
151	1	M31	1	0	0	0	-3.292e-3	NC	NC
152			2	0	-.003	0	-3.292e-3	NC	NC
153			3	0	-.005	0	-3.292e-3	NC	NC
154			4	0	-.003	0	-3.292e-3	NC	NC

Member Section Deflections (Continued)

	LC	Member Label	Sec	x [in]	y [in]	z [in]	x Rotate[rad]	(n) L/y Ratio	(n) L/z Ratio
155			5	0	0	0	-3.292e-3	NC	NC
156	1	M32	1	0	-.058	0	-5.099e-3	NC	NC
157			2	0	-.061	0	-5.099e-3	NC	NC
158			3	0	-.063	0	-5.099e-3	NC	NC
159			4	0	-.061	0	-5.099e-3	NC	NC
160			5	0	-.058	0	-5.099e-3	NC	NC
161	1	M33	1	0	-.115	0	-4.431e-3	NC	NC
162			2	0	-.118	0	-4.431e-3	NC	NC
163			3	0	-.12	0	-4.431e-3	NC	NC
164			4	0	-.118	0	-4.431e-3	NC	NC
165			5	0	-.115	0	-4.431e-3	NC	NC
166	1	M34	1	0	-.166	0	-3.957e-3	NC	NC
167			2	0	-.169	0	-3.957e-3	NC	NC
168			3	0	-.171	0	-3.957e-3	NC	NC
169			4	0	-.169	0	-3.957e-3	NC	NC
170			5	0	-.166	0	-3.957e-3	NC	NC
171	1	M35	1	0	-.209	0	-3.126e-3	NC	NC
172			2	0	-.213	0	-3.126e-3	NC	NC
173			3	0	-.214	0	-3.126e-3	NC	NC
174			4	0	-.213	0	-3.126e-3	NC	NC
175			5	0	-.209	0	-3.126e-3	NC	NC
176	1	M36	1	0	-.241	0	-1.997e-3	NC	NC
177			2	0	-.244	0	-1.997e-3	NC	NC
178			3	0	-.245	0	-1.997e-3	NC	NC
179			4	0	-.244	0	-1.997e-3	NC	NC
180			5	0	-.241	0	-1.997e-3	NC	NC
181	1	M37	1	0	-.258	0	-7.953e-4	NC	NC
182			2	0	-.261	0	-7.953e-4	NC	NC
183			3	0	-.263	0	-7.953e-4	NC	NC
184			4	0	-.261	0	-7.953e-4	NC	NC
185			5	0	-.258	0	-7.953e-4	NC	NC
186	1	M38	1	0	-.26	0	3.573e-4	NC	NC
187			2	0	-.264	0	3.573e-4	NC	NC
188			3	0	-.265	0	3.573e-4	NC	NC
189			4	0	-.264	0	3.573e-4	NC	NC
190			5	0	-.26	0	3.573e-4	NC	NC
191	1	M39	1	0	-.25	0	1.433e-3	NC	NC
192			2	0	-.253	0	1.433e-3	NC	NC
193			3	0	-.255	0	1.433e-3	NC	NC
194			4	0	-.253	0	1.433e-3	NC	NC
195			5	0	-.25	0	1.433e-3	NC	NC
196	1	M40	1	0	-.226	0	2.395e-3	NC	NC
197			2	0	-.23	0	2.395e-3	NC	NC
198			3	0	-.231	0	2.395e-3	NC	NC
199			4	0	-.23	0	2.395e-3	NC	NC
200			5	0	-.226	0	2.395e-3	NC	NC
201	1	M41	1	0	-.193	0	3.191e-3	NC	NC
202			2	0	-.196	0	3.191e-3	NC	NC
203			3	0	-.198	0	3.191e-3	NC	NC
204			4	0	-.196	0	3.191e-3	NC	NC
205			5	0	-.193	0	3.191e-3	NC	NC
206	1	M42	1	0	-.15	0	3.782e-3	NC	NC
207			2	0	-.154	0	3.782e-3	NC	NC
208			3	0	-.155	0	3.782e-3	NC	NC
209			4	0	-.154	0	3.782e-3	NC	NC
210			5	0	-.15	0	3.782e-3	NC	NC
211	1	M43	1	0	-.102	0	4.269e-3	NC	NC

Member Section Deflections (Continued)

	LC	Member Label	Sec	x [in]	y [in]	z [in]	x Rotate[rad]	(n) L/y Ratio	(n) L/z Ratio
212			2	0	-.105	0	4.269e-3	NC	NC
213			3	0	-.107	0	4.269e-3	NC	NC
214			4	0	-.105	0	4.269e-3	NC	NC
215			5	0	-.102	0	4.269e-3	NC	NC
216	1	M44	1	0	-.048	0	4.703e-3	NC	NC
217			2	0	-.052	0	4.703e-3	NC	NC
218			3	0	-.054	0	4.703e-3	NC	NC
219			4	0	-.052	0	4.703e-3	NC	NC
220			5	0	-.048	0	4.703e-3	NC	NC
221	1	M45	1	0	.049	0	-1.054e-3	NC	NC
222			2	0	.046	0	-1.054e-3	NC	NC
223			3	0	.044	0	-1.054e-3	NC	NC
224			4	0	.046	0	-1.054e-3	NC	NC
225			5	0	.049	0	-1.054e-3	NC	NC
226	1	M46	1	0	.062	0	-9.422e-4	NC	NC
227			2	0	.058	0	-9.422e-4	NC	NC
228			3	0	.057	0	-9.422e-4	NC	NC
229			4	0	.058	0	-9.422e-4	NC	NC
230			5	0	.062	0	-9.422e-4	NC	NC
231	1	M47	1	0	.069	0	-1.132e-4	NC	NC
232			2	0	.066	0	-1.132e-4	NC	NC
233			3	0	.064	0	-1.132e-4	NC	NC
234			4	0	.066	0	-1.132e-4	NC	NC
235			5	0	.069	0	-1.132e-4	NC	NC
236	1	M48	1	0	.052	-.183	-8.591e-4	NC	NC
237			2	0	.045	-.183	-8.591e-4	NC	NC
238			3	0	.043	-.183	-8.591e-4	NC	NC
239			4	0	.045	-.183	-8.591e-4	NC	NC
240			5	0	.052	-.183	-8.591e-4	NC	NC
241	1	M49	1	0	.059	-.183	-4.177e-4	NC	NC
242			2	0	.052	-.183	-4.177e-4	NC	NC
243			3	0	.05	-.183	-4.177e-4	NC	NC
244			4	0	.052	-.183	-4.177e-4	NC	NC
245			5	0	.059	-.183	-4.177e-4	NC	NC
246	1	M50	1	0	.061	-.183	-8.601e-5	NC	NC
247			2	0	.055	-.183	-8.601e-5	NC	NC
248			3	0	.052	-.183	-8.601e-5	NC	NC
249			4	0	.055	-.183	-8.601e-5	NC	NC
250			5	0	.061	-.183	-8.601e-5	NC	NC
251	1	M51	1	.039	.183	0	0	NC	NC
252			2	.038	.171	-.004	0	3147.93	NC
253			3	.038	.099	-.003	0	NC	NC
254			4	.038	.023	0	0	4657.685	NC
255			5	.038	0	0	0	NC	NC
256	1	M52	1	.018	.183	0	-9.809e-8	NC	NC
257			2	.019	.182	-.005	-3.574e-8	2419.3	NC
258			3	.02	.104	-.003	0	8492.78	NC
259			4	.021	.02	0	8.894e-8	4224.364	NC
260			5	.022	0	0	1.513e-7	NC	NC
261	1	M53	1	-.015	.183	0	0	591.32	NC
262			2	-.011	.187	-.005	0	578.166	NC
263			3	-.007	.091	-.003	0	1189.89	NC
264			4	-.004	-.005	0	0	NC	NC
265			5	0	0	0	0	NC	NC
266	1	M54	1	-.061	.183	0	0	591.301	NC
267			2	-.06	.19	-.005	0	568.925	NC
268			3	-.059	.077	-.003	0	1398.995	NC

Member Section Deflections (Continued)

	LC	Member Label	Sec	x [in]	y [in]	z [in]	x Rotate[rad]	(n) L/y Ratio	(n) L/z Ratio
269			4	-.059	-.028	0	0	3806.556	NC
270			5	-.058	0	0	0	NC	NC
271	1	M55	1	-.114	.183	0	5.783e-8	591.264	NC
272			2	-.114	.197	-.006	0	549.02	NC
273			3	-.114	.089	-.004	0	1208.998	NC
274			4	-.114	-.017	0	0	6332.749	NC
275			5	-.115	0	0	-6.041e-8	NC	NC
276	1	M56	1	-.166	.183	0	5.884e-8	591.211	NC
277			2	-.166	.194	-.033	0	557.877	3226.602
278			3	-.166	.091	-.029	0	1189.218	3767.95
279			4	-.166	-.012	-.01	-3.228e-8	9232.36	NC
280			5	-.166	0	0	-6.266e-8	NC	NC
281	1	M57	1	-.209	.183	0	0	591.141	NC
282			2	-.209	.185	-.035	0	582.924	3125.181
283			3	-.209	.091	-.03	0	1188.291	3644.101
284			4	-.209	-.003	-.01	0	NC	NC
285			5	-.209	0	0	0	NC	NC
286	1	M58	1	-.241	.183	0	-6.048e-8	NC	NC
287			2	-.241	.174	-.033	0	2892.324	3225.34
288			3	-.241	.091	-.029	0	NC	3766.404
289			4	-.241	.008	-.01	0	2892.521	NC
290			5	-.241	0	0	6.17e-8	NC	NC
291	1	M59	1	-.257	.183	0	-5.839e-8	NC	NC
292			2	-.258	.163	-.006	0	4229.333	NC
293			3	-.258	.092	-.004	0	NC	NC
294			4	-.258	.021	0	3.209e-8	4309.699	NC
295			5	-.258	0	0	6.225e-8	NC	NC
296	1	M60	1	-.26	.183	0	0	NC	NC
297			2	-.26	.151	-.005	0	7735.596	NC
298			3	-.26	.092	-.003	0	NC	NC
299			4	-.26	.032	0	0	8080.61	NC
300			5	-.26	0	0	0	NC	NC
301	1	M61	1	-.249	.183	0	0	NC	NC
302			2	-.249	.14	-.005	0	NC	NC
303			3	-.25	.092	-.003	0	NC	NC
304			4	-.25	.043	0	0	NC	NC
305			5	-.25	0	0	0	NC	NC
306	1	M62	1	-.226	.183	0	0	NC	NC
307			2	-.226	.131	-.005	0	NC	NC
308			3	-.226	.092	-.003	0	NC	NC
309			4	-.226	.053	0	0	NC	NC
310			5	-.226	0	0	0	NC	NC
311	1	M63	1	-.192	.183	0	0	NC	NC
312			2	-.192	.123	-.005	0	7394.279	NC
313			3	-.193	.092	-.003	0	NC	NC
314			4	-.193	.061	0	0	7035.777	NC
315			5	-.193	0	0	0	NC	NC
316	1	M64	1	-.15	.183	0	0	NC	NC
317			2	-.15	.117	-.005	0	5230.25	NC
318			3	-.15	.092	-.003	0	NC	NC
319			4	-.15	.067	0	0	5070.005	NC
320			5	-.15	0	0	0	NC	NC
321	1	M65	1	-.102	.183	0	-9.508e-8	NC	NC
322			2	-.102	.114	-.005	-1.17e-7	4611.805	NC
323			3	-.102	.094	-.003	-1.389e-7	NC	NC
324			4	-.102	.073	0	-1.608e-7	4008.333	NC
325			5	-.102	0	0	-1.827e-7	NC	NC

Member Section Deflections (Continued)

	LC	Member Label	Sec	x [in]	y [in]	z [in]	x Rotate[rad]	(n) L/y Ratio	(n) L/z Ratio
326	1	M66	1	-.051	.183	0	-4.91e-7	NC	NC
327			2	-.05	.115	-.005	7.598e-8	4923.8	NC
328			3	-.049	.099	-.003	6.43e-7	NC	NC
329			4	-.048	.079	0	1.21e-6	3243.121	NC
330			5	-.048	0	0	1.777e-6	NC	NC
331	1	M67	1	-.051	.183	0	4.888e-7	NC	NC
332			2	-.05	.115	.005	-7.764e-8	4923.793	NC
333			3	-.049	.099	.003	-6.441e-7	NC	NC
334			4	-.048	.079	0	-1.21e-6	3243.118	NC
335			5	-.048	0	0	-1.777e-6	NC	NC
336	1	M68	1	-.102	.183	0	9.286e-8	NC	NC
337			2	-.102	.114	.005	1.153e-7	4611.8	NC
338			3	-.102	.094	.003	1.378e-7	NC	NC
339			4	-.102	.073	0	1.603e-7	4008.329	NC
340			5	-.102	0	0	1.828e-7	NC	NC
341	1	M69	1	-.15	.183	0	0	NC	NC
342			2	-.15	.117	.005	0	5230.245	NC
343			3	-.15	.092	.003	0	NC	NC
344			4	-.15	.067	0	0	5070	NC
345			5	-.15	0	0	0	NC	NC
346	1	M70	1	-.192	.183	0	0	NC	NC
347			2	-.192	.123	.005	0	7394.27	NC
348			3	-.193	.092	.003	0	NC	NC
349			4	-.193	.061	0	0	7035.769	NC
350			5	-.193	0	0	0	NC	NC
351	1	M71	1	-.226	.183	0	0	NC	NC
352			2	-.226	.131	.005	0	NC	NC
353			3	-.226	.092	.003	0	NC	NC
354			4	-.226	.053	0	0	NC	NC
355			5	-.226	0	0	0	NC	NC
356	1	M72	1	-.249	.183	0	0	NC	NC
357			2	-.249	.14	.005	0	NC	NC
358			3	-.25	.092	.003	0	NC	NC
359			4	-.25	.043	0	0	NC	NC
360			5	-.25	0	0	0	NC	NC
361	1	M73	1	-.26	.183	0	0	NC	NC
362			2	-.26	.151	.005	0	7735.602	NC
363			3	-.26	.092	.003	0	NC	NC
364			4	-.26	.032	0	0	8080.616	NC
365			5	-.26	0	0	0	NC	NC
366	1	M74	1	-.257	.183	0	5.627e-8	NC	NC
367			2	-.258	.163	.006	0	4229.334	NC
368			3	-.258	.092	.004	0	NC	NC
369			4	-.258	.021	0	-3.264e-8	4309.7	NC
370			5	-.258	0	0	-6.227e-8	NC	NC
371	1	M75	1	-.241	.183	0	5.836e-8	NC	NC
372			2	-.241	.174	.033	0	2892.325	3225.34
373			3	-.241	.091	.029	0	NC	3766.404
374			4	-.241	.008	.01	-3.17e-8	2892.522	NC
375			5	-.241	0	0	-6.173e-8	NC	NC
376	1	M76	1	-.209	.183	0	0	591.141	NC
377			2	-.209	.185	.035	0	582.925	3125.181
378			3	-.209	.091	.03	0	1188.292	3644.101
379			4	-.209	-.003	.01	0	NC	NC
380			5	-.209	0	0	0	NC	NC
381	1	M77	1	-.166	.183	0	-6.096e-8	591.211	NC
382			2	-.166	.194	.033	0	557.878	3226.602

Member Section Deflections (Continued)

	LC	Member Label	Sec	x [in]	y [in]	z [in]	x Rotate[rad]	(n) L/y Ratio	(n) L/z Ratio
383			3	-.166	.091	.029	0	1189.219	3767.95
384			4	-.166	-.012	.01	3.173e-8	9232.336	NC
385			5	-.166	0	0	6.263e-8	NC	NC
386	1	M78	1	-.114	.183	0	-5.996e-8	591.265	NC
387			2	-.114	.197	.006	0	549.02	NC
388			3	-.114	.089	.004	0	1208.999	NC
389			4	-.114	-.017	0	0	6332.738	NC
390			5	-.115	0	0	6.037e-8	NC	NC
391	1	M79	1	-.061	.183	0	0	591.301	NC
392			2	-.06	.19	.005	0	568.926	NC
393			3	-.059	.077	.003	0	1398.996	NC
394			4	-.059	-.028	0	0	3806.553	NC
395			5	-.058	0	0	0	NC	NC
396	1	M80	1	-.015	.183	0	0	591.32	NC
397			2	-.011	.187	.005	0	578.167	NC
398			3	-.007	.091	.003	0	1189.891	NC
399			4	-.004	-.005	0	0	NC	NC
400			5	0	0	0	0	NC	NC
401	1	M81	1	.018	.183	0	9.59e-8	NC	NC
402			2	.019	.182	.005	3.398e-8	2419.301	NC
403			3	.02	.104	.003	0	8492.779	NC
404			4	.021	.02	0	-8.986e-8	4224.367	NC
405			5	.022	0	0	-1.518e-7	NC	NC
406	1	M82	1	.039	.183	0	0	NC	NC
407			2	.038	.171	.004	0	3147.932	NC
408			3	.038	.099	.003	0	NC	NC
409			4	.038	.023	0	0	4657.69	NC
410			5	.038	0	0	0	NC	NC
411	1	M83	1	.011	0	0	-2.452e-5	NC	NC
412			2	.011	.042	.01	-1.645e-5	2560.953	NC
413			3	.011	.078	.002	-8.373e-6	1376.04	NC
414			4	.011	.121	-.007	-2.976e-7	889.794	NC
415			5	.011	.183	0	7.778e-6	589.274	NC
416	1	M84	1	.02	0	0	-2.57e-5	NC	NC
417			2	.02	.044	.007	-1.709e-5	2439.481	NC
418			3	.02	.085	0	-8.48e-6	1263.575	NC
419			4	.02	.129	-.006	1.31e-7	831.669	NC
420			5	.02	.183	0	8.742e-6	587.935	NC
421	1	M85	1	.027	0	0	-1.975e-5	NC	NC
422			2	.027	.044	.005	-1.31e-5	2384.182	NC
423			3	.027	.088	0	-6.442e-6	1214.743	NC
424			4	.027	.133	-.005	2.146e-7	805.489	NC
425			5	.027	.183	0	6.871e-6	586.738	NC
426	1	M86	1	.031	0	0	-1.052e-5	NC	NC
427			2	.031	.045	.002	-6.966e-6	2359.933	NC
428			3	.031	.089	0	-3.413e-6	1193.719	NC
429			4	.031	.135	-.002	1.389e-7	793.968	NC
430			5	.031	.183	0	3.691e-6	585.946	NC
431	1	M87	1	.033	-.001	0	0	NC	NC
432			2	.032	.045	0	0	2353.073	NC
433			3	.032	.09	0	0	1187.807	NC
434			4	.032	.136	0	0	790.692	NC
435			5	.032	.183	0	0	585.672	NC
436	1	M88	1	.031	0	0	1.052e-5	NC	NC
437			2	.031	.045	-.002	6.966e-6	2359.933	NC
438			3	.031	.089	0	3.415e-6	1193.719	NC
439			4	.031	.135	.002	-1.367e-7	793.968	NC

Member Section Deflections (Continued)

	LC	Member Label	Sec	x [in]	y [in]	z [in]	x Rotate[rad]	(n) L/y Ratio	(n) L/z Ratio
440			5	.031	.183	0	-3.688e-6	585.946	NC
441	1	M89	1	.027	0	0	1.975e-5	NC	NC
442			2	.027	.044	-.005	1.31e-5	2384.182	NC
443			3	.027	.088	0	6.443e-6	1214.743	NC
444			4	.027	.133	.005	-2.124e-7	805.488	NC
445			5	.027	.183	0	-6.868e-6	586.738	NC
446	1	M90	1	.02	0	0	2.57e-5	NC	NC
447			2	.02	.044	-.007	1.709e-5	2439.48	NC
448			3	.02	.085	0	8.481e-6	1263.575	NC
449			4	.02	.129	.006	-1.289e-7	831.669	NC
450			5	.02	.183	0	-8.739e-6	587.935	NC
451	1	M91	1	.011	0	0	2.452e-5	NC	NC
452			2	.011	.042	-.01	1.645e-5	2560.953	NC
453			3	.011	.078	-.002	8.374e-6	1376.039	NC
454			4	.011	.121	.007	2.995e-7	889.793	NC
455			5	.011	.183	0	-7.775e-6	589.274	NC

Member Section Stresses

	LC	Member Label	Sec	Axial[ksi]	y Shear[ksi]	z Shear[ksi]	y top Bending[ksi]	y bot Bend..	z top Bend..	z bot Bend...
1	1	M1	1	-.001	1.055	-.005	-14.613	14.613	.063	-.063
2			2	.014	.042	0	2.253	-2.253	0	0
3			3	-.006	-.128	0	2.983	-2.983	0	0
4			4	.168	.809	0	1.878	-1.878	0	0
5			5	.12	-.223	0	-6.451	6.451	.002	-.002
6	1	M2	1	-.016	.028	0	-.647	.647	-.001	.001
7			2	-.016	.014	0	.127	-.127	-.001	.001
8			3	-.016	0	0	.385	-.385	-.001	.001
9			4	-.016	-.014	0	.127	-.127	-.001	.001
10			5	-.016	-.028	0	-.647	.647	-.001	.001
11	1	M3	1	.12	.223	0	-6.451	6.451	.002	-.002
12			2	.168	-.809	0	1.878	-1.878	0	0
13			3	-.006	.128	0	2.983	-2.983	0	0
14			4	.014	-.042	0	2.253	-2.253	0	0
15			5	-.001	-1.055	.005	-14.613	14.613	.063	-.063
16	1	M4	1	-.002	.262	.003	-3.045	3.045	-.063	.063
17			2	0	.002	0	.528	-.528	.014	-.014
18			3	.001	0	0	.588	-.588	.026	-.026
19			4	0	-.002	0	.528	-.528	.014	-.014
20			5	-.002	-.262	-.003	-3.045	3.045	-.063	.063
21	1	M5	1	-.411	-.201	.012	1.25	-1.25	3.513	-3.883
22			2	-.404	-.201	.012	-.013	.013	1.29	-1.426
23			3	-.396	-.201	.012	-1.275	1.275	-.933	1.031
24			4	-.388	-.201	.012	-2.538	2.538	-3.155	3.488
25			5	-.381	-.201	.012	-3.801	3.801	-5.378	5.945
26	1	M6	1	-.411	.012	-.201	-1.25	1.25	3.513	-3.883
27			2	-.404	.012	-.201	.013	-.013	1.29	-1.426
28			3	-.396	.012	-.201	1.275	-1.275	-.933	1.031
29			4	-.388	.012	-.201	2.538	-2.538	-3.155	3.488
30			5	-.381	.012	-.201	3.801	-3.801	-5.378	5.945
31	1	M7	1	.064	.015	-.116	-.601	.601	1.483	-1.64
32			2	.072	.015	-.116	.178	-.178	.309	-.342
33			3	.079	.015	-.116	.956	-.956	-.865	.956
34			4	.087	.015	-.116	1.735	-1.735	-2.039	2.254
35			5	.095	.015	-.116	2.514	-2.514	-3.213	3.552
36	1	M8	1	.064	-.116	.015	.601	-.601	1.483	-1.64
37			2	.072	-.116	.015	-.178	.178	.309	-.342

Member Section Stresses (Continued)

	LC	Member Label	Sec	Axial[ksi]	y Shear[ksi]	z Shear[ksi]	y top Bending[ksi]	y bot Bend..	z top Bend..	z bot Bend...
38			3	.079	-.116	.015	-.956	.956	-.865	.956
39			4	.087	-.116	.015	-1.735	1.735	-2.039	2.254
40			5	.095	-.116	.015	-2.514	2.514	-3.213	3.552
41	1	M9	1	-.06	.571	.001	-2.36	2.36	-.02	.009
42			2	-.064	.476	0	6.441	-6.441	0	0
43			3	-.061	-.976	0	7.336	-7.336	0	0
44			4	-.048	.659	0	-6.876	6.876	0	0
45			5	-.034	.2	0	-1.485	1.485	0	0
46	1	M10	1	.006	.059	0	.484	-.484	0	0
47			2	.006	.03	0	.881	-.881	0	0
48			3	.006	0	0	1.014	-1.014	0	0
49			4	.006	-.03	0	.881	-.881	0	0
50			5	.006	-.059	0	.484	-.484	0	0
51	1	M11	1	-.034	-.2	0	-1.485	1.485	0	0
52			2	-.048	-.659	0	-6.876	6.876	0	0
53			3	-.061	.976	0	7.336	-7.336	0	0
54			4	-.064	-.476	0	6.441	-6.441	0	0
55			5	-.06	-.571	-.001	-2.36	2.36	-.02	.009
56	1	M12	1	.004	.048	-.002	.583	-.583	.047	-.018
57			2	.003	.093	0	1.343	-1.343	-.008	.003
58			3	.002	-.008	0	1.733	-1.733	-.017	.006
59			4	.003	-.093	0	1.343	-1.343	-.008	.003
60			5	.004	-.048	.002	.583	-.583	.047	-.018
61	1	M13	1	.001	.091	0	.022	-.022	0	0
62			2	.001	.046	0	.636	-.636	0	0
63			3	.001	0	0	.841	-.841	0	0
64			4	.001	-.046	0	.636	-.636	0	0
65			5	.001	-.091	0	.022	-.022	0	0
66	1	M14	1	0	.091	0	-.005	.005	0	0
67			2	0	.046	0	.609	-.609	0	0
68			3	0	0	0	.813	-.813	0	0
69			4	0	-.046	0	.609	-.609	0	0
70			5	0	-.091	0	-.005	.005	0	0
71	1	M15	1	0	.091	0	-.006	.006	0	0
72			2	0	.046	0	.608	-.608	0	0
73			3	0	0	0	.812	-.812	0	0
74			4	0	-.046	0	.608	-.608	0	0
75			5	0	-.091	0	-.006	.006	0	0
76	1	M16	1	0	.091	0	-.006	.006	0	0
77			2	0	.046	0	.608	-.608	0	0
78			3	0	0	0	.812	-.812	0	0
79			4	0	-.046	0	.608	-.608	0	0
80			5	0	-.091	0	-.006	.006	0	0
81	1	M17	1	0	.091	0	-.006	.006	0	0
82			2	0	.046	0	.608	-.608	0	0
83			3	0	0	0	.812	-.812	0	0
84			4	0	-.046	0	.608	-.608	0	0
85			5	0	-.091	0	-.006	.006	0	0
86	1	M18	1	0	.091	0	-.006	.006	0	0
87			2	0	.046	0	.608	-.608	0	0
88			3	0	0	0	.812	-.812	0	0
89			4	0	-.046	0	.608	-.608	0	0
90			5	0	-.091	0	-.006	.006	0	0
91	1	M19	1	0	.091	0	-.002	.002	0	0
92			2	0	.046	0	.612	-.612	0	0
93			3	0	0	0	.817	-.817	0	0
94			4	0	-.046	0	.612	-.612	0	0

Company : JVA Consulting Engineers, Inc.
Designer : Kari Rogne
Job Number : Solar D. Garage shipping

Aug 5, 2007
6:43 PM
Checked By:_____

Member Section Stresses (Continued)

	LC	Member Label	Sec	Axial[ksi]	y Shear[ksi]	z Shear[ksi]	y top Bending[ksi]	y bot Bend..	z top Bend..	z bot Bend..
95			5	0	-.091	0	-.002	.002	0	0
96	1	M20	1	0	.091	0	.105	-.105	0	0
97			2	0	.046	0	.719	-.719	0	0
98			3	0	0	0	.923	-.923	0	0
99			4	0	-.046	0	.719	-.719	0	0
100			5	0	-.091	0	.105	-.105	0	0
101	1	M21	1	0	.57	0	-.145	.145	0	0
102			2	0	.285	0	3.681	-3.681	0	0
103			3	0	0	0	4.957	-4.957	0	0
104			4	0	-.285	0	3.681	-3.681	0	0
105			5	0	-.57	0	-.145	.145	0	0
106	1	M22	1	0	.57	0	-.043	.043	0	0
107			2	0	.285	0	3.783	-3.783	0	0
108			3	0	0	0	5.059	-5.059	0	0
109			4	0	-.285	0	3.783	-3.783	0	0
110			5	0	-.57	0	-.043	.043	0	0
111	1	M23	1	0	.57	0	-.147	.147	0	0
112			2	0	.285	0	3.68	-3.68	0	0
113			3	0	0	0	4.955	-4.955	0	0
114			4	0	-.285	0	3.68	-3.68	0	0
115			5	0	-.57	0	-.147	.147	0	0
116	1	M24	1	0	.086	0	.106	-.106	0	0
117			2	0	.043	0	.684	-.684	0	0
118			3	0	0	0	.877	-.877	0	0
119			4	0	-.043	0	.684	-.684	0	0
120			5	0	-.086	0	.106	-.106	0	0
121	1	M25	1	0	.086	0	-.001	.001	0	0
122			2	0	.043	0	.576	-.576	0	0
123			3	0	0	0	.769	-.769	0	0
124			4	0	-.043	0	.576	-.576	0	0
125			5	0	-.086	0	-.001	.001	0	0
126	1	M26	1	0	.086	0	-.006	.006	0	0
127			2	0	.043	0	.572	-.572	0	0
128			3	0	0	0	.764	-.764	0	0
129			4	0	-.043	0	.572	-.572	0	0
130			5	0	-.086	0	-.006	.006	0	0
131	1	M27	1	0	.086	0	-.008	.008	0	0
132			2	0	.043	0	.57	-.57	0	0
133			3	0	0	0	.763	-.763	0	0
134			4	0	-.043	0	.57	-.57	0	0
135			5	0	-.086	0	-.008	.008	0	0
136	1	M28	1	0	.086	0	-.051	.051	0	0
137			2	0	.043	0	.527	-.527	0	0
138			3	0	0	0	.72	-.72	0	0
139			4	0	-.043	0	.527	-.527	0	0
140			5	0	-.086	0	-.051	.051	0	0
141	1	M29	1	.001	.032	0	-.029	.029	0	0
142			2	.001	.016	0	.188	-.188	0	0
143			3	.001	0	0	.261	-.261	0	0
144			4	.001	-.016	0	.188	-.188	0	0
145			5	.001	-.032	0	-.029	.029	0	0
146	1	M30	1	0	.032	0	-.007	.007	0	0
147			2	0	.016	0	.21	-.21	0	0
148			3	0	0	0	.282	-.282	0	0
149			4	0	-.016	0	.21	-.21	0	0
150			5	0	-.032	0	-.007	.007	0	0
151	1	M31	1	0	.032	0	-.005	.005	0	0

Company : JVA Consulting Engineers, Inc.
Designer : Kari Rogne
Job Number : Solar D. Garage shipping

Aug 5, 2007
6:43 PM
Checked By:_____

Member Section Stresses (Continued)

	LC	Member Label	Sec	Axial[ksi]	y Shear[ksi]	z Shear[ksi]	y top Bending[ksi]	y bot Bend..	z top Bend..	z bot Bend...
152			2	0	.016	0	.212	-.212	0	0
153			3	0	0	0	.284	-.284	0	0
154			4	0	-.016	0	.212	-.212	0	0
155			5	0	-.032	0	-.005	.005	0	0
156	1	M32	1	0	.032	0	-.005	.005	0	0
157			2	0	.016	0	.212	-.212	0	0
158			3	0	0	0	.284	-.284	0	0
159			4	0	-.016	0	.212	-.212	0	0
160			5	0	-.032	0	-.005	.005	0	0
161	1	M33	1	0	.032	0	-.006	.006	0	0
162			2	0	.016	0	.211	-.211	0	0
163			3	0	0	0	.283	-.283	0	0
164			4	0	-.016	0	.211	-.211	0	0
165			5	0	-.032	0	-.006	.006	0	0
166	1	M34	1	0	.032	0	-.017	.017	0	0
167			2	0	.016	0	.2	-.2	0	0
168			3	0	0	0	.272	-.272	0	0
169			4	0	-.016	0	.2	-.2	0	0
170			5	0	-.032	0	-.017	.017	0	0
171	1	M35	1	0	.032	0	-.018	.018	0	0
172			2	0	.016	0	.199	-.199	0	0
173			3	0	0	0	.271	-.271	0	0
174			4	0	-.016	0	.199	-.199	0	0
175			5	0	-.032	0	-.018	.018	0	0
176	1	M36	1	0	.032	0	-.017	.017	0	0
177			2	0	.016	0	.2	-.2	0	0
178			3	0	0	0	.272	-.272	0	0
179			4	0	-.016	0	.2	-.2	0	0
180			5	0	-.032	0	-.017	.017	0	0
181	1	M37	1	0	.032	0	-.006	.006	0	0
182			2	0	.016	0	.211	-.211	0	0
183			3	0	0	0	.283	-.283	0	0
184			4	0	-.016	0	.211	-.211	0	0
185			5	0	-.032	0	-.006	.006	0	0
186	1	M38	1	0	.032	0	-.005	.005	0	0
187			2	0	.016	0	.212	-.212	0	0
188			3	0	0	0	.284	-.284	0	0
189			4	0	-.016	0	.212	-.212	0	0
190			5	0	-.032	0	-.005	.005	0	0
191	1	M39	1	0	.032	0	-.005	.005	0	0
192			2	0	.016	0	.212	-.212	0	0
193			3	0	0	0	.285	-.285	0	0
194			4	0	-.016	0	.212	-.212	0	0
195			5	0	-.032	0	-.005	.005	0	0
196	1	M40	1	0	.032	0	-.005	.005	0	0
197			2	0	.016	0	.212	-.212	0	0
198			3	0	0	0	.285	-.285	0	0
199			4	0	-.016	0	.212	-.212	0	0
200			5	0	-.032	0	-.005	.005	0	0
201	1	M41	1	0	.032	0	-.004	.004	0	0
202			2	0	.016	0	.212	-.212	0	0
203			3	0	0	0	.285	-.285	0	0
204			4	0	-.016	0	.212	-.212	0	0
205			5	0	-.032	0	-.004	.004	0	0
206	1	M42	1	0	.032	0	-.004	.004	0	0
207			2	0	.016	0	.213	-.213	0	0
208			3	0	0	0	.285	-.285	0	0

Member Section Stresses (Continued)

	LC	Member Label	Sec	Axial[ksi]	y Shear[ksi]	z Shear[ksi]	y top Bending[ksi]	y bot Bend..	z top Bend..	z bot Bend...
209			4	0	-.016	0	.213	-.213	0	0
210			5	0	-.032	0	-.004	.004	0	0
211	1	M43	1	0	.032	0	.001	-.001	0	0
212			2	0	.016	0	.218	-.218	0	0
213			3	0	0	0	.29	-.29	0	0
214			4	0	-.016	0	.218	-.218	0	0
215			5	0	-.032	0	.001	-.001	0	0
216	1	M44	1	-.001	.032	0	.051	-.051	.002	0
217			2	-.001	.016	0	.267	-.267	.002	0
218			3	-.001	0	0	.34	-.34	.002	0
219			4	-.001	-.016	0	.267	-.267	.002	0
220			5	-.001	-.032	0	.051	-.051	.002	0
221	1	M45	1	0	.032	0	-.003	.003	0	0
222			2	0	.016	0	.214	-.214	0	0
223			3	0	0	0	.286	-.286	0	0
224			4	0	-.016	0	.214	-.214	0	0
225			5	0	-.032	0	-.003	.003	0	0
226	1	M46	1	0	.032	0	-.001	.001	0	0
227			2	0	.016	0	.216	-.216	0	0
228			3	0	0	0	.288	-.288	0	0
229			4	0	-.016	0	.216	-.216	0	0
230			5	0	-.032	0	-.001	.001	0	0
231	1	M47	1	0	.032	0	-.007	.007	-.001	0
232			2	0	.016	0	.209	-.209	-.001	0
233			3	0	0	0	.282	-.282	-.001	0
234			4	0	-.016	0	.209	-.209	-.001	0
235			5	0	-.032	0	-.007	.007	-.001	0
236	1	M48	1	0	.059	0	.005	-.005	0	0
237			2	0	.03	0	.402	-.402	0	0
238			3	0	0	0	.534	-.534	0	0
239			4	0	-.03	0	.402	-.402	0	0
240			5	0	-.059	0	.005	-.005	0	0
241	1	M49	1	0	.059	0	.001	-.001	0	0
242			2	0	.03	0	.398	-.398	0	0
243			3	0	0	0	.531	-.531	0	0
244			4	0	-.03	0	.398	-.398	0	0
245			5	0	-.059	0	.001	-.001	0	0
246	1	M50	1	0	.059	0	.02	-.02	0	0
247			2	0	.03	0	.417	-.417	0	0
248			3	0	0	0	.55	-.55	0	0
249			4	0	-.03	0	.417	-.417	0	0
250			5	0	-.059	0	.02	-.02	0	0
251	1	M51	1	.307	.068	-.005	-4.722	4.722	.403	-.403
252			2	.3	.068	-.005	-2.435	2.435	.229	-.229
253			3	.292	.068	-.005	-.147	.147	.055	-.055
254			4	.284	.068	-.005	2.14	-2.14	-.118	.118
255			5	.277	.068	-.005	4.427	-4.427	-.292	.292
256	1	M52	1	-1.02	.013	0	-2.919	2.919	.222	-.222
257			2	-1.027	.013	0	-1.523	1.523	.126	-.126
258			3	-1.035	.013	0	-.126	.126	.03	-.03
259			4	-1.043	.013	0	1.27	-1.27	-.066	.066
260			5	-1.05	.013	0	2.666	-2.666	-.162	.162
261	1	M53	1	-3.978	.019	0	-3.991	3.991	.223	-.223
262			2	-3.986	.019	0	-1.993	1.993	.126	-.126
263			3	-3.993	.019	0	.006	-.006	.03	-.03
264			4	-4.001	.019	0	2.004	-2.004	-.067	.067
265			5	-4.009	.019	0	4.002	-4.002	-.164	.164

Company : JVA Consulting Engineers, Inc.
Designer : Kari Rogne
Job Number : Solar D. Garage shipping

Aug 5, 2007
6:43 PM
Checked By:_____

Member Section Stresses (Continued)

	LC	Member Label	Sec	Axial[ksi]	y Shear[ksi]	z Shear[ksi]	y top Bending[ksi]	y bot Bend..	z top Bend..	z bot Bend...
266	1	M54	1	-.857	.023	0	-4.907	4.907	.224	-.224
267			2	-.864	.023	0	-2.383	2.383	.127	-.127
268			3	-.872	.023	0	.14	-.14	.03	-.03
269			4	-.88	.023	0	2.664	-2.664	-.067	.067
270			5	-.887	.023	0	5.188	-5.188	-.164	.164
271	1	M55	1	.24	.023	-.001	-4.851	4.851	.264	-.264
272			2	.232	.023	-.001	-2.415	2.415	.152	-.152
273			3	.224	.023	-.001	.02	-.02	.04	-.04
274			4	.217	.023	-.001	2.455	-2.455	-.072	.072
275			5	.209	.023	-.001	4.891	-4.891	-.184	.184
276	1	M56	1	.107	.021	-.004	-4.528	4.528	1.238	-1.238
277			2	.099	.021	-.004	-2.261	2.261	.761	-.761
278			3	.092	.021	-.004	.005	-.005	.285	-.285
279			4	.084	.021	-.004	2.272	-2.272	-.191	.191
280			5	.076	.021	-.004	4.538	-4.538	-.668	.668
281	1	M57	1	.049	.018	-.005	-3.862	3.862	1.276	-1.276
282			2	.041	.018	-.005	-1.929	1.929	.785	-.785
283			3	.034	.018	-.005	.005	-.005	.295	-.295
284			4	.026	.018	-.005	1.938	-1.938	-.196	.196
285			5	.018	.018	-.005	3.871	-3.871	-.686	.686
286	1	M58	1	.049	.014	-.004	-2.971	2.971	1.238	-1.238
287			2	.042	.014	-.004	-1.485	1.485	.762	-.762
288			3	.034	.014	-.004	0	0	.285	-.285
289			4	.027	.014	-.004	1.485	-1.485	-.191	.191
290			5	.019	.014	-.004	2.971	-2.971	-.668	.668
291	1	M59	1	.079	.009	-.001	-2.016	2.016	.275	-.275
292			2	.072	.009	-.001	-1.01	1.01	.159	-.159
293			3	.064	.009	-.001	-.003	.003	.043	-.043
294			4	.056	.009	-.001	1.003	-1.003	-.073	.073
295			5	.049	.009	-.001	2.01	-2.01	-.189	.189
296	1	M60	1	.078	.005	0	-1.091	1.091	.236	-.236
297			2	.071	.005	0	-.547	.547	.135	-.135
298			3	.063	.005	0	-.004	.004	.033	-.033
299			4	.055	.005	0	.54	-.54	-.069	.069
300			5	.048	.005	0	1.083	-1.083	-.17	.17
301	1	M61	1	.078	.001	0	-.226	.226	.235	-.235
302			2	.07	.001	0	-.115	.115	.134	-.134
303			3	.062	.001	0	-.004	.004	.033	-.033
304			4	.055	.001	0	.107	-.107	-.069	.069
305			5	.047	.001	0	.218	-.218	-.17	.17
306	1	M62	1	.078	-.003	0	.545	-.545	.235	-.235
307			2	.07	-.003	0	.27	-.27	.134	-.134
308			3	.062	-.003	0	-.005	.005	.033	-.033
309			4	.055	-.003	0	-.28	.28	-.069	.069
310			5	.047	-.003	0	-.555	.555	-.17	.17
311	1	M63	1	.084	-.006	0	1.187	-1.187	.235	-.235
312			2	.076	-.006	0	.591	-.591	.134	-.134
313			3	.068	-.006	0	-.005	.005	.033	-.033
314			4	.061	-.006	0	-.601	.601	-.069	.069
315			5	.053	-.006	0	-1.197	1.197	-.17	.17
316	1	M64	1	.125	-.008	0	1.665	-1.665	.235	-.235
317			2	.118	-.008	0	.83	-.83	.134	-.134
318			3	.11	-.008	0	-.004	.004	.032	-.032
319			4	.102	-.008	0	-.839	.839	-.069	.069
320			5	.095	-.008	0	-1.673	1.673	-.17	.17
321	1	M65	1	.072	-.009	0	1.98	-1.98	.236	-.236
322			2	.064	-.009	0	.978	-.978	.134	-.134

Member Section Stresses (Continued)

	LC	Member Label	Sec	Axial[ksi]	y Shear[ksi]	z Shear[ksi]	y top Bending[ksi]	y bot Bend..	z top Bend..	z bot Bend...
323			3	.057	-.009	0	-.023	.023	.032	-.032
324			4	.049	-.009	0	-1.025	1.025	-.07	.07
325			5	.041	-.009	0	-2.027	2.027	-.172	.172
326	1	M66	1	-.835	-.01	-.001	2.122	-2.122	.255	-.255
327			2	-.842	-.01	-.001	1.023	-1.023	.143	-.143
328			3	-.85	-.01	-.001	-.075	.075	.03	-.03
329			4	-.858	-.01	-.001	-1.174	1.174	-.083	.083
330			5	-.865	-.01	-.001	-2.273	2.273	-.195	.195
331	1	M67	1	-.835	-.01	.001	2.122	-2.122	-.255	.255
332			2	-.842	-.01	.001	1.023	-1.023	-.143	.143
333			3	-.85	-.01	.001	-.075	.075	-.03	.03
334			4	-.858	-.01	.001	-1.174	1.174	.083	-.083
335			5	-.865	-.01	.001	-2.273	2.273	.195	-.195
336	1	M68	1	.072	-.009	0	1.98	-1.98	-.236	.236
337			2	.064	-.009	0	.978	-.978	-.134	.134
338			3	.057	-.009	0	-.023	.023	-.032	.032
339			4	.049	-.009	0	-1.025	1.025	.07	-.07
340			5	.041	-.009	0	-2.027	2.027	.172	-.172
341	1	M69	1	.125	-.008	0	1.665	-1.665	-.235	.235
342			2	.118	-.008	0	.83	-.83	-.134	.134
343			3	.11	-.008	0	-.004	.004	-.032	.032
344			4	.102	-.008	0	-.839	.839	.069	-.069
345			5	.095	-.008	0	-1.673	1.673	.17	-.17
346	1	M70	1	.084	-.006	0	1.187	-1.187	-.235	.235
347			2	.076	-.006	0	.591	-.591	-.134	.134
348			3	.068	-.006	0	-.005	.005	-.033	.033
349			4	.061	-.006	0	-.601	.601	.069	-.069
350			5	.053	-.006	0	-1.197	1.197	.17	-.17
351	1	M71	1	.078	-.003	0	.545	-.545	-.235	.235
352			2	.07	-.003	0	.27	-.27	-.134	.134
353			3	.062	-.003	0	-.005	.005	-.033	.033
354			4	.055	-.003	0	-.28	.28	.069	-.069
355			5	.047	-.003	0	-.555	.555	.17	-.17
356	1	M72	1	.078	.001	0	-.226	.226	-.235	.235
357			2	.07	.001	0	-.115	.115	-.134	.134
358			3	.062	.001	0	-.004	.004	-.033	.033
359			4	.055	.001	0	.107	-.107	.069	-.069
360			5	.047	.001	0	.218	-.218	.17	-.17
361	1	M73	1	.078	.005	0	-1.091	1.091	-.236	.236
362			2	.071	.005	0	-.547	.547	-.135	.135
363			3	.063	.005	0	-.004	.004	-.033	.033
364			4	.055	.005	0	.54	-.54	.069	-.069
365			5	.048	.005	0	1.083	-1.083	.17	-.17
366	1	M74	1	.079	.009	.001	-2.016	2.016	-.275	.275
367			2	.072	.009	.001	-1.01	1.01	-.159	.159
368			3	.064	.009	.001	-.003	.003	-.043	.043
369			4	.056	.009	.001	1.003	-1.003	.073	-.073
370			5	.049	.009	.001	2.01	-2.01	.189	-.189
371	1	M75	1	.049	.014	.004	-2.971	2.971	-1.238	1.238
372			2	.042	.014	.004	-1.485	1.485	-.762	.762
373			3	.034	.014	.004	0	0	-.285	.285
374			4	.027	.014	.004	1.485	-1.485	.191	-.191
375			5	.019	.014	.004	2.971	-2.971	.668	-.668
376	1	M76	1	.049	.018	.005	-3.862	3.862	-1.276	1.276
377			2	.041	.018	.005	-1.929	1.929	-.785	.785
378			3	.034	.018	.005	.005	-.005	-.295	.295
379			4	.026	.018	.005	1.938	-1.938	.196	-.196

Company : JVA Consulting Engineers, Inc.
Designer : Kari Rogne
Job Number : Solar D. Garage shipping

Aug 5, 2007
6:43 PM
Checked By:_____

Member Section Stresses (Continued)

	LC	Member Label	Sec	Axial[ksi]	y Shear[ksi]	z Shear[ksi]	y top Bending[ksi]	y bot Bend..	z top Bend..	z bot Bend..
380			5	.018	.018	.005	3.871	-3.871	.686	-.686
381	1	M77	1	.107	.021	.004	-4.528	4.528	-1.238	1.238
382			2	.099	.021	.004	-2.261	2.261	-.761	.761
383			3	.092	.021	.004	.005	-.005	-.285	.285
384			4	.084	.021	.004	2.272	-2.272	.191	-.191
385			5	.076	.021	.004	4.538	-4.538	.668	-.668
386	1	M78	1	.24	.023	.001	-4.851	4.851	-.264	.264
387			2	.232	.023	.001	-2.415	2.415	-.152	.152
388			3	.224	.023	.001	.02	-.02	-.04	.04
389			4	.217	.023	.001	2.455	-2.455	.072	-.072
390			5	.209	.023	.001	4.891	-4.891	.184	-.184
391	1	M79	1	-.857	.023	0	-4.907	4.907	-.224	.224
392			2	-.864	.023	0	-2.383	2.383	-.127	.127
393			3	-.872	.023	0	.14	-.14	-.03	.03
394			4	-.88	.023	0	2.664	-2.664	.067	-.067
395			5	-.887	.023	0	5.188	-5.188	.164	-.164
396	1	M80	1	-3.978	.019	0	-3.991	3.991	-.223	.223
397			2	-3.986	.019	0	-1.993	1.993	-.126	.126
398			3	-3.993	.019	0	.006	-.006	-.03	.03
399			4	-4.001	.019	0	2.004	-2.004	.067	-.067
400			5	-4.009	.019	0	4.002	-4.002	.164	-.164
401	1	M81	1	-1.02	.013	0	-2.919	2.919	-.222	.222
402			2	-1.027	.013	0	-1.523	1.523	-.126	.126
403			3	-1.035	.013	0	-.126	.126	-.03	.03
404			4	-1.043	.013	0	1.27	-1.27	.066	-.066
405			5	-1.05	.013	0	2.666	-2.666	.162	-.162
406	1	M82	1	.307	.068	.005	-4.722	4.722	-.403	.403
407			2	.3	.068	.005	-2.435	2.435	-.229	.229
408			3	.292	.068	.005	-.147	.147	-.055	.055
409			4	.284	.068	.005	2.14	-2.14	.118	-.118
410			5	.277	.068	.005	4.427	-4.427	.292	-.292
411	1	M83	1	-.239	.002	.003	-.364	.364	-.712	.712
412			2	-.231	.002	.003	-.117	.117	-.367	.367
413			3	-.224	.002	.003	.131	-.131	-.023	.023
414			4	-.216	.002	.003	.378	-.378	.322	-.322
415			5	-.208	.002	.003	.625	-.625	.666	-.666
416	1	M84	1	.01	.001	.002	-.186	.186	-.531	.531
417			2	.018	.001	.002	-.061	.061	-.267	.267
418			3	.026	.001	.002	.063	-.063	-.004	.004
419			4	.033	.001	.002	.188	-.188	.26	-.26
420			5	.041	.001	.002	.312	-.312	.523	-.523
421	1	M85	1	.012	0	.002	-.098	.098	-.365	.365
422			2	.019	0	.002	-.034	.034	-.182	.182
423			3	.027	0	.002	.031	-.031	0	0
424			4	.035	0	.002	.096	-.096	.183	-.183
425			5	.042	0	.002	.16	-.16	.366	-.366
426	1	M86	1	0	0	0	-.059	.059	-.19	.19
427			2	.008	0	0	-.021	.021	-.095	.095
428			3	.015	0	0	.017	-.017	0	0
429			4	.023	0	0	.054	-.054	.095	-.095
430			5	.031	0	0	.092	-.092	.19	-.19
431	1	M87	1	-.001	0	0	-.047	.047	0	0
432			2	.007	0	0	-.017	.017	0	0
433			3	.014	0	0	.013	-.013	0	0
434			4	.022	0	0	.043	-.043	0	0
435			5	.03	0	0	.073	-.073	0	0
436	1	M88	1	0	0	0	-.059	.059	.19	-.19

Member Section Stresses (Continued)

	LC	Member Label	Sec	Axial[ksi]	y Shear[ksi]	z Shear[ksi]	y top Bending[ksi]	y bot Bend..	z top Bend..	z bot Bend...
437			2	.008	0	0	-.021	.021	.095	-.095
438			3	.015	0	0	.017	-.017	0	0
439			4	.023	0	0	.054	-.054	-.095	.095
440			5	.031	0	0	.092	-.092	-.19	.19
441	1	M89	1	.012	0	-.002	-.098	.098	.365	-.365
442			2	.019	0	-.002	-.034	.034	.182	-.182
443			3	.027	0	-.002	.031	-.031	0	0
444			4	.035	0	-.002	.096	-.096	-.183	.183
445			5	.042	0	-.002	.16	-.16	-.366	.366
446	1	M90	1	.01	.001	-.002	-.186	.186	.531	-.531
447			2	.018	.001	-.002	-.061	.061	.267	-.267
448			3	.026	.001	-.002	.063	-.063	.004	-.004
449			4	.033	.001	-.002	.188	-.188	-.26	.26
450			5	.041	.001	-.002	.312	-.312	-.523	.523
451	1	M91	1	-.239	.002	-.003	-.364	.364	.712	-.712
452			2	-.231	.002	-.003	-.117	.117	.367	-.367
453			3	-.224	.002	-.003	.131	-.131	.023	-.023
454			4	-.216	.002	-.003	.378	-.378	-.322	.322
455			5	-.208	.002	-.003	.625	-.625	-.666	.666

Member AISC ASD Steel Code Checks

	LC	Member	Shape	UC Max	Loc[ft]	Shear UC	Loc[ft]	Dir	Fa[ksi]	Ft[ksi]	Fby[ksi]	Fbz[ksi]	Cb	Cmy	Cmz	Eqn
1	1	M1	HSS2X2X4	.618	0	.092	0	y	20.774	21.6	23.76	23.76	1.648	.598	.85	H2-1
2	1	M2	HSS2X2X4	.031	10	.002	10	y	5.128	21.6	21.6	21.6	1	.6	.85	H2-1
3	1	M3	HSS2X2X4	.618	20	.092	20	y	20.774	21.6	23.76	23.76	1.648	.598	.85	H2-1
4	1	M4	HSS2X2X4	.144	10	.024	0	y	5.128	21.6	21.6	21.6	1	1	.85	H2-1
5	1	M5	L6X6X5	.019	0	.014	0	y	12.507	21.6	- Code..					
6	1	M6	L6X6X5	.019	0	.014	0	z	12.507	21.6	- Code..					
7	1	M7	L6X6X5	.008	9	.008	0	z	12.507	21.6	- Code..					
8	1	M8	L6X6X5	.008	9	.008	0	y	12.507	21.6	- Code..					
9	1	M9	MC6X18	.546	13.958	.168	11.875	y	21.087	21.6	27	13.87	1	.609	.85	H1-3
10	1	M10	MC6X12	.065	5	.004	10	y	5.494	21.6	27	15.606	1	.6	.85	H1-2
11	1	M11	MC6X18	.546	6.042	.168	8.125	y	21.087	21.6	27	13.87	1	.609	.85	H1-3
12	1	M12	MC6X12	.111	5	.023	1.979	y	5.494	21.6	27	15.606	1	1	.85	H1-2
13	1	M13	MC6X12	.054	5	.006	10	y	5.494	21.6	27	15.606	1	.6	.85	H1-2
14	1	M14	MC6X12	.052	5	.006	10	y	5.494	21.6	27	15.606	1	.6	.85	H1-3
15	1	M15	MC6X12	.052	5	.006	10	y	5.494	21.6	27	15.606	1	.6	.85	H1-3
16	1	M16	MC6X12	.052	5	.006	10	y	5.494	21.6	27	15.606	1	.6	.85	H1-3
17	1	M17	MC6X12	.052	5	.006	10	y	5.494	21.6	27	15.606	1	.6	.85	H1-3
18	1	M18	MC6X12	.052	5	.006	0	y	5.494	21.6	27	15.606	1	.6	.85	H1-3
19	1	M19	MC6X12	.052	5	.006	10	y	5.494	21.6	27	15.606	1	.6	.85	H1-3
20	1	M20	MC6X12	.059	5	.006	10	y	5.494	21.6	27	15.606	1	.6	.85	H1-3
21	1	M21	MC6X12	.318	5	.040	10	y	5.494	21.6	27	15.606	1	.6	.85	H1-3
22	1	M22	MC6X12	.324	5	.040	0	y	5.494	21.6	27	15.606	1	.6	.85	H1-3
23	1	M23	MC6X12	.318	5	.040	0	y	5.494	21.6	27	15.606	1	.6	.85	H1-3
24	1	M24	MC6X12	.056	5	.006	0	y	5.494	21.6	27	15.606	1	.6	.85	H1-3
25	1	M25	MC6X12	.049	5	.006	0	y	5.494	21.6	27	15.606	1	.6	.85	H1-3
26	1	M26	MC6X12	.049	5	.006	0	y	5.494	21.6	27	15.606	1	.6	.85	H1-3
27	1	M27	MC6X12	.049	5	.006	0	y	5.494	21.6	27	15.606	1	.6	.85	H1-3
28	1	M28	MC6X12	.046	5	.006	0	y	5.494	21.6	27	15.606	1	.6	.85	H1-3
29	1	M29	MC6X12	.017	5	.002	10	y	5.494	21.6	27	15.606	1	.6	.85	H1-2
30	1	M30	MC6X12	.018	5	.002	10	y	5.494	21.6	27	15.606	1	.6	.85	H1-2
31	1	M31	MC6X12	.018	5	.002	10	y	5.494	21.6	27	15.606	1	.6	.85	H1-2
32	1	M32	MC6X12	.018	5	.002	10	y	5.494	21.6	27	15.606	1	.6	.85	H1-2
33	1	M33	MC6X12	.018	5	.002	10	y	5.494	21.6	27	15.606	1	.6	.85	H1-2
34	1	M34	MC6X12	.017	5	.002	10	y	5.494	21.6	27	15.606	1	.6	.85	H1-2

Company : JVA Consulting Engineers, Inc.
Designer : Kari Rogne
Job Number : Solar D. Garage shipping

Aug 5, 2007
6:43 PM
Checked By:_____

Member AISC ASD Steel Code Checks (Continued)

	LC	Member	Shape	UC Max	Loc[ft]	Shear UC	Loc[ft]	Dir	Fa[ksi]	Ft[ksi]	Fby[ksi]	Fbz[ksi]	Cb	Cmy	Cmz	Eqn
35	1	M35	MC6X12	.017	5	.002	10	y	5.494	21.6	27	15.606	1	.6	.85	H1-2
36	1	M36	MC6X12	.017	5	.002	0	y	5.494	21.6	27	15.606	1	.6	.85	H1-2
37	1	M37	MC6X12	.018	5	.002	0	y	5.494	21.6	27	15.606	1	.6	.85	H1-2
38	1	M38	MC6X12	.018	5	.002	0	y	5.494	21.6	27	15.606	1	.6	.85	H1-2
39	1	M39	MC6X12	.018	5	.002	0	y	5.494	21.6	27	15.606	1	.6	.85	H1-2
40	1	M40	MC6X12	.018	5	.002	0	y	5.494	21.6	27	15.606	1	.6	.85	H1-2
41	1	M41	MC6X12	.018	5	.002	0	y	5.494	21.6	27	15.606	1	.6	.85	H1-2
42	1	M42	MC6X12	.018	5	.002	0	y	5.494	21.6	27	15.606	1	.6	.85	H1-2
43	1	M43	MC6X12	.019	5	.002	0	y	5.494	21.6	27	15.606	1	.6	.85	H1-2
44	1	M44	MC6X12	.022	5	.002	0	y	5.494	21.6	27	15.606	1	.6	.85	H1-3
45	1	M45	MC6X12	.018	5	.002	10	y	5.494	21.6	27	15.606	1	.6	.85	H1-2
46	1	M46	MC6X12	.018	5	.002	0	y	5.494	21.6	27	15.606	1	.6	.85	H1-2
47	1	M47	MC6X12	.018	5	.002	10	y	5.494	21.6	27	15.606	1	.6	.85	H1-3
48	1	M48	MC6X12	.034	5	.004	10	y	5.494	21.6	27	15.606	1	.6	.85	H1-3
49	1	M49	MC6X12	.034	5	.004	10	y	5.494	21.6	27	15.606	1	.6	.85	H1-3
50	1	M50	MC6X12	.035	5	.004	10	y	5.494	21.6	27	15.606	1	.6	.85	H1-2
51	1	M51	HSS2X2X4	.230	0	.005	0	y	6.331	21.6	23.76	23.76	2.3	.31	.225	H1-2
52	1	M52	1x1/16	.179	0	.001	0	y	1.067	21.6	23.76	23.76	2.3	.307	.235	H2-1
53	1	M53	1x1/16	.362	0	.001	0	y	1.067	21.6	23.76	23.76	2.3	.306	.201	H2-1
54	1	M54	1x1/16	.266	9	.002	0	y	1.067	21.6	23.76	23.76	2.3	.307	.222	H2-1
55	1	M55	1x1/16	.283	0	.002	0	y	1.067	21.6	23.76	23.76	2.3	.322	.203	H1-1
56	1	M56	1x1/16	.248	0	.001	0	y	1.067	21.6	23.76	23.76	2.3	.384	.201	H1-2
57	1	M57	1x1/16	.218	0	.001	0	y	1.067	21.6	23.76	23.76	2.3	.385	.201	H1-2
58	1	M58	1x1/16	.179	0	.001	0	y	1.067	21.6	23.76	23.76	2.3	.384	.2	H1-2
59	1	M59	1x1/16	.100	0	.001	0	y	1.067	21.6	23.76	23.76	2.3	.325	.201	H1-2
60	1	M60	1x1/16	.087	0	.000	0	y	1.067	21.6	23.76	23.76	2.3	.312	.203	H1-1
61	1	M61	1x1/16	.078	0	.000	0	y	1.067	21.6	23.76	23.76	2.3	.311	.215	H1-1
62	1	M62	1x1/16	.081	0	.000	0	y	1.067	21.6	23.76	23.76	2.3	.311	.207	H1-1
63	1	M63	1x1/16	.093	0	.000	0	y	1.067	21.6	23.76	23.76	2.3	.311	.203	H1-1
64	1	M64	1x1/16	.137	0	.001	0	y	1.067	21.6	23.76	23.76	2.3	.311	.202	H1-1
65	1	M65	1x1/16	.097	0	.001	0	y	1.067	21.6	23.76	23.76	2.3	.309	.209	H1-2
66	1	M66	1x1/16	.144	9	.001	0	y	1.067	21.6	23.76	23.76	2.3	.294	.227	H2-1
67	1	M67	1x1/16	.144	9	.001	0	y	1.067	21.6	23.76	23.76	2.3	.294	.227	H2-1
68	1	M68	1x1/16	.097	0	.001	0	y	1.067	21.6	23.76	23.76	2.3	.309	.209	H1-2
69	1	M69	1x1/16	.137	0	.001	0	y	1.067	21.6	23.76	23.76	2.3	.311	.202	H1-1
70	1	M70	1x1/16	.093	0	.000	0	y	1.067	21.6	23.76	23.76	2.3	.311	.203	H1-1
71	1	M71	1x1/16	.081	0	.000	0	y	1.067	21.6	23.76	23.76	2.3	.311	.207	H1-1
72	1	M72	1x1/16	.078	0	.000	0	y	1.067	21.6	23.76	23.76	2.3	.311	.215	H1-1
73	1	M73	1x1/16	.087	0	.000	0	y	1.067	21.6	23.76	23.76	2.3	.312	.203	H1-1
74	1	M74	1x1/16	.100	0	.001	0	y	1.067	21.6	23.76	23.76	2.3	.325	.201	H1-2
75	1	M75	1x1/16	.179	0	.001	0	y	1.067	21.6	23.76	23.76	2.3	.384	.2	H1-2
76	1	M76	1x1/16	.218	0	.001	0	y	1.067	21.6	23.76	23.76	2.3	.385	.201	H1-2
77	1	M77	1x1/16	.248	0	.001	0	y	1.067	21.6	23.76	23.76	2.3	.384	.201	H1-2
78	1	M78	1x1/16	.283	0	.002	0	y	1.067	21.6	23.76	23.76	2.3	.322	.203	H1-1
79	1	M79	1x1/16	.266	9	.002	0	y	1.067	21.6	23.76	23.76	2.3	.307	.222	H2-1
80	1	M80	1x1/16	.362	0	.001	0	y	1.067	21.6	23.76	23.76	2.3	.306	.201	H2-1
81	1	M81	1x1/16	.179	0	.001	0	y	1.067	21.6	23.76	23.76	2.3	.307	.235	H2-1
82	1	M82	HSS2X2X4	.230	0	.005	0	y	6.331	21.6	23.76	23.76	2.3	.31	.225	H1-2
83	1	M83	1x1/16	.064	9	.000	0	z	1.067	21.6	23.76	23.76	2.3	.226	.367	H2-1
84	1	M84	1x1/16	.048	9	.000	0	z	1.067	21.6	23.76	23.76	2.3	.206	.362	H1-1
85	1	M85	1x1/16	.045	9	.000	0	z	1.067	21.6	23.76	23.76	2.3	.201	.355	H1-1
86	1	M86	1x1/16	.032	9	.000	0	z	1.067	21.6	23.76	23.76	2.3	.2	.345	H1-1
87	1	M87	1x1/16	.029	9	.000	0	y	1.067	21.6	23.76	23.76	2.3	.6	.34	H1-1
88	1	M88	1x1/16	.032	9	.000	0	z	1.067	21.6	23.76	23.76	2.3	.2	.345	H1-1
89	1	M89	1x1/16	.045	9	.000	0	z	1.067	21.6	23.76	23.76	2.3	.201	.355	H1-1
90	1	M90	1x1/16	.048	9	.000	0	z	1.067	21.6	23.76	23.76	2.3	.206	.362	H1-1
91	1	M91	1x1/16	.064	9	.000	0	z	1.067	21.6	23.76	23.76	2.3	.226	.367	H2-1

CONSULTING ENGINEERS

☐ JVA, Incorporated
1319 Spruce Street
Boulder, CO 80302
Ph: 303.444.1951
Fax: 303.444.1957

☐ JVA, Incorporated
25 Old Town Square
Suite 200
Fort Collins, CO 80524
Ph: 970.225.9099
Fax: 970.225.6923

☐ JVA, Incorporated
P.O. Box 1860
79050 US Hwy 40
Winter Park, CO 80482
Ph: 970.722.7677
Fax: 970.722.7679

Ceiling / Unistrut calcs

8' Span 4' spacing

Load
Plumbing 8 - 1" copper pipes 1.2 lbs/ft w/water = 38.4 lbs/4'f

Electrical 5 lbs / 4'f

Light fixtures 8 lbs / 4' f

Ducting 1 lb / 4' f

52.4 lbs / 4'f

Ceiling weight 1 lb/sq ft → 4 lbs / 1f

4 lbs + 52.4/8 = 10.55 lbs × 8 = 84.4 lbs uniform load

85 lbs × 8' = 720 lbs

Welds
1/8" = .464 k/in

2 in total weld = .928 k

Use P3000
@ 33" Okay
1/8" fillet weld ea side of ea end of unistrut.

CONSULTING STRUCTURAL ENGINEERS

Project: 2007 Solar Decathlon | Date: 07/26/07 | Job No.: 12741

Client: U of C | By: KCR | Sheet of

ASCE 7-02 Wind Calculation Sheet

Type of Structure	Building				
Enclosure Classification	Enclosed				
ASCE Structure Category	II - Typical Occupancy				
	Normal to Ridge	Parallel to Ridge			
Building Dimensions	30.7 ft	x	40 ft		
Mean Roof Elevation	14 ft	Eave Elevation	10 ft	Parapet Elevation	ft
Exposure Category	C				
Basic Wind Speed	110 mph	3 second gust		Type of Hill	No hill
Hurricane Prone Region?	No			H 1 ft	L_h 1 ft
Site Elevation	5,280 ft	Altitude Adjustment	0.86	x 1 ft	L_b no input
Roof Slope	5 :12	θ = 22.6 °			
Diaphragm continuous?	Yes			Internal Pressure Coefficient	GC_{pi} = ± 0.18
ASCE Importance Factor	I_w= 1.00				

Main Wind Resistance Wind Pressures (psf)

Note: Min. Proj. Area Design Pressure (Windward + Leeward) allowed by code = 10psf

Height (ft)	0-15	15-20	20-25	25-30	30-40	40-50	50-60	60-70	70-80	80-90	90-100
Windward Wall	**13.1**	**13.9**	**14.6**	**15.1**	**16.1**	**16.8**	**17.5**	**18.1**	**18.6**	**19.1**	**19.5**
Leeward Wall	**-8.2** wind normal to ridge				**-7.2** wind parallel to ridge						
Side Wall	**-11.4**										
Leeward Roof	**-9.8** wind normal to ridge										
Parapet	**34.6** Windward				**-21.2** Leeward						

Distance from Windward Edge (ft)		0 to 7	7 to 14	14 to 28	28 +
Windward Roof (for all h)	Normal to Ridge	**-5.4 +2.1**	**-5.4 +2.1**	**-5.4 +2.1**	**-5.4 +2.1**
	Parallel to Ridge	**-14.7**	**-14.7**	**-8.2**	**-4.9**

Components & Cladding

Type of Roof	Hip Roof? No		
Gable, Hip or Flat (¼:12)	**Roof**	**Wall**	**Parapet**
Component	"Typical Truss"	"Typical Stud"	
Effective Wind Area (ft^2)	24 x 8.00	10 x 3.33	0 x 0.00
Roof Overhang Dimensions	2 ft	Rafter Spacing 2 ft	Elev. 0 ft

Components & Cladding Wind Pressures (psf) Note: Minimum Design Pressure allowed by code = 10psf

		Walls										
Height (ft)	**Zone**	0-15	15-20	20-25	25-30	30-40	40-50	50-60	60-70	70-80	80-90	90-100
Windward	**4& 5**	**20.9**	**22.2**	**23.3**	**24.2**	**25.7**	**26.9**	**28.0**	**28.9**	**29.8**	**30.5**	**31.2**
Parapet	**2**	**51.9**										
	3	**69.2**										
Leeward/Side	**4**	**-23.1** internally										
	5	**-26.8** within 3.1 ft of corner										

Roof Zone on Sketches						
	Roof					
	3	**9.2**	within	3.1	x	3.1 sq ft of corner
	3	**-41.9**	within	3.1	x	3.1 sq ft of corner
	2	**9.2**	within	3.1	ft edges & ridge lines	
	2	**-26.5**	within	3.1	ft edges & ridge lines	
	1	**9.2**	internally			
	1	**-18.8**	internally			
	Overhang	**-74.6**	within	2.0	x	2.0 sq ft of corner
	Overhang	**-45.8**	internally			

For hip roofs, Zone 3 shall be treated as Zone 2.

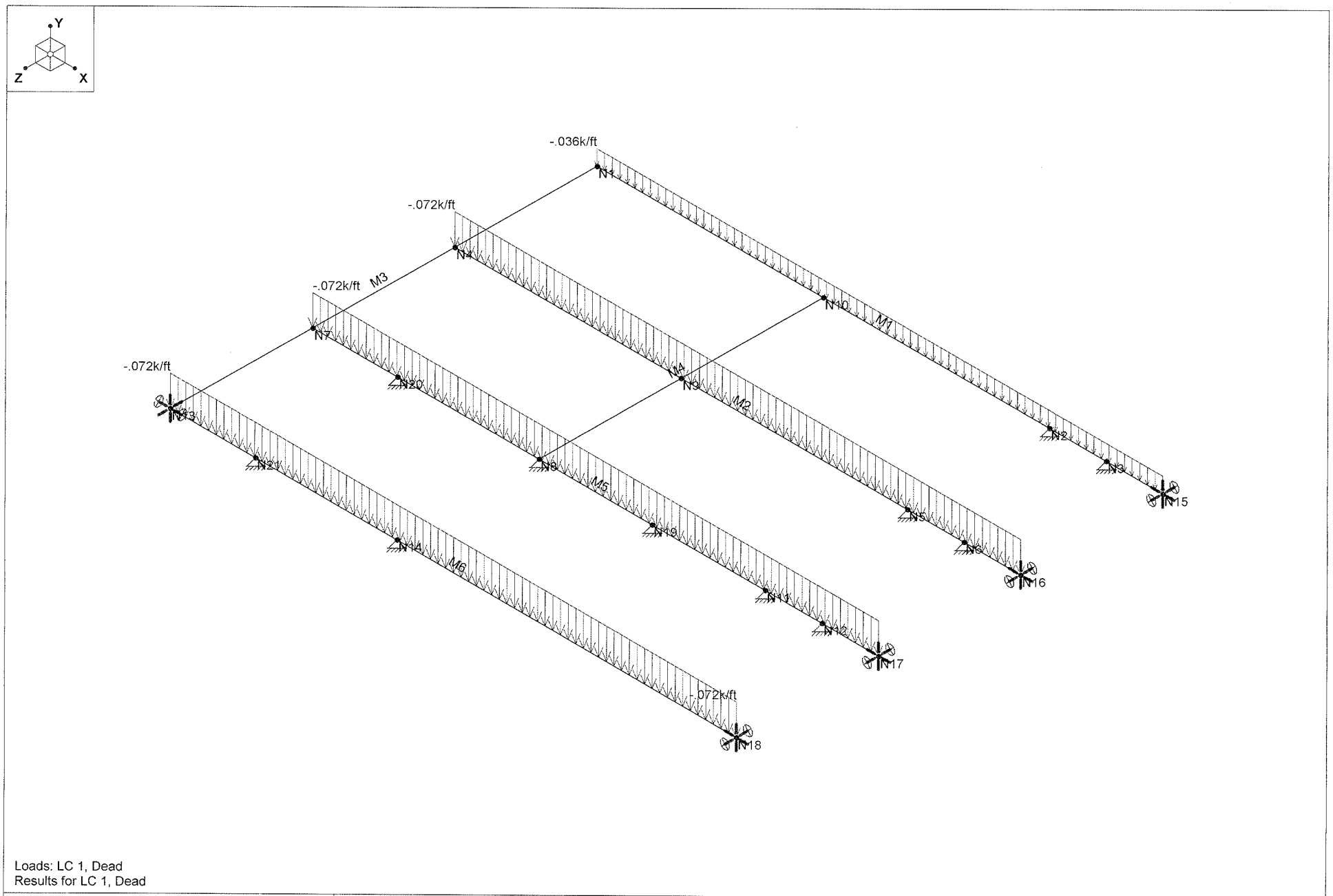

Loads: LC 1, Dead
Results for LC 1, Dead

JVA Consulting Engineers, Inc.	Solar D. Roof Cantilever	
Kari Rogne		Aug 5, 2007 at 4:58 PM
		Roof Overhang.r3d

CU 358

CU 358

Company : JVA Consulting Engineers, Inc.
Designer : Kari Rogne
Job Number :
Solar D. Roof Cantilever

Aug 5, 2007
5:00 PM
Checked By:_____

Joint Coordinates and Temperatures

	Label	X [ft]	Y [ft]	Z [ft]	Temp [F]	Detach From Di...
1	N1	0	0	0	0	
2	N2	8	0	0	0	
3	N3	9	0	0	0	
4	N4	0	0	2.5	0	
5	N5	8	0	2.5	0	
6	N6	9	0	2.5	0	
7	N7	0	0	5	0	
8	N8	4	0	5	0	
9	N9	4	0	2.5	0	
10	N10	4	0	0	0	
11	N11	8	0	5	0	
12	N12	9	0	5	0	
13	N13	0	0	7.5	0	
14	N14	4	0	7.5	0	
15	N15	10	0	0	0	
16	N16	10	0	2.5	0	Yes
17	N17	10	0	5	0	
18	N18	10	0	7.5	0	
19	N19	6	0	5	0	
20	N20	1.5	0	5	0	
21	N21	1.5	0	7.5	0	

Hot Rolled Steel Section Sets

	Label	Shape	Type	Design List	Material	Design Rules	A [in2]	Iyy [in4]	Izz [in4]	J [in4]
1	Tube	HSS3X1.5X2	Beam	Tube	A36	Typical	.957	.356	1.06	.887

Member Primary Data

	Label	I Joint	J Joint	K Joint	Rotate(deg)	Section/Shape	Type	Design List	Material	Design Rules
1	M1	N1	N15		90	Tube	Beam	Tube	A36	Typical
2	M2	N4	N16		90	Tube	Beam	Tube	A36	Typical
3	M3	N1	N13		90	Tube	Beam	Tube	A36	Typical
4	M4	N10	N8		90	Tube	Beam	Tube	A36	Typical
5	M5	N7	N17		90	Tube	Beam	Tube	A36	Typical
6	M6	N13	N18		90	Tube	Beam	Tube	A36	Typical

Joint Reactions (By Combination)

	LC	Joint Label	X [k]	Y [k]	Z [k]	MX [k-ft]	MY [k-ft]	MZ [k-ft]
1	1	N2	0	1.418	0	0	0	0
2	1	N13	0	.014	0	.117	0	0
3	1	N14	0	.393	0	0	0	0
4	1	N5	0	.932	0	0	0	0
5	1	N11	0	.125	0	0	0	0
6	1	N8	0	-.137	0	0	0	0
7	1	N3	0	-1.246	0	0	0	0
8	1	N6	0	-.674	0	0	0	0
9	1	N12	0	.057	0	0	0	0
10	1	N15	0	.272	0	0	0	-.075
11	1	N16	0	.185	0	0	0	-.048
12	1	N17	0	.042	0	0	0	-.007
13	1	N18	0	.24	0	0	0	-.253
14	1	N19	0	.156	0	0	0	0
15	1	N20	0	1.019	0	0	0	0

Joint Reactions (By Combination) (Continued)

	LC	Joint Label	X [k]	Y [k]	Z [k]	MX [k-ft]	MY [k-ft]	MZ [k-ft]
16	1	N21	0	-.091	0	0	0	0
17	1	Totals:	0	2.706	0			
18	1	COG (ft):	X: 4.95	Y: 0	Z: 4.241			

Member Section Deflections

	LC	Member Label	Sec	x [in]	y [in]	z [in]	x Rotate[rad]	(n) L/y Ratio	(n) L/z Ratio
1	1	M1	1	0	0	1.389	-2.06e-2	NC	86.419
2			2	0	0	1.039	-1.56e-2	NC	115.457
3			3	0	0	.537	-1.259e-2	NC	223.668
4			4	0	0	.041	-1.259e-2	NC	2945.137
5			5	0	0	0	-1.259e-2	NC	NC
6	1	M2	1	0	0	.732	-2.195e-2	NC	163.963
7			2	0	0	.548	-1.645e-2	NC	218.82
8			3	0	0	.286	-1.315e-2	NC	420.196
9			4	0	0	.024	-1.315e-2	NC	5100.584
10			5	0	0	0	-1.315e-2	NC	NC
11	1	M3	1	0	0	1.389	9.416e-3	NC	64.814
12			2	0	0	.898	7.119e-3	NC	100.2
13			3	0	0	.405	7.235e-3	NC	222.278
14			4	0	0	.069	6.365e-3	NC	1295.267
15			5	0	0	0	1.11e-3	NC	NC
16	1	M4	1	0	0	.757	1.679e-2	NC	NC
17			2	0	0	.58	1.29e-2	NC	4853.95
18			3	0	0	.399	9.015e-3	NC	2935.23
19			4	0	0	.2	4.514e-3	NC	5493.104
20			5	0	0	0	1.245e-5	NC	NC
21	1	M5	1	0	0	.146	-1.283e-2	NC	820.765
22			2	0	0	-.02	-1.313e-2	NC	6102.445
23			3	0	0	0	-1.332e-2	NC	NC
24			4	0	0	0	-1.332e-2	NC	NC
25			5	0	0	0	-1.332e-2	NC	NC
26	1	M6	1	0	0	0	0	NC	NC
27			2	0	0	-.001	0	NC	NC
28			3	0	0	.023	0	NC	5326.844
29			4	0	0	.049	0	NC	2468.215
30			5	0	0	0	0	NC	NC

Member Section Stresses

	LC	Member Label	Sec	Axial[ksi]	y Shear[ksi]	z Shear[ksi]	y top Bending[ksi]	y bot Bend..	z top Bend..	z bot Bend...
1	1	M1	1	0	0	-.22	0	0	-2.13	2.13
2			2	0	0	.063	0	0	-3.855	3.855
3			3	0	0	.707	0	0	-1.566	1.566
4			4	0	0	.99	0	0	17.149	-17.149
5			5	0	0	.781	0	0	1.886	-1.886
6	1	M2	1	0	0	-.548	0	0	3.356	-3.356
7			2	0	0	-.005	0	0	-2.746	2.746
8			3	0	0	.186	0	0	-.826	.826
9			4	0	0	.729	0	0	9.267	-9.267
10			5	0	0	.531	0	0	1.21	-1.21
11	1	M3	1	0	0	.22	0	0	-3.483	3.483
12			2	0	0	.237	0	0	.298	-.298
13			3	0	0	.803	0	0	6.59	-6.59
14			4	0	0	-.585	0	0	12.485	-12.485
15			5	0	0	-.567	0	0	2.959	-2.959
16	1	M4	1	0	0	-.36	0	0	3.483	-3.483

Company : JVA Consulting Engineers, Inc.
Designer : Kari Rogne
Job Number :
Solar D. Roof Cantilever

Aug 5, 2007
5:00 PM
Checked By:_____

Member Section Stresses (Continued)

	LC	Member Label	Sec	Axial[ksi]	y Shear[ksi]	z Shear[ksi]	y top Bending[ksi]	y bot Bend..	z top Bend..	z bot Bend...
17			2	0	0	-.348	0	0	-.425	.425
18			3	0	0	-.337	0	0	-4.204	4.204
19			4	0	0	.027	0	0	-.146	.146
20			5	0	0	.039	0	0	.214	-.214
21	1	M5	1	0	0	1.405	0	0	-6.1	6.1
22			2	0	0	-.973	0	0	5.112	-5.112
23			3	0	0	.001	0	0	-.293	.293
24			4	0	0	.097	0	0	-.197	.197
25			5	0	0	.119	0	0	.186	-.186
26	1	M6	1	0	0	-.608	0	0	4.874	-4.874
27			2	0	0	.192	0	0	-.297	.297
28			3	0	0	-.395	0	0	-.056	.056
29			4	0	0	.146	0	0	-2.802	2.802
30			5	0	0	.689	0	0	6.412	-6.412

Member AISC ASD Steel Code Checks (By Combination)

	LC	Member	Shape	UC Max	Loc[ft]	Shear UC	Loc[ft]	Dir	Fa[ksi]	Ft[ksi]	Fby[ksi]	Fbz[ksi]	Cb	Cmy	Cmz	Eqn
1	1	M1	HSS3X1.5...	.976	8.021	.210	8.021	z	3.853	21.6	21.6	21.6	1.75	.85	.6	H1-2
2	1	M2	HSS3X1.5...	.573	8.021	.174	0	z	3.853	21.6	21.6	21.6	1.75	.85	.6	H1-2
3	1	M3	HSS3X1.5...	.728	5	.230	5	z	6.85	21.6	21.6	21.6	1.75	.85	.6	H1-2
4	1	M4	HSS3X1.5...	.177	2.5	.246	2.5	z	13.175	21.6	23.76	23.76	1.75	.85	.6	H2-1
5	1	M5	HSS3X1.5...	.649	1.458	.127	1.458	z	3.853	21.6	21.6	21.6	1.75	.85	.6	H1-2
6	1	M6	HSS3X1.5...	.297	10	.048	10	z	3.853	21.6	21.6	21.6	1.75	.85	.6	H1-2

JVA, Incorporated
1319 Spruce Street
Boulder, CO 80302
Ph: 303.444.1951
Fax: 303.444.1957

JVA, Incorporated
25 Old Town Square
Suite 200
Fort Collins, CO 80524
Ph: 970.225.9099
Fax: 970.225.6923

JVA, Incorporated
P.O. Box 1860
79050 US Hwy 40
Winter Park, CO 80482
Ph: 970.722.7677
Fax: 970.722.7679

Up lift of Solar Panel
Rack from Roof

Zone 3 Uplift pressure = 41.9 psf

Beams @ 3'-0

G = 0.5 Lag Screw Reference Withdrawl
Design Values Table 11.2A
2005 NDS

D(lag) = 1/4" ⇒ 225 lbs/in

2x6 nominal → 1 1/2 x 5 1/2 actual
assume 1" thread penetration

255 lbs / 41.9 psf = 6.08 sf / 3 sf trib = 2.0 ft

Use 1/4" lag @ 16" on edges

Zone 2 Uplift pressure = 26.5 psf

255 lbs / 26.5 psf = 9.6 sf / 3 ft trib = 3.2 ft

Use 1/4" lag @ 32" in field

At overhang - North West corner
4 - 1/4" lag @ 6" each beam staggered
Table 11.2b

#8 or larger Wood Screw 117 lbs/in

117 lbs/in / 41.9 psf = 2.79 sf / 3 ft = .93 ft = 10 in edges

117 lbs/in / 26.5 psf = 4.4 sf / 3 ft = 1.47 ft = 16 in field

At overhang - North West corner use 8 - #8 @ 3" each beam
stagger

Battery Rack
by SIW
5/29/07
pg 1 of 3

battery

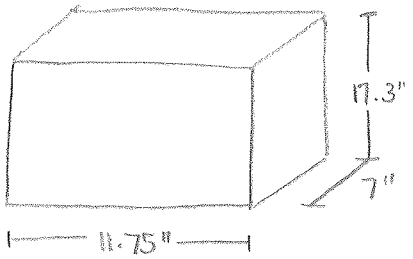

W = 113 lb

requirements
- 2 shelves
- 48 total batteries - each shelf 2 rows of 12
- 6" clearance above ground
- 18" clearance above batteries
- less than 7'11" tall × 7'6" long
- 2nd shelf about waist height (~3')
- shelf on top for external storage
- 1½" clearance around each battery

assume battery size 12.5" × 7.75"
min shelf size 7.75(12) × 12.5(2) = 93" × 25"
93" > 7'6" (90") ⇒ use 7'6" length ⇒ cannot have 1½" clearance around each battery
↳ 7' for 3" clearance each side

loads
W = 113 lb (11.75)(7) = 1.37 psi
1.37 psi (12.5) = 17.125 lb/in

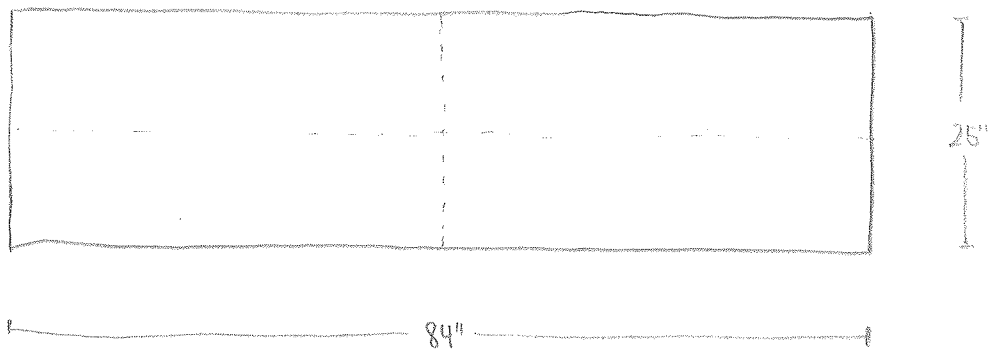

Battery Rack
by SHW
5/29/07
pg 2 of 3
horiz. members

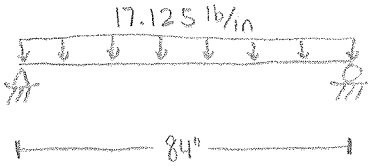

use HSS ASTM A500 grade B
$F_y = 46\,ksi$
$F_u = 58\,ksi$

$$M_u = \frac{P\ell^2}{8} = \frac{17.125\,lb/in\,(84\,in)^2}{8} = 15{,}200\,in\text{-}lb$$

$$\phi M_N = \phi F_y S_x$$
$$M_u \le \phi M_N$$
$$M_u \le \phi F_y S_x$$
$$S_x \ge \frac{M_u}{\phi F_y} = \frac{15{,}200\,in\text{-}lb}{0.9\,(46{,}000\,lb/in^2)} = 0.367\,in^3$$

try HSS 2×2×¼ $S = 0.747\,in^3$ $A = 1.51\,in^2$

$$M_u = 15{,}200\,in\text{-}lb + 1.2\,\frac{w_D \ell^2}{8} = 15{,}200\,in\text{-}lb + 1.2\,(5.38\,lb/ft)\left(\frac{1ft}{12in}\right)\frac{(84\,in)^2}{8} = 15{,}700\,in\text{-}lb$$
$$\phi M_p = 0.9\,(46{,}000\,lb/in^2)(0.747\,in^3) = 31{,}000\,in\text{-}lb$$

$$M_u = 15{,}700\,in\text{-}lb \le 31{,}000\,in\text{-}lb = \phi M_p \quad \checkmark OK$$

$$V_u = \frac{P\ell}{2} + 1.2\,\frac{w_D \ell}{2} = \frac{17.125\,lb/in\,(84\,in)}{2} + 1.2\,\frac{(5.38\,lb/ft)\left(\frac{1ft}{12in}\right)(84\,in)}{2} = 742\,lb$$

$$\phi V_N = \phi\,0.6\,F_y A = 0.9\,(0.6)(46{,}000\,lb/in^2)(1.51\,in^2) = 37{,}500\,lb$$

$$V_u = 742\,lb \le 37{,}500\,lb = \phi V_N \quad \checkmark OK$$

Battery Rack
by SIW
5/29/07
pg. 3 of 3

vertical members

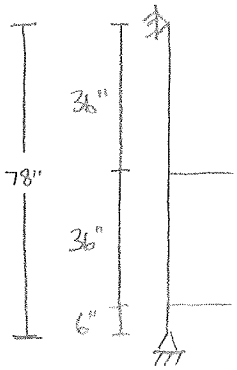

LRFD 3rd Ed. Table C-C2.1 K=1.0
KL = 78 in

LRFD 3rd Ed. Table 4-6
HSS 2½ x 2½ x ¼ $\phi_c P_n$ = 50.5 kips

1.37psi (12.5 in)(42 in) = 720 lb x 2 = 1440 lb < 50,500 lb

slenderness OK

TJ-Beam® 6.25 Serial Number: 7005130721
User: 2 8/7/2007 11:07:38 AM
Page 1 Engine Version: 6.25.71

Deck Beam South/West

3 Pcs of 1 1/2" x 5 1/2" 1.3E Solid Sawn Hem-Fir #2

THIS PRODUCT MEETS OR EXCEEDS THE SET DESIGN CONTROLS FOR THE APPLICATION AND LOADS LISTED

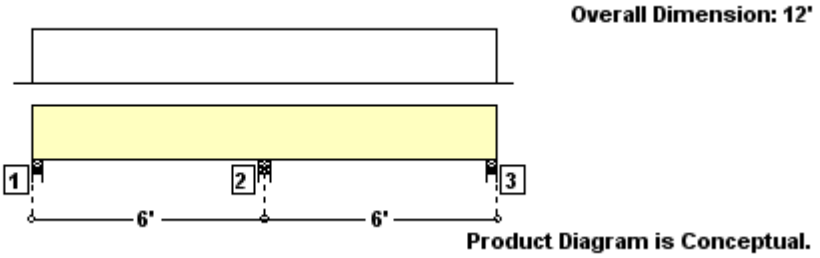

LOADS:

Analysis is for a Drop Beam Member. Tributary Load Width: 6'
Primary Load Group - Residential - Living Areas (psf): 50.0 Live at 100 % duration, 12.0 Dead

SUPPORTS:

		Input Width	Bearing Length	Vertical Reactions (lbs) Live/Dead/Uplift/Total	Detail	Other
1	Stud wall	3.50"	1.50"	816 / 182 / 0 / 997	By Others	None
2	Stud wall	3.50"	1.51"	2188 / 562 / 0 / 2750	By Others	None
3	Stud wall	3.50"	1.50"	816 / 182 / 0 / 997	By Others	None

DESIGN CONTROLS:

	Maximum	Design	Control	Control	Location
Shear (lbs)	1375	1147	2475	Passed (46%)	Lt. end Span 2 under Floor loading
Moment (Ft-Lbs)	-1604	-1604	2403	Passed (67%)	Bearing 2 under Floor loading
Live Load Defl (in)		0.068	0.194	Passed (L/999+)	MID Span 1 under Floor ALTERNATE span loading
Total Load Defl (in)		0.078	0.292	Passed (L/899)	MID Span 1 under Floor ALTERNATE span loading

-Deflection Criteria: STANDARD(LL:L/360,TL:L/240).
-Allowable moment was increased for repetitive member usage.
-Bracing(Lu): All compression edges (top and bottom) must be braced at 12' o/c unless detailed otherwise. Proper attachment and positioning of lateral bracing is required to achieve member stability.
-The allowable shear stress (Fv) has not been increased due to the potential of splits, checks and shakes. See NDS for applicability of increase.
-Analysis assumes continuous member. Lap joints, splices and finger joints significantly reduce member performance and have not been considered.
-The load conditions considered in this design analysis include alternate member pattern loading.

ADDITIONAL NOTES:

-IMPORTANT! The analysis presented is output from software developed by Trus Joist (TJ). TJ warrants the sizing of its products by this software will be accomplished in accordance with TJ product design criteria and code accepted design values. The specific product application, input design loads, and stated dimensions have been provided by the software user. This output has not been reviewed by a TJ Associate.
-Not all products are readily available. Check with your supplier or TJ technical representative for product availability.
-THIS ANALYSIS FOR iLevel PRODUCTS ONLY! PRODUCT SUBSTITUTION VOIDS THIS ANALYSIS. Solid sawn lumber analysis is in accordance with 2001 NDS methodology.
-Allowable Stress Design methodology was used for Building Code IBC analyzing the solid sawn lumber material listed above.
-Note: See TJ SPECIFIER'S / BUILDER'S GUIDES for multiple ply connection.

PROJECT INFORMATION:

Solar Decathlon 2007
University of Colorado at Boulder

OPERATOR INFORMATION:

Kari Rogne
JVA
1319 Spruce Street
Boulder, CO 80305
Phone : (303)444-1951
KRogne@jvajva.com

Z:\12741 Solar Decathlon\CALCULATIONS\TJ beam Calcs\Deck Beam.sms

TJ-Beam® 6.25 Serial Number: 7005130721
User: 2 8/7/2007 11:07:38 AM
Page 2 Engine Version: 6.25.71

Deck Beam South/West

3 Pcs of 1 1/2" x 5 1/2" 1.3E Solid Sawn Hem-Fir #2

THIS PRODUCT MEETS OR EXCEEDS THE SET DESIGN CONTROLS FOR THE APPLICATION AND LOADS LISTED

Load Group: Primary Load Group

	^ 5' 10.00"	^ 5' 10.00" ^	
Max. Vertical Reaction Total (lbs)	997	2750	997
Max. Vertical Reaction Live (lbs)	816	2188	816
Required Bearing Length in	1.50(W)	1.51(W)	1.50(W)
Max. Unbraced Length (in)	144	144 144	

Loading on all spans, LDF = 0.90 , 1.0 Dead

Shear at Support (lbs)	124	-235	235	-124
Max Shear at Support (lbs)	169	-281	281	-169
Member Reaction (lbs)	169	562		169
Support Reaction (lbs)	182	562		182
Moment (Ft-Lbs)	185	-328	185	

Loading on all spans, LDF = 1.00 , 1.0 Dead + 1.0 Floor

Shear at Support (lbs)	605	-1147	1147	-605
Max Shear at Support (lbs)	825	-1375	1375	-825
Member Reaction (lbs)	825	2750		825
Support Reaction (lbs)	888	2750		888
Moment (Ft-Lbs)	902	-1604	902	
Live Deflection (in)	0.040	0.040		
Total Deflection (in)	0.050	0.050		

ALTERNATE span loading on odd # spans, LDF = 1.00 , 1.0 Dead + 1.0 Floor

Shear at Support (lbs)	714	-1038	344	-14
Max Shear at Support (lbs)	934	-1266	391	-59
Member Reaction (lbs)	934	1656		59
Support Reaction (lbs)	997	1656		71
Moment (Ft-Lbs)	1157	-966	23	
Live Deflection (in)	0.068	-0.030		
Total Deflection (in)	0.078	-0.022		

ALTERNATE span loading on even # spans, LDF = 1.00 , 1.0 Dead + 1.0 Floor

Shear at Support (lbs)	14	-344	1038	-714
Max Shear at Support (lbs)	59	-391	1266	-934
Member Reaction (lbs)	59	1656		934
Support Reaction (lbs)	71	1656		997
Moment (Ft-Lbs)	23	-966	1157	
Live Deflection (in)	-0.030	0.068		
Total Deflection (in)	-0.022	0.078		

PROJECT INFORMATION:

Solar Decathlon 2007
University of Colorado at Boulder

OPERATOR INFORMATION:

Kari Rogne
JVA
1319 Spruce Street
Boulder, CO 80305
Phone : (303)444-1951
KRogne@jvajva.com

Z:\12741 Solar Decathlon\CALCULATIONS\TJ beam Calcs\Deck Beam.sms

CUSD2007

site operations

MATERIAL SAFETY DATA SHEETS

MSDS INTERIOR MATERIALS +
CLEANING PRODUCTS

MSDS ELECTRICAL, MECHANICAL
+ PLUMBING SYSTEMS

MSDS FIRE SAFETY PRODUCTS

MSDS EXTERIOR + STRUCTURE

MATERIAL SAFETY DATA SHEET

Paper Faced Gypsum Boards

ID: GP-71A

Section 1: PRODUCT AND COMPANY IDENTIFICATION

Product Name:	Paper Faced Gypsum Boards
Product Number:	(See product list found in section 16)
Product Use:	Products accommodate wide range of wall, floor and ceiling applications and soffit treatments; vary in level of sound, water and fire resistance.
Manufacturer/Supplier:	Georgia-Pacific Gypsum LLC 133 Peachtree Street, N.E., Atlanta, GA 30303
Phone Number:	(800) 225-6119 (Technical Information) (404) 652-5119 (MSDS Request)
Emergency Phone:	CHEMTREC (800) 424-9300
Date of Preparation:	June 8, 2007

Section 2: HAZARDS IDENTIFICATION

EMERGENCY OVERVIEW

CAUTION

Cutting, sanding, or otherwise working with this product may generate large amounts of dust. Dust can be irritating to the eyes, skin, and respiratory system.

Likely Routes of Exposure: Skin contact, eye contact, and inhalation.

Potential Health Effects:

Eye:	Dust may cause eye irritation. Symptoms may include discomfort or pain, excess blinking and tear production, with possible redness and swelling.
Skin:	Dust may produce itching, rash, and redness. Handling can cause dry skin.
Ingestion:	Not applicable under normal conditions of use. May result in obstruction and temporary irritation of the digestive tract.
Inhalation:	May cause respiratory tract irritation.

Medical Conditions Aggravated By Exposure: Because of its irritating properties, dust may aggravate preexisting skin, eye, and respiratory conditions.

Target Organs: Skin, eyes and respiratory system.

Section 3: COMPOSITION / INFORMATION ON INGREDIENTS

Ingredient	CAS #	Wt. %
Gypsum (calcium sulfate)	7778-18-9	60 - 100
Silica, crystalline, quartz	14808-60-7	0.1 - 1

This product is a hazardous chemical as defined by the OSHA Hazard Communication Standard, 29 CFR 1910.1200.

Gypsum (calcium sulfate) contains naturally occurring silica crystalline (quartz), which is listed as a lung carcinogen. See section 8 for exposure information.

Section 4: FIRST AID MEASURES

Eye Contact:	In case of contact, immediately flush eyes with plenty of water. Remove contact lenses, if worn. If irritation persists, get medical attention.
Skin Contact:	In case of contact, immediately flush skin with plenty of water. Call a physician if irritation develops and persists.

Inhalation: Remove to fresh air. If symptoms persist, obtain medical attention.

Ingestion: May result in obstruction and irritation if ingested. Get medical attention.

Section 5: FIRE FIGHTING MEASURES

Flammability: Not flammable by OSHA/WHMIS criteria.

Flammable Limits: This product is fire resistant and has the following surface burning characteristics reported by nationally recognized laboratories. Flame Spread, 0 - 25, and Smoke Development, 0.

Means of Extinction:

Suitable Extinguishing Media: Treat for surrounding material.

Unsuitable Extinguishing Media: Not applicable.

Products of Combustion: May include, and are not limited to: calcium oxide and sulfur dioxide.

Explosion Data:

Sensitivity to Mechanical Impact: Not applicable.

Sensitivity to Static Discharge: Not applicable.

Protection of Firefighters: Firefighters should wear full protective clothing including self contained breathing apparatus.

Section 6: ACCIDENTAL RELEASE MEASURES

Personal Precautions: Use personal protection recommended in Section 8 and handling recommendation in Section 7. Deny entry to unnecessary personnel.

Environmental Precautions: Keep out of drains, sewers, ditches, and waterways.

Methods for Containment: Pick up large pieces, then place in a suitable container. Do not flush to sewer or allow to enter waterways. Use appropriate Personal Protective Equipment (PPE).

Methods for Clean-Up: Scoop up material and place in a disposal container. Utilize wet methods, if appropriate, to minimize dust.

Section 7: HANDLING AND STORAGE

Handling:
Avoid contact with skin and eyes. Do not breathe dust. Use only in well-ventilated areas. Do not use a power saw. Wear appropriate NIOSH approved dust mask or filtering facepiece when permissible exposure limits may be exceeded. When using do not eat or drink. Launder contaminated clothing before reuse.

Storage:
Keep out of the reach of children. Store level and keep dry. Dewpoint or other conditions causing the presence of moisture can damage the product during storage.

Section 8: EXPOSURE CONTROLS / PERSONAL PROTECTION

Exposure Guidelines

		Exposure Limits	
Ingredient	**CAS #**	**OSHA-PEL**	**ACGIH-TLV**
Gypsum ($CaSO_4$)	7778-18-9	15 mg/m³ (total); 5 mg/m³ (resp)	10 mg/m³ (total)
Silica, crystalline, quartz	14808-60-7	((10 mg/m^3)/(%SiO_2+2) TWA (resp)); ((30 mg/m^3)/(%SiO_2+2) TWA (total)); ((250)/(%SiO_2+5) mppcf TWA (resp))	0.025 mg/m³

Engineering Controls: Store and snap method recommended. Do not use power saw. Provide local and general exhaust ventilation to keep airborne dust concentrations below exposure limits. Use wet methods, if appropriate, to reduce the generation of dust.

Personal Protective Equipment:

Eye/Face Protection: Safety glasses or goggles are recommended when working with the product. Ensure compliance with OSHA's PPE standards (29 CFR 1910.132 (general) and 133 (eye and face protection)). Safety shower/eye wash fountain must be readily available in the workplace area (29 CFR 1910.151(c)).

Skin Protection: Impervious protective clothing and gloves recommended to prevent drying or irritation of hands. Ensure compliance with OSHA's PPE standards (29 CFR 1910.132 (general) and 138 (hand protection)). Safety shower/eye wash fountain must be readily available in the workplace area (29 CFR 1910.151(c)).

Respiratory Protection: A NIOSH approved dust mask or filtering facepiece is recommended in poorly ventilated areas or when permissible exposure limits may be exceeded. Respirators should be selected by and used under the direction of a trained health and safety professional following requirements found in OSHA's respirator standard (29 CFR 1910.134) and ANSI's standard for respiratory protection (Z88.2).

Section 9: PHYSICAL AND CHEMICAL PROPERTIES

Appearance:	Paper faced gypsum boards.
Color:	Facing color varies.
Odor:	No odor.
Odor Threshold:	Not available.
Physical State:	Solid.
pH:	7
Viscosity:	Not applicable.
Freezing Point:	Not applicable.
Boiling Point:	Not applicable.
Flash Point:	Not applicable.
Evaporation Rate:	Not available.
Lower Flammability Limit:	Not applicable.
Upper Flammability Limit:	Not applicable.
Vapor Pressure:	Not applicable.
Vapor Density:	Not applicable.
Specific Gravity:	2.2 - 2.4
Solubility in Water:	0.2% @ 22°C
Coefficient of Water/Oil Distribution:	Not available.
Auto-ignition Temperature:	Not applicable.
Percent Volatile, wt. %:	Not available.
VOC content, wt. %:	Not available.

Section 10: STABILITY AND REACTIVITY

Stability: Stable under normal storage conditions.

Conditions of Reactivity: Contact with strong acids produces carbon dioxide.

Incompatible Materials: None known.

Hazardous Decomposition Products: May include, and are not limited to: calcium oxide and sulfur dioxide.

Possibility of Hazardous Reactions: No dangerous reaction known under conditions of normal use.

Section 11: TOXICOLOGY INFORMATION

EFFECTS OF ACUTE EXPOSURE

Component Anaylsis

Ingredient	LD_{50} (oral)	LC_{50}
Gypsum (calcium sulfate)	Not available.	Not available.
Silica, crystalline, quartz	Not available.	Not available.

EFFECTS OF CHRONIC EXPOSURE

Target Organs: Lungs.

Chronic Effects: Hazardous by OSHA/WHMIS criteria.
Respirable crystalline silica in the form of quartz or cristobalite from occupational sources is listed by the International Agency for Research on Cancer (IARC) and National Toxicology Program (NTP) as a lung carcinogen.

Prolonged exposure to respirable crystalline silica has been known to cause silicosis, a lung disease, which may be disabling. While there may be a factor of individual susceptibility to a given exposure to respirable silica dust, the risk of contracting silicosis and the severity of the disease is clearly related to the amount of dust exposure and the length of time (usually years) of exposure.

Carcinogenicity: Hazardous by OSHA/WHMIS criteria.

Ingredient	Chemical Listed as Carcinogen or Potential Carcinogen
Silica, crystalline, quartz	**ACGIH -** A2 - Suspected human carcinogen; **IARC -** 1 - The agent is carcinogenic to humans; **NTP -** 1 - Known to be carcinogens

Mutagenicity; Reproductive Effects; Teratogenicity; Embryotoxicity; Respiratory Sensitization; Skin Sensitization: Not hazardous by OSHA/WHMIS criteria.

Toxicologically Synergistic Materials: Not available.

Section 12: ECOLOGICAL INFORMATION

Ecotoxicity: Not considered to be harmful to aquatic life.

		LC/EC_{50}
Freshwater Fish Species Data:		
Gypsum (calcium sulfate)	7778-18-9	96 Hr LC50 Lepomis macrochirus: 2980 mg/L (static)
Water Flea Data:		
Gypsum (calcium sulfate)	7778-18-9	120 Hr EC50 Nitscheria linearis: 3200 mg/L

Georgia-Pacific

MATERIAL SAFETY DATA SHEET

Paper Faced Gypsum Boards

ID: GP-71A

Section 13: DISPOSAL CONSIDERATIONS

Disposal Instructions:
This product, if discarded as supplied, is not considered a hazardous waste under Federal Waste Regulations 40 CFR 261. If processing, use, or contamination alters the material, the waste must be tested using methods described in 40 CFR 261 to determine if it meets applicable definition of hazardous waste.

Section 14: TRANSPORTATION INFORMATION

DOT Classification
Not regulated

TDG Classification
Not regulated

Section 15: REGULATORY INFORMATION

Federal Regulations

Canadian: This product has been classified in accordance with the hazard criteria of the Controlled Products Regulations and the MSDS contains all the information required by the Controlled Products Regulations.

US: MSDS prepared pursuant to the Hazard Communication Standard (CFR29 1910.1200).

SARA Title III

Ingredient	Section 302 (EHS) TPQ (lbs.)	Section 304 EHS RQ (lbs.)	CERCLA RQ (lbs.)	Section 313
Gypsum (calcium sulfate)	Not listed.	Not listed.	Not listed.	Not listed.
Silica, crystalline, quartz	Not listed.	Not listed.	Not listed.	Not listed.

Global Inventories

Ingredient	Canada DSL/NDSL	USA TSCA
Gypsum (calcium sulfate)	DSL	Yes.
Silica, crystalline, quartz	DSL	Yes.

HMIS - Hazardous Materials Identification System

Health - 1* **Flammability -** 0 **Physical Hazard -** 0

NFPA - National Fire Protection Association:

Health - 1 **Fire -** 0 **Reactivity -** 0

Hazard Rating: 0 = minimal, 1 = slight, 2 = moderate, 3 = severe, 4 = extreme

WHMIS Classification(s):
Class D2A - Carcinogenicity
Class D2A - Chronic Toxic Effects

Georgia-Pacific

MATERIAL SAFETY DATA SHEET

Paper Faced Gypsum Boards

ID: GP-71A

WHMIS Hazard Symbols:

Section 16: OTHER INFORMATION

Other Information:

Products on this MSDS do not contain asbestos.

Product List:

TOUGHROCK® Gypsum Board
TOUGHROCK® Cameo® Veneer Plaster Base (Blueboard)
TOUGHROCK® MOISTURE-GUARD® (Greenboard)
TOUGHROCK® Gypsum Sheathing (Treated Core)
TOUGHROCK® Gypsum Sheathing (Non-Treated Core)

Disclaimer:
IMPORTANT: The information and data herein are believed to be accurate and have been compiled from sources believed to be reliable. It is offered for you consideration, investigation and verification. Buyer assumes all risk of use, storage and handling of the product in compliance with applicable federal, state and local laws and regulations. Georgia-Pacific and its subsidiaries make no warranty of any kind, expressed or implied, concerning the accuracy or completeness of the information and data herein. The implied warranties of merchantability and fitness for a particular purpose are specifically excluded. Georgia-Pacific and its subsidiaries will not be liable for claims that the information and data are inaccurate, incomplete or otherwise misleading.

Supercedes: 01/01/04

Prepared by: Georgia-Pacific LLC
(404) 652-5119 (MSDS Request)

MATERIAL SAFETY DATA SHEET

Glass Mat Faced Gypsum Panels

ID: GP-072

Section 1: PRODUCT AND COMPANY IDENTIFICATION

Product Name:	Glass Mat Faced Gypsum Panels
Product Number:	(See product list found in section 16)
Product Use:	Patented water and mold resistant boards for exterior and interior walls and ceilings, interior floors, countertops, roof decks, elevator shafts and stairwells. FIREGUARD® panels can be used in fire-rated assemblies and area separation walls.
Manufacturer/Supplier:	Georgia-Pacific Gypsum LLC 133 Peachtree Street, N.E., Atlanta, GA 30303
Phone Number:	(800) 225-6119 (Technical Information) (404) 652-5119 (MSDS Request)
Emergency Phone:	CHEMTREC (800) 424-9300
Date of Preparation:	June 8, 2007

Section 2: HAZARDS IDENTIFICATION

EMERGENCY OVERVIEW

CAUTION

Cutting, sanding, or otherwise working with this product may generate large amounts of dust. Dust can be irritating to the eyes, skin, and respiratory system.

Likely Routes of Exposure: Skin contact, eye contact, and inhalation.

Potential Health Effects:

Eye: Dust may cause eye irritation. Symptoms may include discomfort or pain, excess blinking and tear production, with possible redness and swelling.

Skin: Dust and glass fibers may produce itching, rash, and redness. Handling can cause dry skin.

Ingestion: Not applicable under normal conditions of use. May result in obstruction and temporary irritation of the digestive tract.

Inhalation: May cause respiratory tract irritation.

Medical Conditions Aggravated By Exposure: Because of irritating properties, dust and glass fibers may aggrevate preexisting skin, eye, and respiratory conditions.

Target Organs: Skin, eyes and respiratory system.

Section 3: COMPOSITION / INFORMATION ON INGREDIENTS

Ingredient	CAS #	Wt. %
Gypsum (calcium sulfate)	7778-18-9	60 - 100
Continuous filament glass fibers	65997-17-3	1 - 5
Silica, crystalline, quartz	14808-60-7	0.1 - 1

Gypsum (calcium sulfate) contains naturally occurring silica crystalline (quartz), which is listed as a lung carcinogen. See section 8 for exposure information.

Georgia-Pacific

MATERIAL SAFETY DATA SHEET

Glass Mat Faced Gypsum Panels

ID: GP-072

Section 4: FIRST AID MEASURES

Eye Contact: In case of contact, immediately flush eyes with plenty of water. Remove contact lenses, if worn. If irritation persists, get medical attention.

Skin Contact: In case of contact, immediately flush skin with plenty of water. Call a physician if irritation develops and persists.

Inhalation: Remove to fresh air. If symptoms persist, obtain medical attention.

Ingestion: May result in obstruction and irritation if ingested. Get medical attention.

Section 5: FIRE FIGHTING MEASURES

Flammability: Not flammable by OSHA/WHMIS criteria.

Flammable Limits: This product is fire resistant and has the following surface burning characteristics reported by nationally recognized laboratories. Flame Spread, 0 - 25, and Smoke Development, 0 - 20 (ASTH EB4).

Means of Extinction:

Suitable Extinguishing Media: Treat for surrounding material.

Unsuitable Extinguishing Media: Not applicable.

Products of Combustion: May include, and are not limited to: calcium oxide and sulfur dioxide.

Explosion Data:

Sensitivity to Mechanical Impact: Not applicable.

Sensitivity to Static Discharge: Not applicable.

Protection of Firefighters: Firefighters should wear full protective clothing including self contained breathing apparatus.

Section 6: ACCIDENTAL RELEASE MEASURES

Personal Precautions: Use personal protection recommended in Section 8 and handling recommendation in Section 7. Maintain appropriate ventilation.

Environmental Precautions: Keep out of drains, sewers, ditches, and waterways.

Methods for Containment: Pick up large pieces, then place in a suitable container. Do not flush to sewer or allow to enter waterways. Use appropriate Personal Protective Equipment (PPE).

Methods for Clean-Up: Scoop up material and place in a disposal container. Use wet methods, if appropriate, to minimize dust.

Section 7: HANDLING AND STORAGE

Handling:
Avoid contact with skin and eyes. Do not breathe dust. Use only in well-ventilated areas. Do not use a power saw. Wear appropriate NIOSH approved dust mask or filtering facepiece when permissible exposure limits may be exceeded. When using do not eat or drink. Launder contaminated clothing before reuse.

Storage:
Keep out of the reach of children. Store level and keep dry. Dewpoint or other conditions causing the presence of moisture can damage the product during storage.

Section 8: EXPOSURE CONTROLS / PERSONAL PROTECTION

Exposure Guidelines

Ingredient	CAS #	Exposure Limits OSHA-PEL	Exposure Limits ACGIH-TLV
Gypsum ($CaSO_4$)	7778-18-9	15 mg/m³ (total); 5 mg/m³ (resp)	10 mg/m³ (total)
Continuous filament glass fibers	65997-17-3	Not available.	1 f/cc TWA (respirable fibers: length > 5 µm, aspect ratio equal to or greater than 3:1, as determined by the membrane filter method at 400-450X magnification (4-mm) objective), using phase-contrast illumination.); 5 mg/m^3 TWA (inhalable fraction) related to continuous filament glass fibers).
Silica, crystalline, quartz	14808-60-7	((10 mg/m^3)/(%SiO_2+2) TWA (resp)); ((30 mg/m^3)/(%SiO_2+2) TWA (total)); ((250)/(%SiO_2+5) mppcf TWA (resp))	0.025 mg/m³

Engineering Controls: Score and snap method recommended. Do not use power saw. Provide local and general exhaust ventilation to keep airborne dust concentrations below exposure limits. Use wet methods, if appropriate, to reduce the generation of dust.

Personal Protective Equipment:

Eye/Face Protection: Safety glasses or goggles are recommended when working with the product. Ensure compliance with OSHA's PPE standards (29 CFR 1910.132 (general) and 133 (eye and face protection)). Safety shower/eye wash fountain must be readily available in the workplace area (29 CFR 1910.151(c)).

Skin Protection: Impervious protective clothing and gloves recommended to prevent drying or irritation of hands. Ensure compliance with OSHA's PPE standards (29 CFR 1910.132 (general) and 138 (hand protection)). Safety shower/eye wash fountain must be readily available in the workplace area (29 CFR 1910.151(c)).

Respiratory Protection: A NIOSH approved dust mask or filtering facepiece is recommended in poorly ventilated areas or when permissible exposure limits may be exceeded. Respirators should be selected by and used under the direction of a trained health and safety professional following requirements found in OSHA's respirator standard (29 CFR 1910.134) and ANSI's standard for respiratory protection (Z88.2).

Section 9: PHYSICAL AND CHEMICAL PROPERTIES

Appearance:	Gypsum boards.
Color:	Facing color varies.
Odor:	No odor.
Odor Threshold:	Not available.
Physical State:	Solid.
pH:	6-8
Viscosity:	Not applicable.
Freezing Point:	Not applicable.
Boiling Point:	Not applicable.
Flash Point:	Not applicable.

Evaporation Rate:	Not available.
Lower Flammability Limit:	Not applicable.
Upper Flammability Limit:	Not applicable.
Vapor Pressure:	Not applicable.
Vapor Density:	Not applicable.
Specific Gravity:	2.2 - 2.4
Solubility in Water:	0.2% @ 22°C
Coefficient of Water/Oil Distribution:	Not available.
Auto-ignition Temperature:	Not applicable.
Percent Volatile, wt. %:	Not available.
VOC content, wt. %:	Not available.

Section 10: STABILITY AND REACTIVITY

Stability: Stable under normal storage conditions.

Conditions of Reactivity: Contact with strong acids produces carbon dioxide.

Incompatible Materials: None known.

Hazardous Decomposition Products: May include, and are not limited to: calcium oxide and sulfur dioxide.

Possibility of Hazardous Reactions: No dangerous reaction known under conditions of normal use.

Section 11: TOXICOLOGY INFORMATION

EFFECTS OF ACUTE EXPOSURE

Component Anaylsis

Ingredient	LD_{50} (oral)	LC_{50}
Gypsum (calcium sulfate)	Not available.	Not available.
Continuous filament glass fibers	Not available.	Not available.
Silica, crystalline, quartz	Not available.	Not available.

EFFECTS OF CHRONIC EXPOSURE

Target Organs: Lungs.

Chronic Effects: Hazardous by OSHA/WHMIS criteria.
Respirable crystalline silica in the form of quartz or cristobalite from occupational sources is listed by the International Agency for Research on Cancer (IARC) and National Toxicology Program (NTP) as a lung carcinogen.

Prolonged exposure to respirable crystalline silica has been known to cause silicosis, a lung disease, which may be disabling. While there may be a factor of individual susceptibility to a given exposure to respirable silica dust, the risk of contracting silicosis and the severity of the disease is clearly related to the amount of dust exposure and the length of time (usually years) of exposure.

In 1987, IARC classified continuous filament glass fibers as a Group 3 substance, “not classifiable as to its carcinogenicity to humans”. In 2001, IARC reaffirmed this designation. Continuous filament glass fibers are not considered respirable due to their large diameter.

Carcinogenicity: Hazardous by OSHA/WHMIS criteria.

Ingredient	Chemical Listed as Carcinogen or Potential Carcinogen
Silica, crystalline, quartz	**ACGIH -** A2 - Suspected human carcinogen; **IARC -** 1 - The agent is carcinogenic to humans; **NTP -** 1 - Known to be carcinogens

Mutagenicity; Reproductive Effects; Teratogenicity; Embryotoxicity; Respiratory Sensitization; Skin Sensitization: Not hazardous by OSHA/WHMIS criteria.

Toxicologically Synergistic Materials: Not available.

Section 12: ECOLOGICAL INFORMATION

Ecotoxicity: Not considered to be harmful to aquatic life.

		LC/EC$_{50}$
Freshwater Fish Species Data:		
Gypsum (calcium sulfate)	7778-18-9	96 Hr LC50 Lepomis macrochirus: 2980 mg/L (static)
Water Flea Data:		
Gypsum (calcium sulfate)	7778-18-9	120 Hr EC50 Nitscheria linearis: 3200 mg/L

Section 13: DISPOSAL CONSIDERATIONS

Disposal Instructions:
This product, if discarded as supplied, is not considered a hazardous waste under Federal Waste Regulations 40 CFR 261. If processing, use, or contamination alters the material, the waste must be tested using methods described in 40 CFR 261 to determine if it meets applicable definition of hazardous waste.

Section 14: TRANSPORTATION INFORMATION

DOT Classification
Not regulated

TDG Classification
Not regulated

Section 15: REGULATORY INFORMATION

Federal Regulations

Canadian: This product has been classified in accordance with the hazard criteria of the Controlled Products Regulations and the MSDS contains all the information required by the Controlled Products Regulations.

US: MSDS prepared pursuant to the Hazard Communication Standard (CFR29 1910.1200).

SARA Title III

Ingredient	Section 302 (EHS) TPQ (lbs.)	Section 304 EHS RQ (lbs.)	CERCLA RQ (lbs.)	Section 313
Gypsum (calcium sulfate)	Not listed. Not listed.	Not listed.	Not listed.	Not listed.
Continuous filament glass fibers		Not listed.	Not listed.	Not listed.
Silica, crystalline, quartz	Not listed.	Not listed.	Not listed.	Not listed.

Georgia-Pacific

MATERIAL SAFETY DATA SHEET

Glass Mat Faced Gypsum Panels

ID: GP-072

Global Inventories

Ingredient	Canada DSL/NDSL	USA TSCA
Gypsum (calcium sulfate)	DSL	Yes.
Continuous filament glass fibers	DSL	Yes.
Silica, crystalline, quartz	DSL	Yes.

HMIS - Hazardous Materials Identification System

Health - 1* **Flammability -** 0 **Physical Hazard -** 0

NFPA - National Fire Protection Association:

Health - 1 **Fire -** 0 **Reactivity -** 0

Hazard Rating: 0 = minimal, 1 = slight, 2 = moderate, 3 = severe, 4 = extreme

WHMIS Classification(s):

Class D2A - Carcinogenicity
Class D2A - Chronic Toxic Effects

WHMIS Hazard Symbols:

Section 16: OTHER INFORMATION

Other Information:

Products on this MSDS do not contain asbestos.

Product List:

DensArmor®
Dens Armor Plus® Abuse Guard ® Paperless Interior Drywall
DensArmor® FIREGUARD® C DensArmor Plus®
Interior Panel
DensArmor Plus® FIREGUARD® Interior Panel
DensArmor Plus® FIREGUARD® C Dens-Core®
DensDeck DuraGuard® Roof Board
DensDeck® Roof Board
DensDeck® FIREGUARD® Roof Board DensDeck Prime®
Roof Board DensGlass Gold® Exterior Sheathing
DensGlass Gold® FIREGUARD® Exterior Sheathing
DensGlass Silver® Residential Sheathing DensGlass® Ultra
Shaftliner™ Guard DensMarine® Bulkhead Panel
DensShield® FIREGUARD® Tile Guard DensShield® Tile
Backer

Georgia-Pacific

MATERIAL SAFETY DATA SHEET

ID: GP-072

Glass Mat Faced Gypsum Panels

Disclaimer:
IMPORTANT: The information and data herein are believed to be accurate and have been compiled from sources believed to be reliable. It is offered for you consideration, investigation and verification. Buyer assumes all risk of use, storage and handling of the product in compliance with applicable federal, state and local laws and regulations. Georgia-Pacific and its subsidiaries make no warranty of any kind, expressed or implied, concerning the accuracy or completeness of the information and data herein. The implied warranties of merchantability and fitness for a particular purpose are specifically excluded. Georgia-Pacific and its subsidiaries will not be liable for claims that the information and data are inaccurate, incomplete or otherwise misleading.

Supercedes: 01/14/05

Prepared by: Georgia-Pacific LLC
(404) 652-5119 (MSDS Request)

Material Safety Data Sheet

NCFI
POLYURETHANES
P.O. Box 1528 • Mount Airy, NC 27030-1528
336.789.9161 • Fax 336.789.9586 • www.NCFI.com

Dalton, GA Hickory, NC High Point, NC Mount Airy, NC Salt Lake City, UT

PRODUCT IDENTIFICATION

Trade Name: NCFI 23-002 Series R
Chemical Name: Mixture
Synonyms: Polyurethane Resin
Chemical Family: Polyol Resin System
Formula: N/A
Date Prepared: 04/13/05

INGREDIENTS-HAZARD CLASSIFICATION

Name:	CAS NO.	%	PEL
1,1,1,3,3-Penta Fluoropropane[1] ($CF_3CH_2CHF_2$ or HFC-245fa)	460-73-1	10	None Established. 300 ppm TWA recommended.
Tertiary Amine Catalysts[1]		<1	None Established.

[1] Not listed as a carcinogen (NTA, IARC, OSHA)

SHIPPING INFORMATION

Not regulated when shipped by land, water or air.

PHYSICAL DATA

Boiling Point (°F):, $CF_3CH_2CHF_2$, 60°F
Solubility in Water: Slight
Appearance and Odor: Brown liquid, ethereal odor
Specific Gravity: 1.23
% Volatile by Volume: 10

FIRE AND EXPLOSION HAZARD DATA

Flash Point (test method): After $CF_3CH_2CHF_2$evaporation, >200°F (P-M)
Extinguishing Media: Water, dry chemicals, CO_2
Flammable Limits (vapor) Lower: None; Upper: None
Special Fire Fighting Procedures: A self-contained breathing apparatus should be worn to protect against toxic and irritating vapors.
Unusual Fire and Explosion Hazards: Overheated containers may rupture due to pressure produced by $CF_3CH_2CHF_2$. $CF_3CH_2CHF_2$ burns to form acids and noxious gases.

REACTIVITY DATA

Stability: Stable
Conditions to Avoid: Temperatures over 85°F
Polymerization: Will not occur
Conditions to Avoid: N/A
Incompatibility: Isocyanates and other chemicals that react with hydroxyl groups.
Hazardous Decomposition Products: When burned; CO, CO_2, NO_x, aliphatic fragments, halogens, halogen acids and possibly carbonyl halides.

Material Data Safety Sheet (MSDS)
Bamboo Flooring

This MSDS relates to Smith & Fong Plyboo bamboo flooring products.
ANSI Format

1. PRODUCT IDENTIFICATION

	Manufacturing Location
Unfinished vertical and horizontal grain bamboo flooring	Company headquarters, South San Francisco, CA, USA
Prefinished vertical and horizontal grain bamboo flooring	Company headquarters, South San Francisco, CA, USA
Unfinished bamboo strand flooring	Company headquarters, South San Francisco, CA, USA
Prefinished bamboo strand flooring	Company headquarters, South San Francisco, CA, USA

Product Composition: Timber bamboo (Moso), kiln dried and laminated.

Manufacturer's Information:
Manufacturer Name: Smith & Fong Company, Inc.
Manufacturer Address: 375 Oyster Point Blvd, Suite 3
South San Francisco, CA 94080 USA

Emergency Phone: (650) 872-1184
Additional Phone: (866) 835-9859
Website: www.plyboo.com
Email: dino@plyboo.com

Synonyms: Bamboo flooring

2. HAZARDOUS INGREDIENTS

Name	CAS#	Percent	Regulatory Agency	Exposure Limits	Comments
Bamboo	N/A	99-99.5	OSHA	PEL-TWA 15 mg/m3	Total dust
			OSHA	PEL-TWA 5 mg/m3	Respiratory dust fraction
			ACGIH	TLV-TWA 3 mg/m3	Respiratory dust fraction
			ACGIH	TLV-TWA 10 mg/m3	Inhalable particles
Urea Formaldehyde resin[1] (bamboo flooring)	9011-05-6	1-.05	OSHA	PEL-TWA 0.75 ppm	Free gaseous
			OSHA	PEL-STEL 2 ppm	Free gaseous
			ACGIH	TLV-Ceiling 0.3 ppm	Free gaseous
Phenol Formaldehyde (bamboo strand flooring)	N/A	1.0	N/A		
UV Finish Polyurethane	N/A	0-.02	OSHA	PEL-TWA none	None
			ACGIH	TLV-TWA none	None

3. HAZARD IDENTIFICATION

Appearance and Odor: A natural or amber bamboo fiber with no, to a slight odor.

Primary Health Hazards: The health hazards of primary concern are exposure to dust particulate generated during machining, cutting, sanding, etc.

Primary Route(s) of Exposure: (X) Dust; (X) Inhalation: Dust or gas.

Medical Conditions Generally Aggravated by Exposure: Respiratory conditions or allergies.

Chronic Health Hazards: Bamboo dust has not been associated with long term chronic respiratory conditions.

Carcinogencity:
(X) NTP: Formaldehyde, Group 1
(X) IARC Monographs: Formaldehyde, Group 1
(X) OSHA Regulated: Formaldehyde

4. EMERGENCY AND FIRST-AID PROCEDURES

Ingestion: Not applicable.

Eye Contact: Dust in eye should be treated as a foreign object; flush with water several times. If irritation persists, seek medical attention.

Skin Contact: Although not typical, contact dermatitis in sensitive individuals can occur. Frequent handling of product can cause skin dryness, slight abrasion, cuts or slivers. Hands should be washed after handling. Seek medical attention if needed.

Skin Absorption: Under normal use, does not occur.

Inhalation: Highly sensitive individuals may experience respiratory difficulties. Bamboo dust can cause nasal irritation, cough or sneezing. Leave area and go to fresh air. Seek medical attention if respiratory difficulties or cough become severe, or nasal irritation persists.

5. FIRE AND EXPLOSION

Flash Point Method: N/A

Flammable Limits: N/A

Extinguishing Media: Water, water fog, carbon dioxide, sand or dry chemical.

Autoignition Temperature: Variable (400-500 F)

Special Firefighting: None.

Unusual Fire/Explosion Hazards: None.

6. ACCIDENTIAL RELEASE MEASURES

Dust generated from cutting, sanding and related machining may be shoveled or vacuumed and properly disposed of. A NOISH-approved dust respirator should be worn if dust exposure limits are exceeded.

7. HANDLING AND STORAGE

Precautions to be Taken In Handling and Storage: No special handling required in product purchase form. Product should be kept in cool, dry environment and not exposed to high heat or flame. Store in well-ventilated area.

8. EXPOSURE CONTROL MEASURES

Personal Protective Equipment:

RESPIRATORY PROTECTION: Not required, however a NOISH-approved dust respirator is recommended for high dust producing activities.
PROTECTIVE GLOVES: Not required, however work gloves are recommended to avoid sliver and splinters from machining or handling product.
EYE PROTECTION: Not required, however eye protection when machining or milling any material is highly recommended.
OTHER PROTECTIVE CLOTHING OR EQUIPMENT: Not required.
WORK/HYGIENE PRACTICES: Clean up dusty areas to avoid excess accumulation. Minimize practices that generate high air-borne dust particles.

Ventilation:

LOCAL EXHAUST: Provide local exhaust as needed.

MECHANICAL: Good ventilation in processing and storage areas should be provided.

9. PHYSICAL/CHEMICAL PROPERTIES

Boiling Point:	N/A
Vapor Pressure:	N/A
Vapor Density:	N/A
Specific Gravity:	0.58g/ml
Melting Point:	N/A
Evaporation Rate	N/A
Solubility in Water	<0.1
% Volatile by Vol	0
Percent Moisture	6%-9%

10. STABILITY AND REACTIVITY

Stability: (X) Stable

Conditions to Avoid: Excessive moisture, condensation or water vapor. Open flame or conditions above 400 F.

Incompatibility (Materials to Avoid): Oxidizing agents.

MATERIAL SAFETY DATA SHEET

SierraPine LTD
COMPOSITE SOLUTIONS

Product Name: SierraPine® Rocklin MDF

Date Prepared: 09/01/05

1. Composite Panel Product and Company Identification

Product Identifier: Unfinished Medium Density Fiberboard (MDF) Panels
General use: Re-manufacturing, construction and furniture processes.
Product Description: A panel product manufactured from ligno-cellulosic materials bonded together with a synthetic resin or other suitable binder, and which may contain additives.

MANUFACTURER:
SierraPine
4300 Dominguez Road
Rocklin, CA 95677

EMERGENCY TELEPHONE NUMBERS:
(916) 624-2473

2. COMPOSITION/INFORMATION ON INGREDIENTS

	Wt %	CAS Registry #
Ligno-cellulosic Materials	85 - 94	N/A
Polymerized Urea Formaldehyde Resin	6 - 15	9011-05-6

OSHA HAZARDOUS COMPONENTS (29 CFR 1910.1200):

	EXPOSURE LIMITS
Formaldehyde CAS Registry # 50-00-0	OSHA PEL – TWA: 0.75 PPM OSHA PEL – STEL: 2 PPM ACGIH TLV – Ceiling: 0.30 PPM
Wood Dust/Ligno-cellulosic fiber [1, 2]	OSHA PEL – TWA 15.0 mg/m^3 (total dust) [3] 5.0 mg/m^3 (respirable fraction)
Wood Dust/Ligno-cellulosic fiber, Inhalable Fraction [3]	ACGIH TLV – TWA: 1.0 mg/m^3

1. In AFL-CIO v. OSHA 965 F. 2d 962 (11th Cir. 1992), the court overturned OSHA's 1989 Air Contaminants Rule, including the specific PELs for wood dust that OSHA had established at that time.

The 1989 PELs were: TWA – 5.0 mg/m^3 : STEL (15 min.) – 10.0 mg/m^3 . These were total dust test based limits.[3] A common practice since 1989 has been to meet and exceed the lower 1989 limits which were supported by the wood products industry.

2. Wood dust is now officially regulated as an organic dust under the Particulates Not Otherwise Regulated (PNOR) or Inert or Nuisance Dust categories at PELs noted in the Composition/Information on Ingredients section of this MSDS. However, a number of states have incorporated provisions of the 1989 standard in their state plans. Additionally, OSHA has announced that it may cite companies under the OSH Act General Duty Clause under appropriate circumstances for non-compliance with the 1989 PELs.

3. Considerable debate continues to surround the inhalable-to-total dust conversion factor. ACGIH has proposed to use a ratio of 2.5 "for interpreting studies with exposure measurements based on total dust sampling" for purposes of defining a TLV for inhalable dust. However, a recent NIOSH paper states "In the case of exposures to wood dust, several studies with side-by-side sampling have revealed that inhalable sampling will increase the apparent dustiness of an atmosphere by between 150 and 400%, with an average closer to the higher end of this range." [citing Harper (2002), Martin (1998), Tatum (2001), among others].

3. HAZARDS IDENTIFICATION

EMERGENCY OVERVIEW:
The product may release small quantities of formaldehyde in gaseous form. Emissions decrease through time as the panels age. Manual or mechanical cutting or abrasion processes performed on the product can result in generation of ligno-cellulosic fibers.

POTENTIAL HEALTH EFFECTS:

ACUTE

INHALATION:
Gaseous formaldehyde may cause temporary irritation to nose and throat. Some reports suggest that formaldehyde may cause respiratory sensitization, such as asthma, and that pre-existing respiratory disorders may be aggravated by exposure.
Ligno-cellulosic fibers may cause nasal dryness, irritation and obstruction. Coughing, wheezing, sneezing, sinusitis and prolonged colds have also been reported.

EYE CONTACT:
Gaseous formaldehyde may cause temporary irritation or a burning sensation. Ligno-cellulosic fibers can cause mechanical irritation.

SKIN CONTACT:
Both formaldehyde solutions (liquid) and various species of ligno-cellulosic fibers may evoke allergic contact dermatitis in sensitized individuals.

INGESTION:
Not likely to occur.

CHRONIC

Some reports suggest that formaldehyde may cause respiratory sensitization, such as asthma, and that pre-existing respiratory disorders may be aggravated by exposure. Other studies show no impact on respiratory sensitization. International Agency for Research on Cancer (IARC) classifies formaldehyde as a carcinogen to humans (Group 1). This classification is based primarily on IARC's evaluation of increased risk in the occurrence of cancers in the nasopharyngeal cavity (NPC) associated with occupational exposure to formaldehyde. The National Toxicology Program (NTP) includes formaldehyde in its Annual Report on carcinogens. OSHA regulates formaldehyde as a potential cancer agent.

In studies involving rats, formaldehyde has been shown to cause nasal cancer after long-term exposure to very high concentrations (14+ PPM), far above those normally found in the workplace.

Ligno-cellulosic fibers, depending on species, may cause respiratory sensitization and/or irritation. IARC classifies wood dust as a carcinogen to humans (Group 1). This classification is based primarily on IARC's evaluation of increased risk in the occurrence of adenocarcinomas of the nasal cavities and paranasal sinuses associated with exposure to wood dust. IARC did not find sufficient evidence to associate cancers of the oropharynx, hypopharynx, lung, lymphatic and hematopoietic systems, stomach, colon or rectum with exposure to wood dust. The National Toxicology Program (NTP) includes wood dust in its Annual Report on carcinogens.

HMIS Ratings:	Health: 1	Fire: 0	Physical Hazard: 0
Hazard Scale:	*0 = Minimal*	*1 = Slight*	*2 = Moderate 3 = Serious 4 = Severe*

4. FIRST AID MEASURES

INHALATION:
Ligno-cellulosic fibers may cause unpleasant obstruction in the nasal passages, resulting in dryness of nose, dry cough, sneezing and headaches. Remove to fresh air. Get medical attention if irritation persists, severe coughing or breathing difficulty occurs.

EYE CONTACT:
Ligno-cellulosic fibers may cause mechanical irritation. Treat dust in eye as foreign object. Flush eyes with large amounts of water. Remove to fresh air. If irritation persists, get medical attention.

SKIN CONTACT:
Wash affected areas with soap and water. Get medical attention if rash or irritation persists or dermatitis occurs.

INGESTION:
Not Applicable.

5. FIRE FIGHTING MEASURES

FIRE FIGHTING HAZARD:
Wood is classified as a Class A combustible material.

FLASHPOINT AND METHOD:
Not Applicable.

FLAMMABLE LIMITS:

LFL: Ligno-cellulosic fibers: 40 grams per cubic meter of air

AUTOIGNITION TEMPERATURE:

1) 275 C (527 F): Source: Textbook of Wood Technology 4th Edition, A.J. Panshin & Carl de Zeeuw, 1980, McGraw-Hill Book Company New York, NY.
   200 C (392 F): Source: Principles of Fire Protection, Arthur E. Cote and Percy

2) Bugbee, 1988, National Fire Protection Association, Quincy, MA.

3) It is difficult to identify the specific ignition temperature of wood because of the large number of variables involved. Source: Essentials of Fire Fighting 4th Fourth Edition, 1998, Edited by Richard Hall and Barbara Adams, Fire Protection Publications, Oklahoma State University, Stillwater, OK.

4) Ignition of wood takes place when wood is subject to sufficient heat and in atmospheres that have sufficient oxygen. Ignition can be of two types: piloted or unpiloted. Piloted ignition occurs in the presence of an ignition source (such as a spark or flame). Unpiloted ignition is ignition that occurs where no pilot source is available. The surface temperature of wood materials has been measured somewhere between 300 C and 400 C (572 F to 752 F) prior to piloted ignition. Unpiloted ignition depends on special circumstances that result in different ranges of ignition temperatures. At this time, it is not possible to give specific ignition data that apply to a broad range of cases. With convection heating of wood, unpiloted ignition has been reported as low as 270 C (518 F) and as high as 470 C (878 F). Source: Wood Handbook Wood as an Engineering Material, 1999, Forest Products Laboratory, U.S. Department of Agriculture, Madison, WI.

FIRE FIGHTING INSTRUCTIONS:
Fire fighting procedures for extinguishing a Class A fire should be followed.
Source: Essentials of Fire Fighting 4th Fourth Edition, 1998, Edited by Richard Hall and Barbara Adams, Fire Protection Publications, Oklahoma State University, Stillwater, OK.

1) When extinguishing a fire in a ligno-cellulosic fibers or fiber pile care needs to be taken. A direct stream of water, into the pile from a hose, could cause the burning material to become airborne creating a risk in spreading the fire to other areas. Source: Handbook of Industrial Loss Prevention, 1967, Factory Mutual Engineering Corporation, McGraw-Hill Book Company New York, NY.

2) Water is used to quench the burning material below its ignition temperature. The addition of Class A foams (sometimes referred to as wet water) may enhance water's ability to extinguish Class A fires, particularly those that are deep seated in bulk materials (such as piles of hay bales, sawdust piles, etc.). This is because the Class A foam agent reduces the water's surface tension, allowing it to penetrate more easily into piles of material. Class A fires are difficult to extinguish using oxygen-exclusion methods like CO_2 flooding or coating with foam because these methods do not provide the cooling effect needed for total extinguishment. Source: Essentials of Fire Fighting 4th Fourth Edition, 1998, Edited by Richard Hall and Barbara Adams, Fire Protection Publications Oklahoma State University, Stillwater, OK.

FIRE FIGHTING EQUIPMENT:
Use recommended Class A fire fighting equipment when fighting an incipient fire.
Source: Essentials of Fire Fighting 4th Fourth Edition, Edited by Richard Hall and Barbara Adams, Fire Protection Publications, Oklahoma State University, Stillwater, OK.

UNUSUAL FIRE OR EXPLOSION HAZARDS:
Sawing, sanding or machining can produce ligno-cellulosic fibers as a by-product that may present an explosion hazard.

NFPA Rating for Wood Dust (Scale 0-4):	Health = 1
	Fire = 1
	Reactivity = 0

Refer to the National Fire Protection Association's standard 664 "Standard for the Prevention of Fires and Explosions in Wood Processing and Woodworking Facilities" for more details on wood dust explosions. Copies of this standard are available from the NFPA web site www.nfpa.org)

6. ACCIDENTAL RELEASE MEASURES

LAND SPILL:
Generally not applicable to panel products, however if a spill occurs the applicable federal, provincial, state, and local regulations must be followed.

WATER SPILL:
Generally not applicable to panel products, however if a spill occurs the applicable federal, provincial, state and local regulations must be followed.

7. HANDLING AND STORAGE

STORAGE:
This product should not be stored where exposure to water could occur or near a source of ignition. Avoid storing in areas of high relative humidity and temperature. High temperature and inadequate ventilation could allow concentrations of gaseous formaldehyde in the storage area. Adequate ventilation of the storage area will help reduce the build-up of the gaseous formaldehyde. It is recommended to store product in an area of relative humidity and temperature that approximates end use.

Refer to the Composite Panel Association (CPA) Technical Bulletin titled *"Storage and Handling of Particleboard and MDF" for further information*. Available on website www.pbmdf.com

8. EXPOSURE CONTROLS/PERSONAL PROTECTION

ENGINEERING CONTROLS:
Certain activities of the re-manufacturing process of this product could possibly produce ligno-cellulosic fibers or gaseous formaldehyde. Provide adequate general and local exhaust ventilation to keep airborne contaminant concentration levels below the applicable levels.

PERSONAL PROTECTIVE EQUIPMENT (PPE)

RESPIRATOR:
Wear NIOSH/MSHA approved respirator when the allowable exposure limits may be exceeded.

PROTECTIVE CLOTHING:
Wear side shield safety glasses during the re-manufacturing of this product. Other protective equipment such as gloves and outer garments may be needed depending on dust conditions.

GENERAL HYGIENE:
Practice proper personal hygiene.

9. PHYSICAL AND CHEMICAL PROPERTIES

Physical Description: light to dark colored solid, color and odor are dependent on the wood species.

Boiling Point: not applicable	pH: not applicable
Evaporation Rate: not applicable	Solubility in Water (% by weight): Insoluble
Freezing Point: not applicable	Specific Gravity: generally < 1
Melting Point: not applicable	Vapor Density: not applicable
Molecular Formula: not applicable	Vapor Pressure: not applicable
Molecular Weight: not applicable	Viscosity: not applicable
Oil-Water Distribution Coefficient: not applicable	% Volatile by volume (70°F): not applicable

10. STABILITY AND REACTIVITY

STABILITY:
Stable under normal conditions.

REACTIVITY:
Avoid product contact with open flame and any temperature sources that could induce thermal decomposition. Avoid product contact with oxidizing agents, drying oils and strong acids. For further information on the reactivity of wood products, refer to Chapter 17 of the Wood Handbook (Wood Handbook Wood as an Engineering Material, 1999, Forest Products Laboratory, U.S. Department of Agriculture, Madison, WI

HAZARDOUS DECOMPOSITION:
Thermal and/or thermal-oxidative decomposition can produce irritating and toxic fumes and gases, including carbon monoxide, hydrogen cyanide, polynuclear aromatic hydrocarbons, aldehydes and organic acids.

HAZARDOUS POLYMERIZATION:
Will not occur.

11. TOXICOLOGICAL INFORMATION

Wood Dust:

Wood dust (softwood or hardwood: OSHA Hazard Rating = 3.3; moderately toxic with probable oral lethal dose to humans being 0.5 – 5 g/kg (about 1 pound for a 70 kg or 150 pound person). Source: OSHA Regulated Hazardous Substances, Government Institutes, Inc., February 1990.

Wood dust (generated from sawing, sanding or machining the product) may cause nasal dryness, irritation, coughing and sinusitis. National Toxicology Program (NTP) and the International Agency for Research on Cancer (IARC) classify wood dust as a human carcinogen (IARC Group 1). This classification is based primarily on increased risk in the occurrence of adenocarcinomas of the nasal cavities and paranasal sinuses associated with exposure to wood dust. The evaluation did not find sufficient evidence to associate cancers of the oropharynx, hypopharynx, lung, lymphatic and hematopoietic systems, stomach, colon or rectum with exposure to wood dust.

Formaldehyde:

OSHA Hazard Rating = 3 for local and systemic acute and chronic exposures; highly toxic. Irritation studies: human skin, 150 ug/3 days, intermittent exposure produce mild results; human eye, 1 ppm/6 minutes produced mild results. Toxicity studies: human inhalation TC_{LO} of 17 mg/m^3 for 30 minutes produced eye and pulmonary results; human inhalation TC_{LO} of 300 ug/m^3 produced nose and central nervous system results; LC_{50} (rat, inhalation = 1000 mg/m^3 , 30 minutes; LC_{50} (mice, inhalation = 400 mg/m^3 , 120 minutes.

Exposure to gaseous formaldehyde at elevated levels may cause temporary irritation to the nose and throat as well as lead to respiratory disorders. However, in a thorough review of sensory/respiratory irritation studies of formaldehyde from the standpoint of occupational exposure, an expert panel has observed that exposure up to concentrations of 0.3 ppm failed to produce irritation. With regard to respiratory disorders, studies have concluded the threshold for long term chronic pulmonary effects is between 0.4 and 3 ppm and for chronic obstructive pulmonary disease is 2 ppm. Pre-existing respiratory disorders may be aggravated by exposure.

Epidemiology studies of workers exposed to formaldehyde have failed to consistently identify an association between formaldehyde exposure and cancer. In animal studies, rats and mice exposed to high levels of formaldehyde developed nasal cancer while hamsters did not. These exposure levels are far above those levels normally found in the workplace. Formaldehyde is classified by IARC as carcinogenic to humans (Group 1). A working group of IARC has determined that there is sufficient evidence that formaldehyde causes nasopharyngeal cancer in humans, a rare cancer in developed countries. NTP

included formaldehyde in the annual report on carcinogens. OSHA regulates formaldehyde as a potential carcinogen for exposures exceeding 0.5 ppm.

Sources: OSHA Regulated Hazardous Substances. Government Institutes, Inc., February 1990; Registry of Toxic Effects of Chemical Substances (RTECS), national Institute for Occupational Safety and Health, Canadian Centre for Occupational Health and Safety, CCINFO May 1995.

Additional Toxicity Date: See acute and chronic health effects provided in Section 3: Hazard identification.

Target Organs: See acute and chronic health effects provided in Section 3: Hazard Identification.

12. ECOLOGICAL INFORMATION

Ecotoxicity

A. General Product Information

Not available for product in purchased form. See Component Analysis.

B. Component Analysis – Aquatic Toxicity Formaldehyde (50-00-0)

Test & Species		Conditions
96 Hr LC_{50} fathead minnow	24.1 mg/L	flow through
96 Hr LC_{50} bluegill	0.10 mg/L	flow through
5 min EC_{50} photobacterium phosphorium	9.0 mg/L	
15 min EC_{50} photobacterium phosphorium	7.26 mg/L	
25 min EC_{50} photobacterium phosphorium	6.81 mg/L	
96 Hr EC_{50} water flea	20 mg/L	

Environmental Fate

Not available for product in purchased form.

13. DISPOSAL CONSIDERATIONS

General Product Information

This panel product is recyclable. It is the user's responsibility to determine at the time of disposal whether your product meets any applicable criteria for hazardous waste disposal. Disposal must follow applicable federal, provincial, state and local regulations.

EPA Waste Number & Descriptions

This product in purchased form is not considered hazardous waste under federal hazardous waste regulations 40 CFR 261. If the product is altered by processing, use or contamination, waste can be tested using methods described in 40 CFR 261 to determine whether the altered product meets the criteria for hazardous waste.

State, provincial and local requirements for waste disposal may be different than U.S. federal regulations.

Disposal Instructions
If disposed or discarded in its purchased form, ordinary trash collection is acceptable. It is the user's responsibility to determine at the time of disposal whether your product meets RCRA criteria for hazardous waste. Follow applicable federal, state, provincial and local regulations.

14. TRANSPORT INFORMATION

Department of Transportation (DOT): This product is not a DOT hazardous material.

It is the purchaser's responsibility to see if this product meets any regulations depending on their location.

15. REGULATORY INFORMATION

US Federal Regulations

A. General Product Information

OSHA: Wood products are not hazardous under the criteria of the Federal OSHA Hazard communication Standard 29 CFR 1910.1200. However, formaldehyde emissions and wood dust generated by sawing, sanding or machining this product may be hazardous. This product contains formaldehyde.

HUD: The Department of Housing and Urban Development (HUD) regulation 24 CFR 3280 sets emission standards and provides for 3rd party certification of particleboard and MDF formaldehyde emissions.

ANSI A208.2-2002 MEDIUM DENSITY FIBERBOARD (MDF): This industry-consensus standard limits formaldehyde emissions from MDF. SierraPine® MDF is voluntarily manufactured and certified to this standard of formaldehyde emissions.

B. Component Analysis
This material contains one or more of the following chemicals required to be identified under SARA Section 302 (40 CFR 355 Appendix A), SARA Section 313 (40 CFR 372.65) and/or CERCLA (40 CFR 302.4).
Formaldehyde (50-00-0)
SARA 302: 500lb. TPQ
CERCLA: 100lb final RQ; 45.4 kg final RQ

State Regulations

Component Analysis – State
The following components appear on one or more of the following state hazardous substances lists and may also appear on similar lists in states not on the chart:

Component	CAS	CA	MA	MN	NJ	PA	RI
Formaldehyde	50-00-0	yes	yes	yes	yes	yes	yes
Wood dust, all soft and hard woods	none	no	no	yes	no	yes	yes

Additional Regulatory Information

Component Analysis – WHMIS IDL
No components are listed in the WHMIS IDL.

Component Analysis – Inventory

Component	CAS#	TSCA	CAN	EEC
Formaldehyde	50-00-0	yes	DSL	EINECS

16. OTHER INFORMATION

DEFINITIONS OF ACRONYMS:

ACGIH: American Conference of Governmental Industrial Hygienists
ANSI: American National Standards Institute
C: Ceiling Limit
CAS: Chemical Abstract Services Number
CERCLA: Comprehensive Environmental Response Compensation & Liability Act
CFR : Code of Federal Regulations
CWA : Clean Water Act
DOT: Department of Transportation
EC_{50}: Effective concentration that inhibits enpoints for 50% of control population
EPA: Environmental Protection Agency
FDA: Food and Drug Administration
HCS: Hazard Communication Standard
HMIS: Hazard Material Information System
IARC: International Agency for Research on Cancer
LC_{LO} Lowest lethal concentration of a substance
LC_{50} Concentration of a material expected to kill 50% of an animal text group
LD_{LO} Lowest lethal dose of a material
LD_{50} Dose of a material expected to kill 50% of an animal text group
LEL: Lower Explosive Limit

LFL: Lower Flammability Limit
MSHA: Mining Safety and Health Administration
NA: Not Applicable
NFPA: National Fire Protection Association
NIOSH: National Institute for Occupational Safety and Health, U.S. Public Health Service, U.S. Department of Health and Human Services
NPRI: Canadian National Pollution Release Inventory
NTP: National Toxicology Program
OSHA: Occupational Safety and Health Administration, U.S. Department of Labor
PEL: Permissible Exposure Limit
PPE: Personal Protective Equipment
RCRA: Resource Conservation and Recovery Act
RQ: Reportable Quantity
SARA: Superfund Amendments and Reauthorization Act
STEL: Short Term Exposure Limit
STP: Standard Temperature and Pressure
TC_{LO}: Lowest concentration in air resulting in a toxic effect
TDG: Canadian Transportation of Dangerous Goods
TLV: Threshold Limit Value
TSCA: Toxic Substances Control Act
TWA: Time-weighted Average
UFL: Upper Flammable Limit
WHMIS: Workplace Hazardous Material Information System

DISCLAIMER:

This information was believed to be accurate at the time of preparation, and compiled from sources believed to be reliable. Products and/or articles manufactured from this product may have characteristics that are significantly different; therefore, it is the user's responsibility to investigate and understand other pertinent information and to comply with all applicable laws and regulations. There is no warranty of any kind, express or implied, concerning product or merchantability or fitness thereof for any purpose. Buyer assumes all risk of use, storage and handling of the product in compliance with applicable Federal, State and local laws and regulations. SierraPine, a California limited partnership, will not be liable for claims relating to any party's use of or reliance on information and data contained herein regardless of whether it is claimed the information and data are inaccurate, incomplete or otherwise misleading.

Hazardous Decomposition or By-Products: Thermal decomposition by-products include carbon monoxide, carbon dioxide, aliphatic adelhydes, rosin acids, terpens, and polycyclic aromatic hydrocarbons.

Hazardous Polymerization: Will not occur.

Sensitivity to Mechanical Impact: N/A

Sensitivity to Static Discharge: N/A

11. TOXICOLOGICAL INFORMATION

The product, in finished form, has no reportable toxicological information.

OSHA Formaldehyde Hazard rating = 0.75 ppm for local and systemic acute and chronic exposures; highly toxic. Reference OHSA Regulated Hazardous Substances, Government Institutes, Inc., February 1990.
IARC Formaldehyde Monograph, Vol. 88, 2005. = Group 1.

12. ECOLOGICAL INFORMATION

Bamboo (Moso species) is a rapidly renewable product, and does not contribute to the diminishment of natural wood supplies.

13. DISPOSAL CONSIDERATIONS

Waste Disposal Method: In purchased product form, incineration is the preferred disposal method. Land disposal should be guided by RCRA criteria and local requirements, and determination made if considered hazardous waste.

14. TRANSPORT INFORMATION

Not regulated as a hazardous material by U.S. Department of Transportation.
Not listed as hazardous material in Canadian Transportation of Hazardous Goods regulations.

15. REGULATORY INFORMATION

Chemicals listed:
IARC Monograph, Formaldehyde CAS # 50-00-0
Canadian Domestic Substance List, Formaldehyde CAS #50-00-0

Not a controlled Workplace Hazardous Material Systems product.

State Right to Know:

- California Prop 65 – This product contains formaldehyde which may be emitted from product. Formaldehyde is a compound that is known in the State of California to cause cancer. Smith & Fong Company has emission-tested its products for formaldehyde, and finds the emissions rates to be well below a significant risk level that would require product warnings.

- Pennsylvania – This product contains formaldehyde which depending on humidity and temperature may be emitted from product.

SARA Section 313 Information:
This product contains formaldehyde at a concentration that lists it with the chemical to SARA Title III, Section 313 supplier notification requirements. This product falls considerably below the Threshold Planning Requirement for Formaldehyde of 500 lbs.

SARA Section 311/312 Hazard Category
Under the above referenced category, and reviewed against definitions, the product meets:

- An immediate (acute) health hazard - yes – dust only
- A delayed (chronic) health hazard – no
- A fire hazard – no
- A reactivity hazard – no
- A sudden release hazard – no

16. ADDITIONAL INFORMATION

Prepared by: Smith & Fong Company, Inc.
Date Prepared: 07/01/01
Date Revised: 08/01/06

USER RESPONSIBILITY: The information contained in this MSDS comes from sources believed to be accurate or otherwise technically correct, and information from occupational health and safety professionals, and regulatory agencies. It is the user's responsibility to determine if this information is suitable for their applications, and to follow safety precautions as necessary. The user has the responsibility to make sure that this sheet is the most up-to-date initial or revision issue.

Glossary of Acronyms and Terms

ACGIH	American Conference of Government Industrial Hygienists
C	Ceiling limit
CAS#	Chemical Abstracts Numbering System
DSL	Canadian Domestic Substance List
EPA	U.S. Environmental Protection Agency
IARC	International Agency for Research on Cancer
LCLo	Lowest concentration in air resulting in death
LC50	Administered dose resulting in death to 50% of experimental animals
LDLo	Lowest dose resulting in death
MSHA	Mining Safety and Health Administration
ND	Not determined
N/A	Not applicable
NAV	Not available
NIOSH	National Institute for Occupational Safety and Health
NTP	National Toxicology Program
OSHA	Occupational Safety and Health Administration
PEL	Permissible Exposure Level
PPM	Parts of gas or vapor per million parts of air
RCRA	Resource Conservation and Recovery Act
SARA	Superfund Amendments and Reauthorization Act
STEL	Short-Term Exposure Limit (15 minutes)
TDG	Canadian Transportation of Dangerous Goods
TCLo	Lowest concentration in air resulting in a toxic effect
TDLo	Lowest dose resulting in a toxic effect
TLV	Threshold Limit Value
TSCA	Toxic Substance Control Act
TWA	Time-Weighted Average (8 hours)
WHMIS	Workplace Hazardous Materials Information System

MATERIAL SAFETY DATA SHEET

RICHLITE® Natural Fiber Composite

Section 1: Ingredients

Chemical Family: Cured Phenol-formaldehyde
Product Use: Various within modeling and pattern making industries.
Hazard Statement: This material safety data sheet (MSDS) has been prepared in compliance with the Federal OSHA Hazard Communication Standard 29 CFR 1910.1200. This product in not considered to be a hazardous chemical under that standard.

Section 2: Physical Data

Appearance: Tan, odorless flat sheets
Percent Volatile: 0 (zero)
Insoluble in water
Specific Gravity: 1.24

Section 3: Fire and Explosion Data

Extinguishing media: Self extinguishing; remove source of heat.
Special fire fighting procedures: Use self-contained breathing apparatus.
Unusual fire and explosion data: Combustion products may be toxic.

Section 4: Reactivity Data

Stability: Stable
Conditions to Avoid: Excessive Heat for prolonged periods.
Incompatibility: Very strong alkali
Hazardous Decomposition Products: Combustion may form toxic materials. Oxides of carbon and nitrogen, benzene, toluene, methane, phenol, formaldehyde.
Hazardous Polymerization: Will not occur.

Section 5: Health Hazard Data

Primary Routes of Exposure: Eye, dermal, ingestion or inhalation of dust from abraded material.
Threshold Limit Value: Not hazardous
Overexposure effects: Completely crosslinked phenol-formaldehyde resin is inert and non-toxic.
Eye Contact: Dust that contacts the eye may be irritating or cause mechanical injury.
Skin Contact: May cause slight skin irritation.
Ingestion: It is reasonable to anticipate ingestion of the dust would be irritating to the GI tract.
Inhalation: Dust may be irritating to the respiratory tract and cause coughing or sneezing.

Section 6: First Aid Measures

Eyes: Immediately flush eyes with water for at least 15 minutes. See a physician if irritation persists.
Skin: Wash with soap and water. See a physician if irritation persists.
Ingestion: No harmful effects anticipated. See a physician if irritation persists.
Inhalation: No harmful effects are anticipated. If a problem develops, remove the person to fresh air and supply of oxygen if necessary.

Section 7: Special Protection Information

Ventilation: General mechanical and local exhaust in accordance with ACGIH recommendations.
Protective Gloves: Wear gloves as a standard handling procedure.
Eye Protection: Dust-tight goggles are recommended during material abrading operations.
Respiratory Protection: Use NIOSH approved dust mask if required.

Section 8: Special Precautions

Handling precautions: Nuisance dust may be generated during some material machining processes.

Section 9: Regulatory Information

DOT Proper shipping name: Plastic Laminate Sheets
DOT Hazard Class: N/A
RCRA Status: Not a hazardous waste under RCRA (40 CFR 261)
SARA/TITLE III - Toxic chemicals list: This product does not contain a toxic chemical for routine annual toxic chemical release reporting under
Sec. 313 (40 CFR 372)

Issued 1/1/98 by R. Snyder, Product Safety Director

Rainier Plywood Co. d.b.a.
RAINIER RICHLITE COMPANY
624 E. 15th Street – Tacoma, WA 98421
1(888)383-5533

SAFETY DATA SHEET

IN ACCORDANCE WITH 91/155/EEC AND ISO 11014-1

Date: 14.02.2005

1. Product and company identification

• Product name	:	CORKLINOLEUM
• Product code	:	
• Manufacturer/supplier	:	Forbo Linoleum B.V.
Address	:	Industrieweg 12
City	:	1566 JP Assendelft
Telephone	:	+31 (0)75 647 7477
Telefax	:	+31 (0)75 621 5466

2. Composition/Information on ingredients

• Composition	:	Floor covering based on a binder composed of linseed oil and (natural) rosin, mixed with granulated cork and lime stone and pressed on a jute backing.
• Hazardous ingredients	:	None.

3. Hazards identification

- No health danger.
- No environmental effect.

4. First-aid measures:

• Eyes	:	N.A.
• Skin	:	N.A.
• Inhalation	:	N.A.
• Ingestion	:	N.A.

5. Fire-fighting measures

• Suitable fire-fighting media	:	Water, foam, CO_2, powder.
• Specific hazards	:	None.

6. Accidental release measures

• Personal precautions	:	N.A.
• Environmental precautions	:	N.A.
• Methods for cleaning up	:	N.A.

7. Handling and storage

• Handling	:	No special requirement.
• Storage	:	No special requirement.

8. Exposure controls/personal protection

• Personal protective equipment	:	N.A.
• Respiratory protection	:	N.A.
• Hand protection	:	N.A.
• Eye protection	:	N.A.
• Skin and body protection	:	N.A.

SAFETY DATA SHEET

IN ACCORDANCE WITH 91/155/EEC AND ISO 11014-1

9. Physical and chemical properties

• Physical state	:	Solid.
• Form	:	Flexible sheet.
• Colour	:	Various colours.
• Odour	:	Weak 'linseed oil' smell.
• pH	:	N.A.
• Decomposition temperature	:	Approx. 450° C
• Flashpoint	:	N.A.
• Explosion properties	:	N.A.
• Density	:	0.70 - 0.80 g/cm^3.
• Solubility	:	Not soluble in water or conventional solvents.

10. Stability and reactivity

• Hazardous decomposition products	:	Product is stable.
• Hazardous reactions	:	No hazardous reactions.

11. Toxicological information

No toxicological effects on human health.

12. Ecological information

• Ecological effects	:	No negative ecological effects are known.
• Solubility in water	:	Insoluble in water.

13. Disposal considerations

In accordance with local or state regulations.

14. Transport information

Product is not considered as dangerous and is not submitted to special transport regulations.

15. Regulatory information

No special information obliged.

16. Further information

Safety data sheet issued by : F.W. Seifert

Fourth version: 14.02.2005

The information in this Safety Data Sheet is based upon present knowledge and experience.
The actual facts do not give any information about the qualities and properties of the product.

SAFETY DATA SHEET

In accordance with 91/155/EEC and ISO 11014-1

Date: 1 June 2005 Page: 1 van 4

1. Product and company identification

Product name:	Marmoleum Click
Manufacturer/supplier:	Forbo Flooring
Address:	Industrieweg 12
City:	1566 JP ASSENDELFT
Telephone:	+31 75 647 74 77
Telefax:	+31 75 621 54 66

2. Composition/Information on ingredients

Composition: Linoleum floor covering laminated to HDF board on a backing of granulated cork sheet

Ingredients:

Linoleum:	Linoleum based on a binder composed of linseed oil and (natural) rosin, mixed with woodflour and limestones pressed on a jute backing.
HDF:	Mixed softwood 80-85% Remainder comprises: polymerised resin, paraffin wax, moisture, free formaldehyde (EN 14041-Class E1)
Cork sheet backing	Granulated cork with polymerised resin

3. Hazards identification

Health hazard:	Non classifiable
Specific hazards:	Not applicable

SAFETY DATA SHEET

In accordance with 91/155/EEC and ISO 11014-1

4. First-aid measures

Eyes:	If particles enter the eyes during processing immediately flush eyes with plenty of water. Seek medical attention if irritation persists.
Skin contact:	In case of irritation from dust generated by processing of HDF, wash with water.
Inhalation:	Inhalation of HDF dust can only occur during processing. If inhalation of dust causes adverse effects, remove to fresh air. If discomfort persists, seek medical advise.

5. Fire-fighting measures

Suitable fire-fighting media:	Water, foam, CO2, powder
Specific hazards:	None

6. Accidental release measures

Personal precautions:	N.a.
Environmental precautions:	N.a.
Methods for cleaning up:	N.a.

7. Handling and storage

7.1	Handling:	No special requirements
7.2	Storage:	No special requirements

SAFETY DATA SHEET

In accordance with 91/155/EEC and ISO 11014-1

8. Exposure controls/personal protection

8.1 Exposure control
During processing, adequate ventilation and/or extraction should be provided to minimise airborne dust from the HDF.

8.2 Personal protection:
Dust from the HDF will be created during processing; use appropriate respiratory protection equipment. Wear gloves as required to prevent skin contact. Wear eye protection to prevent dust particles from entering eyes.

9. Physical and chemical properties

Physical state:	Solid, floor covering laminated to HDF board on a backing of granulated cork sheet
Form:	Panel and tile
Colour:	Linoleum: various colours and/or patterns HDF: light green Cork sheet: brown
Odour:	Linoleum: weak "linseed oil" smell HDF: None Cork sheet: None
Density:	Linoleum:1150 - 1250 kg/m^3 HDF: 800 - 900 kg/m^3 Cork sheet: 220 kg/m^3
Solubility:	Linoleum, HDF and cork sheet are not solvable in water or conventional solvents

10. Stability and reactivity

Considered stable and inert.

11. Toxicological information

No toxicological effects on human health.

SAFETY DATA SHEET

In accordance with 91/155/EEC and ISO 11014-1

12. Ecological information

Not solvable in water.
No negative ecological effects are known.

13. Disposal considerations

In accordance with local or state regulations.

14. Transport information

The product is not considered as dangerous and is not submitted to transport regulations.

15. Regulatory information

Regulations on formaldehyde content.
The HDF board fulfils the requirement of EN 14041 class E1.
National regulations may deviate from EN 622-1.
Marmoleum Click complies with the following national regulations:

- Denmark:
  Danish building regulations BR1982 and BR1985.
- Germany:
  "Chemikalien verbotsverordnung - ChemVerbots V" (Ordinance on the prohibition of Chemicals). Annex to paragraph 1, clause 3 of 14 October 1993.

16. Further information

Safety Data Sheet made by: F.W. Seifert

First version: 01 June 2005

The information in this Safety Data Sheet is based upon the present knowledge and experience.
The actual facts do not give any information about the qualities and properties of the product.

M A T E R I A L S A F E T Y D A T A S H E E T

MANUFACTURER

C-Cure 6511 Salt Lake Ave., Bell, CA 90201

Emergency Phone: 213-582-0846
Contact Person: Alan Kin

SECTION I - IDENTITY

CURECAULK 986 REF: CAULK 986

Chemical Name or Synonyms: Aqueous acrylic latex caulk.

Hazardous Ingredients/Identity Information

Hazardous Components: Acrylic polymer (CAS-Non-Haz)
OSHA PEL: NE
ACGIH TLV: NE

Hazardous Components: Titanium dioxide (TD) (CAS-13463-67-7)
OSHA PEL: NE
ACGIH TLV: NEmg/m3res, other limits 2.0

Hazardous Components: Inorganic Filler (CAS Mixture) 70%
OSHA PEL: 15
ACGIH TLV: 10mg/m3, other limits 10

Hazardous Components: Mineral Spirits (CAS-8032-32-4) 5%
OSHA PEL: 500
ACGIH TLV: 100ppm, other limits 200

Hazardous Components: Butyl Benzyl Phtahatate (CAS-85-68-7) 15%
OSHA PEL: NE
ACGIH TLV: NE, Other Limits NE

Hazardous Components: Water (CAS-Non-Haz) 30%
OSHA PEL: NE
ACGIH TLV: NE, Other Limits NE

SECTION II - Physical/Chemical Characteristics

Boiling Point:	Variable	Specific Gravity:	(H2O=<1)
Vapor Pressure:	<1	Melting Point:	Variable
Vapor Density:	(Air=1) >1	Evaporation Rate:	>1
Solubility in Water:	Dilutable %	Volatile:	Variable

Appearance and Odor: Milky white paste - mild odor.

SECTION III - Fire and Explosion Hazard Data

Flash Point: NA Flammable: NA
Extinguishing Media: NA
Special Fire Fighting Procedures: NA
Unusual Fire and Explosion Hazards: Material can splatter above

100/212 F. Polymer film can burn.

SECTION IV - Reactivity Data
Stability - Stable
Incompatibility - NA
Hazardous Decomposition products - NA
Hazardous Polymerization - Will Not Occur
Conditions to Avoid - NA

NA-NOT APPLICABLE ND=NOT DETERMINED DATE PREPARED: 1/01/96

REF: CAULK 986

SECTION V - Health Hazard Data

Recommended Work Place Exposure Limits: TWA=SEE Section I= 10mg/m3 TD resp; 125 ppm.

Effects of Overexposure:

Inhalation: Vapor or mist can cause irritation of the nose, throat and lungs & cause headache & nausea.

Skin Contact: Irritating to skin upon repeated or prolonged contact.

Eye Contact: Slightly irritating to eyes.

Emergency First Aid Procedures:

Inhalation: Move subject to fresh air.

Eyes & Skin Contact: Flush eyes with large amount of water for at least 15 minutes. See a physician if irritation persists. wash affected skin areas with soap and water.

Ingestion: If swallowed, dilute by giving 2 glasses of water to drink. See a physician.

Note: Titanium dioxide when formulated as above does not pose a dust hazard unless sanding or grinding of the dry coating takes place.

The TWA for inorganic filler are those for nuisance dust.

SECTION VI - Control and Protective Measures

Respirable Protection: wear suitable respirator (OSHA/NIOSH-approved equivalent). Where exposure limits are determined. Eliminate exposure to dust, use OSHA approved mask for silica dust, if freshly mixed mortar gets into eyes or contacts skin-flush immediately & repeatedly with water & contact physician immediately.

Protective Gloves: Impervious

Eye Protection: Chemical splash goggles (ANSI 2-87.1 or approved equivalent).

Ventilation to be Used: Mechanical local exhaust ventilation at point of contaminant release.

Note to Physician: Petroleum hydrocarbons can cause CNS effects. If swallowed, careful evacuation of the stomach is advisable.

SECTION VII - Precautions for Safe Handling and Use

Spill or Leak Procedure: Keep spectators away. Floor may be slippery, use care to avoid falling. Scoop or shovel solid material into a suitable container for recovery or disposal. Keep spills and cleaning runoffs out of municipal sewers and open bodies of water.

Waste Disposal: When discarded this material contains a listed hazardous ingredient (butyl benzyl phthalate); reportable "Superfund" incinerate the solids at permitted facility according to local, state an federal regulations.

Storage and Handling: Precautionary Labeling: KEEP FROM FREEZING

MATERIAL SAFETY DATA SHEET

Prepared according to 29 CFR 1910.1200

N/A = Not applicable

Revised 1/15/03

SECTION 1 - PRODUCT IDENTIFICATION

Trade Name : Safecoat Safe Seal
Product I.D.# & Color: 3104 Clear
Product Class: Waterborne Acrylic Polymer Emulsion
D.O.T. Labels/Placards Required: No
OSHA Class: 29CFR 1910.1200 Non-hazardous
SARA TITLE III Emergency & Community Right to Know
Section 311/312 Categorizations (40 CFR 370): Not a hazardous chemical
Section 313 Information (40 CFR 372): This product does not contain a chemical which is listed in Section 313 above de minimis

:

_____ concentrations.

SECTION 2 – INGREDIENTS

Water CAS #: 7732-18-5 Weight Percent: 60 – 65
Acrylic Copolymer Emulsion CAS #: Mixture Weight Percent: 15 - 20
Exposure limits: None assigned Vapor Pressure 17 mm Hg @ 68 F
Acrylic Polymer Mixture CAS #: Mixture Weight Percent: 15 – 20
Exposure limits: None assigned Vapor Pressure 17 mm Hg @ 68 F
Dipropylene glycol methyl ether CAS #: 34590-94-8 Weight Percent: < 3
OSHA – 100 ppm (600 mg/m3) (skin)
NIOSH – 100 ppm (600 mg/m3) ST 150 ppm (900 mg/m3)
Vapor Pressure 0.5 mm Hg @ 77 F
Skin TWA 8 hours - STEL 150 ppm 15 minutes

Suspected Cancer Agents : Federal OSHA: No NTP: NO IARC: No None known.
HMIS Codes: H-1 F-0 R-0 P-B

SECTION 3 - PHYSICAL DATA

Physical Description: Viscous liquid, low odor, mildly alkaline.
Boiling Point: .....100 C/212 F
Melting Point: .....N/A
Vapor Density:.....Heavier than air
% Volatile by Volume: 82.46%
LBS/GAL Theoretical: .....8.44 +or- .15
Solubility in Water: .....Dilutable
Vapor Pressure, mmHg @ 20degC: .....N/A
Evaporation Rate:.....Slower than ether
% Volatile by Weight:.....82.00%
Specific Gravity (Water=1):.....1.01
VOC Material:.....12 g/l, 0.10 lb./gal
VOC Material less H20: .....64 g/l, 0.53 lb./gal

SECTION 4 - FIRE & EXPLOSION HAZARD DATA

Flash Point : N/A non-combustible
Flammable limits in air, volume % - lower LEL : 1.1 Upper UEL : 3.0
Fire Extinguishing Media : Water, carbon dioxide, dry chemical
Personal Protective Equipment : Self-contained breathing apparatus (pressure-demand MSHA/NIOSH approved or equivalent) and full protective gear may be worn if desired, but not necessary for normal use.
Autoignition Temp : N/A
Special Fire Fighting Procedures : Use water (fog) to cool closed containers. Wear self contained breathing apparatus.
Unusual Fire & Explosion Hazards : Closed containers may explode due to the build up of steam pressure when exposed to extreme heat. Material can splatter above 100°C/212°F. Polymer film can burn.

SECTION 5 - HEALTH HAZARD INFORMATION & FIRST AID

Threshold Limit Value : See Section 2 for hazardous ingredient information

Symptoms of Overexposure

Symptoms and Effects of Short Term Exposure : Acute. Primary route of entry:

Swallowing: Unknown.

Inhalation: Inhalation-spray mists may cause mild respiratory irritation.

Eye Contact: Liquid splashed into the eye may cause transient eye irritation.

Skin Absorption: None known.

Symptoms and Effects of Repeated Overexposure : Chronic - None known.

Medical Conditions Generally Aggravated by Exposure : None known.

Emergency & First Aid Procedures :

Inhalation: Remove from exposure. Provide plenty of fresh air.
Splash (eyes): Flush immediately with large amounts of water for at least 15 minutes, lifting upper and lower eyelids occasionally. Take to a physician for medical treatment.
Splash (skin): Remove with soap and water. Remove contaminated clothing. Supply copious amounts of fresh water to the skin areas to rinse material away.
Ingestion (Swallowing): Consult with physician, hospital emergency room, or poison control center immediately. Only if conscious, give 2 glasses of water to drink.
Notes to Physician: Any treatment that might be required for overexposure should be directed at the control of symptoms and the clinical conditions.

SECTION 6 - REACTIVITY DATA

Stability : Stable, however avoid temperatures above 177°C/350°F, the onset of polymer decomposition.
Incompatibility (materials to avoid): Avoid materials that are water reactive, highly alkaline or highly acidic.
Hazardous Decomposition by-products : CO, CO2 on combustion
Hazardous Polymerization : Will not occur.
Conditions to Avoid : Excess heat may cause containers to rupture. Avoid temperatures below 45°F or freezing conditions.

SECTION 7 - SPILL, DISPOSAL PROCEDURES; ENVIRONMENTAL DATA

Steps to be taken in case material is released or spilled : Confine in small area; contain and remove with inert absorbent (sand, earth, etc.). Place in proper container for proper disposal. CAUTION - Keep out of waterways, drains, sewers by diking. Keep spectators away. Floor may be slippery. Use care to avoid falling.
Waste Disposal Method : Place contaminated material in suitable sealed metal containers for disposal. Do not incinerate closed containers. Use non leaking containers, seal tightly and label properly. Do not pour contaminated paint back into unused paint. Do not throw liquid paint into the trash. Where allowed by local laws (check with local regulatory agencies) allow liquid waste materials to dry out before disposing into trash containers. Take all liquid unused paint that cannot be used to approved recycling centers, paint roundups, or county facilities that are approved to take unused paint at collection sites. Contact state, county, city health services or fire departments to find nearest collection centers. Do not dispose of waste into water streams or storm water sewers. Do not mix with other kinds of waste. Dispose all waste in accordance with local, state and federal regulations.
RCRA Classification : As produced, this product is not a waste. If discarded as is, it is not classified a “Hazardous” waste under RCRA. This product is not ignitable, corrosive, reactive, or toxic; therefore is not defined as hazardous by the EPA.
Environmental Hazards : None known.

SECTION 8 - SPECIAL PROTECTION INFORMATION

Respiratory Protection : If applied by spraying, use an appropriate, properly fitted NIOSH/MSHA approved respirator to remove spray mist. Good room (mechanical) ventilation should be sufficient protection against vapors from product. If further protection is desired or if persons are sensitive to vapors, use a respirator with a NIOSH/MSHA approval number TC-23C-860 or TC-23C-87 or an equivalent. Refer to OSHA 29 CFR 1910.134, “Respiratory Protection”.
Ventilation: General (mechanical) room ventilation is expected to be satisfactory.
Protective Gloves : None required under most conditions. If protection is desired, plastic, nitrile or latex rubber will provide adequate protection.
Eye Protection : Safety glasses or goggles with side shields if splashing may occur. Use goggles when spraying, ANSI Z87.1 or approved equivalent.
Other Protection : Eye wash or copious amounts of water as a precautionary measure is suggested. Other equipment not likely to be needed.

SECTION 9 - STORAGE & SPECIAL HANDLING

Storage Temperature : Min. 45degF - Max. 120degF/Indoor and outdoor = OK
This product should be stored at room temperature to prolong shelf life. Keep containers in a cool, dry place. Avoid subjecting this product to extreme temperature variations and freezing. Adverse conditions can cause emulsion coagulation.
KEEP CONTAINER CLOSED. KEEP OUT OF REACH OF CHILDREN. DO NOT TAKE INTERNALLY. DO NOT GET IN EYES. IF PRODUCT IS SPRAYED, PREVENT PROLONGED OR REPEATED BREATHING OF SPRAY MIST. USE ADEQUATE VENTILATION WHEN USING THIS PRODUCT. USE GOOD HYGIENE PRACTICES AND WASH AFTER USING PRODUCT.

NOTICE: The data and recommendations presented herein are based upon our research and the research of others, and are believed to be accurate. No

MATERIAL SAFETY DATA SHEET

Prepared according to 29 CFR 1910.1200

N/A = Not applicable

Revised 10/15/98

SECTION 1 - PRODUCT IDENTIFICATION

Trade Name: Safecoat Flat Pastel Base Zero VOC
Product I.D.# & Color: 1411 White
Product Class: Waterborne Polymer Emulsion
Supplier's Name: American Formulating & Manufacturing
Telephone #: (619) 239-0321 Fax # 619-239-0565
Address: 3251 Third Avenue, San Diego, CA 92103
Emergency Phone (MSDS Information): (619) 239-0321 or (562) 693-0872
D.O.T. Emergency Phone Number: (562) 693-0872
US DOT Hazard Shipping Class: Not regulated - aqueous
D.O.T. Labels/Placards Required: No
OSHA Class: 29CFR 1910.1200 Non-hazardous
SARA TITLE III Emergency & Community Right to Know:
Section 311/312 Categorizations (40 CFR 370): Not a hazardous chemical
Section 313 Information (40 CFR 372): This product does not contain a chemical which is listed in Section 313 above de minimis concentrations.

SECTION 2 - HAZARDOUS INGREDIENTS

This product contains no known hazardous ingredients.
Suspected Cancer Agents: Federal OSHA: No NTP: NO IARC: No
None known.

SECTION 3 - PHYSICAL DATA

Physical Description: Viscous liquid, low odor, mildly alkaline, white (if not tinted). Very mild paint odor.

Boiling Point:	(Water) 190-212F
Melting Point:	N/A
Vapor Density:	Heavier than air
% Volatile by Volume:	73.00%
LBS/GAL Theoretical:	11.85 +or- .15
Solubility in Water:	Dilutable
Vapor Pressure, mmHg @ 20degC:	N/A
Evaporation Rate:	Slower than ether
% Volatile by Weight	66.00%
Specific Gravity (Water=1):	1.42
VOC Material:	zero
VOC Material less H20:	zero

SECTION 4 - FIRE & EXPLOSION HAZARD DATA

Flash Point: N/A non-combustible
Flammable limits in air, volume % - lower LEL: N/A **Upper UEL**: N/A
Fire Extinguishing Media: Water, carbon dioxide, dry chemical
Personal Protective Equipment: Self-contained breathing apparatus (pressure-demand MSHA/NIOSH approved or equivalent) and full protective gear may be worn if desired, but not necessary for normal use.
Autoignition Temp.: N/A
Special Fire Fighting Procedures: Use water (fog) to cool closed containers. Wear self contained breathing apparatus.
Unusual Fire & Explosion Hazards: Closed containers may explode due to the build up of steam pressure when exposed to extreme heat. Material can splatter above 100°C/212°F. Polymer film can burn.

SECTION 5 - HEALTH HAZARD INFORMATION & FIRST AID

Threshold Limit Value: See Section 2 for hazardous ingredient information

Symptoms of Overexposure

Symptoms and Effects of Short Term Exposure: Acute. Primary route of entry:
Swallowing: May cause gastrointestinal irritation, nausea, vomiting and diarrhea.
Inhalation: Inhalation-spray mists may cause mild respiratory irritation.
Eye Contact: Liquid splashed into the eye may cause transient eye irritation.
Skin Absorption: None known.
Symptoms and Effects of Repeated Overexposure: Chronic - None known.
Medical Conditions Generally Aggravated by Exposure: None known.

Emergency & First Aid Procedures:

Inhalation: Remove from exposure. Provide plenty of fresh air.
Splash (eyes): Flush immediately with large amounts of water for at least 15 minutes, lifting upper and lower eyelids occasionally. Take to a physician for medical treatment.
Splash (skin): Remove with soap and water. Remove contaminated clothing. Supply copious amounts of fresh water to the skin areas to rinse material away.
Ingestion (Swallowing): Consult with physician, hospital emergency room, or poison control center immediately. Only if conscious, give 2 glasses of water to drink.
Notes to Physician: Any treatment that might be required for overexposure should be directed at the control of symptoms and the clinical conditions.

SECTION 6 - REACTIVITY DATA

Stability: Stable, however avoid temperatures above 177°C/350°F, the onset of polymer decomposition.
Incompatibility (materials to avoid): Avoid materials that are water reactive, highly alkaline or highly acidic.
Hazardous Decomposition by-products: CO, CO2 on combustion
Hazardous Polymerization: Will not occur.
Conditions to Avoid: Excess heat may cause containers to rupture. Avoid temperatures below 45°F or freezing conditions.

SECTION 7 - SPILL, DISPOSAL PROCEDURES; ENVIRONMENTAL DATA

Steps to be taken in case material is released or spilled: Confine in small area; contain and remove with inert absorbent (sand, earth, etc.). Place in proper container for proper disposal. CAUTION - Keep out of waterways, drains, sewers by diking. Keep spectators away. Floor may be slippery. Use care to avoid falling.
Waste Disposal Method: Place contaminated material in suitable sealed metal containers for disposal. Do not incinerate closed containers. Use non leaking containers, seal tightly and label properly. Do not pour contaminated paint back into unused paint. Do not throw liquid paint into the trash. Where allowed by local laws (check with local regulatory agencies) allow liquid waste materials to dry out before disposing into trash containers. Take all liquid unused paint that cannot be used to approved recycling centers, paint roundups, or county facilities that are approved to take unused paint at collection sites. Contact state, county, city health services or fire departments to find nearest collection centers. Do not dispose of waste into water streams or storm water sewers. Do not mix with other kinds of waste. Dispose all waste in accordance with local, state and federal regulations.
RCRA Classification: As produced, this product is not a waste. If discarded as is, it is not classified a "Hazardous" waste under RCRA. This product is not ignitable, corrosive, reactive, or toxic; therefore is not defined as hazardous by the EPA.
Environmental Hazards: None known.

SECTION 8 - SPECIAL PROTECTION INFORMATION

Respiratory Protection: If applied by spraying, use an appropriate, properly fitted NIOSH/MSHA approved respirator to remove spray mist. Good room (mechanical) ventilation should be sufficient protection against vapors from product. If further protection is desired or if persons are sensitive to vapors, use a respirator with a NIOSH/MSHA approval number TC-23C-860 or TC-23C-87 or an equivalent. Refer to OSHA 29 CFR 1910.134, "Respiratory Protection".
Ventilation: General (mechanical) room ventilation is expected to be satisfactory.
Protective Gloves: None required under most conditions. If protection is desired, plastic, nitrile or latex rubber will provide adequate protection.
Eye Protection: Safety glasses or goggles with side shields if splashing may occur. Use goggles when spraying, ANSI Z87.1 or approved equivalent.
Other Protection: Eye wash or copious amounts of water as a precautionary measure is suggested. Other equipment not likely to be needed.

SECTION 9 - STORAGE & SPECIAL HANDLING

Storage Temperature: Min. 45degF - Max. 120degF/Indoor and outdoor = OK
This product should be stored at room temperature to prolong shelf life. Keep containers in a cool, dry place. Avoid subjecting this product to extreme temperature variations and freezing. Adverse conditions can cause emulsion coagulation.
KEEP CONTAINER CLOSED. KEEP OUT OF REACH OF CHILDREN. DO NOT TAKE INTERNALLY. DO NOT GET IN EYES. IF PRODUCT IS SPRAYED, PREVENT PROLONGED OR REPEATED BREATHING OF SPRAY MIST. USE ADEQUATE VENTILATION WHEN USING THIS PRODUCT. USE GOOD HYGIENE PRACTICES AND WASH AFTER USING PRODUCT.

NOTICE: The data and recommendations presented herein are based upon our research and the research of others, and are believed to be accurate. No guarantee of their accuracy is made, however, and the product discussed is distributed without warranty, expressed or implied, and the person receiving such product shall make his own determination of the suitability thereof for his particular purpose.

MATERIAL SAFETY DATA SHEET

Prepared according to 29 CFR 1910.1200

N/A = Not applicable

Revised 1/15/03

SECTION 1 - PRODUCT IDENTIFICATION

Trade Name: Safecoat Semigloss Pastel Base Zero VOC
Product I.D.# & Color: 1412 White
Product Class: Waterborne Polymer Emulsion
Supplier's Name: American Formulating & Manufacturing
Telephone #: (619) 239-0321 Fax # 619-239-0565
Address: 3251 Third Avenue, San Diego, CA 92103
Emergency Phone (MSDS Information): (619) 239-0321 or (562) 693-0872
D.O.T. Emergency Phone Number: (562) 693-0872
US DOT Hazard Shipping Class: Not regulated - aqueous
D.O.T. Labels/Placards Required: No
OSHA Class: 29CFR 1910.1200 Non-hazardous
SARA TITLE III Emergency & Community Right to Know:
Section 311/312 Categorizations (40 CFR 370): Not a hazardous chemical
Section 313 Information (40 CFR 372): This product does not contain a chemical which is listed in Section 313 above de minimis concentrations.

SECTION 2 – INGREDIENTS

Acrylic Emulsion Copolymer CAS #: Mixture Weight Percent: 55 – 60
Vapor Pressure 17 mm Hg @ 68 F
Water CAS #: 7732-18-5 Weight Percent: 15 – 20
Titanium Dioxide CAS #: 13463-67-7 Weight Percent: 20 – 25
Pigment dust when dry or sanded ACGIH TLV 10 mg/m3 total dust

Suspected Cancer Agents: Federal OSHA: No NTP: NO IARC: No None known.
HMIS Codes: H-1 F-0 R-0 P-B

SECTION 3 - PHYSICAL DATA

Physical Description: Viscous liquid, low odor, mildly alkaline, white (if not tinted). Very mild paint odor.
Boiling Point: .....100 C/212 F
Melting Point: .....N/A
Vapor Density:.....Heavier than air
% Volatile by Volume: 60.35%
LBS/GAL Theoretical: .....10.38 +or- .15
Solubility in Water: .....Dilutable
Vapor Pressure, mmHg @ 20degC: .....N/A
Evaporation Rate:.....Slower than ether
% Volatile by Weight.....48.55%
Specific Gravity (Water=1):.....1.25
VOC Material:.....zero
VOC Material less H20: .....zero

SECTION 4 - FIRE & EXPLOSION HAZARD DATA

Flash Point: N/A non-combustible
Flammable limits in air, volume % - lower LEL: N/A **Upper UEL**: N/A
Fire Extinguishing Media: Water, carbon dioxide, dry chemical
Personal Protective Equipment: Self-contained breathing apparatus (pressure-demand MSHA/NIOSH approved or equivalent) and full protective gear may be worn if desired, but not necessary for normal use.
Autoignition Temp.: N/A
Special Fire Fighting Procedures: Use water (fog) to cool closed containers. Wear self contained breathing apparatus.
Unusual Fire & Explosion Hazards: Closed containers may explode due to the build up of steam pressure when exposed to extreme heat. Material can splatter above 100°C/212°F. Polymer film can burn.

SECTION 5 - HEALTH HAZARD INFORMATION & FIRST AID

Threshold Limit Value: See Section 2 for hazardous ingredient information

Symptoms of Overexposure

Symptoms and Effects of Short Term Exposure: Acute. Primary route of entry:

Swallowing: May cause gastrointestinal irritation, nausea, vomiting and diarrhea.

Inhalation: Inhalation-spray mists may cause mild respiratory irritation.

Eye Contact: Liquid splashed into the eye may cause transient eye irritation.

Skin Absorption: None known.

Symptoms and Effects of Repeated Overexposure: Chronic - None known.
Medical Conditions Generally Aggravated by Exposure: None known.

Emergency & First Aid Procedures:

Inhalation: Remove from exposure. Provide plenty of fresh air.
Splash (eyes): Flush immediately with large amounts of water for at least 15 minutes, lifting upper and lower eyelids occasionally. Take to a physician for medical treatment.
Splash (skin): Remove with soap and water. Remove contaminated clothing. Supply copious amounts of fresh water to the skin areas to rinse material away.
Ingestion (Swallowing): Consult with physician, hospital emergency room, or poison control center immediately. Only if conscious, give 2 glasses of water to drink.
Notes to Physician: Any treatment that might be required for overexposure should be directed at the control of symptoms and the clinical conditions.

SECTION 6 - REACTIVITY DATA

Stability: Stable, however avoid temperatures above 177°C/350°F, the onset of polymer decomposition.
Incompatibility (materials to avoid): Avoid materials that are water reactive, highly alkaline or highly acidic.
Hazardous Decomposition by-products: CO, CO2 on combustion
Hazardous Polymerization: Will not occur.
Conditions to Avoid: Excess heat may cause containers to rupture. Avoid temperatures below 45°F or freezing conditions.

SECTION 7 - SPILL, DISPOSAL PROCEDURES; ENVIRONMENTAL DATA

Steps to be taken in case material is released or spilled: Confine in small area; contain and remove with inert absorbent (sand, earth, etc.). Place in proper container for proper disposal. CAUTION - Keep out of waterways, drains, sewers by diking. Keep spectators away. Floor may be slippery. Use care to avoid falling.
Waste Disposal Method: Place contaminated material in suitable sealed metal containers for disposal. Do not incinerate closed containers. Use non leaking containers, seal tightly and label properly. Do not pour contaminated paint back into unused paint. Do not throw liquid paint into the trash. Where allowed by local laws (check with local regulatory agencies) allow liquid waste materials to dry out before disposing into trash containers. Take all liquid unused paint that cannot be used to approved recycling centers, paint roundups, or county facilities that are approved to take unused paint at collection sites. Contact state, county, city health services or fire departments to find nearest collection centers. Do not dispose of waste into water streams or storm water sewers. Do not mix with other kinds of waste. Dispose all waste in accordance with local, state and federal regulations.
RCRA Classification: As produced, this product is not a waste. If discarded as is, it is not classified a "Hazardous" waste under RCRA. This product is not ignitable, corrosive, reactive, or toxic; therefore is not defined as hazardous by the EPA.
Environmental Hazards: None known.

SECTION 8 - SPECIAL PROTECTION INFORMATION

Respiratory Protection: If applied by spraying, use an appropriate, properly fitted NIOSH/MSHA approved respirator to remove spray mist. Good room (mechanical) ventilation should be sufficient protection against vapors from product. If further protection is desired or if persons are sensitive to vapors, use a respirator with a NIOSH/MSHA approval number TC-23C-860 or TC-23C-87 or an equivalent. Refer to OSHA 29 CFR 1910.134, "Respiratory Protection".
Ventilation: General (mechanical) room ventilation is expected to be satisfactory.
Protective Gloves: None required under most conditions. If protection is desired, plastic, nitrile or latex rubber will provide adequate protection.
Eye Protection: Safety glasses or goggles with side shields if splashing may occur. Use goggles when spraying, ANSI Z87.1 or approved equivalent.
Other Protection: Eye wash or copious amounts of water as a precautionary measure is suggested. Other equipment not likely to be needed.

SECTION 9 - STORAGE & SPECIAL HANDLING

Storage Temperature: Min. 45degF - Max. 120degF/Indoor and outdoor = OK
This product should be stored at room temperature to prolong shelf life. Keep containers in a cool, dry place. Avoid subjecting this product to extreme temperature variations and freezing. Adverse conditions can cause emulsion coagulation.
KEEP CONTAINER CLOSED. KEEP OUT OF REACH OF CHILDREN. DO NOT TAKE INTERNALLY. DO NOT GET IN EYES. IF PRODUCT IS SPRAYED, PREVENT PROLONGED OR REPEATED BREATHING OF SPRAY MIST. USE ADEQUATE VENTILATION WHEN USING THIS PRODUCT. USE GOOD HYGIENE PRACTICES AND WASH AFTER USING PRODUCT.

NOTICE: The data and recommendations presented herein are based upon our research and the research of others, and are believed to be accurate. No guarantee of their accuracy is made, however, and the product discussed is

MATERIAL SAFETY DATA SHEET

Prepared according to 29 CFR 1910.1200

N/A = Not applicable

Revised 1/15/03

SECTION 1 - PRODUCT IDENTIFICATION

Trade Name: Safecoat Transitional Primer
Product I.D.# & Color: 8090 White
Product Class: Acrylic Pigmented Polymer Emulsion
Supplier's Name: American Formulating & Manufacturing
Telephone #: (619) 239-0321 Fax # 619-239-0565
Address: 3251 Third Avenue, San Diego, CA 92103
Emergency Phone (MSDS Information): (619) 239-0321 or (562) 693-0872
D.O.T. Emergency Phone Number: (562) 693-0872
US DOT Hazard Shipping Class: Not regulated - aqueous
D.O.T. Labels/Placards Required: No
OSHA Class: 29CFR 1910.1200 Non-hazardous
SARA TITLE III Emergency & Community Right to Know:
Section 311/312 Categorizations (40 CFR 370): Not a hazardous chemical
Section 313 Information (40 CFR 372): This product does not contain a chemical which is listed in Section 313 above de minimis concentrations.

SECTION 2 - INGREDIENTS

Modified Acrylic Emulsion Copolymer CAS #: Mixture Weight Percent: 45 – 50
Vapor Pressure 17 mm Hg @ 68 F
Nepheline Syenite CAS #: 37244-96-5 Weight Percent: 15 – 20
Water CAS #: 7732-18-5 Weight Percent: 15 – 20
Titanium Dioxide CAS #: 13463-67-7 Weight Percent: 10 – 15
Pigment dust when dry or sanded ACGIH TLV 10 mg/m3 total dust

Suspected Cancer Agents: Federal OSHA: No NTP: NO IARC: No None known.
HMIS Codes: H-1 F-0 R-0 P-B

SECTION 3 - PHYSICAL DATA

Physical Description: Viscous liquid, low odor, mildly alkaline, white (if not tinted). Very mild paint odor.
Boiling Point: .....100 C/212 F
Melting Point: .....N/A
Vapor Density:.....Heavier than air
% Volatile by Volume: 56.89%
LBS/GAL Theoretical: .....10.70 +or- .15
Solubility in Water: .....Dilutable
Vapor Pressure, mmHg @ 20degC: .....N/A
Evaporation Rate:.....Slower than ether
% Volatile by Weight:.....44.91%
Specific Gravity (Water=1):.....1.28
VOC Material:.....9 g/l, 0.08 lb./gal
VOC Material less H20: .....22 g/l, 0.18 lb./gal

SECTION 4 - FIRE & EXPLOSION HAZARD DATA

Flash Point: N/A non-combustible
Flammable limits in air, volume % - lower LEL: N/A **Upper UEL**: N/A
Fire Extinguishing Media: Water, carbon dioxide, dry chemical
Personal Protective Equipment: Self-contained breathing apparatus (pressure-demand MSHA/NIOSH approved or equivalent) and full protective gear may be worn if desired, but not necessary for normal use.
Autoignition Temp.: N/A
Special Fire Fighting Procedures: Use water (fog) to cool closed containers. Wear self contained breathing apparatus.
Unusual Fire & Explosion Hazards: Closed containers may explode due to the build up of steam pressure when exposed to extreme heat. Material can splatter above 100°C/212°F. Polymer film can burn.

SECTION 5 - HEALTH HAZARD INFORMATION & FIRST AID

Threshold Limit Value: See Section 2 for hazardous ingredient information

Symptoms of Overexposure

Symptoms and Effects of Short Term Exposure: Acute. Primary route of entry:
Swallowing: Unknown.
Inhalation: Inhalation-spray mists may cause mild respiratory irritation.
Eye Contact: Liquid splashed into the eye may cause transient eye irritation.
Skin Absorption: None known.
Symptoms and Effects of Repeated Overexposure: Chronic - None known.
Medical Conditions Generally Aggravated by Exposure: None known.

Emergency & First Aid Procedures:
Inhalation: Remove from exposure. Provide plenty of fresh air.
Splash (eyes): Flush immediately with large amounts of water for at least 15 minutes, lifting upper and lower eyelids occasionally. Take to a physician for medical treatment.
Splash (skin): Remove with soap and water. Remove contaminated clothing. Supply copious amounts of fresh water to the skin areas to rinse material away.
Ingestion (Swallowing): Consult with physician, hospital emergency room, or poison control center immediately. Only if conscious, give 2 glasses of water to drink.
Notes to Physician: Any treatment that might be required for overexposure should be directed at the control of symptoms and the clinical conditions.

SECTION 6 - REACTIVITY DATA

Stability: Stable, however avoid temperatures above 177°C/350°F, the onset of polymer decomposition.
Incompatibility (materials to avoid): Avoid materials that are water reactive, highly alkaline or highly acidic.
Hazardous Decomposition by-products: CO, CO2 on combustion
Hazardous Polymerization: Will not occur.
Conditions to Avoid: Excess heat may cause containers to rupture. Avoid temperatures below 45°F or freezing conditions.

SECTION 7 - SPILL, DISPOSAL PROCEDURES; ENVIRONMENTAL DATA

Steps to be taken in case material is released or spilled: Confine in small area; contain and remove with inert absorbent (sand, earth, etc.). Place in proper container for proper disposal. CAUTION - Keep out of waterways, drains, sewers by diking. Keep spectators away. Floor may be slippery. Use care to avoid falling.
Waste Disposal Method: Place contaminated material in suitable sealed metal containers for disposal. Do not incinerate closed containers. Use non leaking containers, seal tightly and label properly. Do not pour contaminated paint back into unused paint. Do not throw liquid paint into the trash. Where allowed by local laws (check with local regulatory agencies) allow liquid waste materials to dry out before disposing into trash containers. Take all liquid unused paint that cannot be used to approved recycling centers, paint roundups, or county facilities that are approved to take unused paint at collection sites. Contact state, county, city health services or fire departments to find nearest collection centers. Do not dispose of waste into water streams or storm water sewers. Do not mix with other kinds of waste. Dispose all waste in accordance with local, state and federal regulations.
RCRA Classification: As produced, this product is not a waste. If discarded as is, it is not classified a "Hazardous" waste under RCRA. This product is not ignitable, corrosive, reactive, or toxic; therefore is not defined as hazardous by the EPA.
Environmental Hazards: None known.

SECTION 8 - SPECIAL PROTECTION INFORMATION

Respiratory Protection: If applied by spraying, use an appropriate, properly fitted NIOSH/MSHA approved respirator to remove spray mist. Good room (mechanical) ventilation should be sufficient protection against vapors from product. If further protection is desired or if persons are sensitive to vapors, use a respirator with a NIOSH/MSHA approval number TC-23C-860 or TC-23C-87 or an equivalent. Refer to OSHA 29 CFR 1910.134, "Respiratory Protection".
Ventilation: General (mechanical) room ventilation is expected to be satisfactory.
Protective Gloves: None required under most conditions. If protection is desired, plastic, nitrile or latex rubber will provide adequate protection.
Eye Protection: Safety glasses or goggles with side shields if splashing may occur. Use goggles when spraying, ANSI Z87.1 or approved equivalent.
Other Protection: Eye wash or copious amounts of water as a precautionary measure is suggested. Other equipment not likely to be needed.

SECTION 9 - STORAGE & SPECIAL HANDLING

Storage Temperature: Min. 45degF - Max. 120degF/Indoor and outdoor = OK
This product should be stored at room temperature to prolong shelf life. Keep containers in a cool, dry place. Avoid subjecting this product to extreme temperature variations and freezing. Adverse conditions can cause emulsion coagulation.
KEEP CONTAINER CLOSED. KEEP OUT OF REACH OF CHILDREN. DO NOT TAKE INTERNALLY. DO NOT GET IN EYES. IF PRODUCT IS SPRAYED, PREVENT PROLONGED OR REPEATED BREATHING OF SPRAY MIST. USE ADEQUATE VENTILATION WHEN USING THIS PRODUCT. USE GOOD HYGIENE PRACTICES AND WASH AFTER USING PRODUCT.

MSDS: MINERAL OIL

MATERIAL SAFETY DATA SHEET

SECTION 1. PRODUCT AND COMPANY IDENTIFICATION

MINERAL OIL
PRODUCT CODE: HH-MINERAL OIL, REFERENCE #: 77601
PRODUCT NAME: MINERAL OIL CHEMICAL FAMILY: Compound

MANUFACTURER NAME AND ADDRESS:TELEPHONE NUMBERS:DATES:
Farnam Companies, Inc.24 hour emergency number(602)285-1660Date Created: 10/04/1994
301 West Osborn RoadBusiness hours(602)285-1660Revision: 04/25/2001
Phoenix, AZ. 85013Marketing(602)285-1660Printed: 01/12/2005

SECTION 2. COMPOSITION/INFORMATION ON INGREDIENTS

MINERAL OIL

HAZARDOUS COMPONENTS (CHEMICAL NAME) CAS # OSHA PEL ACGIH TLV OTHER LIMITS PERCENTAGE RTECS #
1. MINERAL OIL USP 8042-47-5 90.0 -100.0 % PY8047000

SECTION 3. HAZARDS IDENTIFICATION

MINERAL OIL
EMERGENCY OVERVIEW

ROUTE(S) OF ENTRY: Inhalation? No , Skin? No , Eyes? No , Ingestion? Yes
POTENTIAL HEALTH EFFECTS (ACUTE AND CHRONIC)
Under Manufacturing Conditions: On rare occasions, prolonged and repeated exposure to oil mist poses a risk of pulmonary disease such as chronic lung inflammation. This condition is usually asymptomatic as a result of repeated small aspirations. Shortness of breath and cough are the most common symptoms. Aspiration may lead to chemical pneumonitis which is characterized by pulmonary edema and hemorrage, and may be fatal. Signs of lung involvement include increased respiration rate, increased heart rate, and a bluish discoloration of the skin. Coughing, choking, and gagging are often noted at the time of aspiration. Gastrointestinal discomfort may develop, followed by vomiting, with a further risk of aspiration.

CARCINOGENITICY: NTP? No , IARC Monographs? No , OSHA Regulated? No
CU
415
CARCINOGENICITY/OTHER INFORMATION

SIGNS AND SYMPTOMS OF EXPOSURE
May cause slight eye irritation
MEDICAL CONDITIONS GENERALLY AGGRAVATED BY EXPOSURE
none known

SECTION 4. FIRST AID MEASURES
MINERAL OIL
EMERGENCY AND FIRST AID PROCEDURES
IF INGESTED: Do NOT induce vomiting because of aspiration hazard. If victim is conscious,give 1 to 3 glasses of water or milk and contact physician or Poison Control Center. May act as laxative.
IF INHALED: Remove to fresh air. Administer respiration if indicated. If unconscious, seek medical attention.
IF IN EYES: Immediately flush with large amounts of water and continue flushing for 15 minutes. If material is hot, treat for thermal burns and take patient to hospital immediately.
IF ON SKIN: Remove contaminted clothing. If material is hot, submerge injured area in cold water. If patient is severely burned, remove to a hospital immediately.
NOTE TO PHYSICIAN

SECTION 5. FIRE FIGHTING MEASURES
MINERAL OIL
FLASH PT: 400.00 F METHOD USED: TCC
EXPLOSIVE LIMITS: LEL: NE UEL: NE
AUTOIGNITION PT: N.A. EXTINGUISHING MEDIA
dry chemical, foam, water spray, or carbon dioxide
FIRE FIGHTING INSTRUCTIONS
Water may be ineffective but can be used to cool containers exposed to heat or flame. Caution should be exercised when using water or foam as frothing may occur, expecially if sprayed into containers of hot, burning liquid. Water runoff can cause environmental damage. Dike and collect water used to fight fire.
FLAMMABLE PROPERTIES AND HAZARDS
Dense smoke may be generated while burning. Carbon monoxide, carbon dioxide and
CU
415

other oxides may be generated as products of combustion.
HAZARDOUS COMBUSTION PRODUCTS

CU
416

SECTION 6. ACCIDENTAL RELEASE MEASURES
MINERAL OIL
STEPS TO BE TAKEN IN CASE MATERIAL IS RELEASED OR SPILLED
Contain spill immediately. Do not allow spill to enter sewers or watercourses. Remove all sources of ignition. Absorb with appropriate inert material such as sand, clay, etc.. Large spills may be picked up using vacumn pumps, shovels, buckets, or other means and placed in drums or other suitable containers.

SECTION 7. HANDLING AND STORAGE
MINERAL OIL
HAZARD LABEL INFORMATION: Avoid exposure to excessive heat Keep container tightly closed
PRECAUTIONS TO BE TAKEN IN HANDLING
Do not transfer to unmarked containers. Store in closed containers away from heat, sparks, open flame, or oxidizing materials. Flammable and combustible liquids.
PRECAUTIONS TO BE TAKEN IN STORING

OTHER PRECAUTIONS
KEEP OUT OF REACH OF CHILDREN

SECTION 8. EXPOSURE CONTROLS/PERSONAL PROTECTION
MINERAL OIL
RESPIRATORY EQUIPMENT (SPECIFY TYPE)
none under normal use, NIOSH cert. OVR w/dust & mist filter
EYE PROTECTION
Chemical goggles
PROTECTIVE GLOVES
Impervious gloves
OTHER PROTECTIVE CLOTHING
Clothes to prevent skin contact
ENGINEERING CONTROLS (VENTILATION ETC.)
Local Exhaust: sufficient

CU
416

Special:
Mechanical (Gen):
Other:
WORK/HYGIENIC/MAINTENANCE PRACTICES
Wash hands before eating, smoking or using restroom.

SECTION 9. PHYSICAL AND CHEMICAL PROPERTIES
MINERAL OIL

PHYSICAL STATES: [ ] Gas , [X] Liquid , [ ] Solid
BOILING POINT: 740.00 F
MELTING POINT: N.A.
SPECIFIC GRAVITY (WATER = 1): 0.855 at 77.0 F
VAPOR PRESSURE (VS. AIR OR MM HG):
VAPOR DENSITY (VS. AIR = 1): > AIR
EVAPORATION RATE (VS BUTYL ACETATE=1):
SOLUBILITY IN WATER:
OTHER SOLUBILITY NOTES: Negligible
PERCENT VOLATILE: N.A.
PH:

APPEARANCE AND ODOR
Clear,light colored liquid

SECTION 10. STABILITY AND REACTIVITY
MINERAL OIL
STABILITY: Unstable [ ] Stable [X]
CONDITIONS TO AVOID - INSTABILITY
none known
INCOMPATIBILITY - MATERIALS TO AVOID
strong oxidizing agents
HAZARDOUS DECOMPOSITION OR BYPRODUCTS
In fire conditions, CO, CO2, and reactive hydrocarbons may be produced.
HAZARDOUS POLYMERIZATION: Will occur [ ] Will not occur [X]
CONDITIONS TO AVOID - HAZARDOUS POLYMERIZATION
will not occur

SECTION 11. TOXICOLOGICAL INFORMATION
MINERAL OIL

SECTION 12. ECOLOGICAL INFORMATION
MINERAL OIL

SECTION 13. DISPOSAL CONSIDERATIONS
MINERAL OIL
WASTE DISPOSAL METHOD
Dispose of in accordance with local, State and Federal regulations.

SECTION 14. TRANSPORT INFORMATION
MINERAL OIL
DOT PROPER SHIPPING NAME

DOT HAZARD LABEL: None
UN/NA NUMBER:
ADDITIONAL TRANSPORT INFORMATION

SECTION 15. REGULATORY INFORMATION
MINERAL OIL

SECTION 16. OTHER INFORMATION
MINERAL OIL

NFPA HAZARD RATINGS:
Health:0

Flammability:1

Waste Disposal Method: DO NOT ATTEMPT TO DISPOSE OF RESIDUAL GAS IN CYLINDERS. RETURN CYLINDERS TO AIR PRODUCTS FOR DISPOSAL. FLAMMABLE GAS. UN
1001.
Precautions-Handling/Storing: USE ONLY IN WELL VENTILATED AREAS. HANDLE
CYLINDERS W/CARE. USE A PRESSURE REDUCING REGULATOR SET AT LESS THAN 15
PSIG. NEVER EXPOSE TO HEAT.
Other Precautions: ALWAYS KEEP CYLINDERS UPRIGHT & SECURE CYLINDERS WHEN
IN USE. ALWAYS OPEN & CLOSE ACETYLENE VALVES SLOWLY. RETURN CYLINDERS W/
POSITIVE PRESSURE & CYLINDER VALVE CLOSED. AVOID DRAGGING/ROLLING/SLIDING
CYLINDERS, EVEN A SHORT DISTANCE. SUPP.
==========
Control Measures
==========
Respiratory Protection: OXYGEN DEFICIENT ATMOSPHERES ARE IN THE FLAMMABLE
RANGE. DON'T ENTER. AIR PURIFYING RESPIRATORS WILL NOT FUNCTION.
Ventilation: LOCAL EXHAUST/MECHANICAL (GENERAL): AS NECESSARY. MECHANICAL
MUST MEET NATL ELEC CODE REQUIREMENTS FOR CLASS 1, GROUP A
Protective Gloves: LEATHER, WELDERS
Eye Protection: SAFETY GLASSES, WELDER GOGGLES
Other Protective Equipment: LEATHER SLEEVES, LEATHER APRON & OTHER
STANDARD PROTECTIVE EQUIPMENT FOR CUTTING & WELDING.
Suppl. Safety & Health Data: USE A HAND TRUCK. STORAGE OF 2500 CUBIC FEET
OR LESS IS PERMISSIBLE WITHIN BLDGS. STORAGE IN EXCESS OF 2500 CUBIC FEET
MUST BE OUTDOORS OR IN WELL VENTILATED SPECIAL ROOMS OR BLDGS. DON'T STORE
IN HEAVY TRAFFIC AREAS. VALVE CAPS SHOULD REMAIN ON CYLIDNERS NOT CONNECTED
FOR USE. SEGREGATE FULL & EMPTY CYLINDERS.
==========
Transportation Data
==========
==========

Instability:0

Special Hazard:

Minimal:0
Slight:1
Moderate:2
Serious:3
Extreme:4

The information and data herein are believed to be accurate and have been compiled from sources believed to be reliable. It is offered for your consideration, investigation and verification.

Murphy® Oil Soap Spray

1. CHEMICAL PRODUCT AND COMPANY IDENTIFICATION

ACUTE HEALTH. . . .1
FIRE. 0
REACTIVITY. 0

HMIS HAZARD RATING				
Least=0	Slight=1	Moderate=2	High=3	Extreme= 4

PRODUCT NAME: Murphy® Oil Soap Spray
LABEL CODE: 01010 (22 oz), 01185 (32 oz)
CAS NUMBER: Not applicable - product is a mixture
GENERAL USE: A gentle, multi-purpose cleaner.

COLGATE-PALMOLIVE COMPANY
Institutional Products Division
191 East Hanover Avenue
Morristown, NJ 07960-3151

For consumer information: Call (800) 432-8226

EMERGENCY TELEPHONE NUMBER: For emergency involving spill, leak, fire, exposure or accident, call CHEMTREC: (800) 424-9300, day or night.

THE PITTSBURGH POISON CENTER HAS BEEN PROVIDED SPECIFIC INFORMATION FOR USE IN MEDICAL EMERGENCIES INVOLVING THIS PRODUCT: CALL COLLECT: (412) 692-5596.

2. COMPOSITION/INFORMATION ON INGREDIENTS

OSHA REGULATED COMPONENTS (present at a concentration > or = 1%):

Component	CAS #	%	PEL	TLV
None - not applicable				

The following components, present at a concentration > or = 0.1%, are listed as carcinogens or potential carcinogens by either the National Toxicology Program (NTP), the International Agency for Research on Cancer (IARC) or OSHA:

Component	CAS #	%	PEL	TLV
None - not applicable				

3. HAZARDS IDENTIFICATION

POTENTIAL HEALTH EFFECTS:

EYE CONTACT: May cause eye irritation on direct contact, but no permanent eye injury is expected.
SKIN CONTACT: May cause mild skin irritation on prolonged or repeated contact.
INGESTION: May be harmful if swallowed in large quantities. Aspiration of swallowed liquid may cause pneumonitis.
INHALATION: No adverse effects expected.

4. FIRST AID MEASURES

EYE CONTACT: Flush eyes with large amounts of water for 15 minutes. Get medical attention if irritation persists.
SKIN CONTACT: Rinse area with plenty of water. Get medical attention if irritation occurs.
INGESTION: Drink 1-2 glasses of a clear liquid. Get medical attention.
INHALATION: Not applicable.

5. FIRE FIGHTING MEASURES

Flash Point (Method): Not established
Extinguishing Media: CO_2, Water Spray, All-purpose Dry Chemical
SPECIAL FIRE FIGHTING PROCEDURES: Self-contained breathing apparatus and protective clothing should be worn when fighting chemical fires.

6. ACCIDENTAL RELEASE MEASURES

Cover with inert, absorbent material and remove to disposal container. Spill area may be slippery. Flush with plenty of water.

7. HANDLING AND STORAGE:

Store in a tightly closed container in a cool, dry, well-ventilated area.

8. EXPOSURE CONTROLS/PERSONAL PROTECTION

GENERAL CONTROLS: Avoid eye contact.
PROTECTIVE CLOTHING: The use of safety goggles and protective gloves is recommended.
SPECIAL PRECAUTIONS: Keep out of the reach of children.

9. PHYSICAL AND CHEMICAL PROPERTIES

Appearance and odor: Light yellow liquid. Citrus odor.
pH: 10.0 ± 0.6

10. STABILITY AND REACTIVITY

GENERAL: This product is stable. Hazardous polymerization will not occur.
INCOMPATIBLE MATERIALS: Avoid strong oxidizing and reducing agents and easily ignitable materials. Avoid prolonged contact with the more reactive alloys (aluminum, brass, bronze, etc.).
HAZARDOUS DECOMPOSITION: None known.

11. TOXICOLOGICAL INFORMATION

This product has not been tested as a whole. However, this formula was reviewed by expert toxicologists in the Product Safety Assurance Department of Colgate-Palmolive and is determined to be safe for its intended use. This review has taken into consideration available safety-related information including information on individual ingredients, similar ingredients, similar formulas and potential ingredient interactions. This review is a component of the hazard determination used to prepare the statements in Section 3 of the MSDS.

12. ECOLOGICAL INFORMATION

Not Available.

13. DISPOSAL CONSIDERATIONS

Any disposal practice must be in compliance with local, state, and federal laws and regulations (contact local or state government agency for specific rules). Do not dump into sewers, any body of water, or onto the ground.

14. TRANSPORTATION

This product is not regulated as a DOT hazardous material.

15. REGULATORY INFORMATION

RCRA (40 CFR 261, Subpart D): Not Applicable.

CLEAN WATER ACT: Not Applicable.

CLEAN AIR ACT:
Contains ethanol which is a Section 111 material.

SARA:
Sections 301-304 (Threshold planning quantity – TPQ)
40 CFR 355: Not Applicable.

Section 313 (Toxic chemical release reporting)
40 CFR 372: The following chemicals must be reported under
SARA 313: Not Applicable.

CERCLA:
Section 102 (Reportable Quantity – RQ)
40 CFR 302: Not Applicable.

TSCA Section 8(b) INVENTORY STATUS:
All ingredients in this product are listed on the TSCA Inventory or are not required to be listed on the TSCA Inventory.

NEW JERSEY RIGHT TO KNOW HAZARDOUS SUBSTANCE LIST:
This product contains the following components subject to reporting requirements:
Ethanol

PENNSYLVANIA HAZARDOUS SUBSTANCE LIST:
This product contains the following components subject to reporting requirements: None

MASSACHUSETTS SUBSTANCE LIST:
This product contains the following components subject to reporting requirements:
Ethanol

CALIFORNIA SAFE DRINKING WATER AND TOXIC ENFORCEMENT ACT (PROPOSITION 65):
This product contains the following components subject to reporting requirements: None

CANADA:
Workplace Hazardous Materials Information System (WHMIS)-listed material.
This product contains the following components subject to reporting requirements: None

16. OTHER INFORMATION

Effective Date: January 31, 2002
Supersedes MSDS dated April 19, 2000
MSDS Status: Revised Sections 1, 3, 4, 5, 7, 8, 9, 10, 11, 13, 15

The information on this sheet is limited to the material identified and is believed by the Colgate-Palmolive Company to be correct based on its knowledge and information as of the date noted. Colgate-Palmolive makes no representation, guarantee or warranty, expressed or implied, as to the accuracy, reliability or completeness of the information and assumes no responsibility for injury, damage or loss resulting from the use of the material.

Material Safety Data Sheet

Section 1: CHEMICAL PRODUCT AND COMPANY IDENTIFICATION

Product Name/ Trade Name: Orange Glo Wood Cleaner & Polish

HMIS codes	H	F	R	P
	1	2	0	ND

Supplier: Orange Glo International
PO Box 3998
Littleton, CO 80110 USA

Manufacturer: Northern Labs
4701 Custer St
Manitowoc WI 54221

Emergency Phone: 303-740-1909
ChemTrec 800-424-9300

MSDS preparation date: 14 September 2001
By: L. Brown

Information Phone: 303-740-1909

MSDS Revision date: 14 September 2001
MSDS Reviewed: 14 September 2001

Section 2: COMPOSITION/INFORMATION ON INGREDIENTS

General Description: Non-aerosol liquid wood cleaner and polish. Bitrex has been added to prevent ingestion.

Hazardous Ingredients:

Ingredients not precisely identified are proprietary or nonhazardous

CAS #	Chemical name	%'age range
64742-47-8	Petroleum distillates, hydrotreated, light	50-100
8028-48-6	Cold pressed orange oil	<10%
--	--	--
--	--	--

Section 3: HAZARDS IDENTIFICATION

General:	Combustible. Repeated exposure may cause skin dryness or cracking
Emergency:	Ingestion - seek immediate medical attention
Primary Route(s) of Entry:	Skin contact, eye contact, inhalation, ingestion
Effects of Overexposure-Inhalation:	Respiratory tract irritation, headaches, dizzines, anesthesia, drowsiness, unconsciousness and other central nervous system effects.
Effects of Overexposure-Ingestion:	Minute amounts may be aspirated into lungs causing mild to severe pulmonary injury
Effects of Overexposure-Eyes:	Irritation
Effects of Overexposure-Skin:	May cause drying and cracking of skin
Effects of Overexposure-Chronic Hazards:	Skin contact may aggravate an existing dermatitis

Section 4: FIRST AID MEASURES

- Skin: Rinse well with warm water
- Eyes: Rinse opened eyes with copious amounts of water. If irritation persists, call a physician
- Ingestion: Do not induce vomiting. Call a physician immediately.

Material Safety Data Sheet

- Inhalation: Remove to fresh air. If breathing is irregular or has stopped, administer oxygen and call a physician immediately

Section 5: FIRE FIGHTING MEASURES

Flashpoint and method used:	170 deg F/76.4 deg C (TCC)	Flammable limit: (LEL)	1	Flammable limit: (UEL)	6

Auto-ignition temperature:	Product is not self igniting
Extinguishing media:	Foam, dry chemical carbon dioxide, ABC type fire extinguishers
Special fire-fighting protective equipment:	Self contained positive pressure breathing apparatus and protective clothing should be worn
Unusual fire and explosion hazards:	Keep product away from ingitin sources, such as heat, sparks, pilot lights, and open flames.
Explosion data:	ND

Section 6: ACCIDENTAL RELEASE MEASURES

Personal protective equipment:	In restricted areas, use approved chemical/mechanical filters designed to remove a combination of particles and vapor. In confined area, use approved air line type respirator or hood.
Material release or spill:	Shut off and eliminate all ignition sources. Keep people away. Recover free product. Add sand, earth or other suitable absorbent to spill area. Minimze breathing vapors. Minimize skin contact. Ventilate confined spaces. Open all windows and doors. Keep product out of sewers and watercourses by diking or impounding. Advise authorities if product has entered or may enter sewers, watercoures, or extensive land areas.
Other:	--

Section 7: HANDLING AND STORAGE

Storage:	Store in original container. Do not store above 120 deg F.
Precautions during handling and storage:	Ensure adequate ventilation during use. Avoid breathing vapors. Avoid skin and eye contact. Keep out the reach of children and domestic animals.

Section 8: EXPOSURE CONTROLS/PERSONAL PROTECTION

Exposure limits:	Petroleum distillate OSHA PEL: NE (300 ppm recommended by supplier); ACGIH TLV: NE Orange Oil: OSHA PEL: not estab; ACGIH TLV: not estab
Engineering controls:	To prevent fire or explosion risk from static accumulation and discharge, effectively bond and/or ground product transfer system.Keep containers closed when not in use. Do not store near heat, sparks, flame or strong oxidants.
Eye protection:	None under normal use. Use splash goggles or face shield when eye contact may occur

Material Safety Data Sheet

Protective clothing:	None under normal use. Chemical resistant apron or other impervious clothing if needed. Chemical resistant gloves if needed to avoid prolonged or repeated skin contact.
Respiratory protection:	Use supplied air respiratory protection in confined or enclosed spaces if needed. Use only with ventilation sufficient to prevent exceeding recommended exposure limit or buildup of explosive concentrations fo vapor in air. No smoking or use of flame or other ignition sources.
Other PPE:	--

Section 9: PHYSICAL AND CHEMICAL PROPERTIES

Appearance:	Slightly viscous clear orange liquid
Odor:	Orange
Physical state:	Liquid

Boiling point:	400 deg F/204 deg C		
Vapor Pressure:	ND	Vapor density:	<7.3 (est)
Solubility in water:	Insoluble	Evaporation rate:	< 0.01
pH:	NA	Viscosity:	4.25 cSt @ 40 deg C
Melting point:	NA	Specific Gravity:	8 lb/gal
% volatile by volume:	>90	Cloud point:	ND
Partition coefficient:	ND	Freezing point:	ND
Coefficient of water/oil distribution:	ND		

Section 10: STABILITY AND REACTIVITY

Stability:	Stable
Incompatibility:	Strong oxidizers
Conditions to avoid:	Application to hot surfaces, exposure to open flame
Hazardous decomposition:	Carbon monoxide, sulfur oxides, aldehydes, smoke
Hazardous polymerization:	None

Section 11: TOXICOLOGICAL PROPERTIES

Acute oral toxicity	LD50 >5 g/kg Rat
Carcinogenicity:	Not recognized as a carcinogen by ACHIG, IARC, NTP, OSHA
Reproductive toxicity/ Teratogenicity:	ND
Mutagenicity:	ND
Toxicologically synergistic products:	ND

Section 12: ECOLOGICAL INFORMATION

Persistence and degradation:	ND - product does not contain PCB's
Toxicity:	ND
Other:	Do not discharge into municipal sewers or waterways

Section 13: DISPOSAL CONSIDERATIONS

Disposal method:	Dispose of in accordance with local, state and federal regulations
Container disposal:	Dispose of in accordance with local, state and federal regulations

Material Safety Data Sheet

Section 14:	TRANSPORT INFORMATION

DOT proper shipping name:	Not hazardous	DOT technical name:	NA
DOT Hazard class:	NA	Hazard subclass:	NA
UN Number, proper shipping name:	NA	Packing group:	NA

Section 15:	REGULATORY INFORMATION

TSCA:	All ingredients are listed on the TSCA inventory
DSL:	ND
OSHA Haz Com 29 CFR 1910.1200:	MSDS prepared pursuant to the Hazard Communication Standard (29 CFR 1910.1200)
WHMIS Classification:	ND
CERCLA and SARA:	ND

Section 16:	OTHER INFORMATION

% Volatile Organic Compounds (VOCs)	<10%

Legend:	N.D. Not Determined	N.E. Not Established	N.A. Not Applicable

The information provided has been adapted from the manufacturer supplied MSDS.
The information above is believed to be accurate and represents the best information currently available to us. However, we make no warranty of merchantability or any other warranty, express or implied, with respect to such information, and we assume no liability resulting from use of MSDS information.

MSDS Addendum

Always follow label instructions and warnings. Typical use of product is a guideline only.

Typical Use of Product:	Used to clean and polish wood surfaces. NOT recommended for use on wood floors due to risk of slip accidents.

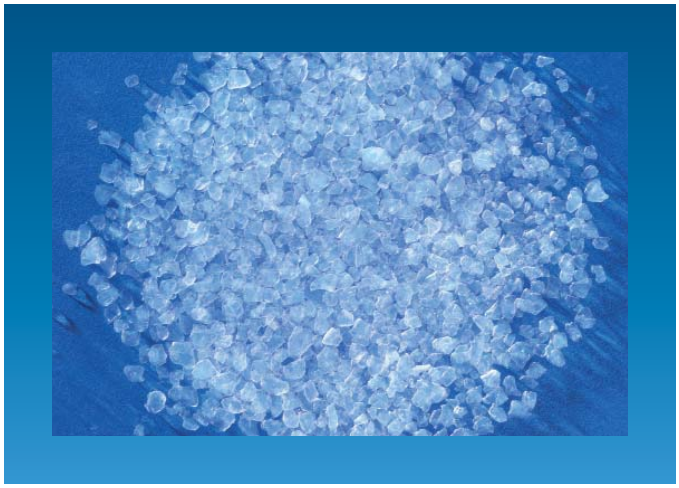

CABOT
creating what matters

nanogel™ TRANSLUCENT AEROGEL

Product Features

Particle Size Range:	≈ 0.5 to 4.0 mm (0.02 to 0.16 in)
Pore Diameter:	≈ 20 nm
Porosity:	> 90%
Bulk Density:	90 to 100 kg/m³ (5.6 – 6.2 lb/ft³)
Surface Chemistry:	Fully Hydrophobic
Thermal Conductivity:	0.018 W/m·K at 25°C (0.125 Btu·in/hr·ft²·°F)
Surface Area:	600 to 800 m²/g
CAS RN:	102262-30-6

Nanogel® Aerogel Flammability Testing

Flammability of solids – burning rate (fire train test)
(Chilworth Technologies)

Result: not readily combustible substance of Division 4.1 (DOT); No smoke

Standard Test Method for Ignition Properties of Plastics – Test Method: ASTM D-1929 (Vtech)

Flash Ignition Temp	Self Ignition Temp
395°C (750°F)	395°C (750°F)

Minimum Ignition Energy of Dust:
US Bureau of Mines Report of Investigations 5624

Temperature	Minimum Ignition Energy
RT	>500 mJ

Caloric Content (ASTM E1354-02):

3.37 MJ/kg	1451 Btu/lb

Smoke Density (E662): Ds=0.3

Nanogel® Translucent Aerogel Properties

Aerogel Thickness		Light Transmission	Solar Heat Gain Coefficient /g factor	U (Btu/hr·ft²·F)	K (W/m²·K)
0.5"	1.3 cm	73%	0.73	0.25	1.4
1"	2.5 cm	53%	0.52	0.125	0.7
1.25"	3.1 cm	45%	0.43	0.1	0.57
1.5"	3.8 cm	39%	0.39	0.083	0.47
2"	5 cm	28%	0.26	0.063	0.35
2.5"	6.4 cm	21%	0.21	0.05	0.28

nanogel™

The Benefits of Utilizing Nanogel® Translucent Aerogel

- Introduces the best insulation, diffuse light-transmitting technology on the globe.
- Doubles light transmission and thermal insulation over current technologies.
- Ability to meet stringent building codes for thermal insulation and light transmission without trade-offs.
- Improved insulation performance, reduced energy consumption and HVAC costs.
- Better system performance, leads to better daylighting designs, leads to better lives.

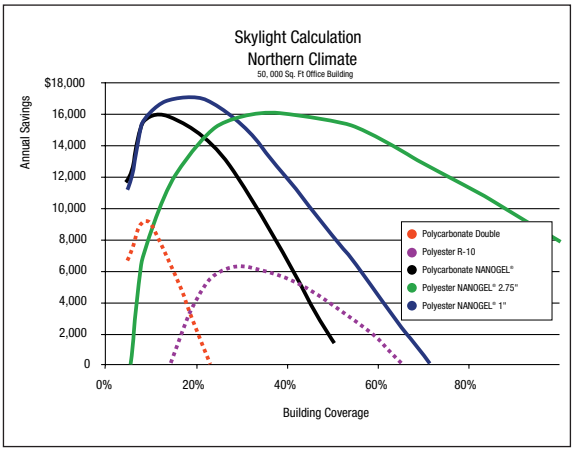

State-of-the-Art

Nanogel® Aerogel Technology
Direct Silation of the Hydrogel

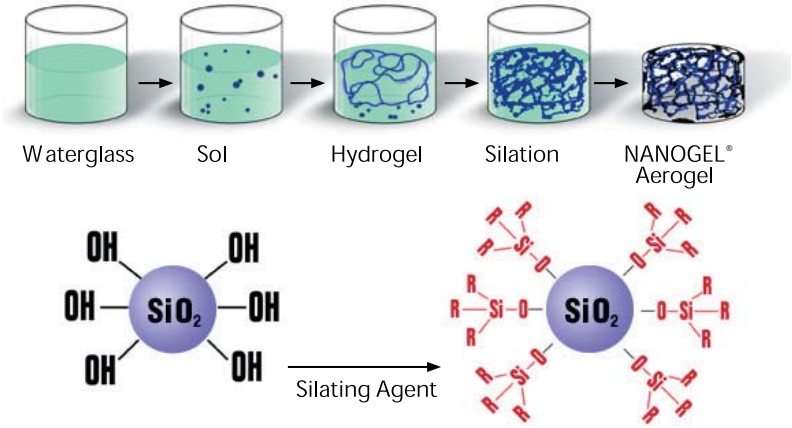

North America

Cabot Corporation
157 Concord Road
Billerica, MA 01821
U.S.A.
T: (978) 670·7077
F: (978) 670·7045

Europe

Cabot Rheinfelden
GmbH and Co. KG
Kronenstrasse 2
79618 Rheinfelden
Germany
T: (49) 7623·707·0
F: (49) 7623·707·53

Asia Pacific

Cabot Specialty Chemicals Inc.
Level 21, MNI Tower 2
11, Jalan Pinang
50450 Kuala Lumpur,
Malaysia
T: (60-3) 2164·8352
F: (60-3) 2162·0253

South America

Cabot Corporation Latin
American Division
Av. João, Castaldi, 88
04517-900, São Paulo, SP,
Brazil
T: (55-11) 5091·8300
F: (55-11) 5542·6037

Email: nanogel@cabot-corp.com

CABOT
creating what matters

 03/03

EAST PENN manufacturing co., inc. Deka

– Material Safety Data Sheet –

Lead Acid Battery Wet, Filled with Acid

SECTION I

Manufacturer's Name:
East Penn Manufacturing Co., Inc.
Deka Road, Lyon Station, PA 19536
Telephone Number for Information: (610) 682-6361
Emergency Telephone Number: CHEMTREC: 1-800-424-9300,
In Washington D.C. or outside continental U.S., call 1-202-483-7616

Date: March 15, 2002

Trade Name: Electric Storage battery, SLI or Industrial battery

Classification: Battery wet, filled with acid, electric stor
UN2794

SECTION II
HAZARDOUS INGREDIENTS/IDENTITY INFORMATION

Hazardous Components Specific Chemical Identity (Common Name (s))	OSHA PEL	ACGIH TLV	Range Percent By Weight	Average
Lead, CAS #7439921	0.05 mg/m^3	0.05 mg/m^3	43-70	65
Sulfuric Acid, CAS #7664939	1.00 mg/m^3	1.00 mg/m^3	20-44	25
Antimony, CAS #7440360	0.50 mg/m^3	0.50 mg/m^3	0-4	<1
Arsenic, CAS #7440382	0.01 mg/m^3	0.01 mg/m^3	<.01	-
Polypropylene, CAS #9003070	-	-	5-10	8
Calcium, CAS #7440702	1.0 mg/m^3	1.0 mg/m^3	<1	<1

SECTION III
PHYSICAL/CHEMICAL CHARACTERISTICS

Electrolyte (Sulfuric Acid):
Appearance and Odor: Clear, Odorless, Colorless
Boiling Point: approximately 235° F
Evaporation Rate (Butyl Acetate=1): less than 1.0
Melting Point: N/A

Solubility in Water: Completely
Specific Gravity (H_20=1): 1.220 – 1.325
Vapor Density (AIR=1): N/A
Vapor Pressure (mm Hg): 13

SECTION IV
FIRE AND EXPLOSION HAZARD DATA

Flash Point (Method Used): Non-Flammable
Extinguishing Media: Class ABC extinguisher, CO_2

Flammable Limits: *Hydrogen Gas
LEL: 4% **UEL** 74%

Special Fire Fighting Procedures: Cool exterior of battery if exposed to fire to prevent rupture. The acid mist and vapors in a fire situation are corrosive. Wear special respiratory protection (SCBA) and clothing.
Unusual Fire and Explosion Hazards: *Hydrogen gas, which may explode if ignited, is produced by this battery, especially when charging. Use adequate ventilation; avoid open flames, sparks, or other sources of ignition.

SECTION V
REACTIVITY DATA

Stability: Stable **Condition to Avoid:** Prolonged overcharging, sources of ignition

Incompatibility (Materials to Avoid): Sulfuric Acid: Contact with combustibles and organic materials may cause fire and explosion. Also reacts violently with strong reducing agents, metals, strong oxidizers and water. Contact with metals may produce toxic sulfur dioxide fumes and may release flammable hydrogen gas.

Hazardous Decomposition of By-Products: Sulfuric Acid: Excessive overcharging or fire may create Sulfur trioxide, carbon monoxide, sulfuric acid mist, sulfur dioxide, and hydrogen.
Lead Compounds: Contact with strong acid or base or presence of nascent hydrogen may generate highly toxic arsine gas.

SECTION VI
HEALTH HAZARD DATA

Route(s) of Entry: Not Applicable under normal use. (Inhalation, skin contact, and ingestion)

Health Hazards (Acute and Chronic): Do not open battery, avoid contact with internal components. Internal components are Oxide lead and electrolyte. Short term exposure: Sulfuric acid may cause irritation of eyes, nose, and throat. Prolonged contact may cause severe burns. Long term exposure: Repeated contact causes irritation and skin burns. Repeated exposure to mist may cause erosion of teeth, chronic eye irritation and/or chronic inflammation of the nose, throat, and bronchial tubes.
TARGET ORGAN: (Electrolyte) respiratory system, eyes, skin, and teeth

Carcinogenicity:
Sulfuric Acid: The International Agency for Research on Cancer (IARC) has classified "strong inorganic acid mist containing sulfuric acid" as a Category 1 carcinogen, a substance that is carcinogenic to humans. This classification does not apply to liquid forms of sulfuric acid contained within a battery. Inorganic acid mist (sulfuric acid mist) is not generated under normal use of this product. Misuse of the product such as overcharging, may result in the generation of sulfuric acid mist.
Lead Compounds: Lead is listed as a 2B carcinogen, likely in animals at extreme doses. Proof of carcinogenicity in humans is lacking at present.
Arsenic: Listed by National Toxicology Program (NTP), IARC, OSHA and NIOSH as a carcinogen only after prolonged exposure at high levels.

Signs and Symptoms of Exposure: Acid contact may cause irritation of eyes, nose and throat. Breathing of mist may produce respiratory difficulty. Contact with eyes and skin causes irritation and skin burns. Sulfuric acid is a CORROSIVE chemical.

Medical Conditions Generally Aggravated by Exposure: Sulfuric Acid Mist exposure may aggravate medical conditions such as, pulmonary edema, bronchitis, emphysema, dental erosion, and tracheobronchitis. Pregnant women and children must be protected from lead exposure.

Emergency and First Aid Procedures: (Sulfuric Acid)

1) Flush contacted area with large amounts of water for at least 15 minutes. Remove contaminated clothing and obtain medical attention if necessary. Eye wash and/or emergency shower should be readily available.
2) If swallowed, give large volumes of water. **DO NOT** induce vomiting, obtain medical treatment.

SECTION VII
PRECAUTIONS FOR SAFE HANDLING AND USE

Steps to be Taken in Case Material is Released or Spilled: *SULFURIC ACID*: Dilute spill cautiously with five to six volumes of water and gradually neutralize with sodium bicarbonate, soda ash or lime. When exposure level is not known, wear NIOSH approved positive pressure self-contained breathing apparatus. Reference North American Emergency Response Guidebook, #154.
Waste Disposal Method: Lead-acid batteries are completely recyclable. For information on returning batteries to East Penn for recycling, contact your East Penn Representative. Dispose of any collected material in accordance with local, state or applicable federal regulations.
Precautions to be Taken in Handling and Storing: Store away from reactive material as defined in Section V, Reactivity Data. Place cardboard between layers of stacked batteries to avoid damage and short circuit. Do not allow metallic materials to simultaneously contact both terminals.
Other Precautions: Sodium bicarbonate, soda ash, sand, or lime should be kept in same general area for emergency use. Keep away from sources of ignition during charging see Section IV on generation of hydrogen gas. If battery case is broken, avoid direct contact with internal components.

SECTION VIII
CONTROL MEASURES

Respiratory Protection (Specific Type): Respirator required when PEL is exceeded or employee witnesses respiratory irritation. (see Section VI, Health Hazard Data).
Ventilation: Must be provided when charging in an enclosed area. (29CFR1910.178(g) and .305(j)(7)
Mechanical (general): Acceptable at 1 to 4 air exchanges/hour or to maintain air concentrations below the PEL.
Local Exhaust: Preferred
Other: Local building/fire codes may require explosion proof fans and equipment
Protective Gloves: Acid resistant
Eye Protection: Preferred, safety glasses, goggles, face shield
Other Protective Clothing or Equipment: Acid resistant aprons, boots, and protective clothing
Work Hygienic Practices: Good Personal hygiene and work practices are mandatory.

SECTION IX
OTHER REGULATORY INFORMATION

NFPA Hazard Rating	Sulfuric Acid	Lead
Health(Blue)	3	3
Flammability (Red)	0	0
Reactivity (Yellow)	2	0

Note: Sulfuric acid is water-reactive if concentrated.

U.S. DOT: Battery Wet, Filled with Acid

Hazard Class/Division	8
ID Number	UN2794
Packing Group	III
Label Requirement	Corrosive

RCRA: Spent lead-acid batteries are not regulated as hazardous waste when recycled. Spilled sulfuric acid is a characteristic hazardous waste, EPA hazardous waste number D002 (corrosivity).

CERCLA (Superfund) and EPCRA (Emergency Planning and Community Right to Know ACT)

a) Reportable Quantity (RQ) for spilled 100% sulfuric acid is 1000 lbs.
b) Sulfuric acid is a listed "Extremely Hazardous Substance" under EPCRA with a Threshold Planning Quantity (TPQ) of 1000 lbs.
c) EPCRA Section 312 Tier II reporting required for batteries if sulfuric acid is present in quantities of 500 lbs or more and/or lead is present in quantities of 10,000 lbs or more.

California Prop 65: This product contains chemicals known to the State of California to cause cancer, birth defects and other reproductive harm.

For additional information concerning East Penn Manufacturing Co., Inc. products or questions concerning the content of this MSDS please contact your East Penn representative.

This information is accurate to the best of East Penn Mfg. Co.'s knowledge or obtained from sources believed by East Penn to be accurate. Before using any product, read all warnings and directions on the label.

g

GE Plastics

LEXAN
HF1110-111
Print Date: 09-22-2004
Page 1 of 7

Revision Date: 09/01/02

Material Safety Data Sheet

SECTION 1: PRODUCT AND COMPANY IDENTIFICATION

General Electric Co.
One Plastics Ave.
Pittsfield, MA 01201

GE Plastics Canada, Ltd.
2300 Meadowvale Blvd.
Mississauga, ONT L5N 5P2

Visit GE Plastics on the Web at WWW.GEPLASTICS.COM

PHONE NUMBERS

Emergency Medical (24 HOUR)	800/447-4545
Emergency Transportation/CHEMTREC (24 HOUR)	800/424-9300
Other Emergency Information (24 HOUR)	812/831-7001

Non-Emergency Information :

For Resin Products	413/448-5800
For Structured Products	413/448-5400

PRODUCT IDENTIFICATION

PRODUCT IDENTIFIER:	LEXAN HF1110-111 Poly (bisphenol-A-carbonate) [CASRN 111211-39-3]
PRODUCT DESCRIPTION:	Synthetic thermoplastic polymer.
PRODUCT USE:	Structural foam molding applications.

SECTION 2: COMPOSITION/INFORMATION ON INGREDIENTS

Components listed below are physical or health hazards as defined in the Hazard Communication Standard. The quantities represent typical or average values for the materials shown. Additional compositional data are provided in Section 15, REGULATORY INFORMATION, subject to supplier notification requirements.

Component Name	%	CAS Number	OSHA PEL	ACGIH TWA	GE Recommended Exp. Limits
This product does not contain any reportable hazardous materials.					

SECTION 3: HAZARDS IDENTIFICATION

EMERGENCY OVERVIEW:

- Pellets with slight or no odor.
- Spilled material may create slipping hazard.
- Can burn in a fire creating dense toxic smoke.
- Molten plastic can cause severe thermal burns.
- Fumes produced during melt processing may cause eye, skin, and respiratory tract irritation. Severe over-exposure may result in nausea, headache, chills, and fever.
- Secondary operations, such as grinding, sanding, or sawing can produce dust which may present an explosion or respiratory hazard.

HMIS Ratings: Health = 0; Flammability = 1; Reactivity = 0; PPE = B

POTENTIAL HEALTH EFFECTS

INGESTION:	No hazard in normal industrial use.
SKIN ABSORPTION:	No absorption hazard in normal industrial use.
EYE CONTACT:	Can cause mechanical irritation if dusts are generated.
SKIN CONTACT:	Unlikely to cause irritation even on repeated contact.

CHRONIC / CARCINOGENICITY

NTP:	Not Tested.
OSHA:	Not Regulated.
IARC:	Not Listed.

NOTE: OSHA, IARC and/or NTP have listed carbon black and heavy metals, present in some colorants, as carcinogens. If these colorants are present in this product, they are shown in SECTION 2. These colorants are essentially bound to the plastic matrix and are unlikely to contribute to workplace exposure under recommended processing conditions.

Processing fumes may cause irritation to the eyes, skin, and respiratory tract. In cases of severe exposure, nausea and headache can also occur.

Grease-like processing fume condensates on ventilation ductwork, molds, and other surfaces can cause irritation and injury to skin.

MEDICAL RESTRICTIONS: There are no known human health effects aggravated by exposure to this product. However, certain sensitive individuals and individuals with respiratory impairments may be affected by exposure to components in the processing vapors.

SECTION 4: FIRST AID MEASURES

EYES:	Immediately flush eyes with plenty of water. Get medical attention if irritation develops or persists. After initial flushing, remove any contact lenses.

SKIN:	Wash with soap and water. Get medical attention if irritation develops or persists. For hot product, immediately immerse in or flush affected area with large amounts of cold water to dissipate heat. Cover with clean cotton sheeting or gauze and get prompt medical attention.
INGESTION:	No hazard in normal industrial use. Do not induce vomiting. Seek medical attention if symptoms develop.
INHALATION:	No specific treatment is necessary since this material is not likely to be hazardous by inhalation.
PROCESSING FUMES:	Processing fumes inhalation may be irritating to the respiratory tract. If symptoms are experienced remove victim from the source of contamination or move victim to fresh air and obtain medical advice.

SECTION 5: FIRE FIGHTING MEASURES

FIRE FIGHTING:	Do not enter fire area without proper protection including self-contained breathing apparatus and full protective equipment. Fight fire from a safe distance and a protected location due to the potential of hazardous vapors and decomposition products.
EXTINGUISHING MEDIA:	Water spray and foam. Carbon dioxide and dry chemical are not recommended because their lack of cooling capacity may permit re-ignition.
CONDITIONS OF FLAMMABILITY:	Requires a continuous flame source to ignite.
AUTOIGNITION TEMPERATURE:	630 C (1166 F), estimated
EXPLOSION DATA:	Material not sensitive to mechanical impact but is sensitive to static discharge under dust cloud conditions.
HAZARDOUS COMBUSTION PRODUCTS:	Intense heat, smoke, carbon dioxide, carbon monoxide, hydrocarbon fragments

SECTION 6: ACCIDENTAL RELEASE MEASURES

GENERAL:	Gather and store in a closed container pending a waste disposal evaluation. Allow molten material to solidify before disposal.

SECTION 7: HANDLING AND STORAGE

HANDLING:	Follow recommendations on label and in processing guide. Prevent contact with skin and eyes. Use good industrial hygiene practices. Provide adequate ventilation. Secondary operations such as grinding, sanding, or sawing may produce a dust explosion hazard. Use aggressive housekeeping activities to prevent dust accumulation: employ bonding, grounding, venting, and explosion relief provisions in accordance with accepted engineering practices.
STORAGE:	Store in a cool dry place. Avoid excessive heat and ignition sources.

SECTION 8: EXPOSURE CONTROLS/PERSONAL PROTECTION

ENGINEERING CONTROLS: A continuous supply of fresh air to the workplace together with removal of processing fumes through exhaust systems is recommended. Processing fume condensate may be a fire hazard and toxic; remove periodically from exhaust hoods, ductwork, and other surfaces using appropriate personal protection. Local ventilation requirements must be determined to limit exposure to processing fumes in the workplace.

PERSONAL PROTECTION

EYE/FACE: Wear safety glasses with side shields or chemical goggles. In addition, use full-face shield when cleaning processing fume condensates from hoods, ducts, and other surfaces.

SKIN: When handling pellets or powder, avoid prolonged or repeated contact with skin. Wear long pants, long sleeves, well insulated gloves, and a face shield during melt processing. Appropriate clothing - including chemical resistant gloves - should be worn to prevent contact with processing fumes condensate.

RESPIRATORY: When using this product at elevated temperatures, implement engineering systems, administrative controls, or a respiratory protection program (including a respirator approved for protection from organic vapors, acid gases, and particulate matter) if processing fumes are not adequately controlled or operators experience symptoms of overexposure. If dust or powder are produced from secondary operations such as sawing or grinding, use a respirator approved for protection from dust.

SECTION 9: PHYSICAL AND CHEMICAL PROPERTIES

PHYSICAL STATE:	Solid
COLOR:	Plastic pellet with slight odor.
MELTING POINT:	This product does not exhibit a sharp melting point but softens gradually over a wide range of temperatures.
VAPOR PRESSURE (mmHg):	Negligible.
SPECIFIC GRAVITY (WATER = 1):	>1
WATER SOLUBILITY:	Insoluble
% VOLATILES:	Negligible
EVAPORATION RATE:	Negligible.
OCTANOL/WATER PARTITION COEFFCIENT:	Not established

SECTION 10: STABILITY AND REACTIVITY

STABILITY:	Stable
REACTIVITY:	Not reactive under recommended conditions of handling, storage, processing, and use.
CONDITIONS TO AVOID:	Do not exceed melt temperature recommendations in product literature. In order to avoid autoignition/hazardous decomposition of hot thick

	masses of plastic, purgings should be collected in small, flat, shapes or thin strands to allow for rapid cooling. Quench in water. Do not allow product to remain in barrel at elevated temperatures for extended periods of time: purge with a general purpose resin. (See Section 8 for respiratory protection advice.)
HAZARDOUS DECOMPOSITION PRODUCTS	Processing fumes evolved at recommended processing conditions may include trace levels of the following materials: phenols, alkylphenols, diarylcarbonate

SECTION 11: TOXICOLOGICAL INFORMATION

ACUTE HEALTH HAZARDS

ACUTE ORAL:	Oral LD50 Rat >=500 mg/kg Oral toxicity is estimated from tests on similar materials.
EYE CONTACT:	Product not considered primary eye irritant. When similar products, in finely divided form, were placed into the eyes of rabbits, slight transient redness or discharge occurred. This is consistent with the expected slightly abrasive nature of the resin particles.
SKIN CONTACT:	Product not considered primary skin irritant. Draize Skin Primary Irritation Score (rabbit) for similar products, in finely divided form, for a 24-hour exposure is 0. Not expected to be a skin sensitizer based on results of Modified Buehler Guinea Pig Sensitization Test from similar products.Dermal LD50 (rabbit) > 2g/kg, estimated.

SUBCHRONIC HEALTH HAZARDS

SUBCHRONIC TOXICITY:	No data available.

CHRONIC HEALTH HAZARDS

CARCINOGENIC PROPERTIES

NTP:	Not Tested.
OSHA:	Not Regulated.
IARC:	Not Listed.

SECTION 12: ECOLOGICAL INFORMATION

GENERAL:	This material is not expected to be harmful to the ecology.

SECTION 13: DISPOSAL INFORMATION

WASTE DISPOSAL:	Recycling is encouraged. Landfill or incinerate in accordance with federal, state and local requirements. Collected processing fume condensates and incinerator ash should be tested to determine waste classification.
POSSIBLE EPA WASTE CODES:	No data.

SECTION 14: TRANSPORTATION INFORMATION

REGULATORY STATUS: Not Regulated.

SECTION 15: REGULATORY INFORMATION

TOXIC SUBSTANCES CONTROL ACT (TSCA): This product is in compliance with all rules and orders of TSCA.

WHMIS PRODUCT CLASSIFICATION: Not a controlled product.

If any components in this product are SARA 313 listed as reportable, they are shown below. The quantities listed for elements represent typical or average values for compounds containing the element.

Component	CAS Number	%
No SARA 313-listed chemicals in this product.		

If any components in this product are known to the State of California to cause cancer and/or are reproductive hazards, they are listed below:

Component	Reason Listed	CAS Number	%
Not Applicable			

SECTION 16: OTHER INFORMATION

Prepared by: Product Stewardship

DISCLAIMER: This Material Safety Data Sheet [MSDS] information is provided based on the Hazard Communication Regulations for your region or country and for the use of the persons required to receive this information under those regulations. The information is neither designed nor recommended for any other use or for use by any other person, including for compliance with other laws. GE does not warrant the suitability for use of this MSDS for any other material or product not specifically identified herein. GE does not warrant the accuracy or authenticity of this MSDS unless it has been obtained directly from GE, or posted or viewed on a GE website. Modification of this MSDS, unless specifically authorized by GE, is strictly prohibited. This MSDS is based on information, that is believed to be reliable, but may be subject to change as new information becomes available. Because it is not possible to anticipate all conditions of use, additional safety precautions may be required. Since the use of this material is not under General Electric Company's control, each user is responsible for making its own determination as to the safe and proper handling of this material in its own particular use of this material. GENERAL ELECTRIC COMPANY MAKES NO REPRESENTATION OR WARRANTY, EITHER

EXPRESS OR IMPLIED, INCLUDING AS TO MERCHANTABILITY OR FITNESS FOR A PARTICULAR PURPOSE. Each user should read and understand this information and incorporate it into individual site safety programs as required by applicable hazard communication standards and regulations.

ABBREVIATIONS:
ACGIH: American Conference of Governmental Industrial Hygienists
CAS: Chemical Abstracts Service
CFR: Code of Federal Regulations
CPR: Cardiopulmonary Resuscitation
EPA: Environmental Protection Agency
HMIS: Hazardous Material Identification System (National Paint and Coatings Association)
IARC: International Agency for Research on Cancer
OSHA: Occupational Health and Safety Administration (U.S.)
NTP: National Toxicology Program
PEL: Permissible Exposure Limit
PPE: Personal Protective Equipment
SARA 313: Superfund Amendments and Reauthorization Act, Section 313
TLV: Threshold Limit Value
TSCA: Toxic Substance Control Act
WHMIS: Workplace Hazardous Materials Information System (Canada)

MATERIAL SAFETY DATA SHEET
Genetron® 245fa

DELAYED EFFECTS: None known.

Ingredients found on one of the OSHA designated carcinogen lists are listed below.

INGREDIENT NAME	NTP STATUS	IARC STATUS	OSHA LIST
No ingredients listed in this section			

4. FIRST AID MEASURES

SKIN: Promptly flush skin with water until all chemical is removed. Remove clothing contaminated with liquid and wash before reuse.

EYES: Immediately flush eyes with large amounts of water for at least 15 minutes, lifting eyelids occasionally to facilitate irrigation. Get medical attention.

INHALATION: Immediately remove patient to fresh air. If breathing has stopped, give artificial respiration. Use oxygen as required, provided a qualified operator is available. DO NOT give epinephrine (adrenaline). Get medical attention immediately.

INGESTION: Ingestion is an unlikely route of exposure because Genetron 245fa is a low boiling liquid, usually stored in a pressurized container. For that reason, ingestion hazards have not been evaluated. DO NOT induce vomiting unless instructed to do so by a physician. DO NOT give stimulants. Get medical attention immediately.

ADVICE TO PHYSICIAN: Because of possible disturbances of cardiac rhythm, catecholamine drugs such as epinephrine, should be used with special caution and only in situations of emergency life support. Treatment of overexposure should be directed at the control of symptoms and the clinical conditions.

5. FIRE FIGHTING MEASURES

FLAMMABLE PROPERTIES

FLASH POINT: None
FLASH POINT METHOD: ASTM D-3828-87 and ASTM D-1310-86
AUTOIGNITION TEMPERATURE: 774°F (412°C) Tested in a 500ml flask
UPPER FLAME LIMIT (volume % in air): None
LOWER FLAME LIMIT (volume % in air): None

FLAME PROPAGATION RATE (solids): Not applicable
OSHA FLAMMABILITY CLASS: Not applicable

EXTINGUISHING MEDIA:
Use any standard agent - choose the one most appropriate for type of surrounding fire (material itself in not flammable)

UNUSUAL FIRE AND EXPLOSION HAZARDS:
Genetron 245fa is not flammable at ambient temperatures and atmospheric pressure. However, based on other HFC response, this material will become combustible when mixed with air under pressure and exposed to strong ignition sources. Contact with certain finely divided reactive metals may result in formation of explosive or exothermic reactions under specific conditions (e.g. very high temperatures and/or appropriate pressures).

MATERIAL SAFETY DATA SHEET
Genetron® 245fa

SPECIAL FIRE FIGHTING PRECAUTIONS/INSTRUCTIONS:

Firefighters should wear self-contained, NIOSH-approved breathing apparatus for protection against suffocation and possible toxic decomposition products. Proper eye and skin protection should be provided. Use water spray to keep fire-exposed containers cool and to knock down vapors which may result from product decomposition.

6. ACCIDENTAL RELEASE MEASURES

IN CASE OF SPILL OR OTHER RELEASE: (Always wear recommended personal protective equipment.)

Immediately evacuate the area and provide maximum ventilation. Try to eliminate all ignition sources. Unprotected personnel should move upwind from spill. Only personnel equipped with proper respiratory and eye/skin protection should be permitted in the area until air has been tested and determined safe, including low lying areas.

Spills and releases may have to be reported to Federal and/or local authorities. See Section 15 regarding reporting requirements.

7. HANDLING AND STORAGE

NORMAL HANDLING: (Always wear recommended personal protective equipment.)

Avoid breathing vapors or liquid contact with eyes, skin or clothing. Do not puncture or drop containers, expose them to open flame, excessive heat, or direct sunlight. Use approved containers only. Tank cleaning personnel should use only formal tank entry procedure based on recognized safety principles.

Genetron 245fa should not be mixed with air above atmospheric pressure for leak testing or any other purpose. Use dry nitrogen to leak test equipment pressurized with Genetron 245fa.

STORAGE RECOMMENDATIONS:

Due to low boiling of 59.5°F (15°C), store in a cool, well-ventilated area of low fire risk. Protect container and its fittings from physical damage. Storage in subsurface locations should be avoided. Do not heat the container or store at a temperature above 125°F (51.7°C). Close valve tightly and after use and when empty. If container temperature exceeds boiling point, cool the container before opening.

8. EXPOSURE CONTROLS/PERSONAL PROTECTION

ENGINEERING CONTROLS:

Use local exhaust at filling zones and where leakage is probable. Use mechanical (general) ventilation for storage areas. All ventilation should be designed in accordance with OSHA standard (29 CFR 1910.94).

PERSONAL PROTECTIVE EQUIPMENT

SKIN PROTECTION:

Use protective, impervious gloves and clothing made of neoprene, nitrile or butyl rubber if prolonged or repeated contact with liquid is anticipated. Wash clothing promptly, if wet. Remove any non-impervious clothing and wash before re-use.

EYE PROTECTION:

For normal conditions, wear safety glasses. Where there is reasonable probability of liquid contact, wear splash-proof goggles. Contact lenses should not be worn under such conditions.

RESPIRATORY PROTECTION:

None required for normal work situations where adequate ventilation is provided. Use NIOSH approved self-contained, positive pressure respirators for emergencies and in situations where air may be displaced by vapors.

MATERIAL SAFETY DATA SHEET
Genetron® 245fa

ADDITIONAL RECOMMENDATIONS:

High dose-level warning signs are recommended for areas of principle exposure. Provide eyewash stations and quick drench shower facilities at convenient locations. For tank cleaning operations, see OSHA regulations, 29 CFR 1910.132 and 29 CFR 1910.133.

EXPOSURE GUIDELINES

INGREDIENT NAME	ACGIH TLV	OSHA PEL	OTHER LIMIT
1,1,1,3,3-Pentafluoropropane	None	None	**300 ppm TWA- 8hrs.

* = Provisional limit established by Honeywell
** = Workplace Environmental Exposure Level (AIHA).
*** = Biological Exposure Index (ACGIH).

OTHER EXPOSURE LIMITS FOR POTENTIAL DECOMPOSITION PRODUCTS:

Hydrogen Fluoride: 2 ppm ACGIH ceiling, 0.5 ppm TLV-TWA

9. PHYSICAL AND CHEMICAL PROPERTIES

APPEARANCE: Colorless liquid
PHYSICAL STATE: Liquid
MOLECULAR WEIGHT: 134
CHEMICAL FORMULA: $CHF_2CH_2CF_3$
ODOR: Faint ethereal and sweetish odor
SPECIFIC GRAVITY (water = 1.0): 1.32 @ 68°F (20°C)
SOLUBILITY IN WATER (weight %): 7.18g/l @ ambient room temperature
pH: Neutral
BOILING POINT: 59.5°F (15°C)
MELTING POINT: Not determined
FREEZING POINT: <-153°F (< -103°C)
VAPOR PRESSURE: 17.8 psia @ 68°F (20°C)
56.3 psia @ 130°F (54.4°C)
VAPOR DENSITY (air = 1.0): 4.6
EVAPORATION RATE: >1 **COMPARED TO:** Ether = 1
% VOLATILES: 100
FLASH POINT: None
(Flash point method and additional flammability data are found in Section 5.)

10. STABILITY AND REACTIVITY

NORMALLY STABLE? (CONDITIONS TO AVOID):

Product is stable under normal conditions.
Avoid sources of ignition such as sparks, hot spots, welding flames and lighted cigarettes which may yield toxic and/or corrosive decomposition products.

MATERIAL SAFETY DATA SHEET
Genetron® 245fa

INCOMPATIBILITIES:
Strong acids and alkalis, reactive metals e.g., powdered or freshly abraded aluminum (may cause strong exothermic reaction), sodium, potassium, calcium, magnesium, zinc, molten aluminum, barium and lithium shavings. Strong oxidizing agents.

HAZARDOUS DECOMPOSITION PRODUCTS:
Halogens and halogen acids; and possibly carbonyl halides.

HAZARDOUS POLYMERIZATION:
Will not occur.

11. TOXICOLOGICAL INFORMATION

IMMEDIATE (ACUTE) EFFECTS:
Acute Dermal (rabbit) – LD_{50} > 2,000 mg.kg
Cardiac Sensitization (dogs) – No effects noted at 35,000 ppm, the threshold for induction of cardiac arrhythmias in the presence of injected adrenalin was 44,000 ppm.
Acute Inhalation (rat): 4-hr. LC_{50} > 200,000 ppm. No lethality at 200,000 ppm. Evidence of transient anesthetic effect.
Acute Inhalation (mouse): 4-hr. LC_{50} > 100,000 ppm. No lethality at 100,000 ppm. Evidence of transient underactivity during exposure.

DELAYED (SUBCHRONIC AND CHRONIC) EFFECTS:
Embryotoxicity (rats): Not a teratogen at 50,000 ppm, the highest level tested.
NOEL (pups): 50,000 ppm
NOEL (dams): 2,000 ppm (due to decrease in bodyweight gains at 10,000 ppm and 50,000 ppm)
2 Generation Inhalation Toxicity (rats): Exposures 6 hrs/day, 7 days/wk at 0(control), 2,000, 10,000 and 50,000ppm. Toxicity seen in dams at 10,000 and 50,000ppm and in pups at 50,000ppm. Primary effect was increased mortality late in the lactation phase of the study.

28-day Inhalation Study (rats): NOAEL – 50,000 ppm and NOEL – 500 ppm
90-day Inhalation Study (rats): NOAEL – 2,000 ppm
Dose levels: 0, 500, 2,000, 10,000 and 50,000 ppm

Overall, subchronic studies showed dose-related increases in urinary fluoride levels, urine volumes and water consumption. Increases were noted in hematological parameters, BUN levels and serum liver enzyme activities (GOT, GPT). These increases did not follow a dose response; however, they indicate that HFC-245fa is metabolized in the liver. Significant recovery was noted in these parameters following a 2-week, non-exposure period which followed the 28-day exposure period. No histopathological effects were noted in the 28-day study. The 90-day study noted an increase in incidence and severity (trace to moderate) of mycarditis (inflammation of the heart muscle) at 10,000 and 50,000 ppm. This was not noted at the 500 or 2,000 ppm dose levels nor was it seen the the 28-day study at 50,000 ppm.

OTHER DATA:
Genetic studies: In vitro Human Lymphocyte weak positive activation without S9 at 30% v/v; not active with S9 up to 70% v/v.
In Vivo Mouse Micronucleaus – Not active up to 100,000 ppm.
Ames Test: Not active up to 100% v/v with or without S9.

12. ECOLOGICAL INFORMATION

Partition Coefficient: Log P_{OW} = 1.35 @ 21.5°C
Acute toxicity to Daphnia magna (Limit Test): NOEC > 97.9 mg/L; 48 hr. EC_{50} > 97.9 mg/L

MATERIAL SAFETY DATA SHEET
Genetron® 245fa

Acute toxicity to Rainbow Trout (Limit Test): NOEC > 10 mg/L; 96 hr. EC_{50} > 81.8 mg/L

13. DISPOSAL CONSIDERATIONS

RCRA

Is the unused product a RCRA hazardous waste if discarded? The product is not a RCRA waste
If yes, the RCRA ID number is: Not applicable

OTHER DISPOSAL CONSIDERATIONS:
All spent material must be disposed of in accordance with all applicable Federal and State RCRA Regulations. Consult with appropriate regulatory agencies before disposing of waste material.

The information offered here is for the product as shipped. Use and/or alterations to the product such as mixing with other materials may significantly change the characteristics of the material and alter the RCRA classification and the proper disposal method.

14. TRANSPORT INFORMATION

US DOT HAZARD CLASS: Not regulated

US DOT ID NUMBER: Not applicable

For additional information on shipping regulations affecting this material, contact the information number found in Section 1.

15. REGULATORY INFORMATION

TOXIC SUBSTANCES CONTROL ACT (TSCA)

TSCA INVENTORY STATUS: Listed

OTHER TSCA ISSUES: None

SARA TITLE III/CERCLA

"Reportable Quantities" (RQs) and/or "Threshold Planning Quantities" (TPQs) exist for the following ingredients.

INGREDIENT NAME	SARA/CERCLA RQ (lb)	SARA EHS TPQ (lb)
No ingredients listed in this section		

Spills or releases resulting in the loss of any ingredient at or above its RQ requires immediate notification to the National Response Center [(800) 424-8802] and to your Local Emergency Planning Committee.

SECTION 311 HAZARD CLASS: IMMEDIATE
PRESSURE

SARA 313 TOXIC CHEMICALS:
The following ingredients are SARA 313 "Toxic Chemicals". CAS numbers and weight percents are found in Section 2.

INGREDIENT NAME	COMMENT

MATERIAL SAFETY DATA SHEET

Genetron® 245fa

No ingredients listed in this section

STATE RIGHT-TO-KNOW

In addition to the ingredients found in Section 2, the following are listed for state right-to-know purposes.

INGREDIENT NAME	WEIGHT %	COMMENT
No ingredients listed in this section		

ADDITIONAL REGULATORY INFORMATION:

Contains HFC-245fa, a greenhouse gas, a substance which may contribute to global warming.
Regulated under Section 612 (SNAP) of the Clean Air Act and 40 CFR Part 82, subpart G.

WHMIS CLASSIFICATION (CANADA):

This product has been evaluated in accordance with the hazard criteria of the CPR and the MSDS contains all the information required by the CPR.

FOREIGN INVENTORY STATUS:

Europe: ELINCS #419 170 6
Japan: MOL 2-(13)-143
Canada: Notified
Australia: Notified

16. OTHER INFORMATION

CURRENT ISSUE DATE: December, 2005
PREVIOUS ISSUE DATE: January 2004

CHANGES TO MSDS FROM PREVIOUS ISSUE DATE ARE DUE TO THE FOLLOWING:

Section 1: Updated medical emergency number
Section 8: Updated ACGIH-TLV for HF decomposition product
Section 11: Additional toxicology information

OTHER INFORMATION: HMIS Classification: Health – 2, Flammability - 0, Reactivity - 1
NFPA Classification: Health - 2, Flammability - 0, Reactivity - 1

SAFETY DATA SHEET according to EC directive 2001/58/EC

DuPont™ SUVA® 410A Refrigerant

Version 2.2
Revision Date 12.04.2006 Ref. 130000000570

This SDS adheres to the standards and regulatory requirements of Great Britain and may not meet the regulatory requirements in other countries.

1. IDENTIFICATION OF THE SUBSTANCE/PREPARATION AND OF THE COMPANY/UNDERTAKING

Product information

Product name	:	DuPont™ SUVA® 410A Refrigerant
Types	:	ASHRAE Refrigerant number designation: R-410A
Use of the Substance/Preparation	:	refrigerant
Company	:	Du Pont de Nemours (Nederland) B.V. Baanhoekweg 22 NL-3313 LA Dordrecht The Netherlands
Telephone	:	+31-78-630.1011
Telefax	:	+31-78-630.1181
Emergency telephone number	:	+44-(0)8456-006.640

2. COMPOSITION/INFORMATION ON INGREDIENTS

Chemical Name	CAS-No.	EC-No.	Classification	Concentration [%]
Pentafluoroethane (R125)	354-33-6	206-557-8		50
Difluoromethane (R32)	75-10-5	200-839-4	F+; R12	50

For the full text of the R phrases mentioned in this Section, see Section 16.

3. HAZARDS IDENTIFICATION

Rapid evaporation of the liquid may cause frostbite.
Vapours are heavier than air and can cause suffocation by reducing oxygen available for breathing.

4. FIRST AID MEASURES

General advice	:	If unconscious place in recovery position and seek medical advice. Never give anything by mouth to an unconscious person. If breathing is irregular or stopped, administer artificial respiration. If symptoms persist, call a physician.
Inhalation	:	Move to fresh air. Keep patient warm and at rest. Artificial respiration and/or oxygen may be necessary.
Skin contact	:	Wash off with warm water. Take off all contaminated clothing immediately.
Eye contact	:	Rinse thoroughly with plenty of water, also under the eyelids. Consult a physician.

Notes to physician

Treatment	:	Do not give adrenaline or similar drugs.

5. FIRE-FIGHTING MEASURES

Specific hazards during fire fighting	:	pressure build-up
Special protective equipment for fire-fighters	:	In the event of fire, wear self-contained breathing apparatus.
Further information	:	Use extinguishing measures that are appropriate to local circumstances and the surrounding environment. Cool containers / tanks with water spray.

6. ACCIDENTAL RELEASE MEASURES

Personal precautions	:	Evacuate personnel to safe areas. Ventilate the area. Refer to protective measures listed in sections 7 and 8.
Environmental precautions	:	Should not be released into the environment.
Methods for cleaning up	:	Evaporates.

7. HANDLING AND STORAGE

Handling

Advice on safe handling	:	Provide sufficient air exchange and/or exhaust in work rooms. For personal protection see section 8.
Advice on protection against fire and explosion	:	No special protective measures against fire required.

Storage

Requirements for storage areas and containers	:	Keep container tightly closed in a dry and well-ventilated place. Store in original container.
Advice on common storage	:	No materials to be especially mentioned.
German storage class	:	2A : Compressed, liquefied or pressurised gas

8. EXPOSURE CONTROLS / PERSONAL PROTECTION

Engineering measures

Ensure adequate ventilation, especially in confined areas.

Personal protective equipment

Respiratory protection	:	For rescue and maintenance work in storage tanks use self-contained breathing

apparatus. Vapours are heavier than air and can cause suffocation by reducing oxygen available for breathing.

Hand protection	:	heat insulating gloves
Eye protection	:	safety glasses
Hygiene measures	:	Handle in accordance with good industrial hygiene and safety practice.

9. PHYSICAL AND CHEMICAL PROPERTIES

Form	:	Liquefied gas,
Colour	:	colourless,
Odour	:	ether-like,
pH	:	neutral
Boiling point/range	:	-51,6 °C at 1 013 hPa
Flash point	:	does not flash
Lower explosion limit	:	, not applicable
Vapour pressure	:	16 530 hPa at 25 °C
Vapour pressure	:	30 520 hPa at 50 °C
Density	:	1,062 g/cm3 at 25 °C, (as liquid)
Density	:	0,0066 g/cm3 at ca. 26 °C (1 013 hPa)

10. STABILITY AND REACTIVITY

Conditions to avoid	:	The product is not flammable in air under ambient conditions of temperature and pressure. When pressurised with air or oxygen the mixture may become flammable. Certain mixtures of HCFCs or HFCs with chlorine may become flammable or reactive under certain conditions.
Materials to avoid	:	alkali metals, alkaline earth metals, powdered metals, powdered metal salts
Hazardous decomposition products	:	hydrogen halides, carbon dioxide (CO2), Carbon monoxide, fluorocarbons, carbonyl halides

11. TOXICOLOGICAL INFORMATION

Acute inhalation toxicity

• Pentafluoroethane (R125)	:	ALC/ 4 h/ rat : > 3 480 mg/l
• Difluoromethane (R32)	:	LC50/ 4 h/ rat : 2 158 mg/l

Carcinogenicity assessment	:	Did not show carcinogenic effects in animal experiments.
Toxicity to reproduction assessment	:	Did not show mutagenic or teratogenic effects in animal experiments.
Human experience	:	Excessive exposures may affect human health, as follows: Inhalation severe shortness of breath, narcosis, Irregular cardiac activity
Further information	:	Rapid evaporation of the liquid may cause frostbite.

12. ECOLOGICAL INFORMATION

Global warming potential (GWP)	:	1 890

13. DISPOSAL CONSIDERATIONS

Product	:	Can be used after re-conditioning.
Contaminated packaging	:	Empty pressure vessels should be returned to the supplier.

14. TRANSPORT INFORMATION

ADR

Class:	2
Classification Code:	2A
HI No::	20
UN-No:	1078
Labelling No.:	2.2
Proper shipping name:	Refrigerant gas, n.o.s. (Pentafluoroethane, Difluoromethane)

IATA_C

Class:	2.2
UN-No:	1078
Labelling No.:	2.2
Proper shipping name:	Refrigerant gas, n.o.s. (Pentafluoroethane, Difluoromethane)

IMDG

Class:	2.2
UN-No:	1078
Labelling No.:	2.2
Proper shipping name:	Refrigerant gas, n.o.s. (Pentafluoroethane, Difluoromethane)

15. REGULATORY INFORMATION

Labelling according to EC Directives

The product does not need to be labelled in accordance with EC directives or respective national laws.

National legislation

Water contaminating class (Germany)	:	WGK 1 slightly water endangering WGK (DE) Update: VwVwS, A4

16. OTHER INFORMATION

Text of R phrases mentioned in Section 2

R12	Extremely flammable.

Further information

Before use read DuPont's safety information., For further information contact the local DuPont office or DuPont's nominated distributors., ® DuPont's registered trademark

The information provided in this Safety Data Sheet is correct to the best of our knowledge, information and belief at the date of its publication. The information given is designed only as a guidance for safe handling, use, processing, storage, transportation, disposal and release and is not to be considered a warranty or quality specification. The information relates only to the specific material designated and may not be valid for such material used in combination with any other materials or in any process, unless specified in the text.

AIR PRODUCTS & CHEMICALS -- ACETYLENE, ETHYNE, ETHINE
MATERIAL SAFETY DATA SHEET

NSN: 683000F002382
Manufacturer's CAGE: 00742
Part No. Indicator: A
Part Number/Trade Name: ACETYLENE, ETHYNE, ETHINE
==========
General Information
==========
Company's Name: AIR PRODUCTS AND CHEMICALS INC
Company's Street: 7201 HAMILTON BLVD
Company's City: ALLENTOWN
Company's State: PA
Company's Country: US
Company's Zip Code: 18195-1501
Company's Emerg Ph #: 215-481-4911
Company's Info Ph #: 215-481-4911 OR FAX 215-481-5900
Record No. For Safety Entry: 001
Tot Safety Entries This Stk#: 001
Status: SE
Date MSDS Prepared: 01JUN90
Safety Data Review Date: 11AUG93
Preparer's Company: AIR PRODUCTS AND CHEMICALS INC
Preparer's St Or P. O. Box: 7201 HAMILTON BLVD
Preparer's City: ALLENTOWN
Preparer's State: PA
Preparer's Zip Code: 18195-1501
MSDS Serial Number: BBKVV
==========
Ingredients/Identity Information
==========
Proprietary: NO
Ingredient: ACETYLENE
Ingredient Sequence Number: 01
NIOSH (RTECS) Number: AO9600000
CAS Number: 74-86-2
OSHA PEL: 2500 PPM
ACGIH TLV: SIMPLE ASPHYXIANT
==========
Physical/Chemical Characteristics

==========
Appearance And Odor: PURE ACETYLENE IS COLORLESS/ODORLESS.
Boiling Point: -119F/-84C
Melting Point: -113F/-81C
Vapor Pressure (MM Hg/70 F): 590 PSIA
Vapor Density (Air=1): 0.0681
Specific Gravity: 0.906
==========
Fire and Explosion Hazard Data
==========
Flash Point: 0F/-18C
Flash Point Method: CC
Lower Explosive Limit: 2.5%
Upper Explosive Limit: 100%
Extinguishing Media: CO2, DRY CHEMICAL, HALON
Special Fire Fighting Proc: STOP GLAS FLOW & FIGHT FIRE CONVENTIONALLY. USE WATER SPRAY TO KEEP CYLINDERS & OTHER CONTAINERS COOL IF EXPOSED TO
FIRE. KEEP PERSONNEL AWAY.
Unusual Fire And Expl Hazrds: FLAMMABLE/EXPLOSIVE. MAY DECOMPOSE VIOLENTLY
IN ITS FREE STATE UNDER PRESSURE >15 PSIG. BURNS W/HOT FLAME. IGNITES
EASILY DUE TO LOW MINIMUM IGNITION ENERGY.
==========
Reactivity Data
==========
Stability: NO
Cond To Avoid (Stability): AVOID MECHANICAL SHOCKS TO CONTAINER OF ACETYLENE. NEVER EXPOSE CYLINDER OR ACETYLENE SYSTEMS TO SOURCES OF HEAT.
Materials To Avoid: OXYGEN & HALOGENS. COPPER/BRASS/COPPER SALTS/MERCURY/
MERCURY SALTS/POTASSIUM/SILVER/SILVER SALTS & NITRIC ACID.
Hazardous Decomp Products: ACETYLENE WILL DECOMPOSE INTO ELEMENTAL CARBON
& HYDROGEN.
Hazardous Poly Occur: NO
==========
Health Hazard Data

==========
Route Of Entry - Inhalation: YES
Route Of Entry - Skin: NO
Route Of Entry - Ingestion: NO
Health Haz Acute And Chronic: ACETYLENE IS A SIMPLE ASPHYXIANT, IRRITANT &
ANESTHETIC. ABOUT 100 MG PER LITER MAY BE TOLERATED FOR 0.5-1.0 HOUR. THERE
IS NO EXPERIMENTAL EVIDENCE OF CHRONIC HARMFUL EFFECTS.
Carcinogenicity - NTP: NO
Carcinogenicity - IARC: NO
Carcinogenicity - OSHA: NO
Explanation Carcinogenicity: NONE
Signs/Symptoms Of Overexp: HEADACHES, DIZZINESS, SHORTNESS OF BREATH &
LOSS OF CONSCIOUSNESS MAY OCCUR IF THE GAS IS PRESENT IN QUANTITIES
SUFFICIENT TO DILUTE THE OXYGEN CONCENTRATION IN AIR. SYMPTOMS OF ANOXIA
OCCUR ONLY WHEN THE GAS CONCENTRATIONS ARE WITHIN THE FLAMMABLE RANGE & THE
MIXTURE HAS NOT IGNITED.
Emergency/First Aid Proc: FIRST DEGREE & MINOR SECOND DEGREE THERMAL BURNS
FROM FIRES SHOULD BE IMMERSED IN COOL WATER FOR 30 MINUTES. MAJOR SECOND &
THIRD DEGREE BURNS SHOULD BE COVERED IN THE CLEANEST MATERIAL AVAILABLE.
PERSONS SUFFERING FROM LACK OF OXYGEN SHOULD BE MOVED TO AREAS W/NORMAL
ATMOSPHERE. ASSISTED RESPIRATION & SUPPLEMENTAL OXYGEN SHOULD BE GIVEN IF
THE VICTIM IS NOT BREATHING. OBTAIN MED ATTN IN ALL CASES
==========
Precautions for Safe Handling and Use
==========
Steps If Matl Released/Spill: VENTILATE AREA TO PREVENT FLAMMABLE MIXTURE
FROM FORMING. REMOVE SOURCES OF IGNITION. AVOID ENTERING AREA OF FLAMMABLE
ATMOSPHERE. CAREFULLY REMOVE CYLINDERS W/SLOW LEAKS TO A REMOTE, OUTDOOR
LOCATION.

==========
Disposal Data
==========
==========
Disposal Data Review Date: 88270
Rec # For This Disp Entry: 01
Tot Disp Entries Per NSN: 001
Landfill Ban Item: YES
Disposal Supplemental Data: BOX 538/ALLENTOWN, PA 18105. IN CASE OF ACCIDENTAL EXPOSURE OR DISCHARGE, CONSULT HEALTH AND SAFETY FILE FOR
PRECAUTIONS.
1st EPA Haz Wst Code New: D001
1st EPA Haz Wst Name New: IGNITIBLE
1st EPA Haz Wst Char New: IGNITABILITY
1st EPA Acute Hazard New: NO
==========
==========
Label Data
==========
==========
Label Required: YES
Technical Review Date: 11AUG93
Label Date: 06AUG93
Label Status: F
Common Name: ACETYLENE, ETHYNE, ETHINE
Chronic Hazard: NO
Signal Word: DANGER!
Acute Health Hazard-Severe: X
Contact Hazard-Slight: X
Fire Hazard-Severe: X
Reactivity Hazard-Severe: X
Special Hazard Precautions: ACETYLENE IS A SIMPLE ASPHYXIANT, IRRITANT &
ANESTHETIC. ABOUT 100 MG PER LITER MAY BE TOLERATED FOR 0.5-1.0 HOUR. THERE
RESPIRATORY SYSTEM. DIGESTIVE TRACTS, LIVER.
Protect Eye: Y
Protect Skin: Y
Protect Respiratory: Y
Label Name: AIR PRODUCTS AND CHEMICALS INC
Label Street: 7201 HAMILTON BLVD
Label City: ALLENTOWN
Label State: PA
Label Zip Code: 18195-1501
Label Country: US

Label Emergency Number: 215-481-4911
Year Procured: UNK

MATERIAL SAFETY DATA SHEET

Section 1. Chemical product and company identification

Product Name:	ABC Dry Chemical Fire Extinguishant
Synonym:	Multi-purpose Dry Chemical
Manufacturer:	AMEREX CORPORATION
Internet Address:	www.amerex-fire.com
Address:	7595 Gadsden Highway P.O. Box 81 Trussville, AL 35173-0081
Telephone:	(205) 655-3271
Emergency Contacts:	Chemtrec 1(800) 424-9300 or (703) 527–3887
Revised:	August, 2003

Section 2. Hazard identification and emergency overview

Emergency overview: Light yellow, fine solid powder, odorless.

Adverse health effects and symptoms: Irritating to the respiratory system, eyes and skin. Symptoms may include coughing, shortness of breath, and irritation of the lungs, eyes, and skin. Ingestion, although unlikely, may cause cramps, nausea and diarrhea.

Exposure guidelines:

Ingredients	OSHA PEL	ACGIH TLV	DFG MAK *
Mono-ammonium phosphate	PNOC** Total dust, 15 mg/m^3 Respirable fraction, 5 mg/m^3	PNOC Total dust, 10 mg/m^3 Respirable fraction, 3 mg/m^3	PNOC Total dust, 4 mg/m^3 Respirable fraction, 1.5 mg/m^3
Ammonium sulphate	PNOC Total dust, 15 mg/m^3 Respirable fraction, 5 mg/m^3	PNOC Total dust, 10 mg/m^3 Respirable fraction, 3 mg/m^3	PNOC Total dust, 4 mg/m^3 Respirable fraction, 1.5 mg/m^3
Mica	6 mg/m^3	3 mg/m3	NR
Attapulgite clay	PNOC Total dust, 15 mg/m^3 Respirable fraction, 5 mg/m^3	PNOC Total dust, 10 mg/m^3 Respirable fraction, 3 mg/m^3	PNOC Total dust, 4 mg/m^3 Respirable fraction, 1.5 mg/m^3
Silicone oil	NR***	NR	NR

Calcium carbonate	PNOC Total dust, 15 mg/m^3 Respirable fraction, 5 mg/m^3	PNOC Total dust, 10 mg/m^3 Respirable fraction, 3 mg/m^3	-------
Amorphous silica	143 mg/m^3 80 mg/m^3 or % SiO_2	10 mg/m^3	4 mg/m^3
Yellow 14 pigment	NR	NR	NR

*German regulatory limits **PNOC = Particulates not otherwise classified (ACGIH) also known as Particulates not otherwise regulated (OSHA) *** NR = Not Regulated. All values are 8 hour time weighted average concentrations.

Hazard symbols: WHMIS (Canadian workplace hazardous materials identification system

D2B Product may irritate eyes, skin, or mucous membranes

Section 3. Composition/information on ingredients

Name/Compound	Weight %	CAS #
Mono-ammonium phosphate and Ammonium sulphate	94	7722-76-1 7783-20-2
Attapulgite clay or Fullers earth magnesium aluminum silicate- contains >1% crystalline silica (quartz)	<3	12174-11-7 14808-60-7
Mica potassium aluminum silicate	1-2	12001-26-2
Silicone oil methyl hydrogen polysiloxane	<1	63148-57-2
Calcium carbonate	<1	1317-65-3
Amorphous silica precipitated synthetic zeolite	<1	112926-00-8
Yellow 14 pigment – di-azo dye	<1	5468-75-7

Section 4. First Aid Measures

Eye Exposure: Irrigate eyes at eye wash station and repeat until pain free. Seek medical attention if irritation develops or persists, or if visual changes occur.

Skin Exposure: In case of contact, wash with plenty of soap and water. Seek medical attention if irritation develops or persists.

Inhalation: If respiratory irritation or distress occurs remove victim to fresh air. Seek medical attention if irritation develops or persists.

Ingestion: If victim is conscious and alert, give 2-3 glasses of water to drink and do not induce vomiting. Seek immediate medical attention. Do not leave victim unattended. To prevent aspiration of swallowed product, lay victim on side with head lower than waist. If vomiting occurs and the victim is conscious, give water to further dilute the chemical.

Medical conditions possibly aggravated by exposure: Inhalation of product may aggravate existing chronic respiratory problems such as asthma, emphysema, or bronchitis. Skin contact may aggravate existing skin disease. Chronic overexposure may cause pneumoconiosis ("dusty lung" disease).

Section 5. Fire fighting measures

Extinguishing media: non combustible and non flammable – product is an extinguishing agent.

Unusual fire/explosion hazards: in a fire this material may decompose, releasing oxides of sulfur and carbon (see Section 10).

Insensitive to mechanical impact or static discharge.

HMIS Hazard Ranking:
health = 1, flammability = 0, reactivity = 0, personal protective equipment: ½ mask APR w/HEPA cartridges (see Section 8).

Section 6. Accidental release measures

Clean up released material using vacuum or wet sweep and shovel to minimize generation of dust. Wear appropriate respiratory protection. Bag and drum for disposal. If product is used and/or contaminated, use PPE and containment appropriate to the nature of the mixture. Prevent material from entering waterways.

Section 7. Handling and storage

Avoid skin, eye, or respiratory exposure. Use appropriate PPE when handling or maintaining equipment, and wash thoroughly after handling (see Section 8). Keep product in original container or extinguisher. Contents may be under pressure – inspect for extinguisher rust periodically to insure container integrity. Do not mix with other extinguishing agents.

Section 8. Exposure controls/ personal protection

During the application of this product against fires, exhaust gases and the products of incomplete combustion (PICs) are the principal respiratory hazards. In the manufacture of extinguishers, automated systems and point source ventilation controls sufficiently minimize respiratory exposure. Employers and employees must use their collective judgment in determining occupational settings where the use of a dust mask or air purifying respirator is prudent. The need for respiratory protection is not likely for short-term use in well ventilated areas.

Respiratory protection: use N95 dust mask or air-purifying respirator (APR) with high efficiency particulate air (HEPA) filters.

Eye protection: wear chemical goggles.

Skin protection: use nitrile, latex, or similar gloves and coveralls. Good personal hygiene practices essential, such as avoiding food, tobacco products, or other hand-to-mouth contact when handling. Wash thoroughly after handling.

Section 9. Physical and chemical properties

Appearance: yellow powder, finely divided odorless solid.
Specific gravity: ~ 1.85
Solubility: not soluble in water
Non –flammable
Flash point: none
Vapor pressure: < 1 mm Hg
pH: approximately 4-5
Boiling point: not applicable

No explosive or oxidizing properties

Section 10. Stability and reactivity

Stability: stable

Incompatibles: strong alkalis (bases), magnesium, strong oxidizers such as calcium hypochlorite (pool chlorine) and isocyanuric acids.

Decomposition products: heat of fire may release carbon monoxide, carbon dioxide, and sulfur dioxide. Oxides of phosphorous and ammonia reported.

Possibility of hazardous reactions: none

Section 11. Toxicological information

Acute toxicity: Mono ammonium phosphate LD_{50} (rat): > 1000mg/kg body weight
Ammonium sulfate LD_{50} (rat): 2840 mg/kg body weight
Target organs in man: respiratory system, eyes, skin. This product is an irritant to epithelial tissue, and may aggravate dermatitis. No information was found indicating the product causes sensitization.

Chronic toxicity: Pneumoconiosis, or “dusty lung” disease, may result from chronic exposure to any dust.

Reproductive toxicity: This product’s ingredients are not known to have reproductive or teratogenic effects.

Section 12. Ecological information

Ecotoxicity: negative effects unknown. Provides nutrient nitrogen and phosphorus to plant life.

Persistence/ Degradability: degrades rapidly in humid/wet environment.

Bioaccummulation: extent unknown.

Mobility in soil: slow evaporation rate; water soluble, may leach to groundwater.

Section 13. Disposal considerations

This product is not a RCRA characteristically hazardous or listed hazardous waste. Dispose of according to state or local laws, which may be more restrictive than federal laws or regulations. Used product may be altered or contaminated, creating different disposal considerations.

Section 14. Transportation information

This product is not a hazardous material under U.S. Department of Transportation (DOT) 49 CFR 172, and is not regulated by the DOT or Transport Canada "Transportation of Dangerous Goods" regulations.

Section 15. Regulatory information

International Inventory Status:

All ingredients are on the following inventories

Country(ies)	Agency	Status
United States of America	TSCA	Yes
Canada	DSL	Yes
Europe	EINECS/ELINCS	Yes
Australia	AICS	Yes
Japan	MITI	Yes
South Korea	KECL	Yes

European Risk and Safety phrases:

EU Classification:	Harmful.	
R Phrases:	22	Harmful if swallowed.
	36/37/38	Irritating to eyes, respiratory system, and skin.
S Phrases:	26	In case of contact with eyes, rinse immediately with

		plenty of water and seek medical advice.
	36	Wear suitable protective clothing.

Components:

Mono ammonium phosphate:

EU Classification:	Harmful.	
R Phrases:	22	Harmful if swallowed.
	36/37/38	Irritating to eyes, respiratory system, and skin.
S Phrases:	26	In case of contact with eyes, rinse immediately with plenty of water and seek medical advice.
	36	Wear suitable protective clothing.

Ammonium sulfate:

EU Classification:	Irritant	
R Phrases:	22	Harmful if swallowed.
	36/37/38	Irritating to eyes, respiratory system, and skin.
S Phrases:	26	In case of contact with eyes, rinse immediately with plenty of water and seek medical advice.
	36	Wear suitable protective clothing.

U.S. federal regulatory information:

None of the chemicals in this product are under SARA reporting requirements or have SARA threshold planning quantities (TPQs) or CERCLA reportable quantities (RQs), or are regulated under TSCA 8(d).

State regulatory information:

Chemicals in this product are covered under specific State regulations, as denoted below:

Alaska - Designated Toxic and Hazardous Substances: None
California – Permissible Exposure Limits for Chemical Contaminants: None
Florida – Substance List: Mica Dust, Ammonium Sulfate
Illinois – Toxic Substance List: None
Kansas – Section 302/303 List: None
Massachusetts – Substance List: Mica Dust, Ammonium Sulfate
Minnesota – List of Hazardous Substances: None
Missouri – Employer Information/Toxic Substance List: None
New Jersey – Right to Know Hazardous Substance List: None
North Dakota – List of Hazardous Chemicals, Reportable Quantities: None
Pennsylvania – Hazardous Substance List: None
Rhode Island – Hazardous Substance List: Mica Dust, Ammonium Sulfate

James Hardie Building Products
26300 La Alameda, Suite 250
Mission Viejo, CA 92691

MATERIAL SAFETY DATA SHEET

James Hardie® Building Products
26300 La Alameda, Suite 250
Mission Viejo, CA 92691
Telephone (General Information and Emergency): 1-800-942-7343 (1-800-HARDIE)

Section 1. Chemical Products and Company Identification

Product Name/Trade Names:
Hardibacker 500®, Hardibacker®, Hardisoffit®, Hardipanel®, Hardiplank®, Harditex®, Hardishingle™

Other Names: Fiber-cement, Fiber-reinforced cement

Use: The above products are used as internal/external wall cladding and tile underlayment.

Manufacturer: James Hardie® Building Products, 26300 La Alameda, Suite 250, Mission Viejo, CA 92691

Effective Date: December 10, 2003. Check to verify the latest version or translation availability.

NOTE: As of the date of the preparation of this document, the information contained herein is believed to be accurate.

Substance Name	**CAS NUMBER**	**UN Number**	**EINECS Number**	**Proportion** (by weight)
Crystalline Silica (Quartz)	14808-60-7	Not a hazardous material for shipping purposes	238-878-4	35-45%
Calcium Silicate (Hydrate)	65997-15-1	Not a hazardous material for shipping purposes	266-043-4	50-60%
Cellulose	9004-34-6	Not a hazardous material for shipping purposes	232-674-9	<10%
Other non hazardous ingredients (fillers)				<10%

Coated products are coated with water-based acrylic paint or acrylic sealer.

Section 2. Hazardous Ingredients/Identity Information

Substance Name	**CAS NUMBER**	**UN Number**	**EINECS Number**	**Proportion** (by weight)
Crystalline Silica (Quartz)	14808-60-7	Not a hazardous material for shipping purposes	238-878-4	35-45%
Calcium Silicate (Hydrate)	65997-15-1	Not a hazardous material for shipping purposes	266-043-4	50-60%
Cellulose	9004-34-6	Not a hazardous material for shipping purposes	232-674-9	<10%

Section 3. Hazards Identification

Emergency Overview: Not explosive, not a fire hazard.

Primary Routes of Entry and Potential Health Effects:

Inhalation:
Acute effects. Dust may cause irritation of the nose, throat, and airways, resulting in coughing and sneezing. Certain susceptible individuals may experience wheezing (spasms of the bronchial airways) on inhaling dust during sanding or sawing operations.

Chronic Effects. Repeated and prolonged overexposures to dust containing crystalline silica causes silicosis (scarring of the lung) and increases the risk of bronchitis, tuberculosis, lung cancer, renal disease, and scleroderma (a disease affecting the connective tissue of the skin, joints, blood vessels, and internal organs). Studies have shown cigarette smoking increases the risk of silicosis, bronchitis and lung cancer in persons also exposed to crystalline silica.

Acute silicosis, a sub-chronic disease associated with acute, massive silica exposure, is a rapidly progressive, incurable lung disease that is typically fatal. Symptoms include, but are not limited to, shortness of breath, cough, fever, weight loss and chest pain. Such exposure may cause pneumoconiosis and pulmonary fibrosis.

Ingestion:
Unlikely under normal conditions of use, but swallowing the dust from this product may result in irritation or damage to the mouth and gastrointestinal tract due to alkalinity of dust.

Eye:
Dust may irritate the eyes from mechanical abrasion causing watering and redness.

Skin:
Dust may cause irritation of the skin from friction but cannot be absorbed through intact skin.

Medical conditions generally aggravated by exposure: Pulmonary function may be reduced by inhalation of respirable crystalline silica and/or cellulose. If lung scarring occurs, such scarring could aggravate other lung conditions such as asthma, emphysema, pneumonia or restrictive lung diseases. Lung scarring from crystalline silica may also increase risks to pulmonary tuberculosis.

Smoking:
Cigarette smoking increases the risk of occupational respiratory diseases.

Carcinogenicity:

California Proposition 65 Warning:
Respirable crystalline silica is known to the State of California to cause cancer.

International Agency for the Research on Cancer (IARC):
Crystalline silica inhaled in the forms of quartz or cristobalite from occupational sources is carcinogenic to humans.

The National Toxicology Program (NTP):
NTP has concluded that respirable crystalline silica is a known human carcinogen.

LD50:
Silicon Dioxide: Rat oral >22,500 mg/kg; Mouse oral >10,500 mg/kg.

NFPA Ratings (Scale 0-4): health=2, flammability=0, reactivity=0, personal protection=E.

Section 4. First Aid Measures

Signs and symptoms of over exposure: Breathlessness, wheezing, cough, sputum production.

First Aid:

Swallowed:
If swallowed, dilute by drinking large amounts of water. Do not induce vomiting. Seek medical attention. If unconscious, loosen tight clothing and lay the person on his/her left side. Give nothing by mouth to an individual who is not alert and conscious.

Eye Contact:
Remove contact lens. Flush with running water or saline for at least 15 minutes. Seek medical attention if redness persists or if visual changes occur.

Skin Contact:
Wash with mild soap and water. Contact physician if irritation persists or later develops.

Inhaled:
Remove to fresh air. If shortness of breath or wheezing develop, seek medical attention.

ADVICE TO DOCTOR: Treat symptomatically.

Section 5. Fire Fighting Measures

James Hardie® fiber-cement products are neither flammable nor explosive.

Fire and Explosion Hazard:
1. Flash Point: Not applicable.
2. Auto-ignition: Not applicable.
3. Non-flammable and non-explosive.

Extinguishing Media: This material is not combustible. Appropriate extinguishing media for surrounding fire should be used.

Fire Fighting: Fire fighting personnel should wear normal protective equipment and positive self-contained breathing apparatus.

Section 6. Accidental Release Measures

No special precautions are necessary to pick up product that has been dropped. The following applies to spills or releases of dust generated during cutting or sanding of the material.

Precautions: Good housekeeping practices are necessary for cleaning up areas where spills or leaks have occurred. Take measures to either eliminate or minimize the creation of dust. Respirable dust and silica levels should be monitored regularly.

Wherever possible, practices likely to generate dust should be controlled with engineering controls such as local exhaust ventilation, dust suppression with water and containment, enclosure or covers.

Use respiratory protection as described in Section 8.

Cleanup Methods: A fine water spray should be used to suppress dust when sweeping (dry sweeping should not be attempted). Vacuuming, preferably with an industrial vacuum cleaner outfitted with a high-efficiency particulate (HEPA) filter, is preferred to sweeping. Waste may be disposed of by landfill in compliance with federal, state and local requirements.

In the event of an accidental release, observe all protection measures set out in this MSDS. Avoid using materials and products that are incompatible with the product. (refer to Section 10)

Section 7. Handling and Storage

Note: The fiber cement boards in their intact state do not present a health hazard. The controls below apply to dust generated from the boards by cutting, drilling, routing, sawing, crushing, or otherwise abrading, and cleaning or moving sawdust.

James Hardie®'s recommendation: Keep exposure to dust as low as reasonably possible. Respirable crystalline silica levels should not exceed those specified by OSHA and MSHA and identified in this MSDS. Exposure to respirable (fine) silica dust depends on a variety of factors, including activity rate (e.g. cutting rate), method of handling (e.g. electric shears), environmental conditions (e.g. weather conditions, workstation orientation) and control measures used.

Wherever possible, practices likely to generate dust should be carried out in well ventilated areas (e.g. outside).

At a minimum, the following methods and/or tools are required to minimize dust levels:

"Score and Snap" method with score and snap knife.
Manual, electric or pneumatic shears.
Circular saw blades specifically designed for cutting fiber cement (e.g. Hitachi Hardiblade).
Power tools outfitted with dust collection/vacuum systems with high-efficiency particulate air (HEPA) filter, or wet-cutting systems.
Vacuuming with HEPA filter.

DO NOT saw cut indoors.

DO NOT dry-saw with any type of masonry blade such as a segmented or continuous rim diamond blade, or with any other type of grinding or abrasive-type wheel.

DO NOT dry sweep.

DO NOT work in windy/dusty condition, when wind/dust is blowing toward other persons.

Keep away from reactive products. Do not store near food, beverages or smoking materials. Avoid spilling and creating dust. Maintain appropriate dust controls during handling. Use appropriate respiratory protection during handling as described in Section 8.

Section 8. Exposure Controls and Personal Protection

OSHA Permissible Exposure Standards (PEL): Exposures shall not exceed an 8-hour time weighted average limit as stated in 29 CFR § 1910.1000 Table Z-3 for mineral dusts, expressed in million particles per cubic feet (Mppcf) and/or milligrams per cubic meter (mg/m^3). The American Conference of Governmental Industrial Hygienists Threshold Limit Values (TLV) is a recommended exposure limit based on an 8-hour time-weighted average.

		TLV mg/m³	PEL Mppcf	PEL mg/m³
Crystalline Silica	(Quartz)	0.05 mg/m³	250	10mg/m³
	(Respirable)		%SiO_2+5	%SiO_2+2
Quartz	(Total Dust)	—	—	30mg/m³
				%SiO_2+2
Calcium Silicate	(Total Dust)			15mg/m³
	(Respirable)			5 mg/m³
Nuisance Dust	(Not Otherwise Specified)			
	(Total Dust)	50		15mg/m³
	(Respirable)	15		5 mg/m³
Cellulose	(Total)			15mg/m³
	(Respirable)			5 mg/m³

Other Limits Recommended: The National Institute of Occupational Safety and Health also has a Recommended Exposure Limit (REL) of 0.05 mg/m³ for respirable crystalline silica, based on a 10-hour time-weighted average.

Products may be coated. If coated, the coating will be water based acrylic paint or acrylic sealer.

Personal Protection: When handling products that may generate silica dust: (1) Work outdoors where feasible, otherwise use mechanical ventilation, (2) Wear a dust mask or, if dust may exceed PEL, use NIOSH, OSHA or MSHA approved respirator, and (3) Warn others in area.

Use and maintain respirators that conform to ANSI Standard (Z88.2) particulate respirators. Select respirators based on the level of exposure to crystalline silica as measured by dust sampling. Use respirators that offer protection to the highest concentrations of crystalline silica if the actual concentrations are unknown. Put in place a respiratory protection and monitoring program that complies with MSHA or OSHA (e.g. 29 CFR 1910.134) standards, which include provisions for a user training program, respirator repair and cleaning, respirator fit testing and other requirements. Comply with all other federal and state laws.

Section 9. Physical and Chemical Properties

Appearance and Odor: Solid gray boards with varying dimensions according to product

Vapor Pressure: Not Relevant
Flash Point: Not Relevant
Specific Gravity: Not Relevant
Autoignition Temp: Not Relevant
Flammability Limits: Not Relevant
Volatility: Not Relevant
Boiling Point: Not Relevant
Solubility in Water: Not Relevant
Melting Points: Not Relevant
Evaporation Rate: Not Applicable
NFPA Ratings (SCALE 0-4): health=2, flammability=0, reactivity=0, personal protection=E

Section 10. Stability and Reactivity

Stability: Crystalline silica is stable under ordinary conditions.

Conditions to Avoid: Excessive dust generation during storage and handling.

Materials to Avoid:

Incompatibility: Hydrofluoric acid will dissolve silica and can generate silicon tetrafluoride, a corrosive gas. Contact with strong oxidizing agents such as fluorine, boron trifluoride, chlorine trifluoride, manganese trifluoride or oxygen difluoride may cause fires and/or explosions.

Section 11. Toxicological Information

This product is not toxic in its intact form. The following applies to dust that may be generated during cutting and sanding:

Chronic Effects:

Inhaled:

Repeated and prolonged overexposures to dust containing crystalline silica causes silicosis (scarring of the lung) and increases the risk of bronchitis, tuberculosis, lung cancer, renal disease and scleroderma (a disease affecting the connective tissue of the skin, joints, blood vessels and internal organs). Studies have shown cigarette smoking increases the risk of silicosis, bronchitis, and lung cancer in persons also exposed to crystalline silica. Acute silicosis is a rapidly progressive, incurable lung disease that is typically fatal. Symptoms include, but are not limited to: shortness of breath, cough, fever, weight loss and chest pain. Such exposure may cause pneumoconiosis and pulmonary fibrosis.

The following relates to health effects of cellulose: Based on limited animal research, it is possible that repeated chronic inhalation exposure to cellulose fiber dust over time may lead to inflammation and scarring of the lung in humans. Precautions taken for crystalline silica dust will protect against cellulose.

Section 12. Ecological Information

There is a very limited amount of ecological data available on the effects of releases that may occur from this product being released into the environment. Clean up of the spilled product would not be expected to leave any hazardous material that could cause a significant adverse impact. There is a limited amount of ecological data available on crystalline silica, primarily because it is a naturally occurring mineral. An adequate representation of these data is beyond the scope of this document.

Section 13. Disposal Consideration

Dispose of material as inert, non-metallic mineral in conformance with local, state and federal regulations. Crystalline silica is not a RCRA hazardous waste.

Section 14. Transport Information

There are no special requirements for storage and transport.

UN No: None Allocated.
Dangerous Goods Class: None Allocated.
Hazchem Code: None Allocated.
Poisons Schedule: None Allocated.
Packing Group: Not Applicable.
Label: Not a DOT hazardous material. Local regulations may apply.

Section 15. Regulatory Information

DOT Hazard Classification: None.

Placard requirement: Not a DOT hazardous material. Local placarding regulations may apply.

California Proposition 65: Warning: Airborne particles of respirable size of crystalline silica are known to the State of California to cause cancer.

CERCLA Hazardous Substance (40 CFR Part 302):

Listed Substance: No.
Unlisted Substance: No.
Reportable Quantity (RQ): None.
Characteristic(s): Not applicable.
RCRA Waste Number: Not applicable.

SARA, Title III, Sections 302/303 (40 CFR Part 355 – Emergency Planning and Notification):

Extremely Hazardous Substance: No.

SARA, Title III, Sections 311/312 (40 CFR Part 370 – Hazardous Chemical Reporting: Community Right-To-Know):

Acute: Yes. Chronic: Yes. Fire: No. Pressure: No. Reactivity: No.

SARA, Title III, Sections 313 (40 CFR Part 372 – Toxic chemical Release Reporting: Community Right-To-Know):

Not a RCRA Hazardous Waste.

TSCA Inventory List: Yes.

TSCA 8(d): No.

WARNING

WARNING
AVOID BREATHING SILICA DUST

Product contains silica. Inhalation of respirable silica dust can cause silicosis a potentially disabling lung disease, and is known to the State of California to cause lung cancer. When drilling, cutting, or abrading product during installation or handling, (1) Work outdoors where feasible, otherwise use mechanical ventilation, (2) Wear a dust mask or, if dust may exceed PEL, use NIOSH approved respirator, (3) Warn others in area. For further information, refer to material safety data sheet.

This form has been prepared to meet current Federal OSHA hazard communication regulations and is offered without any warranty or guarantee of any type. James Hardie® Building Products cannot control the use of its products, and therefore specifically disclaims liability and responsibility arising from the use, misuse and alteration of its products.

The information contained on this MSDS was produced without independent scientific or medical studies analyzing the effects of silica upon human health. The information contained herein is based upon scientific and other data James Hardie® Building Products believes is valid and reliable and provides the basis for this MSDS. The information contained herein relates only to specific materials listed in the document. It does not address the effects of silica when used in combination with other materials or substances, or when used in other processes. Because conditions of use are beyond James Hardie® Building Products control, the company makes no representations, guarantees or warranties, either express or implied warranties as to the fitness of the product for use, and assumes no liability related to the information contained above.

James Hardie® Building Products requires, as a condition of use of its products, that purchasers comply with all applicable Federal, State, and Local health and safety laws, regulations, orders, requirements, and strictly adhere to all instructions and warnings which accompany the product.

Anti Fog Coating

Improves Light Transmission and Prevents Plant Disease

Polygal Polycarbonate sheets can be Anti-Fog coated upon request. This factory-applied, silicone-based coating combines long lasting anti-fogging properties with excellent adhesion and great stability under exposure to environmental chemicals.

Anti-Fog coated Polycarbonate sheets show improved abrasion resistance, resulting in very good rub-off and wash-off resistance.

When used in greenhouse applications, Anti-Fog treated Polygal Polycarbonate sheets increase light transmission and protect against plant diseases by eliminating condensed water drip.

Polygal PCSS Material Safety Data Sheet

Date of issue: November 27, 2000

1. Identification of the substance, preparation and manufacturer:

Hollow Profile Sheet made of Polycarbonate

Cas # :

Polygal Plastics Industries Ltd.

Ramat Hashofet 19238 ISRAEL

Phone: 972-4-959-6222, Fax: 972-4-959-6296,

Email: sales@polygal.co.il

Website: www.polygal.com

2. Composition/Information on Ingredients:

Polycarbonate based on Bisphenol A

3. Hazard Identifications:

Emergency Overview:

Sheets have almost no odor. Can burn in fire creating dense toxic smoke. If heated to melt-point the molten plastic can cause severe thermal burns. Secondary operations, such as grinding, sanding or sawing can produce dust, which may create a respiratory or explosion hazard.

Potential Health Effects

EYE: Product may cause irritation or injury due to mechanical action.
SKIN: Sheets are not likely to cause skin irritation. If heated to melt-point the molten plastic can cause severe thermal burns.
INGESTION: Not acutely toxic.
INHALATION: Unlikely due to physical form.
CHRONIC/CARCINOGENICITY: Not listed
MEDICAL RESTRICTIONS: There are no known human health effects aggravated by exposure to this product.

4. First-Aid Measures:

EMERGENCY AND FIRST AID INFORMATION:
EYES: Remove contact lenses at once. Immediately flush eyes well with copious quantifies of water or normal saline for at least 20-30 minutes. If irritation persists, seek medical attention.
SKIN: Wash skin thoroughly with soap and water. Seek medical attention if rash or burn occurs.
INGESTION: Not probable. If large amount is swallowed, seek medical attention.
INHALATION: Not likely due to physical form.
BURNS: Burns by molten material must receive medical attention. Do not try to remove melted PC from skin.

5. Fire-Fighting Measures:

Extinguishing materials: water spray is recommended due to its cooling capacity. Other materials such as extinguishing powder, CO_2 , Foam, dry powder are also possible.
Firemen must wear self-contained breathing apparatus.
FLASH POINT: Not applicable
AUTO IGNITION TEMPERATURE: 630°C (1166°F) estimated
LOWER EXPOSURE LIMIT(%): Not established
UPPER EXPOSURE LIMIT (%): Not established
HAZARDOUS COMBUSTION BY-PRODUCTS: Hazardous combustion by-products may include intense heat, dense black smoke, carbon monoxide, carbon dioxide and hydrocarbon fragments.

6. Accidental Release Measures:

Sweep or gather up material mechanically.

7. Handling and Storage:

Ensure adequate ventilation or exhaust ventilation in the working area. Dust must be removed by effective exhaust ventilation.
Avoid contact or proximity with PVC plasticizers (phtalates).

Store in a dry place away from moisture, excessive heat and sources of combustion.

8. Exposure Controls / Personal Protection:

No specific exposure related hazards are known.

Wear protective gloves while handling sheets.

9. Physical and Chemical Properties:

Form: Hollow Plastic Sheet

Color:

Colorless or pigmented:

Clear, Opal Ice, Bronze, Blue,

Green, Grey and other Odor: Odorless Softening Point: 150-160°C (300-320°F)

Density: Material: 1200 kg/m? at 20°C

Sheet: 125-250 kg/m3 Vapor Pressure: Not Applicable

Viscosity: Not Applicable

Solubility in Water: Insoluble

pH Value: Not Applicable

Flash Ignition Temperature: > 450°C (842°F)

Self Ignition Temperature: > 450°C (842°F)

Explosive Limit: Not Applicable

10. Stability and Reactivity:

Thermal decomposition: Decomposition begins at 380°C (716°F).

Hazardous decomposition products: in cases of smoldering and incomplete combustion, toxic fumes mainly consisting of CO and CO2 may develop as well as traces of Aliphatic and Aromatic Hydrocarbons, Aldehydes, Acids, Phenol and Phenol-derivatives.

Hazardous reactions: No hazardous reactions observed.

11. Toxicological Information:

EYE: Product not considered as a primary eye irritant.

SKIN: Product not considered as a primary skin irritant.

Dermal LD50 (rabbit) >2g/kg estimated.

ACUTE ORAL: Oral LD50 (rat) >5g/kg estimated

12. Ecological Information

WATER: Water pollution class (WGK): 0 - not generally hazardous to water.

GENERAL: Not expected to present any significant ecological problems.

13. Disposal Considerations:

RECYCLE AND DISCHARGE: The product is suitable for mechanical recycling. After appropriate treatment it can be remelted and processed into new molded articles.

Mechanical recycling is possible if the material has been selectively retrieved and carefully segregated according to type.

May be discharged or incinerated together with household refuse if local official regulations are observed.

STEPS TO BE TAKEN IN CASE MATERIAL IS RELEASED OR SPILLED:

Sweep or gather up material and place in proper container for disposal or recovery.

14. Transport Information

DOT HAZARD CLASS: Not regulated

PROPER SHIPPING NAME: Not regulated

IDENTIFICATION NUMBER: Not listed

OTHER INFORMATION: Not Dangerous Cargo. Keep Dry.

15. Regulatory Information

No labeling is required in accordance with the EEC directives.

In connection with dusts formed in consequence of mechanical treatment, e.g. grinding, the appropriate regulation/maximal values for fine dusts must be observed:

MAX Value (fine dust): 6 mg/m3

This product does not contain reportable quantities of substances subject to supplier notification.

16. Other Information

The safety data sheet is valid for Polycarbonate (bisphenol-A-carbonate).

The trade names of the base resin are Makrolon of Bayer AG Germany and Lexan of General Electric Plastics B.V. Holland.

Pigments and additives used to enhance specific properties are encapsulated in the polymer resin matrix, and/or on the sheet surface.

THOMPSON AND FORMBY INC -- THOMPSON'S WATER SEAL, WATERPROOFING FORMULA

==========

MSDS Safety Information

==========

FSC: 8030
NIIN: 00-555-2878
MSDS Date: 02/11/1994
MSDS Num: BJQTC
Product ID: THOMPSON'S WATER SEAL, WATERPROOFING FORMULA
MFN: 01
Responsible Party
Cage: 63727
Name: THOMPSON AND FORMBY INC
Address: 825 CROSSOVER LANE
City: MEMPHIS TN 38117
Info Phone Number: 901-685-7555
Emergency Phone Number: 201-573-5700 800-424-9300
Review Ind: Y
Published: Y

==========

Contractor Summary

==========

Cage: 63727
Name: THOMPSON AND FORMBY INC
Address: 825 CROSSOVER LN SUITE 240 BLDG C
City: MEMPHIS TN 38117-4934
Phone: 901-685-7555

==========

Item Description Information

==========

Item Manager: GSA
Item Name: SEALING COMPOUND
Specification Number: NONE
Type/Grade/Class: NONE
Unit of Issue: GL
UI Container Qty: 1 GALLON
Type of Container: CAN

==========

Ingredients

==========

Cas: 64742-88-7
RTECS #: 1003692SN
Name: SOLVENT NAPHTHA (PETROLEUM) MEDIUM ALIPHATIC
% Wt: 75-80
OSHA PEL: 5 MG/M3 (OIL MIST)
ACGIH TLV: 5 MG/M3 (OIL MIST)

==========

Health Hazards Data

==========

LD50 LC50 Mixture: LD50 (ORAL RAT) IS UNKNOWN
Route Of Entry Inds - Inhalation: YES
Skin: YES
Ingestion: YES
Carcinogenicity Inds - NTP: NO
IARC: NO
OSHA: NO

Effects of Exposure: INHALED:AVOID PROLONGED BREATHING OF VAPORS. DO NOT
BREATHE SPRAY MIST. SKIN:AVOID PROLONGED OR REPEATED CONTACT W/SKIN. EYE:WEAR
EYE PROTECTION TO AVOID CONTACT W/EYES. INGESTED:HARMFUL OR FATAL IF
SWALLOWED. INTENTIONAL MISUSE BY DELIBERA TELY CONCENTRATING AND INHLAING THE
CONTENTS MAY BE HARMFUL OR FATAL.
Explanation Of Carcinogenicity: MANUFACTURER GAVE NO COMMENTS OTHER THAN THE
ABOVE REFERENCES TO THE THREE LISTINGS.
Signs And Symptions Of Overexposure: IF YOU EXPERIENCE EYE WATERING, HEADACHE,
DIZZINESS; INCREASE AIR, WEAR RESPIRATORY PROTECTION OR LEAVE AREA.
Medical Cond Aggravated By Exposure: PRI-EXISTING EYE, SKIN AND RESPIRATORY
DISORDERS MAY BE AGGRAVATED BY EXPOSURE TO THIS PRODUCT.
First Aid: INHALED:IF AFFECTED BY INHALATION OF VAPOR OR SPRAY MIST, REMOVE TO
FRESH AIR. SKIN:IN KEEPING W/GOOD HYGIENIC PRACTICE, WASH THOROUGHLY W/SOAP
& WATER. EYE:IN CASE OF EYE CONTACT, FLUSH IMMEDIATELY W/PLENTY OF WATER.
INGESTED:IF SWALLOWED, DO NOT INDUCE VOMITING. GET IMMEDIATE MEDICAL
ATTENTION.
==========
Handling and Disposal
==========
Spill Release Procedures: ABSORB WITH SAND OR OTHER SUITABLE ABSORBENT
MATERIAL. THEN PLACE IN A CONTAINER FOR DISPOSAL.
Neutralizing Agent: MFR GAVE NO INFORMATION ON MSDS.
Waste Disposal Methods: VEST DISPOSAL IS BY CONSUMING THROUGH INGENDED USE.
DISPOSE OF EXCESS PRODUCT IN ACCORDANCE WITH LOCAL, STATE AND FEDERAL
REGULATIONS GOVERNING COMBUSTIBLE WASTE.
Handling And Storage Precautions: CONTAINS PETROLEUM DISTILLATES. DO NOT USE
NEAR SPARKS,HEAT OR FLAME. AVOID PROLONGED BREATHING OF VAPORS. DO NOT
BREATHE SPRAY MIST.
Other Precautions: USE IN WELL VENTILATED AREA. OPEN WINDOWS AND DOORS ORUSE
OTHER MEANS TO INSURE FRESH AIR ENTRY DURING APPLICATION AND DRYING. IFYOU
EXPERIENCE EYE WATERING,HEADACHE OR DIZZINESS, INCREASE FRESH AIR,
SEARRESPIRATOR OR LEAVE AREA.
==========
Fire and Explosion Hazard Information
==========
Flash Point Method: SCC
Flash Point Text: <101F,<38C
Lower Limits: 1.0
Upper Limits: 6.0
Extinguishing Media: USE WATER FOG, FOAM, DRY CHEMICAL OR CARBON DIOXIDE. DO
NOT USE A DIRECT STREAM OF WATER. PRODUCT WILL FLOAT & REIGNITE.
Fire Fighting Procedures: TO ENTER CONFINED FIRE SPACE USE FULL BUNKER

GEAR
W/POSITIVE PRESSURE NIOSH APPROVED SELF-CONTAINED BREATHING APPARATUS. COOL
FIRE EXPOSED CONTAINERS W/WATER.
Unusual Fire/Explosion Hazard: COMBUSTIBLE! DO NOT USE NEAR SPARKS,HEAT,FLAME.
FIRE EXPOSED CONTAINERS SHOULD BE COOLED W/WTO PREVENT RUPTURE.
==========
Control Measures
==========
Respiratory Protection: DO NOT BREATHE SPRAY MIST. IF YOU EXPERIENCE EYE
WATERING,HEADACHE OR DIZZINESS, INCREASE FRESH AIR, WEAR RESPIRATOR
(NIOSH/MSHA TC23C OR EQUIVALENT APPROVED) OR LEAVE AREA.
Ventilation: AVOID PROLONGED BREATHING OF VAPORS. USE IN WELL VENTILATED AREA.
OPEN DOORS & WINDOWS TO ENSURE FRESH AIR DURING USE.
Protective Gloves: AVOID PROLONGED/REPEATED SKIN CONTACT
Eye Protection: WEAR EYE PROTECTION. PREVENT EYE CONTACT
Other Protective Equipment: NONE REQUIRED
Work Hygienic Practices: USE GOOD CHEMICAL HYGIENE PRACTICE. AVOID ALL
UNNECESSARY EXPOSURE. WASH THOROUGHLY BEFORE EATING OR DRINKING.
Supplemental Safety and Health: NONE
==========
Physical/Chemical Properties
==========
HCC: F4
NRC/State LIC No: NONE
Net Prop WT For Ammo: NONE
B.P. Text: 318F,159C
M.P/F.P Text: UNKNOWN
Decomp Text: UNKNOWN
Vapor Pres: <55
Vapor Density: 4.8
Spec Gravity: 0.80
Evaporation Rate & Reference: UNKNOWN
Solubility in Water: INSOLUBLE
Appearance and Odor: AMBER MOBILE LIQUID, PETROLEUM SOLVENT ODOR
Percent Volatiles by Volume: 85
Corrosion Rate: UNKNOWN
==========
Reactivity Data
==========
Stability Indicator: YES
Stability Condition To Avoid: DO NOT USE NEAR HEAT, SPARK, FLAMES.
Materials To Avoid: STRONG OXIDIZING AGENTS
Hazardous Decomposition Products: CARBON MONOXIDE, CARBON DIOXIDE, AND
UNIDENTIFIED ORGANIC COMPOUNDS MAY BE FORMED DURING COMBUSTION.
Hazardous Polymerization Indicator: NO
Conditions To Avoid Polymerization: WILL NOT OCCUR.
==========
Toxicological Information
==========
==========
Ecological Information
==========
==========

MSDS Transport Information
==========
==========
Regulatory Information
==========
==========
Other Information
==========
==========
Transportation Information
==========
Responsible Party Cage: 63727
Trans ID NO: 76672
Product ID: THOMPSON'S WATER SEAL, WATERPROOFING FORMULA
MSDS Prepared Date: 02/11/1994
Review Date: 12/31/1994
MFN: 1
Net Unit Weight: UNKNOWN
Multiple KIT Number: 0
Review IND: Y
Unit Of Issue: GL
Container QTY: 1 GALLON
Type Of Container: CAN
Additional Data: THE PRODUCT IS CLASSIFIED AS A PAINT, P.G. III.
HOWEVER IF
  SHIPPING DOMESTICALLY, IT QUALIFIES AS A COMBUSTIBLE LIQUID WHICH IS
NOT
  REGULATED IN ONE GALLON SIZES.
==========
Detail DOT Information
==========
DOT PSN Code: XXX
==========
Detail IMO Information
==========
IMO PSN Code: LCT
IMO Proper Shipping Name: PAINT OR PAINT RELATED MATERIAL
IMO PSN Modifier: (INCLUDING PAINT, LACQUER, ENAMEL, STAIN, SHELLAC
SOLUTIONS,
  VARNISH, POLISH, LIQUID FILLER AND LIQUID LACQUER BASE) OR (INCLUDING
PAINT
  THINNING OR REDUCING COMPOUND) o
IMDG Page Number: 3372
UN Number: 1263
UN Hazard Class: 3.3
IMO Packaging Group: III
Subsidiary Risk Label: -
EMS Number: 3-05
MED First Aid Guide NUM: 310
==========
Detail IATA Information
==========
IATA PSN Code: SXH
IATA UN ID Num: 1263
IATA Proper Shipping Name: PAINT
IATA PSN Modifier: (INCLUDING PAINT, LACQUER, ENAMEL, STAIN, SHELLAC,
VARNISH,

POLISH, LIQUID FILLER AND LIQUID LACQUER BASE)
IATA UN Class: 3
IATA Label: FLAMMABLE LIQUID
UN Packing Group: III
Packing Note Passenger: 309
Max Quant Pass: 60L
Max Quant Cargo: 220L
Packaging Note Cargo: 310
==========
Detail AFI Information
==========
AFI PSN Code: SXH
AFI Proper Shipping Name: PAINT OR PAINT RELATED MATERIAL
AFI PSN Modifier: (INCLUDING PAINT, LACQUER, ENAMEL, STAIN, SHELLAC SOLUTIONS,
VARNISH, POLISH, LIQUID FILLER AND LIQUID LACQUER BASE) OR (INCLUDIN PAINT
THINNING OR REDUCING COMPOUNDS)
AFI Hazard Class: 3
AFI UN ID NUM: UN1263
AFI Packing Group: III
Special Provisions: P5
Back Pack Reference: A7.3
==========
HAZCOM Label
==========
Product ID: THOMPSON'S WATER SEAL, WATERPROOFING FORMULA
Cage: 63727
Company Name: THOMPSON AND FORMBY INC
Street: 825 CROSSOVER LN SUITE 240 BLDG C
City: MEMPHIS TN
Zipcode: 38117-4934
Health Emergency Phone: 901-685-7555
Label Required IND: Y
Date Of Label Review: 12/31/1994
Status Code: C
MFG Label NO: NONE
Label Date: 12/31/1994
Origination Code: F
Eye Protection IND: YES
Skin Protection IND: YES
Signal Word: WARNING
Respiratory Protection IND: YES
Health Hazard: Moderate
Contact Hazard: Slight
Fire Hazard: Moderate
Reactivity Hazard: None
Hazard And Precautions: **TARGET ORGANS:SKIN, EYES, RESPIRATORY SYSTEM, CNS **
INHALED:AVOID PROLONGED BREATHING OF VAPORS. DO NOT BREATHE SPRAY MIST.
SKIN:AVOID PROLONGED OR REPEATED CONTACT W/SKIN. EYE:WEAR EYE PROTECTION TO
AVOID CONTACT W/EYES. INGESTED:HARM FUL OR FATAL IF SWALLOWED. INTENTIONAL
MISUSE BY DELIBERATELY CONCENTRATING AND INHLAING THE CONTENTS MAY BE HARMFUL

OR FATAL. CONTAINS PETROLEUM DISTILLATES. DO NOT USE NEAR SPARKS,HEAT OR
FLAME. AVOID PROLONGED BREATHING OF VAPORS. DO NOT BREATHE SPRAY MIST. IN
CASE OF SPILL: ABSORB WITH SAND OR OTHER SUITABLE ABSORBENT MATERIAL. THEN
PLACE IN A CONTAINER FOR DISPOSAL.

==========

Material Safety Data Sheet

BOISE

SECTION 1 CHEMICAL PRODUCT AND COMPANY IDENTIFICATION

Product Name:	Phenol-Formaldehyde Bonded Wood Products plus a polyurethane film: softwood plywood (veneer core), laminated veneer lumber, and wood I-joists.
Trade Name:	Laminated veneer lumber (LVL): Versa-Lam®, Versa-Rim®, Plywood: Sheathing Wood I-Joist: BCI®
Manufacturer/Distributor:	Boise Cascade, LLC P.O. Box 62 Boise, ID 83707-0062
Phone Number:	1/800/228-0815
Description:	The plywood panel product contains bonded layers of softwood veneer. The laminated veneer lumber is manufactured with all grain parallel with the length of the member. The wood I-joists are manufactured with LVL flanges bonded to either plywood or OSB webs. These products are bonded together with resins that comply with ASTM D2559.

SECTION 2 COMPOSITION, INFORMATION ON INGREDIENTS

MATERIAL OR COMPONENT	C.A.S. #	PERCENT
Formaldehyde	50-00-0	<0.1% by weight
Solid Polyurethane Film	Not Applicable	2.67% by weight
Wood Dust (soft and most hardwoods, except Western Red Cedar, Beech, and Oak)	Not Applicable	

Component	OSHA PEL	ACGIH TLV
Formaldehyde (<0.1% by weight)	0.75 ppm TWA 2.0 ppm STEL 0.5 ppm Action Level	0.3 ppm ceiling
Solid Polyurethane Film	Not applicable	Not applicable
Wood Dust	15.0 mg/m^3 TWA (Total) 5.0 mg/m^3 TWA (Respirable)	Nonallergenic and noncarcinogenic 2 mg/m3 Western Red Cedar 0.5 mg/m3 Other respiratory allergenic wood dust, Birch, Mahogan, Teak, Walnut, Oak and Beech 1 mg/m3

SECTION 3 HAZARDS IDENTIFICATION

INHALATION
Dust may cause nasal dryness, irritation, coughing, and sinusitis. Repeated exposures (even below 5 mg/m^3) to certain wood dusts can produce allergic responses in some sensitive individuals.

SKIN CONTACT
Both formaldehyde and various species of wood dust may evoke allergic contact dermatitis in sensitized individuals.

SKIN ABSORPTION
Not applicable for product in purchased form.

EYE CONTACT
Dust may cause temporary irritation, mechanical irritation, or a burning sensation to the eyes.

INGESTION
Not applicable for product in purchased form.

WOOD DUST: Wood dust may cause nasal dryness, irritation, and obstruction. Coughing, wheezing, and sneezing; sinusitis and prolonged colds have also been reported.

Depending on species, may cause respiratory sensitization and/or irritation. Wood dust is not classified as a potential cancer hazard by OSHA. The National Toxicology Program (NTP), the International Agency for Research on Cancer (IARC) do classify wood dust as a carcinogen to humans (Group 1). This classification is based primarily on IARC's evaluation of increased risk in the occurrence of adenocarcinomas of the nasal cavities and paranasal sinuses associated with exposure to wood dust. IARC did not find sufficient evidence to associate cancers of the oropharynx, hypopharynx, lung, lymphatic and hematopoietic systems, stomach, colon, or rectum with exposure to wood dust.

FORMALDEHYDE: May cause temporary irritation to eyes, nose and throat. Some reports suggest that formaldehyde may cause respiratory sensitization, such as asthma, and the preexisting respiratory disorders may be aggravated by exposure.

Formaldehyde is listed by IARC as a probable human carcinogen. The NTP includes formaldehyde in the Annual Report on Carcinogens. Formaldehyde is regulated by OSHA as a potential cancer agent.

In studies involving rats, formaldehyde has been shown to cause nasal cancer after long-term exposure to very high concentrations (14+ ppm), far above those normally found in the workplace using this product.

The National Cancer Institute (NCI) conducted an epidemiological study of industrial workers exposed to formaldehyde (published June 1986). The NCI concluded that the data provides little evidence that mortality from cancer is associated with formaldehyde exposure at the levels experienced by workers in the study.

Polyurethane Film is not listed as a carcinogen by the International Agency for Research on Cancer, the National Toxicology Program, or the Occupational Safety and Health Administration.

SECTION 4 FIRST-AID MEASURES

INHALATION
Remove to fresh air. If persistent irritation, severe coughing, or breathing difficulty occurs, get medical attention.

EYE CONTACT
Remove contact lenses (if applicable). Flush eyes, including under

eyelids, with large amounts of water. Remove to fresh air. If irritation persists, get medical attention.

SKIN CONTACT
Wash affected areas with soap and water. If rash or persistent irritation or dermatitis occurs, get medical attention.

INGESTION
Not applicable for product in purchased form.

SECTION 5 FIRE FIGHTING MEASURES

FIRE AND EXPLOSION

FLASH POINT
Not applicable

AUTO IGNITION TEMPERATURE
Dependent upon duration of exposure to heat source and other variables.
400° - 500°F(204° - 260°C)

FLAMMABLE LIMITS IN AIR (% BY VOLUME)
An airborne concentration of 40 grams of dust per cubic meter of air is often used as the lowest explosion limit (LEL) for wood dust.

Formaldehyde
LEL 7% UEL 73%

SPECIAL FIRE FIGHTING PROCEDURES
Burns like other wood products, although it is dangerous and may burn hotter. Partially burned dust is especially hazardous if dispersed into the air. Remove burned or wet dust to an open area after fire is extinguished.

EXTINGUISHING MEDIA
Water, carbon dioxide, sand.

SECTION 6 ACCIDENTAL RELEASE MEASURES

Not applicable for product in purchased form. Sweep or vacuum dust for recovery or disposal. Wood dust cleanup and disposal activities should be accomplished in a manner to minimize creation of airborne dust.

*Appropriate Regulatory Agencies should be notified in the event of an accident.

SECTION 7 HANDLING AND STORAGE

Provide adequate ventilation to reduce the possible buildup of formaldehyde gas, particularly when high temperatures occur. Avoid dusty conditions and provide good ventilation. PF-bonded wood products should not be stored where exposure to water could occur. Wood products are combustible and, therefore, should not be subjected to temperatures exceeding the autoignition temperature.

SECTION 8 EXPOSURE CONTROLS, PERSONAL PROTECTION

PERSONAL PROTECTIVE EQUIPMENT

RESPIRATORY PROTECTION
Wear NIOSH-approved respirator when the allowable OSHA exposure limits to wood dust and/or formaldehyde may be exceeded.

EYE PROTECTION
Recommend goggles or safety glasses as conditions indicate when sawing, sanding, or machining wood products.

SKIN PROTECTION
Other protective equipment, such as gloves and outer garments, may be needed to reduce skin contact. Wash affected area of the body after contact with dust.

OTHER CLOTHING AND EQUIPMENT
Not Applicable

ENGINEERING CONTROLS

VENTILATION REQUIREMENTS
Provide local exhaust, as necessary, to meet OSHA requirements for allowable exposure limits.

OTHER TYPES OF ENGINEERING CONTROLS
Due to the explosive potential of wood dust when suspended in air, precautions should be taken during sanding, sawing, or machining of wood products to prevent sparks or other ignition sources in ventilation equipment.

SECTION 9 PHYSICAL AND CHEMICAL PROPERTIES

PHYSICAL FORM ..... :	Solid
COLOR ..... :	Light to dark tan. Color and odor are dependent upon wood species.

SECTION 11 TOXICOLOGICAL INFORMATION

WOOD DUST: Wood dust may cause nasal dryness, irritation, and obstruction. Coughing, wheezing, and sneezing; sinusitis and prolonged colds have also been reported.

Depending on species, may cause respiratory sensitization and/or irritation. Wood dust is not considered a potential cancer hazard by OSHA. The National Toxicology Program (NTP) and the International Agency for Research on Cancer (IARC) classifies wood dust as a carcinogen to humans (Group 1). This classification is based primarily on IARC's evaluation of increased risk in the occurrence of adenocarcinomas of the nasal cavities and paranasal sinuses associated with exposure to wood dust. IARC did not find sufficient evidence to associate cancers of the oropharynx, hypopharynx, lung, lymphatic and hematopoietic systems, stomach, colon, or rectum with exposure to wood dust.

FORMALDEHYDE: May cause temporary irritation to eyes, nose, and throat. Some reports suggest that formaldehyde may cause respiratory sensitization, such as asthma, and the preexisting respiratory disorders may be aggravated by exposure.

Formaldehyde is listed by IARC as a probable human carcinogen. The NTP includes formaldehyde in the Annual Report on Carcinogens. Formaldehyde is regulated by OSHA as a potential cancer agent.

In studies involving rats, formaldehyde has been shown to cause nasal cancer after long-term exposure to very high concentrations (14+ ppm), far above those normally found in the workplace using this product.

The National Cancer Institute (NCI) conducted an epidemiological study of industrial workers exposed to formaldehyde (published June 1986). The NCI concluded that the data provides little evidence that mortality from cancer is associated with formaldehyde exposure at the levels experienced by workers in the study.

Polyurethane film is not listed as a carcinogen by the International Agency for Research on Cancer, the National Toxicology Program, or the Occupational Safety and Health Administration.

SECTION 12 ECOLOGICAL INFORMATION

Not applicable for product in purchased form.

SECTION 13 DISPOSAL CONSIDERATIONS

This product is not considered hazardous waste under Federal Hazardous Waste Regulations 40 CFR 261. State and local requirements for waste disposal may be different from federal regulations. Incinerate or landfill in accordance with local, state, and federal regulations.

HAZARDOUS WASTE DESIGNATION

Not applicable

SECTION 14 TRANSPORT INFORMATION

DOT (Department of Transportation)

Proper Shipping Name:	Phenol-formaldehyde bonded wood products plus a polyurethane film
Hazard Class:	Combustible
Identification Number:	Not applicable

SECTION 15 REGULATORY INFORMATION

TSCA (Toxic Substance Control Act):

Not applicable for product in purchased form.

CERCLA (Comprehensive Response Compensation and Liability Act):

Not applicable for product in purchased form.

SARA Title III:

Not applicable for product in purchased form.

SECTION 16 OTHER INFORMATION

This fact sheet is for products that have not been finished (coated, laminated, or overlaid) or treated (for example, with preservative or fire retardant).

Wood dust is now officially regulated as an organic dust under the Particulates Not Otherwise Regulated (PNOR) or Inert or Nuisance Dust categories at PELs of: TWA - 15.0 mg/m^3 (total dust); 5.0 mg/m^3 (respirable fraction). However, a number of states have incorporated provisions of the 1989 standard in their state plans. Additionally, OSHA has announced that it may cite companies under the OSH Act General Duty Clause under appropriate circumstances for noncompliance with the 1989 PELs.

MSDS Status: Updated to new format.

References:

Isoset Adhesive Cured Film MSDS, 05/12/98, Ashland Chemical Company
Isoset CX-47 MSDS, 08/18/98, Ashland Chemical Company
Isoset UX 100 MSDS, 08/20/98, Ashland Chemical Company
Isoset WD3-A320 MSDS, 09/28/98, Ashland Chemical Company
Isoset WD3-A322 MSDS, 01/26/98, Ashland Chemical Company
Polyisocyanate Type 1 MSDS, 08/18/98, Ashland Chemical Company
BB-703 MSDS, 01/26/98, Neste Resins, Canada
Chembond, Liquid Phenol Formaldehyde Resin MSDS, 10/01/93, Neste Resins Corporation
Niaproof Anionic Surfactant 08 MSDS, 07/01/97, Van Waters & Rogers Inc.
HM-8266-L & HM-6266-L MSDS(s), 02/10/98 & 03/10/98, Linear Products Inc.
Cascowax EW-58S MSDS, 04/18/97, Borden Chemical Company
Cascophen LT-5210J (Liquid PRF Resin)MSDS, 01/11/99, Borden Chemical Company
Cascoset FM-6210S (Paraformaldehyde Catalyst) MSDS, 01/28/97, Borden Chemical Company
Cascophen Resins (Liquid PF Resins)MSDS(s), 05/30/96 through 10/07/98, Borden Chemical Company
Threshold Limit Values for Chemical Substances and Physical Agents and Biological Exposure Indices for 1998
NIOSH Pocket Guide to Chemical Hazards for June 1997
Hazardous Chemicals Desk Reference, Third Edition, Richard J. Lewis, Sr.

Current Issue: 10/02/04
Previous Issue: 01/22/03

MATERIAL SAFETY DATA SHEET

This Material Safety Data Sheet meets or exceeds the requirements of the Canadian Controlled Product Regulations (WHMIS) and the United States Occupational Safety ad Health Administration (OSHA) hazard communication standard 29 CFR 1910.1200.

1. Product and Supplier Identification

Product: Tolko Industries Ltd. OSB Products

Supplier: **Tolko Industries Ltd.**

Slave Lake Division, Mitsue Industrial Park, Slave Lake, Alberta, Canada, T0G 2A0	High Prairie Division, Highway 2 West, High Prairie, Alberta Canada, T0G 1E0	Meadow Lake OSB Limited Partnership, 12 km South of Highway 55, On Matchee/Neeb Road Meadow Lake, Saskatchewan Canada, S9X 1Y2
Emergency Telephone: **(780) 849-4333**	**(780) 523-2101**	**(306) 236-6565**

2. Composition

Component	% (w/w)	Exposure Limits	LD_{50}	LC_{50}
Wood (*Trembling Aspen, Poplar, – but not Western Red Cedar) (Meadow Lake OSB also contains Spruce and Pine)*	87-95	ACGIH TLV-TWA 1 mg/m^3 ACGIH TLV-STEL 10 mg/m^3 See note (a), (c) OSHA PEL-TWA 5 mg/m^3 OSHA PEL-STEL 10 mg/m^3	No data	No data
Polymeric Diphenylmethane Diisocyanate Polymethylene Polyphenylisocyanate (CAS No 9016-87-9)	1.5 – 4%	ACGIH TLV 0.05 mg/m^3 (8 hours/40 hours per week) OTHER See note (a) See note (c) OSHA PEL-TWA 0.05mg/m^3 (10 hours, 40 hours per week)	> 10000 mg/kg (oral, rat)	490 mg/m^3 (aerosol, 4-hour exposure), Respiratory sensitizer
Formaldehyde (CAS No. 50-00-0)	< 0.1	See note (b)	100 mg/kg (oral/rat) 270 mg/kg (dermal/ rabbit)	203 mg/m^3 (inhalation /rat)
Non-hazardous ingredients make up the remainder of the product				

ODOR ..... :	Dependent upon wood species.
BOILING POINT ..... :	Not applicable.
MELT POINT/FREEZE POINT ..... :	Not applicable.
pH ..... :	Not applicable
SOLUBILITY IN WATER ..... :	<0.1%
SPECIFIC GRAVITY ..... :	<1.0
EVAPORATION RATE ..... :	Not applicable.
% VOLATILE BY VOLUME ..... :	Not applicable.
VAPOR PRESSURE ..... :	Not applicable.
VAPOR DENSITY ..... :	Not applicable.

SECTION 10 STABILITY AND REACTIVITY

CONDITIONS CONTRIBUTING TO INSTABILITY
Stable under normal conditions. Wood dust generated from sawing, sanding, or machining the product is extremely combustible. Keep in cool, dry place away from ignition sources.

INCOMPATIBILITY (MATERIALS TO AVOID)
Avoid contact with oxidizing agents and drying oils. Avoid open flame.

HAZARDOUS DECOMPOSITION PRODUCTS
Thermal-oxidation degradative or burning of wood can produce irritating and potentially toxic fumes and gases, including carbon monoxide, aldehydes, organic acids, nitrogen compounds, hydrogen cyanide, and various hydrocarbons.

CONDITIONS CONTRIBUTING TO HAZARDOUS POLYMERIZATION
Will not occur.

Canada

(a) The Occupational Health and Safety Regulation has adopted the ACGIH exposure limits. American Conference of Governmental Industrial Hygienists (ACGIH) exposure limits may vary from time to time and from one jurisdiction to another. Check with local regulatory agency for the exposure limits in your area. (The OHS list of allergenic wood dusts includes, but is not limited to Western Red Cedar, California Redwood, Mahogany, and Oak.)

(b) The OSHA 'Action Level' is 0.5 ppm based on an 8-hour TWA under 29 CFR 1910.1048. This level is not achieved under normal occupational exposures to this product. The Occupational Health and Safety Regulation's 8-hour EL is 0.3 mg/m3 with the ALARA (As Low As Reasonably Achievable) designation.

United States

(c) Wood dust is regulated as an organic dust in a category known as " Particles Not Otherwise Regulated" (PNOR), or Nuisance dust. Certain jurisdictions recommend the use of OSHA PEL's as the standard for exposure in the workplace.

3. Hazards Identification

Hazard Summary: In the short term (acute) both wood dusts and residual formaldehyde, when inhaled, may produce respiratory symptoms and eye nose and throat irritation. Long term (chronic) effects may take on several forms. Repeat contact with wood dust containing residue formaldehyde, may result in lesions in the upper respiratory system. SENSITIZER – MDI may sensitize persons causing chest tightness, wheezing, cough, shortness in breath or asthmatic responses. Once sensitized, the individual can experience these symptoms from exposure to cold, dust, or other irritants.

Routes of Entry: Inhalation and skin contact are the major routes of entry while ingestion and eye contact are likely to be only minor. MDI vapours or mists above the TLV can irritate the mucous membranes in the respiratory tract causing a runny nose, sore throat coughing, chest discomfort, shortness of breath and reduced lung function. Persons with a non-specific bronchial hyperactivity can respond to concentrations below the TLV which may lead to bronchitis, bronchial spasm and pulmonary edema (fluid in the lungs). These effects are usually reversible. Chemical or hypersensitive pneumonitis with flu like symptoms has also been reported. sneezing, coughing, rhinorrhea, fever, muscular aches and pains, laboured breathing, naso-pharyngitis, laryngitis, and bronchitis. Wood dust can mechanically irritate the eyes and skin. Damage to the cornea may occur. Areas most commonly affected are the face, eyelids, hands, and forearms. Wood dust can deposit in and even obstruct nasal passages resulting in dryness of the nose, cough, and headache. Splinters from some softwoods may produce septic wounds that may take an extremely long time to heal.

Chronic Health Effects: Dermatitis may result from prolonged or repetitive skin contact. Some individuals can become sensitized upon prolonged or repeated exposure to wood dusts and formaldehyde. Inhalation may aggravate pre-existing respiratory conditions or allergies. Repeated or prolonged inhalation may result in asthma and/or rhinitis. These conditions may be attributed to the irritation of wood dust itself or may be due to the presence of biologically active chemical agents. Cases of pulmonary fibrosis have been reported in individuals with long-term exposure to wood dust. Woods can be contaminated with saprophytic fungus that can cause an allergic condition called hypersensitivity pneumonitis that can lead to pulmonary damage over prolonged periods of time. Repeated or prolonged exposure to the eyes can cause conjunctivitis.

In June, 2004 IARC (The International Agency for Research on Cancer) concluded that there is sufficient information to classify formaldehyde as a human carcinogen. Evidence has shown that formaldehyde can cause a relatively rare form of cancer (nasopharyngeal cancer). IARC has also found that there is limited evidence that formaldehyde may cause certain types of leukaemia.

The Occupational Health and Safety Regulation rates non-allergenic softwood dust as a 'confirmed human carcinogen'. Wood dust is listed by IARC as a Group 1 carcinogen.

4. First Aid Measures

EYE CONTACT: Treat dust as 'foreign object'. Flush contaminated eye(s) with lukewarm, gently running water for 15 minutes, or until dust particles are removed. Seek medical attention if irritation persists.

SKIN CONTACT: Flush contaminated area(s) with lukewarm, gently flowing water for 5 minutes, or until dust is removed. Remove contaminated clothing. Seek medical attention if irritation develops.

INHALATION: Remove victim to fresh air. If symptoms persist, obtain medical attention. If breathing has stopped, a trained person should perform artificial respiration. Get medical attention immediately.

INGESTION: Do not induce vomiting. If vomiting occurs naturally, have victim lean forward to avoid aspiration. Seek medical attention.

5. Fire Fighting Measures

Flash point:	Not available.
Autoignition temperature:	204°C (400°F)
Lower Flammability Limit:	40 g/m3 dust
Upper Flammability Limit:	Not applicable.
Sensitivity to Impact:	Not sensitive.
Sensitivity to Static Discharge:	Yes, if dust concentration exceeds the LEL (Lower Flammability Limit)

.

Hazardous Combustion Products: Thermal oxidative degradation of wood produces irritating and toxic smoke and gases. These include carbon monoxide, aldehydes, terpenes, carbon particulate, organic acids, and polycyclic and aromatic hydrocarbons.

Extinguishing Media: Water spray is an effective agent. Carbon dioxide and sand are also effective.

Fire Fighting Instructions: Wood dust poses a strong to severe explosion hazard in the presence of an ignition source. Particle size and water content are key parameters. Wood dusts may ignite at temperatures in excess of 204°C. Use water spray to wet wood dusts. Normal fire fighting procedures must be followed to avoid inhalation of smoke and gases and to reduce exposure to heat and flame.

6. Accidental Release Measures

Personal Protection: Wear appropriate personal protective equipment.

Environmental Precautions: Not applicable.

Cleanup Procedures: Vacuum dusts. Do not dry sweep. If sweeping is necessary, control dust with water. Do not use compressed air for clean-up.

7. Handling and Storage

Handling Procedures: Avoid generation of dusts. Use good housekeeping practices.

Storage: Avoid excessive heat, open flames, and other sources of ignition. Avoid contact with oxidizing agents.

8. Exposure Controls, Personal Protection

Engineering Controls: Use general and local exhaust ventilation to limit exposures below the exposure limits. These controls may be augmented by the use of process or personnel enclosures, control of process conditions, or by process modification. The presence of formaldehyde requires that exposures be kept as low as reasonably achievable.

Respiratory Protection: If respiratory protection is warranted, a NIOSH (National Institute for Occupational Safety and Health) approved respirator with an efficiency rating of N95 or higher must be used. (See 42 CFR 84). Use of these high efficiency respirators should minimize respiration of MDI, since these contaminants are bonded to the wood particles.

Skin Protection: It is good practice to limit skin contact. Wear coveralls or other suitable work clothes, protective leather or cotton gloves, and safety boots. Contaminated clothing should be laundered before reuse.

Eye and Face Protection: Eye protection is required. Chemical safety goggles are recommended. The wearing of contact lenses is not recommended.

Other: Have a safety shower and eye wash station readily available.

9. Physical and Chemical Properties

Appearance:	Wood paneling	**Melting Point:**	Not applicable.
Odour:	Slightly aromatic.	**Boiling Point:**	Not applicable.
pH:	Not applicable.	**Critical Temperature:**	Not applicable.
Vapour Pressure:	Extremely low.	**Relative Density:**	0.40 – 0.80
Solubility:	< 0.1% in water.	**Partition coefficient:**	Not available.
Vapour Density:	Various	**Evaporation Rate:**	Not applicable.

10. Stability and Reactivity

Chemical Stability: Product is stable.

Incompatibility: Avoid contact with strong acids, strong bases, flammables, oxidizers, and temperatures in excess of 200°C.

Hazardous Decomposition Products: Thermal oxidative degradation of wood produces irritating and toxic smoke and gases. These include carbon monoxide, aldehydes, terpenes, carbon particulate, organic acids, and polycyclic and aromatic hydrocarbons.

Hazardous Polymerization: Hazardous polymerization will not occur.

11. Toxicological Information

Acute Exposure:	No specific toxicological data is available. See Section 3
Chronic Exposure:	See Section 3.
Exposure Limits:	See Section 2.
Irritancy:	See Section 3.
Sensitization:	See Section 3.
Carcinogenicity:	See Section 3.
Teratogenicity:	Not reported.
Reproductive toxicity:	Not reported.
Mutagenicity:	Not reported.
Synergistic products:	None reported.

12. Ecological Information

Environmental toxicity: No data available.

Biodegradability: No data available.

13. Disposal Considerations

Canadian Environmental Protection Act: Not a hazardous waste as sold. Comply with all provincial and local regulations. Incineration or dry-land disposal is acceptable in most jurisdictions.

Resource Conservation and Recovery Act (RCRA): Not a United States Environmental Protection Agency (EPA) hazardous waste as sold. Comply with all state and local regulations. Incineration or dry-land disposal is acceptable in most jurisdictions.

14. Transport Information

Canadian Transportation of Dangerous Goods Regulations: Not Dangerous Goods.

United States Hazardous Materials Regulations (49 CFR): Not a Hazardous Material.

15. Regulatory Information

Canadian Federal Regulations:

Canadian Environmental Protection Act: Formaldehyde is listed on the Domestic Substances List.
WHMIS Classification: Wood Products are not Controlled Products.

United States Federal Regulations:

Toxic Substances Control Act: All ingredients are listed in the inventory.
OSHA: Not a Hazardous Substance under 29 CFR Section 1910, Subpart Z
CERCLA: Not a Hazardous Substance under 40 CFR Part 302
SARA 313: Not subject to the reporting requirements of 40 CFR Part 372
SARA 311/312 EPA Hazard Categories: Delayed (chronic) health, Immediate (acute) health.
SARA 302: No ingredients subject to 40 CFR Part 355.

16. Other Information

Initial Preparation Date: March 16, 2006

Prepared by: Kel-Ex Agencies Ltd. from information provided by
Tolko Industries Ltd. and the CCINFO Data Base

Revisions: None

HEALTH HAZARD DATA

Permissible Exposure Limit: None established.

Effects of Overexposure: May cause skin or eye irritation upon contact. Avoid breathing vapors. The dense vapors can displace and reduce breathing air in confined or unventilated spaces causing asphyxiation. Overexposure may cause tremors, confusion, irritation, and may result in cardiac sensitization.

First Aid Procedures

Eyes: Flush with water for at least 15 minutes. See a physician if irritation develops.
Skin: Wash with soap and water at first opportunity.
Inhalation: Move to fresh air if symptoms develop. If breathing is difficult, give oxygen and call physician.
Ingestion: Induce vomiting; get medical attention.

SPECIAL PROTECTION INFORMATION

Ventilation: Local exhaust ventilation is recommended when working with this product. Uses requiring heating and/or spraying may require more ventilation or personal protective equipment.

Respiratory Protection: The specific respirator selected must be based on contamination levels of this material found in the workplace and the working limits of the respirator. A supplied air, full-face mask, positive pressure or continuous flow respirator or a supplied air hood is required when airborne concentrations are unknown or exceed threshold limit values. A positive pressure, self contained breathing apparatus can be used in emergencies or other unusual situations. Full-face air purifying respirators equipped with organic vapor cartridges can be used in certain situations, ***see OSHA standard 29CFR 1910.134***. All equipment must be NIOSH approved and maintained.

Eye Protection: Goggles or chemical safety glasses.
Gloves: Chemically resistant rubber or plastic.
Other: Avoid eye and skin contact. Eye wash system and showers should be available.

SPILL OR LEAK PROCEDURES

Remove or extinguish ignition or combustion sources.
Contain spill. Absorb with sawdust, etc., and shovel into container. Waste material should be disposed of under conditions which meet federal, state, and local environmental regulations.
Wash area with detergent and water.

SPECIAL PRECAUTIONS

Store between 65°F and 85°F out of sunlight. Keep tightly sealed. Relieve pressure slowly when opening container.
R Component drums can be sent to drum reconditioners or disposed of as ordinary industrial waste in compliance with pertinent regulations.

CAUTION: Under no circumstances should empty drums be burned or cut open with an electric or gas torch.

CUSD2007

mechanical + plumbing

HYDRONIC COILS + HEAT EXCHANGERS

FANS

REGISTERS, GRILLS + DIFFUSERS

PUMPS

PHOTOVOLTAIC THERMAL COLLECTOR

WATER HEATERS

CONTROL VALVES

PIPING + PLUMBING SPECIALTIES

Hydronic Coils
& Heat Exchangers

WOLVERINE TUBE **W/H Trufin®**

Click here for printer friendly version.

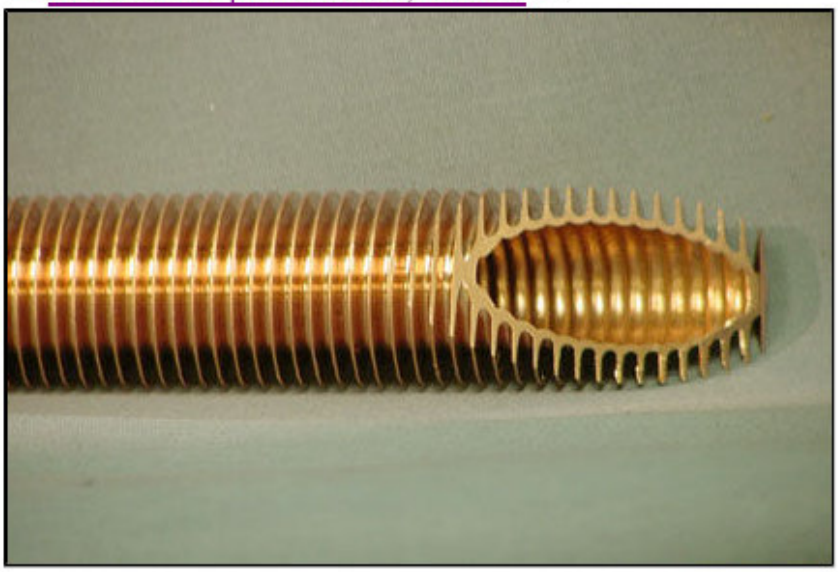

- **External Standards**
  This product is produced in alloy C12200 to meet the mechanical, chemical, and testing requirements of ASTM B75/B359 and in alloy C70600 to meet the mechanical, chemical, and testing requirements of ASTM B111/B359. For applications to the ASME pressure vessel code, the product will be produced to meet the requirements of ASME SB75/SB359 for alloy C12200 and to SB111/SB359 for alloy C70600. Other applicable standards - DIN 1787, DIN 17671, DIN 17664, and ADW 6/2 WD TUV 420/5.

- **Plain Sections**
  Plain ends and lands of 1" (25.4 mm) and over are standard. For plain ends and lands down to 5/8" (15.9 mm), contact the Wolverine Marketing Department. Spacing between lands of 18" (457.2 mm) and over is supplied as standard.

- **Lengths**
  Overall lengths, with power brush deburred ends, are supplied from 4' (1.219 m) to 60' (18.288 m) as standard. Overall lengths, with chamfered ends, can be supplied from 3' (0.914 m) to 28' (8.534 m) as standard lengths.

Designed for Heat Transfer

Type W/H Trufin is an integral finned tubing. It has 11 fins per inch and has a controlled inside diameter and an average wall thickness. It is designed for many diversified heat transfer applications, especially for tank less hot water heater usage since its controlled internal corrugation facilitates winding into the tight coils often needed for such heaters.

- **Temper**
  W/H Trufin is supplied as standard, in the "as finned" condition with plain ends and lands in the annealed condition. Material can be supplied in the annealed condition the entire length by special request.

Catalog Number	Weight Per Unit Length lb/ft (kg/m)	Plain End Outside Dia. inch (mm)	Plain End Wall inch (mm)	Min. Wall Under Fins inch (mm)	Nom. Root Diameter inch (mm)	Nom. Outside Surface Area ft^2/ft (m^2/m)	Surface Area Ratio Outside to Inside	Nom. ID Cross Sect. Area in^2 (mm^2)
UNS 12200								
66-114025	0.380 (0.565)	0.625 (15.88)	0.063 (1.60)	0.023 (0.584)	0.500 (12.70)	0.625 (15.88)	5.05	0.156 (100.6)
66-114028	0.396 (0.589)	0.625 (15.88)	0.063 (1.60)	0.026 (0.648)	0.500 (12.70)	0.581 (0.177)	5.05	0.152 (98.1)
66-114035	0.427 (0.635)	0.625 (15.88)	0.070 (1.78)	0.033 (0.826)	0.500 (12.70)	0.581 (0.177)	5.16	0.145 (93.5)

66-114040	0.446 (0.664)	0.625 (15.88)	0.072 (1.83)	0.037 (0.940)	0.500 (12.70)	0.581 (0.177)	5.28	0.139 (89.7)
66-115032	0.500 (0.744)	0.750 (19.05)	0.068 (1.73)	0.030 (0.749)	0.625 (15.88)	0.703 (0.214)	4.78	0.246 (158.7)
66-115040	0.555 (0.826)	0.750 (19.05)	0.072 (1.83)	0.037 (0.940)	0.625 (15.88)	0.703 (0.214)	4.92	0.233 (150.3)
66-116038	0.643 (0.957)	0.875 (22.23)	0.072 (1.83)	0.035 (0.889)	0.750 (19.05)	0.825 (0.251)	4.64	0.357 (230.3)
66-116046	0.729 (1.085)	0.875 (22.23)	0.083 (2.11)	0.043 (1.080)	0.750 (19.05)	0.825 (0.251)	4.80	0.337 (217.4)
UNS 70600								
66-114035	0.439 (0.653)	0.625 (15.88)	0.072 (1.83)	0.033 (0.826)	0.500 (12.70)	0.581 (0.177)	5.16	0.145 (93.5)
66-115040	0.579 (0.862)	0.750 (19.05)	0.075 (1.91)	0.037 (0.940)	0.625 (15.88)	0.703 (0.214)	4.92	0.233 (150.3)
66-116038	0.665 (0.990)	0.875 (22.23)	0.075 (1.91)	0.035 (0.889)	0.750 (19.05)	0.825 (0.251)	4.64	0.357 (230.3)
66-116044	0.724 (1.077)	0.875 (22.23)	0.083 (2.11)	0.041 (1.029)	0.750 (19.05)	0.825 (0.251)	4.77	0.342 (220.6)
66-116049	0.785 (1.168)	0.875 (22.23)	0.088 (2.24)	0.046 (1.156)	0.750 (19.05)	0.825 (0.251)	4.85	0.332 (214.2)
66-117049	0.920 (1.369)	1.000 (25.40)	0.088 (2.24)	0.046 (1.156)	0.875 (22.23)	0.930 (0.283)	4.58	0.472 (304.5)
66-118049	1.090 (1.622)	1.125 (28.58)	0.088 (2.24)	0.046 (1.156)	1.000 (25.40)	1.047 (0.319)	4.44	0.636 (410.3)

The minimum average fin height is 0.125 inch (3.175 mm).

WOLVERINE TUBE, INC.

Engineered products for heat transfer

Contact us at (256) 353-1310 or mkt@wlv.com

Rev. draft 08/01

FCU-1

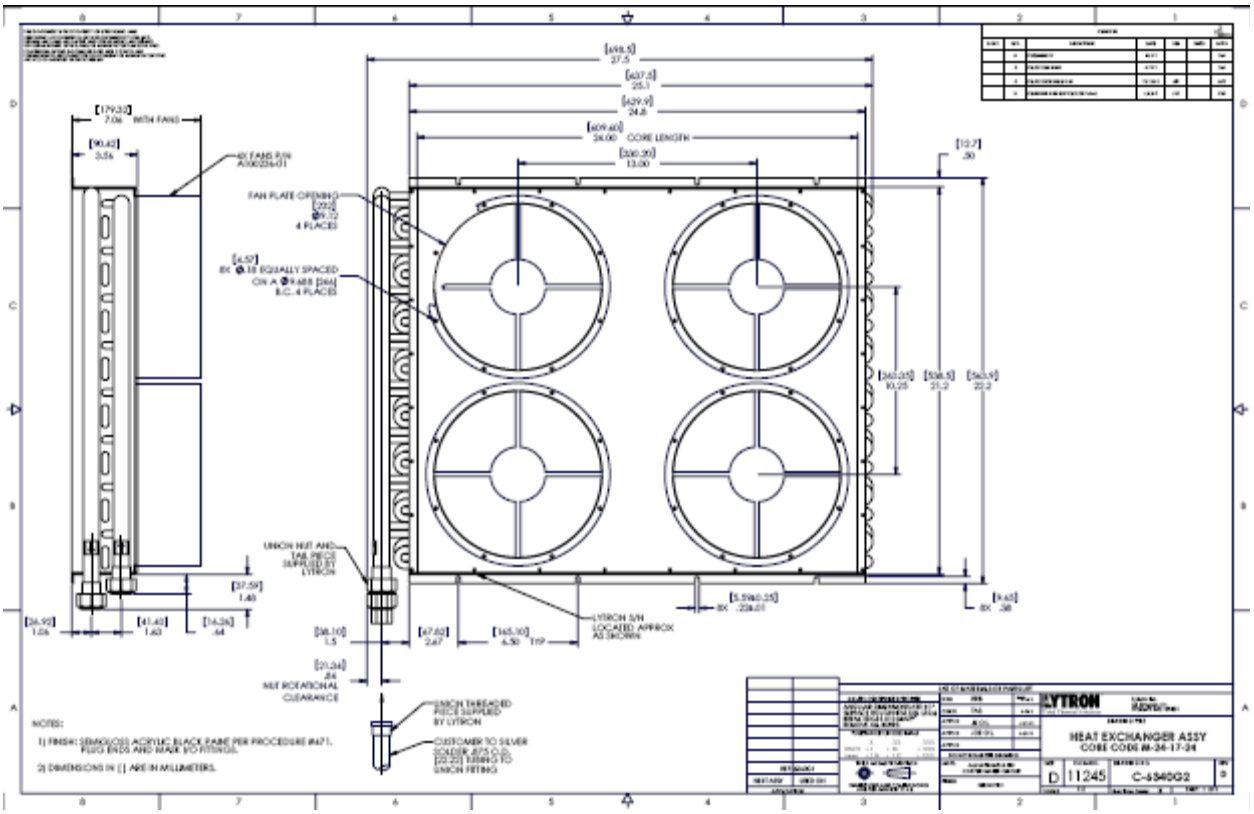
[698.5]
27.5
[637.5]
25.1
[629.9]
24.8
[609.60]
24.00 CORE LENGTH
[330.20]
13.00
[179.32]
7.06 WITH FANS
[90.42]
3.56
4X FANS P/N
A100226-01
FAN PLATE OPENING
[292]
Ø9.72
4 PLACES
[6.57]
8X Ø.18 EQUALLY SPACED
ON A Ø9.488 [DIA]
B.C., 4 PLACES
[13.7]
.50
[260.35]
10.25
[538.5]
21.2
[563.9]
22.2
UNION NUT AND
TAIL PIECE
SUPPLIED BY
LYTRON
[37.59]
1.48
[26.92]
1.06
[41.48]
1.63
[16.26]
.64
[38.10]
1.5
[67.62]
2.67
[165.10]
6.50 TYP
LYTRON S/N
LOCATED APPROX
AS SHOWN
[5.59±0.25]
8X .220±.01
[9.65]
8X .38
[21.24]
.84
NUT ROTATIONAL
CLEARANCE
UNION THREADED
PIECE SUPPLIED
BY LYTRON
CUSTOMER TO SILVER
SOLDER .875 O.D.
[22.22] TUBING TO
UNION FITTING
NOTES:
1) FINISH: SEMIKOLOSS ACRYLIC BLACK FAME PER PROCEDURE #471.
FLEX ENDS AND MASK TO FITTINGS.
2) DIMENSIONS IN [ ] ARE IN MILLIMETERS.
LYTRON
HEAT EXCHANGER ASSY
CORE CODE W-24-17-24
D
11245
C-6340G2
9

M05-050

M05-100

M10-080

M10-160

M14-120

M14-240

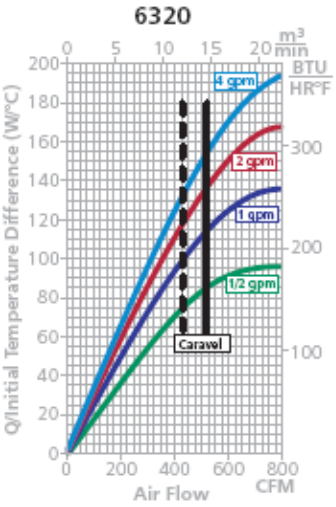

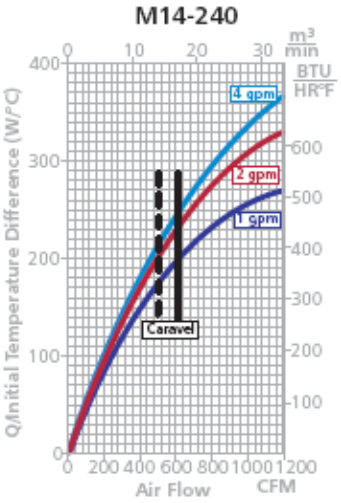

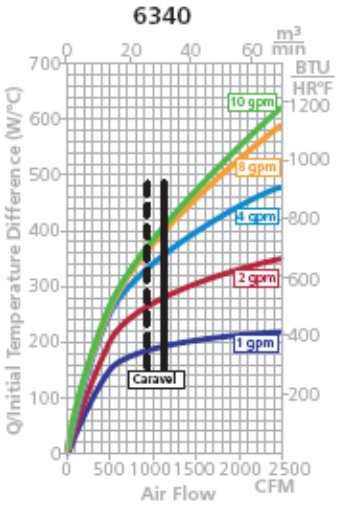

[1] *The solid vertical lines indicate the performance provided by our standard fans at 60 Hz and 20°C. Dashed fan lines represent fan performance at 50 Hz and 20°C.*

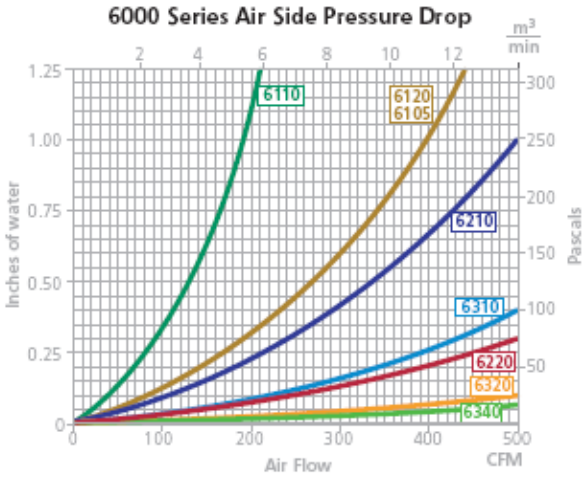

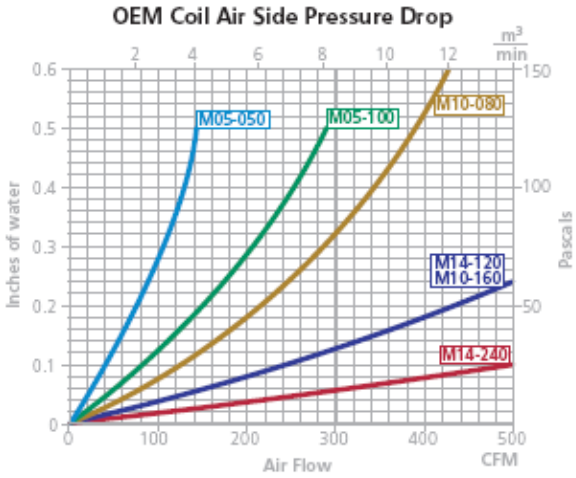

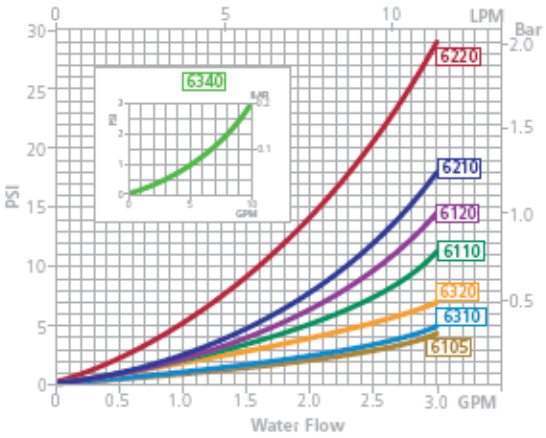

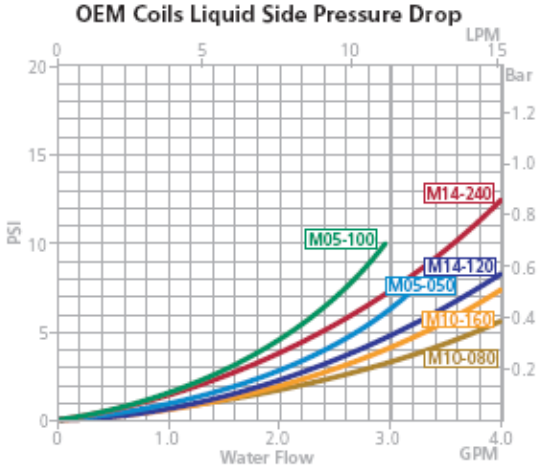

M05-050

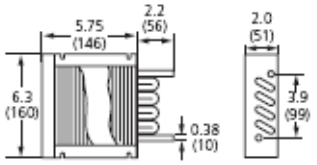

M05-100

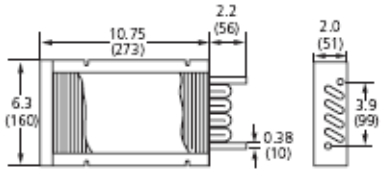

M10-080

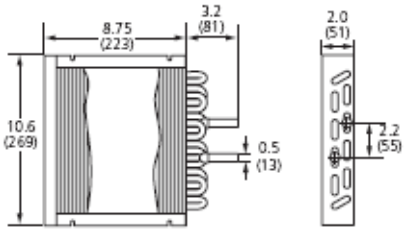

M10-160

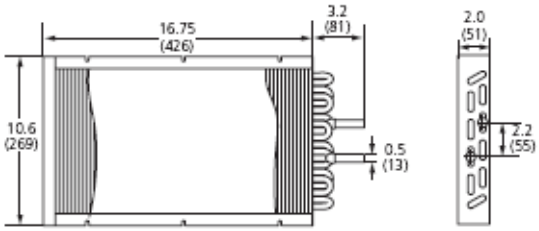

M14-120

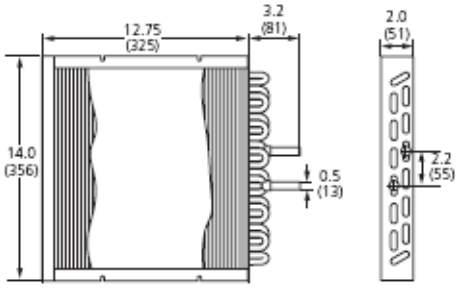

M14-240

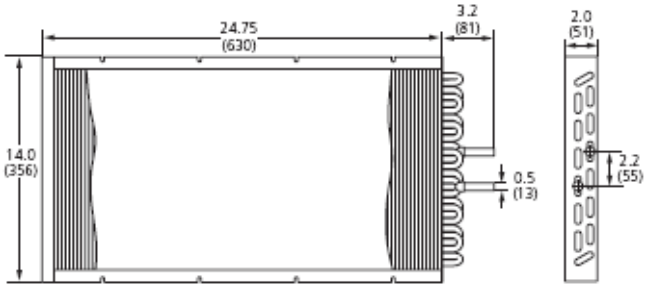

PDFs, IGS files, and eDrawings of standard heat exchangers are available at www.Lytron.com.
Main dimensional label is inches. Dimension in parentheses is mm.

OEM Coils

First select core number

OEM Coil Core Number		M05-050	M05-100	M10-080	M10-160	M14-120	M14-240
Fluid Path		copper					
Fin Material		aluminum					
Dry Weight	lbs	2.0	4.0	5.0	8.0	10.0	16.0
	kg	0.9	1.8	2.3	3.6	4.5	7.3
Fluid Volume	in³	7	11.5	19.5	33.5	37	66.5
	ml	115	188	320	549	606	1090
Max. operating temp.		400°F/200°C					

Next, select a fitting option

Fitting Options (see page 88)						
SB: stub end	•	•	•	•	•	•
BD: beaded fitting	•	•	•	•	•	•
AN: 37° AN flare	•	•	•	•	•	•

Add a fan plate if desired

Fan Plate						
0: no fan plate	•	•	•	•	•	•
1: fan plate attached	•	•	•	•	•	•

To arrive at a part number[1]

M05-100 SB 1 M05-100 with stub end fittings and fan plate

Finally, order fans if desired

Recommended Fans						
Muffin XL	•	•				
Patriot			•	•		
Falcon			•	•		
Caravel					•	•
# of fans	1	2	1	2	1	2

[1] *Note: fans, fan plugs and fingerguards must be ordered seperately. Assembly available on orders of 10+ pieces—ask for details.*

Fan Specifications

Description	Size	Voltage	Current 50Hz	Current 60Hz	Fan Part Number	Fingerguard Part Number	Fan Plug Number
Muffin XL	4.71″ (120 mm) square	115	0.20	0.18	102076	101467	101466
Muffin XL	4.71″ (120 mm) square	230	0.10	0.09	102076-01	101467	101466
Patriot	6.75″ (171.5 mm) round	115	0.27	0.26	101116-01	101116-03	101466
Patriot	6.75″ (171.5 mm) round	230	0.14	0.13	101116-02	101116-03	101466
Falcon	6.75″ (171.5 mm) round	115	0.48	0.50	102070-01	101116-03	101466
Falcon	6.75″ (171.5 mm) round	230	0.16	0.16	102070-02	101116-03	101466
Caravel	10.00″ (254 mm) round	115	0.48	0.50	100236-01	101434	101466
Caravel	10.00″ (254 mm) round	230	0.24	0.25	100236-02	101434	101466

Other Accessories

Item	Suitable for		Part Number
Push to connect adapters for • Materials: acetel bodies, nitrile o-rings and acetel/stainless steel collets • Temp. range: -14 to 167°F (-25 to 75°C) for air; 33 to 140°F (0 to 60°C) for water. • Maximum pressure: 150 psi (10.3 bar) for air, 250 psi (1,724 kP) for water. • Packaging: 10 fittings per pack.	M05-050 M05-100	Straight Union ⅜″ O.D.	430-0448
		Union Elbow ⅜″ tubing O.D.	102190-01
		Transition Union ⅜″ – ½″ tubing O.D.	102189-01
	M10-080 M10-160 M14-120 M14-240	Transition Union ½″ – ⅜″ tubing O.D.	102189-01
		Union Elbow ½″ tubing O.D.	102190-02
Tube to Hose Adapter Requires a push-to-connect adapter of the same OD to mate with heat exchanger.		⅜″ tubing O.D. to ⅜″ hose barb	102191-01
		½″ tubing O.D. to ⅜″ hose barb	102191-02
		½″ tubing O.D. to ½″ hose barb	102191-03

CRYOGEL

Ice Ball™ Thermal Storage

P.O. Box 910525 San Diego, CA 92191
Telephone: (858) 457-1837 Facsimile: (858) 457-3480
Email: tes@cryogel.com Web Site: www.cryogel.com

SYSTEM OPERATION AND DESCRIPTION

Cryogel Ice Balls are 4 inch (103mm) diameter spheres constructed of high-density polyethylene and filled with water to form ice for cool energy storage. Ice Balls are placed in storage tanks and are charged (frozen) and discharged (melted) by means of circulating a glycol based heat transfer fluid around the balls. During the charge mode (usually during off-peak hours at night), glycol is circulated through the Ice Balls in a storage tank and then out to a chiller where it is cooled to temperatures low enough to make ice. During the discharge mode, the same glycol solution is circulated through the Ice Balls in the storage tank. Ice Balls cool the glycol solution that is then pumped to the load to provide air conditioning or process cooling. (See typical schematics).

Cryogel Ice Balls are designed such that the expansion of freezing water inside each ball is accommodated by the outward motion of pre-formed dimples in the surface of each ball. During the melting of the ice, each ball returns to its approximate original shape. Ice Ball performance and durability to withstand changes in shape have been verified by independent laboratory testing.

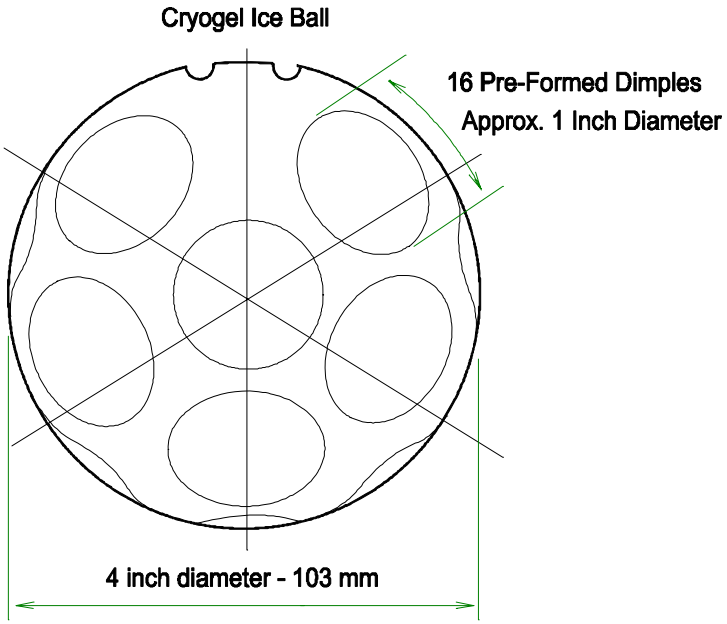

Ice Balls are constructed with a proprietary high performance polyethylene polymer. HDPE

As water inside the Ice Ball freezes to form ice, the dimples flex out to allow for expansion. Without the dimples, the life of the balls would be diminished due to stretching and stressing of the plastic walls.

Patents in the U.S. and other countries protect Cryogel technology.

ADVANTAGES OF THE CRYOGEL ICE BALL™ SYSTEM

SIMPLICITY EQUALS LOWER COSTS AND HIGHER RELIABILITY

1. SIMPLICITY

Like marbles in a coffee can, Ice Balls are placed in tanks and a standard glycol heat transfer solution is circulated around the balls to freeze them at night and to melt the balls and release the cool energy the following day. There are no heat exchanger tubes and fittings, air pumps or other moving parts associated with the storage tank. Installation consists of standard tank and piping installation followed by loading the Ice Balls into storage tanks. No special stacking of containers or installation of heat exchanger tubes is required. Installation and design are simplified because Cryogel systems require fewer tanks and less piping than systems based on *"ice-on-coil tank farm"* concepts. Flow balancing across tanks is also much simpler and less expensive with fewer tanks.

2. STORAGE TANK DESIGN FLEXIBILITY

- New or Existing Tanks
- Pressure Vessels - Steel
- Atmospheric Tanks - Concrete or Steel
- Cylindrical or Rectangular Tanks
- Direct Burial of Tanks with Live Load Above the Tanks.

3. CRYOGEL HAS ONE OF THE MOST COMPACT SYSTEMS ON THE MARKET

Pressurized Ice Ball systems require as little as 2.0 to 2.25 cubic feet of tank volume per ton hour and atmospheric systems require 2.5 to 2.7 cubic feet per ton hour. Tanks and tank foundations can be smaller and simpler with the Cryogel system. This translates to less expensive footings and better use of your space. Equipment pad fencing, lighting, plumbing and electrical costs may also be reduced.

4. MORE SURFACE AREA MEANS BETTER HEAT TRANSFER

Cryogel Ice Balls have **over 22 square feet of surface area per Nominal ton hour**. More surface area means better heat transfer and higher energy savings. More surface area means higher instantaneous discharge capacity at lower temperatures. More surface area also means lower energy consumption for making ice at night. Remember the formula, $\mathbf{Q=UA\Delta t}$. All ice storage systems are dependent upon the surface area (A) to transfer cool energy. Ice Balls or the tubes of an ice-on-coil system are little more than heat exchangers. By comparison, the surface areas of ice-on-coil systems range between 7.5 and 17 square feet per ton hour.

5. INDEPENDENT LABORATORY TESTING

To the best of our knowledge, Cryogel has the only product on the market with independent laboratory testing, demonstrating <u>both</u> thermal performance and durability.

6. CRYOGEL PROVIDES FREE COMPUTERIZED SYSTEM SIZING

This is a free service to engineers, contractors, building owners and utilities. Cryogel's sizing software incorporates data obtained directly from the independent laboratory testing. This data has been translated into charging and discharging curves, which are based upon standard sizing parameters commonly used in sizing heat exchangers, i.e. Log Mean Temperature Differential (LMTD). These curves remove the *"black box"* mystery from storage tank sizing by allowing engineers to see exactly how the system will perform throughout the cycle.

STORAGE TANK and SYSTEM DESIGN CONCEPTS

Flexibility of the Cryogel Ice Ball system allows the use of new or existing tanks; atmospheric steel or concrete tanks; pressurized tanks, vertical or horizontal tanks, above ground or below ground tanks and tanks that are indoors or outdoors. Tanks may be cylindrical or rectangular because, like marbles in a coffee can, the spherical Ice Balls conform to the shape of the tank.

Fluid distribution pipes are installed at the top and bottom of each tank to distribute glycol evenly across all the Ice Balls. The flow of glycol solution is from the bottom to the top of the tank during the charge and discharge modes. Piping in this manner allows the chillers to operate at the highest possible temperatures and, therefore, at the most efficient operating points during the charge mode. Cryogel sizes fluid distribution headers on the basis of maximum flow rates supplied by the project designer. The total pressure drop across each tank, including headers and Ice Balls, does not normally exceed 3.5 psig during the charge or discharge mode with a 25% glycol heat transfer solution.

Cryogel distribution header concepts together with the natural arrangement of the Ice Balls and the vertical flow patterns eliminate flow bypass issues that may be found in certain competitive equipment. Low velocity through the balls insures that pressure drop is minimal and, therefore, allows the use of both ethylene and propylene glycol heat transfer fluid.

For ALL thermal storage systems involving multiple tanks, the piping leading to and from storage tanks must be balanced with respect to flow and pressure drop. Multiple tank systems will not function properly if the tanks do not receive equal flow. Standard piping practices should be observed when piping tanks with special attention to reverse piping requirements, the placement of tanks on equal branches, etc. All storage tanks should have isolation valves on the inlet and outlet of each tank. Obviously, a system with one tank will need no tank balancing at all. A two-tank system will be easier and less costly to balance than a three-tank system and so forth. Many Cryogel systems use only one large tank, thereby avoiding the costs and problems associated with tank balancing.

ATMOSPHERIC TANK OPTION

Atmospheric storage tanks may be rectangular or cylindrical; horizontal or vertical, and may be constructed of steel or concrete. Atmospheric tanks include a *"free board"* volume at the top to prevent overflow. Atmospheric vessels *"breath"* as air is displaced or returned as function of the glycol solution level above an Ice Ball hold-down grid. The hold-down grid is constructed of Fiberglas, aluminum or epoxy coated steel. The grid is placed inside the tank above the upper distribution header to prevent Ice balls from floating above the liquid surface and to prevent movement of the balls as the fluid rises and falls during charging and discharging. A polyethylene liner must be installed inside concrete tanks to prevent leakage. The interior walls of steel atmospheric tanks typically have an epoxy coating to prevent oxidation. All liners and coatings must be compatible with the glycol heat transfer fluid.

CU
507

PLASTIC-MART.com

Lowest Prices Guaranteed!

Please Call toll free 866-310-2556

Home | About Us | Products | Custom | Contact Us | General Info | View Cart

Search Our Site► SEARCH

Live chat by LivePerson

Marine Water / Waste Tanks

- ► COMPLETE LIST HERE

RV Replacement Tanks

- ► Fresh Water Tanks*click here*
- ► Black/Grey Holding Tanks*click here*

Below Ground Water / Waste Tanks

- ► Septic (Waste) Tanks
- ► Cistern (Water) Tanks
- ► HD BRUISER TANKS

Above Ground Tanks

- ► Vertical Water Tanks (Green/Black)
- ► Vertical Tanks
  - INDUSTRIAL TANKS
- ► Cone Bottom Tanks & Stands (Biodiesel Production)
- ► Horizontal & Elliptical Leg Tanks
- ► Cradle Tanks
- ► Rectangular Plastic Tanks
- ► Flat Bottom Utility Tanks
- ► Low Profile Hauling Tanks
- ► OIL TANKS (Used Oil Only)
- ► Double Wall Storage Tanks
- ► Containment Basins
- ► Containment Trays
- ► Drum Spill Pallets & Containment
- ► Pick Up Truck Tanks
- ► ***PRESSURE WASHER TANKS*** (auto detail industry)
- ► Doorway Tanks (29" wide)
- ► Fully Draining Tanks
- ► Stock Tubs
- ► Open Top Tanks **PE & PP**(Chemical Plating Tanks)
- ► Brine Tanks
- ► PALLET TANKS (forkliftable)
- ► PCO Tanks
- ► IBCs (FORKLIFTABLE)
- ► Small Sprayer Tanks

Above Ground Tanks => Vertical Tanks

259.00 (click here for details)

Part Number:	VT0425
Capacity:	425 gallons
Size:	42" dia. x 75"H
USD Price:	259.00
USD Shipping:	CALL FOR PRICING

** Oversized item. Shipping will be billed separately.
Contact Us for a quote.

Add To Cart

Includes:

8" Vented Lid (off center)

2" Fitting
(3) Tie Down Lugs

*full compliance with current FDA standards for polyethylene tanks

Comes in Natural White

100 lbs.

Available in Green or Black (2-3week lead time)

2.0 s.g.

CALL 866 310 2556 FOR SHIPPING RATES

CU
507

Fans

tel: (781)-933-7300
fax: (781)-935-4529

STANDARD PRODUCTS : Fans

Caravel®

Tubeaxial Fan

FEATURES:

- Size: 10.0" x 3.50" deep (254mm x 89mm)
- Air Flow: 550 CFM
- Voltage: 115 & 230 VAC (50/60 Hz)
- Operating Temperature Range: -10°C to +70°C
- Storage Temperature Range: -40°C to +85°C
- Ball Bearings
- Terminals
- Weight: 4.4 Lbs. (2.0 Kg)

PERFORMANCE:

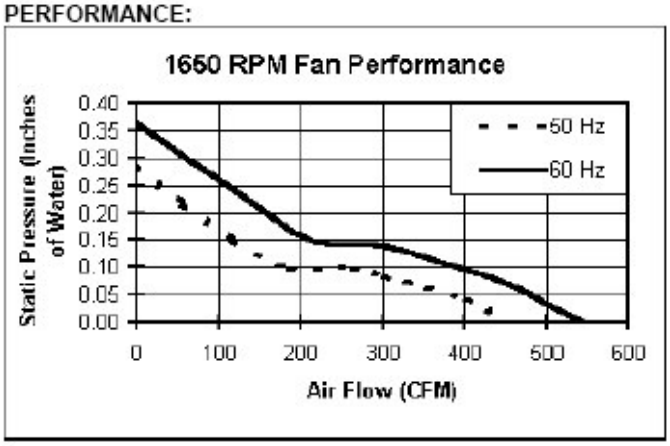

SPECIFICATIONS:

Model	Part No.	Nominal Voltage (VAC)	Frequency (Hz)	Power Input (Watts)	Running Current (Amps)	Locked Rotor Current (Amps)	Speed (RPM)	Air Flow (CFM)	Sound Pressure Level (dBA)
Caravel	100236-01	115	50/60	67	0.480/0.500	1.3	1400/1650	455/550	45.4/49.2
Caravel	100236-01	230	50/60	34	0.240/0.250	0.330	1400/1650	455/440	45.4/49.2

Click here to view diagram - Caravel.pdf

MOTOR:

- Two-Pole Permanent Split Capacitor Motor, Single Phase
- Capacitor - Dry Polyester Film
- Insulation Class B
- Ball Bearings
- Impedance Protected
- 100% Dielectric Tested

CONSTRUCTION:

- Venturi - Single Piece Die Cast Aluminum, Black
- Propeller - Polycarbonate, Black, UL94V-0

LIFE EXPECTANCY:

OVERVIEW
APPLICATIONS
COLD PLATES
COOLING SYSTEMS
HEAT EXCHANGERS
Overview
6000 Series—Copper Heat Exchangers
OEM Coils—Copper Heat Exchangers
Aspen™ Series—Stainless Steel Heat Exchangers
4000 Series—Stainless Steel Heat Exchangers
Aluminum Oil Coolers
Plate-Fin Heat Exchangers —Vacuum Brazed
Liquid-to-Liquid Brazed Plate
Custom Heat Exchangers
ORDERING
Download Lytron's Catalog
Sign up for newsletter

tel: (781)-933-7300
fax: (781)-935-4529

STANDARD PRODUCTS : Fans

Muffin® XL

Tubeaxial Fan

FEATURES:

- Size: 4.69" sq. x 1.54" deep (120mm x 38mm)
- Air Flow: 105 to 115 CFM
- Voltage: 115 & 230 VAC
- Operating Temperature Range: -10°C to +70°C
- Storage Temperature Range: -40°C to +85°C
- Ball Bearings
- Terminals
- Weight: 21 oz (.61 Kg)

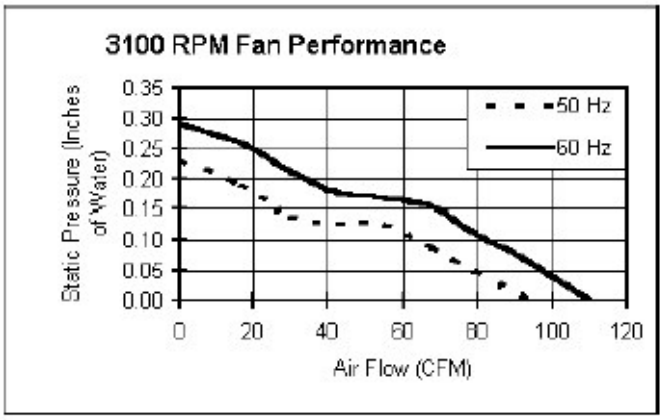

Specifications

Model	Part No.	Nominal Voltage (VAC)	Frequency (Hz)	Power Input (Watts)	Running Current (Amps)	Locked Rotor Current (Amps)	Speed (RPM)	Air Flow (CFM)	Sound Pressure Level (dBA)
Muffin XL	102076	115	50/60	17/15	.20/.18	.28/.27	2700/3100	92/108	43.8/47.9
Muffin XL	102076-01	230	50/60	17/16	.10/.09	.145/.140	2700/3100	92/108	43.8/47.9

Click here to view diagram - MuffinXL.pdf

MOTOR:

- Two-Pole Shaded Pole Induction Motor
- Impedance Protected
- 100% Dielectric Tested

CONSTRUCTION:

- Venutri - Zinc Alloy, Black
- Propeller - Polypropylene, Black, UL94V-0

LIFE EXPECTANCY:

- L10 Data - 85,000 hrs., @40°C

FRD SERIES

INLINE CENTRIFUGAL FAN

Features

- 100% Speed Controllable
- Air Flows up to 2432 cfm
- Rectangular Duct Connections
- External rotor motor, class B insulation. Sufficient service factor provided to ensure long and maintenance free operation over maximum load conditions.
- Automatic Reset Thermal Overload Protection
- Self lubricating/sealed for life precision ball bearings
- Capable of operation in air stream temperatures up to 140°F.
- Galvanized steel housing
- Terminal box with prewired electrical strip
- True airfoil backward curved impeller
- ***Three Year Warranty***

Description

A compact series of centrifugal type exhaust/supply fans specifically designed for installations where space is limited. FRD Series fan housing design allows for installation directly within rectangular duct work without the need for large elbows or transitional sections. The FRD Series fans feature a hinged door to which the motor is mounted. This door simply "swings out" of the housing to provide service access. Fans can be mounted at any angle in any point along the duct work. All fans utilize a non overloading backward inclined wheel. Because the wheels will allow lint to pass through the blades, FRD Series fans are suited for use as duct booster fans in commercial dryer venting applications. Motors are capable of operating in air stream temperatures of up to 140°F. All of the FRD fans are 100% speed controllable through voltage reduction allowing for precision balancing of systems. ***All FRD Series fans are backed by Fantech's Three Year Warranty.***

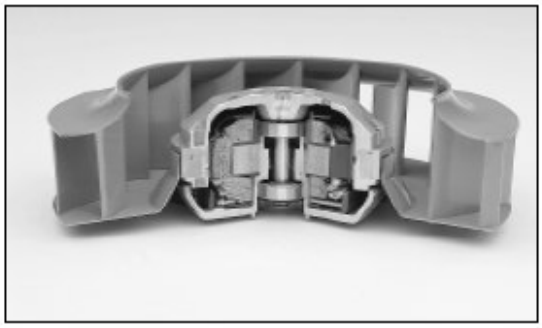

All FRD Series fans are powered by an external rotor motorized impeller. This design provides excellent heat dissipation even at low rpm. All of the FRD Series fans are 100% speed controllable through voltage reduction allowing for precision balancing of systems. Units can be provided with 115/1/60 or 208-230/1/60.

Typical Specifications for Model FRD Inline Duct Fans

Supply, exhaust or return air inline fans shall be of the centrifugal, direct driven type.

Construction

Fan housing shall be constructed of heavy gauge galvanized steel. Fan housing design shall allow installation connections directly to or within rectangular duct work. Fan housing shall include a hinged door on which the motor is mounted in order to permit service access to the motor without removing the fan from the duct work. Fans shall be supplied with an electrical terminal box and pre-wired terminal strip connections. Integral disconnect switch shall be provided when specified.

Motorized impeller shall be a totally enclosed external rotor type, Class B insulation. Motor shall be permanent split capacitor type. Motor shall be a permanently sealed self lubricating ball bearing type. Motor shall be equipped with automatic reset thermal overload protection. Motor shall be acceptable for continuous duty. Sufficient service factor shall be provided to ensure long maintenance free operation over maximum load conditions.

Fan wheel shall be of the backward inclined airfoil type with a well designed inlet venturi for maximum performance. Impellers shall be constructed of polyamid PA66 or galvanized steel. Motorized impeller shall be both statically and dynamically balanced as one integral unit to provide for vibration free performance.

Performance

Fan performance shall be based on tests conducted in accordance with AMCA Standard 210 and AMCA Standard 300 and shall be licensed to bear the AMCA Certified Ratings label.

Code Approval

Fan shall be tested and approved by UL and CSA (or equals) for safety. FRD Series shall be manufactured under the authority of Fantech, Inc., Sarasota, FL.

Performance Data

Air Performance Data

FRD air performance data has been presented at three voltages representing a percentage of full line voltage. Additional performance can be interpolated between the charted test points and achieved using a variable voltage control. For additional assistance determining fan operation at intermediate voltages/rpm, please contact Fantech's engineering department.

Sound Data

Sound data is presented in eight full octave bands as fan inlet sound power - L_{wi}, dB; total fan inlet sound power L_{wi}, dB(A); and in fan inlet sone levels. Silencers for additional attenuation of sound transmitted into the duct are available.

FRD12-6

View from Discharge

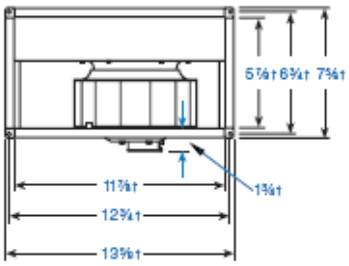

All dimensions in inches.

Side View

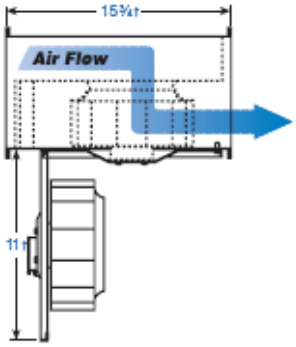

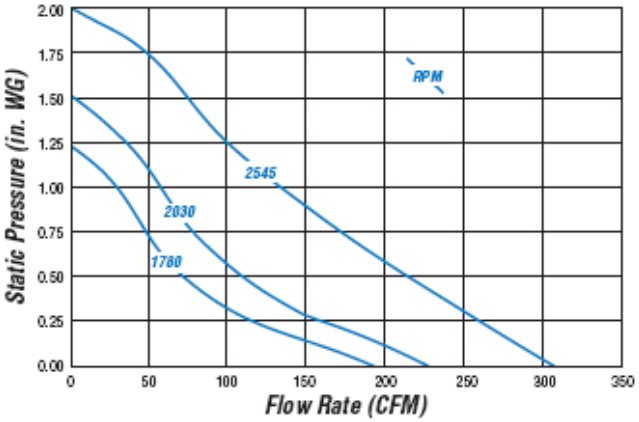

Unit Specifications:

Housing Metal Thickness - 16 Gauge
Approximate Weight - 18 lbs.
Nominal Hp - 0.10 Hp

Outlet Velocity (fpm) = CFM x 2.086
Tip Speed (fpm) = RPM x 1.958

Air Performance Data

Volts	Nom. RPM	Max. Watts	Max. Amps	Static Pressure in Inches W.G.									
				0.0"	.125"	.25"	.375"	.50"	.625"	.75"	1.0"	1.25"	1.50"
75	1780	41	0.52	193	155	116	92	73	60	48	29	—	—
85	2030	52	0.59	230	198	162	129	109	92	77	56	35	—
115	2545	85	0.74	309	287	262	238	214	192	171	133	101	75

Speed (RPM) shown in nominal. Performance is based on actual speed of test. Performance ratings do not include the effects of appurtenances in the airstream. Performance shown is for installation type D: ducted inlet, ducted outlet.
Note: Electrical specifications reflect voltage/phase/cycles for stock delivery motor/fans sets. Alternative motors are available. Please consult factory for electrical specifications and delivery on alternative motor voltages - i.e. 208-230/1/60.

Sound Data

Volts	Nom. RPM	SP	Sound Power re 10^{-12} Watts, Octave Bands, Hz								L_{wi} dB(A)	†Sones
			63	125	250	500	1000	2000	4000	8000		
75	1780	0.250	66	62	63	56	47	44	40	37	58	4.4
		0.375	67	64	64	55	46	42	38	31	57	4.5
85	2030	0.250	70	65	67	61	53	50	46	47	63	6.0
		0.375	70	66	66	59	50	48	43	41	61	5.5
		0.500	71	67	67	59	50	48	42	38	62	5.7
115	2545	0.500	75	70	71	65	59	56	51	50	67	8.0
		0.750	75	71	72	65	57	54	49	48	67	8.0
		1.000	75	72	74	66	57	55	50	48	68	8.5
		1.250	75	74	74	68	60	57	52	50	70	9.2
		1.500	74	75	75	70	62	58	54	52	71	9.9

The sound power level ratings shown are in decibels, referred to 10^{-12} watts calculated per AMCA Standard 301. Values shown are for inlet L_{wi} and total inlet L_{wi}A sound power levels for installation type D: ducted inlet, ducted outlet. Ratings do not include the effect of duct end correction.

† The sound ratings are loudness values in fan sones at 5ft. (1.5m) from the test inlet duct in a hemispherical free field calculated per AMCA Standard 301. Values shown are for installation Type D: ducted inlet fan sone levels. Ratings do not include the effect of duct end correction.

Fantech, Inc. certifies that the FRD Series shown herein is licensed to bear the AMCA Seal. The ratings shown are based on tests and procedures performed in accordance with AMCA Publication 211 and AMCA Publication 311 and comply with the requirements of the AMCA Certified Ratings Program.

Speed Control Options

1∿ Variable SCR Controls			1∿ Proportional Output Control	1∿ Transformers 115/208-230V	
Demand Adjusted		Field Balanced			
115V	208-230V	115/208-230V	115/208-230V	6 Step	Variable
RPE 5	WC 25	706-123S	706-123BVmA	STW 3	1520CT

FR Series Fans - Specifications

Dimensional Data

Model	*A1	A2	C	D	E	F
FR 100	4	5	9 1/2	6 1/8	7/8	7/8
FR 110	4	5	9 1/2	6 1/8	7/8	7/8
FR 125	-	5	9 1/2	6 1/8	7/8	-
FR 140	6	6 1/4	11 3/4	5 7/8	1	7/8
FR 150	6	6 1/4	11 3/4	5 7/8	1	7/8
FR 160	6	6 1/4	11 3/4	6 3/8	1	7/8
FR 200	8	10	13 1/4	6 1/4	1 1/2	1 1/2
FR 225	8	10	13 1/4	6 1/4	1 1/2	1 1/2
FR 250	-	10	13 1/4	6 1/4	1 1/2	-

All dimensions in inches.
**) Duct connections are 1/8" smaller than duct size.*

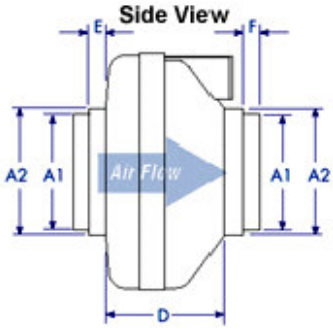

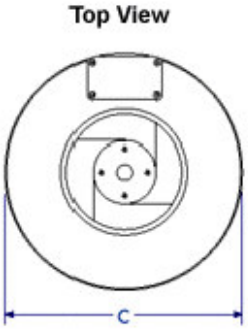

Air Performance Graphs

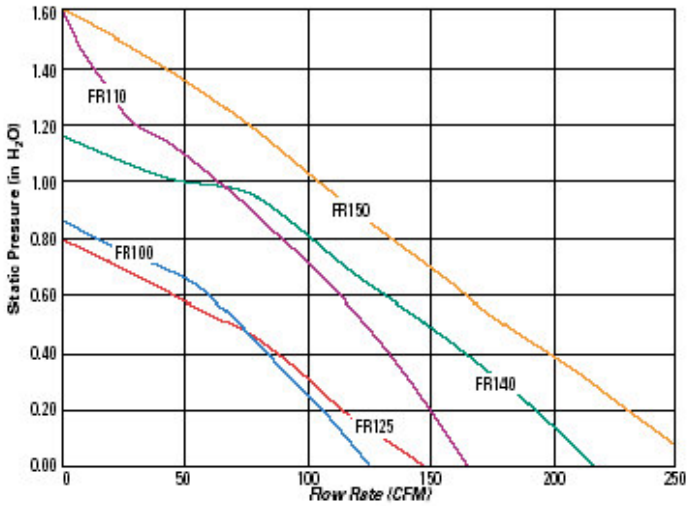

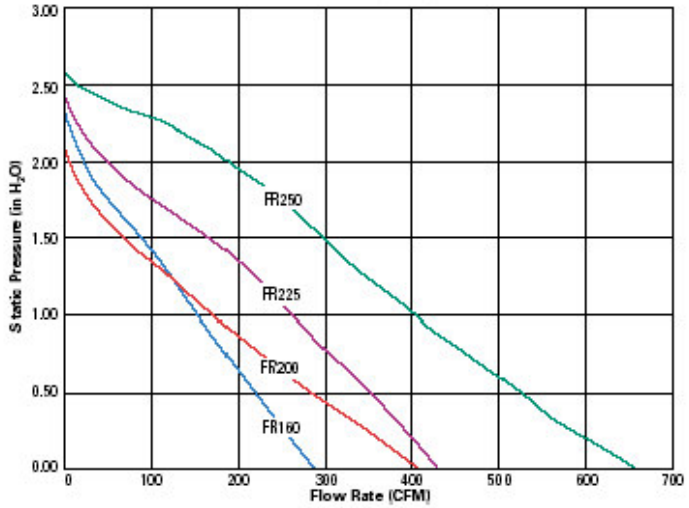

Performance Data

Fan Model	Energy Star	RPM	Volts	Rated Watts	Wattage Range	Max. Amps	0"	.2"	.4"	.6"	.8"	1.0"	1.5"	Max. Ps	Duct Dia.
FR 100	V	2900	115	19	13-19	0.18	122	100	78	55	15	-	-	0.87"	4"
FR 110	-	2900	115	80	62-80	0.72	167	150	133	113	88	63	4	1.60"	4"
FR 125	V	2950	115	18	15-18	0.18	148	120	88	47	-	-	-	0.79"	5"
FR 140	V	2850	115	61	47-62	0.53	214	190	162	132	99	46	-	1.15"	6"
FR 150	V	2700	115	71	54-72	0.67	263	230	198	167	136	106	17	1.58"	6"
FR 160	-	2750	115	129	103-130	1.14	289	260	233	206	179	154	89	2.32"	6"
FR 200	V	2750	115	122	106-128	1.11	408	360	308	259	213	173	72	2.14"	8"
FR 225	V	3100	115	137	111-152	1.35	429	400	366	332	297	260	168	2.48"	8"
FR 250	-	2850	115	241	146-248	2.40	649	600	553	506	454	403	294	2.58"	10"

FR Series performance is shown with ducted outlet. Per HVI's Certified Ratings Program, charted air been derated by a factor based on actual test results and the certified rate at .2 inches WG.

Static Pressure in Inches W.G

Registers, Grilles, Diffusers

Diffuser A

CU 516

AIRCONCEPTS

Submittal Sheet

Aluminum Punkah Louver

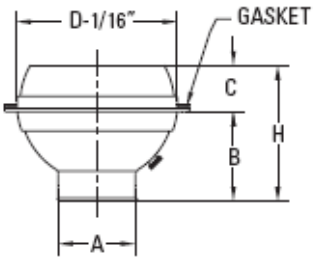

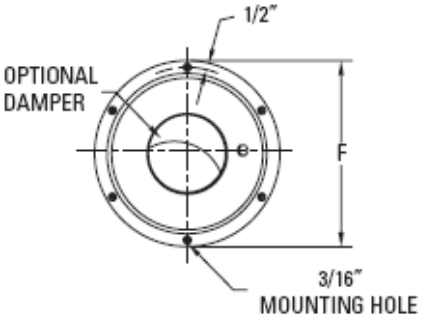

HIGH VELOCITY TASK AIR OUTLET
- Low Noise Levels
- Low Pressure Requirements

ADJUSTABILITY
- Easy Finger Tip Adjustment
- Directional Air Pattern Control:
  70 Degree Global Rotation Minimum
  ±35 Degree Deflection
  360 Degree Rotation

MODEL	SIZE	A	B	C	D	F	H	Mtg Holes
APL-04/04A	4	2	2-9/16	3/4	4	6	3-5/16	3
APL-06/06A	6	3	3-1/16	1-7/16	6	8	4-1/2	4
APL-08/08A	8	4-3/8	4-1/4	1-3/4	8	10	6	4
APL-10/10A	10	5-3/4	5-1/2	2-7/8	10	12	8-3/8	6
APL-12/12A	12	7-3/8	6	3	12	14	9	6
APL-14/14A	14	8-5/8	7-1/8	4-1/8	14	16	11-1/4	6
APL-16/16A	16	9-3/4	8-1/4	4-3/4	16	18	13	6
APL-18/18A	18	10-1/2	9-1/2	4-1/4	18	20	13-3/4	8
APL-20/20A	20	12-3/8	10-7/8	4-7/8	20	22	15-3/4	8

Inches measured to the nearest 1/16 inch

STANDARD FINISH:
- ☐ #10 Clear Anodized
- ☐ #42 Gloss Black Powder Coat
- ☐ #52 White Powder Coat
- ☐ #72 Silver Metallic Powder Coat
- ☐ #00 Mill Aluminum

OPTIONS:
- ☐ Aperture Damper
- ☐ Custom Finish _____

MATERIAL:
- Aluminum
- Stainless Steel Damper Hardware
- Foam Gasket

NOTES:
- Mounting Screws Included
- "A" in Model Name Designates Aperture Damper Required

Project:		**APL Series** Aluminum Punkah Louver
Architect:		
Engineer:		
Contractor:		Form No: 20010S
Submitted By:	Date:	Drawn By: MH January 2005

Diffuser B

CU 517

CARNES

STANDARD DIMENSIONS
(Metric on Reverse Side)

SPECIFICATION SHEET

MODELS CCNB and CCPB CURTAINAIRE EXTRUDED ALUMINUM LINEAR REGISTERS & GRILLES

Sill Application (1/4" Bars on 1/2" Centers)

CARNES COMPANY, 448 S. Main St., P. O. Box 930040, Verona, WI. 53593-0040 Phone: 608/845-6411 Fax: 608/845-6470

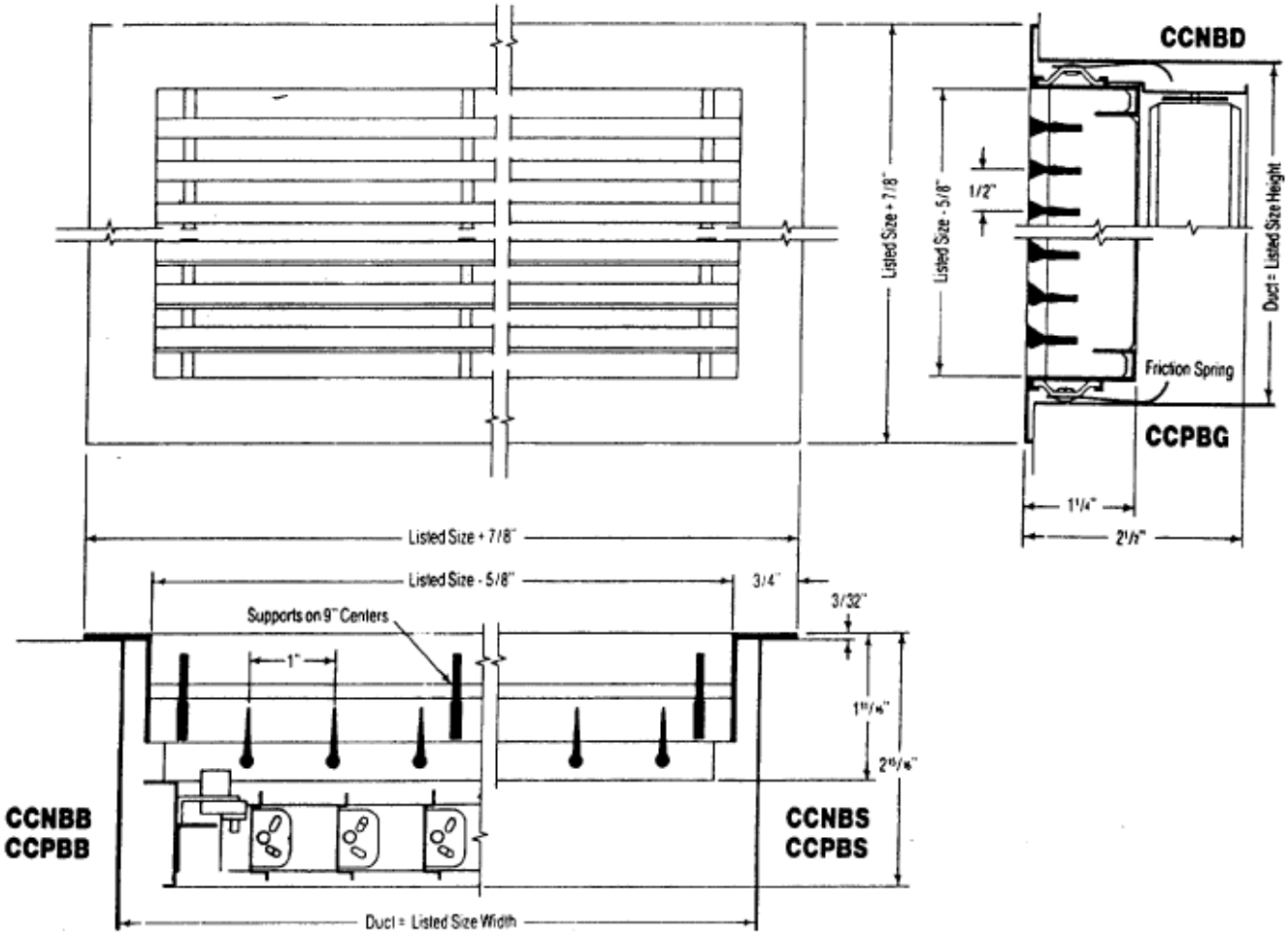

Model	Degree Blade Deflection	Damper	Straightening Vanes	Available Sizes* Listed Size Height Min.	Listed Size Height Max.	Listed Size Width Min.	Listed Size Width Max.
CCNBG	0	NO	NO	2	12	6	72
CCPBG	15	NO	NO	2	12	6	72
CCNBD	0	YES	NO	2	12	6	72
CCPBD	15	YES	NO	2	12	6	72
CCNBS	0	NO	YES	2	12	6	72
CCPBS	15	NO	YES	2	12	6	72
CCNBB	0	YES	YES	2	12	6	72
CCPBB	15	YES	YES	2	12	6	72

**Minimum & Maximum single unit sizes. Larger list widths furnished as separate pieces.*

NOTES:
1. Single blade damper on Size 2".
2. Opposed blade damper on Size 2½" and larger.
3. All ducts by others.
4. Standard finish # 26 sanded, etch and lacquer.

 (61) | SUPERSEDES 12100 | 12100-A [S]

CU 517

Pumps

P-1, P-4

WILO Stratos Submittal

Stratos 1.25 x 3-35

CU 519

Pumpen Intelligenz.

Project:	
Engineer:	
Contractor:	
Submitted By:	Date:
Approved By:	Date:

Tag #	Model #	Flow	Head	Volt/Phase	Control	IF Module	Comments
	Stratos 1.25 x 3-35			230/1/60			

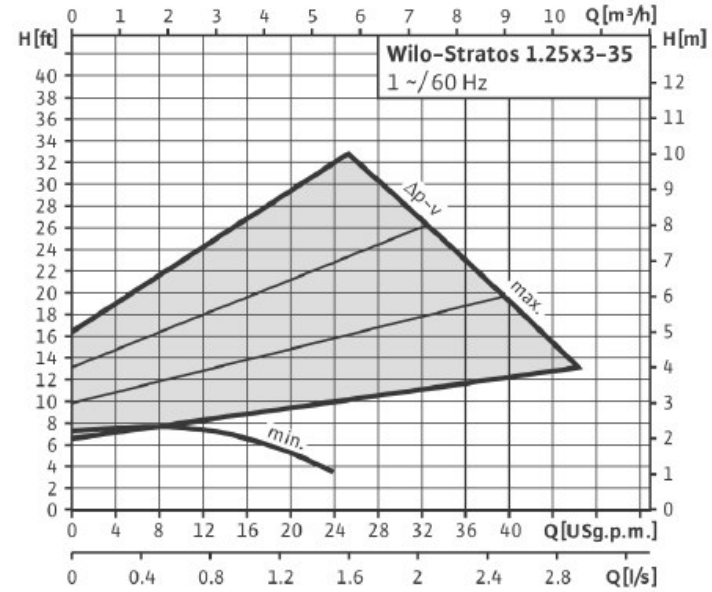

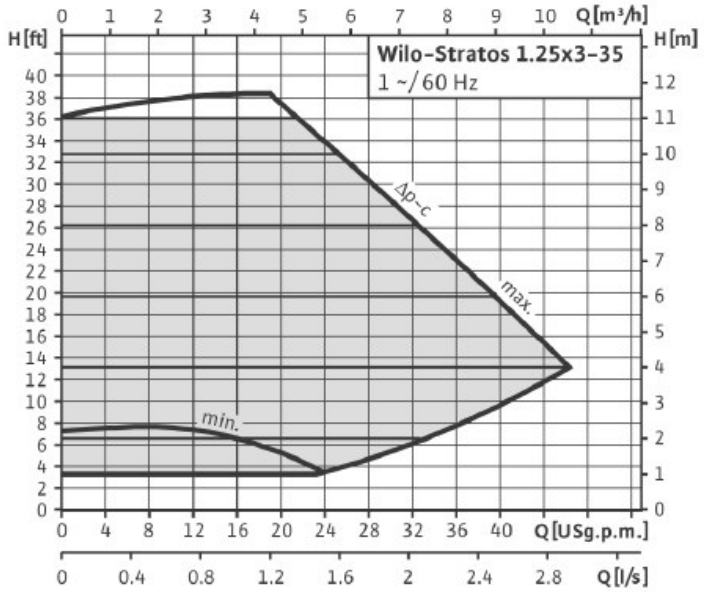

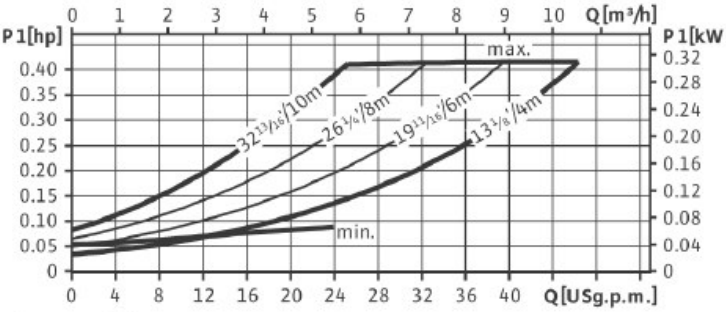

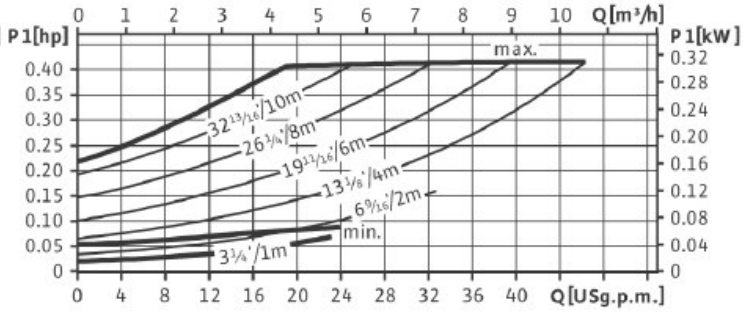

Control Modes

- ☐ △p-v Pressure Differential Variable - factory default setting (set pressure head double at maximum speed vs zero flow head)
- ☐ △p-c Pressure Differential Constant (set pressure constant)
- ☐ △p-t Temperature Influenced Differential Pressure Control (IR Device Required)
- ☐ Automatic Night Set Back Activated - factory default setting
- ☐ Manual Speed Control (RPM x 100)

IF Interface Modules (optional)

- ☐ External Off/SBM Run Signal - 0 to 10 Volt DC input remotely controls head set point or pump speed - includes dual pump feature
  - External Off (control override) remote, volt free n/c contact,
  - Run Signal, volt free n/o contact
- ☐ External Min - 0 to 10 Volt DC input remotely controls head set point or pump speed - Includes dual pump feature
  - External Min (control override) remote, volt free n/c contact

WILO Stratos Submittal

Stratos 1.25 x 3-35

WILO
Pumpen Intelligenz.

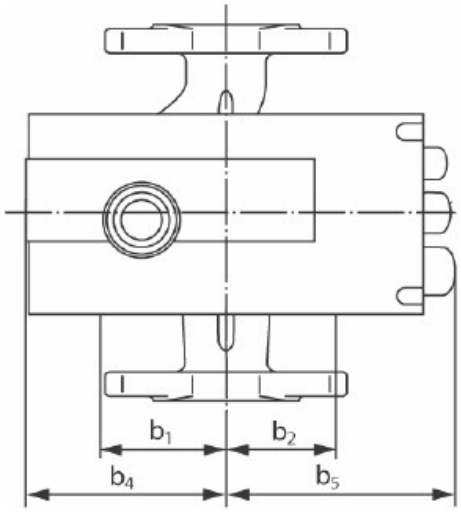

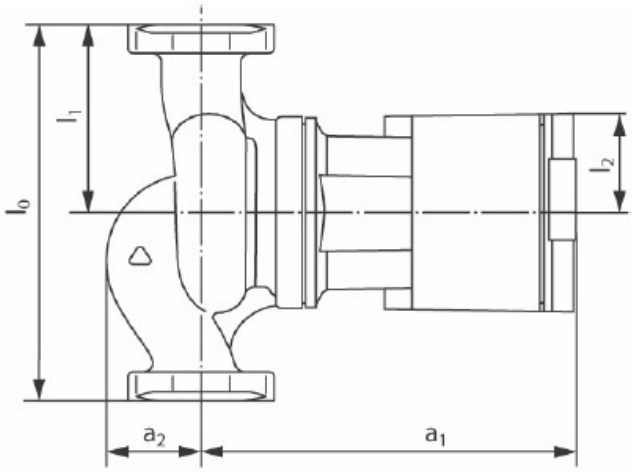

Pump Dimensions

Details	Max Hp	Pipe Size	l_0	l_1	l_2	a_1	a_2	b_1	b_2	b_4	b_5	Weight
Imperial	1/4 Hp	1 1/4"	8 1/2	4 1/4	2 3/16	7 7/8	1 15/16	2 3/8	2 3/16	4 3/16	4 3/4	19.8 lbs
Metric	200 Watt	32 mm	216	108	55	201	50	61	55	106	120	9.0 kg

Flange Dimensions

Details	Flange	D	d1 (dia)	d2	k (dia)	n x d_L
Imperial	1 1/4	4 3/4	1 3/8	2 7/8	3 1/2	2 x 1/2
Metric	32 mm	121	35	73	89	2 x 14

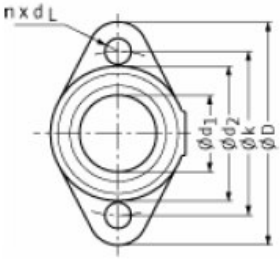

Electrical Information

Rated Power (P2) Hp max	Rated Power (P2) Watts max	Speed Range	Consumed Power (P1) watts min/max	Amps 230/1 (and 230/3)	Motor Protection
0.268	200	1600 - 4800	16 - 310	0.16 - 1.37	Integrated

Minimum Inlet Pressure

122 deg F (50 C)	203 deg F (95 C)	230 deg F (110 C)
4.4 PSI	14.5 PSI	23.2 PSI

Operating Limits

Temp Min/Max	14 to 230 Deg F (- 10 to +110 Deg C)
Max Ambient Temp	104 Deg F (40 Deg C)
Max Working Press	145 PSI (10 Bar)

Materials of Construction

Impeller	Polypropylene (50% Glass Filled)
Shaft	Stainless Steel (X40 Cr13)
Bearing	Metal Impregnated Carbon
Volute	Cast Iron, Cataphoresis Coated

Motor/Electronics

Power Electronics	Frequency Converter
Degree of Protection	Enclosure 2
Insulation Class	H

Approval Stamp Here

Wilo USA LLC
1290 North 25th Avenue
Melrose Park, Illinois 60160
Phone: 866 945 6872 Fax: 708 338 9455

www.wilo-na.com

Wilo Canada Inc
Bay 7 - 2915 - 10th Ave N. E.
Calgary, Alberta, T2A 5L4
Phone: 866 945 6236 Fax: 403 277 9456

GRUNDFOS

Series UP
CLOSED SYSTEMS

Wet-Rotor, In-Line, Single Stage, Maintenance Free, Circulator Pumps

Submittal Data

60 Cycle

JOB or CUSTOMER:	
ENGINEER:	
CONTRACTOR:	
SUBMITTED BY:	DATE:
APPROVED BY:	DATE:
ORDER NO:	DATE:
SPECIFICATION REF:	

QUANTITY	TAG NO.	MODEL NO.	GPM	FEET	VOLT	PHASE	COMMENTS

Technical Data

FLOW RANGE: 0 to 46 U.S. GPM
HEAD RANGE: 0 to 32 Feet
MOTOR: 2Pole, Single Phase
MAXIMUM FLUID TEMPERATURE – CLOSED SYSTEMS: 230°F (110°C)
MIN. FLUID TEMPERATURE for UP15: 36°F (2°C)
MIN. FLUID TEMPERATURE for ALL OTHERS: 32°F (0°C)

Ambient Air Temp.	95°F (35°C)	130°F (55°C)	140°F (60°C)	160°F (71°C)	175°F (79°C)
Maximum Water Temp.	230°F (110°C)	220°F (104°C)	210°F (99°C)	190°F (88°C)	175°F (79°C)

MAXIMUM WORKING PRESSURE: 145 PSI
MINIMUM REQUIRED INLET PRESSURE:

230°F (110°C)	190°F (88°C)	140°F (60°C)
36 Ft. (1.10m)	9.0 Ft. (2.8m)	3.0 Ft. (0.9m)
15.6 psi	4.0 psi	1.3 psi

Mounting Positions

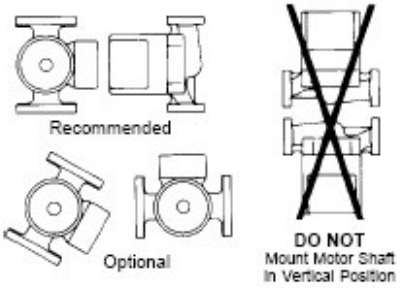

FOR INDOOR USE ONLY

Dimensions, and Weights

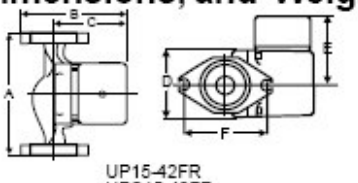

UP15-42FR
UPS15-42FR

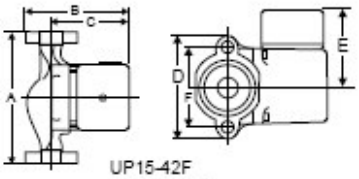

UP15-42F
UPS15-42F

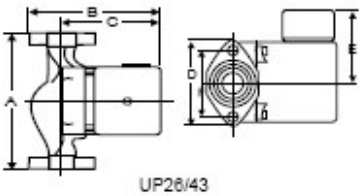

UP26/43

CLOSED SYSTEM MODELS	A	B	C	D	E	F ①	Shipping Connection Type and Size	Wt. (Lbs.)
UP15-42F (BRUTE II®) & UPS15-42F	6 1/2	5 1/4	4	4 3/16	3 1/4	3 5/32	Flange – (2) 1/2" Dia. Bolt Holes	7 1/4
UP15-FR (BRUTE II®) & UPS15-42FR	6 1/2	5 15/16	4	3 3/4	3 1/4	3 5/32	Flange – (2) 1/2" Dia. Bolt Holes	7 1/4
UP15-42FC (*Brute II w/ check valve)	6 1/2	5 1/4	4	4 3/16	3 1/4	3 5/32	Flange – (2) 1/2" Dia. Bolt Holes	7 1/4
UP26-64F & UP26-96F	6 1/2	6 3/8	5 1/16	4 1/8	3 1/2	3 5/32	Flange – (2) 1/2" Dia. Bolt Holes	11 1/4
UP26-99F	6 1/2	6 3/8	5 1/16	4 1/8	3 1/2	3 5/32	Flange – (2) 1/2" Dia. Bolt Holes	12 1/2
UP43-75F	8 1/2	6 11/16	5 3/16	4 3/4	3 1/2	3 7/16	Flange – (2) 1/2" Dia. Bolt Holes	13 1/2

NOTES: All dimensions are in inches. ①"F" dimension is the flange bolt centerline to centerline.
*Criculators w/ check valve have a maximum water temperature of 200°F.

Performance Curves

Cast Iron Construction – Flange Mount

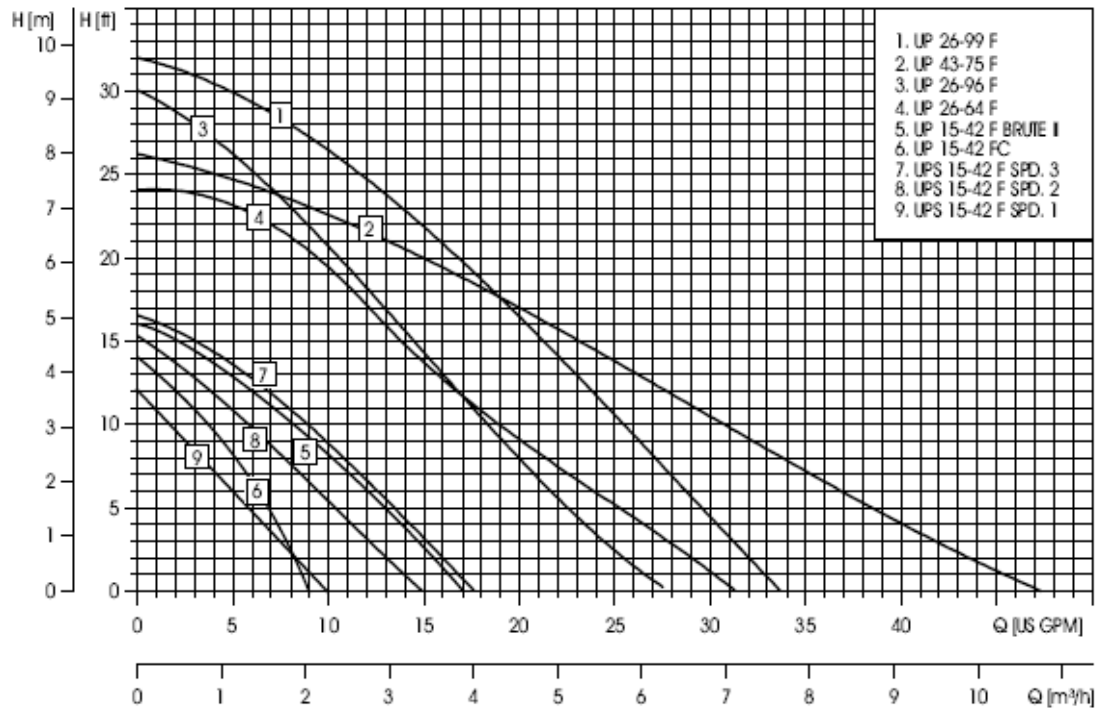

Note: Performance shown is for 115V Models. 230V models will vary slightly.

Electrical Data

MODEL	VOLTS	AMPS	WATTS	HP	CAPACITOR
UP15-42F/FR/FC (BRUTE II®)	115	.74	85	1/25	10μF/180V
	230	.43	95	1/25	2μF/400V
UPS15-42F Spd. 3 (115V)	115	.74	85	1/25	10μF/180V
Spd. 2	---	.57	65	---	---
Spd. 1	---	.40	45	---	---
UPS15-42F Spd. 3 (230V)	230	.43	95	1/25	2μF/400V
Spd. 2	---	.19	40	---	---
Spd. 1	---	.14	30	---	---

MODEL	VOLTS	AMPS	WATTS	HP	CAPACITOR
UP26-64F	115	1.70	185	1/12	8μF/180V
	230	.80	175	1/12	2.5μF/380V
UP26-96F	115	1.70	205	1/12	10μF/180V
	230	.80	205	1/12	2.5μF/380V
UP26-99F	115	2.15	245	1/8	10μF/180V
	230	1.07	245	1/8	2.5μF/380V
UP43-75F	115	2.15	215	1/8	10μF/180V
	230	1.07	220	1/8	2.5μF/380V

NOTE: All UP models are single speed except for the 3-speed UPS15-42F, 115 and 230 volt.

Materials of Construction

DESCRIPTION	MATERIAL
Inlet Cone, Bearing Plate, Bearing Retainers, Rotor Can, Rotor Cladding, Shaft Retainer	304 Stainless Steel
Stator Housing	Aluminum
Shaft, Upper & Lower Radial Bearings	Aluminum Oxide Ceramic
Thrust Bearing	Metal Impregnated Carbon
Check Valve	ACETAL With 302 Stainless Steel Spring & Nitrile Rubber Seats

DESCRIPTION	MATERIA
Pump Housing (Volute)	Cast Iron
O'Ring & Gaskets	EP (Ethylene Propylene Rubber)
Impeller	PES Composite (30% Glass Filled)
Terminal Box	Noryl®

NOTE: Noryl® is a registered trademark of General Electric Company. BRUTE II® is a registered trademark of Grundfos Pumps Corporation.

GRUNDFOS®
Leaders in Pump Technology
Grundfos Pumps Corporation • 3131 N. Business Park Avenue • Fresno, CA 93727
Customer Service Centers: Allentown, PA • Fresno, CA
Phone: (800) 333-1366 • **Fax:** (800) 333-1363
Canada: Oakville, Ontario • **Mexico:** Apodaca, N.L.,
Visit our website at www.us.grundfos.com

L-UP-TL-107 Rev. 12/00
PRINTED IN USA

Heat Pump

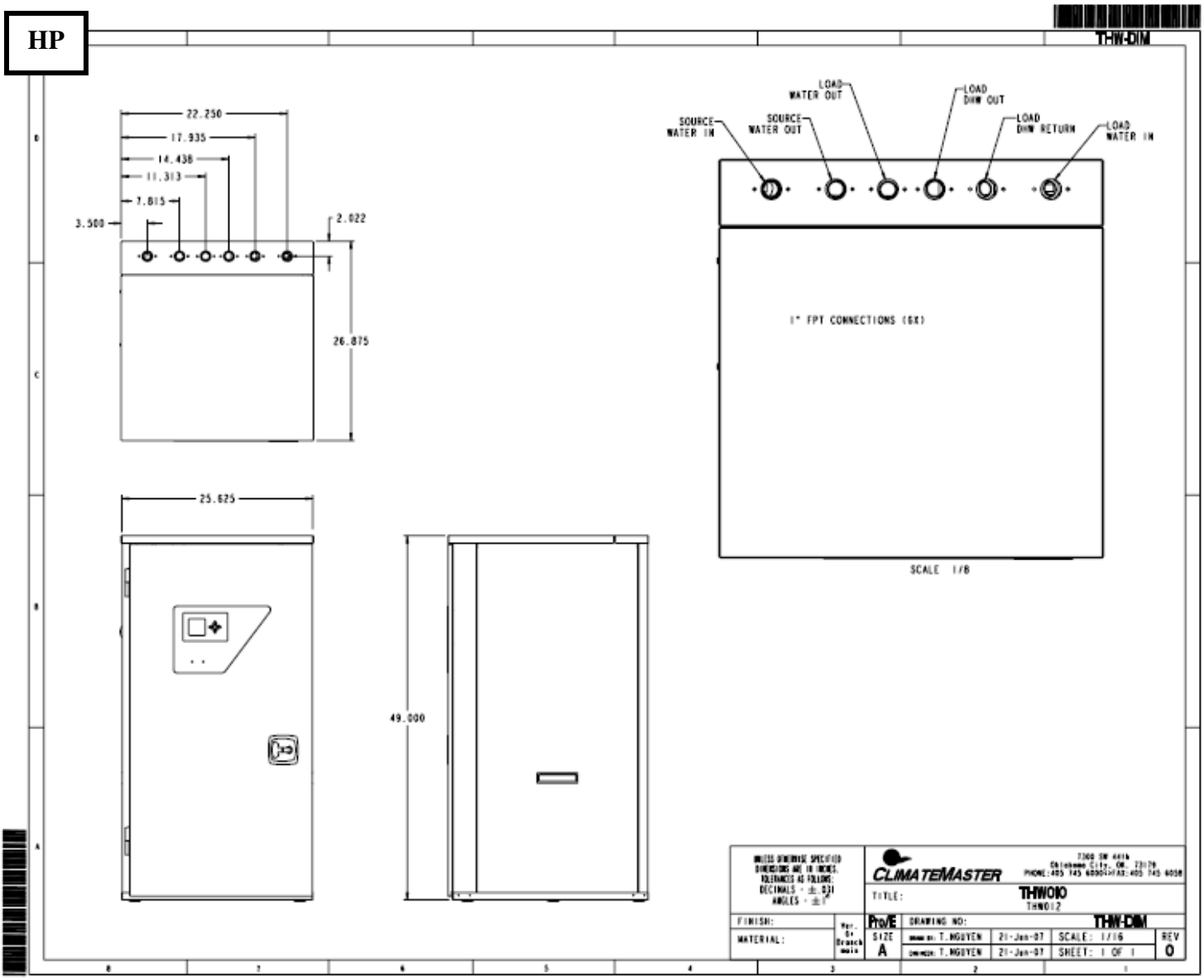
THW-DIM
22.250
17.935
14.438
11.313
7.815
3.500
2.022
26.875
25.625
49.000
SOURCE WATER IN
SOURCE WATER OUT
LOAD WATER OUT
LOAD DHW OUT
LOAD DHW RETURN
LOAD WATER IN
1" FPT CONNECTIONS (6X)
SCALE 1/8
UNLESS OTHERWISE SPECIFIED DIMENSIONS ARE IN INCHES. TOLERANCES AS FOLLOWS: DECIMALS - ± .031 ANGLES - ± 1°
CLIMATEMASTER
TITLE:
THW010
THW012
FINISH:
MATERIAL:
ProVE
SIZE
A
DRAWING NO:
THW-DIM
T. NGUYEN
21-Jun-07
SCALE: 1/16
SHEET: 1 OF 1
REV
0

Photovoltaic Thermal Collector (PVT)

Sunstrip™ Solar Fins

Aluminum/Copper Fin
Technical Specifications

Thermo Dynamics Ltd.
44 Borden Avenue
Dartmouth, Nova Scotia
Canada, B3B-1C8
Telephone: (902) 468-1001
Facsimile: (902) 468-1002
Email: thermody@atcon.com

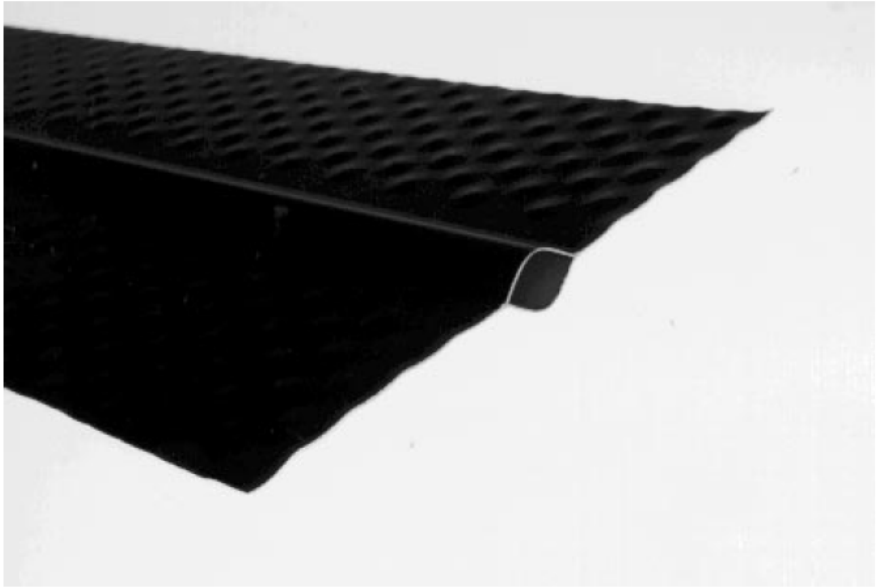

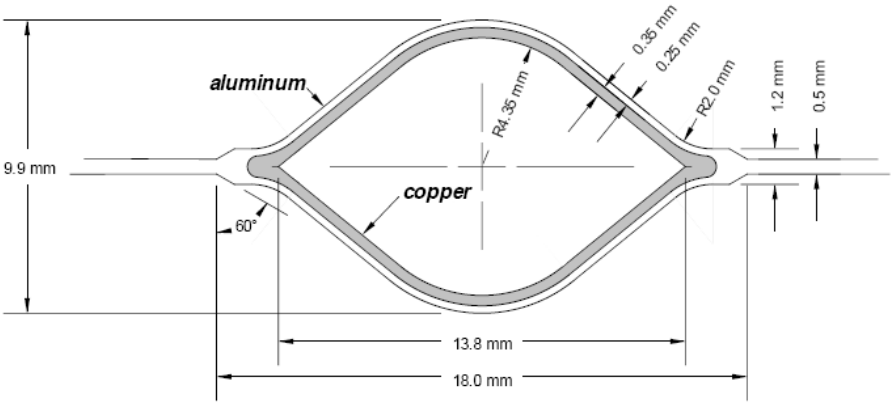

Sunstip™ SS146/12 cross section (scale 4:1)

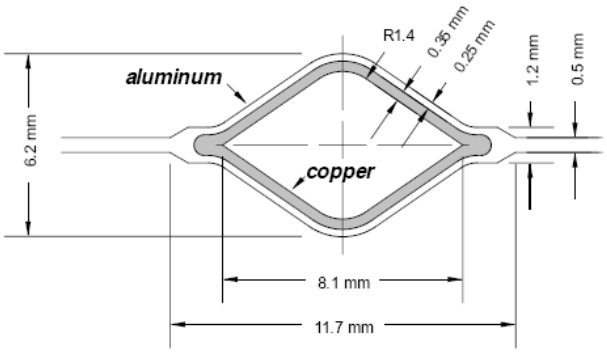

Sunstip™ SS146/8 cross section (scale 4:1)

A. General Information

1.0 Product Description

After more than a decade of research, the Sunstrip™ solar fin has emerged as one of the most innovative developments in solar technology. The fin's metallurgically-bonded aluminum completely surrounds a rhombic copper tube waterway. The corrosion resistance of the copper combined with the light weight and high thermal conductivity of aluminum produces the optimal finned tube. Sunstrip™ solar fins are available in either 8 mm or 12 mm nominal diameter waterways.

1.1 Options:

Sunstrip™ solar fins are available with highly selective Anodic–Cobalt™ or semi-selective black paint surface finishes; 12 mm (1/2") or 8 mm (1/4") copper waterway; cut and inflated to your specified length or coil form.

1.2 Dimensions:

SS146/12:
Fin width: 143 mm (5.63")
Waterway: 12 mm (1/2") nominal
Area:
Fin thickness: 0.5 mm (.02")

SS146/8:
Fin width: 143 mm (5.63")
Waterway: 8 mm (1/4") nominal
Area:
Fin thickness: 0.5 mm (.02")

1.3 Weight:

SS146/12	1.5 kg/m² (0.31 lb/ft²)
SS146/8	1.5kg/m² (0.31 lb/ft²)

2.0 Product Use

2.1 Product Applications:

Residential and commercial domestic water, process hot water, space heating, pool heating

2.2 Geographic and Climatic Limitations:

None.

Sunstrip™ Solar Fins

Aluminum/Copper Fin
Technical Specifications

Thermo Dynamics Ltd.
44 Borden Avenue
Dartmouth, Nova Scotia
Canada, B3B-1C8
Telephone: (902) 468-1001
Facsimile: (902) 468-1002
Email: thermody@atcon.com

C. Sunstrip™ Production

1.0 General

Sunstrip™ is produced by metallurgically bonding two strips of aluminum to a single copper tube which acts as a waterway. The Sunstrip™ rolling process involves four stages. First, the raw aluminum and copper are uncoiled, second the aluminum and copper are scratch brushed, third, the aluminum and copper are bonded together through high pressure steel rolls, and finally, the fin is coiled.

1.1 Uncoilers

Two 600 kg (1322 lb) coils of aluminum and one 150 kg (330 lb) of copper tube are loaded onto uncoilers. The uncoilers have brakes which allow tension to be maintained.

1.2 Brushing Station

The raw aluminum strips are scratched brushed over the entire width to eliminate surface contaminants and expose a large amount of underlying virgin material. The copper tube is scratch brushed on two sides, then flattened, and then scratch brushed on the top and bottom. This ensures that all mating surfaces between the copper and aluminum are contaminant free.

1.3 Roll Bonding

The scratch brushed aluminum and flattened copper tube are guided between two steel rolls which apply a very high pressure to the materials. This metallurgically bonds the materials together to form a strip of variable thickness.

1.4 Recoiler

The bonded strip exists the steel rolls and is coiled. The finished coils can be up to 520 linear meters (1,706 ft).

2.0 Sunstrip™ Availability

2.1 Coil form

The finished Sunstrip™ is available in coil form up to 520 linear meters (1,706 ft). The coils are palleted 8 high. Each coil of Sunstrip™ is 75 m^2 (807 ft^2). The customer can uncoil and inflate fin to their required lengths.

2.2 Inflation machine

The coils of Sunstrip™ are loaded onto an uncoiler. The strip is automatically fed, inflated, and cut to length. This process is used for the SS146/12 fin only. Fin lengths available up to 5 m (16 ft).

2.3 Sunstrip™ FAKIR

The SS146/8 Sunstrip™ fin is used for the MICRO-FLO® absorbers. The coils are loaded onto an uncoiler, and then fed into the FAKIR which inflates, punches, and bends the fin into a serpentine absorber. This process is used for the SS146/8 fin only. Absorber lengths are available from 1 m (3.3 ft) to 4 m (13 ft).

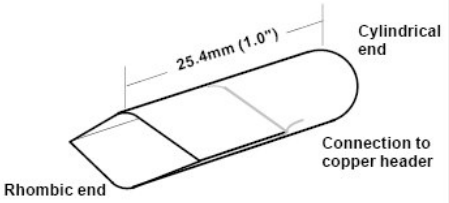

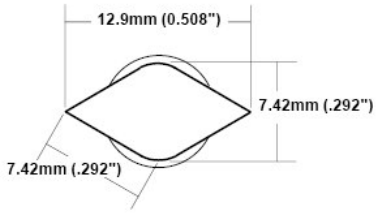

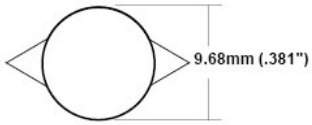

Round - Rhombic nipple (Type L copper, 3/8" nominal) for connection of SS146/12 Sunstrip™ fin to copper headers. Grid solar collectors

Sunstrip™ inflation machine
Operation: uncoil, inflate and cut SS146/12 fin

Sunstrip™ FAKIR
Operation: uncoil, punch, inflate, and bend SS146/8 fin into serpentine absorbers

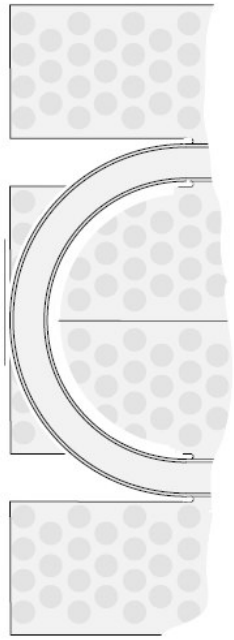

Typical U-bend of a serpentine absorber, made from SS146/8 Sunstrip™.

Sunstrip™ Solar Fins

Aluminum/Copper Fin
Technical Specifications

3.0 Manufacturer's Experience
Thermo Dynamics Ltd. (TDL) is a Canadian company engaged in the research, development, production, distribution and installation of solar thermal equipment. The company has been involved in the solar industry since 1981 and operates from its head office and factory in Dartmouth, Nova Scotia, Canada, sister city of Halifax situated on the Atlantic coast. The company's specialization is the glazed liquid-flat-plate (LFP) collectors with metal absorbers. TDL is a fully integrated solar thermal company with the ability to convert raw aluminum and copper into a high technology solar water heating system.

Thermo Dynamics Ltd., as a world leader in solar technology, manufactures and markets solar heating equipment from complete systems to basic selective components for O.E.M.'s licensees, dealers and distributors throughout North America, Europe, Africa, New Zealand, as well as 10 other countries around the world.

3.2 Production:
10,000 m² per year for the SS146/12 and SS146/8 Sunstrip™ solar fin.

Production capacity is more than 400,000 m² per year.

B. Sunstrip™ Solar Fins

1.0 General Description:
Two strips of aluminum metallurgically bonded to a single copper tube.

1.1 Generic/Trade Names:
Sunstrip™ solar fins
MICRO-FLO® for SS146/8

12. Chemical Composition:
Aluminum: 1350
Copper: 99.9% pure

1.3 Physical Treatment:
None

1.4 Physical properties:
Average weight: 1.5 kg/m² (0.31 lb/ft²)
High burst pressure: 6.0 MPa (870 psi) for SS146/12
High burst pressure: 20 MPa (2900 psi) for SS146/8
Fin is automatically tested to 250 psi for SS146/12
1100 psi for 146/8.

1.5 Mechanical Strength:
For Sunstrip™, featuring the aluminum substrate, with a tube of open area 50 mm² (.078 in²), the static burst pressure is 6.0 MPa (870 psi). More importantly, when cycled between 21 kPa (3 psi) and 690 kPa (100 psi), the fatigue life is at least 200,000 cycles. In addition, temperature cycling from 10°C (50°F) and 150°C (302°F) for 60,000 cycles results in absolutely no reduction of the static burst pressure.

In production, all Sunstrip™ material is subjected to a combined pressure leak test during the inflation process of the tube - following the rolling mill operation.

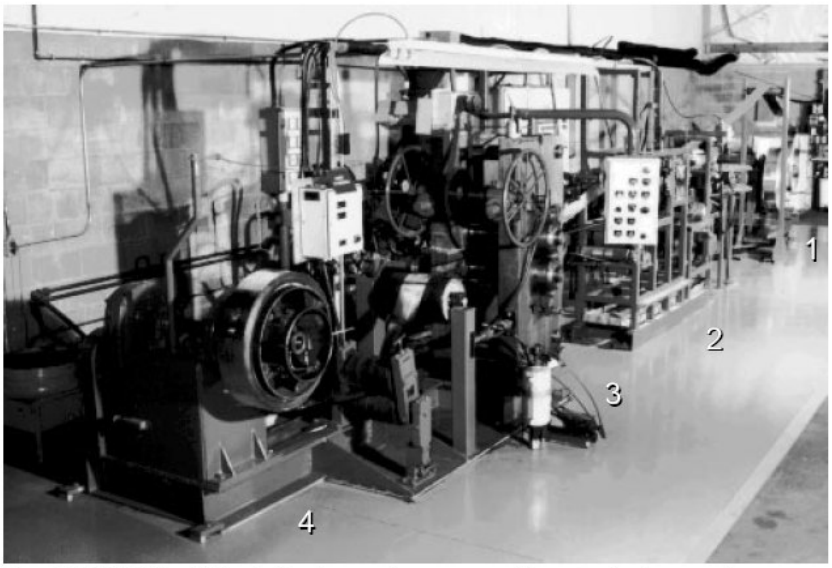

Sunstrip™ Rolling Mill: 1, aluminum and copper uncoilers; 2, aluminum and copper scratch brushing station; 3, high pressure steel rolls for bonding; 4, Sunstrip™ fin recoiler.

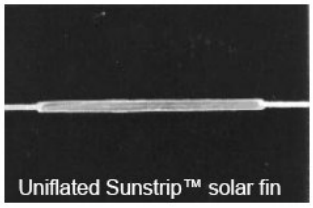
Uniflated Sunstrip™ solar fin

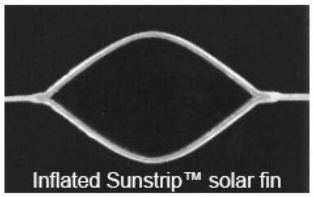
Inflated Sunstrip™ solar fin

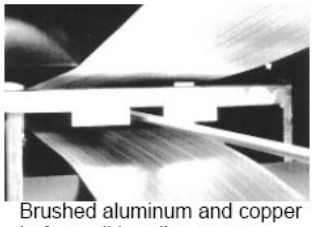
Brushed aluminum and copper before roll bonding process

Sunstrip™ Solar Fins

Aluminum/Copper Fin
Technical Specifications

D. Optical Performance

1.0 General
Sunstrip™ solar fins are available in bare aluminum, highly selective Anodic-Cobalt™, and semi selective black paint surfaces.

2.0 Anodic-Cobalt™ selective surface

2.1 General
This surface is formed by creating a thin layer of aluminum oxide (0.5 to 1.0 υm) on the surface of the Sunstrip™ solar fin and then embedding cobalt in this layer. The anodizing process, which forms the layer of aluminum oxide, is a process used world wide to protect and prevent it from weathering.

2.2 Appearance
The cobalt deposited in the aluminum oxide layer gives the surface the characteristic black/green/purple colour.

2.3 Spectral Properties
The Anodic-Cobalt™ selective surface has excellent spectral properties. Testing at the University of Waterloo, Ontario, Canada yielded the following results:
absorptivity α = 92%
emissivity ε = 15%

2.4 Durability
The Anodic-Cobalt™ surface is very durable particularly at high temperatures.

2.5 Availability
The Anodic-Cobalt™ surface can be applied to solar fins as long as 2.75 m (9 ft).

3.0 Semi-selective black paint

3.1 General
The semi selective black paint is applied in a atomizing spraying process.

3.1 Appearance
The painted surface is flat black in colour.

3.2 Spectral Properties
The spectral properties of the semi-selective black painted surface are:
absorptivity α = 94%
emissivity ε = 28%

3.3 Durability
The black painted surface is very durable especially in humid conditions

3.4 Availability
The black paint surface can be applied to solar fins as long as 5 m (16 ft).

E. Thermal & Hydraulic Performance

1.0 General
Good thermal performance due to good metallurgical bonding and high conductivity of aluminum and copper.

1.1 Fin efficiency
Good metallurgical bonding, highly conductive metals, and superior surface treatments contribute to the high fin efficiency of Sunstrip™ Solar Fins. Graph below shows fin efficiency versus fin width.

2.0 Hydraulic performance
Graph indicates the pressure drop through Sunstrip™ SS146/12 for various lengths of fin.

F. Maintenance and Warranty

1.0 Maintenance
Once installed, Sunstrip™ solar fins are maintenance free. Anodic-Cobalt™ or painted surface should not be directly exposed to high humidity. In collector design, suitable air flow through the collector should be considered to maintain less than 95% relative humidity.

2.0 Warranty
Sunstrip™ fins are warranted for 10 years. The manufacturer may repair or replace the fins as required at his discretion.

Pressure drop versus Flow rate, SS146/12 Sunstrip™

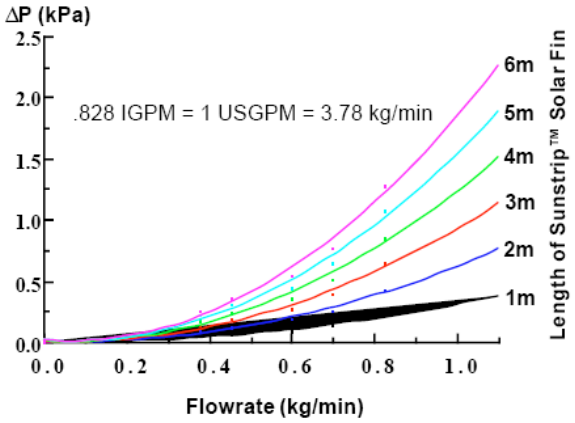

Fin Efficiency versus Fin Width

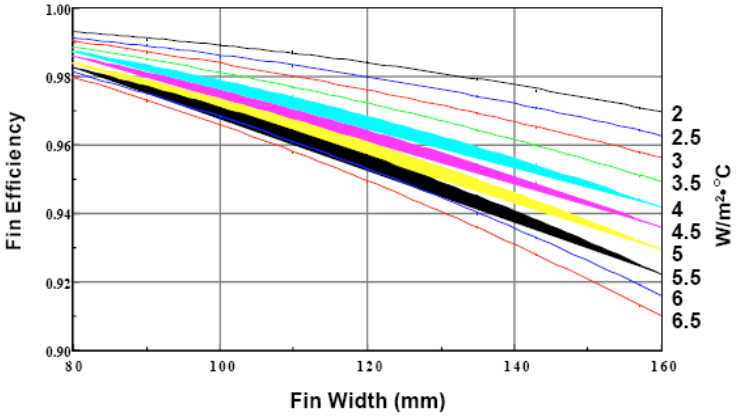

Water Heaters

BRADFORD WHITE®

Bradford White PowerStor Series™

Residential Energy Saver Single-Wall Indirect Water Heater

Features:

ISO 9001 STANDARD — Bradford White is ISO registered to the 9001-standard.

- **2" Non-CFC foam insulation—**covers the sides and top of tank to save energy by retarding loss of heat.
- **Factory installed nipples—**for longer water heater life. Easier installation.
- **Fully automatic controls—**immersed Honeywell aquastat.
- **Vitraglas® lining—**Bradford White water heater tanks are protected from the corrosive effects of hot water by an exclusive ceramic porcelain-like coating. The Bradford White high silica Vitraglas® lining provides a tough interior surface for our hot water tanks.
- **Three protective anode rods—**provides added protection against corrosion for long trouble-free service.
- **Factory installed Hydrojet® Total Performance System—**cold inlet sediment reducing device. Helps to minimize sediment build up in tank. Increases first hour delivery of hot water while minimizing temperature build up at top of tank.
- **Heat exchanger –** single wall 1½" glass coated (Vitraglas®) steel.
- **Supply and Return Connections –** the 1" NPT female connections are located on the front for both the boiler supply and boiler return.
- **Stand-by heat loss—**less than ½°F per hour.
- **Brass drain valve.**
- **T&P relief valve included—**all models feature opening on side of tank.
- **Limited lifetime warranty on steel tank and heat exchanger—** heavy gauge steel automatically formed, rolled and welded to assure a continuous seam for glass lining.
- **Six year limited warranty on parts.**

MANUFACTURED UNDER ONE OR MORE OF THE FOLLOWING U.S. PATENTS: 5,954,492; 5,761,379; 5,943,984; 5,081,696; 5,988,117; 6,142,216; 5,199,385; 6,684,821; 5,574,822; 5,372,185; 5,485,879; 5,277,171; (B1)5,341,770; 5,660,165; 5,596,952; 5,682,666; 4,904,428; 5,023,031; 5,000,893; 4,669,448; 4,829,983; 4,808,356; 5,115,767; 5,092,519; 5,052,346; 4,416,222; 4,628,184; 4,861,968; 4,672,919; Re. 34,534. OTHER U.S. AND FOREIGN PATENT APPLICATIONS PENDING. CURRENT CANADIAN PATENTS: 1,272,914; 1,280,043; 1,289,832; 2,045,862; 2,112,515; 2,108,186; 2,107,012, 2,092,105.

Bradford White PowerStor Series™ Residential Energy Saver Single-Wall Indirect Water Heater

Energy Saver Models

These water heaters meet or exceed the insulating standards established under ASHRAE Standard 90.1b (current edition).

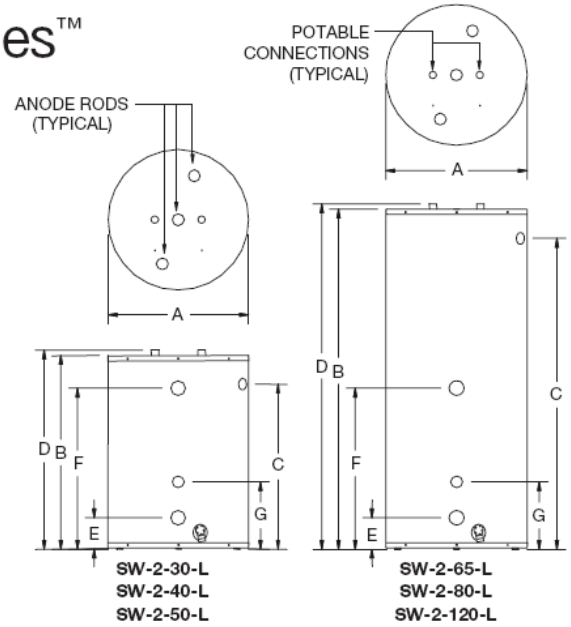

Bradford White Powerstor Series™

Model	Imp. Gal. Cap.	U.S. Gal. Cap.	Liters	A Jacket Diameter in.	A Jacket Diameter mm.	B Height Floor to Heater Top in.	B Height Floor to Heater Top mm.	C Height Floor to T&P Conn. in.	C Height Floor to T&P Conn. mm.	D Height Floor to Water Conn. in.	D Height Floor to Water Conn. mm.	E Height Floor to Exchanger Outlet in.	E Height Floor to Exchanger Outlet mm.	F Height Floor to Exchanger Inlet in.	F Height Floor to Exchanger Inlet mm	G Height Floor to Aquastat in.	G Height Floor to Aquastat mm	Approx. Shipping Weight Lbs.	Approx. Shipping Weight Kg.
SW-2-30-L	25	30	114	22	559	33⅝	854	28¼	718	34⅜	873	5⅜	137	27½	699	11½	292	140	64
SW-2-40-L	33	40	151	24	610	36	914	29¾	756	36¾	933	5⅜	137	27½	699	11½	292	168	76
SW-2-50-L	42	50	189	26	660	36	914	29¾	756	36¾	933	5⅜	137	27½	699	11½	292	196	89
SW-2-65-L	50	60	227	22	559	59¼	1505	53⅛	1349	60	1524	5⅜	137	27½	699	11½	292	196	89
SW-2-80-L	62	75	284	24	610	59	1499	52⅞	1343	59¾	1518	5⅜	137	27½	699	11½	292	224	102
SW-2-120-L	97	116	439	28¼	718	62½	1588	55¾	1416	63¼	1607	6⅜	162	28¼	718	11½	292	355	161

General

All units are certified at 300 PSI (2068 kPa) test pressure and 150 PSI working pressure (1034 kPa). All potable water connections are ¾" (19mm) NPT on 8" (203mm) centers.

Dimensions and specifications subject to change without notice in accordance with our policy of continuous product improvement.

	SW-2-30-L	SW-2-40-L	SW-2-50-L	SW-2-65-L	SW-2-80-L	SW-2-120-L
1st Hr. US Gals. Rating @ 140°F	279	288	297	306	321	357
1st Hr. Liters Rating @ 60°C	1056	1090	1124	1158	1215	1351
1st Hr. US Gals. Rating @ 115°F	429	438	447	456	470	507
1st Hr. Liters Rating @ 46°C	1624	1658	1692	1726	1779	1919

Note: All ratings are based on 200°F boiler water temperature, 50°F potable water inlet temperature and an approximate boiler output of 220,000 BTU/H

6-Year Limited Warranty on Component Parts

BRADFORD WHITE CORPORATION has a 6-year warranty on replaceable parts–thermostat, dip tube, drain valve. These quality components are manufactured for us by industry leaders and will be replaced in the event of failure during the parts warranty period (exclusive of shipping and re-installation cost.)§

Limited Lifetime Tank and Heat Exchanger Warranties

BRADFORD WHITE CORPORATION LIMITED WARRANTY: Protects your investment in a quality glass-lined water heater and single-wall heat exchanger. If the tank or heat exchanger leaks for reasons of faulty materials, workmanship, or corrosion within the warranty period, the entire unit will be replaced with a comparable unit of our manufacture (exclusive of shipping and re-installation cost.)§

§ Some states do not allow limitations on warranties. For products installed in USA, Canada and Puerto Rico. See complete copy of the warranty included with the heater.

BRADFORD WHITE® CORPORATION
Ambler, PA

For U.S. and Canada field service, contact your professional installer or local Bradford White sales representative.

Sales/800-523-2931
Fax/215-641-1670

Technical Support/800-334-3393
Fax/269-795-1089

Warranty/800-531-2111
Fax/269-795-1089

International:
Telephone/215-641-9400
Telefax/215-641-9750

Fax on Demand:
888-538-7833

www.bradfordwhite.com

BRADFORD WHITE-CANADA® INC.
Mississauga, ON

Sales/Technical Support
866-690-0961
905-238-0100

Fax/905-238-0105

www.bradfordwhitecanada.com

Count On Bradford White For *Everything* Hot Water

System Schematic

Cryogel Ice Ball Thermal Storage

Atmospheric Tank System

Photos of Existing Installation of this type available on Cryogel's Web Site: http://www.cryogel.com/

Shown with load upstream of storage tanks. Load downstream is also acceptable. See pressurized system schematic for downstream piping configuration.

Tank details and internals available from Cryogel at no cost to designer.

Cryogel
San Diego, CA
Tel: (858) 457-1837
Fax: (858) 457-3480
Email: tes@cryogel.com

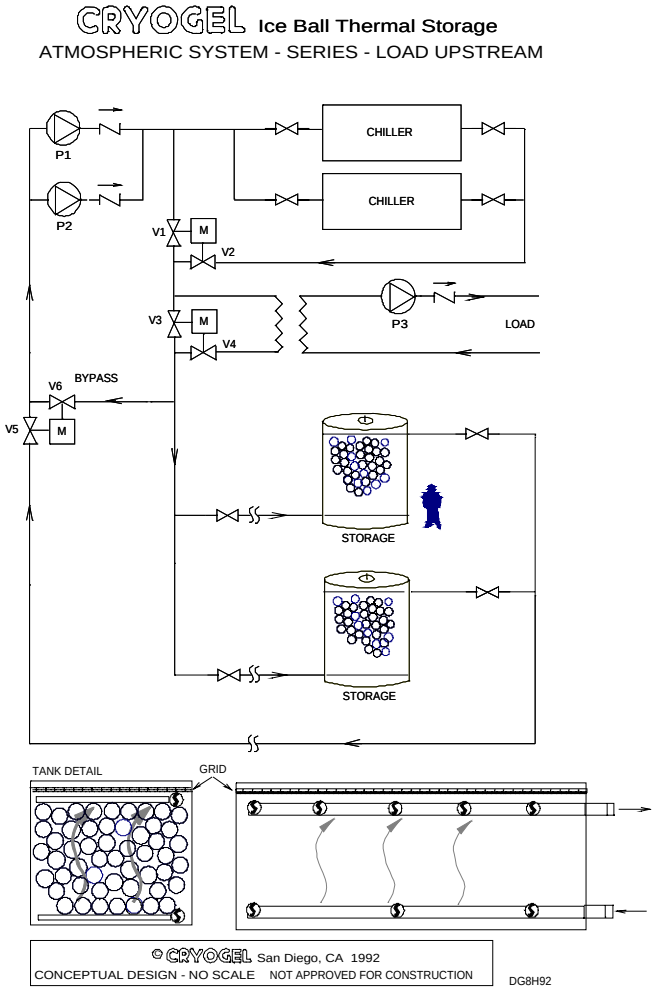

Since ice floats inside the ball during the melt mode, and since the balls are flexible, the ice remains in contact with the interior wall of each Ice Ball, which improves heat transfer between the ice and the glycol solution. While it may go without saying, the Ice Balls move only slightly due to flexure of the dimples during freezing and melting... the Ice Balls do not move around within the tank or piping.

Cryogel Ice Balls are constructed to withstand the weight of additional Ice Balls stacked above to the full height of most tanks. Resistance to crushing has also been verified by independent laboratory testing.

PRESSURIZED TANK DESIGN OPTION

Industrial grade pressure vessels may be horizontal or vertical and include manways on top for loading the Ice Balls. Automatic air vents are installed on top of each tank to insure elimination of all air within the storage tank(s). Tank(s) are designed for operating pressures as specified by the design engineer and must be constructed in accordance with local standards. The inlet and outlet pipes may exit the end or sides of each tank to allow for easy installation of piping. Pressure vessels may be located beneath parking lots or other areas with traffic above.

System Schematic

Cryogel IceBall Thermal Storage

Pressurized Tank System

Photos of Existing Installation of this type available on Cryogel's Web Site: http://www.cryogel.com/

Shown with load downstream of storage tanks. Load upstream is also acceptable. See atmospheric system schematic for upstream piping configuration.

Tank details, internals and inventory control design are available from Cryogel at no cost to designer.

Cryogel
San Diego, CA
Tel: (858) 457-1837
Fax: (858) 457-3480
Email: tes@cryogel.com

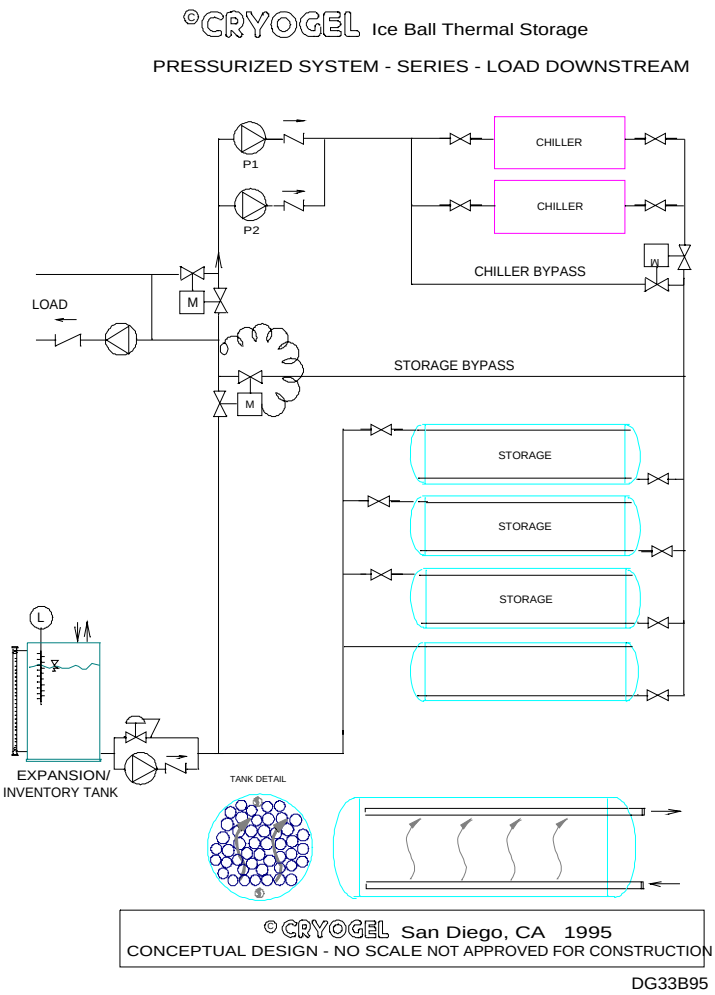

As the water freezes inside the Ice Balls and as the Ice Ball dimples flex outward, glycol solution surrounding the balls is displaced. This fluid displacement can be monitored to provide information as to the amount of ice in storage at any time. (See Ice Inventory Control.)

STORAGE CAPACITY AND SYSTEM SIZING

Storage capacity requirements are determined by the designer who normally develops an hourly cooling load profile. A load profile is the number of tons of cooling capacity required each hour to satisfy the air conditioning or process cooling load. The designer must also consider and specify the temperatures necessary to satisfy the load, i.e. the entering temperatures required at fan coils or heat exchangers. Ice Ball systems may be designed to provide 100% of the cooling load required (full storage) or some smaller portion of the total load (partial storage). Cryogel will assist designers with economic analysis to determine the best choice of full or partial storage.

The Rated (usable) storage capacity, specified by the design engineer, represents the number of ton hours of storage capacity that must be discharged to satisfy the cooling load. The Nominal (total) storage capacity is the actual number of ton hours that must be installed to achieve the Rated discharge capacity at the desired temperatures. The Nominal capacity is greater than Rated capacity for ALL typical ice storage systems because not all of the ice can be melted at usable rates or temperatures. If a system is sized such that 100% of the storage capacity must be discharged to satisfy the load, it is most likely sized improperly.

DISCHARGE MODE - ICE MELTING

Usually, the last hour of the discharge period is the critical hour for sizing a thermal storage system. However, it is important to confirm that the storage system is capable of satisfying every hour of a specified load profile. Sometimes the nominal storage capacity must be increased to satisfy a critical hour before the last hour.

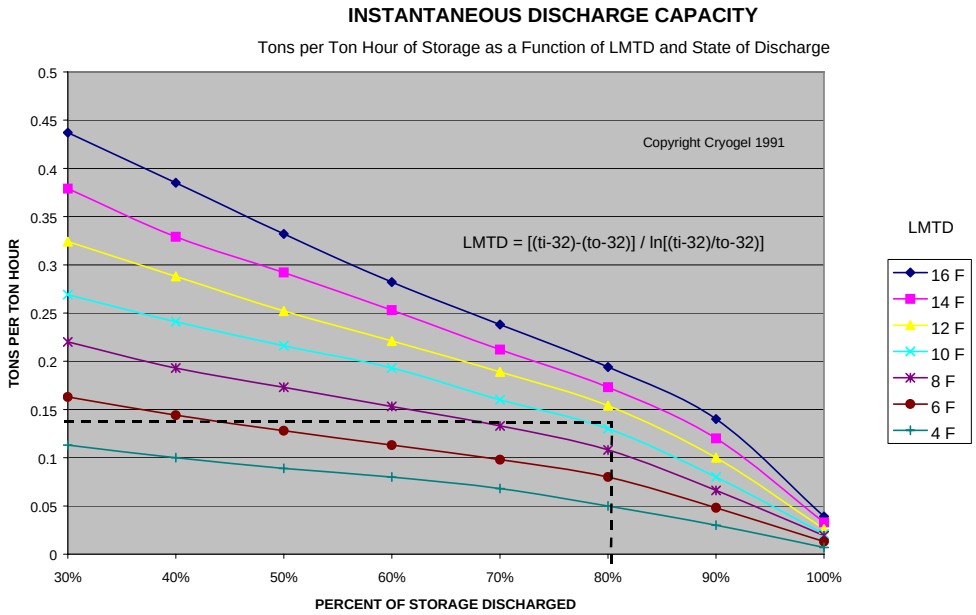

Example: Discharge temperatures of 50 F Entering Storage 38 F Leaving Storage, LMTD = 10.92 F.
With 80% of the Ice in Storage Already Melted (discharged), the system can produce .148 tons per ton hour.
For a system with a rated capacity of 1,000 ton hours, the instantaneous capacity at 80% Discharge is 148 tons.

Cryogel sizing is based on independent laboratory test data. Cryogel has assembled that data into a set of performance curves. These curves represent the ability of the Ice Balls to transfer heat based upon the percentage of ice in the tanks and the Log Mean Temperature Differential (LMTD) across the tanks. This is similar to the methodology heat exchanger manufacturers use for sizing of their equipment.

Cryogel has developed computer software for sizing systems using temperature and capacity data supplied by the designer. This software, together with independent laboratory data, allows Cryogel to predict system performance at any point during the discharge cycle.

It is important to notice that for the discharge cycle, lower temperatures required at the load will result in lower LMTD. This will result in lower instantaneous capacity and lower discharge rates. To compensate for lower design temperatures, the number of Nominal ton hours must be increased. Most thermal storage manufacturers consider a practical discharge temperature leaving to be 38°F. While additional cooling may be removed from the storage tank above this temperature, the temperature may not be low enough to satisfy the cooling load. In simple terms, lower specified discharge temperatures mean that the thermal storage systems must be increased in size.

A storage by-pass line with modulating valves is normally utilized to control the rate of discharge from the storage tank(s). Flow across these valves (and the storage tank(s)) during discharge is governed by design temperatures, instantaneous cooling load and the percentage of ice in the storage tank(s).

CHARGING MODE - ICE MAKING

Charging a thermal storage system can be accomplished with chillers capable of producing ice-making temperatures. Reciprocating, rotary screw or multi-stage centrifugal chillers are normally specified in thermal storage systems. Single-stage centrifugal chillers are not acceptable unless designed for a specific project by the chiller manufacturer in conjunction with Cryogel.

The chiller reduces the glycol temperature to 22 - 24°F, depending on system design, to freeze the Ice Balls. Normal chiller shut-off is set at 20°F as means of keeping the chiller fully loaded during the charge cycle. As everyone with a freezer knows, it is possible to make ice freeze faster by reducing the temperature. This fact is illustrated by Cryogel charge performance curves which compare charge time to the temperatures (LMTD) produced by the chiller. It is also clear that more energy is required to produce lower temperatures.

The following curves allow designers to choose the most economical chiller operation based on the number of off-peak hours available for making ice. By using the longest possible charge period, the smallest chillers and most economical operating temperatures may be selected.

assembly with an HOA switch, is enclosed in a weather tight NEMA 4 enclosure. The control is mounted on a steel base plate, pre-piped and pre-wired by Cryogel and is ready for connection by the installing contractor.

STORAGE TANK INSULATION

Storage tanks are typically field insulated with external insulation. For outdoor tanks, the insulation may be rigid 100% closed cell urethane foam. Foam should be applied to a minimum thickness of 2 inches or with a minimum insulation value of R-12. Of course, the insulation value is dependent upon local temperature and humidity. Foam insulation on the tanks is sealed with a protective urethane spray coating which is appropriate for this application. Cryogel strongly recommends **against** the use of urethane foam spray insulation in an indoor application. Indoor tanks should be insulated with fiberglass or other insulation, which will not burn or produce toxic fumes in case of fire. Similar R valves are required with all types of insulation.

HEAT TRANSFER FLUID

The heat transfer fluid is a glycol/water solution with a glycol concentration no less than 25% by volume. The heat transfer fluid must be inhibited ethylene or propylene glycol, as manufactured by DOW Chemical or HOUGHTON Chemical. The fluid and concentration must be acceptable to ancillary equipment manufacturers, including chiller and heat exchanger manufacturer. Contamination of the heat transfer fluid with any chemicals other than glycol may damage the plastic Ice Balls and other plastic or elastomer components of the system. New and retrofit systems and components must be properly flushed with a 1 - 2% solution of trisodium phosphate (TSP) and flushed with clean water according to the glycol manufacturer's instructions, prior to installation of the glycol. Water used to dilute glycol concentrate must meet minimum water quality standards as determined by the glycol manufacturer. (See Installation Instructions.)

INSTALLATION

Ice Balls are shipped in cardboard shipping containers, with approximately 1,000 balls each. The shipping container sets on a pallet to ease handling during initial unloading and installation of the Ice Balls. Ice Balls are delivered in a fully charged and sealed condition. Like marbles in a coffee can, Ice Balls fill the tanks in proper arrangement to insure optimum flow between each ball. Proper filling is possible due to the spherical configuration of the Ice Balls. This eliminates costs associated with field labor for stacking storage media or installing heat exchangers in the tanks.

Detailed Installation Instructions are available by contacting Cryogel at:

CRYOGEL
P.O. Box 910525 San Diego, CA 92191
Tel: (858) 457-1837 Fax: (858) 457-3480
Email: tes@cryogel.com Web Site: www.cryogel.com

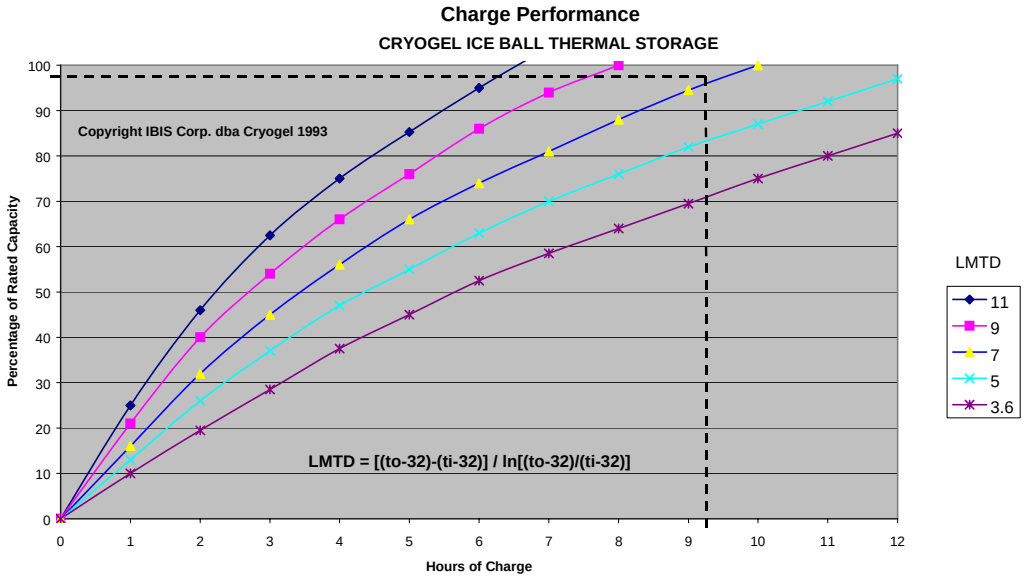

Example: Charge Temperatures of 22 x 27 F, the LMTD is 7.21 F.

Ice Balls are 97% Charged in Approximately 9.3 hours.

Ice Balls are 100% Charged in approximately 10 hours.

INVENTORY TANK AND CONTROL PACKAGE

Pressurized storage systems include an inventory tank and inventory control package. **(The inventory package is not required and is not used with atmospheric storage tanks.)** As Ice Balls in the storage tank freeze and expand, glycol solution is displaced. The displaced fluid is forced into the inventory tank and the inventory tank level rises. This level increase provides an approximation of the amount of ice in storage. During discharge, the displaced glycol is returned to the storage tank by means of a small pump in the inventory control package (see inventory control explanation and schematics).

The inventory tank is an atmospheric vessel that *"breathes"* when air is displaced or returned as a function of liquid level. The inventory tank and control system are installed above ground. The tank interior is coated with an epoxy or equal lining, which is compatible with the glycol solution. Air leaves the inventory tank through a standard air purge valve and returns by means of a standard vacuum breaker.

The inventory tank is insulated in the same manner as the ice storage tanks. Coal tar or equal is applied to the exterior bottom of the tank to prevent condensation from causing oxidation of the tank bottom.

A level probe is installed in the inventory tank for monitoring purposes only. This probe typically produces a 4 to 20 mA signal and is connected to the ice storage automation system to provide information as to the estimated amount of ice in the storage tank at any time during the charge or discharge cycles. This level probe may not be used for chiller control nor should it used for calculation of storage capacity.

The inventory control package consists of a pump, adjustable pressure sustaining valve, pressure switch and controls. The pump includes a TEFC motor and is suitable for indoor or outdoor operation. The control panel, which includes a starter and overload

Control Valves

SZ2 Series Multiple Zone Valve Return Manifold- with MZV Operators

SparcoZone2™ is the only multiple zone valve that is preassembled, prewired and ready to connect. It simplifies installation, saves labor, parts, time and money. The SparcoZone2™ multiple zone valve concept brings a factory assembled, piped and wired package to the job site that is easy to install and service. The reduced number of joints and wiring connections saves hours of labor and parts. It simplifies the repair of possible leaks and greatly reduces wiring mix ups. The contractor installs the pipes to the SparcoZone® manifold and connects 110V, the TT terminal and the thermostat wires. The low cost SparcoZone2™ supply header with four zone connections simplifies installation, saves money and provides a clean installation.

- Three or four zone multiple zone valves.
- Four SparcoZones, up to sixteen zones, can be assembled.
- Built-in balancing plugs for flow adjustment for each zone.
- Large flow rate, up to 10 gpm per zone.
- Manual opener for each zone.
- 4 wire PowerTrack™ operators with auxiliary switch, 10-12 sec. to open.
- Priority relay switch for indirect water heater.
- Low current draw, 0.25 amps, means low operating costs.
- Maximum shut off differential pressure 40 ft., 17.5 psi.
- Max. temp/pressure: 220 F/125psi.
- Bronze casting.
- Made in USA.

Dimensions Diagram

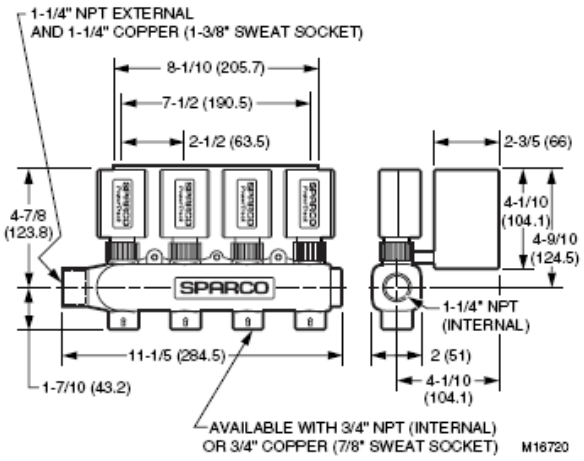

Materials (Body): Bronze
Dimensions, Approximate: 6 9/16 in. high x 11 3/16 in. long x 2 in. deep (167.1 mm high x 284.5 mm long x 50.8 mm deep)
Current Draw: 0.25 A
Flow Rate: 10 gpm
Maximum Differential Pressure: 40 ft., 17.5 psi
Maximum Operating Pressure: 125 psi
Maximum Temperature: 220 F (104 C)

Product Number	Number of Zones	Connection Type	Size	Description	Comments
SZ3S1	3 Zones	Sweat	3/4 in.	3 Zones Sweat Valve	Without Control
SZ3T1	3 Zones	Threaded	3/4 in.	3 Zones NPT Valve	Without Control
SZ4S1	4 Zones	Sweat	3/4 in.	4 Zones Sweat Valve	Without Control
SZ4T1	4 Zones	Threaded	3/4 in.	4 Zones NPT Valve	Without Control

S2Z Series Multiple Zone Valve Supply Manifold- without Valves

SparcoZone2™ is the only multiple zone valve that is preassembled, prewired and ready to connect. It simplifies installation, saves labor, parts, time and money. The SparcoZone2™ multiple zone valve concept brings a factory assembled, piped and wired package to the job site that is easy to install and service. The reduced number of joints and wiring connections saves hours of labor and parts. It simplifies the repair of possible leaks and greatly reduces wiring mix ups. The contractor installs the pipes to the SparcoZone® manifold and connects 110V, the TT terminal and the thermostat wires. The low cost SparcoZone2™ supply header with four zone connections simplifies installation, saves money and provides a clean installation.

- Three or four zone multiple zone valves.
- Four SparcoZones, up to sixteen zones, can be assembled.
- Built-in balancing plugs for flow adjustment for each zone.
- Large flow rate, up to 10 gpm per zone.
- Manual opener for each zone.
- 4 wire PowerTrack™ operators with auxiliary switch, 10-12 sec. to open.
- Priority relay switch for indirect water heater.
- Low current draw, 0.25 amps, means low operating costs.
- Maximum shut off differential pressure 40 ft., 17.5 psi.
- Max. temp/pressure: 220 F/125psi.
- Bronze casting.
- Made in USA.

Materials (Body): Bronze
Dimensions, Approximate: 6 9/16 in. high x 11 3/16 in. long x 2 in. deep (167.1 mm high x 284.5 mm long x 50.8 mm deep)
Current Draw: 0.25 A

Flow Rate: 10 gpm
Maximum Differential Pressure: 40 ft., 17.5 psi
Maximum Operating Pressure: 125 psi
Maximum Temperature: 220 F (104 C)

Product Number	Number of Zones	Connection Type	Size	Description	Comments
SH4S	3 Zones	Sweat	3/4 in.	4 Zone header	Header Only
SH4T	3 Zones	Threaded	3/4 in.	4 Zone header	Header Only

CV-2 to CV-8

VC Series Valves

VC Series Valves

Control central heating and/or cooling systems, fan coil systems, radiators and convectors. Depending on the model selected, it can be controlled by either a low or line voltage SPST or SPDT or floating controller such as a room thermostat, Aquastat control, or flow switch.

- Two-way or three-way valves.
- Minimal actuator power consumption.
- Double insulated actuator.
- Quick-connect or one-meter cable electrical connections available.
- Safe for use with potable water.
- Quick and easy replacement of moving parts.
- Actuator head installation does not require draining the system.
- On/Off models with six second nominal timing (floating/modulating models available with 120 second timing).

Dimensions, Approximate: 4 3/8 in high x 2 3/4 in wide x 3 1/2 in long (113 mm high x 68 mm wide x 94 mm long)
Coupling Controller: Integral
Controller Compatibility: 24V SPST, Series 80
Aux Switch Ratings: 24 Vac, 2.2A pilot duty, Class 2, SPST
Timing: 6 sec
Control Signal: 24 Vac on-off
Electrical Connections: Color-coded 40 in. (1 meter) cable
Voltage: 24V

Frequency: 60 Hz
Power Supply Rating: 6 VA, spst
Differential (close-off) Pressure Rating: 60 psi (4 Bar)
Static Pressure Rating: 300 psi (20 Bar)
Medium Temperature Range: 34 F to 203 F (1 C to 95 C)
Ambient Temperature Range: 32 F to 140 F (0 C to 60 C)
Shipping Temperature Range: -40 F to +150 F (-40 C to +65 C)
Comments: Use with max. 50% glycon in water solution.

Product Number	Capacity (Cv)	Capacity (Kvs)	Flow Characteristic	Pipe Size (inch)	End Fitting
VC8715AM1000	5.8 Cv	5.0 Kvs	Quick Open	3/4 in.	Sweat
VC8715AS1000	7 Cv	6.0 Kvs	Quick Open	1 in.	Sweat

CV-1 to CV-10

Transformers

AT20; AT40 NEMA Standard Universal Stripped-Down Transformer

Power a 24V control system; for direct mounting, or horizontal or vertical foot-mounting.

- Channel frame mounting feet and slots allow for the three mounting positions.
- Color-coded leadwires for primary connections.
- Overload protection provided.
- Energy limiting, meet NEMA DC20-1992 Standard. Marked NEMA Type D.
- Meet NEC Class 2 not wet, Class 3 wet and U.L. 1585 requirements.
- Mount within proper enclosure.

Temperature Rating: -20 F to +105 F (-29 C to +41 C)
Frequency: 50 Hz; 60 Hz
Electrical Connections (main)
(Primary) (inch): 9 in. color coded primary and secondary leadwires
(Primary) (mm): 229 mm color coded primary and secondary leadwires
(Secondary) (inch): 9 in. color coded primary and secondary leadwires
(Secondary) (mm): 229 mm color coded primary and secondary leadwires.
Approvals:
Canadian Standards Association: Certified
Underwriters Laboratories, Inc. UL Component Recognized.

	Product Number	Dimensions, Approximate (inch)	Dimensions, Approximate (mm)	Electrical Ratings: Primary Voltage	Electrical Ratings: Secondary Voltage	Electrical Ratings: Output	Mounting	NEMA Rating
*	AT20A1123	2 in. high x 2 1/4 in. wide x 1 7/8 in. deep	50.8 mm high x 57 mm wide x 47.6 mm deep	120 Vac	26.5 V.O.C.	24 Vac at 19 VA	Channel Frame Mounting allows for Direct, Horizontal, or Vertical Foot mounting.	NEMA type B
	AT40A1162	2 3/32 in. high x 2 5/8 in. wide x 2 3/16 in. deep	53 mm high x 67 mm wide x 56 mm deep	120 Vac	26.5 V.O.C.	24 Vac at 40 VA	Channel Frame Mounting allows for Direct, Horizontal, or Vertical Foot mounting.	NEMA type D

** TRADELINE models • SUPER TRADELINE models*

Piping and Plumbing Specialties

Ball Valves for Shut-off Applications

B100 Bronze Ball Valve for Shutoff Applications

Fully Ported Bronze Ball Valves for most heating, plumbing and industrial shut-off applications.

- Broad temperature and pressure ratings for wide range of applications-water, oil and steam service.
- Cast bronze (85-5-5) is ideal for applications requiring low zinc content.
- Fully ported bronze ball valves have higher flow rates with less turbulence, noise and pressure drop than reduced or standard port ball valves.
- Easy installation.
- Two-piece cast bronze body provides strength and resistance to corrosion.
- Bottom-loaded, blow-out proof stem with adjustable PTFE seal provides extended service life, durability and safety.
- Cushioned, corrosion-resistant steel handle makes operation easier.
- Meet Federal Specification WW-V-35C, Type II, Class A, Style 3 end connections A and C (threaded and solder).
- Not for use with natural or propane (LP) gas.
- Not for use in throttling applications.

Dimensions Diagram

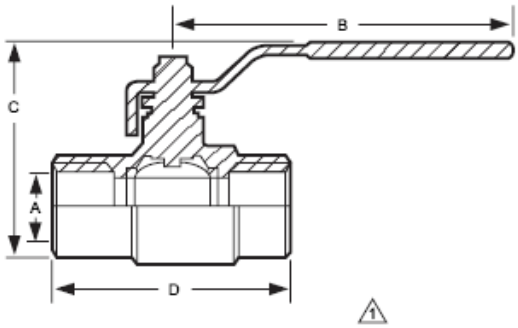

SIZE (INCHES)	A IN. (MM)	B IN. (MM)	C IN. (MM)	D IN. (MM) THREADED	D IN. (MM) SWEAT	C_V (2)
1/4	0.473 (12)	3.347 (85)	2.402 (61)	2.008 (51)	-	7.2
3/8	0.473 (12)	3.347 (85)	2.402 (61)	2.008 (51)	2.008 (51)	18.0
1/2	0.591 (15)	3.347 (85)	2.402 (61)	2.441 (62)	2.441 (62)	23.0
3/4	0.748 (19)	4.095 (104)	2.992 (76)	2.756 (70)	2.835 (72)	34.0
1	0.985 (25)	4.095 (104)	3.189 (81)	3.347 (85)	3.386 (86)	66.0
1-1/4	1.260 (32)	4.803 (122)	4.095 (104)	3.898 (99)	3.898 (99)	82.0
1-1/2	1.575 (40)	4.803 (122)	4.449 (113)	4.334 (110)	4.410 (112)	195.0
2	1.969 (50)	6.024 (153)	5.394 (137)	5.276 (134)	5.355 (136)	280.0
2-1/2	2.362 (60)	7.874 (200)	6.732 (171)	5.591 (142)	6.299 (160)	370.0
3	2.992 (76)	11.024 (280)	8.858 (225)	7.007 (178)	7.874 (200)	460.0
4	3.740 (95)	11.024 (280)	10.315 (262)	8.268 (210)	9.921 (252)	750.0

(1) END-TO-END DIMENSIONS ARE APPROXIMATE.

(2) Cv IS gpm WITH A 1 psi PRESSURE DROP AT 60 F. M3184B

Pressure Ratings

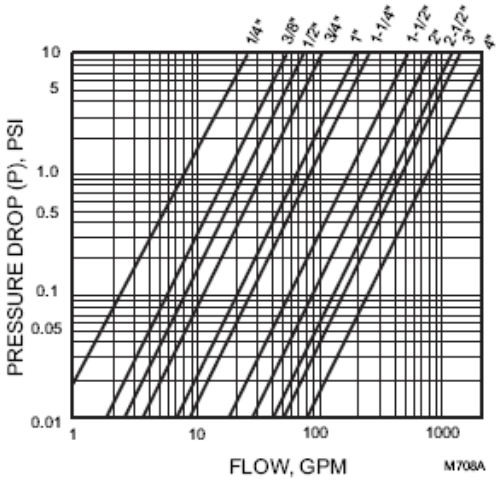

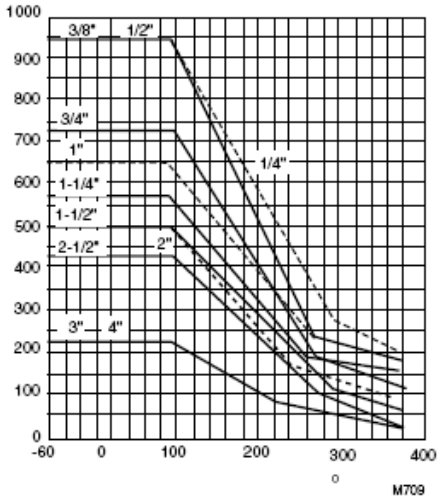

Replaces: Apollo, Grinnell, Hammond, Legend, Kitz, Nibco, and Watts.
Handle Type: Zinc plated steel with vinyl cover
Gas Approvals: No
Gas Rated: No
Application Type: Fully ported, bronze ball valves for most heating, plumbing and industrial applications.
Port Size: Full

Temperature Range: -60 F to +380 F
Materials
(Body): Cast Bronze
(Seat): PTFE
(Stem): Brass
(Plug/Ball/Disc): Brass, chrome plated
(Packing): PTFE

Ball Valves for Shut-off Applications

Replacement Parts:

3008300 Replacement handle for 3/8 in. and 1/2 in. B100 series valves
3008301 Replacement handle for 3/4 in. and 1 in. B100 series valves
3008302 Replacement handle for 1 1/4 in. and 1 1/2 in. B100 series valves
272790 Yellow plastic coated steel lever for B200 1/2 and 3/4 inch, includes Hex nut
3008303 Replacement handle for 2 in. B100 series valves
3008304 Replacement handle for 2 1/2 in. B100 series valves
3008305 Replacement handle for 3 in. B100 series valves
3008306 Replacement handle for 4 in. B100 series valves

	Pipe Size				Maximum Operating Pressure	
Product Number	(inch)	DN	Connection Type	Capacity (Cv)	(psi)	(kPa)
B100S5012	3/8 in.	DN10	Sweat	18 Cv	500 psi	3447 kPa
B100S5020	1/2 in.	DN15	Sweat	23 Cv	500 psi	3447 kPa
B100S5028	3/4 in.	DN20	Sweat	34 Cv	500 psi	3447 kPa
B100S5036	1 in.	DN25	Sweat	66 Cv	500 psi	3447 kPa
B100S5044	1 1/4 in.	DN32	Sweat	82 Cv	500 psi	3447 kPa
B100S5052	1 1/2 in.	DN40	Sweat	195 Cv	500 psi	3447 kPa
B100S5060	2 in.	DN50	Sweat	280 Cv	500 psi	3447 kPa
B100S5078	2 1/2 in.	DN65	Sweat	370 Cv	400 psi	2458 kPa
B100S5086	3 in.	DN80	Sweat	460 Cv	400 psi	2458 kPa
B100S5094	4 in.	DN100	Sweat	750 Cv	400 psi	2458 kPa
B100T1001	1/4 in.	DN5	NPT Threaded	7.2 Cv	500 psi	3447 kPa
B100T1009	3/8 in.	DN10	NPT Threaded	18 Cv	500 psi	3447 kPa
B100T1017	1/2 in.	DN15	NPT Threaded	23 Cv	500 psi	3447 kPa
B100T1025	3/4 in.	DN20	NPT Threaded	34 Cv	500 psi	3447 kPa
B100T1033	1 in.	DN25	NPT Threaded	66 Cv	500 psi	3447 kPa
B100T1041	1 1/4 in.	DN32	NPT Threaded	82 Cv	500 psi	3447 kPa
B100T1049	1 1/2 in.	DN40	NPT Threaded	195 Cv	500 psi	3447 kPa
B100T1057	2 in.	DN50	NPT Threaded	280 Cv	500 psi	3447 kPa
B100T1068	2 1/2 in.	DN65	NPT Threaded	370 Cv	400 psi	2458 kPa
B100T1076	3 in.	DN80	NPT Threaded	460 Cv	400 psi	2458 kPa
B100T1084	4 in.	DN100	NPT Threaded	750 Cv	400 psi	2458 kPa

FY32 Y-Strainer

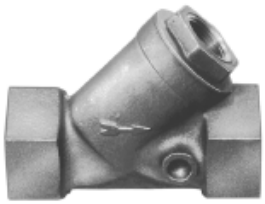

Bronze Y - pattern strainers protect regulators, pumps, meters and other controls and equipment from damage due to sediment, scale, metal chips or other foreign materials.

- For use with water, steam, oil, air and gas.
- Includes blow-off tapped cap (closure plug not supplied).
- Minimum pressure loss, even with 50 percent clogged screen.
- Corrosion-resistant bronze body and cap, with 18 mesh stainless steel screen.

Dimensions Diagram

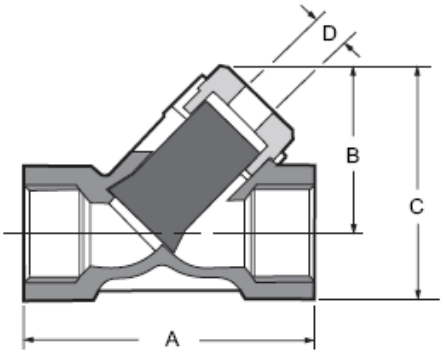

SIZE (IN.)	A		B		C		D PLUG TAP (NPT)	WEIGHT (LBS. (KG))
	THREADED	SWEAT	THREADED	SWEAT	THREADED	SWEAT		
3/8	2-11/32 (60)	—	1-5/16 (33)	—	1-13/16 (46)	—	1/4	0.50 (0.23)
1/2	2-25/32 (71)	2-3/4 (70)	1-3/8 (36)	1-3/8 (36)	1-31/32 (50)	1-13/16 (46)	1/4	0.50 (0.23)
3/4	3-5/32 (80)	3-11/32 (85)	1-11/16 (42)	1-11/16 (42)	2-13/32 (61)	2-3/16 (56)	1/4	0.75 (0.34)
1	3-23/32 (94)	3-25/32 (96)	2-1/8 (54)	2-1/8 (54)	3-1/32 (77)	2-13/16 (71)	1/2	1.25 (0.57)
1-1/4	4-13/32 (112)	4-9/16 (116)	2-1/2 (63)	2-1/2 (63)	3-5/8 (92)	3-5/16 (84)	1/2	2.00 (0.91)
1-1/2	4-27/32 (123)	5-9/32 (134)	3 (76)	3 (76)	4-1/4 (108)	3-15/16 (100)	3/4	2.50 (1.13)
2	5-29/32 (150)	6-1/16 (154)	3-5/8 (91)	3-21/32 (93)	5-3/16 (132)	4-7/8 (123)	1	4.50 (2.04)

M2562A

Connection Type: Sweat
Screen Mesh: 24
Materials: Body: cast bronze; Cap: cast bronze; Screen: T-304 stainless steel
Plug Tap (NPT): 1/4 NPT
Includes: Blow-off Tapped Cap

Replacement Parts:
QF32E1003 Replacement Screen, 18 mesh, 1/2 in. size.
QF32E1011 Replacement Screen, 18 mesh, 3/4 in. size.
QF32E1019 Replacement Screen, 18 mesh, 1 in. size.
QF32E1027 Replacement Screen, 18 mesh, 1 1/4 in. size.
QF32E1035 Replacement Screen, 18 mesh, 1 1/2 in. size.
QF32E1043 Replacement Screen, 18 mesh, 1 2 in. size.

Product Number	Pipe Size (inch)	DN	Capacity (Cv)	Pressure and Temperature Ratings (Water, Oil, Gas) (F)	(Steam) (F)	(Water, Oil, Gas) (C)	(Steam) (C)
FY32S6013	1/2 in.	DN15	4.6 Cv	500 psi @ 150 F	150 psi @ 338 F	500 psi @ 66 C	150 psi @ 170 C
FY32S6021	3/4 in.	DN20	7.9 Cv	500 psi @ 150 F	150 psi @ 338 F	500 psi @ 66 C	150 psi @ 170 C
FY32S6039	1 in.	DN25	11 Cv	500 psi @ 150 F	150 psi @ 338 F	500 psi @ 66 C	150 psi @ 170 C
FY32S6047	1 1/4 in.	DN32	18.5 Cv	500 psi @ 150 F	150 psi @ 338 F	500 psi @ 66 C	150 psi @ 170 C
FY32S6054	1 1/2 in.	DN40	28.2 Cv	500 psi @ 150 F	150 psi @ 338 F	500 psi @ 66 C	150 psi @ 170 C
FY32S6062	2 in.	DN50	36.6 Cv	500 psi @ 150 F	150 psi @ 338 F	500 psi @ 66 C	150 psi @ 170 C

TX Series Expansion Tanks—ASME Construction for Portable Water

The Honeywell Thermal Expansion Absorber is a welded, pressurized expansion tank with a butyl diaphragm to control excess pressure in potable hot water systems. The Thermal Expansion Tank controls pressure build-up in the system, eliminates relief valve spillage, protects fixtures and extends water heater life.

- Heavy duty butyl rubber diaphragm (FDA approved) isolates water from air.
- Polypropylene liner, 100% non-metallic, non-corrosive water reservoir.
- Full size range: 2-528 gals., for all water heating volumes (ASME available).
- Prevents water hammer.
- Maintenance free.
- Protects water heater from harmful pressure cycling.
- Allows storage of expanded water with no increase in system pressures.

Maximum Operating Temperature: 200 F (93 C)
Maximum Operating Pressure: 150 psi (1034 kPa)
Precharge: 40 psi

Materials: Shell: Steel
Diaphragm: Butyl
Connection: Stainless Steel
Liner: Polypropylene
Comments: ASME Construction

Product Number	Connection Size (inch)	Connection Type	Diameter		Height		Volume		Maximum Acceptance Volume		Weight	
			(inch)	(mm)	(inch)	(mm)	(gal)	(L)	(gal)	(L)	(lb)	(kg)
TX-120V-C	—	NPT Female	24 in.	609.6 mm	47 3/4 in. high	1213 mm high	66 gal	249.8 L	33 gal	124.9 L	258 lb	117.1 kg
TX-180V-C	1 1/4 in.	NPT Female	24 in.	609.6 mm	52 5/8 in. high	1338 mm high	77.0 gal	291.5 L	33.9 gal	128.3 L	255 lb	115.67 kg
TX-20V-C	3/4 in.	NPT Male	24 in.	609.6 mm	47 3/4 in. high	1213 mm high	7.6 gal	28.8 L	3.2 gal	12.1 L	258 lb	117 kg
TX-210V-C	1 1/4 in.	NPT Female	24 in.	609.6 mm	60 in. high	1524 mm high	88.0 gal	333.1 L	34.3 gal	129.8 L	295 lb	133.81 kg
TX-30V-C	3/4 in.	NPT Male	16 1/4 in.	412.8 mm	17 1/4 in. high	438 mm high	12.5 gal	47.3 L	10.0 gal	37.9 L	84 lb	38.10 kg
TX-42V-C	3/4 in.	NPT Male	16 1/4 in.	412.8 mm	24 1/4 in. high	616 mm high	17.5 gal	66.2 L	11.4 gal	43.2 L	98 lb	44.45 kg
TX-447-C	2 in.	NPT Female	24 in.	609.6 mm	60 in. high	1524 mm high	53.0 gal	200.6 L	34.5 gal	130.6 L	263 lb	119.4 kg
TX-448-C	2 in.	NPT Female	24 in.	609.6 mm	46 in. high	1168 mm high	80.0 gal	302.8 L	52 gal	196.8 L	308 lb	139.8 kg
TX-449-C	2 in.	NPT Female	24 in.	609.6 mm	60 in. high	1524 mm high	106.0 gal	401.2 L	69 gal	261.2 L	353 lb	160.3 kg
TX-450-C	2 in.	NPT Female	24 in.	609.6 mm	74 in. high	1880 mm high	132.0 gal	499.6 L	86 gal	325.5 L	391 lb	177.5 kg
TX-451-C	2 in.	NPT Female	30 in.	762.0 mm	74 1/2 in. high	1892 mm high	158.0 gal	598 L	103 gal	389.86 L	626 lb	283.95 kg
TX-452-C	2 in.	NPT Female	30 in.	762.0 mm	92 1/2 in. high	2349.5 mm high	211.0 gal	798.64 L	137 gal	518.55 L	760 lb	344.74 kg
TX-453-C	3 in.	NPT Female	36 in.	914.4 mm	85 5/8 in. high	2175 mm high	264.0 gal	999.24 L	172 gal	651.02 L	810 lb	367.42 kg
TX-454-C	3 in.	NPT Female	36 in.	914.4 mm	98 in. high	2490 mm high	317.0 gal	1199.85 L	206 gal	779.71 L	914 lb	414.59 kg
TX-455-C	3 in.	NPT Female	36 in.	914.4 mm	110 3/8 in. high	2803.5 mm high	370.0 gal	1400.45 L	241 gal	912.19 L	1018 lb	461.76 kg
TX-456-C	3 in.	NPT Female	48 in.	1219.2 mm	81 7/8 in. high	2080 mm high	422.0 gal	1597.27 L	275 gal	1040.88 L	1655 lb	750.71 kg
TX-457-C	3 in.	NPT Female	48 in.	1219.2 mm	95 3/4 in. high	2432 mm high	528.0 gal	1998.48 L	344 gal	1302.04 L	1925 lb	873.18 kg
TX-5-C	3/4 in.	NPT Male	10 in.	254.0 mm	10 3/8 in. high	263.5 mm high	2.0 gal	7.6 L	0.86 gal	3.26 L	21 lb	9.53 kg

GoldTop™—Universal Air Vent for Residential and Commercial Heating and Cooling Systems.

Installers, wholesalers and OEM's can now stock one vent for all their venting needs between 1 and 150 psi systems and obtain the highest venting performance. Honeywell has reinvented the vent! Air vents have been removing air from heating and cooling systems for decades. Some were better than others. Many stopped venting after initial filling. No one has, up to now, been able to design a low cost vent that performs at both low and high pressures. It was always one or the other. Honeywell's revolutionary patented fulcrum design offers a venting rate of 3-4 times that of other products. It works when others stop venting at higher pressures. The GoldTop offers convenient, one-fits-all concept and is competitively priced.

- Patent No. 5,988,201.

Application: Residential or commercial heating an cooling systems
Materials (Body): Brass
Maximum Operating Temperature: 240 F (115 C)
Maximum Operating Pressure: 150 psi (1034 kPa)

Product Number	Size (inch)	Dimensions, Approximate (inch)	Dimensions, Approximate (mm)	Connection Type	Connection Size	Weight (lb)	Weight (kg)	Description
FV180	1/8 in.	1 27/32 in. high x 3 1/4 in. long	24 mm high x 83 mm long	NPT	1/8 In.	0.4 lb	0.18 kg	1/8 in. NPT Goldtop Universal Air Vent for heating and cooling systems
FV180A	1/4 in.	1 27/32 in. high x 3 1/4 in. long	24 mm high x 83 mm long	NPT	1/4 in.	0.4 lb	0.18 kg	1/4 in. NPT Goldtop Universal Air Vent for heating and cooling systems
FV183	3/4 in.	1 27/32 in. high x 3 1/4 in. long	24 mm high x 83 mm long	NPT	3/4 in.	0.4 lb	0.18 kg	3/4 in. NPT Goldtop Universal Air Vent for heating and cooling systems

Hygrovent—Automatic Vent for Hot Water or Steam

The Honeywell Hygrovent is an automatic air vent for hot water and steam systems. Install in baseboards, radiators, convectors and high points in piping systems to remove air. The nickel-plated valve has a quick venting design and a positive shut-off ball check.

Application: Hot water or steam
Materials (Body): Nickel Plated
Maximum Operating Temperature: 240 F (115 C)
Maximum Operating Pressure: Water: 125 psi; Steam: 10 psi

Product Number	Size (inch)	Dimensions, Approximate (inch)	Dimensions, Approximate (mm)	Connection Type	Connection Size	Weight (lb)	Description
HV190	1/8 in.	1 27/32 in. high x 3 1/4 in. long	24 mm high x 83 mm long	NPT	1/8 In.	0.6 lb	1/8 in. NPT Automatic Air Vent for hot water or steam

SuperVent™ Air Eliminator- Eliminates Air from Hydronic Heating Systems without Bleeding

How it works

Conventional automatic air vents installed in Hydronic heating systems can leak and cause inefficient system operation. To effectively eliminate air from the system without bleeding, air bubbles ned to be vented. The NEW Honeywell SuperVent purges air through a no clog vent assembly that controls dirt and debris to minimize air vent fouling.

- No clog vent.
- Dirt and Debris resistant.
- 360 degree adjustable collar ring for installation flexibility.
- Stainless steel concentrator which eliminates gurgling noise.
- Bronze body for rigid construction.
- Threaded and sweat connections.
- PVU Models for vertical riser applications.
- Patent No. 5,490,874

Application: Residential or Commercial Zoning for hot water heating or chilled water air conditioning systems, fan coil units or indirect water heater service.
Materials (Body): Bronze
Maximum Operating Temperature: 240 F (115 C)
Maximum Operating Pressure: 125 psi (862 kPa)

Product Number	Size (inch)	Maximum Diameter (inch)	Maximum Diameter (mm)	Dimensions, Approximate (inch)	Dimensions, Approximate (mm)	Connection Type	Connection Size	Capacity (Cv)	Weight (lb)
PV075	3/4 in.	1 13/16 in.	46 mm	6 29/32 in. high x 2 11/16 in. long	176 mm high x 68 mm long	NPT	3/4 in.	13 Cv	2 lb
PV075S	3/4 in.	1 13/16 in.	46 mm	6 29/32 in. high x 3 3/16 in. long	176 mm high x 81 mm long	Sweat	3/4 in.	13 Cv	2 lb
PV100	1 in.	2 3/32 in.	53 mm	6 1/2 in. high x 3 3/32 in. long	192 mm high x 79 mm long	NPT	1 in.	22 Cv	2.75 lb
PV100S	1 in.	2 3/32 in.	53 mm	6 1/2 in. long x 3 11/16 in. wide	192 mm long x 94 mm wide	Sweat	1 in.	22 Cv	2.75 lb
PV125	1 1/4 in.	2 1/2 in.	64 mm	7 27/32 in. high x 3 11/16 in. long	199 mm high x 94 mm long	NPT	1 1/4 in.	38 Cv	3.5 lb
PV125S	1 1/4 in.	2 1/2 in.	64 mm	7 27/32 in. high x 4 13/32 in. long	199 mm high x 112 mm long	Sweat	1 1/4 in.	38 Cv	3.5 lb
PV150	1 1/2 in.	3 3/32 in.	79 mm	9 5/32 in. high x 4 5/16 in. long	233 mm high x 110 mm long	NPT	1 1/2 in.	50 Cv	5.2 lb
PV200	2 in.	4 in.	102 mm	10 9/32 in. high x 5 3/16 in. long	261 mm high x 132 mm long	NPT	2 in.	95 Cv	8 lb
PVU075	3/4 in.	1 13/16 in.	46 mm	7 9/32 in. long x 2 11/16 in. wide	185 mm long x 68 mm wide	Universal NPT	3/4 In. with 3/4 In. Bottom inlet	3.6 Cv	2.1 lb
PVU100	1 in.	2 3/32 in.	53 mm	7 27/32 in. high x 4 13/32 in. long	199 mm high x 112 mm long	Universal NPT	1 In. with 1 In. Bottom inlet	6.2 CV	2.8 lb
PVU125	1 1/4 in.	2 1/2 in.	64 mm	8 1/4 in. high x 3 11/16 in. long	212 mm high x 94 mm long	Universal NPT	1 1/4 In. with 1 1/4 In. Bottom inlet	10.5 Cv	3.6 lb
PVU150	1 1/2 in.	3 3/32 in.	79 mm	9 13/32 in. high x 4 5/16 in. long	239 mm high x 110 mm long	Universal NPT	1 1/2 In. with 1 1/2 In. Bottom inlet	14.3 Cv	5.2 lb

Backflow Preventers

Backflow Preventers—Dual Check for Domestic water

Backflow Preventers-Dual Check for Domestic water

- Dual Check Valves may be installed in either a vertical or horizontal position and should be installed immediately down stream of the water meter.

Dimensions, Approximate: 4 3/8 in. long x 2 1/8 in. wide (111 mm long x 54 mm wide)
Connection Type: NPT
Maximum Ambient Temperature: 180 F (82 C)
Maximum Operating Pressure: 150 psi(1034 kPa)
Approvals:
ASSE: Certified

Product Number	Connection Size (inch)	Connection Size DN	Description	Weight (lb)	Weight (kg)
BP700	3/4 in.	DN20	Dual check 3/4 in. NPT	1.0 lb	0.45 kg
BP701	1 in.	DN25	Dual Check 1 in. NPT	1.4 lb	0.64 kg

AMX Series DirectConnect™ Thermostatic Mixing Valves

Patented DirectConnect design reduces installation time. Orientation of cold and hot ports eliminates need for elbows and tees on typical water heater installations. Added Safety designed to prevent scalding. Increased user comfort for more available hot water.Designed to be directly installed on water heater hot outlet port.

- Constant water temperature under different operating conditions
- Proportional valve (control of hot and cold water)
- Flow reduction in seconds if cold water supply is interrupted
- Temperature adjustable using 3/16 allen wrench (supplied)
- Union nuts/tail pieces included
- Heat trapping not required
- Recirculation port option for fast response
- Integral check valve on cold port
- Brass/stainless construction
- Teflon coated wear surfaces for extended service
- Thermostrip included for initial temperature setting
- ASSE 1017 certified, CSA & IAPMO approved.
- U.S. Patent pending

Application: Heat Pump Systems, Domestic water, Nursing homes, Public facilities, Automatic faucets, Radiant floor heating, Space heating, Combo systems, Solar hot water, Greenhouses, Industrial applications, Photo processing

Dimensions Diagram

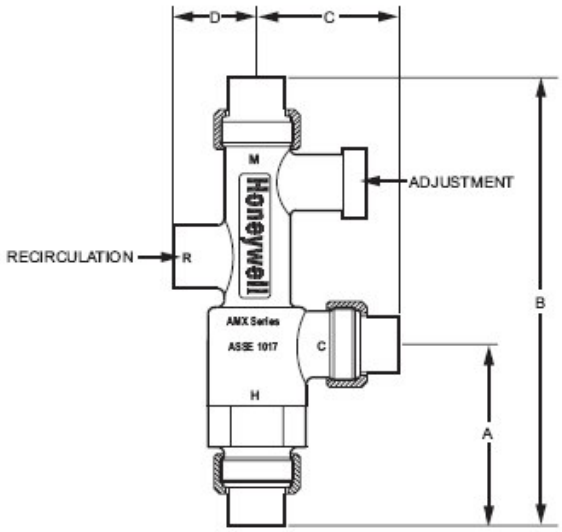

Product Number	Dimensions (inches)			
	A	B	C	D
AMX100-US-1	3.5	8.2	2.5	1.5
AMX101-US-1	4.2	9.0	2.5	1.5
AMX102-US-1	4.5	10.0	3.5	1.5
AMX100-UT-1	3.5	8.2	2.7	1.5
AMX101-UT-1	4.2	9.7	3.5	1.5
AMX102-UT-1	4.5	10.0	3.7	1.5
AMX100-UCPVC-1	3.5	8.6	2.7	1.5
AMX101-UCPVC-1	4.2	9.2	2.7	1.5
AMX100-UC-1	3.5	9.5	3.7	1.5
AMX101-UC-1	4.2	10.0	3.7	1.5
AMX-001RP	—	—	—	—

M23260

Product Number	Pipe Size (inch)	Pipe Size DN	Connection Type	Capacity (Cv)	Operating Temperature Range (F)	Operating Temperature Range (C)	ASSE
AMX100-UC-1	1/2 in.	DN15	Union Compression	4.0 Cv	90 F to 130 F	32 C to 54 C	1017 (90 F to 130 F)
AMX100-UCPVC-1	1/2 in.	DN15	CPVC Union Coupling	4.0 Cv	90 F to 130 F	32 C to 54 C	1017 (90 F to 130 F)
AMX100-US-1	1/2 in.	DN15	Union Sweat	4.0 Cv	90 F to 130 F	32 C to 54 C	1017 (90 F to 130 F)
AMX100-UT-1	1/2 in.	DN15	Union NPT	4.0 Cv	90 F to 130 F	32 C to 54 C	1017 (90 F to 130 F)
AMX101-UC-1	3/4 in.	DN20	Union Compression	4.0 Cv	90 F to 130 F	32 C to 54 C	1017 (90 F to 130 F)
AMX101-UCPVC-1	3/4 in.	DN20	CPVC Union Coupling	4.0 Cv	90 F to 130 F	32 C to 54 C	1017 (90 F to 130 F)
AMX101-US-1	3/4 in.	DN20	Union Sweat	4.0 Cv	90 F to 130 F	32 C to 54 C	1017 (90 F to 130 F)
AMX101-UT-1	3/4 in.	DN20	Union NPT	4.0 Cv	90 F to 130 F	32 C to 54 C	1017 (90 F to 130 F)
AMX102-US-1	1 in.	DN25	Union Sweat	4.0 Cv	90 F to 130 F	32 C to 54 C	1017 (90 F to 130 F)
AMX102-UT-1	1 in.	DN25	Union NPT	4.0 Cv	90 F to 130 F	32 C to 54 C	1017 (90 F to 130 F)
AMX101-USMT-1	3/4 in.	DN20	Union Threaded & Sweat	4.0 Cv	90 F to 130 F	32 C to 54 C	1017 (90 F to 130 F)

FlexTherm®
Seam-Seal

Protected by the Bio-Guard™ System

Self-Seal Pipe Insulation
Flexible Closed Cell Insulation

Made in America
Designed for the Plumbing Industry

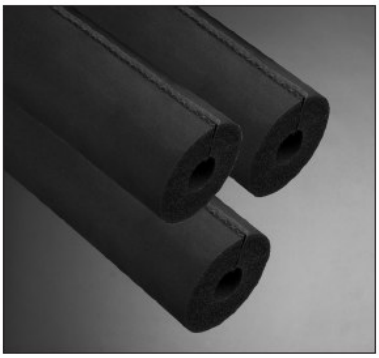

DESCRIPTION
FlexTherm® Seam-Seal Pipe Insulation is an environmentally friendly, CFC-free, flexible elastomeric insulation, pre-slit with a factory-applied pressure sensitive adhesive. It is black in color and identified as FlexTherm® Seam-Seal. This superior closed cell insulation is designed to retard heat flow and prevent condensation when properly installed. FlexTherm® Seam-Seal Pipe Insulation is pre-slit with a factory applied specially formulated bonding adhesive applied to both seam surfaces and comes with convenient built-in release liners which allow for easy installation. It is available in wall thicknesses of 3/8" through 1" and in sizes ranging from 3/8" to 4" IPS. It is non-porous, non-fibrous and resists mold growth. The Bio-Guard™ antimicrobial system provides added protection against mold, fungal and bacterial growth. The active ingredient in Bio-Guard™ is registered with the EPA.

APPLICATIONS
FlexTherm® Seam-Seal has the same excellent insulation properties as standard FlexTherm® Pipe Insulation and is used on similar applications such as hot and cold water plumbing. FlexTherm® Seam-Seal is recommended for applications ranging from -70°F to 200°F (-57°C to 93°C) for both new and existing applications. For best results, store and install FlexTherm® Seam-Seal at temperatures above 40°F (4°C).

FlexTherm® Seam-Seal's self-seal closure system is designed to save labor costs, particularly on straight runs. It greatly reduces the use of contact adhesives, thus allowing for improved working conditions and compliance with OSHA requirements. FlexTherm® Seam-Seal can be used with heat tracing/heat tapes.

INSTALLATION
FlexTherm® Seam-Seal is pre-slit with convenient built-in tabs for easy installation: slip on the tube, pull the tab, pinch it shut and apply pressure to the seams. The seam should be positioned to be on the bottom of the pipe. See technical bulletin for installation instructions in cold temperatures.

All butt joints must be sealed with an approved contact adhesive. Fittings are fabricated from miter-cut tubular sections or from FlexTherm® Sheet Insulation.

OUTDOOR APPLICATIONS
FlexTherm® Seam-Seal Pipe Insulation is made from a UV resistant elastomeric blend. For moderate UV exposure, no additional protective coating needed. However, for severe UV exposure (rooftop applications) or where optimum performance is required, R-374 Protective Coating or approved jacketing or cladding should be used. For best appearance, two coats are recommended. *For more detailed information refer to the Installation Guidelines.*

FEATURES & BENEFITS
FlexTherm® Seam-Seal offers the advantage of easier handling & installation

- Faster install
- Ideal for straight runs
- Less use of contact adhesives

RESISTANCE TO MOISTURE VAPOR FLOW
The closed-cell structure and unique formulation of FlexTherm® Seam-Seal effectively retards the flow of moisture vapor, and is considered a low transmittance vapor retarder. For most indoor applications, FlexTherm® Seam-Seal needs no additional protection.

Additional vapor barrier protection may be necessary for FlexTherm® Seam-Seal when installed on low temperature surfaces that are exposed to continuous high humidity.

FLAME AND SMOKE RATING
FlexTherm® Seam-Seal Pipe Insulation in wall thicknesses up to 1" (25 mm) has a flame spread rating of 25 or less and a smoke development rating of 50 or less as tested by ASTM E 84 Method of Testing entitled: "Surface Burning Characteristics of Building Materials." FlexTherm® Seam-Seal Pipe Insulation is acceptable for use in duct/plenum applications meeting the requirements of NFPA 90A/B.

Numerical flammability ratings alone may not define the performance of products under actual fire conditions. They are provided only for use in the selection of products to meet limits specified, when compared to a known standard.

SPECIFICATION COMPLIANCE
ASTM C 534 Type 1 (Tubing), Grade 2
ASTM D 1056-00-2C1
New York City MEA 186-86-M Vol. IV
USDA Requirements

UL 94-5V Flammability Classification
(Recognition No. E300774)
ASTM E 84 1-1/2" 25/50-tested
according to UL 723 and NFPA 255
Complies with requirements of
CAN/ULC S102-03

FMRC 2006 Approval Guide
Chapter 14 Pipe Insulation

Meets requirements of NFPA 90A
Sect. 2.3.3 for Supplementary Materials for
Air Distribution Systems

Meets requirements of ASTM C 411
(Test Method for Hot Surface Performance of
High Temperature Thermal Insulation)

Meets requirements of UL 181
sections 11.0 and 16.0
(Mold Growth/Air Erosion)

FlexTherm® Seam-Seal Self-Seal Pipe Insulation

PRODUCT DATA

Physical Properties		FLEX-THERM SEAM-SEAL	Test Methods
Thermal Conductivity (K) BTU - in/hr - Ft^2 = °F (W/mK)	90°F (32°C) Mean Temp 75°F (24°C) Mean Temp 50°F (10°C) Mean Temp	.270 (.039) .265 (.038) .260 (.037)	ASTM C 177/C 518 ASTM C 177/C 518 ASTM C 177/C 518
Operating Temperature Range	Upper	200°F (93°C)	
	Lower	-70°F (-57°C)	
Water Vapor Permeability Dry Cup. Perm-In		<0.06	ASTM E 96
Water Absorption %		<0.20 by volume	ASTM C 209
Flame Spread (up to 1" wall)		Not greater than 25	ASTM E 84
Smoke Developed (up to 1" wall)		Not greater than 50	ASTM E 84
Ozone Resistance		Pass	ASTM D 1171
Chemical/Solvent Resistance		Good	
Mildew Resistance/Air Erosion		Pass	UL 181

Thickness Recommendations* - To Control Condensation

Pipe Size	Line Temp 50°F	10°C	Line Temp 35°F	2°C	Line Temp 0°F	-18°C	Line Temp -20°F	-29°C
Normal Conditions (Max 85°F, 29°C - 70% R.H.)								
3/8" I.D. thru 1-3/8" I.D.	3/8"	10 mm	1/2"	13 mm	3/4"	19 mm	1"	25 mm
Over 1-3/8" thru 3" IPS	3/8"	10 mm	1/2"	13 mm	1"	25 mm	1"	25 mm
Over 3" IPS thru 4" IPS	1/2"	13 mm	1/2"	13 mm	1"	25 mm	1-1/4"	32 mm
Mild Conditions (Max 80°F, 26°C - 50% R.H.)								
3/8" I.D. thru 2-1/8" I.D.	3/8"	10 mm	3/8"	10 mm	1/2"	13 mm	1/2"	13 mm
Over 2-1/8" thru 3" IPS	3/8"	10 mm	3/8"	10 mm	1/2"	13 mm	3/4"	19 mm
Over 3" IPS thru 4" IPS	1/2"	13 mm	1/2"	13 mm	3/4"	19 mm	3/4"	19 mm
Severe Conditions (Max 90°F, 32°C - 80% R.H.)								
3/8" I.D. thru 1-1/8" I.D.	3/4"	19 mm	3/4"	19 mm	1-1/4"	32 mm	1-1/4"	32 mm
Over 1-1/8" thru 4" IPS	3/4"	19 mm	1"	25 mm	1-1/2"	38 mm	1-1/2"	38 mm

*FlexTherm® Seam-Seal in thickness noted within the specified temperature ranges will prevent condensation in indoor piping under design conditions defined below. Thickness recommendations above 1" can be sleeved to achieve thickness desired.

Normal: Maximum severity of indoor conditions seldom exceed 850° F and 79% R.H. in United States.
Mild: Typical conditions are most air-conditioned spaces and arid climates.
Severe: Generally found in areas where excessive moisture is introduced or in poorly ventilated areas where the temperature may be depressed below the ambient. Under conditions of higher humidity, additional thickness of insulation may be required.

FLEX-THERM SEAM-SEAL "R" Values

Pipe O.D. or Normal Insulation I.D.		R Value 3/8" (10 mm) wall	R Value 1/2" (13 mm) wall	R Value 3/4" (19 mm) wall	R Value 1" (25 mm) wall
3/8"	10 mm	2.5	3.3	5.2	—
1/2"	13 mm	2.4	3.1	5.0	—
5/8"	16 mm	2.3	3.0	5.0	7.2
3/4"	19 mm	2.2	3.0	5.0	7.2
7/8"	22 mm	2.1	3.0	5.0	7.0
1-1/8"	29 mm	2.1	2.9	5.1	6.6
1-3/8"	35 mm	2.0	2.9	4.9	6.8
1-5/8"	41 mm	2.2	2.9	4.8	6.6
1-1/2"IPS	—	2.3	2.7	4.5	6.3
2-1/8"	54 mm	2.2	2.8	4.5	6.1
2" IPS	—	—	2.7	4.4	6.0
2-1/2" IPS	64 mm	—	2.8	4.3	5.9
2-5/8"	67 mm	—	2.7	4.3	5.8
3-1/8"	79 mm	—	2.7	4.1	5.6
3" IPS	—	—	3.0	4.2	5.7
3-5/8"	92 mm	—	2.8	4.1	5.5
4-1/8"	105 mm	—	3.0	4.1	5.4
4" IPS	—	—	2.8	4.4	5.6

Note: "R" factors were calculated using a K factor of .265 (75°F, 24°C mean temp.) and nominal wall thickness in each case. Lower operating temperatures will result in improved R values. Contact Technical Services for specific recommendations.

NOMACO K-FLEX

Nomaco K-Flex, 100 Nomaco Drive, Youngsville, North Carolina 27596 p 800-765-6475 f 800-765-6471

CU
554

ICBO Evaluation Report:	ICBO ES ER5142, ER4407
Temp & Pressure Ratings:	200°F at 80 psi, 180°F at 100 psi, and 73.4°F at 160 psi
Approvals:	IAPMO, ICBO,CSA, NSF, SBCCI
Codes:	IPC, NSPC, UPC

5925 W. 148th Street · Apple Valley, MN 55124
Tel 800 321 4739 · Fax 952 891 2008

CU
554

Copper Manifolds (with Brass Fittings and Ball Valves)

Copper manifolds are available in five styles, with or without ball valves. The ends of the manifold trunks are either open, closed, or supplied with ¾" crimp fittings. Manifolds are made of type "L" copper. **All fittings are brass and are brazed to the copper trunk.** Order copper CrimpRings™ separately.

Closed End x 1" Swedged End Manifolds

1" diameter manifold trunks are closed at one end and swedged to accept 1" copper at the other. Available with ⅜" and ½" brass CrimpRing™ fittings, with or without ¼-turn brass mini ball valves (MBV), in sizes from M3 to M12. Branches are 2" O.C. Manifolds are sold individually. Order one for hot and one for cold.

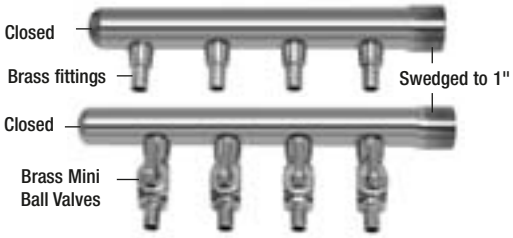

Model	Ordering Code/ UPC#	Description	Mstr Ctn	Pkg Weight (lbs)	List Price
WPCM1-M3-06	0650412 098268311563	3 Branch x ⅜" CF	1	2	$25.90
WPCM1-M4-06	0650413 098268311570	4 Branch x ⅜" CF	1	2	28.10
WPCM1-M6-06	0650414 098268311587	6 Branch x ⅜" CF	1	2	33.50
WPCM1-M8-06	0650415 098268311594	8 Branch x ⅜" CF	1	3	41.05
WPCM1-M10-06	0650416 098268311600	10 Branch x ⅜" CF	1	4	47.50
WPCM1-M12-06	0650417 098268311617	12 Branch x ⅜" CF	1	5	56.15
WPCM1-M3-08	0650424 098268311686	3 Branch x ½" CF	1	2	23.75
WPCM1-M4-08	0650425 098268311693	4 Branch x ½" CF	1	2	25.90
WPCM1-M6-08	0650426 098268311709	6 Branch x ½" CF	1	2	31.30
WPCM1-M8-08	0650427 098268311730	8 Branch x ½" CF	1	3	38.90
WPCM1-M10-08	0650428 098268311747	10 Branch x ½" CF	1	4	49.70
WPCM1-M12-08	0650429 098268311754	12 Branch x ½" CF	1	5	56.15
With Mini Ball Valves (MBV's)					
WPCM1-M3-06B	0650418 098268311624	3 Branch x ⅜" CF/MBV	1	3	51.85
WPCM1-M4-06B	0650419 098268311631	4 Branch x ⅜" CF/MBV	1	3	62.65
WPCM1-M6-06B	0650420 098268311648	6 Branch x ⅜" CF/MBV	1	4	84.25
WPCM1-M8-06B	0650421 098268311655	8 Branch x ⅜" CF/MBV	1	6	106.90
WPCM1-M10-06B	0650422 098268311662	10 Branch x ⅜" CF/MBV	1	8	129.60
WPCM1-M12-06B	0650423 098268311679	12 Branch x ⅜" CF/MBV	1	10	151.20
WPCM1-M3-08B	0650430 098268311761	3 Branch x ½" CF/MBV	1	3	58.30
WPCM1-M4-08B	0650431 098268311778	4 Branch x ½" CF/MBV	1	3	71.30
WPCM1-M6-08B	0650432 098268311785	6 Branch x ½" CF/MBV	1	4	95.05
WPCM1-M8-08B	0650433 098268311792	8 Branch x ½" CF/MBV	1	6	118.80
WPCM1-M10-08B	0650434 098268311808	10 Branch x ½" CF/MBV	1	8	139.30
WPCM1-M12-08B	0650435 098268311853	12 Branch x ½" CF/MBV	1	10	166.30

CU 556

Wirsbo AQUAPEX® Tubing

Uponor's Wirsbo AQUAPEX® tubing is an extremely uniform product with high temperature, pressure and chemical resistance.

Here's what you need to know about Wirsbo AQUAPEX:

- AQUAPEX is made from PEX (crosslinked polyethylene), a unique plastic tubing.
- It's a product you can trust.
- Tested and proven for over 30 years
- Durable, flexible and extremely reliable
- Maintenance-free
- 100-year life expectancy
- More than 11 billion feet of Uponor PEX tubing currently installed worldwide
- Backed by a 25-year warranty when installed by an Uponor-trained plumbing contractor in a plumbing or fire protection system, and a 30-year warranty when installed by a Home Comfort Team (HCT) member in a radiant floor heating system.

For those who want to know a little more:

- There are several different kinds of PEX tubing on the market and they are not all alike.
- Wirsbo AQUAPEX tubing has distinctive properties that make it ideal for plumbing and fire protection applications.
- The tubing is UL listed for use in residential fire protection systems.
- Uponor's exclusive ProPEX® fittings take advantage of the tubing's unique shape memory to make solid, permanent connections, minimizing the risks of leaks.

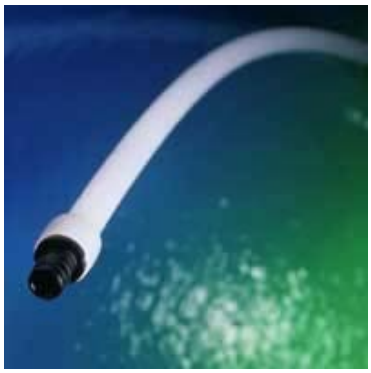

Wirsbo AQUAPEX Technical Data

Wirsbo AQUAPEX tubing has distinctive properties that make it ideal for plumbing and fire protection applications. The ½" Wirsbo AQUAPEX tubing is UL listed for use in residential fire protection systems.

Even though Wirsbo AQUAPEX does not have an oxygen diffusion barrier, it can be used in an open or open-loop heating system. Corrosive or ferrous components **CANNOT** be used in AQUAPEX circulating systems.

Brand Name:	Wirsbo AQUAPEX®
CSA Standard:	CSA B137.5 POTABLE
Dimensions:	1/4", 3/8", 1/2", 3/4",1", 1 1/4", 1 1/2"
Wall Thickness:	SDR 9
NSF Standard:	NSF-pw 14 and 61
UPC Standard:	UPC 3558, 3946, 3960
ASTM Standard:	ASTM F876/ F877/F1960/F1961/F1807
UL Fire Protection Standard:	UL 1821 (1/2" AQUAPEX only)

CU 556

Copper Manifolds (with Brass Fittings and Ball Valves)

Swedged Base Branch Manifolds - Open End x 1" Swedged End

These manifolds are swedged at one end and open at the other. They are supplied with ½" nominal brass base branch fittings to accept fittings or ball valves. Manifolds can be sweat together to make any combination needed.

Model	Ordering Code/ UPC#	Description	Mstr Ctn	Pkg Weight (lbs)	List Price
WPCM4-M2-08	0650460 098268312379	2 Branch x ½" Fitting	1	2	$18.35
WPCM4-M3-08	0650461 098268312386	3 Branch x ½" Fitting	1	3	20.10
WPCM4-M4-08	0650462 098268312393	4 Branch x ½" Fitting	1	2	21.60

CustomCut™ Copper Manifolds - 1 Trunk x 16 - Branch - 3" O.C. Fittings

CustomCuts™ are designed to be cut up in the field. Cut off five branches for a 5-branch manifold, seven for a 7-branch manifold, etc. All CustomCuts™ are 4' long with 16 fittings spaced 3" apart, so a pipe cutter can fit between the branches. CustomCuts™ come with or without MBVs, with either ⅜" crimp, fittings, ½" crimp fittings, or with ½" base branches to accept any type of ½" nominal crimp fitting or Watts Mini Ball Valve (MBV).

All fittings are brass.

Mini Ball Valve (MBV)

Model	Ordering Code/ UPC#	Description	Mstr Ctn	Pkg Weight (lbs)	List Price
WPCM5-M16-06	0650463 098268312409	16 Branch x ⅜" CF	1	7	92.90
WPCM5-M16-08	0650464 098268312416	16 Branch x ½" CF	1	7	88.55
WPCM6-M16-08	0650465 098268312423	16 Branch x ½" Base Branch Fitting	1	7	88.55
With Mini Ball Valves (MBV's)					
WPCM5-M16-06B	0650466 098268312430	16 Branch x ⅜" CF/MBV	1	14	341.30
WPCM5-M16-08B	0650467 098268312447	16 Branch x ½" CF/MBV	1	14	273.25
WPCM6-M16-08B	0650970 098268321319	16 Branch x ½" Base Branch Fitting w/MBV	1	14	276.50

Putting it Together.

Manifolds are the heart of the WaterPEX® plumbing system. Choosing the correct manifold is important. The photograph at left shows an example of a "flow-through" manifold configuration and some of the WaterPEX® components that make it work.

NOTE: All Watts copper manifolds are made with brass fittings and brass ball valves.

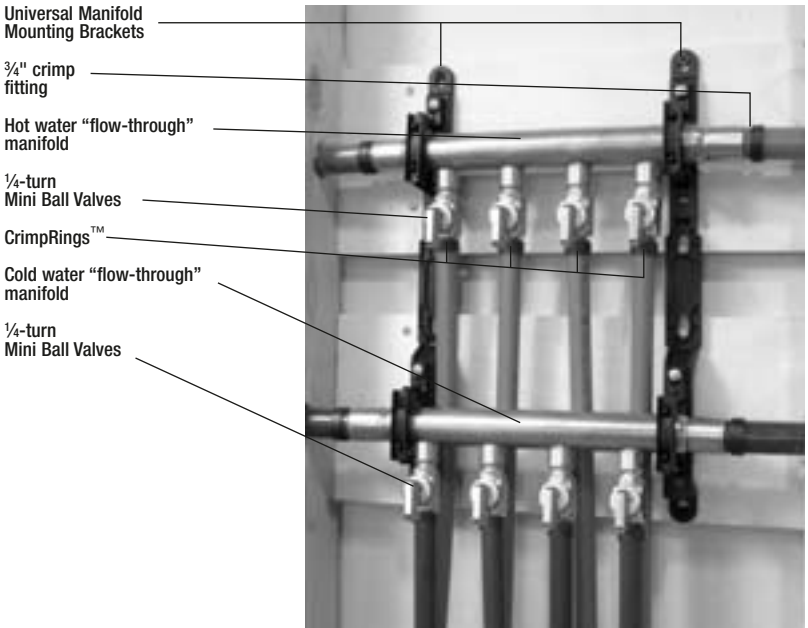

CUSD2007

electrical

BUILDING INTEGRATED PHOTOVOLTAIC MOUNTING SYSTEM

PHOTOVOLTAIC PANELS

ELECTRICAL COMPONENTS

ELECTRIC VEHICLE

Summary of UL Unlisted Components

SolRif PV Inroof System with SPR 215 laminates

Ernst Schweizer AG, Metallbau
CH-8908 Hedingen
Telefon +41 44 763 61 11
Telefax +41 44 763 61 19
info@schweizer-metallbau.ch
www.schweizer-metallbau.ch

Verkaufsbüros in:

Bern, Biel, Brugg, Chur,
Lausanne, Luzern,
Möhlin, Solothurn,
St. Gallen, Zürich

SOLRIF®XL: Description of the System

Authors: Haller Andreas / Helge Hartwig / Jochen Rasmussen
Date: July 5, 2006

Content

1 Introduction

1.1 In General

Scope of this information

This synopsis introduces the components involved in the in-roof installation of photovoltaic (PV) modules using the SOLRIF®XL framing system. Certain aspects of SOLRIF®XL are protected by patent. SOLRIF®XL is a protected trademark. SOLRIF®XL itself is the framing fixture for the PV modules (often referred to as “SOLRIF kit”); optional components for sealing the seams are described as well. Beyond this, we will discuss general planning. Neither the installation nor the wiring of the alternating current converter, nor the power supply is a part of the SOLRIF®XL system and thus not a part of this synopsis.

Framing PV laminates with the SOLRIF®XL framing system is discussed in the document “Technical Documentation / Framing / SOLRIF”. This document is to be found at www.solrif.de under the heading “Documentations → Directions for Framing the Laminates”. Following the directions exactly will ensure a waterproof roof element.

A calculating tool for the static calculation to determine the type and the number of clamps is available on request for SOLRIF®XL contracting parties.

This synopsis should be viewed as supplemental to the installation instructions.

Rainproof

The SOLRIF®XL roof is as rainproof as a conventional tile roof. This is not to say that a roof is waterproof! Certain conditions, such as a blizzard, a torrential downpour, or a stopped eaves gutter can lead to water permeating a roof. We therefore strongly urge the use of DINplus certified roofing sheet.

Roof Boarding and Ventilation

It is essential to observe the rules of the roofing trade when boarding the roof. Strengthening the ventilation of the roof by means of a counter rafter as well as ventilating openings at the ridge and the eaves increases the durability of the substructure. In addition, the ventilation of silicon modules is favorable to energy output.

Guarantee and Liability

Our “General Terms of Business and Delivery” are valid.

For PV modules with SOLRIF®XL framing profile, delivered by the Ernst Schweizer AG company, there is a 10 year guarantee for frame components and for the waterproof sealing between frame and laminate.

In principle there is no guarantee for such PV modules not framed and delivered by the Ernst Schweizer AG company, metal construction, CH-8908 Hedingen, Switzerland, or on behalf of Ernst Schweizer AG.

Sealing the seams with flashings from Ernst Schweizer AG or with flashings of the same patent guarantees a rainproof roof in the sense mentioned above. Guaranteeing rainproof seams is the responsibility of the craftsman hired for this purpose.

Ernst Schweizer AG guarantees neither the electrical function nor the efficiency of the PV modules.

In the event of injury or damage, guarantee and liability do not apply when caused by one or more of the following:

- Improper installation
- Installation without properly employed or properly functioning safety measures and safety devices
- Disregard of the directions in the installation manual
- Disregard of general electrical rules for direct current (DC) components
- Force majeure

1.2 Safety

Dangers in working with SOLRIF®XL

SOLRIF®XL has been developed in accordance with standard specifications and with established safety regulations. Where necessary, the corresponding certificates have been procured.

Nevertheless improper handling can imperil the health or the life of the user or of a third party, or can damage or disrupt the installation or other objects.

In order to avoid dangers PV modules framed with SOLRIF®XL should only be used

- for their intended purpose
- in an absolutely safe and perfect working order
- in strict adherence to the directions in the installation manual

Damages that present safety hazards should be repaired of immediately.

Workmanlike execution

Only qualified personnel should assemble PV modules with SOLRIF. Qualified personnel are persons familiar with installing and assembling our product and starting it up, as well as persons with roofing experience. The necessity of over voltage protection or lightning protection is to be determined individually in each specific case.

Organizational measures

- The necessary personal protective gear is to be worn by all persons during installation.
- All safety devices are to be tested at regular intervals.

Informal safety measures

- In addition to those guidelines in the installation manual, the safety rules and regulations in force in individual countries should be followed at all times. Particularly the relevant installation and safety regulations (e.g. DIN VDE 0100, VDEW guideline: 2001 plus supplements, VDI 6012, BGV A1, BGV A2, BGV C22) are to be followed.
- While working atop the roof the regulations of the Roofers' Trade Association (*Berufsgenossenschaftliche Regeln Dacharbeiten*, BGR 203), the Rules for Metalwork in the Roofing Trade (*Fachregeln für Metallarbeiten im Dachdeckerhandwerk*), as well as all other rules and regulations in force in the specific country are to be followed.

- When installing modules other than prefabricated modules with fastened cables and contact-safe plugs, the wiring of the DC circuit should be executed by qualified electro-technical personnel.

Disposal

- All materials used are, when the necessity arises, to be disposed of in a proper and environmentally responsible manner.
- All components of the SOLRIF®XL system are completely recyclable.

2 Technical Description of SOLRIF®XL

2.1 Field of Application

SOLRIF®XL makes the in-roof installation of solar power generators with a maximum thickness of 5.5 mm possible, especially for modules with a glass surface greater than 0.8 m^2 under standard conditions as well as for smaller modules with higher standards of wind suction safeguard.

Standard conditions

- Modules with a surface ≤ 1.35 m^2
- Buildings with sloped roofs ≤ 8 m ridge height
- Sloped roofs with an incline ≥ 25°
- Weight of snow less than 1.55 kN/m^2 [1]

Other conditions are technically possible, if necessary, with alterations to the substructure and additional anchoring. The statics can be estimated on request by Ernst Schweizer AG. There are in principle no minimal distances to ridge, skylight or eaves, but increased wind suction should be considered during calculation and planning.

Area weight

The area weight of SOLRIF®XL is, depending on the type of module, 12-15 kg per m^2 of the generator's surface area.

Energy Payback Time

The power demand for producing (raw materials and manufacture) a module frame is approximately 60 kWh for an 85 watt module. Assuming an output of 900 kWh/kWp there is an energy payback time of < 0.8 years. The PV module itself is not taken into account here.

2.2 Framed modules

Modules framed with SOLRIF®XL are framed fully on all four sides and provided with waterproof adhesion. The lower edge of the modules is underlaid with an aluminum profile. Dirt and grime are washed away by rain and such residues that might reduce output efficiency will not build up over time on the lower module edge.

[1] Zone I to 900 m above sea level; Zone II to 700 m above sea level; Zone III to 600 m above sea level; Zone IV to 400 m above sea level

The laminates can be set into frames by a fitter, by a SOLRIF®XL partner of the Ernst Schweizer AG, or on commission of the Ernst Schweizer AG.

The measurements of the framed modules are:

W x H = laminate width + 42 mm x laminate height + 45 mm

Caution: These measurements are not identical to the grid measurements (see section 4.1)

Production and System Tolerances

Framed modules are delivered with a production tolerance of 0.5 mm. The special form of the interlocking side profiles allows each module a horizontal shift of ± 2mm.

Transporting and storing of PV modules framed with SOLRIF®XL

PV modules framed with SOLRIF®XL should be stored on end and securely fastened before transport or storage. The modules should be stored with the open glass edge at top.

2.3 Suitable PV Modules - Certificates

In principle all thin-film modules under approximately 1.35 m^2 surface area are suitable, provided they are no stronger than 5.5 mm at the most and provided the sockets are at least 14 mm inside the edge of the glass. For modules that have sockets within 14 mm of the edge of the glass a special processing is necessary for the frame profiles.

Wind and snow-weight tests in accordance with IEC 61215 have been applied to a number of laminates framed with the SOLRIF system. These tests confirm the suitability and/or supplement the certification in accordance with IEC 61215.

An up-to-date list of tested modules can be viewed at www.solrif.de .

2.4 Clamps for installation and fastening

PV modules framed with SOLRIF®XL are secured to the wooden substructure by means of installation clamps. Therefore two different types of clamps are necessary:

“Frame” clamp:

Two modules at a time are secured in the interlocking area by means of a “frame” clamp. The clamp consists of two pieces joined together. This clamp is basic.

Clamp width: 16 mm
Material strength: 1.5 + 2.0 mm
Material: stainless spring steel, Type 1.4310

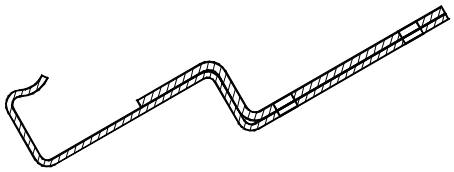

Fig. 1: “Frame” clamp

“Glass” clamp:

A module is secured additionally by means of a “glass” clamp. The clamp consists of two adhering parts. To protect the glass the front part of the clamp is covered with weatherproof coating. This clamp is supplementary measure and not always necessary.

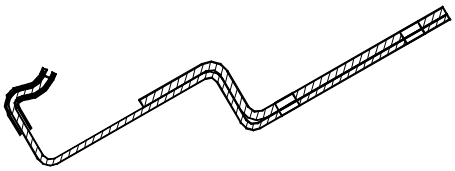

Fig 2: “Glass” clamp

Clamp width: 16 mm
Material thickness: 1.5 + 2.0 mm
Material: stainless spring steel, Type 1.4310

„Top“ clamp:

On top with plain flashings the modules are secured with the mounting clamp „top“. Alternatively folded flashings can be secured with mounting clamps “profile”.

Abb. 1:“Top“ clamp.

Clamp width: 16 mm
Material thickness: 2.0 mm
Material: stainless spring steel, Type 1.4310

Each clamp should be fastened with two 4.5 x 30 mm SPAX-S sheet-metal A2-steel screws. The screws are not included in delivery. If several “glass” clamps are necessary, these should be set symmetrically.

Tip: Do not use screws with countersunk heads as such screws might damage the clamp.

2.5 Fastening the modules

Two interlocking frame profiles are secured from underneath by means of a “frame” clamp and secured on the top side by the next module row.

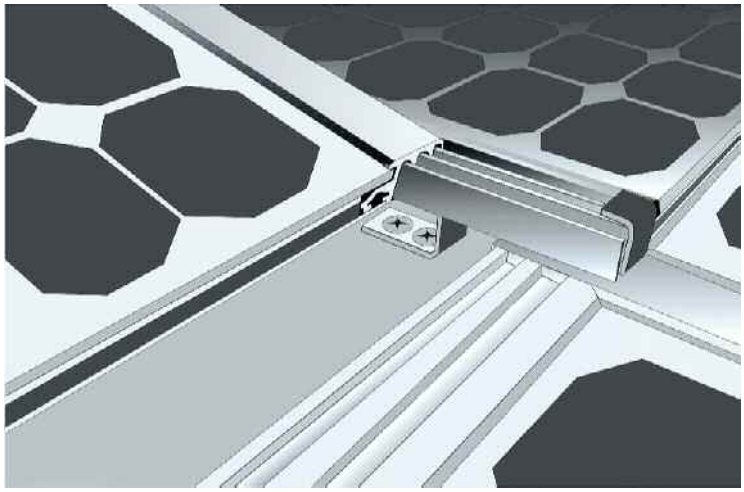

Fig. 2: Fastening the modules.

Should extra clamps be required, these clamps will touch directly upon the glass surface of the exposed underside module edge. In this case the coated “glass” clamp is to be used.

3 Components for Roof Installation

3.1 Flashing Profiles

Optional profiles, especially designed for finishing the seam on both sides of the plate and for simple sheet-metal paneling (flashing) are available for SOLRIF®XL. Additional information on the use of the flashing profiles can be found in the installation instructions.

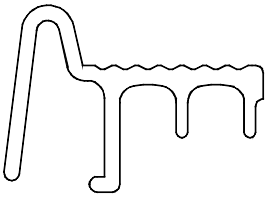

Abb. 3: Left-side flashing profile

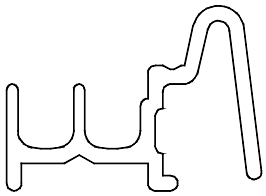

Abb. 4: Right-side flashing profile

Fig. 4: Flashing profile left

Fig. 5: Flashing profile right

3.2 Flashings

Because of the variation of module and frame measurements, the flashings have to be made individually by a sheet-metal worker or a SOLRIF®XL sales partner. They will ensure that the seam between the last profile and the roofing tiles is weatherproof.

Ernst Schweizer AG, Metallbau, distinguishes four separate flashings:

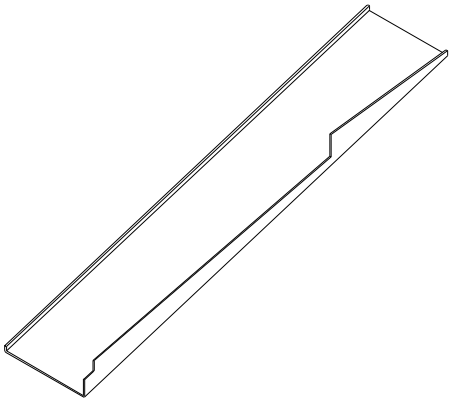

Fig. 5: Flashing top left

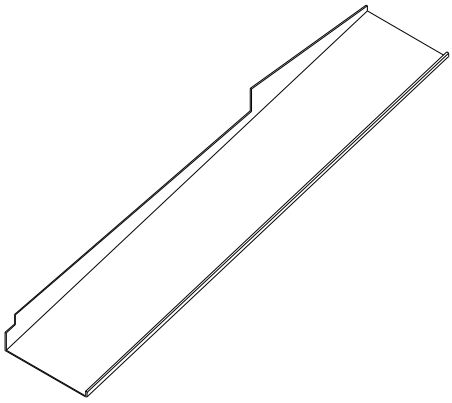

Fig. 6: Flashing top right

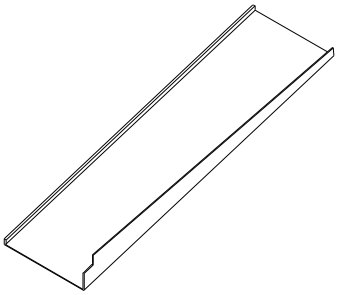

Fig. 7: Flashing left

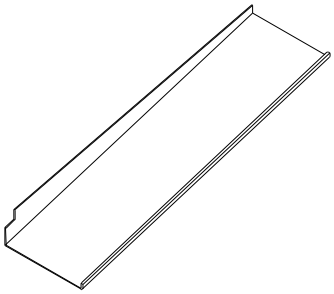

Fig. 8: Flashing right

3.3 SOLRIF®XL Substructure

The substructure of the SOLRIF®XL modules consists of SOLRIF® XL lathing. Laths measuring 30 x 100 mm – 30 x 50 mm doubled - have stood the test of time.

For eaves lathing we recommend a bevel edged board (40 x 45 or 30 mm) (cf. “Installation Instructions for SOLRIF®XL”, detail drawing A).

3.4 Upper Seam

The upper seam consists of individual sheets of tin, one for each module. At the edges the tin has been specially designed to facilitate a smooth crossing to the side flashing. There are thus three different sheet forms for the upper seam. The sheets are connected at the folds by an attachable protective profile and thus made weatherproof.

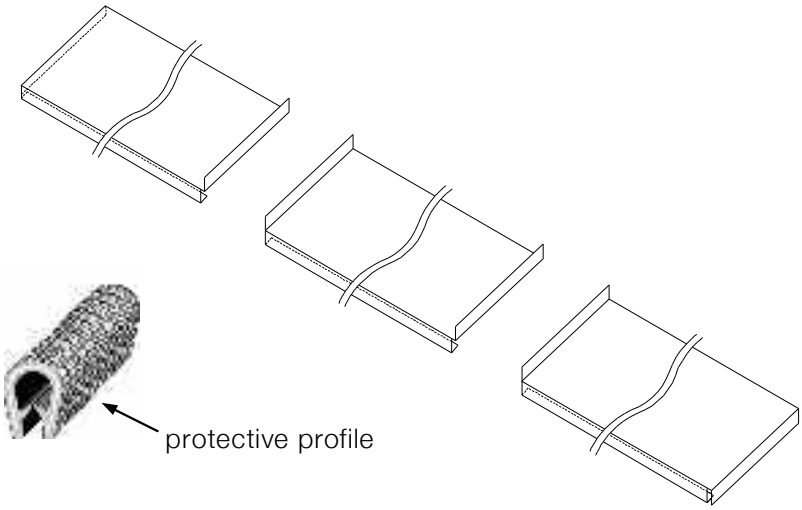

Fig. 9: Sheet forms for the upper seam, protective profile

3.5 Lower Seam

For the crossover from the lower edge of the plate to the tiles 280 mm Wakaflex band from BRAAS is suitable. Further information is to be found on the homepage of BRAAS (www.braas.de)

3.6 Tools

Few tools are needed to install SOLRIF®XL (cf. Installation Instructions).

- Preliminary to the substructure one needs:
  - *tape measure*
  - *meterstick*
  - *carpenter's pencil*
  - *wood saw*
  - *power screwdriver with bit tip holder*

- A knife is needed to cut the Wakaflex band and sealing tape.
- We recommend chalked string for marking the first row of clamps.
- In order to trim the sheet-metal, should this be found necessary, it is advisable to be equipped with metal shears and a pair of sheet-metal pliers.

4 General Planning

4.1 Grid Measurement

The exact surface area needed for the generator will be determined by the size and the number of PV modules framed with SOLRIF®XL. Under consideration of the interlocking profiles, this can be determined as:

Horizontal grid measurement: R_{hor} [mm] = laminate width [mm] + 31 mm

Vertical grid measurement: R_{ver} [mm] = laminate height [mm]

4.2 Generator Field

By multiplying the grid measurements by the corresponding number of module columns or rows one gets the approximate overall dimensions of the generator.

Generator width [mm] = R_{hor} [mm] x number of module columns
Generator height [mm] = R_{ver} [mm] x number of module rows

Under consideration of the flashing profiles one should add 15 mm to right and 15 mm to the left and then 30 mm to the height of the generator, as there is no further interlocking element for the top one.

4.3 Grid Plan

The position of the clamps on the substructure is determined by the grid plan. The grid plan is based on the calculated grid measurements.

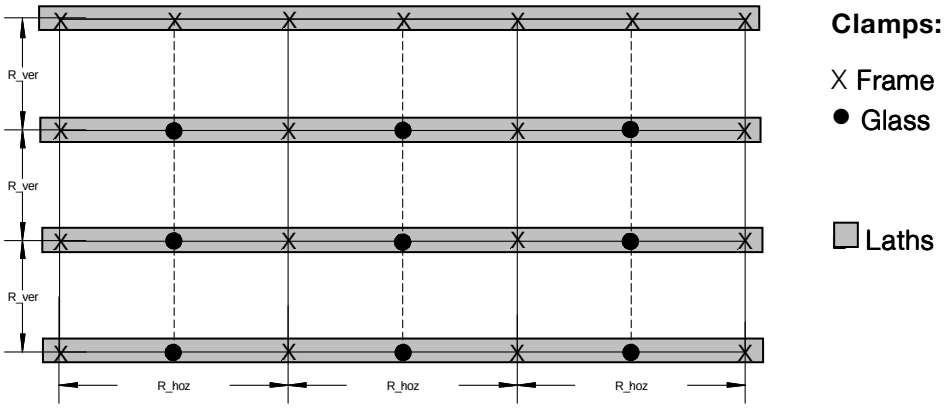

Plan 1: Standard grid plan for a generator field with 9 modules

The “glass” clamps are here added to the plan; they should be fixed as much in the middle as possible between the “frame” clamps.

Upon request you will receive an individual grid plan from your SOLRIF®XL dealer along with the delivered materials.

5 Contact

Andreas Haller (Head), Dr. Helge Hartwig
Solar Energy Department

Ernst Schweizer AG, Metallbau
Bahnhofplatz 11, CH-8908 Hedingen

Telephone direct +41 1 763 63 80, +41 1 763 63 40
Fax +41 1 763 64 10

andreas.haller@schweizer-metallbau.ch
helge.hartwig@schweizer-metallbau.ch
www.schweizer-metallbau.ch
www.solrif.de

Ernst Schweizer AG, Metallbau
CH-8908 Hedingen
Telefon +41 44 763 61 11
Telefax +41 44 763 61 19
info@schweizer-metallbau.ch
www.schweizer-metallbau.ch

Verkaufsbüros in:

Bern, Biel, Brugg, Chur,
Lausanne, Luzern,
Möhlin, Solothurn,
St. Gallen, Zürich

Installation Instructions SOLRIF® XL

Authors: Haller Andreas / Helge Hartwig / Jochen Rasmussen
Date: April 27, 2006

Contents

1 Introduction

The Installation Instructions SOLRIF®XL describe the process of in-roof installation of photovoltaic (PV) modules using SOLRIF®XL system frames. The required components, tips on measuring and precautionary safety measures are discussed in the document “SOLRIF®XL: Description of the System”. Direct current (DC) wiring is not discussed in these instructions, for that should only be executed by a professional electrician, unless prefabricated modules with cables and shock-proof plug and socket connections are being installed.

2 Preparing the substructure

Remove enough of the existing tiles from the roof so that you have room to spare for the generator. Room to spare means an extra row all the way around the planned generator space, which will allow enough space for laying down the flashings. Rafters, laths and roof deck must be in good condition; if necessary, measures should be taken to put the roof in good repair. Calculating the dimensions of the generator are discussed in “SOLRIF®XL: Description of the System”, section 4.2. The lathing in the designated generator area should be removed.

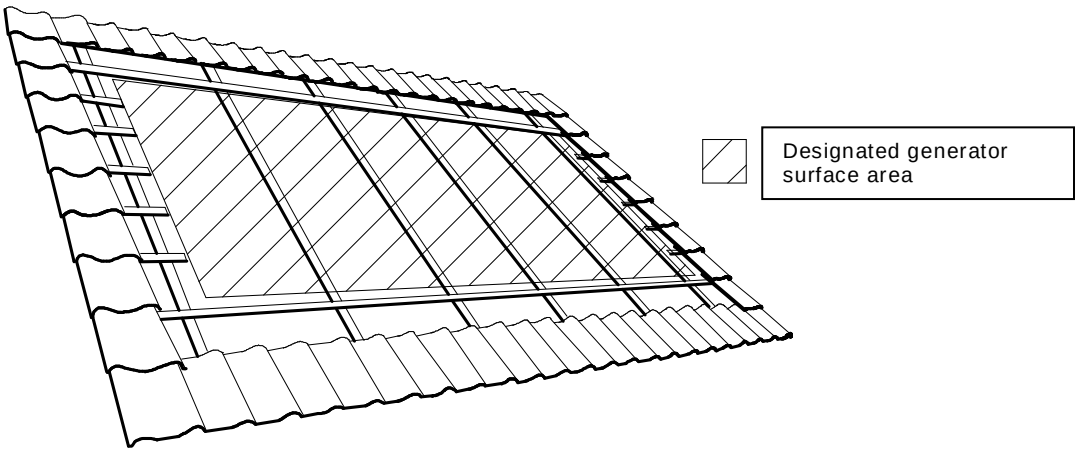

Fig. 1: Tiles and lathing should be removed from the designated generator space.

As is the case with a conventional tile roof, with SOLRIF®XL modules laths serve as the substructure. Properly dried softwoods in accordance with DIN 1052 should be used for the laths. The length of the lathing should be at least as long as the generator width including the profiles (see “SOLRIF®XL:System Description”, section 4.2) and should be placed flush against the rafters, eventually using spacers. Because of the weight, the lathing for SOLRIF®XL should always be supported by counter lathing or rafters at both ends.

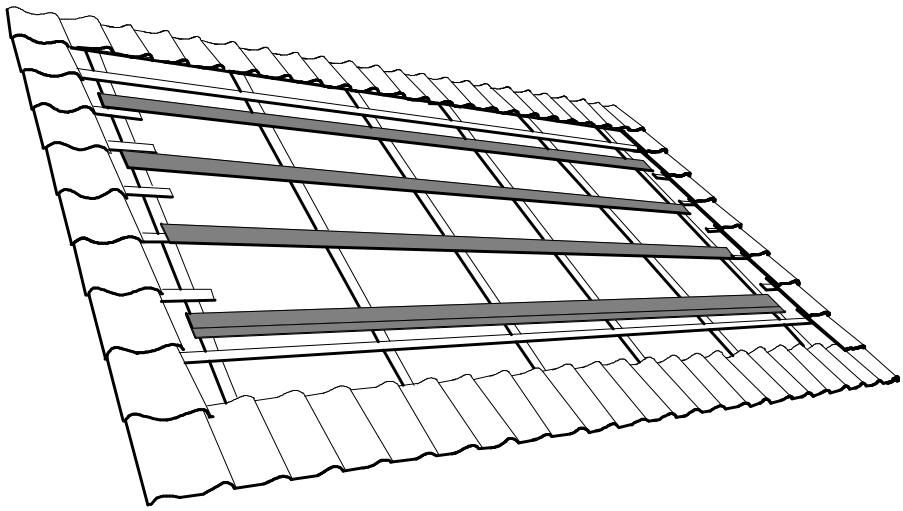

Fig. 2: The eaves and SOLRIF®XL module lathing is fastened to the counter lathing or rafters in accordance with the lathing plan.

The eaves lath is fastened by screws 5 cm above the first single-piece tiling lath located below the generator area. The eaves lath will be needed as a surface for the Wakaflex tape (see Detailed Drawing A, page 7). Care should be taken to ensure horizontal installation. The lath should sit flush against the rafters or the spacers.

The first SOLRIF®XL module lath is now fastened flush above the eaves lath. The median line of this lath is important to the worker overseeing the installation of the system as a base line. All further laths are placed in reference to this base line, corresponding to the vertical grid, which is discussed in “SOLRIF®XL: Description of the System”, section 4.1.

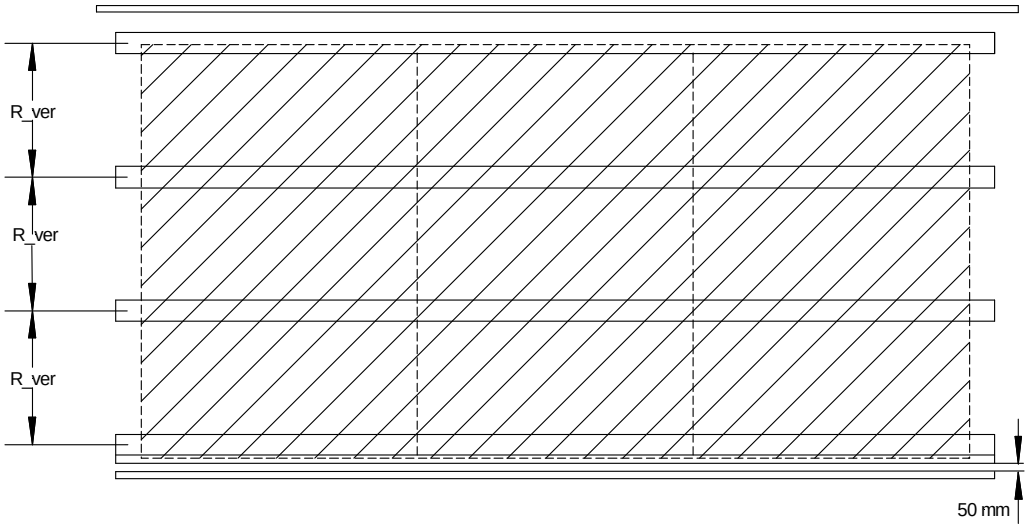

Plan 1: Lathing plan

3 The lower seam

Before beginning to install the SOLRIF®XL modules, the lower seam should be constructed. The lower row of tiles should first be put back into place. Subsequently the Wakaflex tape is to be applied flush to the top edge of the lowest SOLRIF®XL module lath. During this step, please follow the instructions on working with Wakaflex, to be found on the BRAAS homepage, www.braas.de.

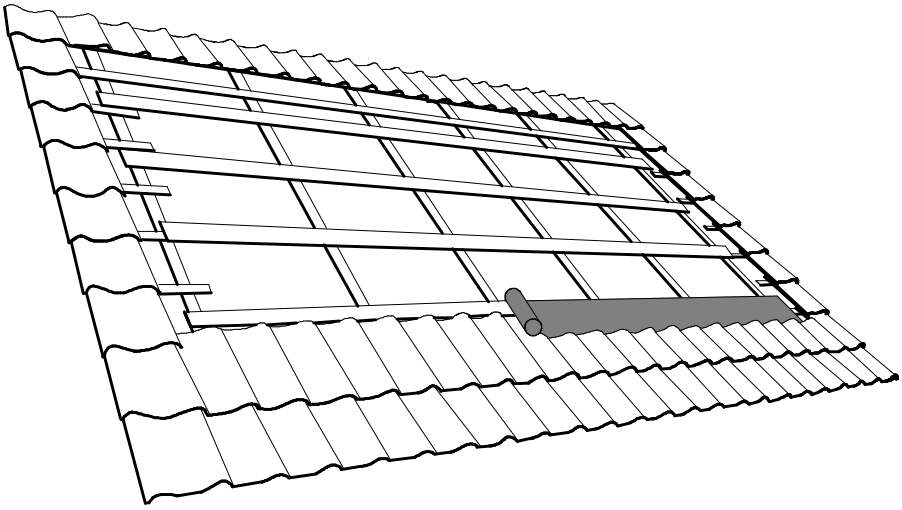

Fig. 3: Wakaflex tape is used at the lower seam.

4 Wiring

Before installing the SOLRIF®XL modules, the ends of the cable wires should be positioned on the roof deck, according to the specific plan. For the sake of convenience this wiring is usually provided with plugs and receptacles. Over shorter distances cables should be nailed to the lathing by means of cable clamps. Where several cables are run parallel to each other, it is advisable to install a cable duct between the laths. Cables marked “+” and “-“ should be laid neatly and snugly to avoid looping (inductive over-voltage). The necessity of lightning guards or over-voltage protection should be determined as the case may be.

5 Clamps in General

In principle SOLRIF®XL modules are held by means of clamps fastened by screws to the SOLRIF®XL lathing. A SOLRIF®XL module is held at each lower frame corner by a “frame” clamp. Modules located in the middle of the generator field, contrary to modules at either the left or the right side, share a “frame” clamp where their edges meet. An additional “glass” clamp supports the module in the middle of the module and is provided with protective coating to protect the otherwise unprotected edge of the glass.

The positioning of the clamps is determined by the grid plan – see the document “SOLRIF®XL: System Description”, section 4.3.

Tip: Ensure that the screws are positioned at least 22.5 mm from the lower and 45 mm from the upper lath edge (DIN 1052-2).

6 Initial row of clamps

During installation begin with the lower row of “frame” clamps, which are screwed directly through the Wakaflex tape along the longitudinal axis of the lower SOLRIF®XL module lath. The grid uses the clamp’s lower bore as its point of reference. Each clamp will require two 4.5 x 30 mm SPAX-S A2-steel sheet-metal screws.

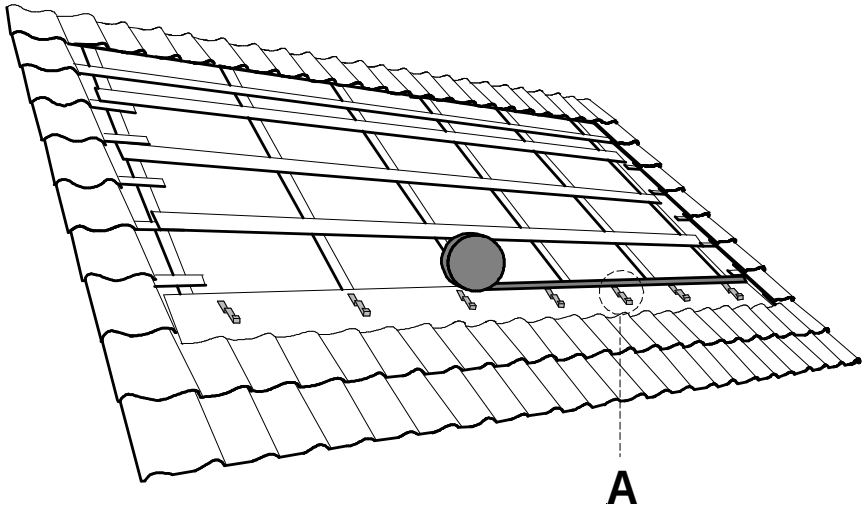

Fig. 4: The first row of clamps is screwed upon the Wakaflex tape. The Sealing tape keeps small animals from the hollows (see Detail Drawing A, page 7).

Tip: Mark the longitudinal axis of the module lath on the Wakaflex tape with a chalked string. Then mark the horizontal clamps’ position in accordance with the grid. The clamps are then fixed in their exact position by inserting a screw through the lower bore at the “line cross”. Now the additional “glass” clamps are put into place.

Finally sealing tape is applied flush to the upper edge of the module lath. This will prevent small animals from entering the hollows.

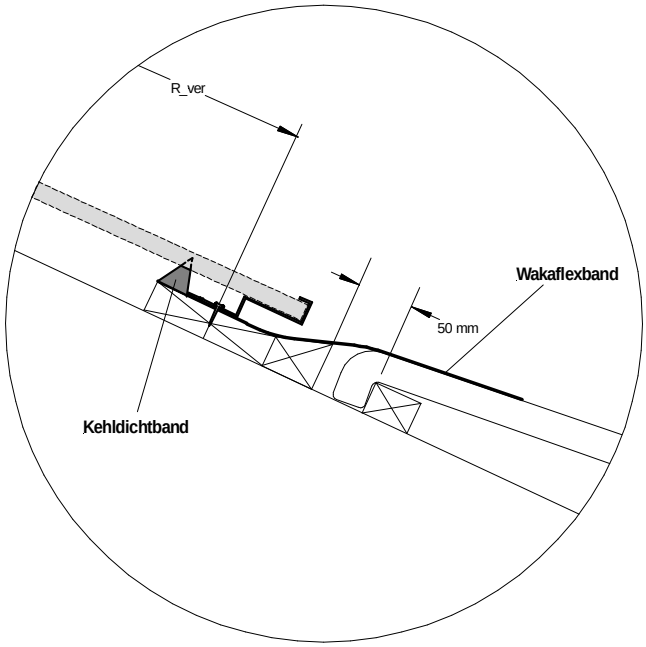

Detail Drawing A: vertical cross section of the lower sealing area

7 Lower row of modules

Over-lapping determines the order in which the SOLRIF®XL modules are installed, thus each row is laid from right to left. As with roof tiles, the module rows are laid from the bottom up.

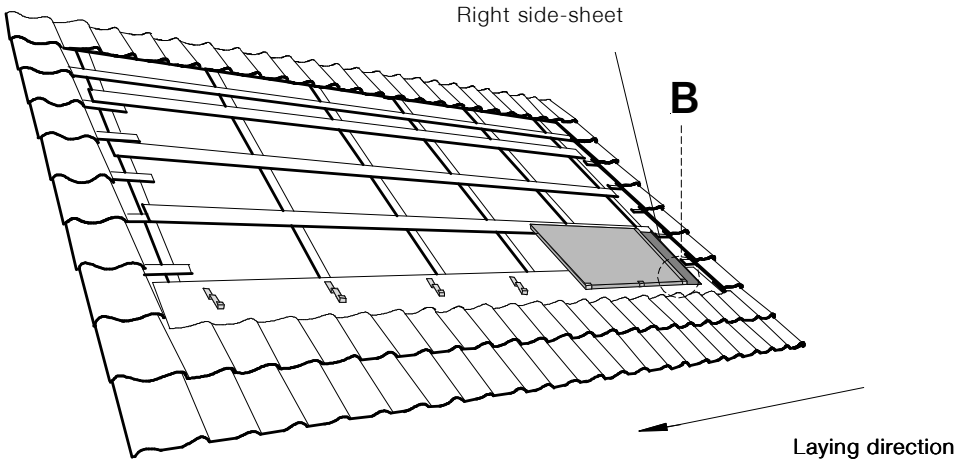

Fig. 5: Starting at the right, the first row of modules is laid.

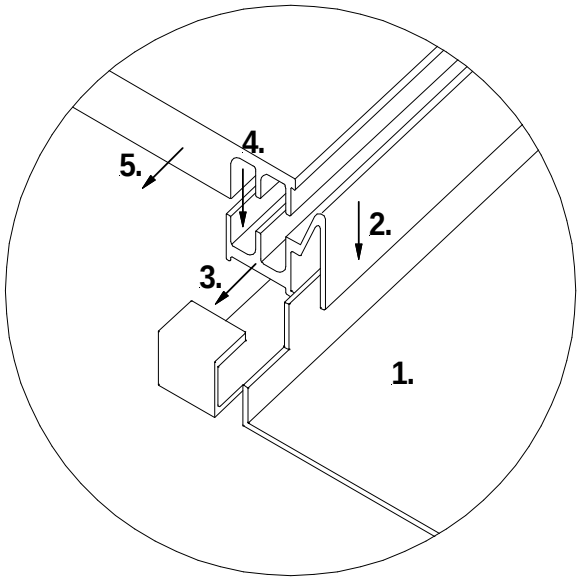

Detail Drawing B: Sequence from the side-sheet to the first module

Before the first SOLRIF module can be fitted into the clamp, the right side-sheet must be installed (step 1). Then a right-side joining profile is inserted into the outermost clamp (steps 2 + 3). The first module can now be installed (steps 4 + 5).

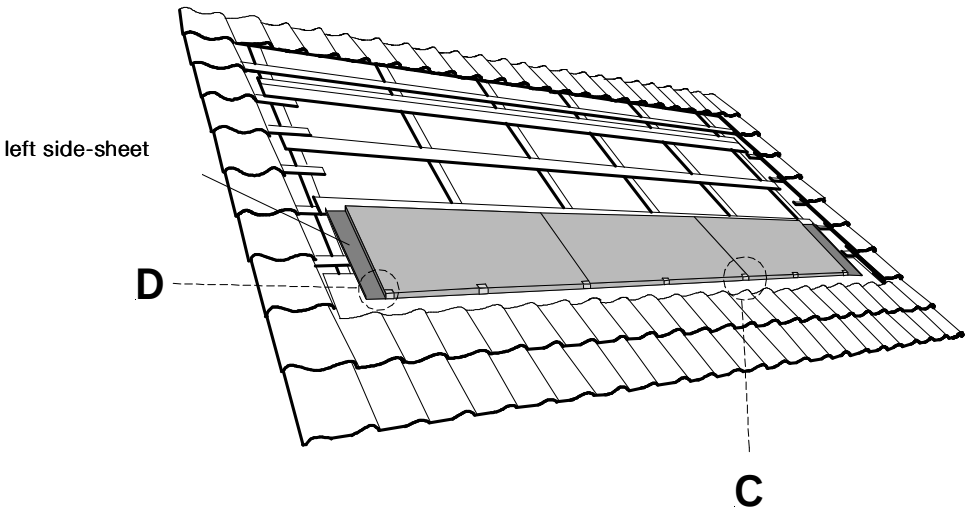

Fig. 6: The modules of the first row, side-sheets and joining profiles are installed.

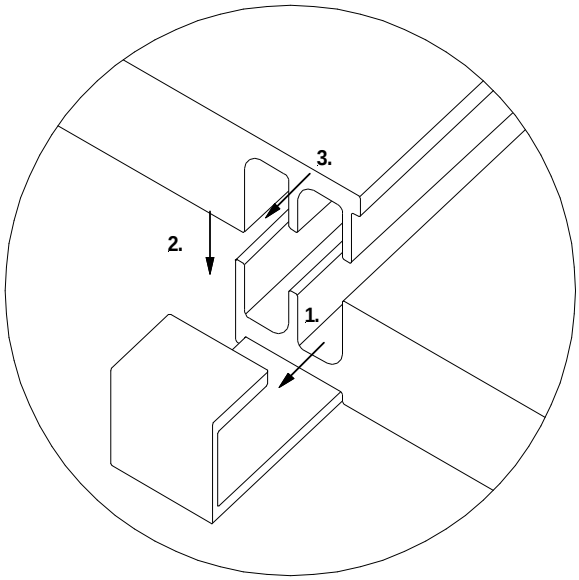

Detail Drawing C: Sequence for laying the middle modules

The next SOLRIF®XL modules in the first row are laid following the steps shown in Detail Drawing C. The modules should be wired according to the cord plan before they are laid.

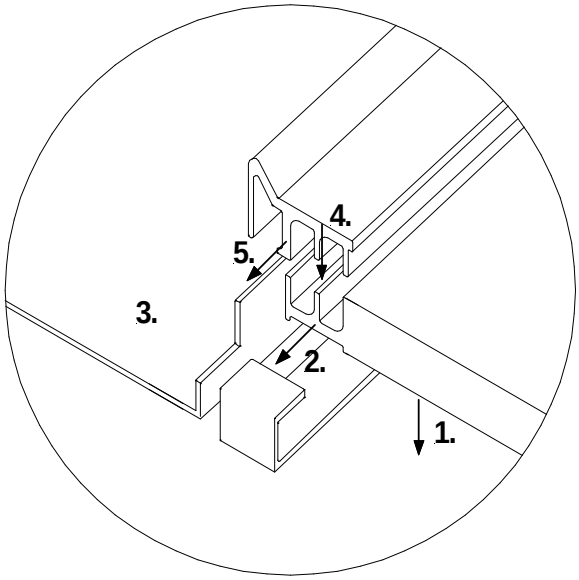

Detail Drawing D: Sequence on the left-side-sheet

After the last SOLRIF®XL module in the row has been laid, the left side-sheet and the joining profile can be set. (Detail D)

8 From the second to the top row of modules

After the first row of SOLRIF®XL modules has been laid complete with the joining profiles, the clamps for the second row can be set. It is possible by using the grid plan to pre-mark the clamp position on the module lathing and precisely to set the clamps in turn.

Usually, however, a different, easier method is used:

The “frame” clamps are positioned by eye plumb, using the clamps in the first row as a guide. The sides of the framing profiles of the lower SOLRIF®XL modules can help in alignment.

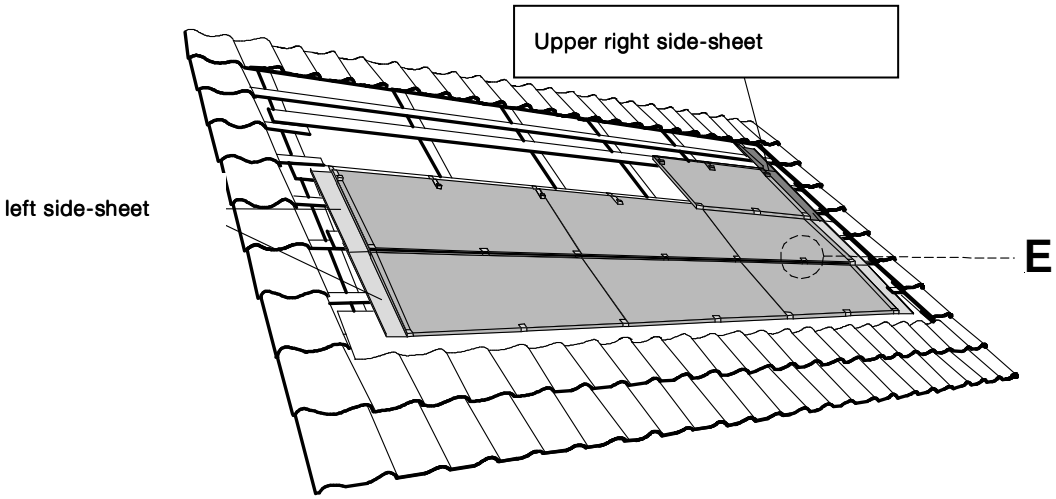

Fig. 7: Laying the next row of modules.

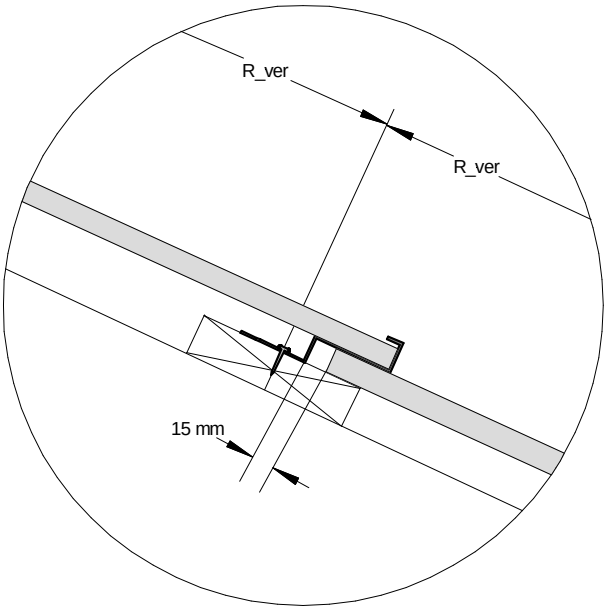

The clamps are fastened leaving 15 mm space to the previous row of modules. This space will allow the replacement of individual modules within the generator field by a simple slide-and-slip maneuver.

Tip: Use a 15 mm spacing wood to place the clamps.

The same procedure is to be used for the “glass” clamps, which again are set at regular intervals.

Detail Drawing E: Overlapping modules

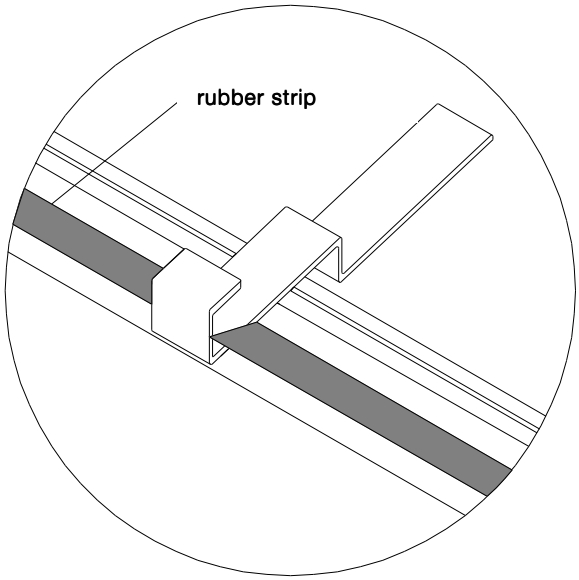

In order to guard against seeping water a rubber strip is inserted into the upper framing profile. It is advisable to cut the rubber strip at the side with a carpet knife so that the strip can be laid so as to ensure a safeguard against rainwater.

Detail Drawing F: Rubber strip

To lay the remaining rows of modules, side-sheets and joining profiles, follow the procedure outlined in section 1.5.

Upper side-sheets

The upper side-sheets are somewhat longer than usual side-sheets in order to allow backing water to run off. The installation procedure is similar to that of normal side profiles.

Top Clamps

The top row of modules are secured on the upper edge by “frame” clamps which later accommodate the flashing. Their placement is determined by the grid plan.

9 Top Seam

The top seam sheets are set into clamps instead of a further row of modules. This will be the crossover to the roof tiles.

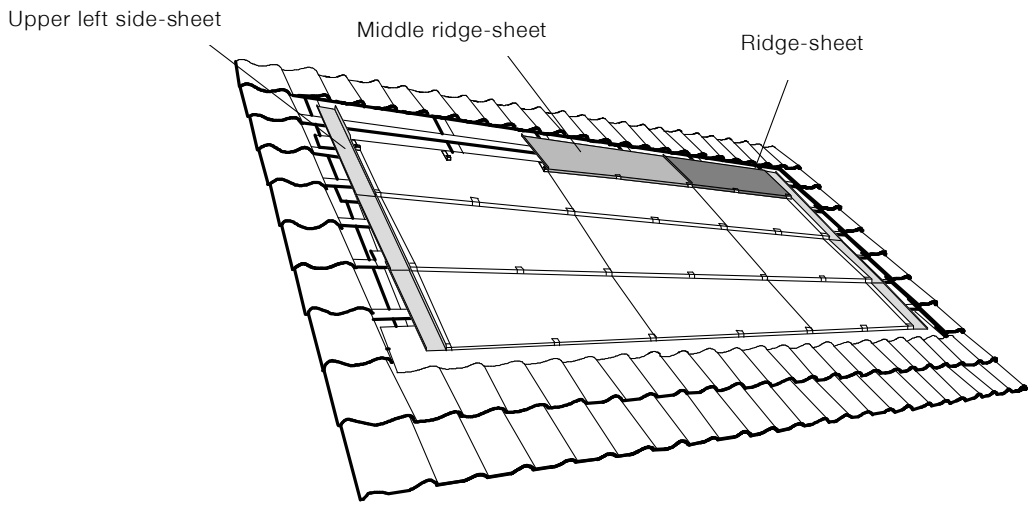

Fig. 8: Laying the ridge sheets

Start with the right-hand side ridge sheet, which, because of its special form, fits exactly into the upper right-hand side-sheet. Then the middle ridge sheets are installed, lipped edge against lipped edge.

The left-hand side ridge sheet has been specially formed as well and fits into the upper left-hand side-sheet. The adjacent sheet-lips are joined watertight by means of the edge-safeguard profile.

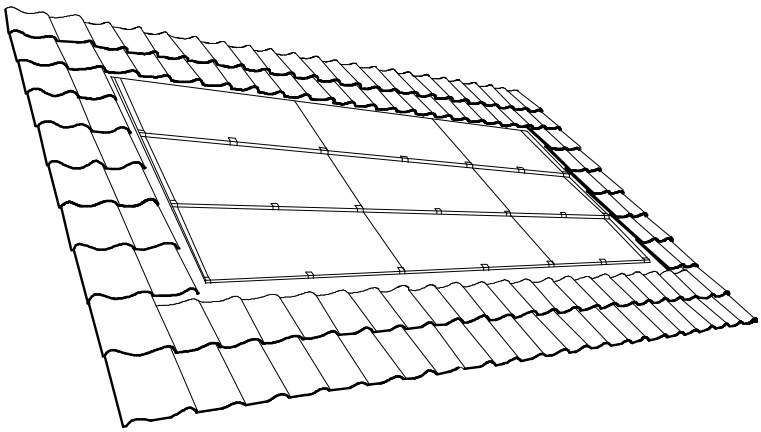

Fig. 9: Laying the roof tiles.

The missing tiles are re-laid at the sides of and above the generator field. If necessary, the tiles may have to be cut in order to provide for a proper integration of the generator into the roof. Professional roofing skills are required for this last step, too.

10 Construction Checklist

Pos.	Article	Quantity (piece; meter)	Supplier
1	Grid plan	1	SOLRIF supplier
2	Framed modules	dependent upon Pos. 1	SOLRIF supplier
3	Clamps, spring steel	dependent upon Pos. 1	SOLRIF supplier
4	4.5 x 30 mm SPAX-S sheet-metal A2-steel screws	2 per clamp	Installer
5	SOLRIF lathing 30 x 100 mm, 30 x 50 mm doubled	Area width x (number of module rows + 1)	Installer
6	Eaves lath 40 x 45 or 30 mm	1 x width of area	Installer
7	SPAX-S with countersunk heads for lathing 6 x 90 mm	dependent upon area size and grid rafters and laths	Installer
8	Sealing tape 30 x 40 mm	1 x width of area	Installer
9	Joining profile, aluminium	1 pair per module row	SOLRIF supplier
10	Side-sheets	1 pair per module row - 1	Local roof plumber
11	Side-sheets, top	1 pair	Local roof plumber
12	Upper side-sheets / middle	No. of module columns - 2	Local roof plumber
13	Upper side-sheets / right	1	Local roof plumber
14	Upper side-sheets / left	1	Local roof plumber
15	Wakaflex tape	1 x width of area	Installer
16	Cable ties	due to generator size	Installer
17	Measuring tape and meter stick	1 a piece	Installer
18	Carpenter's pencil	2	Installer
19	Handsaw and jigsaw	1 a piece	Installer
20	Screwdriver (bit tip holder 2)	1	Installer
21	Knife	1	Installer
22	Chalked string	1	Installer
23	Metal shears, sheet-metal pliers	1 a piece	Installer

11 Contact

Andreas Haller (Head), Dr Helge Hartwig.
Solar Energy Department

Ernst Schweizer AG, Metallbau
Bahnhofplatz 11, CH-8908 Hedingen

Phone direct +41 1 763 63 80, +41 1 763 63 40
Fax +41 1 763 64 10

andreas.haller@schweizer-metallbau.ch
helge.hartwig@schweizer-metallbau.ch
www.schweizer-metallbau.ch
www.solrif.de

SUNPOWER

SPR-215-BLK
RESIDENTIAL PV MODULE

The SunPower SPR-215-BLK is designed specifically for on-grid residential systems where a combination of high module efficiency and outstanding appearance is desirable. Utilizing 72 series-connected A-300 solar cells, the SPR-215-BLK delivers industry-leading power density in a unique all-black module package with exceptionally uniform appearance.

SunPower modules—innovative design, proven materials, outstanding performance.

FEATURES & BENEFITS

- All-black module package eliminates harsh reflections and other noticeable cosmetic module features to provide optimum array appearance
- Unique all-back contact solar cells with conversion efficiency up to 21.5%
- Low voltage-temperature coefficient, exceptional low-light performance, and high sensitivity to light across the entire solar spectrum maximize yearly energy delivery
- Highest quality, high-transmission tempered glass provides enhanced stiffness and impact resistance
- Aerospace style cell interconnects with in-plane strain relief provide extremely high reliability
- Advanced EVA encapsulation system with multi-layer backsheet meets the most stringent safety requirements for high-voltage operation
- A sturdy, black anodized aluminium frame allows modules to be easily roof-mounted with a wide variety of standard mounting systems

SPR-215-BLK RESIDENTIAL PV MODULE
An unequaled combination of power and grace

UL LISTED UL 1703, Class C Fire Rating

IEC 61215, Safety Class II Certified

Document# 001-06638 Rev *B

SunPower Corporation®
1.877.786.0123 Email: sales@sunpowercorp.com www.sunpowercorp.com
Engineered in California

CU
585

SUNPOWER

SPR-215-BLK

RESIDENTIAL PV MODULE

ELECTRICAL CHARACTERISTICS AT STANDARD TEST CONDITIONS (STC)

STC is defined as: irradiance of 1000W/m^2, spectrum AM 1.5g and cell temperature of 25°C

Peak Power[1,2]	P_{max}	215W
Rated Voltage	V_{mp}	39.8V
Rated Current	I_{mp}	5.40A
Open Circuit Voltage	V_{oc}	48.3V
Short Circuit Current	I_{sc}	5.80A
Series Fuse Rating		15A
Maximum System Voltage		600V (UL)
		1000V (IEC)
Temperature Co-efficients	Power	-0.38%/°C
	Voltage	-136.8mV/°C
	Current	2.3mA/°C
Module Efficiency		17.3%
PTC Rating		197.6W

IV CURVE

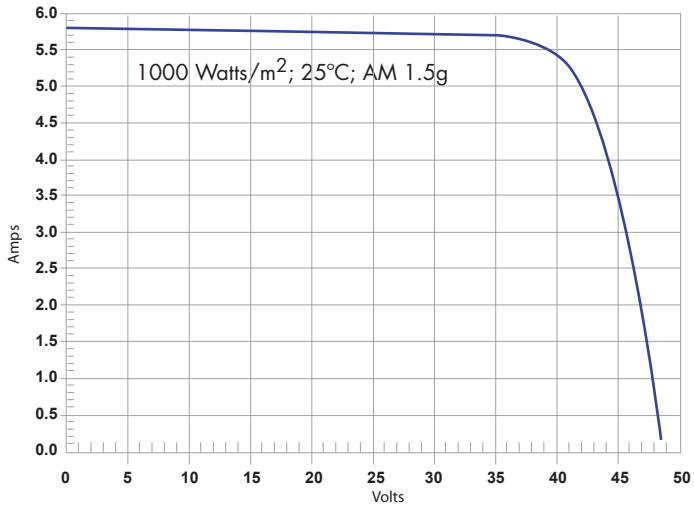

[1] Peak Power Tolerance: +/- 8%

[2] Power guaranteed for 25 years. See SunPower Limited Warranty for details.

MECHANICAL SPECIFICATIONS

Length (mm) x Width (mm)	1559 x 798
Thickness, including junction box (mm)	46
Weight (kg)	15

DIMENSIONS

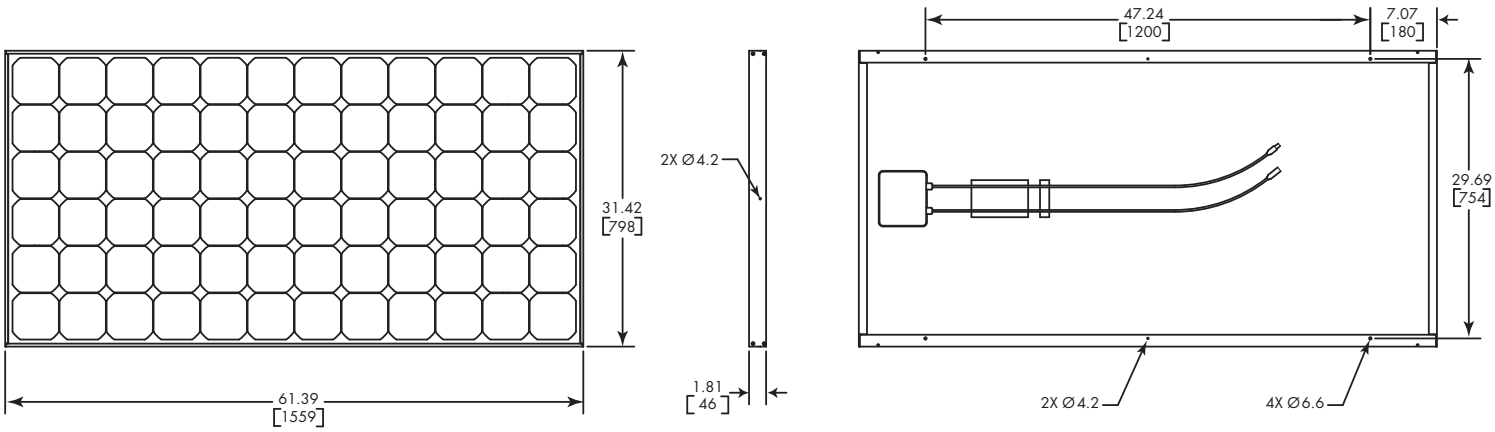

Document# 001-06638 Rev *B

SunPower Corporation®
1.877.786.0123 Email: sales@sunpowercorp.com www.sunpowercorp.com
Engineered in California

CU
586

SUNPOWER

SPRx
HIGH EFFICIENCY INVERTERS

SunPower high performance photovoltaic (PV) string inverters offer high efficiency, low installed cost, clean design and high reliability.

FEATURES & BENEFITS

- Peak and average efficiency greater than 94% maximizes your PV investment
- Fast MPPT algorithm ensures maximum energy harvest from your array under any conditions
- Includes integrated lockable AC/DC disconnect that is NEC compliant as a DC disconnect
- Includes a lightweight and versatile mounting bracket that simplifies installation
- Modular design allows SunPower SPRx inverters with the same or different power levels to be mounted side-by-side using the wiring box as a wiring raceway
- Sealed inverter can be separated from the wiring box enclosure allowing DC/AC connections to remain intact
- Bright LED indicators provide system status at a glance
- LCD providing instantaneous feedback on power, energy production, PV array voltage and current and much more
- Works with all SunPower modules

SPRx HIGH EFFICENCY INVERTER

UL 1741
CSA 107.1-01
C US

PHOTOVOLTAIC
POWER INVERTER

Document# 001 08227 Rev **

SunPower Corporation®
1.877.786.0123 Email: sales@sunpowercorp.com www.sunpowercorp.com

CU
587

SUNPOWER

SPRx
HIGH EFFICIENCY INVERTERS

ELECTRICAL SPECIFICATIONS

Model	SPR-3300x	SPR-3300x-208	SPR-4000x
Maximum AC Power Output	3300 W	3300 W	4000 W
AC Output Voltage (nominal)	240 VAC	208 VAC	240 VAC
AC Voltage Range	211-264 VAC	183-228 VAC	211-264 VAC
AC Frequency (nominal)	60 Hz	60 Hz	60 Hz
AC Frequency Range	59.3-60.5 Hz	59.3-60.5 Hz	59.3-60.5 Hz
Maximum Continuous Output Current	13.8 A	15.9 A	16.7 A
Current THD	< 3%	< 3%	< 3%
Power Factor	> 0.9	> 0.9	> 0.9
DC Input Voltage Range	195-600 VDC	195-600 VDC	195-600 VDC
Max DC current	18.5 Adc	18.5 Adc	22.1 Adc
Peak Power Tracking Voltage Range	195-550 VDC	195-550 VDC	195-550 VDC
Peak Inverter Efficiency	95.3%	94.6%	95.7%
CEC Efficiency	94.5%	94.0%	95.0%
Night Time Power Consumption	< 1 W	< 1 W	< 1W
Output Overcurrent Protection	20 A	25 A	25 A
Grounding	Positive ground for SunPower modules		

MECHANICAL SPECIFICATIONS

Operating Temperature Range	-13F to 149F (-25°C to +65°C)
Enclosure Type	NEMA3R (outdoor rated)
Unit Weight	49.0 to 51 lbs
Shipping Weight	57 to 59 lbs
Shipping Dimensions (HxWxD)	34.1 x 20.4 x 10.3" (86.6 x 51.8 x 26.2 cm)
Inverter Dimensions (HxWxD)	28.5 x 15.9 x 5.7" (72.4 x 40.3 x 14.6 cm)
Mounting	Wall Mount (mounting bracket included)

FEATURES

PV/Utility Disconnect	Eliminates need for external PV (DC) disconnect. Complies with UL and NEC requirements
Cooling	Convection cooled, no fan required
Display	Backlit, 2-line, 16-character Liquid Crystal Display provides instantaneous power, daily and lifetime energy production, PV array voltage and frequency, time online "selling" today and fault messages
Communications	RS 232 and Two Canbus RJ45 ports
Wiring Box	PV, utility, ground, and communications connections. Inverter can be separated from the wiring box
Warranty	10 years

Document# 001 08227 Rev **

SunPower Corporation®
1.877.786.0123 Email: sales@sunpowercorp.com www.sunpowercorp.com

Smart choice for power

xantrex CU 589

Xantrex XW Series

The New standard in battery-based systems

Xantrex XW Series offers an innovative, integrated design

The superior integration of the XW Series design minimizes external balance-of-system components allowing for much quicker and easier installation. All XW system components communicate together over the Xanbus™ network. Common system settings are shared between devices on the network to facilitate setup.

XW Hybrid Inverter/Charger:

- Certified to UL1741 and CSA for utility-interactive applications (no need to purchase a different model/component depending on application)
- 120/240 V split-phase, sine-wave output (no need for auto-transformer or stacking of inverters)
- Unsurpassed surge capacity (innovative full digital control regulates voltage from dropping during surge). Full 200% rated output power is delivered to load
- Efficient, power-factor-corrected, high-current multi-stage battery charging (minimizes recharge time, electricity/fuel costs and prolongs battery life)
- Easier and less expensive to install - mounting bracket is included (no need to purchase a backplate) and the Power Distribution Panel includes all AC/DC disconnects and wiring (no need to individually purchase separate components)
- Xanbus network enabled

XW Power Distribution Panel:

- Factory wired and labelled to support one inverter in a code-compliant manner, with wiring space and conduit and breaker knockouts to add up to three inverters, and/or four charge controllers
- Includes wall-mounting bracket, conduit box/raceway with barriers to ensure separation between low-voltage communication cables and AC and DC wires; field-reversible door with magnetic catch

XW Connection Kit for 2nd Inverter

- Includes conduit box and all AC/DC breakers and wires needed to connect a second inverter into the XW Power Distribution Panel.
- All wires are pre-cut and labelled to facilitate easy installation

XW Conduit Box:

- Bare conduit box (no wires) for systems with more than two inverters or to retrofit XW inverters into existing systems that may already have AC/DC disconnects

XW Solar Charge Controller:

- 60 amp solar charge controller with integrated PV ground fault protection
- Accepts PV arrays with open circuit voltage up to 150 volts DC
- Employs dynamic maximum power point tracking (no mini or full sweeps)
- Convection cooled - no fan
- 5 year standard warranty
- Xanbus network enabled

XW System Control Panel:

- Plugs into Xanbus network and provides a central user interface to configure and monitor all components in the system.

XW Automatic Generator Start:

- Automatically activating generator to recharge depleted battery bank or assist with heavy loads to provide intellegent power management

XW Series Hybrid Inverter/Charger

Product Specifications

Model	XW6048-120/240-60	XW4548-120/240-60	XW4024-120/240-60
Continuous output power	6.0 kW	4.5 kW	4.0 kW
5 second surge	12.0 kW	9.0 kW	8.0 kW
Waveform	True sine	True sine	True sine
Low load efficiency	95%	95%	95%
Full load efficiency	91%	91%	91%
Idle consumption - invert mode, no load	28 W	26 W	24 W
Idle consumption - search mode	< 8 W	< 8 W	< 8 W
AC inputs	AC1 (Grid), AC2 (Generator)	AC1 (Grid), AC2 (Generator)	AC1 (Grid), AC2 (Generator)
AC voltage	120/240 Vac split-phase	120/240 Vac split-phase	120/240 Vac split phase
AC input breaker	60 A double-pole	60 A double-pole	60 A double-pole
AC output voltage	L-N: 120 Vac +/-3% L-L: 240 Vac +/-3%	L-N: 120 Vac +/-3% L-L: 240 Vac +/-3%	L-N: 120 Vac +/-3% L-L: 240 Vac +/-3%
AC output frequency	60.0 Hz +/-0.1 Hz	60.0 Hz +/-0.1 Hz	60.0 Hz +/-0.1 Hz
AC output breaker	60 A double-pole	60 A double-pole	60 A double-pole
DC current at rated power	127 A	95 A	171 A
Continuous charge rate at L-L voltage	100 A	85 A	150 A
Automatic transfer relay	60 A	60 A	60 A
Utility-interactive	Yes	Yes	Yes
CEC weighted efficiency	93%	TBD	TBD
CEC power rating	6 kW	4.5 kW	4.0 kW
DC input voltage (nominal)	48 Vdc	48 Vdc	24 Vdc
DC input voltage range	44 to 64 Vdc	44 to 64 Vdc	22 to 32 Vdc
Power factor corrected charging	0.99	0.99	0.99
Emissions	FCC Class B	FCC Class B	FCC Class B
Display panel	Status-at-a-glance LED's indicate AC-in status, faults/warnings, equalize mode, battery state-of-charge. Three character LCD indicates output power or charge current. On/off and equalize buttons.		
Multiple unit configurations	Up to three parallel units in 120/240 split-phase configuration.		
Auxiliary relay output	Configurable 0 to12 Vdc output, maximum 250 mAdc Adjustable triggers: low/high battery voltage or temp, fault condition		
Non volatile memory	Yes	Yes	Yes
System network	Plug-n-play Xanbus network, no need for hubs or special cards, allows up to 20 devices on network		
Standard Warranty	5 years	5 years	5 years
Field Serviceable	Yes, all components can be replaced while unit is installed on wall		
Enclosure Type	NEMA Type 1 - Indoor (sensitive electronic components sealed inside enclosure)		
Mounting	Wall mount, backplate included	Wall mount, backplate included	Wall mount, backplate included
Operational temperature range	-25 °C to 70 °C	-25 °C to 70 °C	-25 °C to 70 °C
Dimensions (W x L x D)	16 x 23 x 9"	16 x 23 x 9"	16 x 23 x 9"
Weight	125 lb	115 lb	115 lb
Battery temperature sensor	Included	Included	Included
Remote Display	Optional XW System Control Panel monitors and configures all devices connected to Xanbus network		
Generator Support	Optional XW Automatic Generator Start module connects to Xanbus network. Automatically activates generator to recharge depleted battery bank or assist inverter with heavy loads.		
Power distribution panel & conduit boxes	Optional balance-of-systems components for NEC compliant installations, includes pre-wired AC and DC circuit breakers, bus bars and multiple knockouts for conduit and additional breakers		

Regulatory Approvals

UL 1741 1st Edition: 2005 Version CSA 107.1-01

This booklet is printed on acid free, 10% post-consumer, elemental chlorine free Productolith paper stock.

XW Power System - Installation Overview

xantrex

Important: This overview is NOT intended to replace the XW Power System Installation Guide. *BE SURE TO READ THE INSTALLATION GUIDE FOR PROPER INSTALLATION INSTRUCTIONS.* Installation of this equipment should only be performed by skilled personnel such as qualified electricians and Certified Renewable Energy (RE) System Installers.

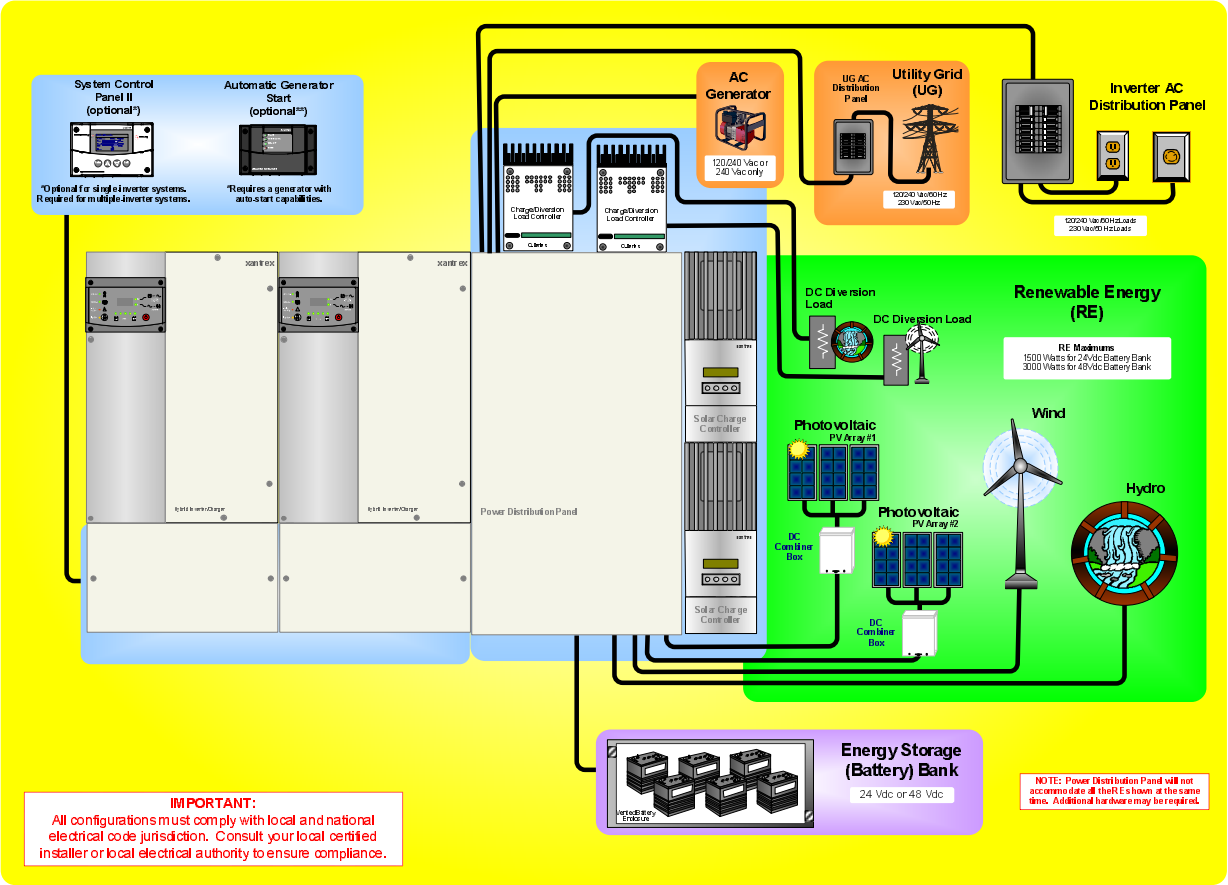

975-0238-01-01 Rev A11 XW Install Ovrv.vsd 12/11/2006

Installation Overview:

The following information is a list of basic steps required to install an XW Inverter/Charger. Actual installation procedures will vary depending upon the configuration of the intended system. *This Overview is provided for information only. Consult the XW Power System Installation Guide for specific installation instructions.*

1. Mount the inverter/charger and supporting components.

- Plan the safe location and wiring routes for all components involved.
- Be sure the mounting surface is strong enough to support the weight of all the equipment.
- Be sure all wiring will safely handle the desired loads/current.
- Install Conduit Box and Power Distribution Panel

2. Prepare the Energy Storage (battery) Bank.

- Select battery type, size, and battery bank configuration (Series, Parallel or Series-Parallel).
- Connect appropriate cabling, DC disconnects, and over-current protection.

See Battery Banks for Inverter Systems Application Note on the Xantrex website.

3. Install the renewable energy sources (if used).

- Photovoltaic sources (Solar) - Includes the PV panels, combiner boxes (if used), DC Disconnects with ground fault protection (PVGFP) and DC Controller.
- Wind/hydro sources - Includes the hydro/wind generator, DC Disconnects, Load Controller, and Diversion Load.

4. Install the AC or DC generator (if used).

- Install an AC generator for AC load backup or battery charging.
- Install a DC generator for DC loads or battery charging.

5. Prepare the system grounds.

- Ensure there is only one (1) neutral-to-ground bond.
- Ensure the system is properly grounded and has all appropriate system protection.
- Ensure multiple ground rods (if used) are bonded together.

6. Install any accessories needed.

- System Control Panel II
- Solar Charge Controller
- XW Automatic Generator Start Module
- Xanbus Network Cables
- Auxiliary Power Supply or RPO Switch
- AC Sync Cables

7. Connect the Energy Storage bank to the inverter/charger.

- Connect the Negative Cable from the DC Disconnect to the DC Negative (–) terminal on the Inverter.
- Connect the Positive Cable from the DC Disconnect to the DC Positive (+) terminal on the inverter.

8. Connect the inverter/charger to the Inverter AC Distribution Panel and house loads.

- Connect the AC OUT of the inverter/charger to the Inverter AC Distribution Panel supporting the house loads.

9. If power is available from a local utility grid:

- Connect the input from the local utility grid.

CU 591

XW Inverter/Charger – Basic Menu Map

xantrex

Use the System Control Panel II to select basic features and functions.

XW Inverter/Charger

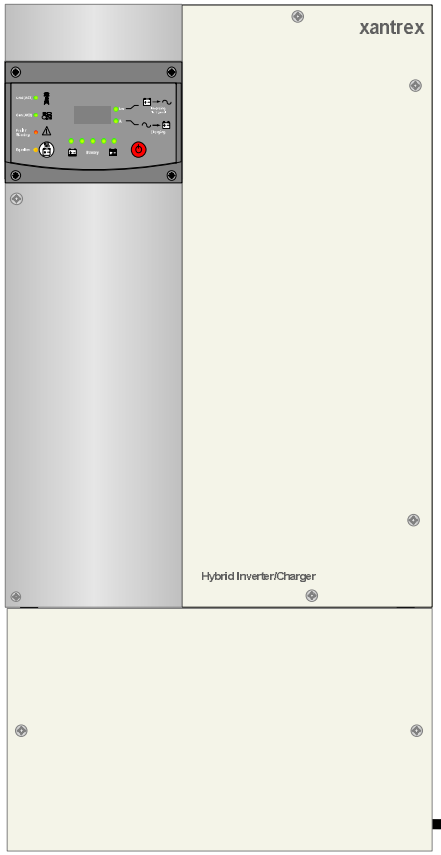

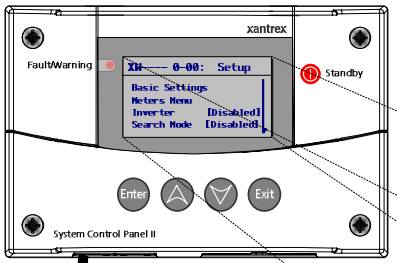

Main Menu

To Navigate within the menus or change settings....

- **Enter** — Displays the next screen or confirms selection of a menu item.
- **△** — Scrolls up one line of text or increases a selected value.
- **▽** — Scrolls down one line of text or decreases a selected value.
- **Exit** — Cancels selection of a menu item or displays the previous screen.

To Configure Basic Settings....

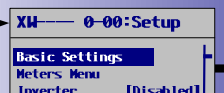

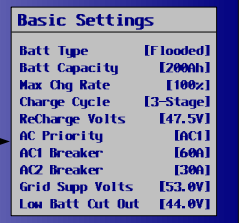

To Monitor...

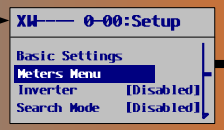

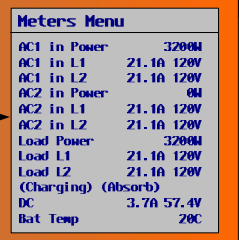

To Select Operating Mode...

To Enable/Disable Features...

To View Device Info...

975-0238-01-01 Rev A11 XWInstall Ovrv.vsd 12/11/2006

CU 592

XW Inverter/Charger – Advanced Menu Map

xantrex

Use the System Control Panel II to change factory-programmed features and functions.

IMPORTANT:
Adjustment to these configuration settings should be done by a qualified installer. Misadjustment of these settings could create a safety hazard or damage the attached equipment.

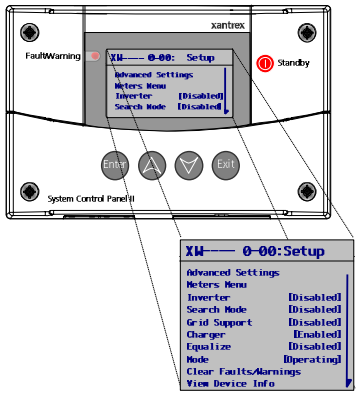

Main Menu

To Navigate within the menus or change settings....

- Enter — Displays the next screen or confirms selection of a menu item.
- ∧ — Scrolls up one line of text or increases a selected value.
- ∨ — Scrolls down one line of text or decreases a selected value.
- Exit — Cancels selection of a menu item or displays the previous screen.

To Configure Advanced Settings....

XW—— 0-00:Setup
- Advanced Settings
- Meters Menu
- Inverter [Disabled]
- Search Mode [Disabled]

Advanced Settings
- Multi-Unit Stacking
- Inverter Settings
- Charger Settings
- AC Settings
- Grid Support
- Gen Support
- Aux Settings
- Copy from [XW1]
- Reset to Defaults

To Monitor...

XW—— 0-00:Setup
- Advanced Settings
- Meters Menu
- Inverter [Disabled]
- Search Mode [Disabled]

Meters Menu

AC1 in Power	3200W
AC1 in L1	21.1A 120V
AC1 in L2	21.1A 120V
AC2 in Power	0W
AC2 in L1	21.1A 120V
AC2 in L2	21.1A 120V
Load Power	3200W
Load L1	21.1A 120V
Load L2	21.1A 120V
(Charging)	(Absorb)
DC	3.7A 57.4V
Bat Temp	20C

To Select Operating Mode...

XW—— 0-00:Setup
- Equalize [Disabled]
- Mode [Operating]
- Clear Faults/Warnings
- View Device Info

To Enable/Disable Features...

XW—— 0-00:Setup
- Inverter [Enabled]
- Search Mode [Disabled]
- Grid Support [Disabled]
- Charger [Enabled]
- Equalize [Disabled]

To Add New Devices...

XW—— 0-00:Setup
- Equalize [Disabled]
- Mode [Operating]
- Clear Faults/Warnings
- View Device Info

View Device Info
- View Warning Log
- View Fault Log
- View Event Log

Advanced Settings
- Multi-Unit Stacking
- Inverter Settings
- Charger Settings
- AC Settings
- Grid Support
- Gen Support
- Aux Settings
- Copy from [XW1]
- Reset to Defaults

Stack

Dev Name	[XW1]
Dev Number	[00]
Inv Mode	[SplitPhMaster]
Charger Mode	[Primary]
Connections	

Connections

DC Conn	[Unknown]
AC Out	[Unknown]
AC1	[Grid 1]
AC2	[Gen 1]

Inverter Settings

Low Batt Cut Out	[44.0V]
LBCO Delay	[15m]
Hi Batt Cut Out	[64.0V]
Search Watts	[50.0W]
Search Delay	[2s]

Charger Settings

Time of Use	
Max Chg Rate	[100%]
Charge Cycle	[3-Stage]
ReCharge Volts	[47.5V]
Batt Type	[Flooded]
Custom Settings	
Batt Capacity	[200Ah]
Default Batt Temp	[Warm]

ToU

ToU Timer	[Disabled]
Charger Start	[04:00PM]
Charger Stop	[09:00PM]

Custom

Eqlz Support	[Off]
Eqlz Voltage	[64.0V]
Bulk Voltage	[57.6V]
Float Voltage	[54.0V]
Exit to Bulk	[50.0V]
Absorb Time	[120min]
Batt Temp Comp	[100mV/K]

AC Settings

AC Priority	[AC1]
AC1 Breaker	[60A]
AC1 Lo Volt	[106V]
AC1 Hi Volt	[132V]
AC1 Lo Freq	[55 Hz]
AC1 Hi Freq	[65 Hz]
AC2 Breaker	[60A]
AC2 Lo Volt	[106V]
AC2 Hi Volt	[132V]
AC2 Lo Freq	[55 Hz]
AC2 Hi Freq	[65 Hz]

Grid Support

Grid Supp Volts	[53.0V]
Sell	[Disabled]
Max Sell Amps	[25A]
Load Shave	[Disabled]
Load Shave Amps	[0A]
Load Shave Start	[04:00PM]
Load Shave Stop	[09:00PM]

Gen Support

GenSup Mode	[Enabled]
GenSup Amps	[0A]

Aux Settings

Manual Aux	[Manual off]
Active Lvl	[Active High]
Trig Src	[LowBattV]
Trigger Level	[42.0V]
Trigger Delay	[1 sec]
Clear Level	[48.0V]
Clear Delay	[1 sec]

To access the Advanced Menu:
Press all 3 of these buttons at the same time.
Enter ∧ ∨

975-0238-01-01 Rev A11 XW Install Ovrv.vsd 12/11/2006

CU 593

System Control Panel II (SCPII) - Menu Map for Auto Gen Start

xantrex

Use the System Control Panel II to configure generator functions and options.

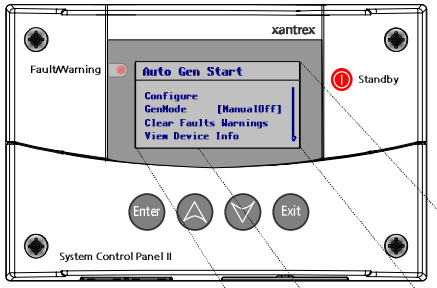

Auto Gen Start
Configure
GenMode [ManualOff]
Clear Faults Warnings
View Device Info

Main Menu

To Configure....

Auto Gen Start
Configure
GenMode [ManualOff]
Clear Faults Warnings
View Device Info

Configure
QT EN [On]
QT Begin [9:00PM]
QT END [8:00AM]
Gen Type [Z]
Cfg Trigger
Cfg Gen
Connections
Dev Name [AGS]
Dev Number [00]
Restore Defaults

Cfg Trigger
Start DCV 30 Sec [44.0V]
Start DCV 15 Min [Off]
Start DCV 2 hr [Off]
Start DCV 24 hr [Off]
Stop Float [On]
Stop Absorb [Off]
StopV [Off]
En Temp1 [Off]
En Temp2 [Off]
En Load [Off]
Strt Load [15A]
Stop Load [10A]

Cfg Gen
Starter Cool Down [60sec]
Max Runtime [3hours]
Exercise per [21days]
Exercise Dur [30 min]
Exercise Time [9:00 AM]
Relay 3 [Not Used]
Gen Run Hold Time [0.5s]
Crank Delay [1sec]
Crank Time [30sec]
Crank Retry Time [40sec]
Preheat Time [0sec]
Gen Start Tries [3]

Connections
DC Conn [Unknown]
AC Out [Unknown]
AC1 [Grid 1]

To Select Mode...

Auto Gen Start
Configure
GenMode [ManualOff]
Clear Faults Warnings
View Device Info

To Clear Faults Warnings...

Auto Gen Start
Configure
GenMode [ManualOff]
Clear Faults Warnings
View Device Info

To View Device Information...

Auto Gen Start
Configure
GenMode [ManualOff]
Clear Faults Warnings
View Device Info

View Device Info
View Warning Log
View Fault Log

To Navigate within the menus or change settings....

- Enter — Displays the next screen or confirms selection of a menu item.
- Scrolls up one line of text or increases a selected value.
- Scrolls down one line of text or decreases a selected value.
- Exit — Cancels selection of a menu item or displays the previous screen.

To access the Configuration Menu:

Press all 3 of these buttons at the same time.

Enter

975-0238-01-01 Rev A11 XW Install Ovrv.vsd 12/11/2006

CU 594

CU 594

System Control Panel II (SCPII) - Menu Map for MPPT Charge Controller

xantrex

Use the System Control Panel II to configure Charge Controller functions and options.

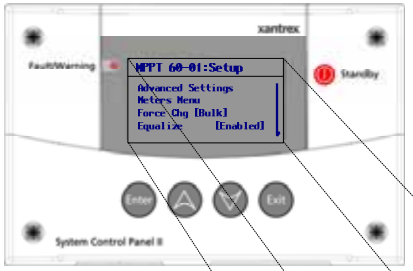

MPPT 60-01:Setup
Advanced Settings
Meters Menu
Force Chg [Bulk]
Equalize [Enabled]

Main Menu

To Configure....

MPPT 60-01:Setup
Advanced Settings
Meters Menu
Force Chg [Bulk]
Equalize [Enabled]

Advanced Settings
Multi Unit Stacking
Charger Settings
Input Settings
Aux Settings
Copy from [MPPT 02]
Restore Defaults

Multi
Dev Name [MPPT]
Dev Number [01]
ChgrMode [Primary]
Connections

Connections
DC Conn [Unknown]
AC Out [Unknown]
ACI [Grid 1]

Chgr
Batt Voltage [49.0V]
Batt Type [Flooded]
Custom Settings
Batt Capacity [200Ah]
Max Chg Rate [100%]
Charge Cycle [3-Stage]
Default Batt Temp [Warm]

Cust
Eqlz Support [Off]
Eqlz Voltage [64.0V]
Bulk Voltage [57.6V]
Float Voltage [54.0V]
Exit to Bulk [50.0V]
Absorb Time [120min]
Batt Temp Comp [100mV/K]

Input
MPPT AutoTrack [Off]
MPPT Ref Volts [100.00V]

Aux
Manual Aux [ManualOff]
Active Lvl [Active High]
Trig Src [LowBattV]
Trigger Level [42.0V]
Trigger Delay [1 Sec]
Clear Level [48.0V]
Clear Delay [1 Sec]

Or....

Aux
Manual Aux [ManualOn]
Active Lvl [Active High]
Trig Src [LowBattV]
Trigger Level [42.0V]
Trigger Delay [1 Sec]
Clear Level [48.0V]
Clear Delay [1 Sec]

Or....

Aux
Manual Aux [Automatic]
Active Lvl [Active High]
Trig Src [LowBattV]
Trigger Level [42.0V]
Trigger Delay [1 Sec]
Clear Level [48.0V]
Clear Delay [1 Sec]

To Monitor...

MPPT 60-01:Setup
Advanced Settings
Meters Menu
Force Chg [Bulk]
Equalize [Enabled]

Meters
PV In Power (21.5W)
PV In (2.1A) (100.5V)
DC Out Power (210W)
DC Out (3.7A) (57.4V)
Today (3.5Ah) (0.20kWh)
Life (0.1KAh) (5kWh)
Batt Temp (20C)
(Charging) (Absorb)
(Aux Off)

To Enable/Disable Features...

MPPT 60-01:Setup
Advanced Settings
Meters Menu
Force Chg [Bulk]
Equalize [Enabled]

MPPT 6001:Setup
Advanced Settings
Meters Menu
Force Chg [Bulk]
Equalize [Enabled]

To Select Operating Mode...

MPPT 60-01:Setup
Equalize [Enabled]
Mode [Operating]
Clear Faults Warnings
View Device Info

MPPT 60-01:Setup
Equalize [Enabled]
Mode [Standby]
Clear Faults Warnings
View Device Info

To Clear Faults Warnings...

MPPT 60-01:Setup
Equalize [Enabled]
Mode [Operating]
Clear Faults Warnings
View Device Info

To View Device Information...

MPPT 60-01:Setup
Equalize [Enabled]
Mode [Operating]
Clear Faults Warnings
View Device Info

View Device Info
View Warning Log
View Fault Log

To Navigate within the menus or change settings....

- Enter — Displays the next screen or confirms selection of a menu item.
- Scrolls up one line of text or increases a selected value.
- Scrolls down one line of text or decreases a selected value.
- Exit — Cancels selection of a menu item or displays the previous screen.

To access the Configuration Menu:

Press all 3 of these buttons at the same time.

Enter

Dual-Inverter System with Renewable Energy (Solar)

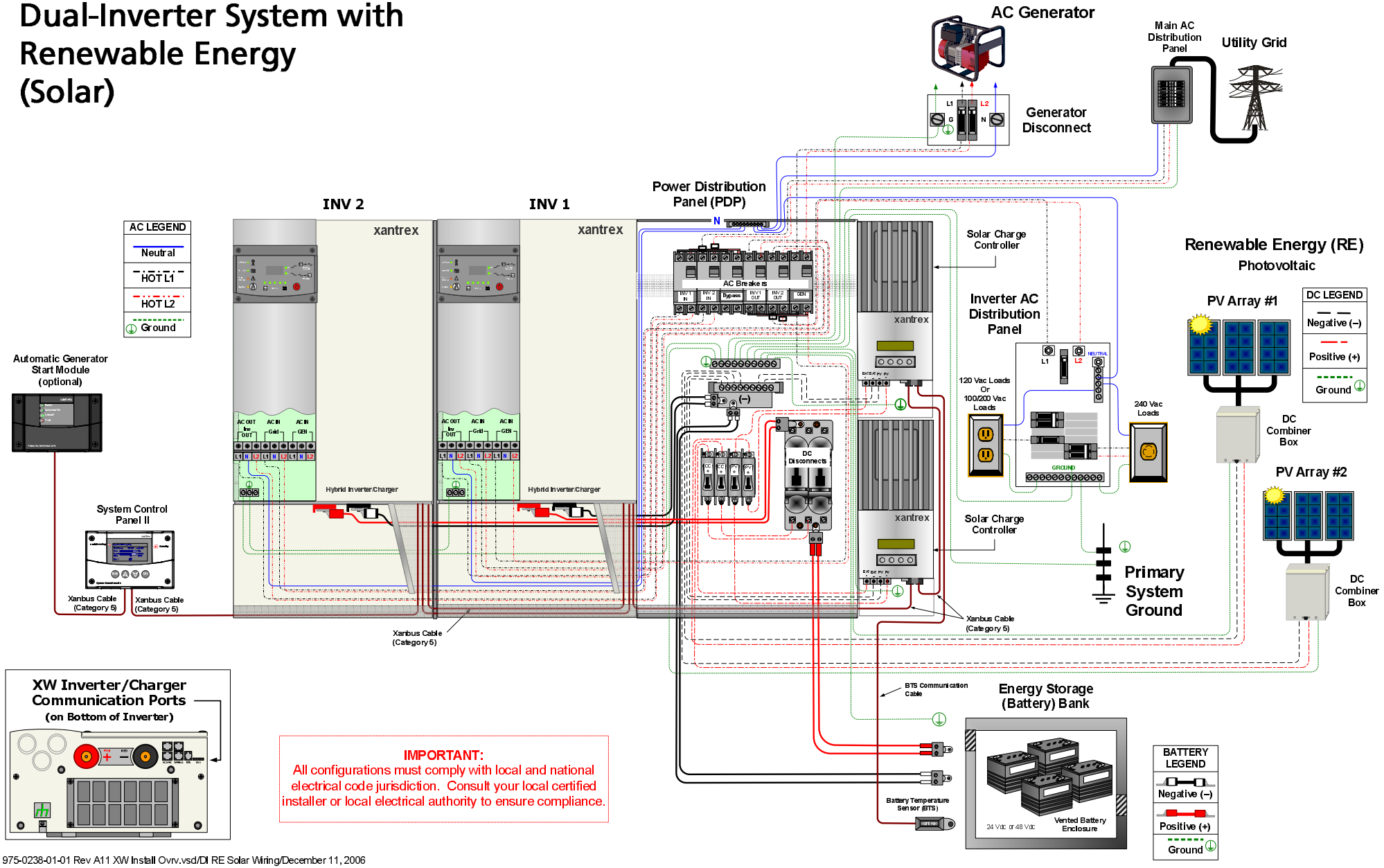

975-0238-01-01 Rev A11 XW Install Ovrv.vsd/DI RE Solar Wiring/December 11, 2006

CU 596

Dual-Inverter System with Renewable Energy (with Diversion Loads)

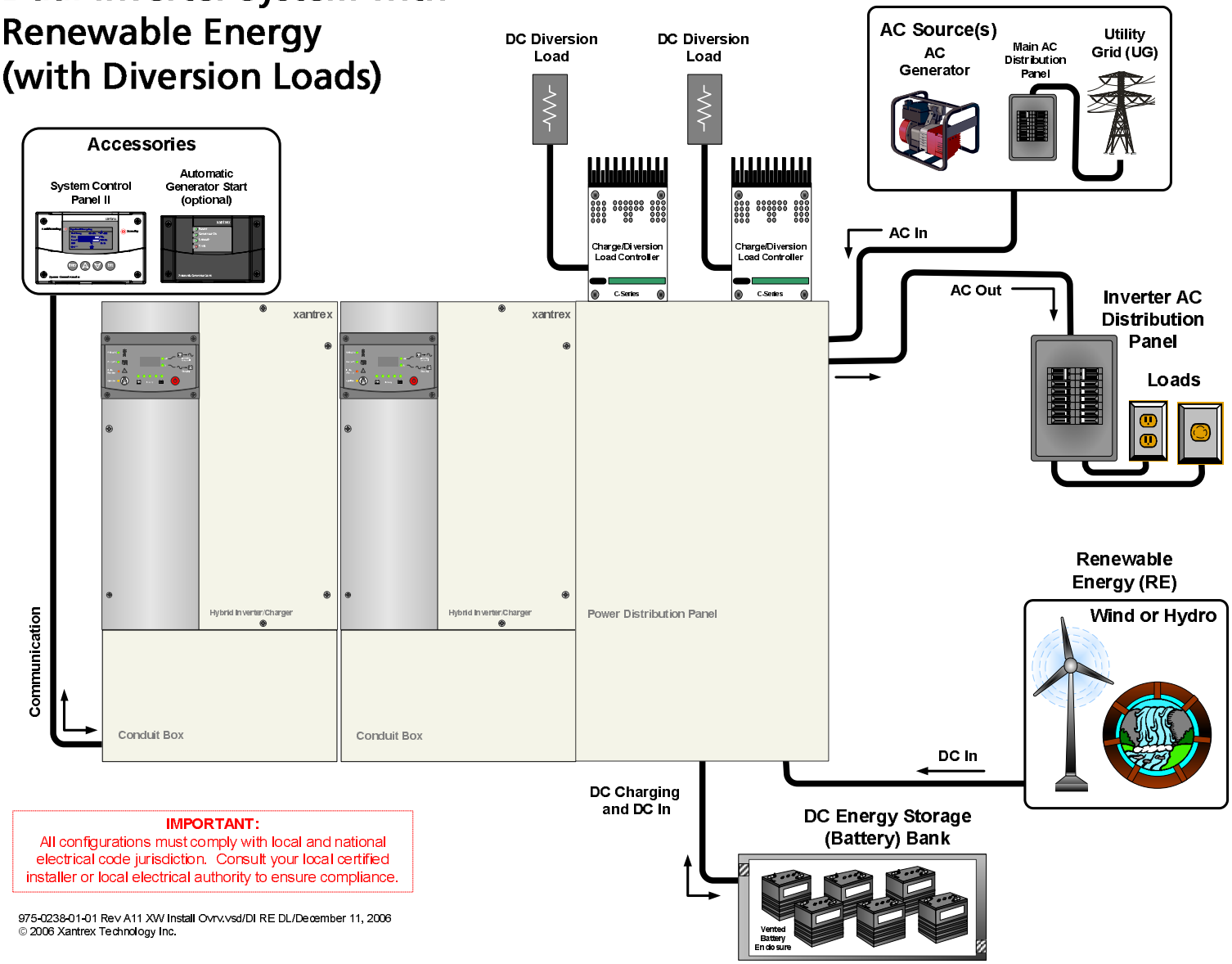

IMPORTANT:
All configurations must comply with local and national electrical code jurisdiction. Consult your local certified installer or local electrical authority to ensure compliance.

975-0238-01-01 Rev A11 XW Install Ovrv.vsd/DI RE DL/December 11, 2006

Xantrex Supplied Components:

- **XW Inverter/Charger** includes
  - Mounting Plate
  - Battery Temperature Sensor
- **Power Distribution Panel** includes
  - Mounting Plate
  - Xonduit Box for XW Inverter
  - three 60A, 120/240 Vac, 2-pole, Square-D type QOU, Din-Rail mounted, AC breakers for Inverter Input, Output and Bypass with Interlock
  - one Ground Terminal Bus Bar
  - one AC Neutral Bus Bar
  - #6 AWG AC wiring for inverter connection to breakers
  - DC Negative Bus Bar
  - one GJ250A, 160 Vdc 2/8" studded, DC Breaker with Copper Bus Bar
  - #4/0 Battery Cables
- **Conduit Box Extension Kit** includes
  - Conduit Box for second XW Inverter
  - two 60A, 120/240 Vac, 2-pole, Square-D type QOU, Din-Rail mounted, AC breakers for Inverter Input, output and Bypass with interlock
  - #6 AWG AC wiring for inverter connection to breakers
  - one GJ250A, 160 Vdc 2/8" studded, DC Breaker with copper bus bar
  - #4/0 Battery Cables for second Inverter
- **Solar Surveyor Charge Controller** includes
  - Battery Temperature Sensor
- **System Control Panel II** includes
  - Mounting Bracket
  - Xanbus Network Terminator
- **Automatic Generator Start II (optional)** includes
  - Xanbus Network Terminator
  - Wiring Harness

Customer Supplied Components:

- Battery Bank (24 Vdc or 48 Vdc)
- Generator and/or Grid Connection
- Solar Panels and associated cabling
- DC Combiner Boxes (may or may not be required)
- Inverter AC Distribution Panel to Loads
- Wiring and cabling to and from the system
- Cat 5 Cable for Inverter Stacking
- Cat 5 Communication Cable for system Control Panel II and/or Automatic Generator Start II Module (If used)
- All breakers for loads and peripheral disconnects (e.g., generator disconnect)

CU 597

Dual-Inverter System (Renewable Energy with Diversion Loads)

IMPORTANT:
All configurations must comply with local and national electrical code jurisdiction.
Consult your local certified installer or local electrical authority to ensure compliance.

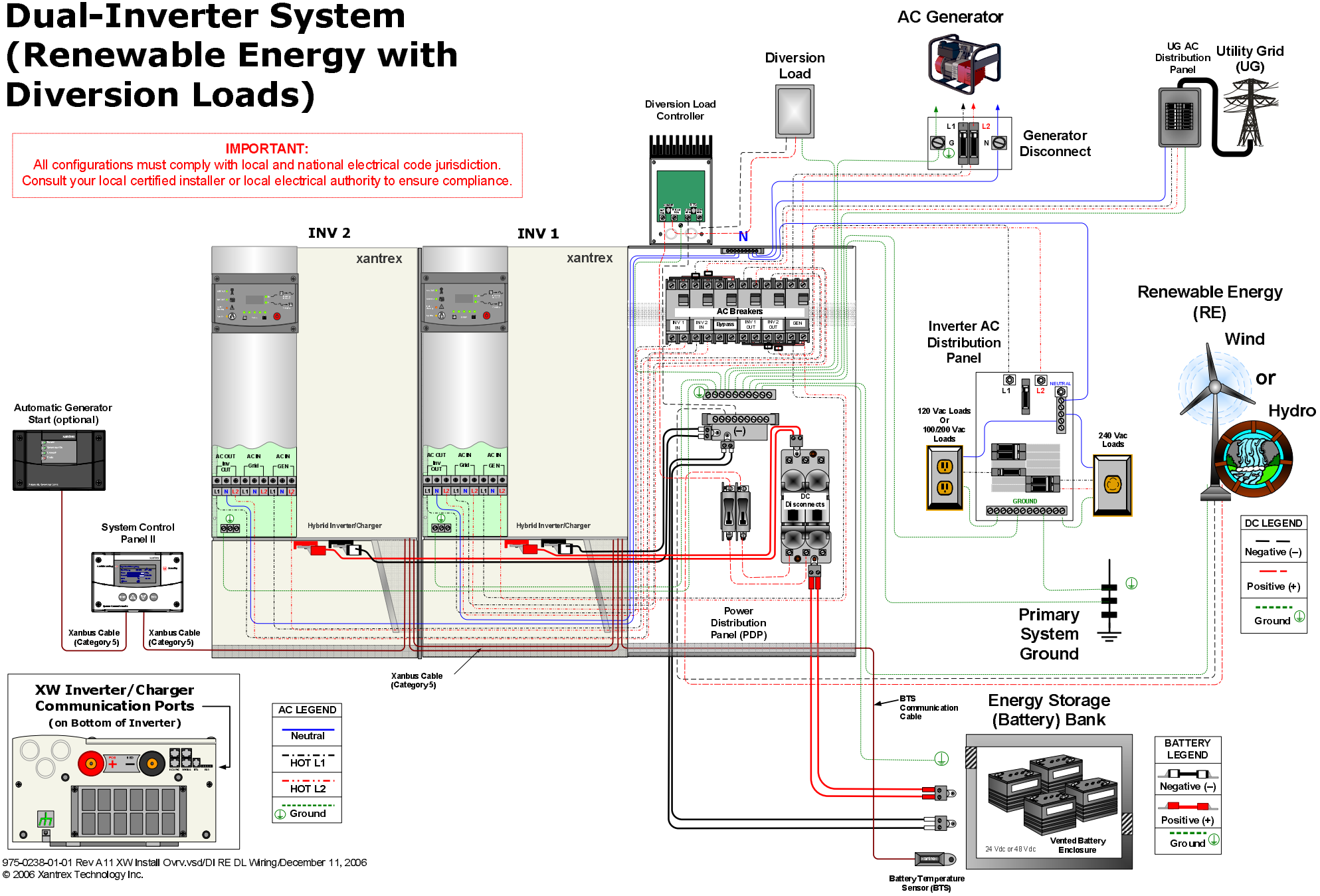

975-0238-01-01 Rev A11 XW Install Ovrv.vsd/DI RE DL Wiring/December 11, 2006

CU 598

THE SPECS

Trojan
BATTERY COMPANY

PRODUCT SPECIFICATION GUIDE

- Since 1925, Trojan has been the world's leading manufacturer of deep cycle batteries.
- Trojan batteries are a clean, reliable power source for golf, electric vehicle, floor machine, AWP, RV, marine, mobility and renewable energy.
- Trojan's proprietary Maxguard® Advanced Design Separator and exclusive Alpha Plus® Paste Formulation deliver longer life and enhanced performance.
- Trojan offers outstanding technical support; talk to an applications engineer at 800.423.6569 or visit www.trojanbattery.com for round the clock access.
- With a wide variety of superior products, Trojan has a battery to meet your needs.

CU
599

battery specifications

Including MINN KOTA Marine Batteries by Trojan®

BCI Group Size	Type	Capacity[A] (Minutes) @25 Amps	Capacity[A] (Minutes) @75 Amps	Cranking Performance CCA[B] @0°F	Cranking Performance CA[C] @32°F	5 Hr[D] Rate (AH)	20 Hr[E] Rate (AH)	Voltage	Terminal Config. (See Page 4)	Dimensions[F] inches (mm) L	Dimensions[F] inches (mm) W	Dimensions[F] inches (mm) H	Weight lbs. (kg)
DEEP CYCLE - 6 VOLT													
GC2	T-605	383	105	-	-	175	210	6	2,6,11	10 3/8 (264)	7 1/8 (181)	10 7/8 (276)	58 (26)
GC2	T-105	447	115	-	-	185	225	6	2,6,11	10 3/8 (264)	7 1/8 (181)	10 7/8 (276)	62 (28)
GC2	T-125	488	132	-	-	195	240	6	2,6,11	10 3/8 (264)	7 1/8 (181)	10 7/8 (276)	66 (30)
GC2H	T-145	530	145	-	-	215	260	6	2,6,11	10 3/8 (264)	7 1/8 (181)	11 5/8 (295)	72 (33)
DIN	TE35	500	135	-	-	200	245	6	2	9 5/8 (244)	7 1/2 (191)	10 7/8 (276)	68 (31)
N/A	J250G	475	130	-	-	195	235	6	11	11 5/8 (295)	7 (178)	11 7/8 (302)	67 (30)
N/A	J250P	540	135	-	-	215	250	6	7	11 5/8 (295)	7 (178)	11 1/2 (292)	72 (33)
N/A	J305G	620	170	-	-	255	310	6	11	11 5/8 (295)	7 (178)	14 3/8 (365)	90 (41)
N/A	J305P	675	175	-	-	270	315	6	7	11 5/8 (295)	7 (178)	14 3/8 (365)	91 (41)
N/A	J305H	745	195	-	-	285	335	6	7	11 5/8 (295)	7 (178)	14 3/8 (365)	97 (44)
N/A	L16G	750	185	-	-	305	370	6	1,11	11 5/8 (295)	7 (178)	17 (432)	106 (48)
N/A	L16P	805	200	-	-	320	390	6	1,7	11 5/8 (295)	7 (178)	16 3/4 (424)	113 (51)
N/A	L16H	885	225	-	-	345	420	6	7	11 5/8 (295)	7 (178)	16 3/4 (424)	121 (55)
DEEP CYCLE - 8 VOLT													
GC8	T-860	-	G	-	-	125	150	8	6	10 3/8 (264)	7 1/8 (181)	10 7/8 (276)	56 (25)
GC8	T-875	295	H	-	-	145	170	8	2,6,11	10 3/8 (264)	7 1/8 (181)	10 7/8 (276)	63 (29)
GC8	T-890	340	I	-	-	155	190	8	2,6,11	10 3/8 (264)	7 1/8 (181)	10 7/8 (276)	69 (31)
DEEP CYCLE - 12 VOLT													
24	24TMX	140	36	440	540	70	85	12	12	11 1/4 (286)	6 3/4 (171)	9 3/4 (248)	47 (21)
27	27TMX	175	45	530	650	85	105	12	12	12 3/4 (324)	6 3/4 (171)	9 3/4 (248)	55 (25)
27	27TMH	200	51	620	760	95	115	12	2,11,12	12 3/4 (324)	6 3/4 (171)	9 3/4 (248)	59 (27)
30H	30XHS	225	57	665	820	105	130	12	2,11,12	13 15/16 (355)	6 3/4 (171)	10 1/16 (256)	66 (30)
30H	31XHS	225	57	665	820	105	130	12	10	13 (330)	6 3/4 (171)	9 1/2 (241)	67 (30)
N/A	T-1275	290	J	-	-	125	150	12	13	12 7/8 (327)	7 (178)	10 7/8 (276)	82 (37)
N/A	J150	290	70	-	-	125	150	12	3	13 13/16 (351)	7 (178)	10 7/8 (276)	84 (38)
N/A	J185G	300	85	-	-	150	180	12	11	15 (381)	7 (178)	14 5/8 (371)	105 (48)
N/A	J185P	375	95	-	-	160	195	12	7	15 (381)	7 (178)	14 5/8 (371)	113 (51)
N/A	J185H	415	110	-	-	180	215	12	7	15 (381)	7 (178)	14 5/8 (371)	122 (55)
N/A	DC-500ML	1050	272	-	-	361	450	12	1,2	19 1/4 (489)	10 5/8 (270)	16 3/4 (425)	332 (151)
DEEP CYCLE - 36 VOLT													
N/A	18DC-500ML	1050	272	-	-	361	450	36	5	35 1/4 (895)	19 1/8 (486)	16 3/4 (425)	986 (447)

BCI Group Size	Type	Capacity[A] (Minutes) @25 Amps	Capacity[A] (Minutes) @75 Amps	Cranking Performance CCA[B] @0°F	Cranking Performance CA[C] @32°F	5 Hr[D] Rate (AH)	20 Hr[E] Rate (AH)	Voltage	Terminal Config. see page 4	Dimensions[F] inches (mm) L	Dimensions[F] inches (mm) W	Dimensions[F] inches (mm) H	Weight lbs. (kg)
VALVE REGULATED (GEL) - 12 VOLT													
24	SG-70	138	-	-	-	65	75	12	1,4	11 3/16 (279)	6 11/16 (168)	9 (223)	52 (24)
27	SG-90	169	-	-	-	77	86	12	1,4	13 1/16 (327)	6 11/16 (168)	9 (223)	61 (28)
TROJAN MARINE/RV DEEP CYCLE													
24	SCS150	150	36	530	650	80	100	12	8	11 1/4 (286)	6 3/4 (171)	9 3/4 (248)	50 (23)
27	SCS200	200	52	620	760	95	115	12	8	12 3/4 (324)	6 3/4 (171)	9 3/4 (248)	60 (27)
30H	SCS225	225	57	665	820	105	130	12	8	13 15/16 (355)	6 3/4 (171)	9 7/8 (251)	66 (30)
TROJAN MARINE/RV STARTING													
24	24SM-650	85	-	520	635	-	-	12	9	11 1/4 (286)	6 3/4 (171)	9 3/4 (248)	38 (17)
24	24SM-850	125	-	700	860	-	-	12	9	11 1/4 (286)	6 3/4 (171)	9 3/4 (248)	43 (20)
24	24SM-1000	165	-	825	1025	-	-	12	9	11 1/4 (286)	6 3/4 (171)	9 3/4 (248)	49 (22)
27	27SM-1100	205	-	860	1050	-	-	12	9	12 3/4 (324)	6 3/4 (171)	9 3/4 (248)	55 (25)
TROJAN MARINE/RV MAINTENANCE FREE STARTING													
24	24SM-850MF	125	-	700	860	-	-	12	9	10 3/16 (258)	6 1/2 (165)	9 7/16 (239)	43 (20)
24	24SM-1000MF	165	-	825	1025	-	-	12	9	10 3/16 (258)	6 1/2 (165)	9 7/16 (239)	49 (22)
TROJAN MARINE/RV DUAL PURPOSE													
24	24TMS	125	34	470	575	62	72	12	9	11 1/4 (286)	6 3/4 (171)	9 3/4 (248)	41 (19)
24	24TM	135	34	550	675	66	85	12	9	11 1/4 (286)	6 3/4 (171)	9 3/4 (248)	44 (20)
27	27TMS	145	39	550	675	73	85	12	9	12 3/4 (324)	6 3/4 (171)	9 3/4 (248)	48 (22)
27	27TM	160	38	630	770	79	105	12	9	12 3/4 (324)	6 3/4 (171)	9 3/4 (248)	50 (23)
TROJAN MARINE/RV AGM DUAL PURPOSE													
24	24-AGM	130	-	440	620	61	80	12	9	10 13/16 (259)	6 5/8 (168)	8 7/8 (226)	52 (24)
27	27-AGM	175	-	560	780	76	100	12	9	12 (305)	6 5/8 (168)	9 3/16 (233)	66 (30)
31	31-AGM	190	-	720	950	83	110	12	9	13 1/16 (208)	6 7/8 (174)	8 11/16 (221)	71 (32)
4D	4D-AGM	325	-	1110	1420	131	165	12	9	20 7/8 (530)	8 1/4 (209)	9 3/8 (237)	115 (52)
8D	8D-AGM	460	-	1450	1850	179	230	12	9	20 1/2 (521)	10 9/16 (269)	8 7/8 (226)	155 (70)
GC2	6V-AGM	385	-	1100	1400	154	200	6	9	10 1/4 (260)	7 1/16 (179)	10 5/8 (270)	65 (29)
MINN KOTA BY TROJAN DEEP CYCLE - 12 VOLT													
24	MK24DC	140	36	440	540	70	85	12	12	11 1/4 (286)	6 3/4 (171)	9 3/4 (248)	47 (21)
27	MK27DC	175	45	530	650	85	105	12	12	12 3/4 (324)	6 3/4 (171)	9 3/4 (248)	55 (25)
30H	MK31DC	190	50	575	710	100	120	12	12	13 15/16 (355)	6 3/4 (171)	9 7/8 (251)	66 (30)
MINN KOTA BY TROJAN DUAL PURPOSE STARTING/DEEP CYCLE - 12 VOLT													
24	MK24DP	125	34	470	575	62	72	12	9	11 1/4 (286)	6 3/4 (171)	9 3/4 (248)	41 (19)
27	MK27DP	145	39	550	675	73	85	12	9	12 3/4 (324)	6 3/4 (171)	9 3/4 (248)	48 (22)
MINN KOTA BY TROJAN STARTING - 12 VOLT													
24	MK550ST	65	-	420	515	-	-	12	9	11 1/4 (286)	6 3/4 (171)	9 3/4 (248)	36 (16)

A. Reserve Capacity or Capacity - the number of minutes a battery can be discharged at 25, 56 (Golf Deep Cycle batteries only) or 75 amps at 80°F and maintain a voltage above 1.75 v/cell.

B. C.C.A. (Cold Cranking Amps) - the discharge load in amperes which a new, fully charged battery can maintained for 30 seconds at 0°F at a voltage above 1.2 v/cell.

C. C.A. (Cranking Amps) - the discharge load in amperes which a new, fully charged battery can maintained for 30 seconds at 32°F at a voltage above 1.2 v/cell. This is sometimes referred to as marine cranking amps @ 32°F or M.C.A. @ 32°F.

D. 5 hour rate is based on IEC (International Electrotechnical Commission) temperature standard of 30°C (86°F).

E. 20 hour rate is a BCI sanctioned rating expressing ampere hours required to achieve an end voltage of 1.75 v/cell at 80°F and represents the batteries maximum capacity.

F. All dimensions taken from bottom of battery to top of terminal. Heights may vary according to type of terminals specified.

G. Capacity @56 Amps is 90 Minutes.

H. Capacity @56 Amps is 117 Minutes.

I. Capacity @56 Amps is 132 Minutes.

J. Capacity @56 Amps is 102 Minutes.

terminal configurations

1 "L" Terminal (LT)
2 Automotive Post (AP)
3 Embedded AP with Stud (EAPS)
4 Button Terminal
5 Cable and Plug
6 Low Profile Terminal (LPT)
7 AP and Stud Terminal (DT)
8 Dual Wingnut Terminal (DWNT)
9 Marine Dual Terminal (APW)
10 Stud Terminal
11 Universal Terminal (UT)
12 Wingnut (WNT)
13 Embedded Low Profile Terminal (ELPT)

”L” Terminal (LT)

Automotive Post (AP)

Embedded AP with Stud Terminal (EAPS)

Button Terminal

Low Profile Terminal (LPT)

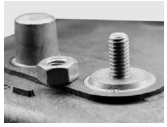

AP and Stud Terminal (DT)

Dual Wingnut Terminal (DWNT)

Marine Dual Terminal (APW)

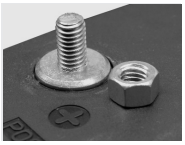

Stud Terminal

Universal Terminal (UT)

Wingnut Terminal (WNT)

Embedded Low Profile Terminal (ELPT)

AVAILABLE FROM TROJAN MASTER DISTRIBUTORS WORLDWIDE

Photos are for reference only.

Trojan® BATTERY COMPANY

For a Master Distributor near you, call 800-423-6569 or 562-946-8381
or visit www.trojanbattery.com.
Clean energy for life™

Global Electric Motorcars, LLC
2007 MY Specifications & Details

CU 603

CU 603

GEM eS Specifications

Curb Weight	1,160 lbs
GVW	1,850 lbs
Payload Capacity (options + passengers + cargo)	690 lbs
Length	108"
Height	70"
Width	55"
Wheelbase	72"
Turning Circle	24 ft
Tires	12-inch Street-rated
Range	Up to 30 miles
Top Speed	25 mph

GEM eS Standard Features

- Six 12-volt flooded electrolyte batteries
- 39" x 48" flat bed with a 330 lb cargo capacity

GEM eL Specifications

Curb Weight	1,230 lbs
GVW	2,300 lbs
Payload Capacity (options + passengers + cargo)	1,070 lbs
Length	144"
Height	70"
Width	55"
Wheelbase	114"
Turning Circle	35 ft
Tires	12-inch Street-rated
Range	Up to 30 miles
Top Speed	25 mph

GEM eL Standard Features

- Six 12-volt flooded electrolyte batteries
- 70" x 48" flat bed with a 700 lb cargo capacity

GEM eL XD Specifications

Curb Weight	1,570 lbs
GVW	3,000 lbs
Payload Capacity (options + passengers + cargo)	1,430 lbs
Length	144"
Height	71"
Width	55"
Wheelbase	114"
Turning Circle	35 ft
Tires	13-inch Street-rated
Range	Up to 40 miles
Top Speed	25 mph

GEM eL XD Standard Features

- Nine 8-volt maintenance-free gel batteries
- 70" x 48" flat bed with a 1,100 lb cargo capacity

CU 604

GEM e2 Specifications

Curb Weight	1,120 lbs
GVW	1,850 lbs
Payload Capacity (options + passengers + cargo)	730 lbs
Length	99"
Height	70"
Width	55"
Wheelbase	72"
Turning Circle	24 ft
Tires	12-inch Street-rated
Range	Up to 35 miles
Top Speed	25 mph

GEM e4 Specifications

Curb Weight	1,280 lbs
GVW	2,200 lbs
Payload Capacity (options + passengers + cargo)	920 lbs
Length	128"
Height	70"
Width	55"
Wheelbase	102"
Turning Circle	32 ft
Tires	12-inch Street-rated
Range	Up to 30 miles
Top Speed	25 mph

GEM e6 Specifications

Curb Weight	1,560 lbs
GVW	3,000 lbs
Payload Capacity (options + passengers + cargo)	1,440 lbs
Length	162"
Height	71"
Width	55"
Wheelbase	133"
Turning Circle	39 ft
Tires	13-inch Street-rated
Range	Up to 30 miles
Top Speed	25 mph

GEM e2 Standard Features

- Six 12-volt flooded electrolyte batteries

GEM e4 Standard Features

- Six 12-volt flooded electrolyte batteries
- Sunroof

GEM e6 Standard Features

- Six 12-volt maintenance-free gel batteries
- Sunroof
- Scuff Guards
- Right Hand Mirror
- Mud Guards
- Grab Handles

GEM e6 With "S" Package

- Nine 8-volt maintenance-free gel batteries
- 39" x 48" flat bed with a 440 lb cargo capacity

CU 605

Options	Model(s)					
	e2	e4	e6	eS	eL	eL XD
Interior						
Accessory Outlet (12-Volt)	•	•	•	•	•	•
Alpine Stereo System	•	•	•	•	•	•
Dome Light	•	•	•	•	•	•
Fan (Dash-mounted) NEW	•	•	•	•	•	•
Grab Handle Package	•	•		•	•	•
Heated Seats	•	•		•	•	•
Heater/Defogger	•	•	•	•	•	•
PA System	•	•	•	•	•	•
Scorecard Holder	•	•				
Scuff Guards	•	•		•	•	•
Steering Wheel Lock	•	•	•	•	•	•
Valet Bar		•	•			
Exterior						
Beacon Light	•	•	•	•	•	•
Chrome Bumper	•	•	•	•	•	•
Fast Charge Package NEW	•	•	•	•	•	•
Hard Door Trim	•	•		•	•	•
Hazard Lights	•	•	•	•	•	•
High-Low Beam Headlamps	•	•	•	•	•	•
LED Light Bar	•	•	•	•	•	•
Mud Guards NEW	•	•		•	•	•
Rear Window Insert	•	•	•	•	•	•
Right Hand Mirror	•	•		•	•	•
Rugged Bumper	•	•	•	•	•	•
Security Light Bar**	•	•	•	•	•	•
Doors						
Framed Canvas Doors*	•	•	•	•	•	•
Hard Doors	•	•		•	•	•
Soft Canvas Doors*	•	•	•	•	•	•

Options	Model(s)					
	e2	e4	e6	eS	eL	eL XD
Carriers						
Clip-In StakeBack™	•	•	•			
Enclosed Cargo Carrier***			•	•		
LinksBack™	•	•				
StakeBack™ Kit***			•	•	•	•
TrunkBack™	•	•	•			
Under the Hood						
Maintenance-Free Gel Batteries						
(Six 12-Volt Batteries)	•	•		•	•	
Maintenance-Free Gel Batteries						
(Nine 8-Volt Batteries)			•			
Windshield Washer Kit	•	•	•	•	•	•
Wheels						
10" Chrome	•					
12" Chrome	•	•		•	•	
10" Silver	•					
12" Silver	•	•		•	•	
13" Chrome Wheel Covers			•			•
Premium Colors						
Metallic Black	•	•	•	•	•	•
Metallic Blue	•	•	•	•	•	•
Metallic Silver	•	•	•	•	•	•
Accessories						
Bedcover***			•	•	•	•
Car Cover	•	•	•	•	•	•
Charging Cordset Kit	•	•	•	•	•	•
License Plate Bracket (Front)	•	•	•	•	•	•

*Available in black, blue, gray, or green.
**Available in amber, blue, or red.
***Available on the GEM e6 with the "S" Package.

CU 606

2007 SPECIFICATIONS & DETAILS

Safety

- Automotive-style, three point safety belts.
- 10-inch*, 12-inch, or 13-inch** street-rated tires.
- Quartz-halogen headlamps with a 20-second safety delay after vehicle is turned off, front and rear turn signals, high-mount rear brake and taillights.
- Laminated, tinted automotive safety glass with windshield wiper.
- Structural composite and thermoplastic body panels.
- Dual upper hand grips (optional) and lower seat rails.
- Rear and side reflectors.
- Rearview and dual exterior mirrors (driver's side standard, passenger side optional).

Design

- The GEM e2, eS, eL and eL XD seat two occupants with bench-style seating using molded-foam cushions covered by marine grade UV-stable vinyl coverings. The GEM e4 seats four occupants with front bucket seats and a rear bench seat. The GEM e6 seats six occupants with front and middle-row bucket seats and a rear bench seat.
- Four-wheel automotive-style hydraulic brakes and parking brake.
- Dual A-arm front independent suspension with coil over shock.
- Automotive rack-and-pinion steering.
- Welded aluminum space-frame using custom aluminum-alloy extrusions.

Technology

- Heavy-duty DC motor with continuous 5 horsepower rating and 12 horsepower peak during acceleration and hill climbing.
- Front-wheel drive with speed reducer and integral differential.
- Solid-state custom motor controller with under and over voltage detector, regenerative braking, motor thermal protection and top speed regulation.
- Six 12-volt flooded electrolyte batteries are standard on the GEM e2, e4, eS, and the eL. Six 12-volt maintenance-free gel batteries are standard on the GEM e6 and nine 8-volt maintenance-free gel batteries are standard on the GEM e6 with the "S" Package and the GEM eL XD.
- On-board 72-volt DC charger that plugs into standard 110-volt AC 15-amp outlet.

NEW STANDARD FEATURES FOR 2007

Reduced Steering Effort and Turning Circle Diameter

New steering system will reduce the amount of effort for steering by 36 %. The new system also reduces turning diameter.

Parking Brake Indicator

A lighted symbol appears in the vehicle's electronic driver's display when the parking brake is engaged. Additionally, when the parking brake is engaged, the vehicle is unable to move.

Turn Signal Reminder

When a turn signal is left in an "on" position, a reminder will begin to sound after 45 seconds to notify the driver the signal has not been turned off.

*GEM e2 model only.
**GEM e6 and GEM eL XD models only.

CU 607

GEM®

www.gemcar.com
1.888.871.4367

ISO Certified 9001:2000
GSA: GS-30F-0012N

Specifications, features, illustrations and equipment shown in this brochure are based upon the latest information available at the time of publication. Global Electric Motorcars, LLC, and DaimlerChrysler reserve the right to make changes at any time, without notice, to colors, specifications, options, materials and models. Any variations in colors shown are due to reproduction variations of the printing process. Some vehicles are shown with optional equipment. For additional information, please contact your authorized GEM dealership, whose name and location are easily found at gemcar.com.

v09-06

ENERGY STAR PARTNER

CU 608

CU 608

CUSD2007

fire safety

PRODUCT INFORMATION

THE REVOLUTION

Faster, Better Smarter

Cat. 9120/9120B Smoke Alarm

120V AC, 60Hz Wire-in
with 9V Battery Back-up (9120B)

The BRK Brands, Inc. Cat. Nos. 9120 and 9120B are wire-in, 120V AC 60Hz single and/or multiple station smoke alarms specifically designed for residential and institutional applications including sleeping rooms of hospitals, hotels, motels, dormitories and other multi-family dwellings as defined in standard NFPA 101. Models 9120 and 9120B comply with UL217, CSFM, NFPA 72, HUD, FHA and other agencies that model their codes after the above agencies. They meet building codes where AC and AC/DC with Silence smoke alarms are required. The alarms are interconnectable with up to 18 devices, of which 12 can be smoke alarms.

Dual ionization sensing chamber - screened for insect protection.

"Smart Technology" system - A system of improvements designed to reduce nuisance alarms. A redesigned cover, metal sensing chamber and new integrated circuit (IC) work together to reduce nuisance alarms.

"Latching Alarm Indication" - When interconnected in a series, the unit that triggered the alarm rapidly flashes its red LED indicator. After the alarm condition subsides, the initiating unit will store in memory or "latch" the information and begin to flash the green LED indicator 2 seconds on, 2 seconds off.

"Perfect Mount" system - features a gasketless base and a mounting bracket that keeps the alarm secure over a wide rotation range to allow for true alignment. This will allow fine-tuning on the positioning to compensate for out of aligned wall studs and to keep the wording level when wall mounting.

Single button test/silence - Eliminates confusion. Depending on what mode the alarm is in, pushing the button will test, silence, re-test the alarm when in silence and clear the latching feature.

85dB horn - meets UL standards

Easy access side-load battery drawer - Battery installation and removal can occur while the unit is mounted to the ceiling or wall via the side load battery compartment.

Battery backup power supply - on the 9120B model, keeps alarm working during a power failure, providing battery is installed properly and is fresh.

Other Contractor Preferred features

- A dust cover to keep alarm clean during construction.
- Keyhole slots in the mounting bracket eliminate the need to remove the junction box screws for installation.
- Two locking features are provided to prevent battery theft and/or theft of the unit.
- Connection to AC power is made with a "Quick-Connect" wiring harness. Installation is quick, easy and cost effective.

Available in the following versions:

9120	AC Alarm with silence
9120B	AC Alarm with silence and battery backup
9120AB	Same as 9120B but with alkaline battery
9120LB	Same as 9120B but with lithium battery

ISO 9002 — BSI Registered Firm—Certificate #FM21268 · IONIZATION · UL · LIMITED 10 YEAR WARRANTY

BRK® THE PROFESSIONAL STANDARD

SAVES YOU TIME - Reduces Nuisance Alarms - **SAVES YOU MONEY**

CAT. 9120, 9120B

120V AC, 60Hz Wire-in with 9V Battery Back-up (9120B)

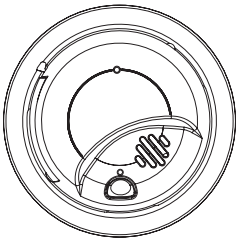

TOP VIEW

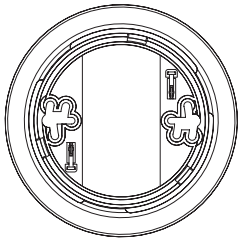

MOUNTING BRACKET

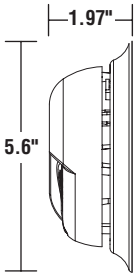

SIDE VIEW

Architectural and Engineering Specifications

1. The unit shall be capable of self restoring.
2. A screened sensing chamber to prevent entry of small insects thereby reducing the probability of unwanted nuisance alarms.
3. Powered by 120V AC, 60Hz and have a monitored 9V battery backup (model 9120B only).
4. A visual LED (green) power-on indicator to confirm unit is receiving power. A visual LED (red) power-on indicator to confirm unit is working properly.
5. A test button to check all alarm functions by stimulating the chamber to simulate a smoke condition, causing the unit to alarm.
6. A solid state piezo horn rated at 85dB minimum at 10 ft.
7. The unit shall be capable of operating between 40°F (4°C) and 100°F (38°C) and relative humidity between 10% and 90%.
8. The unit shall center mount to any standard electrical junction box up to 4 inches octagonal without screw removal and shall be listed for wall or ceiling mounting.
9. The unit shall have an optional locking mechanism to deter battery removal (model 9120B only) and /or theft of the unit.
10. The unit shall have a gasketless base for easy installation and be capable of keeping alarm secure over a wide rotation range to allow for true alarm alignment.
11. The unit shall have a plug in connector and be capable of interconnection of up to 18 alarms, 12 of which can be smoke alarms.
12. The unit shall at a minimum meet the requirements of UL217, CSFM, NFPA 72, NFPA 101, ICBO, BOCA, SBCCI and CABO.

Installation of Smoke Alarm

Installation of this smoke alarm must conform to all local electrical codes and Article 760 of the National Electrical Code (NFPA 70) and NFPA 72. Interconnected units must meet the following requirements: Total length of wire interconnecting units should be less than 1000 feet, be #18 gauge or larger and be rated at least 300V. It is recommended that all units be on the same fuse or circuit breaker. If local codes do not permit, be sure the neutral wire is common to both phases.

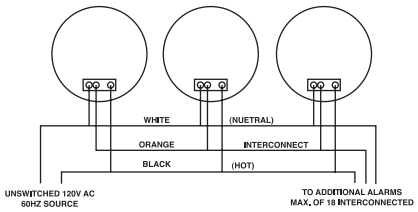

Technical Specifications

CU 611

Alarm Dimensions	5.58"dia x 1.97"H
Weight	6.5 oz (9120); 7.8 oz (9120B)
Operating Voltage	120V AC 60Hz w/ 9V battery backup
Operating Current	.04 amps (standby/alarm)
Temperature Range	40°F (4°C) to 100°F (38°C)
Humidity Range	10% to 90% relative humidity (RH)
Audio Alarm	85dB minimum at 10 feet
Test Button	Electronically simulates the smoke condition, causing the unit to alarm.
Alarm Reset	Automatic when smoke clears
Interconnections	Up to 18 units with Cat. Nos. 100S, 2002RAC, 4120, 4120AB, 4120B, 4120SAB, 4120SB, 4919, 5919, 5919TH, 7010, 7010B, 9120, 9120B, SC6120B, SC9120B, CO5120BN; CO5120PDBN, HD6135B, HD6135FB and RM-3. Maximum of 12 smoke alarms.
Sensor	Dual chamber ionization
Indicator LED	AC Power: Constant Green LED DC Power (9120B): Intermittent Red LED Remote Alarm: Red LED out Local Alarm: Red LED flashes rapidly Latching Alarm: Green LED flashes 2 sec. on/2 sec. off after local alarm stops
Listing	UL 217

Shipping Specifications

Individual Carton Dimensions	5.69"L x 2.25"W x 5.59"H
Weight	.53 lbs. (9120); .61 lbs. (9120B)
Cube	.041 ft^3
UPC	9120: 0 29054 51300 7 9120B: 0 29054 51301 4 9120AB: 0 29054 51302 1 9120LB: 0 29054 51303 8
Master Carton Dimensions	14.43"L X 6.19"W X 12.63"H
Master Pack	12
Weight	7.0 lbs. (9120); 7.9 lbs. (9120B)
Cube	.653 ft^3
UPC	9120: 100 29054 51300 4 9120B: 100 29054 51301 1 9120AB: 100 29054 51302 8 9120LB: 100 29054 51303 5
Pallet Information	
Cases per Layer	19
Number of Layers	3
Cases per Pallet	57
Cube	42.2 ft^3
Weight	359 lbs. (9120); 450 lbs. (9120B)

Manufactured By:
BRK Brands, Inc.
3901 Liberty Street Road
Aurora, IL 60504-8122
www.brkelectronics.com

Distributed By:

CU 611

AMEREX

HIGH PERFORMANCE

CU 612

PULL
AIM
SQUEEZE
SWEEP

...it's that simple!

CU 612

HIGH PERFORMANCE

- Exclusive galvanized cylinder - the best corrosion resistance
- Brass, chrome plated valve gauge guard - no aluminum parts
- 240 psi stored pressure design for less maintenance costs, fewer moving parts, fewer replacement parts,
- Simple P.A.S.S. operation , familiar to all potential extinguisher operators
- **FULL FILL** - No “nominal” fill sizes, 20 lbs. of Purple K in a 20 lb. Purple K extinguisher, 30 lbs. of ABC in a 30 lb. ABC extinguisher, etc...
- Extra large stainless steel handles and stainless steel ring pin for easy operation with gloves
- Stored pressure design prevents unnoticed tampering and clogged elbows or hoses
- Always - longest range of any hand portable on the market - greater operator safety
- **Charged with nitrogen** - all models operate down to -65°F
- Inexpensive to recharge, no cartridges to buy or exchange
- Molded vinyl ring to protect paint on the bottom
- Best warranty in the industry - **12 years**

Cut-away View

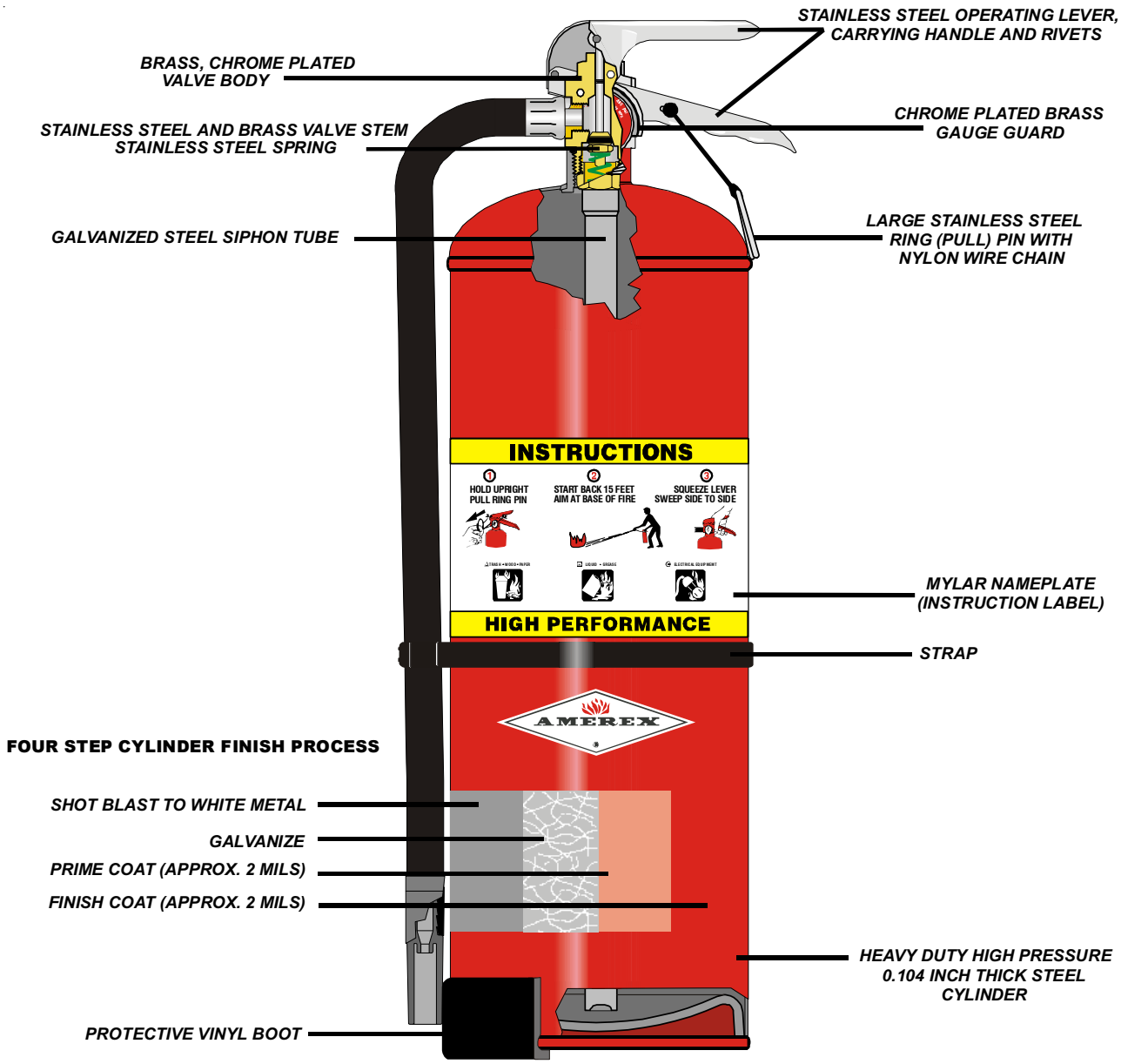

Amerex High Performance Stored Pressure Dry Chemical Extinguisher and Mounting Brackets

Presenting:

Superior Performance, Corrosion Resistance, Greater Safety, Greater Reliability, Extended Warranty and Low Maintenance Costs at an Affordable Price

The Best Extinguisher Value on the Market

Why buy Amerex High Performance?

Superior Performance -Amerex *High Performance* extinguishers all have greater range. The *Fast Flow* models offer discharges with more pounds of chemical per second - the key to combating flammable liquid fires involving three dimensions and flammable liquids/gases under pressure. Required by NFPA 10 section 2-3.1 and 2-3.3! Most flammable liquid hazards potentially involve three dimensional fires. *Fast Flow* units, in the hands of trained operators, provide the fastest and safest "knock down" of any fire extinguisher on the market today.

Greater Corrosion Resistance - Each hand portable is made with a *Galvanized Cylinder* - an Amerex exclusive. Most corrosion resistant finishes quit working when the paint is scratched or chipped. Our Galvanized cylinders (for the hand portables), carriages and wheels (for the wheeled units) are better than any mere paint finish.

Galvanizing - an Amerex *High Performance* exclusive!

Greater Reliability - Fewer parts means fewer things to go wrong. Stored pressure extinguishers have a modern, simple design for greater reliability. Two "O" ring seals compared to 6 seals and gaskets on cartridge operated extinguishers, four moving parts compared to nine moving parts on cartridge operated extinguishers. Cartridge operated extinguishers are susceptible to tampering and plugged hoses. None of this can happen to a stored pressure extinguisher.

Extended Warranty - A 12 year warranty on High Performance Hand Portable Extinguishers - the best in the Industry.

Low Maintenance Costs - Fewer parts and a simple design means lower maintenance and repair costs over the life of the extinguisher. Amerex High Performance Extinguishers use a 12 step procedure for annual maintenance in Compliance with NFPA 10. Cartridge Operated Extinguishers have a factory maintenance procedure containing over 40 steps. Recharging High Performance Extinguishers is inexpensive, no cartridges to replace.

Amerex High Performance - Stored Pressure Dry Chemical Wheeled Extinguishers

The Most Reliable Wheeled Extinguisher on the Market

Features:

- Galvanized carriage, wheels and hose rack unbolt from the agent cylinder. Damage to carriage or wheels does not ruin the extinguisher.
- Chrome plated brass (not aluminum) ball shut-off valve with swivel pistol grip.
- Full 250 lb. fill regardless of the type of chemical used - no "nominal" fill sizes.
- Stored pressure design means lower maintenance cost:

  No separate nitrogen cylinder to test
  No regulator to test
  Chemical cannot be contaminated without discharging unit
  No moisture seals to replace or inspect
  No high pressure hoses to test
  Fewer moving parts means fewer parts to replace

- 350 psi operating pressure has the longest range/highest flow rate available.
- Integral lift loops for loading/positioning on board.
- Separate 3 inch fill port with brass - chrome plated cap.
- Large easy to read pressure gauge with stainless steel gauge guard.
- Carriage design protects the agent cylinder and hose. Agent cylinder rests above the ground.
- 1" x 50' hose with brass "screwed compression fit" brass (not aluminum) booster hose couplings.
- Excellent for use in combined agent attacks (foam or water) to extinguish escape points of flammable liquids under pressure.

High Performance Extinguisher Specifications

Heavy Duty Galvanized Box Type Vehicle/Marine Brackets

Model 810G for 13.2 (6Kg) and 20 lb. (9Kg)
(7 inch diameter cylinder)

Model 811G for 30 lb. (13.6 Kg)
(8 inch diameter cylinder)

Includes Stainless Steel Locking Pin

Model No.	Agent Weight (lbs.)	Type	UL Rating	Shipping Weight (lbs.)	Height (inches)	Width (inches)	Depth (inches)	Discharge Time (sec.)	Discharge Rate (lbs./sec.)	Discharge Range (feet)
Hand Portable										
Fast Flow										
594	13.2	ABC	2A:40B:C	31	17½	10½	7	15	.94	40-50
581	20	ABC	4A:40B:C	42½	24¾	10½	7	18	1.20	40-50
567	30	ABC	4A:40B:C	58	26½	11	8	21	1.60	40-50
582	20	Regular	40B:C	42½	24¾	10½	7	15	1.40	40-50
568	30	Regular	40B:C	58	26½	11	8	17	1.00	40-50
595	13.2	Purple K	40B:C	31	17½	10½	7	15	.94	40-50
580	20	Purple K	40B:C	42½	24¾	10½	7	15	1.44	40-50
569	30	Purple K	40B:C	58	26½	11	8	16	1.00	40-50
584	20	Purple K	20B:C	42½	24¾	10½	7	10	2.00	40-50
Compliance Flow										
592	13.2	ABC	4A:80B:C	31	17½	10½	7	22	.59	40-50
564	20	ABC	20A:120B:C	42½	24¾	10½	7	30	.65	40-50
589	30	ABC	20A:160B:C	58	26½	11	8	34	.95	40-50
599	13.2	Purple K	80B:C	31	17½	10½	7	22	.61	40-50
566	20	Purple K	120B:C	42½	24¾	10½	7	29	.67	40-50
591	30	Purple K	160B:C	58	26½	11	8	34	.81	40-50
Wheeled										
Fast Flow										
573	250	ABC	40A:160B:C	775	60	37	44	50	4.80	60-80
575	250	Purple K	160B:C	775	60	37	44	38	6.60	60-80

CU 616

Amerex Exclusive Factory Refurbishing/Rebuilding Program

It is a well documented fact that highly corrosive marine conditions and/or rough industrial handling can cause havoc to the life of a fire extinguisher. The U.S. Coast Guard regularly rejects extinguishers for signs of corrosion and missing or damaged labels. In most cases, immediate and proper attention can greatly lengthen the service life of the equipment. Amerex, through its network of distributors, has established a "factory refurbishing/rebuilding program" which allows extinguishers to be returned to the factory to be completely rebuilt and labeled with a new U.L. / U.S. Coast Guard approved label at the fraction of the cost of a new unit. Please contact your Amerex distributor for full details.

Extended 12 Year Limited Warranty *

Amerex warrants its HIGH PERFORMANCE fire extinguishers to be free from defects in material and workmanship for a period of **TWELVE (12) YEARS (up to but not including hydrotest)** from the date of purchase. During the warranty period, any such defects will be repaired or replaced if the original factory seal is intact and/or if only factory replacement parts and recommended service equipment have been used to service the extinguisher. This warranty does not cover defects resulting from modification, alteration, misuse, exposure to corrosive conditions nor improper installation or maintenance. **(EXCLUDED ITEMS: HAND PORTABLES - HOSE ASSEMBLY AND PRESSURE GAUGE; WHEELED UNITS - CARRIAGE, WHEELS, PRESSURE GAUGE AND HOSE ASSEMBLY** - these items carry the standard Amerex six (6) year warranty). **ALL IMPLIED WARRANTIES, INCLUDING, BUT NOT LIMITED TO, WARRANTIES OF FITNESS FOR PURPOSES AND MERCHANTABILITY, ARE LIMITED TO THE TIME PERIODS AS STATED ABOVE. IN NO EVENT SHALL AMEREX CORP. BE LIABLE FOR INCIDENTAL OR CONSEQUENTIAL DAMAGES.** Some states do not allow limitations on how long an implied warranty lasts or the exclusion or limitation of incidental or consequential damages, so the above exclusions may not apply to you. Amerex Corp. neither assumes nor authorizes any representative or other person to assume for it any obligation or liability other than as expressly set forth herein. This warranty gives you specific legal rights, and you may also have other rights which vary from state to state.

For additional information write to: Amerex Corporation - P.O. Box 81, Trussville, AL 35173.
* Please refer to warranty refurbishing program for guidelines.

"Quality is Behind the Diamond"

AMEREX ®

ISO 9002 Registered Firm

AMEREX CORPORATION

P.O. Box 81 ❖ Trussville, AL 35173

Ph: (205) 655-3271 ❖ Fax: (205) 655-5112

e-mail: sales@amerex-fire.com

website: www.amerex-fire.com

Presented by: