leaf house

at the University of Maryland

http://www.solarteam.org

A Joint Project of the UMD School of Architecture, Planning and Preservation and the A. James Clark School of Engineering

Specs

08.07.07

PROJECT INFORMATION

Project Name:	LeafHouse
Project Number:	2007-001
City, ST:	College Park, MD
Date Created:	2007-02-28
Date Revised:	2007-08-03

Owner/Tenant:	University of Maryland
Estimated Construction Cost:	$690000

Summary: A joint venture of the School of Architecture, Planning, and Preservation, and the A. James Clark School of Engineering.

Firm Name:	University of Maryland School of Architecture, Planning, and Preservation
Project Principal:	Team LeafHouse
Project Architect:	Team LeafHouse
Project Designer:	Team LeafHouse

OUTLINE SPECIFICATIONS

TABLE OF CONTENTS

END OF TABLE OF CONTENTS

DOCUMENT 00910

ADDENDA AND MODIFICATIONS

1. Date: February 28, 2007

2. Re: Modification No. [1]

3. Project: LeafHouse

4. This Addendum forms part of and modifies Bidding and Contract Documents for the project named above. Acknowledge receipt of this Addendum on the Bid Form.

5. Where any original item called for in the Project Manual or indicated on the Drawings is supplemented by this addendum, the supplemental requirements shall supersede the previous item.

6. Where any original item is amended, voided, or superseded hereby, the other provisions of such items not specifically amended, voided, or superseded shall remain in effect.

7. This addendum consists of the following:

   This specification set is intended to replace, in its entirety, the Design Document (DD) specifications.

END OF DOCUMENT

DOCUMENT 00910

ADDENDA AND MODIFICATIONS

1. Date: August 3, 2007

2. Re: Modification No. [2]

3. Project: LeafHouse

4. This Addendum forms part of and modifies Bidding and Contract Documents for the project named above. Acknowledge receipt of this Addendum on the Bid Form.

5. Where any original item called for in the Project Manual or indicated on the Drawings is supplemented by this addendum, the supplemental requirements shall supersede the previous item.

6. Where any original item is amended, voided, or superseded hereby, the other provisions of such items not specifically amended, voided, or superseded shall remain in effect.

7. This addendum consists of the following:

   a) Updated cover sheet
   b) Addition of Engineering Specifications
   c) Substantial revision to all divisions
   d) Addition of Division 2

END OF DOCUMENT

DOCUMENT 00911

STRUCTURAL CALCULATIONS

1. Date: March 1, 2007

2. Re: Structural Calculations

3. Issued: March 1, 2007

4. From: Robert Silman & Associates
1053 31st St
Washington, DC 20007

5. These structural calculations form part of and modify Bidding and Contract Documents for the project named above.

6. Where any original item called for in the Project Manual or indicated on the Drawings is supplemented by this addendum, the supplemental requirements shall supersede the previous item.

7. Where any original item is amended, voided, or superseded hereby, the other provisions of such items not specifically amended, voided, or superseded shall remain in effect.

8. This addendum consists of this document and the following attachments:

Structural calculations, 78 pages

END OF DOCUMENT

ROBERT SILMAN ASSOCIATES
STRUCTURAL ENGINEERS

PRINCIPALS
Robert Silman
Joseph F. Tortorella
Kirk Mettam
Nat Oppenheimer
Edmund Meade

1053 31st Street, NW
Washington, DC 20007
P 202.333.6230
F 202.318.3015
www.silman.com

STRUCTURAL CALCULATIONS

Leafhouse
University of Maryland

3-1-07

PREPARED FOR:
University of Maryland
College Park, MD 20742

BY:
Christopher Cobb, P.E.
ROBERT SILMAN ASSOCIATES, PLLC
1053 31st Street, NW
Washington, DC 20007
Checked by: Kirk Mettam

Contents: **Page**

Signed:

DISTRICT OF COLUMBIA
KIRK I. METTAM
No. 900764
LICENSED
PROFESSIONAL ENGINEER

ROBERT SILMAN ASSOCIATES, PLLC

ROBERT SILMAN ASSOCIATES, PLLC
STRUCTURAL ENGINEERS
1053 31ST NW, WASHINGTON DC 20007

PROJECT Solar Decathlon JOB NO. PAGE 1

SUBJECT Design Loads Summary BY AE DATE 2·27·07

Snow: 30 psf

Dead: Flat Roof: 20 psf

Sloped Roof: 30 psf

Roof w/ Solar Water Heater: 40 psf

Wind: Roof C&C Uplift: Overhang: -50 psf

Sloped: -41.5 psf

Flat: -44.5 psf

See Wind Section of Calc. Packet for MWFRS

Live: Floor: Deck: 100 psf

Means of Egress: 100 psf

House: 50 psf

PROJECT Solar Decathlon JOB NO. PAGE 2

SUBJECT Roof Live Loads BY AE DATE 2-27-07

• From ASCE 7-02

$L_r = 20 R_1 R_2$

$\theta \not\leq 20°$, $R_2 = 1.2 - .05(4.36764) = .98$, use 1.0

For $A_t \leq 200 ft^2$, $R_1 = 1.0$

$R_1 = 1.2 - 0.001 \times A_t$ for $200 ft^2 < A_t < 600 ft^2$

ROBERT SILMAN ASSOCIATES, PLLC
STRUCTURAL ENGINEERS
1053 31ST NW, WASHINGTON DC 20007

- ASCE 7-02
  - $p_g = 30$ psf (From Fig. 7-1)
  - $I = 1.0$ $C_e = 1.0$ $C_t = 1.1$
  - $p_f = .7 C_e C_t I p_g = .7 \times 1 \times 1 \times 1.1 \times 30 = 23.1$ psf (use MIN. = 30 psf)
  - $C_s = 1.0$
  - $p_s = C_s p_f = 1 \times 23.1 = 23.1$ psf (use MIN. = 30 psf)

<u>Snow governs over Roof Live</u>

SLOPED ROOF STRUCTURE

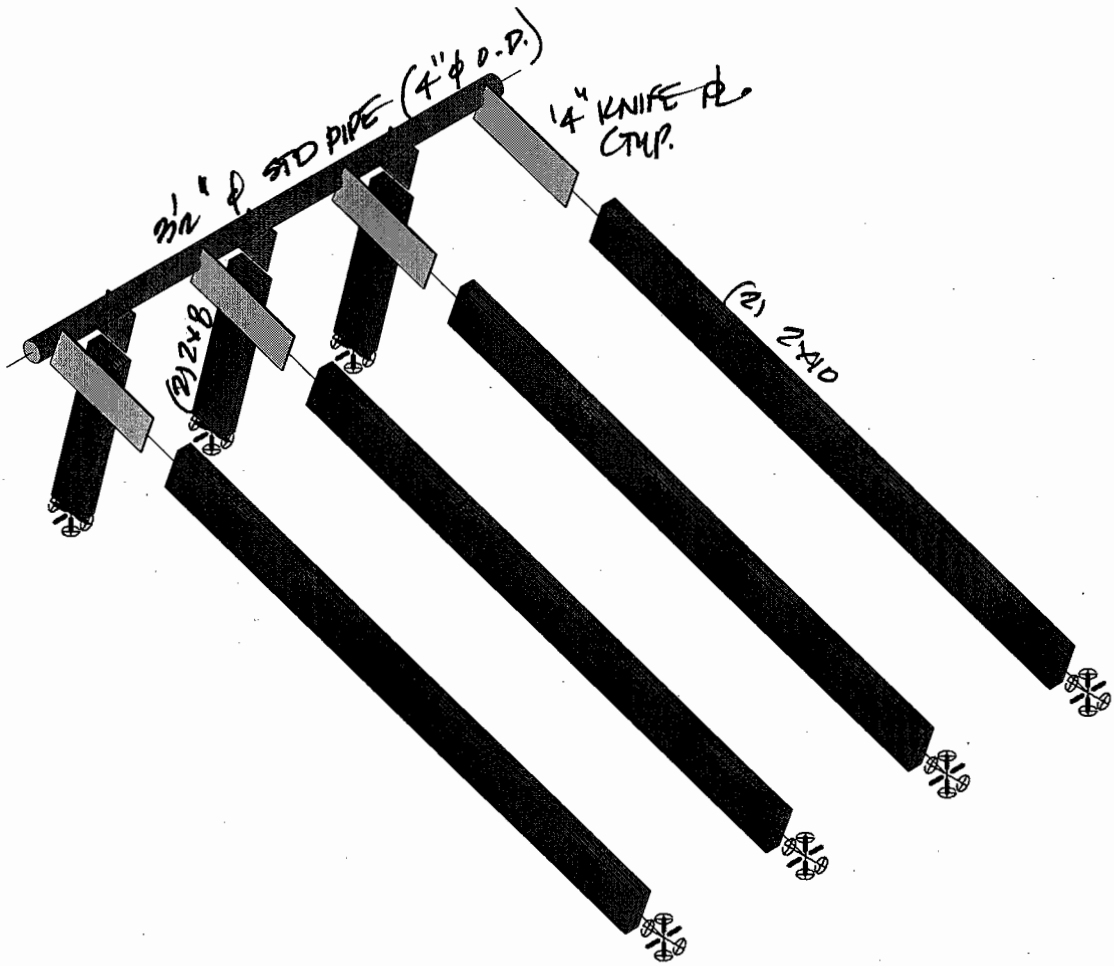

Beam: ***rafter VI***

Shape: **2-2X10**
Material: **DF Larch**
Length: **10.51 ft**
I Joint: **RVI**
J Joint: **XVI**
LC 1: Total
Code Check: **0.888 (bending)**
Report Based On 97 Sections

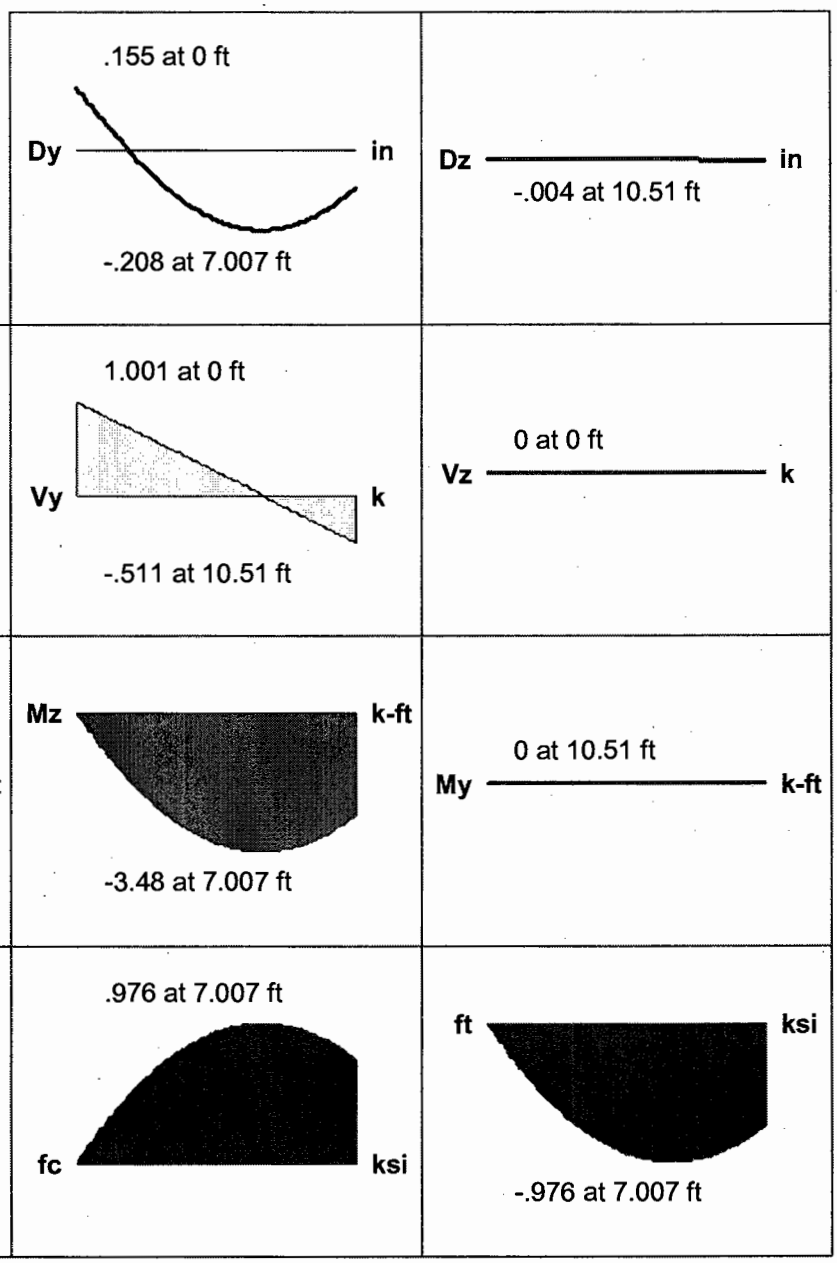

NDS 1991/97 Code Check

Max Bending Check	**0.888**	Max Shear Check	**0.570 (y)**
Location	**7.007 ft**	Location	**0 ft**
Equation	**3.9-1**	Max Defl Ratio	**L/602**

CD	**1**	RB	**5.738**	CH	**1**	CL	**1**
Cr	**1**	Cfu	**1.2**	Cf	**1**	CP	**.852**

	(ksi)	Cm	Ct	CF
Fc'	**1.277**	**1**	**1**	**1**
Ft'	**.743**	**1**	**1**	**1.1**
Fb1'	**1.1**	**1**	**1**	**1.1**
Fb2'	**1.32**	**1**	**1**	**1.1**
Fv'	**.095**	**1**	**1**	
E'	**1700**	**1**	**1**	

	Y-Y	Z-Z
Lb	**2.67 ft**	**10.51 ft**
le/d	**10.68**	**13.635**
Sway	**No**	**No**

Le-Bending Top	**2.67 ft**
Le-Bending Bot	**2.67 ft**

Beam: ***r connect VI***

Shape: **plate2**
Material: **A36 Gr.36**
Length: **2.084 ft**
I Joint: **XVI**
J Joint: **MVI**
LC 1: Total
Code Check: **0.413 (bending)**
Report Based On 97 Sections

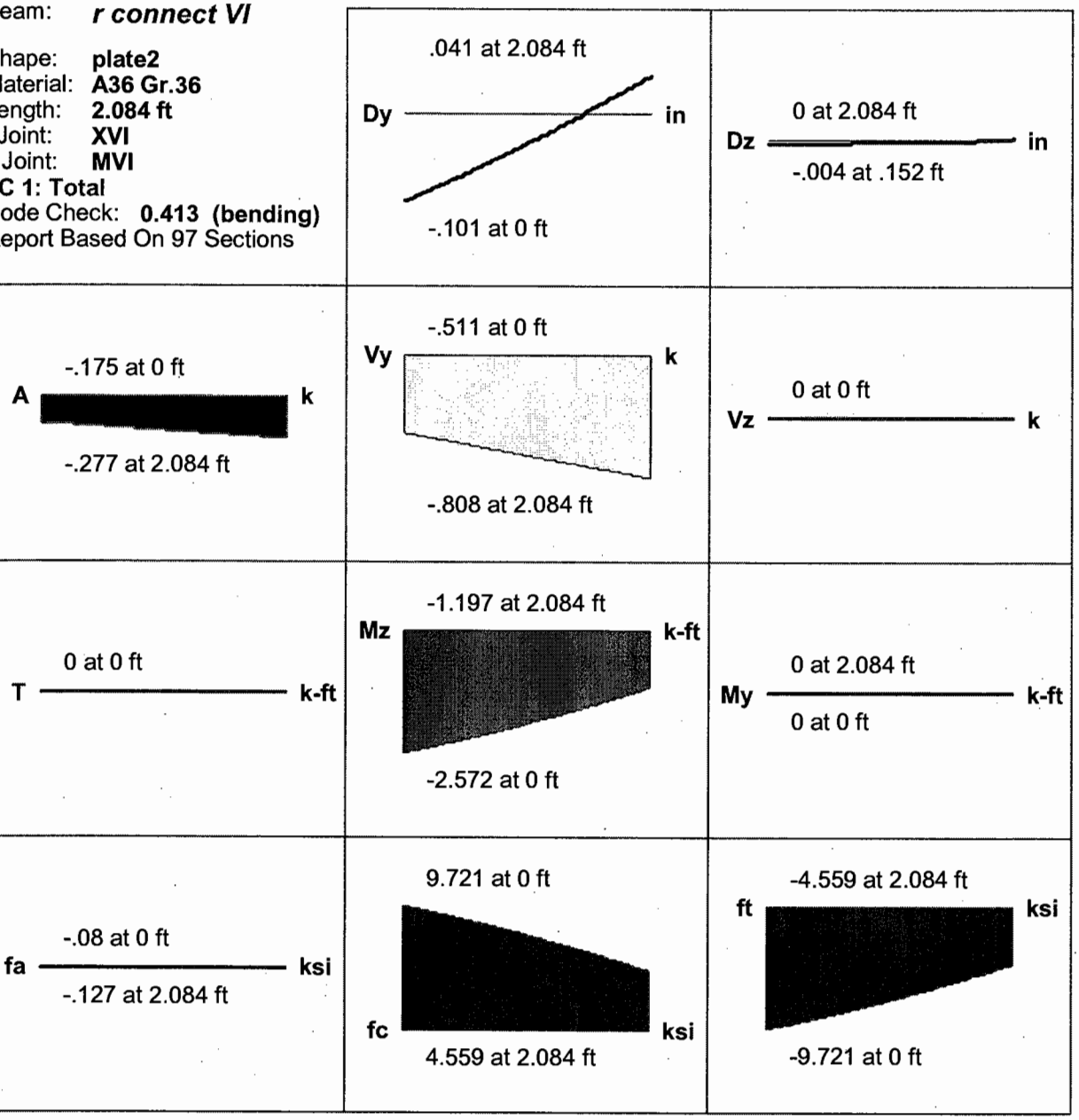

AISC ASD 9th Ed. Code Check

Max Bending Check	**0.413**	Max Shear Check	**0.039 (y)**
Location	**0 ft**	Location	**2.084 ft**
Equation	**H2-1**	Max Defl Ratio	**L/5517**

Compact

			Y-Y	Z-Z
Fy	**36 ksi**	Cm	**.6**	**.85**
Fa	**1.243 ksi**	Lb	**2.084 ft**	**2.084 ft**
Ft	**21.6 ksi**	KL/r	**346.564**	**9.902**
Fby	**27 ksi**	Sway	**No**	**No**
Fbz	**23.76 ksi**			
Fvy	**14.4 ksi**	L Comp Flange	**2.084 ft**	
Fvz	**14.4 ksi**	Torque Length	**NC**	
Cb	**1.326**			

Beam: ***pipe***

Shape: **PIPE_3.5**
Material: **A36 Gr.36**
Length: **10 ft**
I Joint: **P1**
J Joint: **P2**
LC 1: Total
Code Check: **0.236 (bending)**
Report Based On 97 Sections

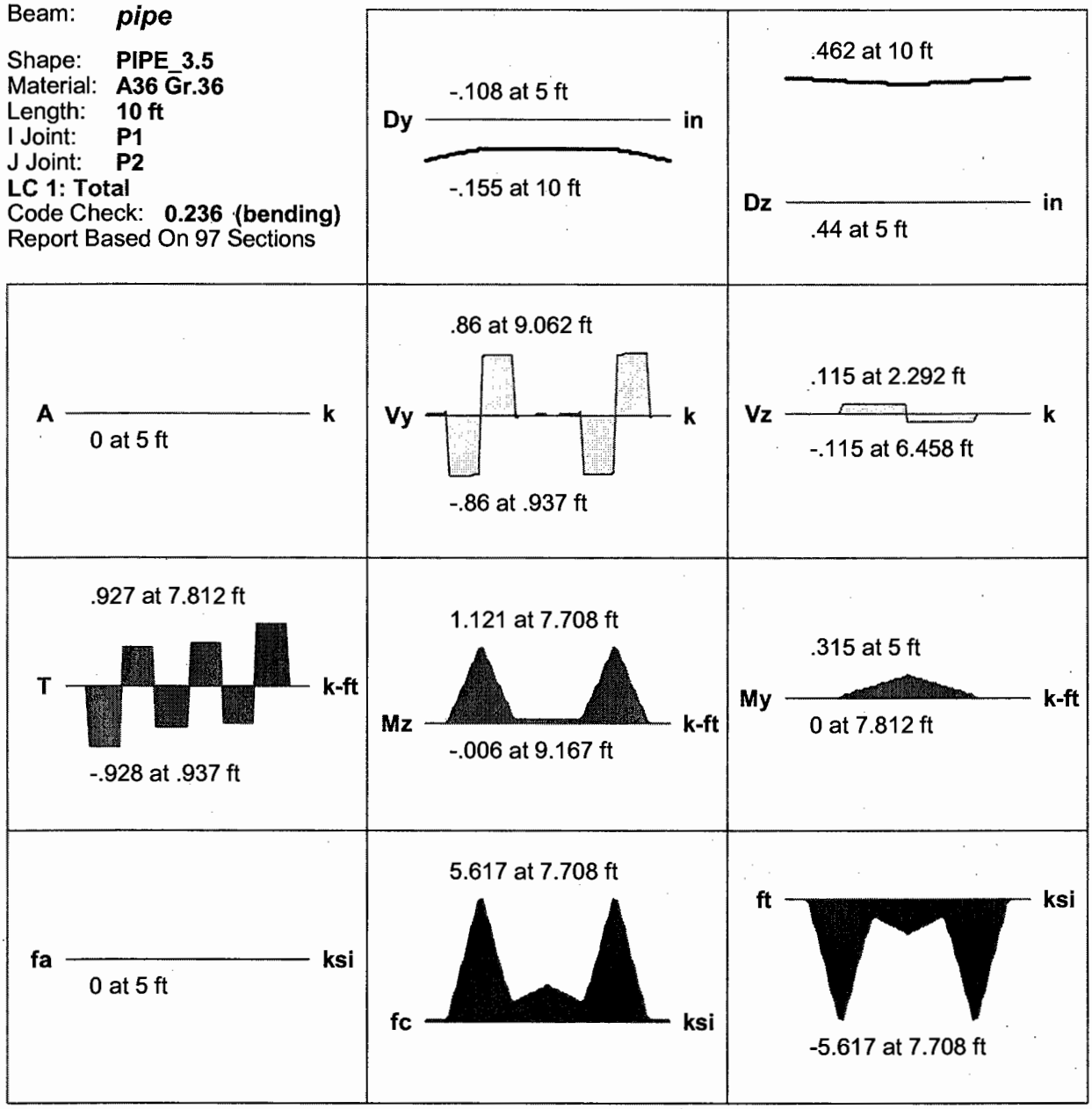

AISC ASD 9th Ed. Code Check

Max Bending Check	**0.236**	Max Shear Check	**0.206 (s)**
Location	**7.708 ft**	Location	**9.063 ft**
Equation	**H2-1**	Max Defl Ratio	**L/2556**

Compact

			Y-Y	Z-Z
Fy	**36 ksi**			
Fa	**14.232 ksi**	Cm	**.6**	**.85**
Ft	**21.6 ksi**	Lb	**2.75 ft**	**10 ft**
Fby	**23.76 ksi**	KL/r	**24.688**	**89.773**
Fbz	**23.76 ksi**	Sway	**No**	**No**
Fvy	**14.4 ksi**			
Fvz	**14.4 ksi**	L Comp Flange	**2.75 ft**	
Cb	**1**	Torque Length	**NC**	

Beam: ***M15***

Shape: **plate**
Material: **A36 Gr.36**
Length: **.839 ft**
I Joint: **N23**
J Joint: **MIII**
LC 1: Total
Code Check: **0.480 (bending)**
Report Based On 97 Sections

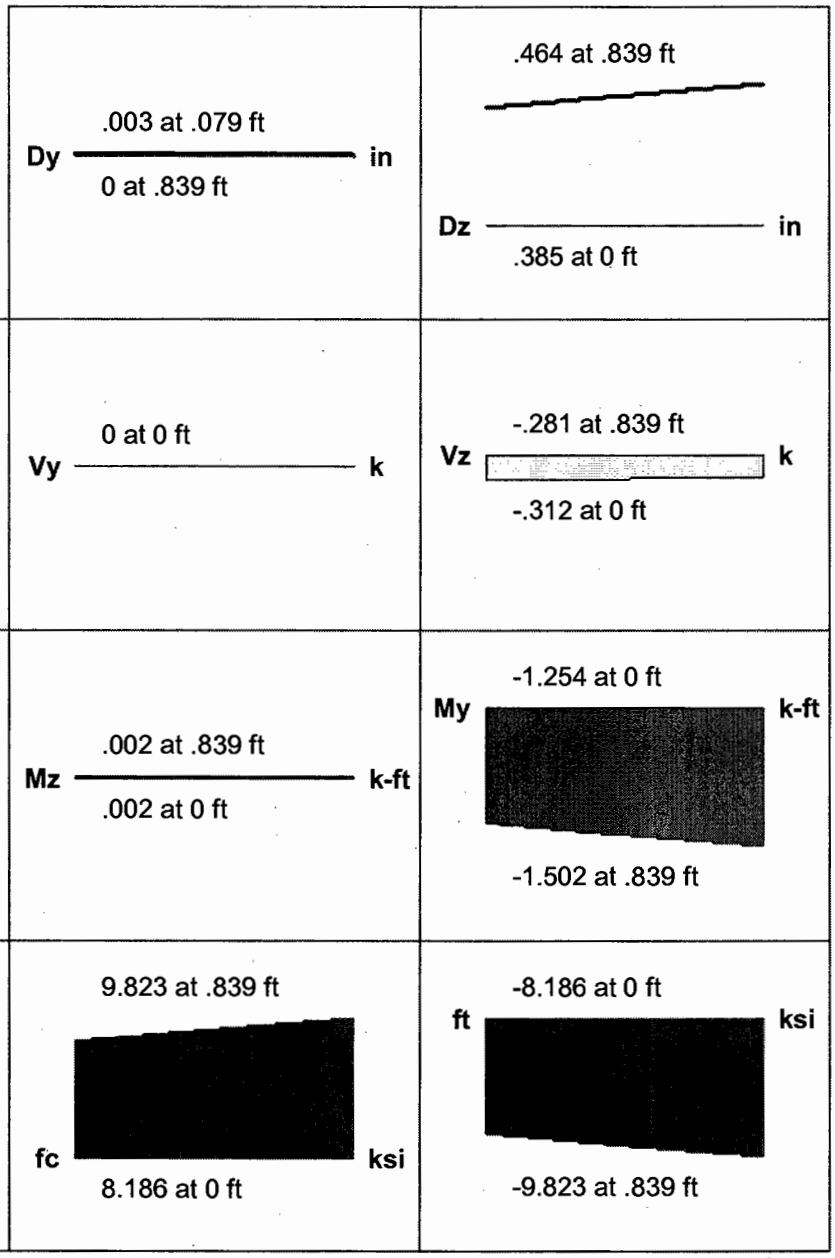

AISC ASD 9th Ed. Code Check

Max Bending Check	**0.480**	Max Shear Check	**0.031 (z)**
Location	**.839 ft**	Location	**0 ft**
Equation	**H1-1**	Max Defl Ratio	**L/8906**

Compact

			Y-Y	Z-Z
Fy	**36 ksi**			
Fa	**7.667 ksi**	Cm	**.85**	**.92**
Ft	**21.6 ksi**	Lb	**4.5 ft**	**.839 ft**
Fby	**23.76 ksi**	KL/r	**27.713**	**139.56**
Fbz	**27 ksi**	Sway	**No**	**No**
Fvy	**14.4 ksi**			
Fvz	**14.4 ksi**	L Comp Flange	**4.5 ft**	
Cb	**1.083**	Torque Length	**NC**	

Beam: ***rafter III***

Shape: **2-2X8**
Material: **DF Larch**
Length: **3.357 ft**
I Joint: **RIII**
J Joint: **N23**
LC 1: Total
Code Check: **0.486 (bending)**
Report Based On 97 Sections

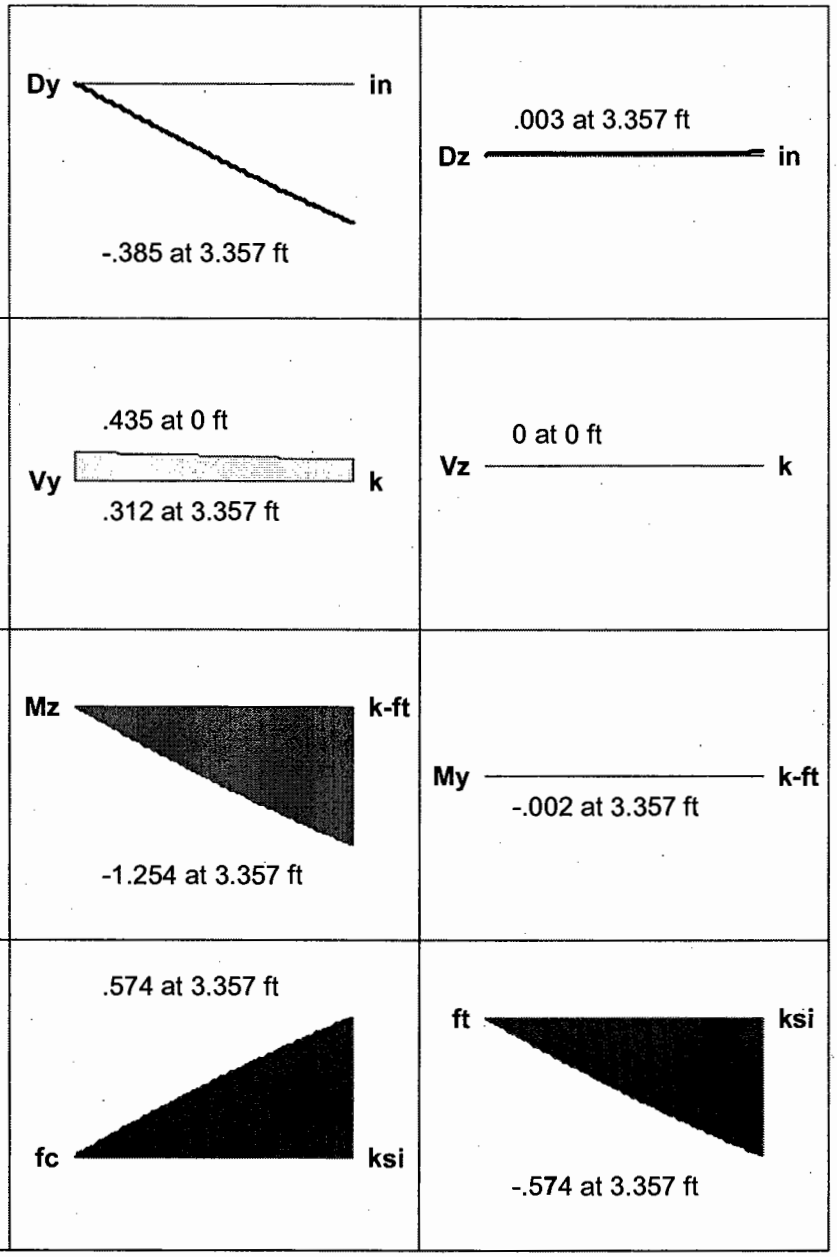

NDS 1991/97 Code Check

Max Bending Check	**0.486**	Max Shear Check	**0.330 (y)**
Location	**3.357 ft**	Location	**0 ft**
Equation	**3.9-3**	Max Defl Ratio	**L/3910**

CD	**1**	RB	**6.595**	CH	**1**	CL	**1**
Cr	**1**	Cfu	**1.15**	Cf	**1**	CP	**.691**

	(ksi)	Cm	Ct	CF
Fc'	**1.088**	**1**	**1**	**1.05**
Ft'	**.81**	**1**	**1**	**1.2**
Fb1'	**1.2**	**1**	**1**	**1.2**
Fb2'	**1.38**	**1**	**1**	**1.2**
Fv'	**.095**	**1**	**1**	
E'	**1700**	**1**	**1**	

	Y-Y	Z-Z
Lb	**4.5 ft**	**3.357 ft**
le/d	**18**	**5.557**
Sway	**No**	**No**

Le-Bending Top	**4.5 ft**
Le-Bending Bot	**4.5 ft**

Global

Display Sections for Member Calcs	5
Max Internal Sections for Member Calcs	97
Include Shear Deformation	Yes
Include Warping	Yes
Area Load Mesh (in^2)	144
Merge Tolerance (in)	.12
P-Delta Analysis Tolerance	0.50%
Vertical Axis	Y

Hot Rolled Steel Code	AISC: ASD 9th
Cold Formed Steel Code	AISI 99: ASD
Wood Code	NDS 2001: ASD
Wood Temperature	< 100F
Concrete Code	ACI 2002

Number of Shear Regions	4
Region Spacing Increment (in)	4
Biaxial Column Method	PCA Load Contour
Parme Beta Factor (PCA)	.65
Concrete Stress Block	Rectangular
Use Cracked Sections	Yes
Bad Framing Warnings	No
Unused Force Warnings	Yes

Joint Boundary Conditions

	Joint Label	X [k/in]	Y [k/in]	Z [k/in]	X Rot.[k-ft/rad]	Y Rot.[k-ft/rad]	Z Rot.[k-ft/rad]	Footing
1	XIV							
2	XV							
3	XVI							
4	XVII							
5	RI	Reaction	Reaction	Reaction	Fixed	Fixed		
6	RII	Reaction	Reaction	Reaction	Fixed	Fixed		
7	RIII	Reaction	Reaction	Reaction	Fixed	Fixed		
8	RIV		Reaction	Reaction	Fixed	Fixed		
9	RV		Reaction	Reaction	Fixed	Fixed		
10	RVI		Reaction	Reaction	Fixed	Fixed		
11	RVII		Reaction	Reaction	Fixed	Fixed		

Member Primary Data

	Label	I Joint	J Joint	K Joint	Rotate(deg)	Section/Shape	Type	Design L...	Material	Design Rules
1	pipe	P1	P2			PIPE 3.5	Beam	Pipe	A36 Gr.36	Typical
2	rafter I	RI	N21			2-2X8	Beam	Rectang...	DF Larch	Typical
3	rafter II	RII	N22			2-2X8	Beam	Rectang...	DF Larch	Typical
4	rafter III	RIII	N23			2-2X8	Beam	Rectang...	DF Larch	Typical
5	rafter IV	RIV	XIV			2-2X10	Beam	Rectang...	DF Larch	Typical
6	rafter V	RV	XV			2-2X10	Beam	Rectang...	DF Larch	Typical
7	rafter VI	RVI	XVI			2-2X10	Beam	Rectang...	DF Larch	Typical
8	rafter VII	RVII	XVII			2-2X10	Beam	Rectang...	DF Larch	Typical
9	r connect IV	XIV	MIV			plate2	Beam	Channel	A36 Gr.36	Typical
10	r connect V	XV	MV			plate2	Beam	Channel	A36 Gr.36	Typical
11	r connect VI	XVI	MVI			plate2	Beam	Channel	A36 Gr.36	Typical
12	r connect VII	XVII	MVII			plate2	Beam	Channel	A36 Gr.36	Typical
13	M13	N21	MI		90	plate	Beam	None	A36 Gr.36	Typical
14	M14	N22	MII		90	plate	Beam	None	A36 Gr.36	Typical
15	M15	N23	MIII		90	plate	Beam	None	A36 Gr.36	Typical

Basic Load Cases

	BLC Description	Category	X Gravity	Y Gravity	Z Gravity	Joint	Point	Distributed	Area (Me...	Surface (...
1	Dead Load	DL		1				14		
2	Live Load	LL		1				14		

Load Combinations

	Description	Solve	PDelta	SRSS	BLC	Factor	BLC	Factor	BLC	Factor	BLC	Factor	BLC	Factor	BLC	Factor	BLC	Factor	BLC	Factor
1	Total	Yes			1	1	2	1												

Member Section Forces

	LC	Member Label	Sec	Axial[k]	y Shear[k]	z Shear[k]	Torque[k-ft]	y-y Mome...	z-z Moment[k-ft]
1	1	pipe	1	0	0	0	0	0	0
2			2	0	.817	.115	.575	.027	.951
3			3	0	-.009	-.115	-.622	.315	.024
4			4	0	-.818	-.115	-.575	.027	.951
5			5	0	0	0	0	0	0
6	1	rafter I	1	2.257	.435	0	-.002	0	0
7			2	2.131	.404	0	-.002	0	-.352
8			3	2.005	.373	0	-.002	0	-.679
9			4	1.88	.342	0	-.002	.001	-.979
10			5	1.754	.312	0	-.002	.002	-1.254
11	1	rafter II	1	.556	.374	0	0	0	0
12			2	.43	.343	0	0	0	-.301
13			3	.305	.312	0	0	0	-.576
14			4	.179	.281	0	0	0	-.825
15			5	.053	.25	0	0	0	-1.048
16	1	rafter III	1	2.257	.435	0	.002	0	0
17			2	2.131	.404	0	.002	0	-.352
18			3	2.006	.373	0	.002	0	-.679
19			4	1.88	.343	0	.002	-.001	-.979
20			5	1.754	.312	0	.002	-.002	-1.254
21	1	rafter IV	1	.335	.979	0	.002	0	0
22			2	.206	.601	0	.002	0	-2.076
23			3	.076	.223	0	.002	0	-3.159
24			4	-.053	-.155	0	.002	0	-3.25
25			5	-.182	-.533	0	.002	-.001	-2.347
26	1	rafter V	1	.342	1.001	0	0	0	0
27			2	.213	.623	0	0	0	-2.132
28			3	.084	.245	0	0	0	-3.272
29			4	-.046	-.133	0	0	0	-3.418
30			5	-.175	-.511	0	0	0	-2.572
31	1	rafter VI	1	.342	1.001	0	0	0	0
32			2	.213	.623	0	0	0	-2.133
33			3	.084	.245	0	0	0	-3.272
34			4	-.046	-.133	0	0	0	-3.418
35			5	-.175	-.511	0	0	0	-2.572
36	1	rafter VII	1	.335	.979	0	-.002	0	0
37			2	.206	.601	0	-.002	0	-2.076
38			3	.076	.223	0	-.002	0	-3.159
39			4	-.053	-.155	0	-.002	0	-3.25
40			5	-.182	-.533	0	-.002	.001	-2.347
41	1	r connect IV	1	-.182	-.533	0	.002	-.001	-2.347
42			2	-.207	-.607	0	.002	-.001	-2.05
43			3	-.232	-.681	0	.002	-.001	-1.714
44			4	-.258	-.755	0	.002	-.001	-1.34
45			5	-.283	-.83	0	.002	-.001	-.928

Member Section Forces (Continued)

	LC	Member Label	Sec	Axial[k]	y Shear[k]	z Shear[k]	Torque[k-ft]	y-y Mome...	z-z Moment[k-ft]
46	1	r connect V	1	-.175	-.511	0	0	0	-2.572
47			2	-.201	-.585	0	0	0	-2.286
48			3	-.226	-.66	0	0	0	-1.962
49			4	-.251	-.734	0	0	0	-1.599
50			5	-.277	-.808	0	0	0	-1.197
51	1	r connect VI	1	-.175	-.511	0	0	0	-2.572
52			2	-.201	-.585	0	0	0	-2.286
53			3	-.226	-.66	0	0	0	-1.962
54			4	-.251	-.734	0	0	0	-1.599
55			5	-.277	-.808	0	0	0	-1.197
56	1	r connect VII	1	-.182	-.532	0	-.002	.001	-2.347
57			2	-.208	-.607	0	-.002	.001	-2.05
58			3	-.233	-.681	0	-.002	.001	-1.714
59			4	-.259	-.755	0	-.002	.001	-1.34
60			5	-.284	-.829	0	-.002	.001	-.927
61	1	M13	1	1.754	0	-.312	-.002	-1.254	-.002
62			2	1.722	0	-.304	-.002	-1.318	-.002
63			3	1.691	0	-.296	-.002	-1.381	-.002
64			4	1.66	0	-.289	-.002	-1.442	-.002
65			5	1.629	0	-.281	-.002	-1.502	-.002
66	1	M14	1	.053	0	-.25	0	-1.048	0
67			2	.021	0	-.243	0	-1.099	0
68			3	-.01	0	-.235	0	-1.149	0
69			4	-.041	0	-.227	0	-1.198	0
70			5	-.072	0	-.22	0	-1.245	0
71	1	M15	1	1.754	0	-.312	.002	-1.254	.002
72			2	1.723	0	-.304	.002	-1.318	.002
73			3	1.691	0	-.296	.002	-1.381	.002
74			4	1.66	0	-.289	.002	-1.443	.002
75			5	1.629	0	-.281	.002	-1.502	.002

Member Section Deflections

	LC	Member Label	Sec	x [in]	y [in]	z [in]	x Rotate[rad]	(n) L/y Ratio	(n) L/z Ratio
1	1	pipe	1	0	-.155	.462	5.613e-3	NC	NC
2			2	0	-.111	.449	7.139e-3	2711.625	8975.479
3			3	0	-.108	.44	7.421e-3	2556.396	5436.249
4			4	0	-.111	.449	7.139e-3	2712.114	8998.26
5			5	0	-.155	.462	5.613e-3	NC	NC
6	1	rafter I	1	0	0	0	0	NC	NC
7			2	0	-.103	0	7.42e-6	6343.132	NC
8			3	-.001	-.203	-.002	1.484e-5	4000.25	NC
9			4	-.002	-.298	-.002	2.226e-5	4627.129	NC
10			5	-.002	-.385	-.003	2.968e-5	NC	NC
11	1	rafter II	1	0	0	0	0	NC	NC
12			2	0	-.099	0	0	7482.822	NC
13			3	0	-.196	0	0	4726.653	NC
14			4	0	-.288	0	0	5479.428	NC
15			5	0	-.374	0	0	NC	NC
16	1	rafter III	1	0	0	0	0	NC	NC
17			2	0	-.103	0	-7.434e-6	6342.431	NC
18			3	-.001	-.203	.002	-1.487e-5	3999.803	NC
19			4	-.002	-.298	.002	-2.23e-5	4626.606	NC
20			5	-.002	-.385	.003	-2.974e-5	NC	NC
21	1	rafter IV	1	-.477	.163	0	0	NC	NC
22			2	-.477	-.041	.003	-2.009e-5	929.651	NC
23			3	-.477	-.174	.006	-4.019e-5	628.632	NC

Member Section Deflections (Continued)

	LC	Member Label	Sec	x [in]	y [in]	z [in]	x Rotate[rad]	(n) L/y Ratio	(n) L/z Ratio
24			4	-.477	-.198	.008	-6.028e-5	806.031	NC
25			5	-.477	-.11	.011	-8.037e-5	NC	NC
26	1	rafter V	1	-.454	.155	0	0	NC	NC
27			2	-.454	-.049	0	1.035e-6	896.667	NC
28			3	-.454	-.182	.002	2.07e-6	604.571	NC
29			4	-.454	-.2	.003	3.105e-6	771.579	NC
30			5	-.454	-.101	.004	4.14e-6	NC	NC
31	1	rafter VI	1	-.454	.155	0	0	NC	NC
32			2	-.454	-.049	0	-1.037e-6	896.653	NC
33			3	-.454	-.182	-.002	-2.073e-6	604.561	NC
34			4	-.454	-.2	-.003	-3.11e-6	771.565	NC
35			5	-.454	-.101	-.004	-4.146e-6	NC	NC
36	1	rafter VII	1	-.477	.163	0	0	NC	NC
37			2	-.477	-.041	-.003	2.008e-5	929.635	NC
38			3	-.477	-.174	-.006	4.016e-5	628.62	NC
39			4	-.477	-.198	-.008	6.024e-5	806.014	NC
40			5	-.477	-.11	-.011	8.032e-5	NC	NC
41	1	r connect IV	1	-.477	-.11	.011	-8.033e-5	NC	NC
42			2	-.477	-.081	.011	-4.261e-4	7922.437	NC
43			3	-.477	-.05	.009	-7.718e-4	6343.55	7689.728
44			4	-.477	-.017	.005	-1.118e-3	9108.373	NC
45			5	-.477	.018	0	-1.463e-3	NC	NC
46	1	r connect V	1	-.454	-.101	.004	4.122e-6	NC	NC
47			2	-.454	-.069	.004	2.198e-5	6982.06	NC
48			3	-.454	-.034	.003	3.983e-5	5535.673	NC
49			4	-.454	.002	.002	5.768e-5	7855.624	NC
50			5	-.454	.041	0	7.553e-5	NC	NC
51	1	r connect VI	1	-.454	-.101	-.004	-4.129e-6	NC	NC
52			2	-.454	-.069	-.004	-2.201e-5	6981.711	NC
53			3	-.454	-.034	-.003	-3.989e-5	5535.376	NC
54			4	-.454	.002	-.002	-5.777e-5	7855.169	NC
55			5	-.454	.041	0	-7.565e-5	NC	NC
56	1	r connect VII	1	-.477	-.109	-.011	8.037e-5	NC	NC
57			2	-.477	-.081	-.011	4.258e-4	7918.382	NC
58			3	-.477	-.05	-.009	7.713e-4	6340.316	7664.678
59			4	-.477	-.016	-.005	1.117e-3	9103.767	NC
60			5	-.477	.018	0	1.462e-3	NC	NC
61	1	M13	1	-.002	-.003	.385	2.968e-5	NC	NC
62			2	-.002	-.003	.406	1.826e-4	NC	NC
63			3	-.002	-.003	.426	3.355e-4	9802.952	8908.772
64			4	-.002	-.002	.445	4.884e-4	NC	NC
65			5	-.003	0	.464	6.413e-4	NC	NC
66	1	M14	1	0	0	.374	0	NC	NC
67			2	0	0	.395	-1.631e-7	NC	NC
68			3	0	0	.415	-2.997e-7	NC	NC
69			4	0	0	.434	-4.363e-7	NC	NC
70			5	0	0	.453	-5.729e-7	NC	NC
71	1	M15	1	-.002	.003	.385	-2.974e-5	NC	NC
72			2	-.002	.003	.406	-1.829e-4	NC	NC
73			3	-.002	.003	.426	-3.361e-4	9803.413	8907.687
74			4	-.002	.002	.445	-4.893e-4	NC	NC
75			5	-.003	0	.464	-6.425e-4	NC	NC

Joint Reactions (By Combination)

	LC	Joint Label	X [k]	Y [k]	Z [k]	MX [k-ft]	MY [k-ft]	MZ [k-ft]
1	1	RI	.115	2.296	0	NC	NC	0
2	1	RII	-.23	.629	0	NC	NC	0
3	1	RIII	.115	2.296	0	NC	NC	0
4	1	RIV	0	1.035	0	NC	NC	0
5	1	RV	0	1.057	0	NC	NC	0
6	1	RVI	0	1.057	0	NC	NC	0
7	1	RVII	0	1.035	0	NC	NC	0
8	1	Totals:	0	9.406	0			
9	1	COG (ft):	X: 5.746	Y: 11.995	Z: -5.5			

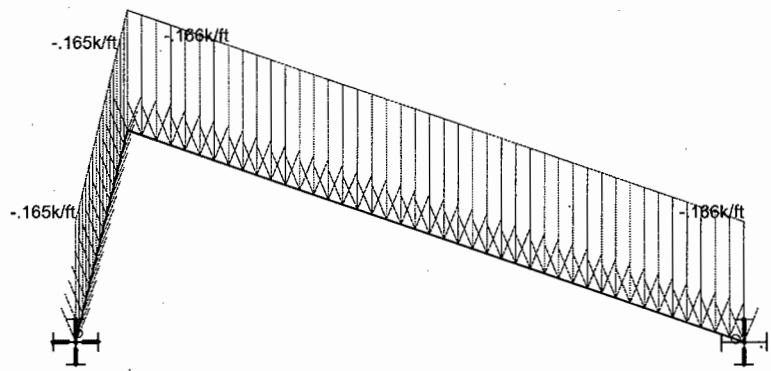

Loads: LC 1, Total

30 SNOW + DL

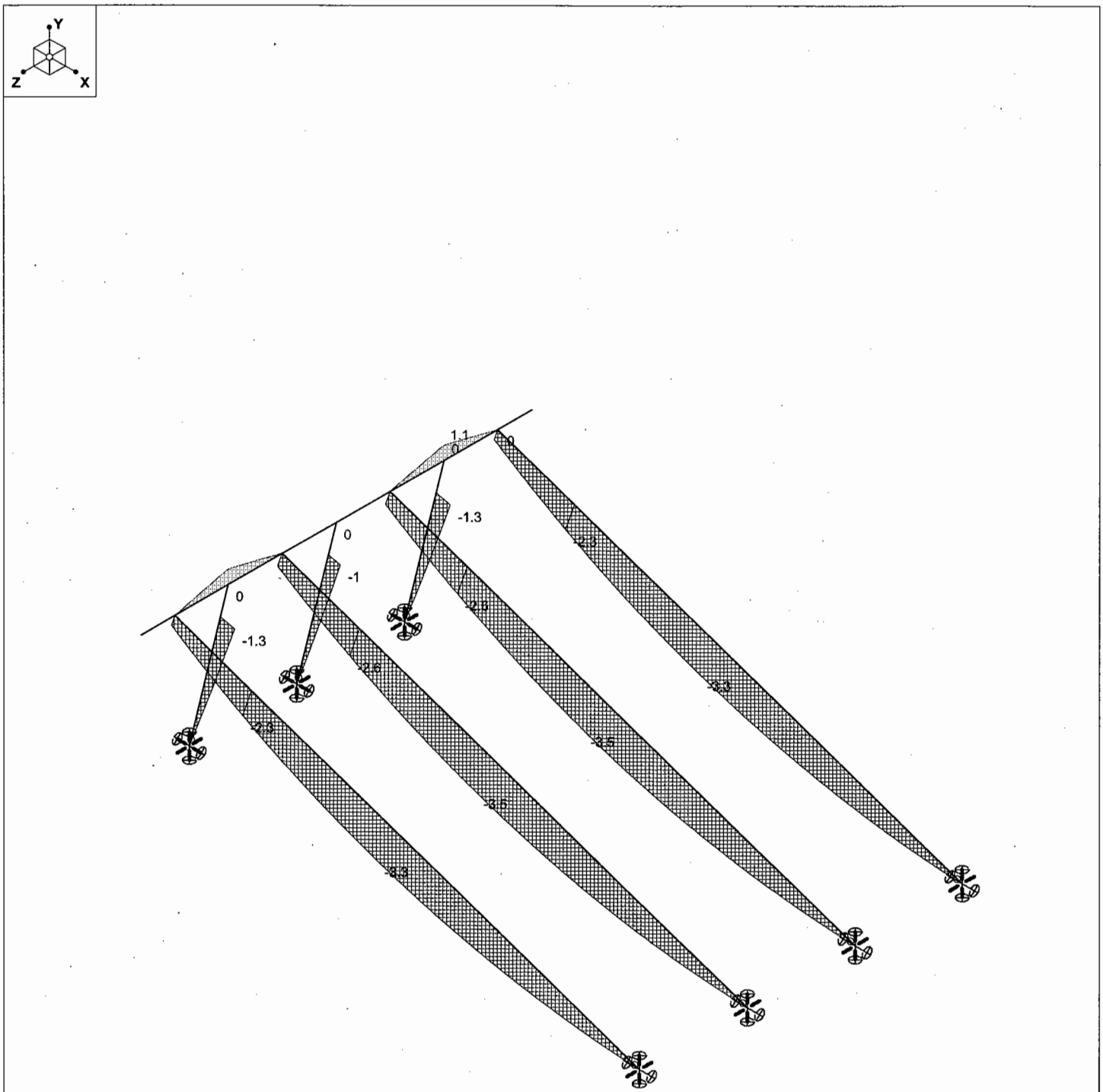

Results for LC 1, Total
Member z Bending Moments (k-ft)

Results for LC 1, Total
Member y Shear Forces (k)

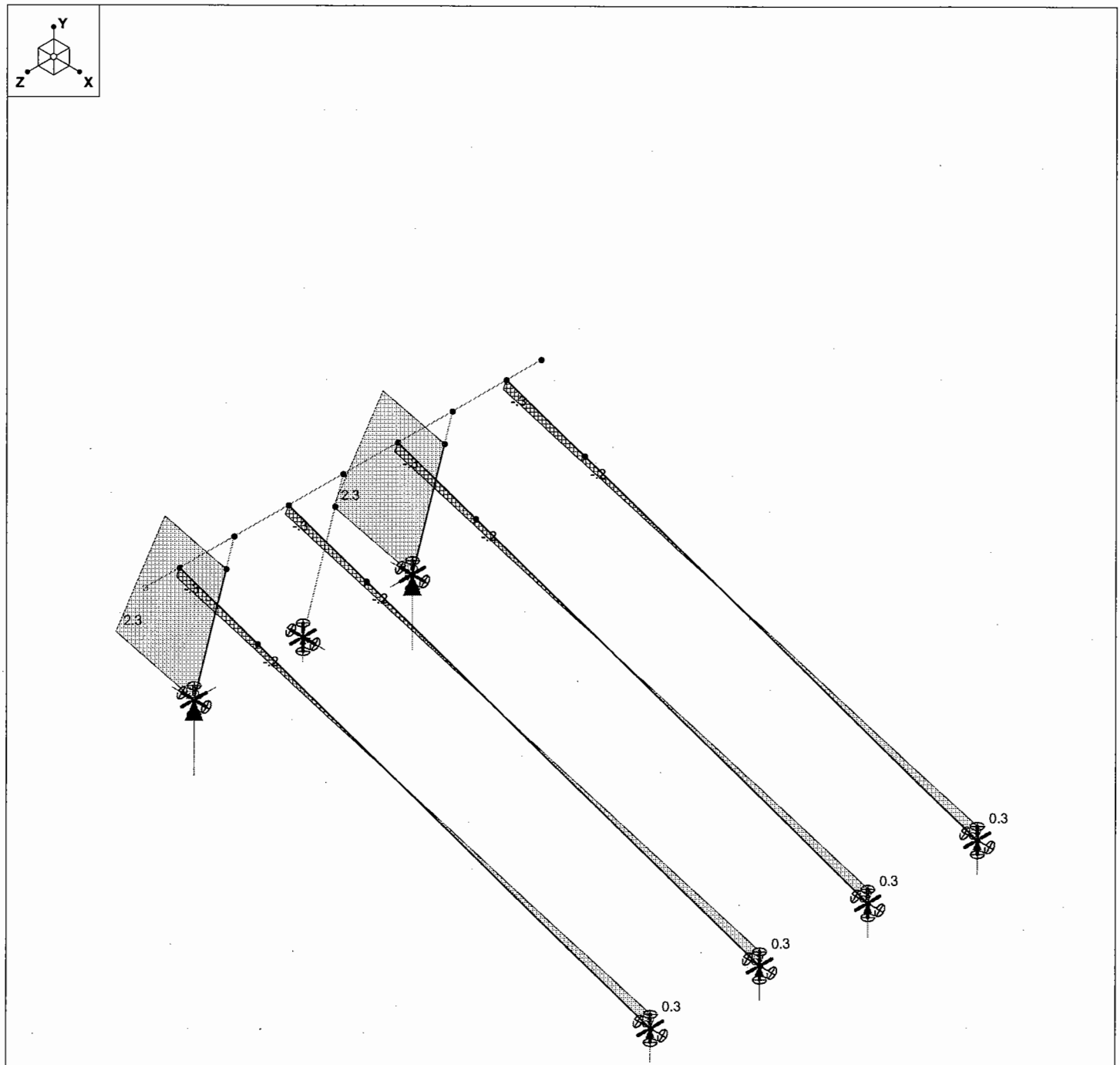

Results for LC 1, Total
Member Axial Forces (k)
Reaction units are k and k-ft

RSA	East West Truss	
Jilian Kaup		Mar 1, 2007 at 1:28 PM
W1459.2		roof REV1.r3d

ROBERT SILMAN ASSOCIATES, PLLC

STRUCTURAL ENGINEERS

1053 31ST NW, WASHINGTON DC 20007

PROJECT U MD SOLAR DECATHLON JOB NO. N/A PAGE 12/31/06

SUBJECT RIDGE CONNECTION BY COBB DATE 1/3

1" = 1'-0"

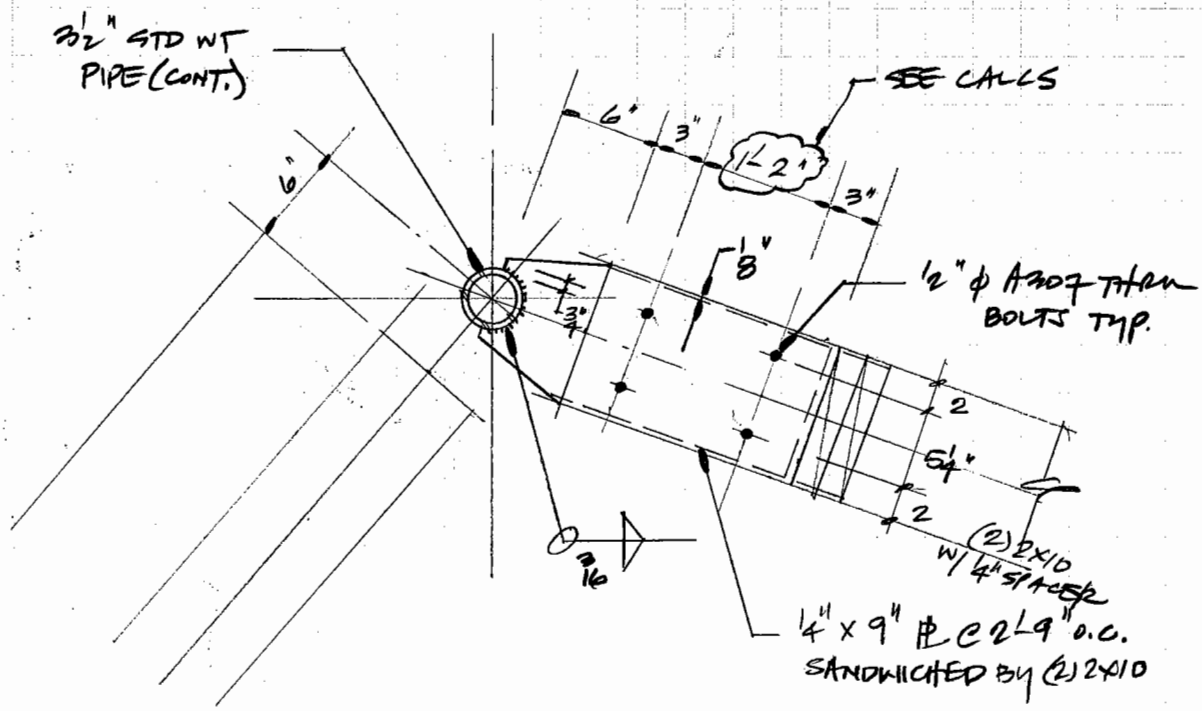

DESIGN CALCS FOR CONN:

$M_{max} = 2.3$ ft·k (@ FIXITY TO STL PL)
$V_{max} = 0.5$ k (")
$A_{max} = 0.3$ k (")

VECTOR SUM $= \sqrt{(.5)^2 + (0.3)^2} = 0.58$ k

ASSUMING ½" ϕ A307 DBL SHEAR BOLTS
¼" STL SIDE PL
$C_D = 1.15$
EDGE DIST = 2.0" (4D) FULL CAPACITY
4 BOLT CONNECTION ASSUMED

$Z_{\perp}$ TABULATED $= 920$ # (* $C_D = 1.15$) $= 1060$ #/BOLT

ROBERT SILMAN ASSOCIATES, PLLC
STRUCTURAL ENGINEERS
1053 31ST NW, WASHINGTON DC 20007

PROJECT SD 07 JOB NO. N/A PAGE 2/3

SUBJECT CONN CALCS (CONT) BY COBB DATE 12/31/06

REDUCE CAPACITY FOR MOMENT BY APPLIED SHEAR + AXIAL FORCES REPORTED ABOVE (0.58 k)

$$\therefore \Sigma_{\perp \text{ REMAINING FOR MOMENT COUPLE}} = 1060^{\#} - \frac{580^{\#}}{4_{\text{BOLTS}}} = 915^{\#}$$

$\therefore$ REQUIRED MOMENT ARM BETWEEN PAIRS, "ℓ" =

$$M = 2(915^{\#})\,\ell = 2300 \text{ ft}\#(12''/_1)$$

$$\therefore \ell = 15''$$

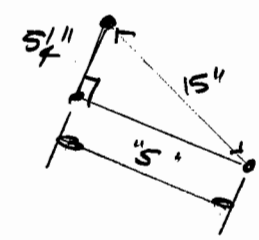

$\therefore$ SPACING "s" =

$$\sqrt{s^2 + 5\tfrac{1}{4}^2} = 15$$

$$s = \sqrt{15^2 - (5\tfrac{1}{4})^2}$$

$$s = 14.1'' \text{ SAY } 14'' \checkmark$$

ROBERT SILMAN ASSOCIATES, PLLC
STRUCTURAL ENGINEERS
1053 31ST NW, WASHINGTON DC 20007

PROJECT SD 07 JOB NO. N/A PAGE 3/3
SUBJECT CONN CALCS BY COBB DATE 12/31/06

BACK SIDE (2) 2X8 RIGID CONN:

$M_{max} = 1.254$ ft k
$V_{max} = 0.312$ k
$A_{max} = 1.75$ k
VECTOR SUM = 1.78 k

* ASSUMPTIONS SAME AS (2) 2X10 CONN SEE P.1

$Z_\perp = C_D(920) = 1060$ #

REDUCE CAPACITY FOR MOMENT BY APPLIED VECTOR SUM ABOVE $= \frac{1.78\text{ k}}{4} = 440$ #

$Z_{\perp\ REMAIN} = 1060 - 440 = 616$ #

REQ'D MOMENT ARM, "ℓ":

$$\ell = \frac{1254\text{ ft.\#}(12)}{2(616\text{ \#})} = 12.2''$$

$$\therefore\ S = \sqrt{(12.2)^2 - (5\tfrac{1}{4})^2}$$

$$\underline{S = 11''}$$

PV System Loads:

Roof Overhang:

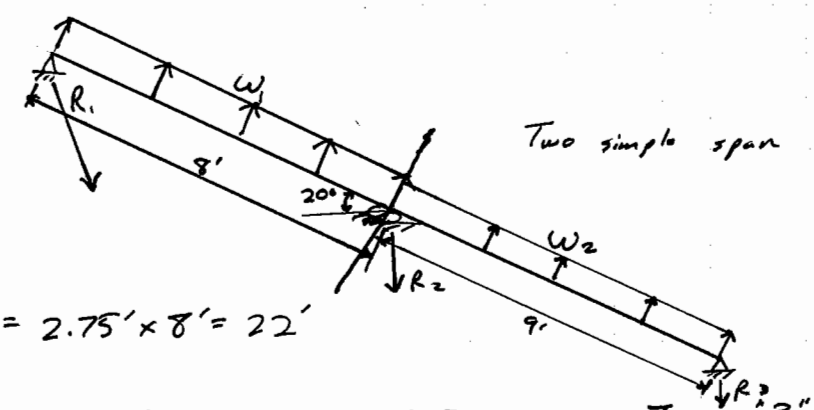

Two simple span beams

– Uplift: $A_t = 2.75' \times 8' = 22'$

From ASCE 7-02, Fig. 6-3, using Zone "3"

$p_{net30} = -34.3 \text{ psf} \times 1.21 = -41.5 \text{ psf}$
$\quad + 8.4 \text{ psf} \times 1.21 = +10.2 \text{ psf}$

Overhang $p_{net30} = -41.2 \text{ psf} \times 1.21 = -49.9 \text{ psf}$ ← governs

$w_1 = -49.9 \times 2.75 = \underline{-137.1 \text{ plf}}$

$M_{max} = \frac{137.1(8)^2}{8} = 1097 \text{ lb-ft}$

$w_2 = -41.5 \times 2.75 = \underline{114.13 \text{ plf}}$

$R_3 = (114 \times 4.5)\cos(20°) = 482^{\#} \downarrow$
or $513^{\#} \swarrow$ normal to panels

$R_2 = [(114 \times 4.5) + (137 \times 4)]\cos(20°) = 997^{\#} \downarrow$
or $1061^{\#} \swarrow$ normal to panels

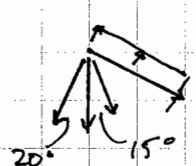

$R_3 = (50 \times 4.125 \times 4)(\cos 20°) = 775^{\#} \downarrow$
$825^{\#} \swarrow$ normal to panels
$1007^{\#} \downarrow$ rod Force $\left(\frac{1007}{\cos 45} = 1424^{\#} (T)\right)$

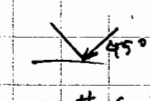

Using 80/20 Inc.'s 3030

$w = 50 psf \times 5.5' = 275 plf$

$M_{max} = \frac{275 plf (8')^2}{8} = 2200 \text{ lbs-ft} = 26400 \text{ lbs-in}$

$I_Y = 3.4133 \text{ in}^4$

$\bar{Y} = 1.5''$

$\frac{My}{I} = \frac{26400(1.5)}{3.4133} = 11601.7 psi < 35000 psi$ OK

See next page for deflections

80/20 Inc.
The Industrial Erector Set®
1701 South 400 East
Columbia City, IN 46725
260-248-8030
www.8020.net

Beam Deflection Report

Beam: 3030

Beam Properties		
Weight:	4.0131 Lb/Ft	0.555 Kg/M
Cross Sectional Area:	3.4477 Sqin	22.24 Sqcm
Moment Of Inertia (Ix):	3.4133 In^4	142.072 cm^4
Moment Of Inertia (Iy):	3.4133 In^4	142.072 cm^4
Yield Strength:	35000 Lb/Sqin	241.3 N/Sqmm
Modulus Of Elasticity:	10200000 Lb/Sqin	70326.552 N/Sqmm

Beam Length: 96 IN

Beam Load: 2200 Lbs

	X-Deflection	Y-Deflection
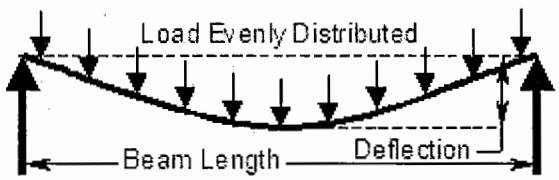	0.739 IN 18.760 mm	0.739 IN 18.760 mm
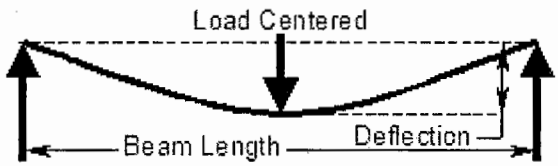	1.175 IN 29.854 mm	1.175 IN 29.854 mm
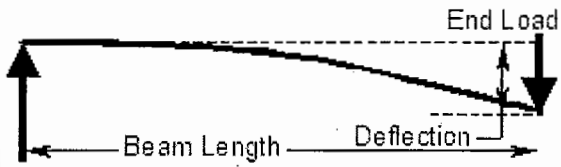	18.737 IN 475.931 mm	18.737 IN 475.931 mm

Low Roof Structure

TrusJoist A Weyerhaeuser Business

TJ-Beam® 6.25 Serial Number:
User: 2 2/28/2007 7:21:26 PM
Page 1 Engine Version: 6.25.71

LVL Roof Girder

2 Pcs of 1 3/4" x 9 1/4" 1.9E Microllam® LVL use (2) 16" LVL's for depth req.

THIS PRODUCT MEETS OR EXCEEDS THE SET DESIGN CONTROLS FOR THE APPLICATION AND LOADS LISTED

Member Slope: 0/12 Roof Slope0/12

Overall Dimension: 35' 10 1/2"

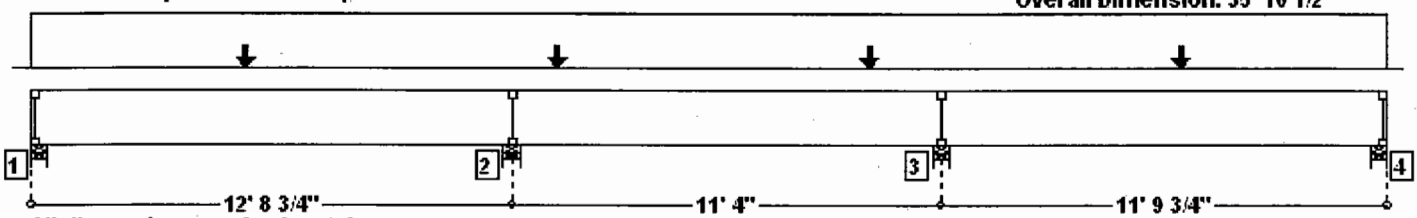

All dimensions are horizontal. **Product Diagram is Conceptual.**

LOADS:

Analysis is for a Header (Flush Beam) Member. Tributary Load Width: 9' 3"
Primary Load Group - Roof (psf): 30.0 Live at 125 % duration, 25.0 Dead
Vertical Loads:

Type	Class	Live	Dead	Location	Application	Comment
Point(lbs)	Roof(1.25)	0	167	5' 8"	-	
Point(lbs)	Roof(1.25)	0	167	13' 11"	-	
Point(lbs)	Roof(1.25)	0	167	22' 2"	-	
Point(lbs)	Roof(1.25)	0	167	30' 5"	-	

SUPPORTS:

		Input Width	Bearing Length	Vertical Reactions (lbs) Live/Dead/Uplift/Total	Detail	Other
1	Stud wall	5.25"	1.95"	1549 / 1354 / 0 / 2903	L1: Blocking	1 Ply 1 3/4" x 9 1/4" 1.9E Microllam® LVL
2	Stud wall	5.25"	4.90"	3833 / 3454 / 0 / 7287	L1: Blocking	1 Ply 1 3/4" x 9 1/4" 1.9E Microllam® LVL
3	Stud wall	5.25"	4.59"	3618 / 3217 / 0 / 6835	L1: Blocking	1 Ply 1 3/4" x 9 1/4" 1.9E Microllam® LVL
4	Stud wall	5.25"	1.83"	1455 / 1261 / 0 / 2716	L1: Blocking	1 Ply 1 3/4" x 9 1/4" 1.9E Microllam® LVL

-See TJ SPECIFIER'S / BUILDERS GUIDE for detail(s): L1: Blocking

DESIGN CONTROLS:

	Maximum	Design	Control	Control	Location
Shear (lbs)	-3946	-3434	7689	Passed (45%)	Rt. end Span 1 under Roof ADJACENT span loading
Moment (Ft-Lbs)	-8193	-8193	14005	Passed (58%)	MID Span 2 under Roof ADJACENT span loading
Live Load Defl (in)		0.231	0.414	Passed (L/644)	MID Span 1 under Roof ALTERNATE span loading
Total Load Defl (in)		0.420	0.621	Passed (L/355)	MID Span 1 under Roof ALTERNATE span loading

-Deflection Criteria: STANDARD(LL:L/360,TL:L/240).
-Bracing(Lu): All compression edges (top and bottom) must be braced at 14' o/c unless detailed otherwise. Proper attachment and positioning of lateral bracing is required to achieve member stability.
-The load conditions considered in this design analysis include alternate and adjacent member pattern loading.
-Design assumes adequate continuous lateral support of the compression edge.

PROJECT INFORMATION:

Leafhouse

OPERATOR INFORMATION:

Adam Eurich
Robert Silman Associates
1053 31st St. NW
Washinton, DC 20007
Phone : (202) 333-6230
eurich@silman.com

S:\Projects_No Job Number\UMaryland Leafhouse\47.5' lvl girder.sms

TJ-Beam® 6.25 Serial Number:
User: 2 2/28/2007 7:21:26 PM
Page 2 Engine Version: 6.25.71

LVL Roof Girder

2 Pcs of 1 3/4" x 9 1/4" 1.9E Microllam® LVL

THIS PRODUCT MEETS OR EXCEEDS THE SET DESIGN CONTROLS FOR THE APPLICATION AND LOADS LISTED

ADDITIONAL NOTES:

-IMPORTANT! The analysis presented is output from software developed by Trus Joist (TJ). TJ warrants the sizing of its products by this software will be accomplished in accordance with TJ product design criteria and code accepted design values. The specific product application, input design loads, and stated dimensions have been provided by the software user. This output has not been reviewed by a TJ Associate.
-Not all products are readily available. Check with your supplier or TJ technical representative for product availability.
-THIS ANALYSIS FOR TRUS JOIST PRODUCTS ONLY! PRODUCT SUBSTITUTION VOIDS THIS ANALYSIS.
-Allowable Stress Design methodology was used for Building Code UBC analyzing the TJ Distribution product listed above.
-Note: See TJ SPECIFIER'S / BUILDER'S GUIDES for multiple ply connection.

PROJECT INFORMATION:

Leafhouse

OPERATOR INFORMATION:

Adam Eurich
Robert Silman Associates
1053 31st St. NW
Washinton, DC 20007
Phone : (202) 333-6230
eurich@silman.com

S:\Projects_No Job Number\UMaryland Leafhouse\47.5' lvl girder.sms

TJ-Beam® 6.25 Serial Number:
User: 2 2/28/2007 7:21:26 PM
Page 3 Engine Version: 6.25.71

LVL Roof Girder

2 Pcs of 1 3/4" x 9 1/4" 1.9E Microllam® LVL

THIS PRODUCT MEETS OR EXCEEDS THE SET DESIGN CONTROLS FOR THE APPLICATION AND LOADS LISTED

Load Group: Primary Load Group

	^ 12' 5.00"		^ 11' 4.00"		^ 11' 6.00"		^
Max. Vertical Reaction Total (lbs)	2903		7287		6835		2716
Max. Vertical Reaction Live (lbs)	1549		3833		3618		1455
Required Bearing Length in	1.95(W)		4.90(W)		4.59(W)		1.83(W)
Max. Unbraced Length (in)	189	168	431	191	218		

Loading on all spans, LDF = 0.90 , 1.0 Dead

Shear at Support (lbs)	1064	-1633	1345	-1235	1506	-970
Max Shear at Support (lbs)	1279	-1870	1583	-1473	1744	-1186
Shear Within Span (lbs)	-174		1298		217	
Member Reaction (lbs)	1279	3454	3217	1186		
Support Reaction (lbs)	1354	3454	3217	1261		
Moment (Ft-Lbs)	3405	-3815	558	-3309	2926	

Loading on all spans, LDF = 1.25 , 1.0 Dead + 1.0 Floor + 1.0 Roof

Shear at Support (lbs)	2209	-3410	2694	-2482	3132	-2012
Max Shear at Support (lbs)	2673	-3922	3207	-2995	3644	-2476
Shear Within Span (lbs)	-266		2592		355	
Member Reaction (lbs)	2673	7129	6639	2476		
Support Reaction (lbs)	2835	7129	6639	2638		
Moment (Ft-Lbs)	6900	-7900	1222	-6817	5922	
Live Deflection (in)	0.199	-0.021	0.148			
Total Deflection (in)	0.388	-0.041	0.289			

ALTERNATE span loading on odd # spans, LDF = 1.25 , 1.0 Dead + 1.0 Floor + 1.0 Roof

Shear at Support (lbs)	2277	-3342	2049	-1829	3054	-2090
Max Shear at Support (lbs)	2741	-3854	2424	-2204	3566	-2554
Shear Within Span (lbs)	-198		1974		277	
Member Reaction (lbs)	2741	6278	5771	2554		
Support Reaction (lbs)	2903	6278	5771	2716		
Moment (Ft-Lbs)	7257	-7050	N/A	-5922	6300	
Live Deflection (in)	0.231	-0.071	0.177			
Total Deflection (in)	0.420	-0.078	0.318			

ALTERNATE span loading on even # spans, LDF = 1.25 , 1.0 Dead + 1.0 Floor + 1.0 Roof

Shear at Support (lbs)	1568	-2590	2665	-2512	2397	-1414
Max Shear at Support (lbs)	1907	-2965	3177	-3024	2772	-1753
Shear Within Span (lbs)	-288		2562		364	
Member Reaction (lbs)	1907	6142	5796	1753		
Support Reaction (lbs)	2023	6142	5796	1869		
Moment (Ft-Lbs)	4801	-6707	2243	-5958	4055	
Live Deflection (in)	0.068	0.066	0.046			
Total Deflection (in)	0.256	0.062	0.186			

PROJECT INFORMATION:

Leafhouse

OPERATOR INFORMATION:

Adam Eurich
Robert Silman Associates
1053 31st St. NW
Washinton, DC 20007
Phone : (202) 333-6230
eurich@silman.com

S:\Projects_No Job Number\UMaryland Leafhouse\47.5' lvl girder.sms

Trus Joist A Weyerhaeuser Business

TJ-Beam® 6.25 Serial Number:
User: 2 2/28/2007 7:21:27 PM
Page 4 Engine Version: 6.25.71

LVL Roof Girder

2 Pcs of 1 3/4" x 9 1/4" 1.9E Microllam® LVL

THIS PRODUCT MEETS OR EXCEEDS THE SET DESIGN CONTROLS FOR THE APPLICATION AND LOADS LISTED

ADJACENT span loading over support # 2, LDF = 1.25, 1.0 Dead + 1.0 Floor + 1.0 Roof

Shear at Support (lbs)		2185	-3434	2828	-2348	2365	-1446				
Max Shear at Support (lbs)		2649	-3946	3341	-2860	2740	-1785				
Shear Within Span (lbs)		-290		2726		332					
Member Reaction (lbs)	2649		7287		5600		1785				
Support Reaction (lbs)	2811		7287		5600		1901				
Moment (Ft-Lbs)		6778	-8193	1734	-5589	4205					
Live Deflection (in)		0.188		0.030		0.057					
Total Deflection (in)		0.377		-0.036		0.198					

ADJACENT span loading over support # 3, LDF = 1.25, 1.0 Dead + 1.0 Floor + 1.0 Roof

Shear at Support (lbs)		1592	-2566	2531	-2646	3164	-1980				
Max Shear at Support (lbs)		1931	-2941	3043	-3158	3676	-2444				
Shear Within Span (lbs)		-265		2428		387					
Member Reaction (lbs)	1931		5984		6835		2444				
Support Reaction (lbs)	2047		5984		6835		2606				
Moment (Ft-Lbs)		4920	-6414	1773	-7186	5770					
Live Deflection (in)		0.079		0.035		0.136					
Total Deflection (in)		0.267		0.031		0.277					

PROJECT INFORMATION:

Leafhouse

OPERATOR INFORMATION:

Adam Eurich
Robert Silman Associates
1053 31st St. NW
Washinton, DC 20007
Phone : (202) 333-6230
eurich@silman.com

S:\Projects_No Job Number\UMaryland Leafhouse\47.5' lvl girder.sms

TJ-Beam® 6.25 Serial Number:
User: 2 2/28/2007 7:26:56 PM
Page 1 Engine Version: 6.25.71

LVL Roof Girder

~~2 Pcs of 1 3/4" x 18" 1.9E Microllam® LVL~~ For Loads, not for sizing

~~MEMBER IS INSUFFICIENT DUE TO UPLIFT~~

Member Slope: 0/12 Roof Slope0/12

Overall Dimension: 35' 10 1/2"

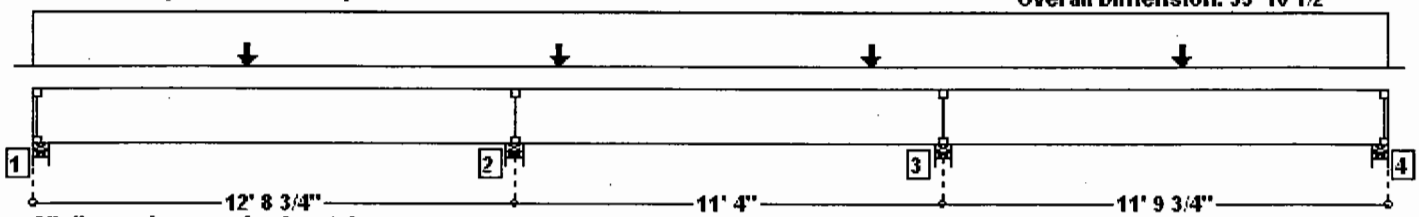

All dimensions are horizontal. **Product Diagram is Conceptual.**

LOADS:

Analysis is for a Header (Flush Beam) Member. Tributary Load Width: 9' 3"
Primary Load Group - Roof (psf): 30.0 Live at 125 % duration, 25.0 Dead
Vertical Loads:

Type	Class	Live	Dead	Location	Application	Comment
Point(lbs)	Roof(1.25)	0	167	5' 8"	-	
Point(lbs)	Roof(1.25)	0	167	13' 11"	-	
Point(lbs)	Roof(1.25)	0	167	22' 2"	-	
Point(lbs)	Roof(1.25)	0	167	30' 5"	-	

Wind Load Group - 48.4 Live, 25.0 Dead

SUPPORTS:

		Input Width	Bearing Length	Vertical Reactions (lbs) Live/Dead/Uplift/Total	Detail	Other
1	Stud wall	5.25"	1.98"	-2609 / 1399 / -1811 / 2948	L1: Blocking	1 Ply 1 1/4" x 18" 1.3E TimberStrand® LSL
2	Stud wall	5.25"	4.97"	-6438 / 3566 / -4463 / 7399	L1: Blocking	1 Ply 1 1/4" x 18" 1.3E TimberStrand® LSL
3	Stud wall	5.25"	4.66"	-6153 / 3321 / -4313 / 6939	L1: Blocking	1 Ply 1 1/4" x 18" 1.3E TimberStrand® LSL
4	Stud wall	5.25"	1.85"	-2473 / 1303 / -1730 / 2758	L1: Blocking	1 Ply 1 1/4" x 18" 1.3E TimberStrand® LSL

-See TJ SPECIFIER'S / BUILDERS GUIDE for detail(s): L1: Blocking

DESIGN CONTROLS:

	Maximum	Design	Control	Control	Location
Shear (lbs)	-4008	-3104	14963	Passed (21%)	Rt. end Span 1 under Roof (Primary Load Group) ADJACENT span loading
Moment (Ft-Lbs)	-8317	-8317	48441	Passed (17%)	MID Span 2 under Roof (Primary Load Group) ADJACENT span loading
Live Load Defl (in)		0.035	0.378	Passed (L/999+)	MID Span 2 under Wind (Wind Load Group) ALTERNATE span loading
Total Load Defl (in)		0.068	0.621	Passed (L/999+)	MID Span 1 under Roof (Primary Load Group) ALTERNATE span loading

-Deflection Criteria: STANDARD(LL:L/360,TL:L/240).
-Uplift exceeds 1000 lbs for total load.
-Uplift exceeds 1000 lbs for unbalanced load.
-Bracing(Lu): All compression edges (top and bottom) must be braced at 26' 10" o/c unless detailed otherwise. Proper attachment and positioning of lateral bracing is required to achieve member stability. [26' 10" o/c due to Primary Application Loads; 30' 6 15/16" o/c due to Wind Application Loads]
-The load conditions considered in this design analysis include alternate and adjacent member pattern loading.
-Design assumes adequate continuous lateral support of the compression edge.

PROJECT INFORMATION:

Leafhouse

OPERATOR INFORMATION:

Adam Eurich
Robert Silman Associates
1053 31st St. NW
Washinton, DC 20007
Phone : (202) 333-6230
eurich@silman.com

S:\Projects_No Job Number\UMaryland Leafhouse\47.5' lvl girder.sms

TJ-Beam® 6.25 Serial Number:
User: 2 2/28/2007 7:26:56 PM
Page 2 Engine Version: 6.25.71

LVL Roof Girder

2 Pcs of 1 3/4" x 18" 1.9E Microllam® LVL

MEMBER IS INSUFFICIENT DUE TO UPLIFT

ADDITIONAL NOTES:

-IMPORTANT! The analysis presented is output from software developed by Trus Joist (TJ). TJ warrants the sizing of its products by this software will be accomplished in accordance with TJ product design criteria and code accepted design values. The specific product application, input design loads, and stated dimensions have been provided by the software user. This output has not been reviewed by a TJ Associate.

-Not all products are readily available. Check with your supplier or TJ technical representative for product availability.

-THIS ANALYSIS FOR TRUS JOIST PRODUCTS ONLY! PRODUCT SUBSTITUTION VOIDS THIS ANALYSIS.

-Allowable Stress Design methodology was used for Building Code UBC analyzing the TJ Distribution product listed above.

-Note: See TJ SPECIFIER'S / BUILDER'S GUIDES for multiple ply connection.

PROJECT INFORMATION:

Leafhouse

OPERATOR INFORMATION:

Adam Eurich
Robert Silman Associates
1053 31st St. NW
Washinton, DC 20007
Phone : (202) 333-6230
eurich@silman.com

S:\Projects_No Job Number\UMaryland Leafhouse\47.5' lvl girder.sms

TJ-Beam® 6.25 Serial Number:
User: 2 2/28/2007 7:26:56 PM
Page 3 Engine Version: 6.25.71

LVL Roof Girder

2 Pcs of 1 3/4" x 18" 1.9E Microllam® LVL

MEMBER IS INSUFFICIENT DUE TO UPLIFT

Load Group: Primary Load Group

	^ 12' 5.00"		^ 11' 4.00"		^ 11' 6.00"	^
Max. Vertical Reaction Total (lbs)	2948		7399		6939	2758
Max. Vertical Reaction Live (lbs)	1549		3833		3618	1455
Required Bearing Length in	1.98(W)		4.97(W)		4.66(W)	1.85(W)
Max. Unbraced Length (in)	363	322	367	367	367	

Loading on all spans, LDF = 0.90 , 1.0 Dead

Shear at Support (lbs)	917	-1506	1146	-1092	1374	-821
Max Shear at Support (lbs)	1321	-1933	1633	-1519	1801	-1225
Shear Within Span (lbs)	-177		-1048		222	
Member Reaction (lbs)	1321		3566		3321	1225
Support Reaction (lbs)	1399		3566		3321	1303
Moment (Ft-Lbs)	3511	-3939	579	-3416	3017	

Loading on all spans, LDF = 1.25 , 1.0 Dead + 1.0 Floor + 1.0 Roof

Shear at Support (lbs)	1860	-3080	2293	-2137	2798	-1661
Max Shear at Support (lbs)	2715	-3985	3256	-3041	3702	-2516
Shear Within Span (lbs)	-269		-2044		359	
Member Reaction (lbs)	2715		7241		6743	2516
Support Reaction (lbs)	2880		7241		6743	2680
Moment (Ft-Lbs)	7006	-8024	1242	-6924	6014	
Live Deflection (in)	0.032		-0.005		0.024	
Total Deflection (in)	0.063		-0.009		0.048	

ALTERNATE span loading on odd # spans, LDF = 1.25 , 1.0 Dead + 1.0 Floor + 1.0 Roof

Shear at Support (lbs)	1929	-3012	1749	-1585	2720	-1738
Max Shear at Support (lbs)	2784	-3916	2474	-2251	3624	-2593
Shear Within Span (lbs)	-200		-1516		281	
Member Reaction (lbs)	2784		6390		5875	2593
Support Reaction (lbs)	2948		6390		5875	2758
Moment (Ft-Lbs)	7364	-7175	N/A	-6029	6391	
Live Deflection (in)	0.037		-0.011		0.029	
Total Deflection (in)	0.068		-0.012		0.053	

ALTERNATE span loading on even # spans, LDF = 1.25 , 1.0 Dead + 1.0 Floor + 1.0 Roof

Shear at Support (lbs)	1320	-2361	2263	-2166	2164	-1163
Max Shear at Support (lbs)	1950	-3027	3227	-3070	2830	-1792
Shear Within Span (lbs)	-291		-2073		368	
Member Reaction (lbs)	1950		6254		5900	1792
Support Reaction (lbs)	2066		6254		5900	1908
Moment (Ft-Lbs)	4907	-6831	2263	-6065	4147	
Live Deflection (in)	0.011		0.011		0.008	
Total Deflection (in)	0.043		0.012		0.032	

PROJECT INFORMATION:

Leafhouse

OPERATOR INFORMATION:

Adam Eurich
Robert Silman Associates
1053 31st St. NW
Washinton, DC 20007
Phone : (202) 333-6230
eurich@silman.com

S:\Projects_No Job Number\UMaryland Leafhouse\47.5' lvl girder.sms

TJ-Beam® 6.25 Serial Number:
User: 2 2/28/2007 7:26:56 PM
Page 4 Engine Version: 6.25.71

LVL Roof Girder

2 Pcs of 1 3/4" x 18" 1.9E Microllam® LVL

MEMBER IS INSUFFICIENT DUE TO UPLIFT

ADJACENT span loading over support # 2, LDF = 1.25, 1.0 Dead + 1.0 Floor + 1.0 Roof

Shear at Support (lbs)	1837	-3104	2427	-2002	2132	-1195
Max Shear at Support (lbs)	2692	-4008	3390	-2907	2798	-1825
Shear Within Span (lbs)	-292		-1909		336	
Member Reaction (lbs)	2692	7399		5704		1825
Support Reaction (lbs)	2856	7399		5704		1940
Moment (Ft-Lbs)	6885	-8317	1754	-5696	4296	
Live Deflection (in)	0.030		0.006		0.010	
Total Deflection (in)	0.062		0.006		0.034	

ADJACENT span loading over support # 3, LDF = 1.25, 1.0 Dead + 1.0 Floor + 1.0 Roof

Shear at Support (lbs)	1344	-2338	2129	-2300	2830	-1628
Max Shear at Support (lbs)	1974	-3004	3092	-3205	3734	-2483
Shear Within Span (lbs)	-268		-2207		391	
Member Reaction (lbs)	1974	6096		6939		2483
Support Reaction (lbs)	2089	6096		6939		2648
Moment (Ft-Lbs)	5027	-6538	1793	-7293	5861	
Live Deflection (in)	0.013		0.007		0.022	
Total Deflection (in)	0.044		0.007		0.046	

Load Group: Wind Load Group

	^ 12' 5.00"	^ 11' 4.00"	^ 11' 6.00"	^
Max. Vertical Reaction Total (lbs)	-1811	-4463	-4313	-1730
Max. Vertical Reaction Live (lbs)	-2609	-6438	-6153	-2473
Required Bearing Length in	1.98(W)	4.97(W)	4.66(W)	1.85(W)
Max. Unbraced Length (in)	367	367 367	367 367	

Loading on all spans, LDF = 1.60 , 0.6 Dead + 1.0 Wind (uplift)

Shear at Support (lbs)	-1014	1694	-1233	1124	-1532	903
Max Shear at Support (lbs)	-1499	2207	-1746	1637	-2045	1388
Shear Within Span (lbs)	99		1071		-148	
Member Reaction (lbs)	-1499	-3953		-3681		-1388
Support Reaction (lbs)	-1590	-3953		-3681		-1479
Moment (Ft-Lbs)	-3765	4394	-714	3774	-3228	
Live Deflection (in)	-0.051		0.007		-0.039	
Total Deflection (in)	-0.034		0.005		-0.026	

ALTERNATE span loading on odd # spans, LDF = 1.60 , 0.6 Dead + 1.0 Wind (uplift)

Shear at Support (lbs)	-1235	1473	521	-657	-1280	1154
Max Shear at Support (lbs)	-1720	1986	778	-913	-1793	1639
Shear Within Span (lbs)	-122		-630		103	
Member Reaction (lbs)	-1720	-1209		-880		-1639
Support Reaction (lbs)	-1811	-1209		-880		-1730
Moment (Ft-Lbs)	-4956	1653	3680	886	-4502	
Live Deflection (in)	-0.067		0.035		-0.054	
Total Deflection (in)	-0.050		0.035		-0.041	

PROJECT INFORMATION:

Leafhouse

OPERATOR INFORMATION:

Adam Eurich
Robert Silman Associates
1053 31st St. NW
Washinton, DC 20007
Phone : (202) 333-6230
eurich@silman.com

S:\Projects_No Job Number\UMaryland Leafhouse\47.5' lvl girder.sms

TJ-Beam® 6.25 Serial Number:
User: 2 2/28/2007 7:26:57 PM
Page 5 Engine Version: 6.25.71

LVL Roof Girder

2 Pcs of 1 3/4" x 18" 1.9E Microllam® LVL

MEMBER IS INSUFFICIENT DUE TO UPLIFT

ALTERNATE span loading on even # spans, LDF = 1.60 , 0.6 Dead + 1.0 Wind (uplift)

Shear at Support (lbs)	728	-626	-1138	1219	514	-702
Max Shear at Support (lbs)	970	-882	-1651	1732	771	-945
Shear Within Span (lbs)	171	1166	-177			
Member Reaction (lbs)	970	-769	-961	945		
Support Reaction (lbs)	1013	-769	-961	988		
Moment (Ft-Lbs)	3154	545	-4022	1001	2992	
Live Deflection (in)	0.018	-0.036	0.016			
Total Deflection (in)	0.034	-0.035	0.028			

ADJACENT span loading over support # 2, LDF = 1.60, 0.6 Dead + 1.0 Wind (uplift)

Shear at Support (lbs)	-938	1770	-1666	691	618	-599
Max Shear at Support (lbs)	-1423	2283	-2179	1204	874	-841
Shear Within Span (lbs)	175	638	-74			
Member Reaction (lbs)	-1423	-4463	-330	841		
Support Reaction (lbs)	-1514	-4463	-330	885		
Moment (Ft-Lbs)	-3393	5340	-2616	-188	2373	
Live Deflection (in)	-0.046	-0.018	0.010			
Total Deflection (in)	-0.029	-0.018	0.022			

ADJACENT span loading over support # 3, LDF = 1.60, 0.6 Dead + 1.0 Wind (uplift)

Shear at Support (lbs)	652	-702	-705	1652	-1635	800
Max Shear at Support (lbs)	894	-958	-1218	2165	-2148	1285
Shear Within Span (lbs)	95	1599	-251			
Member Reaction (lbs)	894	-260	-4313	-1285		
Support Reaction (lbs)	937	-260	-4313	-1376		
Moment (Ft-Lbs)	2678	-400	-2886	4964	-2765	
Live Deflection (in)	0.011	-0.021	-0.033			
Total Deflection (in)	0.028	-0.021	-0.020			

PROJECT INFORMATION:

Leafhouse

OPERATOR INFORMATION:

Adam Eurich
Robert Silman Associates
1053 31st St. NW
Washinton, DC 20007
Phone : (202) 333-6230
eurich@silman.com

S:\Projects_No Job Number\UMaryland Leafhouse\47.5' lvl girder.sms

LVL Girders (Worst Case)

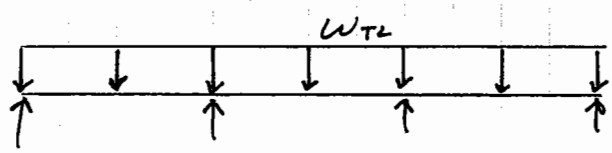

$w_{TL} = w_D + w_S$

$w_S = 9.25 \times 30 = 277.5$ plf

$w_D = (1.75 \times 20) + (6.5 \times 30) + (5 \times 4) = 250$ plf

$w_{TL} = \underline{527.5}$ plf

<u>Post</u> (Worst Case)

$TL = 527.5 \times 11.5 = \underline{6066\#}$ Comperable to TJ-Beam Max Load of 7399# (TJ-Beam utilizes safety factor)

LVL Girder to Post (Uplift using MWFRS Loads)

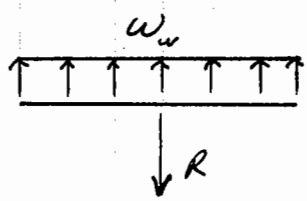

Elev.

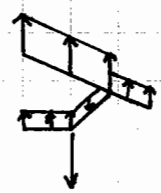

Sect.

- Uplift:

$$w_w = (6.0 \times (21.6 \times 1.21)) + (3.0 \times (10.7 \times 1.21)) + (1.5 \times (15.4 \times 1.21)) + (2 \times (-1.1 \times 1.21)) = 240 \text{ plf}$$

$$w_D = (1.5 \times .6 \times 15) + (6.5 \times .6 \times 25) = 111 \text{ plf}$$

$$w_{TL} = 130 \text{ plf}$$

$$R = 130\,(11.5') = \underline{1495^{\#}}$$

- With C+C Loads, TJ-Beam gives max load of $\underline{4463^{\#}}$ ← governs

∴ Use Simpson Connector CCQ465D52.5 as Cap
Uplift (133) = 5955#

Use CCQ665D52.5 inverted as base
Uplift (133) = 5955#

GRAVITY LOAD: $\left.\begin{array}{l} LL = 30\,psf \\ DL = 20\,psf \end{array}\right\} 50\,psf$

TRIB AREA = $8'/2 = 4'$ $\times$ $8.25' = 33\,sf$

$\therefore$ LOAD = 1650# @ CENTER

$M = \frac{Pl}{4} = \frac{1650 \times 3.25'}{4} \rightarrow M = 1340\ \#\text{-FT}$

$S_x > \frac{1340\ \#\text{-FT} \times 12}{0.66\,(42\,ksi)} \rightarrow S_x > 0.574\ in^3$

USE: HSS 2x2x 3/16 (4.30#/FT)

HSS 2 1/2 x 1 1/2 x 1/4 (5.38#/FT)

HSS 3 x 1 1/2 x 3/16 (4.94#/FT)

HSS 3x2x 3/16

FLOOR JOIST LOAD CASE #1

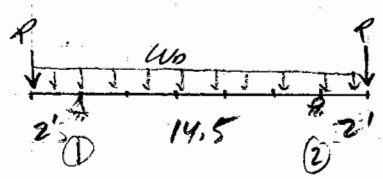

P = WALL (DEAD LOAD)

W_D = FLOOR DEAD LOAD

P = 12 psf × 9' = 108 plf × 16"/12 = 144 LBS + 6 PLF = 150 LBS.
(assume 16" o.c.; LSL)

W_D = 15 PSF × 16"/12 = 20 plf
(including SW of TJI (3 plf))

USING 50 PSF LL → USE 9½" TJI 230 @ 16" o.c.

USING 100 PSF LL → MARGINAL (107%)

FLOOR JOIST LOAD CASE #2

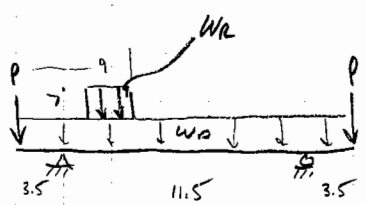

P (SEE ABOVE) = 150 LBS

W_D (SEE ABOVE) = 20 LBS/LF

W_{RANGE} = (200 LBS)/(2.5' × 2) = 40 PSF × 16/12 = 53 LB/LF

USING 50 PSF → USE 9½" TJI 230 @ 16" o.c.

FLOOR JOIST LOAD CASE #3 (SIMILAR TO #2 W/ LL = 100 PSF)

OVERSTRESSED 120%

TJ-Beam® 6.25 Serial Number:
User: 2 2/28/2007 11:32:12 PM
Page 1 Engine Version: 6.25.71

Typical Floor Joist (LL=50 psf)

9 1/2" TJI® 230 @ 16" o/c

THIS PRODUCT MEETS OR EXCEEDS THE SET DESIGN CONTROLS FOR THE APPLICATION AND LOADS LISTED

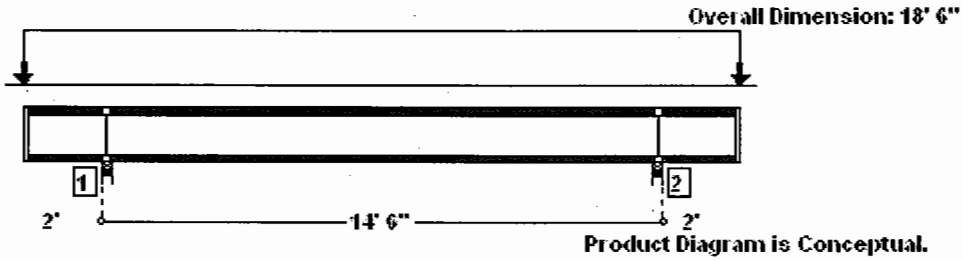

LOADS:

Analysis is for a Joist Member.
Primary Load Group - Residential - Living Areas (psf): 50.0 Live at 100 % duration, 15.0 Dead
Vertical Loads:

Type	Class	Live	Dead	Location	Application	Comment
Point(lbs)	Floor(1.00)	0	150	0	-	Ext. Wall Load
Point(lbs)	Floor(1.00)	0	150	18' 6"	-	Ext. Wall Load

SUPPORTS:

		Input Width	Bearing Length	Vertical Reactions (lbs) Live/Dead/Uplift/Total	Detail	Other
1	Stud wall	3.50"	3.50"	627 / 335 / 0 / 962	E1: Blocking	1 Ply 9 1/2" TJI® 230
2	Stud wall	3.50"	3.50"	627 / 335 / 0 / 962	E1: Blocking	1 Ply 9 1/2" TJI® 230

-See TJ SPECIFIER'S / BUILDERS GUIDE for detail(s): E1: Blocking

DESIGN CONTROLS:

	Maximum	Design	Control	Control	Location
Shear (lbs)	626	-582	1463	Passed (40%)	Rt. end Span 1 under Floor ADJACENT span loading
Vertical Reaction (lbs)	962	962	2410	Passed (40%)	Bearing 2 under Floor ADJACENT span loading
Moment (Ft-Lbs)	1819	1819	3175	Passed (57%)	MID Span 1 under Floor ALTERNATE span loading
Live Load Defl (in)		0.305	0.355	Passed (L/558)	MID Span 1 under Floor ALTERNATE span loading
Total Load Defl (in)		0.318	0.710	Passed (L/535)	MID Span 1 under Floor ALTERNATE span loading
TJPro		38	30	Passed	Span 1

-Deflection Criteria: STANDARD(LL:L/480,TL:L/240). Additional checks follow.
-Left Overhang:(LL:0.200", TL:2L/240).
-Right Overhang:(LL:0.200", TL:2L/240).
-Deflection analysis is based on composite action with single layer of 19/32" Panels (20" Span Rating) GLUED & NAILED wood decking.
-Bracing(Lu): All compression edges (top and bottom) must be braced at 4' 7" o/c unless detailed otherwise. Proper attachment and positioning of lateral bracing is required to achieve member stability.
-The load conditions considered in this design analysis include alternate and adjacent member pattern loading.

PROJECT INFORMATION:

UM Solar Decathalon

OPERATOR INFORMATION:

John Dumsick
Robert Silman Associates
1053 31st Street NW
Washington, DC 20007
Phone : (202) 333-6230
dumsick@dc.rsapc.com

S:\Projects_No Job Number\UMaryland Leafhouse\Typ. Floor Joist TJI 230 (LL=50 psf).sms

TJ-Beam® 6.25 Serial Number:
User: 2 2/28/2007 11:32:12 PM
Page 2 Engine Version: 6.25.71

Typical Floor Joist (LL=50 psf)

9 1/2" TJI® 230 @ 16" o/c

THIS PRODUCT MEETS OR EXCEEDS THE SET DESIGN CONTROLS FOR THE APPLICATION AND LOADS LISTED

ADDITIONAL NOTES:

-IMPORTANT! The analysis presented is output from software developed by Trus Joist (TJ). TJ warrants the sizing of its products by this software will be accomplished in accordance with TJ product design criteria and code accepted design values. The specific product application, input design loads, and stated dimensions have been provided by the software user. This output has not been reviewed by a TJ Associate.
-Not all products are readily available. Check with your supplier or TJ technical representative for product availability.
-THIS ANALYSIS FOR TRUS JOIST PRODUCTS ONLY! PRODUCT SUBSTITUTION VOIDS THIS ANALYSIS.
-Allowable Stress Design methodology was used for Building Code IBC analyzing the TJ Distribution product listed above.

PROJECT INFORMATION:

UM Solar Decathalon

OPERATOR INFORMATION:

John Dumsick
Robert Silman Associates
1053 31st Street NW
Washington, DC 20007
Phone : (202) 333-6230
dumsick@dc.rsapc.com

S:\Projects_No Job Number\UMaryland Leafhouse\Typ. Floor Joist TJI 230 (LL=50 psf).sms

TJ-Beam® 6.25 Serial Number:
User: 2 2/28/2007 11:32:12 PM
Page 3 Engine Version: 6.25.71

Typical Floor Joist (LL=50 psf)

9 1/2" TJI® 230 @ 16" o/c

THIS PRODUCT MEETS OR EXCEEDS THE SET DESIGN CONTROLS FOR THE APPLICATION AND LOADS LISTED

Load Group: Primary Load Group

	2' 1.75"	^	14' 2.50"	^	2' 1.75"
Max. Vertical Reaction Total (lbs)		962		962	
Max. Vertical Reaction Live (lbs)		627		627	
Selected Bearing Length (in)		3.50(W)		3.50(W)	
Max. Unbraced Length (in)	102	102	55	102	102

Loading on all spans, LDF = 0.90 , 1.0 Dead

Shear at Support (lbs)		-190	132	-132	190
Max Shear at Support (lbs)		-193	142	-142	193
Member Reaction (lbs)		335		335	
Support Reaction (lbs)		335		335	
Moment (Ft-Lbs)	N/A	-368	137	-368	0

Loading on all spans, LDF = 1.00 , 1.0 Dead + 1.0 Floor

Shear at Support (lbs)		-323	572	-572	323
Max Shear at Support (lbs)		-336	616	-616	336
Member Reaction (lbs)		952		952	
Support Reaction (lbs)		952		952	
Moment (Ft-Lbs)	N/A	-521	1666	-521	N/A
Live Deflection (in)	-0.110		0.273		-0.110
Total Deflection (in)	-0.103		0.286		-0.103

ALTERNATE span loading on odd # spans, LDF = 1.00 , 1.0 Dead + 1.0 Floor

Shear at Support (lbs)		-323	132	-132	323
Max Shear at Support (lbs)		-336	142	-142	336
Member Reaction (lbs)		478		478	
Support Reaction (lbs)		478		478	
Moment (Ft-Lbs)	N/A	-521	-17	-521	0
Live Deflection (in)	0.019		-0.033		0.019
Total Deflection (in)	0.027		-0.020		0.027

ALTERNATE span loading on even # spans, LDF = 1.00 , 1.0 Dead + 1.0 Floor

Shear at Support (lbs)		-190	572	-572	190
Max Shear at Support (lbs)		-193	616	-616	193
Member Reaction (lbs)		809		809	
Support Reaction (lbs)		809		809	
Moment (Ft-Lbs)	N/A	-368	1819	-368	N/A
Live Deflection (in)	-0.129		0.305		-0.129
Total Deflection (in)	-0.122		0.318		-0.122

ADJACENT span loading over support # 1, LDF = 1.00, 1.0 Dead + 1.0 Floor

Shear at Support (lbs)		-323	582	-561	190
Max Shear at Support (lbs)		-336	626	-605	193
Member Reaction (lbs)		962		798	
Support Reaction (lbs)		962		798	
Moment (Ft-Lbs)	N/A	-521	1743	-368	N/A
Live Deflection (in)	-0.116		0.289		-0.123
Total Deflection (in)	-0.108		0.302		-0.116

PROJECT INFORMATION:

UM Solar Decathalon

OPERATOR INFORMATION:

John Dumsick
Robert Silman Associates
1053 31st Street NW
Washington, DC 20007
Phone : (202) 333-6230
dumsick@dc.rsapc.com

S:\Projects_No Job Number\UMaryland Leafhouse\Typ. Floor Joist TJI 230 (LL=50 psf).sms

Trus Joist A Weyerhaeuser Business

TJ-Beam® 6.25 Serial Number:
User: 2 2/28/2007 11:32:13 PM
Page 4 Engine Version: 6.25.71

Typical Floor Joist (LL=50 psf)

9 1/2" TJI® 230 @ 16" o/c

THIS PRODUCT MEETS OR EXCEEDS THE SET DESIGN CONTROLS FOR THE APPLICATION AND LOADS LISTED

ADJACENT span loading over support # 2, LDF = 1.00, 1.0 Dead + 1.0 Floor

Shear at Support (lbs)		-190 561		-582 323	
Max Shear at Support (lbs)		-193 605		-626 336	
Member Reaction (lbs)		798		962	
Support Reaction (lbs)		798		962	
Moment (Ft-Lbs)	N/A	-368	1743	-521	N/A
Live Deflection (in)	-0.123		0.289		-0.116
Total Deflection (in)	-0.116		0.302		-0.108

PROJECT INFORMATION:

UM Solar Decathalon

OPERATOR INFORMATION:

John Dumsick
Robert Silman Associates
1053 31st Street NW
Washington, DC 20007
Phone : (202) 333-6230
dumsick@dc.rsapc.com

S:\Projects_No Job Number\UMaryland Leafhouse\Typ. Floor Joist TJI 230 (LL=50 psf).sms

TJ-Beam® 6.25 Serial Number:
User: 2 2/28/2007 11:37:46 PM
Page 1 Engine Version: 6.25.71

Typ. Joist (LL=100psf)

9 1/2" TJI® 230 @ 16" o/c

MEMBER IS INSUFFICIENT DUE TO LOAD

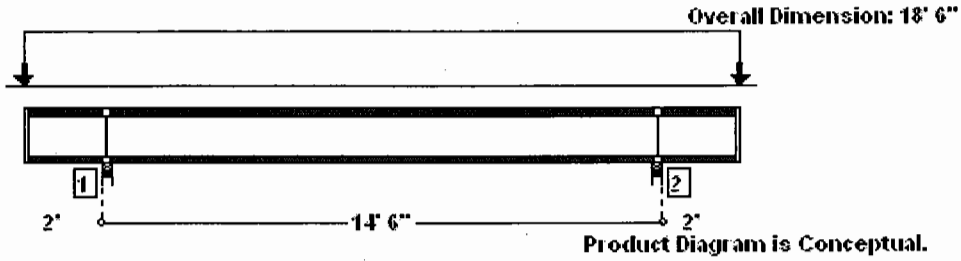

LOADS:

Analysis is for a Joist Member.
Primary Load Group - Residential - Living Areas (psf): 100.0 Live at 100 % duration, 12.0 Dead
Vertical Loads:

Type	Class	Live	Dead	Location	Application	Comment
Point(lbs)	Floor(1.00)	0	150	0	-	Ext. Wall Load
Point(lbs)	Floor(1.00)	0	150	18' 6"	-	Ext. Wall Load

SUPPORTS:

		Input Width	Bearing Length	Vertical Reactions (lbs) Live/Dead/Uplift/Total	Detail	Other
1	Stud wall	3.50"	3.50"	1255 / 298 / 0 / 1553	E1: Blocking	1 Ply 9 1/2" TJI® 230
2	Stud wall	3.50"	3.50"	1255 / 298 / 0 / 1553	E1: Blocking	1 Ply 9 1/2" TJI® 230

-See TJ SPECIFIER'S / BUILDERS GUIDE for detail(s): E1: Blocking

DESIGN CONTROLS:

	Maximum	Design	Control	Control	Location
Shear (lbs)	1082	-966	1463	Passed (66%)	Rt. end Span 1 under Floor ADJACENT span loading
Vertical Reaction (lbs)	1553	1553	2410	Passed (64%)	Bearing 2 under Floor ADJACENT span loading
Moment (Ft-Lbs)	3410	3410	3175	Failed (107%)	MID Span 1 under Floor ALTERNATE span loading
Live Load Defl (in)		0.611	0.355	Failed (L/279)	MID Span 1 under Floor ALTERNATE span loading
Total Load Defl (in)		0.608	0.710	Passed (L/281)	MID Span 1 under Floor ALTERNATE span loading
TJPro		38	30	Passed	Span 1

-Deflection Criteria: STANDARD(LL:L/480,TL:L/240). Additional checks follow.
-Left Overhang:(LL:0.200", TL:2L/240).
-Right Overhang:(LL:0.200", TL:2L/240).
-Deflection analysis is based on composite action with single layer of 19/32" Panels (20" Span Rating) GLUED & NAILED wood decking.
-Bracing(Lu): All compression edges (top and bottom) must be braced at 0 o/c unless detailed otherwise. Proper attachment and positioning of lateral bracing is required to achieve member stability.
-The load conditions considered in this design analysis include alternate and adjacent member pattern loading.

ADDITIONAL NOTES:

-IMPORTANT! The analysis presented is output from software developed by Trus Joist (TJ). TJ warrants the sizing of its products by this software will be accomplished in accordance with TJ product design criteria and code accepted design values. The specific product application, input design loads, and stated dimensions have been provided by the software user. This output has not been reviewed by a TJ Associate.
-Not all products are readily available. Check with your supplier or TJ technical representative for product availability.
-THIS ANALYSIS FOR TRUS JOIST PRODUCTS ONLY! PRODUCT SUBSTITUTION VOIDS THIS ANALYSIS.
-Allowable Stress Design methodology was used for Building Code IBC analyzing the TJ Distribution product listed above.

PROJECT INFORMATION:

UM Solar Decathalon

OPERATOR INFORMATION:

John Dumsick
Robert Silman Associates
1053 31st Street NW
Washington, DC 20007
Phone : (202) 333-6230
dumsick@dc.rsapc.com

S:\Projects_No Job Number\UMaryland Leafhouse\Typ. Floor Joist TJI 230 (LL=100 psf).sms

TJ-Beam® 6.25 Serial Number:
User: 2 2/28/2007 11:37:47 PM
Page 2 Engine Version: 6.25.71

Typ. Joist (LL=100psf)

9 1/2" TJI® 230 @ 16" o/c

MEMBER IS INSUFFICIENT DUE TO LOAD

Load Group: Primary Load Group

	2' 1.75"	^	14' 2.50"	^	2' 1.75"
Max. Vertical Reaction Total (lbs)		1553		1553	
Max. Vertical Reaction Live (lbs)		1255		1255	
Selected Bearing Length (in)		3.50(W)		3.50(W)	

Loading on all spans, LDF = 0.90 , 1.0 Dead

Shear at Support (lbs)		-182	101	-101	182
Max Shear at Support (lbs)		-184	114	-114	184
Member Reaction (lbs)		298		298	
Support Reaction (lbs)		298		298	
Moment (Ft-Lbs)	N/A	-359	45	-359	0

Loading on all spans, LDF = 1.00 , 1.0 Dead + 1.0 Floor

Shear at Support (lbs)		-449	946	-946	449
Max Shear at Support (lbs)		-470	1061	-1061	470
Member Reaction (lbs)		1531		1531	
Support Reaction (lbs)		1531		1531	
Moment (Ft-Lbs)	N/A	-666	3103	-666	N/A
Live Deflection (in)	-0.221		0.545		-0.221
Total Deflection (in)	-0.206		0.542		-0.206

ALTERNATE span loading on odd # spans, LDF = 1.00 , 1.0 Dead + 1.0 Floor

Shear at Support (lbs)		-449	101	-101	449
Max Shear at Support (lbs)		-470	114	-114	470
Member Reaction (lbs)		584		584	
Support Reaction (lbs)		584		584	
Moment (Ft-Lbs)	N/A	-666	-262	-666	0
Live Deflection (in)	0.038		-0.065		0.038
Total Deflection (in)	0.052		-0.069		0.052

ALTERNATE span loading on even # spans, LDF = 1.00 , 1.0 Dead + 1.0 Floor

Shear at Support (lbs)		-182	946	-946	182
Max Shear at Support (lbs)		-184	1061	-1061	184
Member Reaction (lbs)		1245		1245	
Support Reaction (lbs)		1245		1245	
Moment (Ft-Lbs)	N/A	-359	3410	-359	N/A
Live Deflection (in)	-0.259		0.611		-0.259
Total Deflection (in)	-0.244		0.608		-0.244

ADJACENT span loading over support # 1, LDF = 1.00, 1.0 Dead + 1.0 Floor

Shear at Support (lbs)		-449	966	-926	182
Max Shear at Support (lbs)		-470	1082	-1039	184
Member Reaction (lbs)		1553		1224	
Support Reaction (lbs)		1553		1224	
Moment (Ft-Lbs)	N/A	-666	3258	-359	N/A
Live Deflection (in)	-0.232		0.578		-0.247
Total Deflection (in)	-0.218		0.575		-0.232

PROJECT INFORMATION:

UM Solar Decathalon

OPERATOR INFORMATION:

John Dumsick
Robert Silman Associates
1053 31st Street NW
Washington, DC 20007
Phone : (202) 333-6230
dumsick@dc.rsapc.com

S:\Projects_No Job Number\UMaryland Leafhouse\Typ. Floor Joist TJI 230 (LL=100 psf).sms

TJ-Beam® 6.25 Serial Number:
User: 2 2/28/2007 11:37:47 PM
Page 3 Engine Version: 6.25.71

Typ. Joist (LL=100psf)

9 1/2" TJI® 230 @ 16" o/c

MEMBER IS INSUFFICIENT DUE TO LOAD

ADJACENT span loading over support # 2, LDF = 1.00, 1.0 Dead + 1.0 Floor

Shear at Support (lbs)		-182 926		-966 449	
Max Shear at Support (lbs)		-184 1039		-1082 470	
Member Reaction (lbs)		1224		1553	
Support Reaction (lbs)		1224		1553	
Moment (Ft-Lbs)	N/A	-359	3258	-666	N/A
Live Deflection (in)	-0.247		0.578		-0.232
Total Deflection (in)	-0.232		0.575		-0.218

PROJECT INFORMATION:

UM Solar Decathalon

OPERATOR INFORMATION:

John Dumsick
Robert Silman Associates
1053 31st Street NW
Washington, DC 20007
Phone : (202) 333-6230
dumsick@dc.rsapc.com

S:\Projects_No Job Number\UMaryland Leafhouse\Typ. Floor Joist TJI 230 (LL=100 psf).sms

TJ-Beam® 6.25 Serial Number:
User: 2 2/28/2007 11:39:49 PM
Page 1 Engine Version: 6.25.71

Typ. Floor Joist @ Range (Load Case 2, LL = 50 psf)

9 1/2" TJI® 230 @ 16" o/c

THIS PRODUCT MEETS OR EXCEEDS THE SET DESIGN CONTROLS FOR THE APPLICATION AND LOADS LISTED

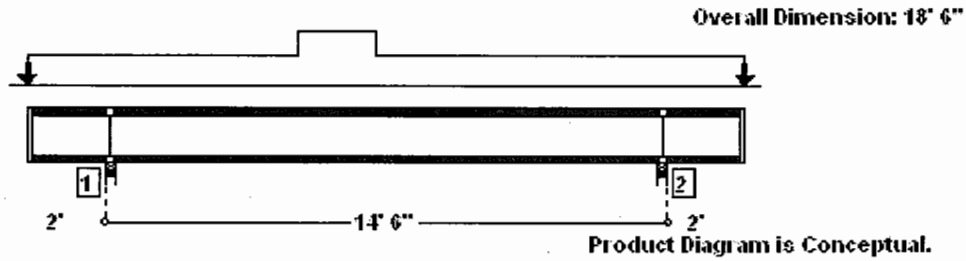

LOADS:

Analysis is for a Joist Member.
Primary Load Group - Residential - Living Areas (psf): 50.0 Live at 100 % duration, 15.0 Dead
Vertical Loads:

Type	Class	Live	Dead	Location	Application	Comment
Point(lbs)	Floor(1.00)	0	150	0	-	Ext. Wall Load
Point(lbs)	Floor(1.00)	0	150	18' 6"	-	Ext. Wall Load
Uniform(plf)	Floor(1.00)	0.0	53.0	7' To 9'	Adds To	Range Load

SUPPORTS:

		Input Width	Bearing Length	Vertical Reactions (lbs) Live/Dead/Uplift/Total	Detail	Other
1	Stud wall	3.50"	3.50"	627 / 397 / 0 / 1025	E1: Blocking	1 Ply 9 1/2" TJI® 230
2	Stud wall	3.50"	3.50"	627 / 379 / 0 / 1006	E1: Blocking	1 Ply 9 1/2" TJI® 230

-See TJ SPECIFIER'S / BUILDERS GUIDE for detail(s): E1: Blocking

DESIGN CONTROLS:

	Maximum	Design	Control	Control	Location
Shear (lbs)	689	639	1463	Passed (44%)	Lt. end Span 1 under Floor ADJACENT span loading
Vertical Reaction (lbs)	1025	1025	2410	Passed (43%)	Bearing 1 under Floor ADJACENT span loading
Moment (Ft-Lbs)	2139	2139	3175	Passed (67%)	MID Span 1 under Floor ALTERNATE span loading
Live Load Defl (in)		0.305	0.355	Passed (L/558)	MID Span 1 under Floor ALTERNATE span loading
Total Load Defl (in)		0.371	0.710	Passed (L/460)	MID Span 1 under Floor ALTERNATE span loading
TJPro		38	30	Passed	Span 1

-Deflection Criteria: STANDARD(LL:L/480,TL:L/240). Additional checks follow.
-Left Overhang:(LL:0.200", TL:2L/240).
-Right Overhang:(LL:0.200", TL:2L/240).
-Deflection analysis is based on composite action with single layer of 19/32" Panels (20" Span Rating) GLUED & NAILED wood decking.
-Bracing(Lu): All compression edges (top and bottom) must be braced at 4' 2" o/c unless detailed otherwise. Proper attachment and positioning of lateral bracing is required to achieve member stability.
-The load conditions considered in this design analysis include alternate and adjacent member pattern loading.

PROJECT INFORMATION:

UM Solar Decathalon

OPERATOR INFORMATION:

John Dumsick
Robert Silman Associates
1053 31st Street NW
Washington, DC 20007
Phone : (202) 333-6230
dumsick@dc.rsapc.com

S:\Projects_No Job Number\UMaryland Leafhouse\Typ. Floor Joist @ Range TJI 230 (50 PSF).sms

TJ-Beam® 6.25 Serial Number:
User: 2 2/28/2007 11:39:49 PM
Page 2 Engine Version: 6.25.71

Typ. Floor Joist @ Range (Load Case 2, LL = 50 psf)

9 1/2" TJI® 230 @ 16" o/c

THIS PRODUCT MEETS OR EXCEEDS THE SET DESIGN CONTROLS FOR THE APPLICATION AND LOADS LISTED

ADDITIONAL NOTES:

-IMPORTANT! The analysis presented is output from software developed by Trus Joist (TJ). TJ warrants the sizing of its products by this software will be accomplished in accordance with TJ product design criteria and code accepted design values. The specific product application, input design loads, and stated dimensions have been provided by the software user. This output has not been reviewed by a TJ Associate.

-Not all products are readily available. Check with your supplier or TJ technical representative for product availability.

-THIS ANALYSIS FOR TRUS JOIST PRODUCTS ONLY! PRODUCT SUBSTITUTION VOIDS THIS ANALYSIS.

-Allowable Stress Design methodology was used for Building Code IBC analyzing the TJ Distribution product listed above.

PROJECT INFORMATION:

UM Solar Decathalon

OPERATOR INFORMATION:

John Dumsick
Robert Silman Associates
1053 31st Street NW
Washington, DC 20007
Phone : (202) 333-6230
dumsick@dc.rsapc.com

S:\Projects_No Job Number\UMaryland Leafhouse\Typ. Floor Joist @ Range TJI 230 (50 PSF).sms

TJ-Beam® 6.25 Serial Number:
User: 2 2/28/2007 11:39:49 PM
Page 3 Engine Version: 6.25.71

Typ. Floor Joist @ Range (Load Case 2, LL = 50 psf)

9 1/2" TJI® 230 @ 16" o/c

THIS PRODUCT MEETS OR EXCEEDS THE SET DESIGN CONTROLS FOR THE APPLICATION AND LOADS LISTED

Load Group: Primary Load Group

	2' 1.75"	^	14' 2.50"	^	2' 1.75"
Max. Vertical Reaction Total (lbs)		1025		1006	
Max. Vertical Reaction Live (lbs)		627		627	
Selected Bearing Length (in)		3.50(W)		3.50(W)	
Max. Unbraced Length (in)	102	102	50	102	102

Loading on all spans, LDF = 0.90 , 1.0 Dead

Shear at Support (lbs)		-190	190	-173	190
Max Shear at Support (lbs)		-193	204	-186	193
Shear Within Span (lbs)	N/A		107		N/A
Member Reaction (lbs)		397		379	
Support Reaction (lbs)		397		379	
Moment (Ft-Lbs)	N/A	-368	468	-368	N/A

Loading on all spans, LDF = 1.00 , 1.0 Dead + 1.0 Floor

Shear at Support (lbs)		-323	628	-611	323
Max Shear at Support (lbs)		-336	678	-659	336
Shear Within Span (lbs)	N/A		257		N/A
Member Reaction (lbs)		1014		995	
Support Reaction (lbs)		1014		995	
Moment (Ft-Lbs)	N/A	-521	1986	-521	N/A
Live Deflection (in)	-0.110		0.273		-0.110
Total Deflection (in)	-0.125		0.338		-0.122

ALTERNATE span loading on odd # spans, LDF = 1.00 , 1.0 Dead + 1.0 Floor

Shear at Support (lbs)		-323	190	-173	323
Max Shear at Support (lbs)		-336	204	-186	336
Shear Within Span (lbs)	N/A		107		N/A
Member Reaction (lbs)		540		522	
Support Reaction (lbs)		540		522	
Moment (Ft-Lbs)	N/A	-521	314	-521	N/A
Live Deflection (in)	0.019		-0.033		0.019
Total Deflection (in)	0.005		0.033		0.007

ALTERNATE span loading on even # spans, LDF = 1.00 , 1.0 Dead + 1.0 Floor

Shear at Support (lbs)		-190	628	-611	190
Max Shear at Support (lbs)		-193	678	-659	193
Shear Within Span (lbs)	N/A		257		N/A
Member Reaction (lbs)		871		852	
Support Reaction (lbs)		871		852	
Moment (Ft-Lbs)	N/A	-368	2139	-368	N/A
Live Deflection (in)	-0.129		0.305		-0.129
Total Deflection (in)	-0.144		0.371		-0.141

PROJECT INFORMATION:
UM Solar Decathalon

OPERATOR INFORMATION:
John Dumsick
Robert Silman Associates
1053 31st Street NW
Washington, DC 20007
Phone : (202) 333-6230
dumsick@dc.rsapc.com

S:\Projects_No Job Number\UMaryland Leafhouse\Typ. Floor Joist @ Range TJI 230 (50 PSF).sms

TJ-Beam® 6.25 Serial Number:
User: 2 2/28/2007 11:39:49 PM
Page 4 Engine Version: 6.25.71

Typ. Floor Joist @ Range (Load Case 2, LL = 50 psf)

9 1/2" TJI® 230 @ 16" o/c

THIS PRODUCT MEETS OR EXCEEDS THE SET DESIGN CONTROLS FOR THE APPLICATION AND LOADS LISTED

ADJACENT span loading over support # 1, LDF = 1.00, 1.0 Dead + 1.0 Floor

Shear at Support (lbs)		-323	639	-601	190
Max Shear at Support (lbs)		-336	689	-649	193
Shear Within Span (lbs)	N/A		268		N/A
Member Reaction (lbs)		1025		841	
Support Reaction (lbs)		1025		841	
Moment (Ft-Lbs)	N/A	-521	2059	-368	N/A
Live Deflection (in)	-0.116		0.289		-0.123
Total Deflection (in)	-0.131		0.355		-0.135

ADJACENT span loading over support # 2, LDF = 1.00, 1.0 Dead + 1.0 Floor

Shear at Support (lbs)		-190	618	-621	323
Max Shear at Support (lbs)		-193	667	-670	336
Shear Within Span (lbs)	N/A		247		N/A
Member Reaction (lbs)		860		1006	
Support Reaction (lbs)		860		1006	
Moment (Ft-Lbs)	N/A	-368	2067	-521	N/A
Live Deflection (in)	-0.123		0.289		-0.116
Total Deflection (in)	-0.138		0.355		-0.128

PROJECT INFORMATION:

UM Solar Decathalon

OPERATOR INFORMATION:

John Dumsick
Robert Silman Associates
1053 31st Street NW
Washington, DC 20007
Phone : (202) 333-6230
dumsick@dc.rsapc.com

S:\Projects_No Job Number\UMaryland Leafhouse\Typ. Floor Joist @ Range TJI 230 (50 PSF).sms

TJ-Beam® 6.25 Serial Number:
User: 2 2/28/2007 11:41:01 PM
Page 1 Engine Version: 6.25.71

Typ. Floor Joist @ Range (Load Case 3, LL=100psf)

9 1/2" TJI® 230 @ 16" o/c

MEMBER IS INSUFFICIENT DUE TO LOAD

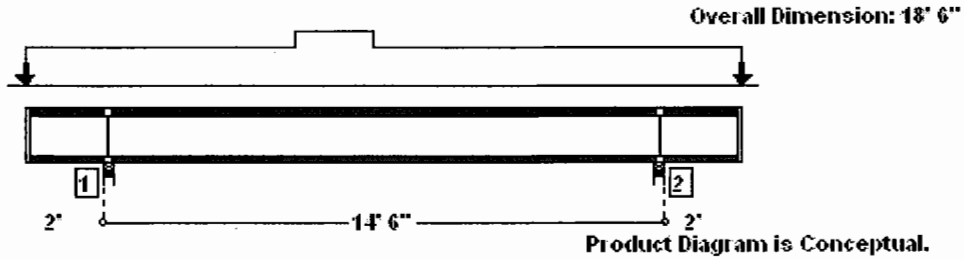

LOADS:

Analysis is for a Joist Member.
Primary Load Group - Residential - Living Areas (psf): 100.0 Live at 100 % duration, 15.0 Dead
Vertical Loads:

Type	Class	Live	Dead	Location	Application	Comment
Point(lbs)	Floor(1.00)	0	150	0	-	Ext. Wall Load
Point(lbs)	Floor(1.00)	0	150	18' 6"	-	Ext. Wall Load
Uniform(plf)	Floor(1.00)	0.0	53.0	7' To 9'	Adds To	Range Load

SUPPORTS:

		Input Width	Bearing Length	Vertical Reactions (lbs) Live/Dead/Uplift/Total	Detail	Other
1	Stud wall	3.50"	3.50"	1255 / 397 / 0 / 1652	E1: Blocking	1 Ply 9 1/2" TJI® 230
2	Stud wall	3.50"	3.50"	1255 / 379 / 0 / 1634	E1: Blocking	1 Ply 9 1/2" TJI® 230

-See TJ SPECIFIER'S / BUILDERS GUIDE for detail(s): E1: Blocking

DESIGN CONTROLS:

	Maximum	Design	Control	Control	Location
Shear (lbs)	1173	1041	1463	Passed (71%)	Lt. end Span 1 under Floor ADJACENT span loading
Vertical Reaction (lbs)	1652	1652	2410	Passed (69%)	Bearing 1 under Floor ADJACENT span loading
Moment (Ft-Lbs)	3818	3818	3175	Failed (120%)	MID Span 1 under Floor ALTERNATE span loading
Live Load Defl (in)		0.611	0.355	Failed (L/279)	MID Span 1 under Floor ALTERNATE span loading
Total Load Defl (in)		0.676	0.710	Passed (L/252)	MID Span 1 under Floor ALTERNATE span loading
TJPro		38	30	Passed	Span 1

-Deflection Criteria: STANDARD(LL:L/480,TL:L/240). Additional checks follow.
-Left Overhang:(LL:0.200", TL:2L/240).
-Right Overhang:(LL:0.200", TL:2L/240).
-Deflection analysis is based on composite action with single layer of 19/32" Panels (20" Span Rating) GLUED & NAILED wood decking.
-Bracing(Lu): All compression edges (top and bottom) must be braced at 0 o/c unless detailed otherwise. Proper attachment and positioning of lateral bracing is required to achieve member stability.
-The load conditions considered in this design analysis include alternate and adjacent member pattern loading.

ADDITIONAL NOTES:

-IMPORTANT! The analysis presented is output from software developed by Trus Joist (TJ). TJ warrants the sizing of its products by this software will be accomplished in accordance with TJ product design criteria and code accepted design values. The specific product application, input design loads, and stated dimensions have been provided by the software user. This output has not been reviewed by a TJ Associate.
-Not all products are readily available. Check with your supplier or TJ technical representative for product availability.
-THIS ANALYSIS FOR TRUS JOIST PRODUCTS ONLY! PRODUCT SUBSTITUTION VOIDS THIS ANALYSIS.
-Allowable Stress Design methodology was used for Building Code IBC analyzing the TJ Distribution product listed above.

PROJECT INFORMATION:

UM Solar Decathalon

OPERATOR INFORMATION:

John Dumsick
Robert Silman Associates
1053 31st Street NW
Washington, DC 20007
Phone : (202) 333-6230
dumsick@dc.rsapc.com

S:\Projects_No Job Number\UMaryland Leafhouse\Typ. Floor Joist @ Range TJI 230 (100 PSF).sms

TJ-Beam® 6.25 Serial Number:
User: 2 2/28/2007 11:41:01 PM
Page 2 Engine Version: 6.25.71

Typ. Floor Joist @ Range (Load Case 3, LL=100psf)

9 1/2" TJI® 230 @ 16" o/c

MEMBER IS INSUFFICIENT DUE TO LOAD

Load Group: Primary Load Group

	2' 1.75" ^	14' 2.50" ^	2' 1.75"
Max. Vertical Reaction Total (lbs)	1652	1634	
Max. Vertical Reaction Live (lbs)	1255	1255	
Selected Bearing Length (in)	3.50(W)	3.50(W)	

Loading on all spans, LDF = 0.90 , 1.0 Dead

Shear at Support (lbs)		-190	182	-165	190
Max Shear at Support (lbs)		-193	204	-186	193
Shear Within Span (lbs)	N/A	107			N/A
Member Reaction (lbs)		397		379	
Support Reaction (lbs)		397		379	
Moment (Ft-Lbs)	N/A	-368	468	-368	N/A

Loading on all spans, LDF = 1.00 , 1.0 Dead + 1.0 Floor

Shear at Support (lbs)		-457	1021	-1005	457
Max Shear at Support (lbs)		-479	1152	-1133	479
Shear Within Span (lbs)	N/A	407			N/A
Member Reaction (lbs)		1631		1612	
Support Reaction (lbs)		1631		1612	
Moment (Ft-Lbs)	N/A	-675	3511	-675	N/A
Live Deflection (in)	-0.221	0.545			-0.221
Total Deflection (in)	-0.235	0.611			-0.232

ALTERNATE span loading on odd # spans, LDF = 1.00 , 1.0 Dead + 1.0 Floor

Shear at Support (lbs)		-457	182	-165	457
Max Shear at Support (lbs)		-479	204	-186	479
Shear Within Span (lbs)	N/A	107			N/A
Member Reaction (lbs)		683		665	
Support Reaction (lbs)		683		665	
Moment (Ft-Lbs)	N/A	-675	161	-675	N/A
Live Deflection (in)	0.038	-0.065			0.038
Total Deflection (in)	0.024	-0.015			0.026

ALTERNATE span loading on even # spans, LDF = 1.00 , 1.0 Dead + 1.0 Floor

Shear at Support (lbs)		-190	1021	-1005	190
Max Shear at Support (lbs)		-193	1152	-1133	193
Shear Within Span (lbs)	N/A	407			N/A
Member Reaction (lbs)		1345		1326	
Support Reaction (lbs)		1345		1326	
Moment (Ft-Lbs)	N/A	-368	3818	-368	N/A
Live Deflection (in)	-0.259	0.611			-0.259
Total Deflection (in)	-0.273	0.676			-0.271

PROJECT INFORMATION:

UM Solar Decathalon

OPERATOR INFORMATION:

John Dumsick
Robert Silman Associates
1053 31st Street NW
Washington, DC 20007
Phone : (202) 333-6230
dumsick@dc.rsapc.com

S:\Projects_No Job Number\UMaryland Leafhouse\Typ. Floor Joist @ Range TJI 230 (100 PSF).sms

TJ-Beam® 6.25 Serial Number:
User: 2 2/28/2007 11:41:01 PM
Page 3 Engine Version: 6.25.71

Typ. Floor Joist @ Range (Load Case 3, LL=100psf)

9 1/2" TJI® 230 @ 16" o/c

MEMBER IS INSUFFICIENT DUE TO LOAD

ADJACENT span loading over support # 1, LDF = 1.00, 1.0 Dead + 1.0 Floor

Shear at Support (lbs)		-457	1041	-985	190
Max Shear at Support (lbs)		-479	1173	-1111	193
Shear Within Span (lbs)	N/A		429		N/A
Member Reaction (lbs)		1652		1304	
Support Reaction (lbs)		1652		1304	
Moment (Ft-Lbs)	N/A	-675	3660	-368	N/A
Live Deflection (in)	-0.232		0.578		-0.247
Total Deflection (in)	-0.247		0.644		-0.259

ADJACENT span loading over support # 2, LDF = 1.00, 1.0 Dead + 1.0 Floor

Shear at Support (lbs)		-190	1002	-1024	457
Max Shear at Support (lbs)		-193	1130	-1155	479
Shear Within Span (lbs)	N/A		386		N/A
Member Reaction (lbs)		1323		1634	
Support Reaction (lbs)		1323		1634	
Moment (Ft-Lbs)	N/A	-368	3671	-675	N/A
Live Deflection (in)	-0.247		0.578		-0.232
Total Deflection (in)	-0.261		0.644		-0.244

PROJECT INFORMATION:

UM Solar Decathalon

OPERATOR INFORMATION:

John Dumsick
Robert Silman Associates
1053 31st Street NW
Washington, DC 20007
Phone : (202) 333-6230
dumsick@dc.rsapc.com

S:\Projects_No Job Number\UMaryland Leafhouse\Typ. Floor Joist @ Range TJI 230 (100 PSF).sms

INTERIOR POSTS BEARING ON LVL FLOOR BM. (C RANGE)

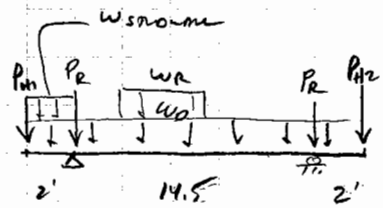

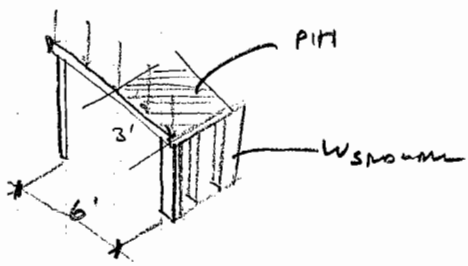

BM SW = (4.8 plf × 3) = 14.4 plf
Floor DL = 12 psf × (16/12) = 16 plf } 30 plf
W_R (see LC#2) = 53 plf (7' < x < 9')
TRY LL = 100 psf.
P_{ROOF} (From (2) 1 3/4" × 18" 1.9E MICRO-LAM LVL)
= 7399 lbs. @ x = 2.5' & x = 15'3"

P_{H1} = ((SNOW = 30 psf) + (FLAT = 20 psf)) × TW
TW = 6'/2 = 3' × 2' WIDE = 6 S.F.
= 50 × 6 = 300 lbs. + EXT. WALL = 150 (SEE L.C. #1)
= 450 lbs

W_{SNOWM} = 2×4 + 6 yr. BOARD SIDES = 8 psf
8 psf × 8' = 64 plf

P_{H2}. → W = 2'-3" ≈ TW = W/2 say 1' TL = 10'-6"
(SNOW = 30 psf) + (FLAT = 20 psf) × 1' × 10.5
= 525 lbs. + 150 (EXT. WALL) = 675 lbs.
(L.C. #1)

PER TJ-BEAM.
CAN USE (3) 1 3/4" × 9 1/2" 1.9E MICRO-LAM LVL.

TJ-Beam® 6.25 Serial Number:
User: 2 2/28/2007 11:28:40 PM
Page 1 Engine Version: 6.25.71

Interior Post Bearing on LVL Floor BM. @ Range (LL=100psf)

3 Pcs of 1 3/4" x 9 1/2" 1.9E Microllam® LVL

THIS PRODUCT MEETS OR EXCEEDS THE SET DESIGN CONTROLS FOR THE APPLICATION AND LOADS LISTED

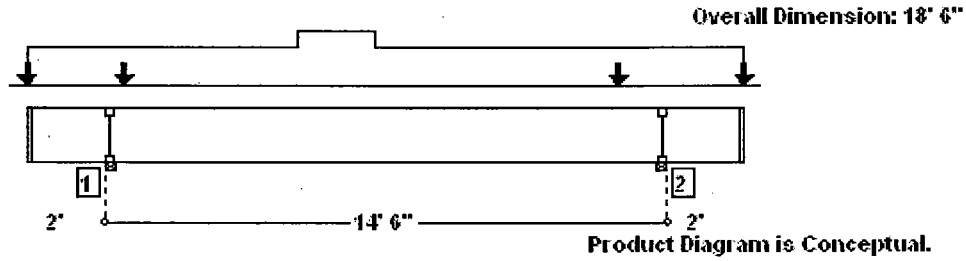

LOADS:

Analysis is for a Header (Flush Beam) Member. Tributary Load Width: 2'
Primary Load Group - Residential - Living Areas (psf): 100.0 Live at 100 % duration, 12.0 Dead
Vertical Loads:

Type	Class	Live	Dead	Location	Application	Comment
Point(lbs)	Floor(1.00)	0	450	0	-	Ext. Wall Load and 6' Header
Point(lbs)	Floor(1.00)	0	675	18' 6"	-	Ext. Wall Load and 10.5 Header
Uniform(plf)	Floor(1.00)	0.0	53.0	7' To 9'	Adds To	Range Load
Uniform(plf)	Floor(1.00)	0.0	14.0	0 To 18' 6"	Adds To	triple LVL self wt.
Point(lbs)	Floor(1.00)	0	7399	2' 6"	-	Roof
Point(lbs)	Floor(1.00)	0	7399	15' 3"	-	Roof

SUPPORTS:

		Input Width	Bearing Length	Vertical Reactions (lbs) Live/Dead/Uplift/Total	Detail	Other
1	Plate on steel beam	3.50"	4.76"	1882 / 8747 / 0 / 10629	E1: Blocking	1 Ply 1 3/4" x 9 1/2" 1.9E Microllam® LVL
2	Plate on steel beam	3.50"	4.54"	1882 / 8240 / 0 / 10122	E1: Blocking	1 Ply 1 3/4" x 9 1/2" 1.9E Microllam® LVL

-See TJ SPECIFIER'S / BUILDERS GUIDE for detail(s): E1: Blocking
-Bearing length requirement exceeds input at support(s) 1, 2. Supplemental hardware is required to satisfy bearing requirements.

DESIGN CONTROLS:

	Maximum	Design	Control	Control	Location
Shear (lbs)	9639	-8671	9476	Passed (92%)	Rt. end Span 1 under Floor ADJACENT span loading
Moment (Ft-Lbs)	10927	10927	17662	Passed (62%)	MID Span 1 under Floor ALTERNATE span loading
Live Load Defl (in)		0.270	0.355	Passed (L/632)	MID Span 1 under Floor ALTERNATE span loading
Total Load Defl (in)		0.613	0.710	Passed (L/278)	MID Span 1 under Floor ALTERNATE span loading

-Deflection Criteria: STANDARD(LL:L/480,TL:L/240). Additional checks follow.
-Left Overhang:(LL:0.200", TL:2L/240).
-Right Overhang:(LL:0.200", TL:2L/240).
-Bracing(Lu): All compression edges (top and bottom) must be braced at 18' 6" o/c unless detailed otherwise. Proper attachment and positioning of lateral bracing is required to achieve member stability.
-The load conditions considered in this design analysis include alternate and adjacent member pattern loading.

PROJECT INFORMATION:

UM Solar Decathalon

OPERATOR INFORMATION:

John Dumsick
Robert Silman Associates
1053 31st Street NW
Washington, DC 20007
Phone : (202) 333-6230
dumsick@dc.rsapc.com

S:\Projects_No Job Number\UMaryland Leafhouse\LVL Beam @ Range (100 PSF).sms

TJ-Beam® 6.25 Serial Number:
User: 2 2/28/2007 11:28:41 PM
Page 2 Engine Version: 6.25.71

Interior Post Bearing on LVL Floor BM. @ Range (LL=100psf)

3 Pcs of 1 3/4" x 9 1/2" 1.9E Microllam® LVL

THIS PRODUCT MEETS OR EXCEEDS THE SET DESIGN CONTROLS FOR THE APPLICATION AND LOADS LISTED

ADDITIONAL NOTES:

-IMPORTANT! The analysis presented is output from software developed by Trus Joist (TJ). TJ warrants the sizing of its products by this software will be accomplished in accordance with TJ product design criteria and code accepted design values. The specific product application, input design loads, and stated dimensions have been provided by the software user. This output has not been reviewed by a TJ Associate.

-Not all products are readily available. Check with your supplier or TJ technical representative for product availability.

-THIS ANALYSIS FOR TRUS JOIST PRODUCTS ONLY! PRODUCT SUBSTITUTION VOIDS THIS ANALYSIS.

-Allowable Stress Design methodology was used for Building Code IBC analyzing the TJ Distribution product listed above.

-Note: See TJ SPECIFIER'S / BUILDER'S GUIDES for multiple ply connection.

PROJECT INFORMATION:

UM Solar Decathalon

OPERATOR INFORMATION:

John Dumsick
Robert Silman Associates
1053 31st Street NW
Washington, DC 20007
Phone : (202) 333-6230
dumsick@dc.rsapc.com

S:\Projects_No Job Number\UMaryland Leafhouse\LVL Beam @ Range (100 PSF).sms

TJ-Beam® 6.25 Serial Number:
User: 2 2/28/2007 11:28:41 PM
Page 3 Engine Version: 6.25.71

Interior Post Bearing on LVL Floor BM. @ Range (LL=100psf)

3 Pcs of 1 3/4" x 9 1/2" 1.9E Microllam® LVL

THIS PRODUCT MEETS OR EXCEEDS THE SET DESIGN CONTROLS FOR THE APPLICATION AND LOADS LISTED

Load Group: Primary Load Group

	2' 1.75" ^	14' 2.50" ^		2' 1.75"	
Max. Vertical Reaction Total (lbs)		10629		10122	
Max. Vertical Reaction Live (lbs)		1882		1882	
Required Bearing Length in		4.76(W)		4.54(W)	
Max. Unbraced Length (in)	222	222	222	222	222

Loading on all spans, LDF = 0.90 , 1.0 Dead

Shear at Support (lbs)		-513	2685	-7405	738
Max Shear at Support (lbs)		-561	8186	-7454	786
Shear Within Span (lbs)	N/A		-7397		N/A
Member Reaction (lbs)		8747		8240	
Support Reaction (lbs)		8747		8240	
Moment (Ft-Lbs)	0	-1085	6631	-1568	0

Loading on all spans, LDF = 1.00 , 1.0 Dead + 1.0 Floor

Shear at Support (lbs)		-754	3919	-8639	979
Max Shear at Support (lbs)		-990	9607	-8875	1215
Shear Within Span (lbs)	N/A		-8597		N/A
Member Reaction (lbs)		10597		10090	
Support Reaction (lbs)		10597		10090	
Moment (Ft-Lbs)	0	-1545	10467	-2028	0
Live Deflection (in)	-0.106		0.240		-0.106
Total Deflection (in)	-0.258		0.583		-0.298

ALTERNATE span loading on odd # spans, LDF = 1.00 , 1.0 Dead + 1.0 Floor

Shear at Support (lbs)		-754	2685	-7405	979
Max Shear at Support (lbs)		-990	8186	-7454	1215
Shear Within Span (lbs)	N/A		-7397		N/A
Member Reaction (lbs)		9176		8669	
Support Reaction (lbs)		9176		8669	
Moment (Ft-Lbs)	0	-1545	6171	-2028	0
Live Deflection (in)	0.018		-0.029		0.018
Total Deflection (in)	-0.133		0.315		-0.173

ALTERNATE span loading on even # spans, LDF = 1.00 , 1.0 Dead + 1.0 Floor

Shear at Support (lbs)		-513	3919	-8639	738
Max Shear at Support (lbs)		-561	9607	-8875	786
Shear Within Span (lbs)	N/A		-8597		N/A
Member Reaction (lbs)		10168		9661	
Support Reaction (lbs)		10168		9661	
Moment (Ft-Lbs)	0	-1085	10927	-1568	0
Live Deflection (in)	-0.124		0.270		-0.124
Total Deflection (in)	-0.276		0.613		-0.316

PROJECT INFORMATION:
UM Solar Decathalon

OPERATOR INFORMATION:
John Dumsick
Robert Silman Associates
1053 31st Street NW
Washington, DC 20007
Phone : (202) 333-6230
dumsick@dc.rsapc.com

S:\Projects_No Job Number\UMaryland Leafhouse\LVL Beam @ Range (100 PSF).sms

TJ-Beam® 6.25 Serial Number:
User: 2 2/28/2007 11:28:41 PM
Page 4 Engine Version: 6.25.71

Interior Post Bearing on LVL Floor BM. @ Range (LL=100psf)

3 Pcs of 1 3/4" x 9 1/2" 1.9E Microllam® LVL

THIS PRODUCT MEETS OR EXCEEDS THE SET DESIGN CONTROLS FOR THE APPLICATION AND LOADS LISTED

ADJACENT span loading over support # 1, LDF = 1.00, 1.0 Dead + 1.0 Floor

Shear at Support (lbs)		-754	3951	-8606	738
Max Shear at Support (lbs)		-990	9639	-8842	786
Shear Within Span (lbs)	N/A		-8564		N/A
Member Reaction (lbs)		10629		9628	
Support Reaction (lbs)		10629		9628	
Moment (Ft-Lbs)	0	-1545	10739	-1568	0
Live Deflection (in)	-0.112		0.255		-0.119
Total Deflection (in)	-0.263		0.598		-0.310

ADJACENT span loading over support # 2, LDF = 1.00, 1.0 Dead + 1.0 Floor

Shear at Support (lbs)		-513	3886	-8671	979
Max Shear at Support (lbs)		-561	9574	-8907	1215
Shear Within Span (lbs)	N/A		-8629		N/A
Member Reaction (lbs)		10135		10122	
Support Reaction (lbs)		10135		10122	
Moment (Ft-Lbs)	0	-1085	10659	-2028	0
Live Deflection (in)	-0.119		0.255		-0.112
Total Deflection (in)	-0.270		0.598		-0.303

PROJECT INFORMATION:

UM Solar Decathalon

OPERATOR INFORMATION:

John Dumsick
Robert Silman Associates
1053 31st Street NW
Washington, DC 20007
Phone : (202) 333-6230
dumsick@dc.rsapc.com

S:\Projects_No Job Number\UMaryland Leafhouse\LVL Beam @ Range (100 PSF).sms

INTERIOR POSTS BEARING ON LVL FLOOR BM (@ BEDROOM)

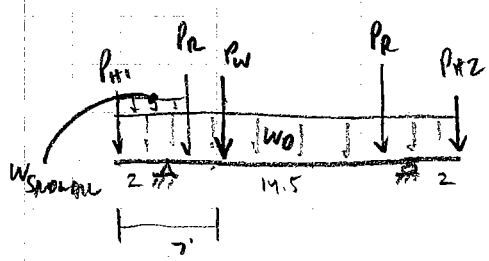

P_R = 7399 LBS @ x = 2.5' x = 15' 3"

w_D = 14 LBS/LF + 12 psf × 16/12 = 30 plf

P_W = HEADER LOAD = 2' × (10'/2) × 8 psf
= 80 LBS.

W_{SMOKE} = 2×4 W/ 6 YR. BUILT SIDES = 8 psf
8 psf × 8' = 64 plf

P_{H1} = EXT. WALL = 150 LBS.

P_{H2} = (w = 2'-3") T_W = W/2 ≈ 1' T_L = 10.5'/2
T_L = 5.25'
(SNOW = 30 PSF) + (FLOOR = 20 PSF) × 1' × 5.25
= 262.5 + 150 (EXT. WALL) = 413 LBS.

PER TJ-BEAM → (3) 1.9E MICRO LVL'S 1 3/4 × 9 1/2.

TJ-Beam® 6.25 Serial Number:
User: 2 3/1/2007 12:08:57 AM
Page 1 Engine Version: 6.25.71

Interior Post Bearing on LVL Floor BM. @ Range (LL=100psf)

3 Pcs of 1 3/4" x 9 1/2" 1.9E Microllam® LVL

THIS PRODUCT MEETS OR EXCEEDS THE SET DESIGN CONTROLS FOR THE APPLICATION AND LOADS LISTED

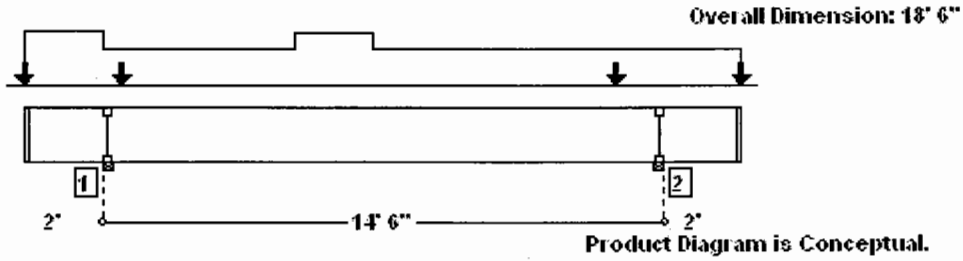

LOADS:

Analysis is for a Header (Flush Beam) Member. Tributary Load Width: 2'
Primary Load Group - Residential - Living Areas (psf): 100.0 Live at 100 % duration, 12.0 Dead
Vertical Loads:

Type	Class	Live	Dead	Location	Application	Comment
Point(lbs)	Floor(1.00)	0	150	0	-	Ext. Wall Load and 6' Header
Point(lbs)	Floor(1.00)	0	413	18' 6"	-	Ext. Wall Load and 10.5 Header
Uniform(plf)	Floor(1.00)	0.0	53.0	7' To 9'	Adds To	Range Load
Uniform(plf)	Floor(1.00)	0.0	14.0	0 To 18' 6"	Adds To	triple LVL self wt.
Point(lbs)	Floor(1.00)	0	7399	2' 6"	-	Roof
Point(lbs)	Floor(1.00)	0	7399	15' 3"	-	Roof
Uniform(plf)	Floor(1.00)	0.0	64.0	0 To 2'	Adds To	Stud wall

SUPPORTS:

		Input Width	Bearing Length	Vertical Reactions (lbs) Live/Dead/Uplift/Total	Detail	Other
1	Plate on steel beam	3.50"	4.69"	1882 / 8579 / 0 / 10462	E1: Blocking	1 Ply 1 3/4" x 9 1/2" 1.9E Microllam® LVL
2	Plate on steel beam	3.50"	4.42"	1882 / 7973 / 0 / 9856	E1: Blocking	1 Ply 1 3/4" x 9 1/2" 1.9E Microllam® LVL

-See TJ SPECIFIER'S / BUILDERS GUIDE for detail(s): E1: Blocking
-Bearing length requirement exceeds input at support(s) 1, 2. Supplemental hardware is required to satisfy bearing requirements.

DESIGN CONTROLS:

	Maximum	Design	Control	Control	Location
Shear (lbs)	9644	-8667	9476	Passed (91%)	Rt. end Span 1 under Floor ADJACENT span loading
Moment (Ft-Lbs)	11462	11462	17662	Passed (65%)	MID Span 1 under Floor ALTERNATE span loading
Live Load Defl (in)		0.270	0.355	Passed (L/632)	MID Span 1 under Floor ALTERNATE span loading
Total Load Defl (in)		0.646	0.710	Passed (L/264)	MID Span 1 under Floor ALTERNATE span loading

-Deflection Criteria: STANDARD(LL:L/480,TL:L/240). Additional checks follow.
-Left Overhang:(LL:0.200", TL:2L/240).
-Right Overhang:(LL:0.200", TL:2L/240).
-Bracing(Lu): All compression edges (top and bottom) must be braced at 18' 6" o/c unless detailed otherwise. Proper attachment and positioning of lateral bracing is required to achieve member stability.
-The load conditions considered in this design analysis include alternate and adjacent member pattern loading.

PROJECT INFORMATION:

UM Solar Decathalon

OPERATOR INFORMATION:

John Dumsick
Robert Silman Associates
1053 31st Street NW
Washington, DC 20007
Phone : (202) 333-6230
dumsick@dc.rsapc.com

S:\Projects_No Job Number\UMaryland Leafhouse\LVL Beam @ Range (100 PSF).sms

TJ-Beam® 6.25 Serial Number:
User: 2 3/1/2007 12:08:57 AM
Page 2 Engine Version: 6.25.71

Interior Post Bearing on LVL Floor BM. @ Range (LL=100psf)

3 Pcs of 1 3/4" x 9 1/2" 1.9E Microllam® LVL

THIS PRODUCT MEETS OR EXCEEDS THE SET DESIGN CONTROLS FOR THE APPLICATION AND LOADS LISTED

ADDITIONAL NOTES:

-IMPORTANT! The analysis presented is output from software developed by Trus Joist (TJ). TJ warrants the sizing of its products by this software will be accomplished in accordance with TJ product design criteria and code accepted design values. The specific product application, input design loads, and stated dimensions have been provided by the software user. This output has not been reviewed by a TJ Associate.

-Not all products are readily available. Check with your supplier or TJ technical representative for product availability.

-THIS ANALYSIS FOR TRUS JOIST PRODUCTS ONLY! PRODUCT SUBSTITUTION VOIDS THIS ANALYSIS.

-Allowable Stress Design methodology was used for Building Code IBC analyzing the TJ Distribution product listed above.

-Note: See TJ SPECIFIER'S / BUILDER'S GUIDES for multiple ply connection.

PROJECT INFORMATION:

UM Solar Decathalon

OPERATOR INFORMATION:

John Dumsick
Robert Silman Associates
1053 31st Street NW
Washington, DC 20007
Phone : (202) 333-6230
dumsick@dc.rsapc.com

S:\Projects_No Job Number\UMaryland Leafhouse\LVL Beam @ Range (100 PSF).sms

TJ-Beam® 6.25 Serial Number:
User: 2 3/1/2007 12:08:57 AM
Page 3 Engine Version: 6.25.71

Interior Post Bearing on LVL Floor BM. @ Range (LL=100psf)

3 Pcs of 1 3/4" x 9 1/2" 1.9E Microllam® LVL

THIS PRODUCT MEETS OR EXCEEDS THE SET DESIGN CONTROLS FOR THE APPLICATION AND LOADS LISTED

Load Group: Primary Load Group

	2' 1.75" ^	14' 2.50" ^	2' 1.75"
Max. Vertical Reaction Total (lbs)	10462	9856	
Max. Vertical Reaction Live (lbs)	1882	1882	
Required Bearing Length in	4.69(W)	4.42(W)	
Max. Unbraced Length (in)	222 222 222	222 222	

Loading on all spans, LDF = 0.90 , 1.0 Dead

Shear at Support (lbs)		-290	2690	-7401	476
Max Shear at Support (lbs)		-389	8190	-7449	524
Shear Within Span (lbs)	N/A		-7392		N/A
Member Reaction (lbs)		8579		7973	
Support Reaction (lbs)		8579		7973	
Moment (Ft-Lbs)	N/A	-588	7188	-1005	0

Loading on all spans, LDF = 1.00 , 1.0 Dead + 1.0 Floor

Shear at Support (lbs)		-532	3923	-8634	717
Max Shear at Support (lbs)		-818	9611	-8870	953
Shear Within Span (lbs)	N/A		-8592		N/A
Member Reaction (lbs)		10429		9823	
Support Reaction (lbs)		10429		9823	
Moment (Ft-Lbs)	N/A	-1048	11002	-1466	0
Live Deflection (in)	-0.106		0.240		-0.106
Total Deflection (in)	-0.279		0.617		-0.320

ALTERNATE span loading on odd # spans, LDF = 1.00 , 1.0 Dead + 1.0 Floor

Shear at Support (lbs)		-532	2690	-7401	717
Max Shear at Support (lbs)		-818	8190	-7449	953
Shear Within Span (lbs)	N/A		-7392		N/A
Member Reaction (lbs)		9009		8403	
Support Reaction (lbs)		9009		8403	
Moment (Ft-Lbs)	N/A	-1048	6728	-1466	0
Live Deflection (in)	0.018		-0.029		0.018
Total Deflection (in)	-0.154		0.348		-0.195

ALTERNATE span loading on even # spans, LDF = 1.00 , 1.0 Dead + 1.0 Floor

Shear at Support (lbs)		-290	3923	-8634	476
Max Shear at Support (lbs)		-389	9611	-8870	524
Shear Within Span (lbs)	N/A		-8592		N/A
Member Reaction (lbs)		10000		9394	
Support Reaction (lbs)		10000		9394	
Moment (Ft-Lbs)	N/A	-588	11462	-1005	0
Live Deflection (in)	-0.124		0.270		-0.124
Total Deflection (in)	-0.297		0.646		-0.338

PROJECT INFORMATION:
UM Solar Decathalon

OPERATOR INFORMATION:
John Dumsick
Robert Silman Associates
1053 31st Street NW
Washington, DC 20007
Phone : (202) 333-6230
dumsick@dc.rsapc.com

S:\Projects_No Job Number\UMaryland Leafhouse\LVL Beam @ Range (100 PSF).sms

TJ-Beam® 6.25 Serial Number:
User: 2 3/1/2007 12:08:57 AM
Page 4 Engine Version: 6.25.71

Interior Post Bearing on LVL Floor BM. @ Range (LL=100psf)

3 Pcs of 1 3/4" x 9 1/2" 1.9E Microllam® LVL

THIS PRODUCT MEETS OR EXCEEDS THE SET DESIGN CONTROLS FOR THE APPLICATION AND LOADS LISTED

ADJACENT span loading over support # 1, LDF = 1.00, 1.0 Dead + 1.0 Floor

Shear at Support (lbs)		-532	3956	-8602	476
Max Shear at Support (lbs)		-818	9644	-8838	524
Shear Within Span (lbs)	N/A		-8560		N/A
Member Reaction (lbs)		10462		9362	
Support Reaction (lbs)		10462		9362	
Moment (Ft-Lbs)	N/A	-1048	11275	-1005	0
Live Deflection (in)	-0.112		0.255		-0.119
Total Deflection (in)	-0.284		0.632		-0.332

ADJACENT span loading over support # 2, LDF = 1.00, 1.0 Dead + 1.0 Floor

Shear at Support (lbs)		-290	3891	-8667	717
Max Shear at Support (lbs)		-389	9579	-8903	953
Shear Within Span (lbs)	N/A		-8625		N/A
Member Reaction (lbs)		9968		9856	
Support Reaction (lbs)		9968		9856	
Moment (Ft-Lbs)	N/A	-588	11193	-1466	0
Live Deflection (in)	-0.119		0.255		-0.112
Total Deflection (in)	-0.291		0.631		-0.325

PROJECT INFORMATION:

UM Solar Decathalon

OPERATOR INFORMATION:

John Dumsick
Robert Silman Associates
1053 31st Street NW
Washington, DC 20007
Phone : (202) 333-6230
dumsick@dc.rsapc.com

S:\Projects_No Job Number\UMaryland Leafhouse\LVL Beam @ Range (100 PSF).sms

ROBERT SILMAN ASSOCIATES
STRUCTURAL ENGINEERS
1053 31st Street, NW Washington, DC 20007

IRC 2003 CODE ANALYSIS

R602.10.1

- DESIGNED COLLECTOR TO BE PROVIDED IF BRACING BEGINS > 12' FROM THE END OF BRACED WALL LINE.
  ↳ see header spec on plan & additional strapping

TABLE R602.10.1

METHOD 3 BRACING → WOOD STR. PANEL SHEATHING, 1/2"
~~16~~ 2x6 STUDS @ 16"

AMOUNT → WALLS @ EACH END & @ 25' o.c.
16% of WALL LENGTH IS TO BE SHEATHED

WALL PANEL LINE	TOTAL LENGTH	PROVIDED	%
A	18'6"	3'5" + 6'10"	55%
B	40'5"	8' + 4'9" + 5' + 6'6"	60%
C	18'6"	3'7" + 11'6"	81%
D	40'5"	8' + 5'	32%

MIN. WALL PANEL WIDTH → Table R602.10.5

8'-0" WALL	ADJ. WALL OPENING	ASPECT RATIO
48"	100%	2:1
32"	85%	3:1
24"	65%	4:1

ROBERT SILMAN ASSOCIATES
STRUCTURAL ENGINEERS
1053 31st Street, NW Washington, DC 20007

IRC 2003 Table R301.2(2)

WALL - ZONE 5, 100 ft² WIND AREA → -15.1, 12.4
90 mph, EXP. B 30' mean roof ht.

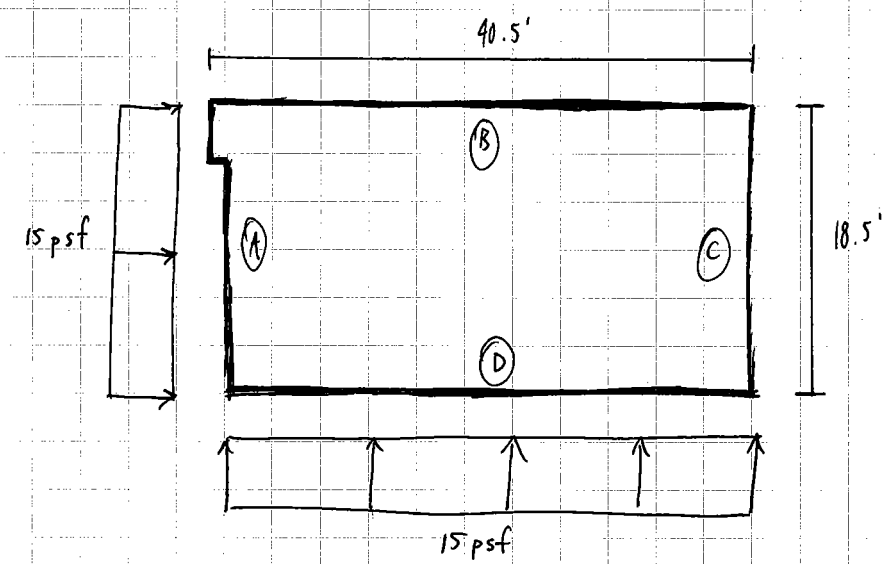

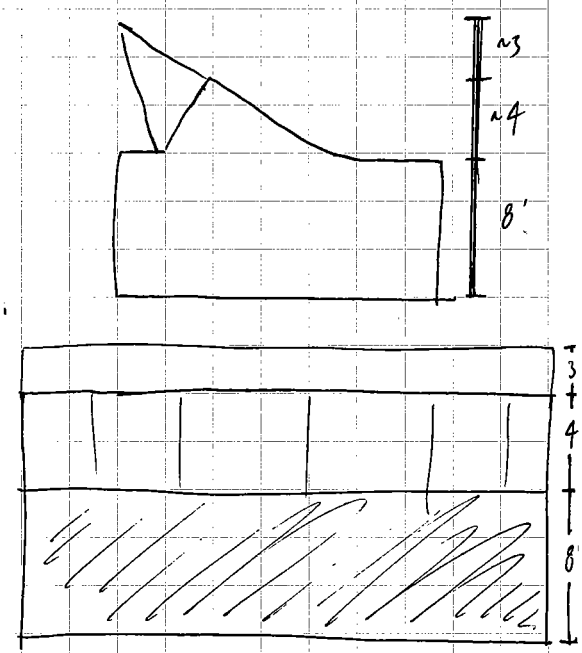

$(15\,psf)(9.25')(8') + 15'(\frac{1}{3}14')(4) = 1388\#$
↳ USE 1500 #

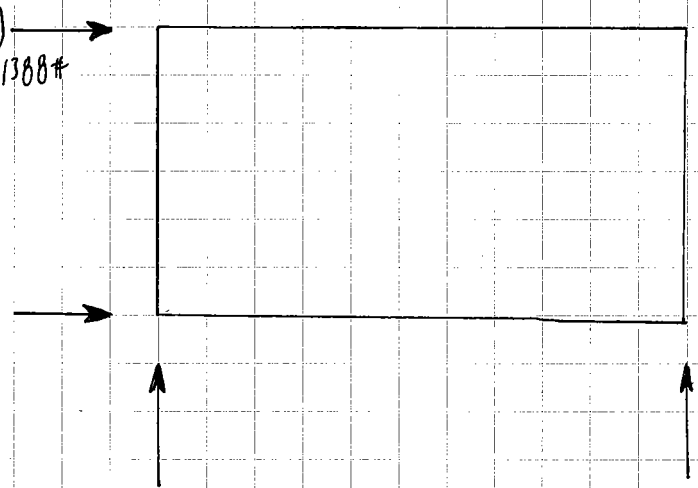

$15\,psf(21')(6) = 1890\#$
↳ USE 2000 #

Unit Shear Capacity: Wood-Frame Plywood Shear Walls (TABLE A.4.3A, p. 32)
NDS WIND & SEISMIC

$V_w = \frac{1065}{2} = 532$ plf (4" edge fastener spacing)

Req'd sheathing @ Walls A & C:

$L_{A,C} = \frac{P}{V_w} = \frac{2000\ \#\cdot ft}{532\ \#}$

$= 3.76$

$= 3'10"$

L Provided: $10'3" > 3'10"$ ✓

$\boxed{D' > D}$

Req'd sheathing @ Walls B & D:

$L_{B,D} = \frac{P}{V_w} = \frac{1500\ \#\cdot ft}{532\ \#}$

$= 2.82$

$= 2'10"$

L Provided $= 13'0" > 2'10"$ ✓

$\boxed{D' > D}$

- ASCE-7 (02) : SIMPLIFIED PROCEDURE

  - ENCLOSED
  - IMPORTANCE FACTOR : $I = 1.0$
  - EXPOSURE CATEGORY : C
  - HEIGHT & EXPOSURE COEFFICIENT : $\lambda = 1.21$ (FIG. 6-2)

$$p_s = \lambda I p_{s(30)}$$

- TRANSVERSE DIRECTION:

  - ROOF SLOPE = 20°
  - h : MEAN ROOF HEIGHT = $\frac{9'-9'' + 16'-9''}{2}$ → $h = 13.25''$
  - a : $0.1 \times 18' = 1.8'$
    $0.4h = 0.4 \times 13.25' = 5.3'$
    NOT LESS THAN 3' *CONTROLS → $2a = 6'$

WIND LOAD ON WALL:

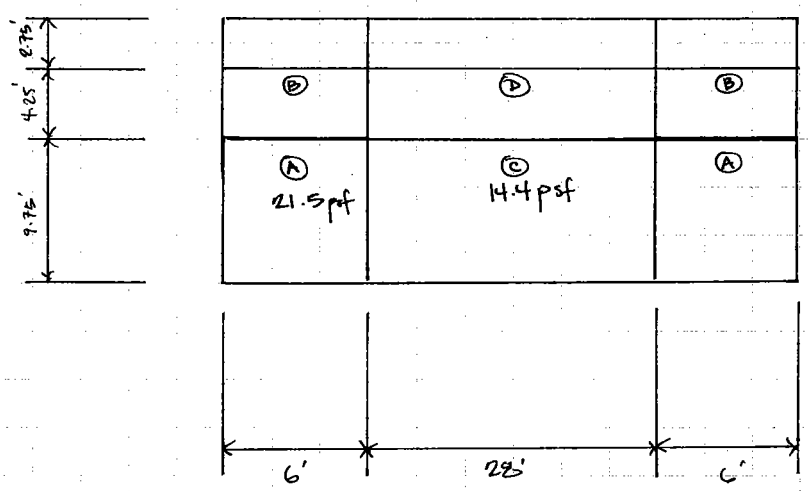

(A)	17.8 psf	× 1.21	=	21.5 psf	
(B)	-4.7 psf	× 1.21	=	-5.7 psf	(DO NOT USE FOR O.T.)
(C)	11.9 psf	× 1.21	=	14.4 psf	
(D)	-2.6 psf	× 1.21	=	-3.1 psf	(DO NOT USE FOR O.T.)

LOAD ON WALL (E.S.)

$$W_A = 21.5\,psf \times \frac{9.75'}{2} = 104.8\#/FT \times 6' = 629\#$$

$$W_C = 14.4\,psf \times \frac{9.75'}{2} = 70.2\#/FT \times \frac{28'}{2} = 983\#$$

1612# TOTAL

WIND LOAD ON ROOF (LOAD TOWARDS LOW SIDE)

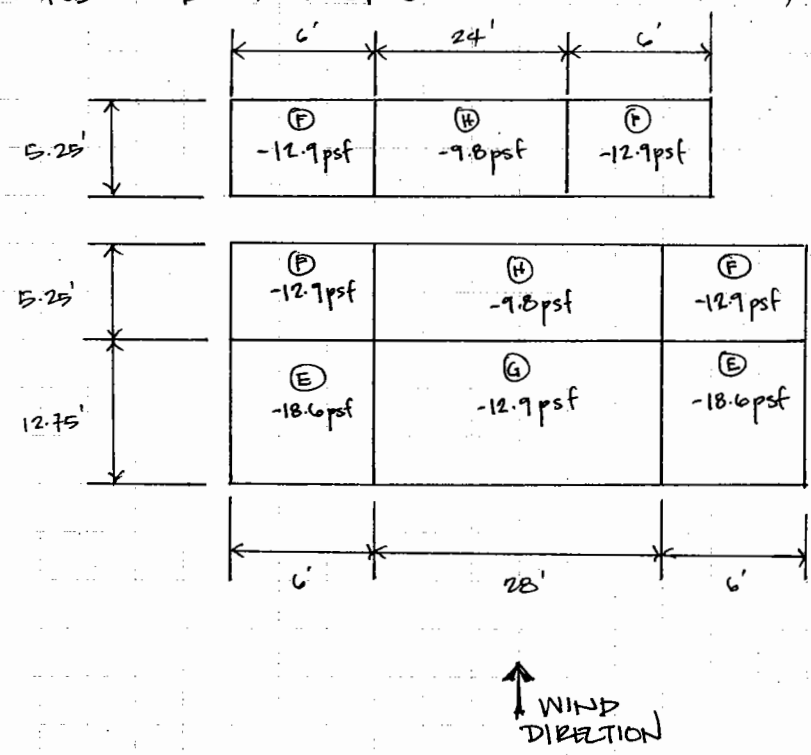

(PV OVERHANG)

* NOTE: FOR WIND UPLIFT, COUNT LOAD ONLY ONCE.

(LOW ROOF)

(E) -18.4 psf x 1.21 = -18.6 psf
(F) -10.7 psf x 1.21 = -12.9 psf
(G) -10.7 psf x 1.21 = -12.9 psf
(H) -8.1 psf x 1.21 = -9.8 psf

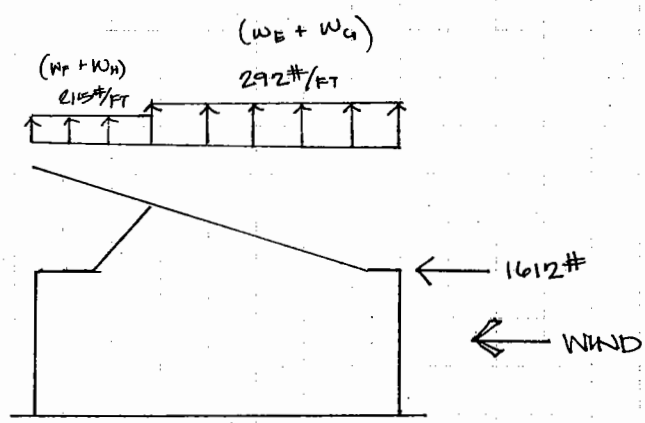

LOAD:

$w_E = -18.6 \text{ psf} \times 6' = -111.6 \#/\text{FT}$

$w_F = -12.9 \text{ psf} \times 6' = -77.4 \#/\text{FT}$

$w_G = -12.9 \text{ psf} \times \frac{28'}{2} = -180.6 \#/\text{FT}$

$w_H = -9.8 \text{ psf} \times \frac{28'}{2} = -137.2 \#/\text{FT}$

WIND LOAD ON ROOF (LOAD TOWARDS FRONT)

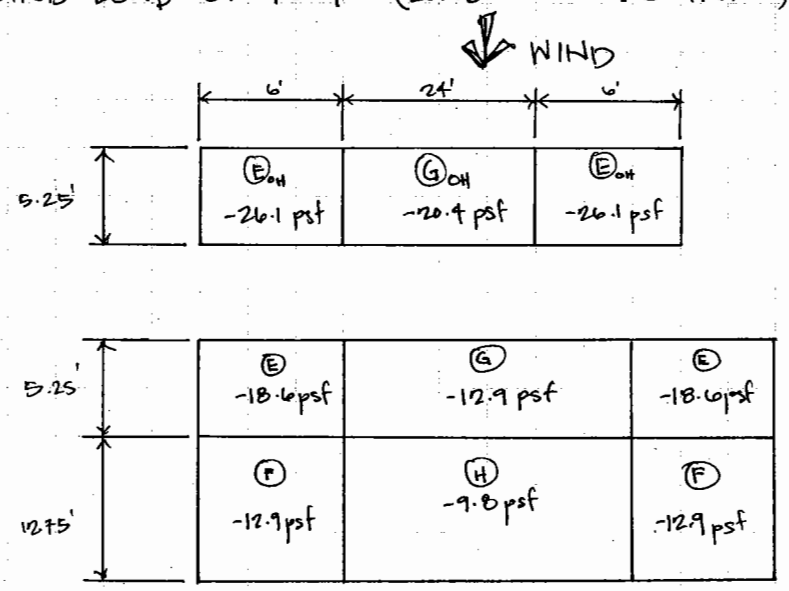

E	-15.4 psf	× 1.21	=	-18.6 psf
F	-10.7 psf	× 1.21	=	-12.9 psf
G	-10.7 psf	× 1.21	=	-12.9 psf
H	-8.1 psf	× 1.21	=	-9.8 psf
E OH	-21.6 psf	× 1.21	=	-26.1 psf
G OH	-16.9 psf	× 1.21	=	-20.4 psf

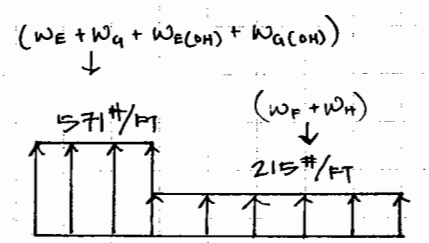

LOAD:

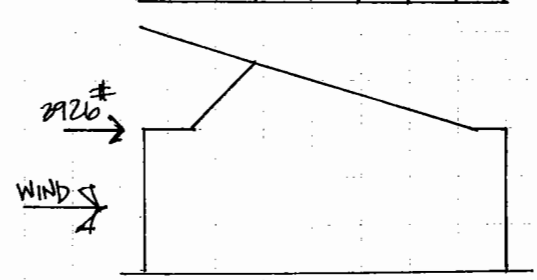

w_E = -18.6 psf × 6' = -111.6#/FT

w_F = -12.9 psf × 6' = -77.4#/FT

w_G = -12.9 psf × 28'/2 = -180.6#/FT

w_H = -9.8 psf × 28'/2 = -137.2#/FT

$w_{E(OH)}$ = -26.1 psf × 6' = -156.6#/FT

$w_{G(OH)}$ = -20.4 psf × 6' = -122.4#/FT

ROBERT SILMAN ASSOCIATES, PLLC
STRUCTURAL ENGINEERS
1053 31ST NW, WASHINGTON DC 20007

Wind Load on Short Wall

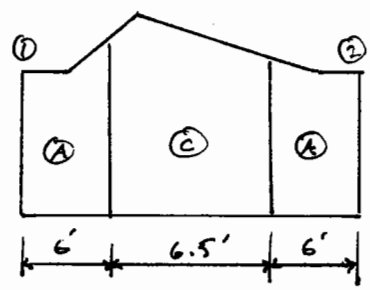

A 17.8 × 1.21 = 21.5 psf

B 11.9 × 1.21 = 14.4 psf

• From ASCE 7-02: Method 1

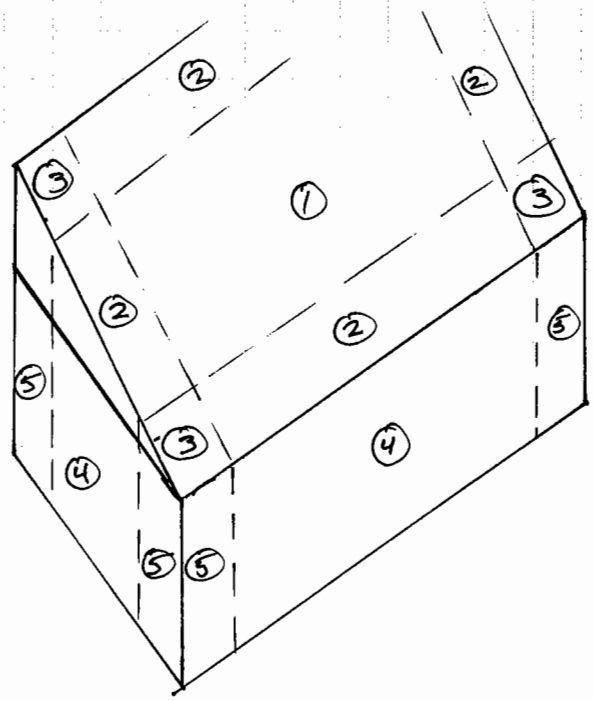

Threaded Rods @ Skylights:

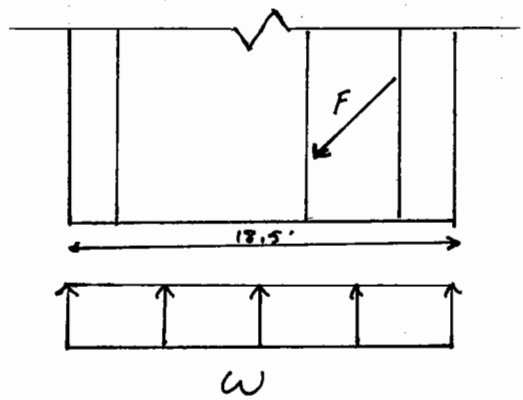

$w = \left(\frac{9.75'}{2} + 3'\right)(21.5\,psf) = 169\ plf$

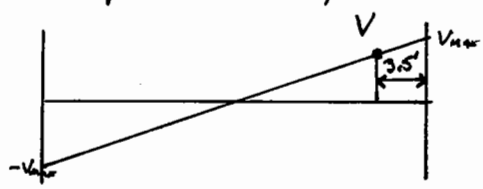

$V_{max} = 169(18.5)(.5) = 1563.3\#$

$V = (9.25 - 3.5)\frac{1563.3}{9.25} = 972\#$

$F = \frac{972}{4\cos(45)} = 344\#\ (T)$

$(3/16")(24\ ksi) = 4.5^k > .344^k$ OK

TJ-Beam® 6.25 Serial Number:
User: 2 3/1/2007 4:37:22 PM
Page 1 Engine Version: 6.25.71

2-Span Deck Girder

2 Pcs of 1 1/2" x 7 1/4" 1.4E Solid Sawn Spruce Pine Fir #2

THIS PRODUCT MEETS OR EXCEEDS THE SET DESIGN CONTROLS FOR THE APPLICATION AND LOADS LISTED

Overall Dimension: 12' 8 1/4"

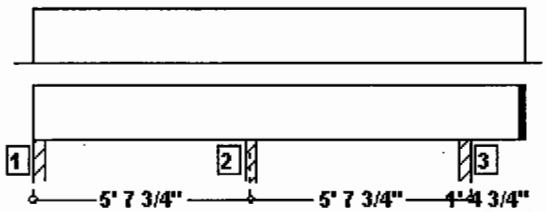

Product Diagram is Conceptual.

LOADS:

Analysis is for a Drop Beam Member. Tributary Load Width: 7' 11"
Primary Load Group - Residential - Living Areas (psf): 40.0 Live at 100 % duration, 12.0 Dead

SUPPORTS:

		Input Width	Bearing Length	Vertical Reactions (lbs) Live/Dead/Uplift/Total	Detail	Other
1	Wood column	3.50"	1.50"	829 / 226 / 0 / 1055	By Others	None
2	Wood column	3.50"	2.21"	2173 / 650 / 0 / 2823	By Others	None
3	Wood column	3.50"	1.50"	1336 / 385 / 0 / 1721	By Others	None

-See TJ SPECIFIER'S / BUILDERS GUIDE for detail(s): By Others

DESIGN CONTROLS:

	Maximum	Design	Control	Control	Location
Shear (lbs)	-1420	-1108	1958	Passed (57%)	Rt. end Span 1 under Floor ADJACENT span loading
Moment (Ft-Lbs)	-1538	-1538	2300	Passed (67%)	Bearing 2 under Floor ADJACENT span loading
Live Load Defl (in)		0.036	0.183	Passed (L/999+)	MID Span 1 under Floor ALTERNATE span loading
Total Load Defl (in)		0.043	0.274	Passed (L/999+)	MID Span 1 under Floor ALTERNATE span loading

-Deflection Criteria: STANDARD(LL:L/360,TL:L/240). Additional checks follow.
-Right Overhang:(LL:0.200", TL:0.200").
-Bracing(Lu): All compression edges (top and bottom) must be braced at 12' 8" o/c unless detailed otherwise. Proper attachment and positioning of lateral bracing is required to achieve member stability.
-The allowable shear stress (Fv) has not been increased due to the potential of splits, checks and shakes. See NDS for applicability of increase.
-Analysis assumes continuous member. Lap joints, splices and finger joints significantly reduce member performance and have not been considered.
-The load conditions considered in this design analysis include alternate and adjacent member pattern loading.

ADDITIONAL NOTES:

-IMPORTANT! The analysis presented is output from software developed by Trus Joist (TJ). TJ warrants the sizing of its products by this software will be accomplished in accordance with TJ product design criteria and code accepted design values. The specific product application, input design loads, and stated dimensions have been provided by the software user. This output has not been reviewed by a TJ Associate.
-Not all products are readily available. Check with your supplier or TJ technical representative for product availability.
-THIS ANALYSIS FOR iLevel PRODUCTS ONLY! PRODUCT SUBSTITUTION VOIDS THIS ANALYSIS. Solid sawn lumber analysis is in accordance with 2001 NDS methodology.
-Allowable Stress Design methodology was used for Building Code IBC analyzing the solid sawn lumber material listed above.
-Note: See TJ SPECIFIER'S / BUILDER'S GUIDES for multiple ply connection.

Operator Notes:

Æ

PROJECT INFORMATION:

Leafhouse

OPERATOR INFORMATION:

Adam E
1053 31st NW
Washington, DC 20007
Phone : 201-333-6230
AdamE@201-333-6230.id

S:\Projects_No Job Number\UMaryland Leafhouse\Typ. Deck Girder 2-span (100psf).sms

TJ-Beam® 6.25 Serial Number:
User: 2 3/1/2007 4:37:23 PM
Page 2 Engine Version: 6.25.71

2-Span Deck Girder

2 Pcs of 1 1/2" x 7 1/4" 1.4E Solid Sawn Spruce Pine Fir #2

THIS PRODUCT MEETS OR EXCEEDS THE SET DESIGN CONTROLS FOR THE APPLICATION AND LOADS LISTED

Load Group: Primary Load Group

	^ 5' 5.75"	^ 5' 6.00"	^ 1' 6.50"
Max. Vertical Reaction Total (lbs)	1055	2823	1721
Max. Vertical Reaction Live (lbs)	829	2173	1336
Required Bearing Length in	1.50(S)	2.21(S)	1.50(S)
Max. Unbraced Length (in)	152	152 152	152 152

Loading on all spans, LDF = 0.90 , 1.0 Dead

Shear at Support (lbs)	137	-261	240	-158	79
Max Shear at Support (lbs)	209	-335	315	-232	153
Member Reaction (lbs)	209	650		385	
Support Reaction (lbs)	226	650		385	
Moment (Ft-Lbs)	221	-345	153	-118	N/A

Loading on all spans, LDF = 1.00 , 1.0 Dead + 1.0 Floor

Shear at Support (lbs)	573	-1091	1005	-660	329
Max Shear at Support (lbs)	876	-1403	1317	-972	641
Member Reaction (lbs)	876	2720		1613	
Support Reaction (lbs)	946	2720		1613	
Moment (Ft-Lbs)	923	-1443	640	-494	N/A
Live Deflection (in)	0.022	0.013		-0.007	
Total Deflection (in)	0.029	0.017		-0.009	

ALTERNATE span loading on odd # spans, LDF = 1.00 , 1.0 Dead + 1.0 Floor

Shear at Support (lbs)	682	-982	262	-135	329
Max Shear at Support (lbs)	986	-1294	337	-210	641
Member Reaction (lbs)	986	1631		851	
Support Reaction (lbs)	1055	1631		851	
Moment (Ft-Lbs)	1168	-844	-273	-494	0
Live Deflection (in)	0.036	-0.021		0.026	
Total Deflection (in)	0.043	-0.018		0.024	

ALTERNATE span loading on even # spans, LDF = 1.00 , 1.0 Dead + 1.0 Floor

Shear at Support (lbs)	27	-370	982	-682	79
Max Shear at Support (lbs)	100	-445	1294	-994	153
Member Reaction (lbs)	100	1739		1147	
Support Reaction (lbs)	116	1739		1147	
Moment (Ft-Lbs)	50	-945	1069	-118	N/A
Live Deflection (in)	-0.015	0.034		-0.033	
Total Deflection (in)	-0.010	0.038		-0.035	

ADJACENT span loading over support # 2, LDF = 1.00, 1.0 Dead + 1.0 Floor

Shear at Support (lbs)	556	-1108	1090	-574	79
Max Shear at Support (lbs)	859	-1420	1402	-886	153
Member Reaction (lbs)	859	2823		1039	
Support Reaction (lbs)	929	2823		1039	
Moment (Ft-Lbs)	887	-1538	825	-118	N/A
Live Deflection (in)	0.020	0.020		-0.022	
Total Deflection (in)	0.027	0.025		-0.024	

PROJECT INFORMATION:

Leafhouse

OPERATOR INFORMATION:

Adam E
1053 31st NW
Washington, DC 20007
Phone : 201-333-6230
AdamE@201-333-6230.id

S:\Projects_No Job Number\UMaryland Leafhouse\Typ. Deck Girder 2-span (100psf).sms

TJ-Beam® 6.25 Serial Number:
User: 2 3/1/2007 4:37:23 PM
Page 3 Engine Version: 6.25.71

2-Span Deck Girder

2 Pcs of 1 1/2" x 7 1/4" 1.4E Solid Sawn Spruce Pine Fir #2

THIS PRODUCT MEETS OR EXCEEDS THE SET DESIGN CONTROLS FOR THE APPLICATION AND LOADS LISTED

ADJACENT span loading over support # 3, LDF = 1.00, 1.0 Dead + 1.0 Floor

Shear at Support (lbs)		45	-353	897	-767	329			
Max Shear at Support (lbs)		117	-428	1209	-1079	641			
Member Reaction (lbs)	117		1636		1721				
Support Reaction (lbs)	133		1636		1721				
Moment (Ft-Lbs)		69	-850	906	-494	N/A			
Live Deflection (in)		-0.013		0.027		-0.018			
Total Deflection (in)		-0.007		0.031		-0.020			

PROJECT INFORMATION:

Leafhouse

OPERATOR INFORMATION:

Adam E
1053 31st NW
Washington, DC 20007
Phone : 201-333-6230
AdamE@201-333-6230.id

S:\Projects_No Job Number\UMaryland Leafhouse\Typ. Deck Girder 2-span (100psf).sms

TJ-Beam® 6.25 Serial Number:
User: 2 3/1/2007 4:41:49 PM
Page 1 Engine Version: 6.25.71

3-Span Deck Beam

2 Pcs of 1 1/2" x 7 1/4" 1.4E Solid Sawn Spruce Pine Fir #2

THIS PRODUCT MEETS OR EXCEEDS THE SET DESIGN CONTROLS FOR THE APPLICATION AND LOADS LISTED

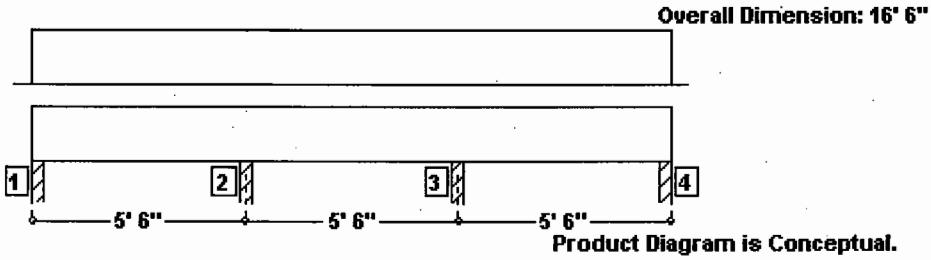

LOADS:

Analysis is for a Drop Beam Member. Tributary Load Width: 5' 6"
Primary Load Group - Residential - Living Areas (psf): 100.0 Live at 100 % duration, 15.0 Dead

SUPPORTS:

		Input Width	Bearing Length	Vertical Reactions (lbs) Live/Dead/Uplift/Total	Detail	Other
1	Wood column	3.50"	1.50"	1414 / 199 / 0 / 1613	By Others	None
2	Wood column	3.50"	3.20"	3565 / 518 / 0 / 4083	By Others	None
3	Wood column	3.50"	3.20"	3565 / 518 / 0 / 4083	By Others	None
4	Wood column	3.50"	1.50"	1414 / 199 / 0 / 1613	By Others	None

-See TJ SPECIFIER'S / BUILDERS GUIDE for detail(s): By Others

DESIGN CONTROLS:

	Maximum	Design	Control	Control	Location
Shear (lbs)	2097	1619	1958	Passed (83%)	Lt. end Span 3 under Floor ADJACENT span loading
Moment (Ft-Lbs)	-2125	-2125	2300	Passed (92%)	Bearing 3 under Floor ADJACENT span loading
Live Load Defl (in)		0.057	0.178	Passed (L/999+)	MID Span 1 under Floor ALTERNATE span loading
Total Load Defl (in)		0.064	0.267	Passed (L/999+)	MID Span 1 under Floor ALTERNATE span loading

-Deflection Criteria: STANDARD(LL:L/360,TL:L/240).
-Bracing(Lu): All compression edges (top and bottom) must be braced at 16' 6" o/c unless detailed otherwise. Proper attachment and positioning of lateral bracing is required to achieve member stability.
-The allowable shear stress (Fv) has not been increased due to the potential of splits, checks and shakes. See NDS for applicability of increase.
-Analysis assumes continuous member. Lap joints, splices and finger joints significantly reduce member performance and have not been considered.
-The load conditions considered in this design analysis include alternate and adjacent member pattern loading.

ADDITIONAL NOTES:

-IMPORTANT! The analysis presented is output from software developed by Trus Joist (TJ). TJ warrants the sizing of its products by this software will be accomplished in accordance with TJ product design criteria and code accepted design values. The specific product application, input design loads, and stated dimensions have been provided by the software user. This output has not been reviewed by a TJ Associate.
-Not all products are readily available. Check with your supplier or TJ technical representative for product availability.
-THIS ANALYSIS FOR iLevel PRODUCTS ONLY! PRODUCT SUBSTITUTION VOIDS THIS ANALYSIS. Solid sawn lumber analysis is in accordance with 2001 NDS methodology.
-Allowable Stress Design methodology was used for Building Code IBC analyzing the solid sawn lumber material listed above.
-Note: See TJ SPECIFIER'S / BUILDER'S GUIDES for multiple ply connection.

Operator Notes:

Æ

PROJECT INFORMATION:

Leafhouse

OPERATOR INFORMATION:

Adam E
1053 31st NW
Washington, DC 20007
Phone : 201-333-6230
AdamE@201-333-6230.id

S:\Projects_No Job Number\UMaryland Leafhouse\Typ. Deck Girder 3-span (100psf).sms

TJ-Beam® 6.25 Serial Number:
User: 2 3/1/2007 4:41:50 PM
Page 2 Engine Version: 6.25.71

3-Span Deck Beam

2 Pcs of 1 1/2" x 7 1/4" 1.4E Solid Sawn Spruce Pine Fir #2

THIS PRODUCT MEETS OR EXCEEDS THE SET DESIGN CONTROLS FOR THE APPLICATION AND LOADS LISTED

Load Group: Primary Load Group

	^ 5' 4.00" ^	5' 6.00" ^	5' 4.00" ^
Max. Vertical Reaction Total (lbs)	1613 4083	4083	1613
Max. Vertical Reaction Live (lbs)	1414 3565	3565	1414
Required Bearing Length in	1.50(S) 3.20(S)	3.20(S)	1.50(S)
Max. Unbraced Length (in)	198 198	198 198	198

Loading on all spans, LDF = 0.90 , 1.0 Dead

Shear at Support (lbs)	121	-214	174	-174	214	-121
Max Shear at Support (lbs)	184	-279	239	-239	279	-184
Member Reaction (lbs)	184	518		518		184
Support Reaction (lbs)	199	518		518		199
Moment (Ft-Lbs)	195	-254	74	-254	195	

Loading on all spans, LDF = 1.00 , 1.0 Dead + 1.0 Floor

Shear at Support (lbs)	884	-1570	1274	-1274	1570	-884
Max Shear at Support (lbs)	1349	-2048	1751	-1751	2048	-1349
Member Reaction (lbs)	1349	3799		3799		1349
Support Reaction (lbs)	1455	3799		3799		1455
Moment (Ft-Lbs)	1428	-1864	544	-1864	1428	
Live Deflection (in)	0.039	0.006		0.039		
Total Deflection (in)	0.045	0.007		0.045		

ALTERNATE span loading on odd # spans, LDF = 1.00 , 1.0 Dead + 1.0 Floor

Shear at Support (lbs)	1042	-1412	174	-174	1412	-1042
Max Shear at Support (lbs)	1507	-1890	239	-239	1890	-1507
Member Reaction (lbs)	1507	2129		2129		1507
Support Reaction (lbs)	1613	2129		2129		1613
Moment (Ft-Lbs)	1782	-1022	-694	-1022	1782	
Live Deflection (in)	0.057	-0.038		0.057		
Total Deflection (in)	0.064	-0.037		0.064		

ALTERNATE span loading on even # spans, LDF = 1.00 , 1.0 Dead + 1.0 Floor

Shear at Support (lbs)	-37	-372	1274	-1274	372	37
Max Shear at Support (lbs)	26	-437	1751	-1751	437	-26
Member Reaction (lbs)	26	2189		2189		26
Support Reaction (lbs)	40	2189		2189		40
Moment (Ft-Lbs)	4	-1096	1312	-1096	4	
Live Deflection (in)	-0.020	0.044		-0.020		
Total Deflection (in)	-0.015	0.045		-0.015		

ADJACENT span loading over support # 2, LDF = 1.00, 1.0 Dead + 1.0 Floor

Shear at Support (lbs)	835	-1619	1508	-1039	323	-12
Max Shear at Support (lbs)	1300	-2097	1986	-1517	388	-75
Member Reaction (lbs)	1300	4083		1905		75
Support Reaction (lbs)	1406	4083		1905		89
Moment (Ft-Lbs)	1326	-2125	971	-835	32	
Live Deflection (in)	0.033	0.025		-0.014		
Total Deflection (in)	0.039	0.026		-0.009		

PROJECT INFORMATION:

Leafhouse

OPERATOR INFORMATION:

Adam E
1053 31st NW
Washington, DC 20007
Phone : 201-333-6230
AdamE@201-333-6230.id

S:\Projects_No Job Number\UMaryland Leafhouse\Typ. Deck Girder 3-span (100psf).sms

TJ-Beam® 6.25 Serial Number:
User: 2 3/1/2007 4:41:50 PM
Page 3 Engine Version: 6.25.71

3-Span Deck Beam

2 Pcs of 1 1/2" x 7 1/4" 1.4E Solid Sawn Spruce Pine Fir #2

THIS PRODUCT MEETS OR EXCEEDS THE SET DESIGN CONTROLS FOR THE APPLICATION AND LOADS LISTED

ADJACENT span loading over support # 3, LDF = 1.00, 1.0 Dead + 1.0 Floor

Shear at Support (lbs)		12	-323	1039	-1508	1619	-835			
Max Shear at Support (lbs)		75	-388	1517	-1986	2097	-1300			
Member Reaction (lbs)	75		1905		4083		1300			
Support Reaction (lbs)	89		1905		4083		1406			
Moment (Ft-Lbs)		32	-835	971	-2125	1326				
Live Deflection (in)		-0.014		0.025		0.033				
Total Deflection (in)		-0.009		0.026		0.039				

PROJECT INFORMATION:

Leafhouse

OPERATOR INFORMATION:

Adam E
1053 31st NW
Washington, DC 20007
Phone : 201-333-6230
AdamE@201-333-6230.id

S:\Projects_No Job Number\UMaryland Leafhouse\Typ. Deck Girder 3-span (100psf).sms

E1.05 Cable and Conduit Calculations

Run 1 - PV panel to Combiner box (Sanyo HIP-205BA3 (PV panel) to combiner box)

Each panel has a short circuit current (I_{SC}) of 3.84 A; two panels are combined in series and subsequently connected to one combiner box breaker
Cable quantity: 34 current-carrying conductors + 3 grounding cables
Oversized panel current correction factor is 1.56
Corrected max current: 3.84 A * 1.56= 5.99 A

Cables are sunlight-resistant, RHH/RHW/USE-2 Multiple Contact (MC) copper, #10 AWG, 90 degrees C
Allowable ampacity of this cable is 40 A (NEC 2005 Table 310.16)
Correction factor for 71-80 degrees C ambient temperature is 0.41
Corrected allowable ampacity: 40 A * 0.41 = 16.4 A
Correction factor for 31-40 current carrying conductors is 0.4 (NEC 2005 Table 310.15(B)(2)(a))
Corrected allowable ampacity: 16.4 A * 0.40 = 6.56 A

Maximum current, 5.99 A, is less than corrected allowable ampacity of 6.56 A.

PSPV combiner breakers are 8A which is the next available size above 6 A.

Conduit Sizing:
#10 AWG RHH/RHW cable area = 0.0333 in^2 (NEC 2005 Chapter 9, Table 5)
Wire Fill: 0.0333 in^2 * 34 = 1.13 in^2
#10 AWG THHN/THWN grounding cable is 0.0211 $in.^2$
Wire Fill: 0.0211 in^2 * 3 = 0.0633 in^2
Total Wire Fill: 1.13 in^2 + 0.0633 in^2 = 1.19 in^2
2.5 in electrical metallic tubing (EMT) is permitted for conduit (NEC 2005 Chapter 9, Table 4, Article 358: 2.343 in^2 with 40% fill over 2 wires)

3 in EMT will be used for conduit

Run 2 - PV Combiner 1, Circuit A & Circuit B to GFCI breaker (12 PV Panels)

GFCI breaker (OBB-GFP-80D-125VDC-PNL) located in DC Disconnect (FW1000-DC) in outdoor enclosure
Cable quantity(per circuit): 2 current-carrying conductors + 1 grounding cable
Each circuit: 2 Panels in series, 6 pairs in parallel, each with an I_{SC} = 3.84 A
6 * 3.84A = 23.04 A
Oversized output current correction factor is 1.56
Corrected max current: 23.04 A * 1.56 = 35.94 A

Cables are THHN/THWN-2 #6 AWG, 90 degrees C
Allowable ampacity of this cable is 75 A (NEC 2005 Table 310.16)
Correction factor for 56-60 degrees C ambient temperature is 0.71
Corrected allowable ampacity: 75 A * 0.71 = 53.25 A

Maximum current, 35.94 A, is less than corrected allowable ampacity of 53.25 A

Conduit Sizing (1 conduit per circuit):
#6 AWG THHN/THWN cable area = 0.0726 in^2 (NEC 2005 Chapter 9 Table 5)
Wire Fill: 0.0726 in^2 * 2 = 0.1452 in^2
#10 AWG THHN/THWN grounding cable is 0.0211 $in.^2$
Total wire fill: 0.1452 in^2 + 0.0211 in^2 = 0.1663 in^2
0.75 in liquidtight flexible metallic conduit is permitted (NEC 2005 Chapter 9, Table 4, Article 350: 0.216 in^2 with 40% fill over 2 wires)

0.75 in liquidtight flexible metallic conduit will be used for each circuit

Run 2 - PV Combiner 2 to GFCI breaker (10 PV Panels)

GFCI breaker (OBB-GFP-80D-125VDC-PNL) located in DC Disconnect (FW1000-DC) in outdoor enclosure
Cable quantity: 2 current-carrying conductors + 1 grounding cable
2 Panels in series, 5 pairs in parallel, each with an I_{SC} = 3.84 A
5 * 3.84A = 19.2 A
Oversized output current correction factor is 1.56
Corrected max current: 19.2 A * 1.56 = 29.95 A

Cables are THHN/THWN-2 #6 AWG, 90 degrees C
Allowable ampacity of this cable is 75 A (NEC 2005 Table 310.16)
Correction factor for 56-60 degrees C ambient temperature is 0.71
Corrected allowable ampacity: 75 A * 0.71 = 53.25 A

Maximum current, 29.95 A, is less than corrected allowable ampacity of 53.25 A

Conduit Sizing:
#6 AWG THHN/THWN cable area = 0.0726 in^2 (NEC 2005 Chapter 9 Table 5)
Wire Fill: 0.0726 in^2 * 2 = 0.1452 in^2
#10 AWG THHN/THWN grounding cable is 0.0211 $in.^2$
Total Wire Fill: 0.1452 in^2 + 0.0211 in^2 = 0.1663 in^2
0.75 in liquidtight flexible metallic conduit is permitted (NEC 2005 Chapter 9, Table 4, Article 350: 0.216 in^2 with 40% fill over 2 wires)

0.75 in liquidtight flexible metallic conduit will be used

Run 3 – GFCI breaker to Charge Controller

SEE RUN 2 – CURRENT AND CABLES ARE IDENTICAL FOR EACH RESPECTIVE CIRCUIT
Cables are THHN/THWN #6 AWG, 90 degrees C

Run 4 – Charge Controller to DC Disconnect (MX60 to FW1000-DC)

"The output [of the MX60 charge controller] is current limited to 60 amps." (Outback MX60 Manual)
Oversize output current correction factor is 1.25
Corrected max current: 60 A * 1.25 = 75 A

Cables are THHN/THWN-2 #2 AWG, 90 degrees C
Allowable ampacity of this cable is 130 A (NEC 2005 Table 310.16)
Correction factor for 56-60 degrees C ambient temperature is 0.71
Corrected allowable ampacity: 130 A * 0.71 = 92.3 A

Maximum current, 75 A, is less than corrected allowable ampacity, 92.3 A

Run 5 – DC Disconnect to Inverters (FW1000-DC to VFX3648)

Max inverter input current is the inverter current rating when the inverter is producing the rated power at the lowest input voltage. (NEC 2005, 690.8(A)(4))
Outback VFX3648 P_{max} = 3600 W (Outback VFX3648 manual)
Minimum inverter input voltage is 44 V, below which the inverter will stop operating
3600 W / 44V = 81.2 A (From P=IV)

Oversize output current correction factor is 1.25
Corrected max current: 81.2 A *1.25 = 101.5 A

Cables are THW/MTW 4/0 AWG, 75 degrees C

Allowable ampacity of this cable is 230 A (NEC 2005 Table 310.16)
Correction factor for 56-60 degrees C ambient temperature is 0.58
Corrected allowable ampacity: 230 A * 0.58 = 133.4 A

Maximum current, 101.5 A, is less than corrected allowable ampacity, 133.4 A

<u>Run 6 – DC Disconnect to Batteries</u> (FW-1000DC to MK S8D SLD G LTP batteries)

Cable Quantity:
1 pos + 1 neg to each of 4 parallel strings = 8 cables total (4 pos + 4 neg)
Each string = 3 banks of 4 batteries in series connected in parallel

Corrected max current from Run 5 is 101.5 A (maximum current drawn from Run 6)
Total current: 4 inverters * 101.5 A = 406 A

406 A / 4 identical parallel battery banks = 101.5 A per battery bank

Cables are THW/MTW #4/0 AWG, 75 degrees C
Allowable ampacity of this cable is 230 A (NEC 2005 Table 310.16)
Correction factor for 51-55 degrees C ambient temperature is 0.67
Corrected allowable ampacity: 230 A * 0.67 = 154.1 A
Correction factor for 7-9 current carrying conductors is 0.7 (NEC 2005 Table 310.15(B)(2)(a))
Corrected allowable ampacity: 154.1 A * 0.7 = 107.9 A

Maximum current, 101.5 A, is less than corrected allowable ampacity, 107.9 A

<u>Conduit Sizing</u>:

4/0 AWG THW/MTW cable area = 0.3718 in^2 (NEC 2005 Chapter 9 Table 5)
Wire Fill: 0.3718 in^2 * 8 = 2.9744 in^2
3.5 in Schedule 40 PVC is permitted for conduit (NEC 2005 Chapter 9, Table 4, Article 352: 3.895 in^2 with 40% fill over 2 wires)

3.5 in Schedule 40 PVC will be used for conduit

<u>Run 7 – Inverters to AC Disconnect</u> (VFX3648 to FW1000-AC)

Max continuous AC output from inverter is 30 A (Outback VFX3648 manual)
Oversize output current correction factor is 1.25
Corrected max current: 30 A * 1.25 = 37.5 A

Cables are THHN/THWN-2 #6 AWG, 90 degrees C
Allowable ampacity of this cable is 75 A(NEC 2005 Table 310.16)
Correction factor for 56-60 degrees C ambient temperature is 0.71
Corrected allowable ampacity: 75 A * 0.71 = 53.3 A

Maximum current, 37.5 A, is less than corrected allowable ampacity, 53.3 A

Run 8 – AC Disconnect to AC Load Center

Max AC output from VFX3648 inverter is 30 A
Oversized output current correction factor is 1.25
30 A * 1.25 = 37.5 A

2 sets of 2 inverters in parallel
Each parallel set produces: 37.5 A * 2 = 75 A @120 VAC
Both parallel sets together provide 240 VAC

Cables are #2/0-3 SE cable
Allowable ampacity of this cable is 200 A for each leg (NEC 2005 Table 310.15(B)(6))

Maximum current, 75 A, is less than corrected allowable ampacity, 200 A

SECTION 01100

SUMMARY

PART 1 GENERAL

1.1 SUMMARY

A. Project Identification: LeafHouse (College Park, MD).

B. Project Summary: ((To construct a solar-powered residential home of approximately 800 square feet)).

C. Particular Project Requirements: None

D. Permits and Fees: Apply for, obtain, and pay for permits, fees, and utility company backcharges required to perform the work. Submit copies to Architect.

E. Codes: Comply with applicable codes and regulations of authorities having jurisdiction. Submit copies of inspection reports, notices and similar communications to Architect.

F. Dimensions: Verify dimensions indicated on drawings with field dimensions before fabrication or ordering of materials. Do not scale drawings.

G. Existing Conditions: Notify Architect of existing conditions differing from those indicated on the drawings. Do not remove or alter structural components without prior written approval.

H. Coordination:
1. Coordinate the work of all trades.
2. Prepare coordination drawings for areas above ceilings where close tolerances are required between building elements and mechanical and electrical work.
3. Verify location of utilities and existing conditions.

I. Installation Requirements, General:
1. Inspect substrates and report unsatisfactory conditions in writing.
2. Do not proceed until unsatisfactory conditions have been corrected.
3. Take field measurements prior to fabrication where practical. Form to required shapes and sizes with true edges, lines and angles. Provide inserts and templates as needed for work of other trades.
4. Install materials in exact accordance with manufacturer's instructions and approved submittals.
5. Install materials in proper relation with adjacent construction and with proper appearance.
6. Restore units damaged during installation. Replace units which cannot be restored at no additional expense to the Owner.
7. Refer to additional installation requirements and tolerances specified under individual specification sections.

J. Limit of Use: Limit use of work as indicated. Keep driveways and entrances clear.

K. Existing Construction: Maintain existing building in a weathertight condition. Repair damage caused by construction operations. Protect building and its occupants.

L. Definitions:
   1. Provide: Furnish and install, complete with all necessary accessories, ready for intended use. Pay for all related costs.
   2. Approved: Acceptance of item submitted for approval. Not a limitation or release for compliance with the Contract Documents or regulatory requirements. Refer to limitations of 'Approved' in General and Supplementary Conditions.
   3. Match Existing: Match existing as acceptable to the Owner.

M. Intent: Drawings and specifications are intended to provide the basis for proper completion of the work suitable for the intended use of the Owner. Anything not expressly set forth but which is reasonable implied or necessary for proper performance of the project shall be included.

N. Writing Style: Specifications are written in the imperative mode. Except where specifically intended otherwise, the subject of all imperative statements is the Contractor. For example, 'Provide tile' means 'Contractor shall provide tile.'

PART 2 EXECUTION - Not Applicable To This Section

END OF SECTION

SPECIFICATION SECTION

DIVISION 2 – SITE CONSTRUCTION

Section 02900 Plants

Final Plant List for NREL Submission

Latin	Common	Qty	Size	Height
Trees				
Acer rubrum 'October Glory'	October Glory Maple	1	2.5 - 3" caliper	18' max
Shrubs				
Aronia arbutifolia	Red Chokeberry	2	3 gallon	2-3'
Cornus sericea	redosier dogwood	2	3 gallon	2-3'
Itea virginica	sweetspire	2	3 gallon	2-3'
Morella pennsylvanica	Northern Bayberry	2	3 gallon	2-3'
Grasses				
Andropogon virginicus	Broom Sedge	10	1 gallon	2-3'
Chasmanthium latifolium	Northern Sea Oats	10	1 gallon	2-3'
Muhlenbergia capillaris	Pink Muhly Grass	20	1 gallon	1-2'
Panicum virgatum	Switchgrass	20	1 gallon	2-4'
Perennials				
Aster oblongifolius 'Raydon's Favorite'	Aromatic Aster	20	1 gallon	2-3'
Chelone glabra	White Turtlehead	10	1 gallon	2-3'
Coreopsis 'Limerock Ruby'	Tickseed	10	1 gallon	2-3'
Phlox paniculata	Field phlox	10	1 gallon	6-10"
Rudbeckia fulgida var. fulgida	Black-eyed Susan	20	1 gallon	2-3'
Groundcover/Vines				
List forthcoming from Green roof plants				
Parthenocissus quinquefolia	Virginia creeper	?	1 gallon	2-10'
Thymus serpyllum	Creeping Thyme	40	1 quart	12"
Annuals				
Chrysanthemums				

SPECIFICATION SECTION

DIVISION 3 - CONCRETE

Section 03410 Plant-Precast Structural Concrete

Décor - Dek-Block+

4 WAY DEK-BLOCK™+

build the deck of your dreams in just one day!

Tools Needed

• shovel • level • tape measure • 1/4" dowel • drill with screwdriver bit • saw (required only when using 4x4's to level or elevate deck, or for adding handrail posts)

Choose the 4 WAY Dek-Block+™ deck plan that's right for you:

8' x 8' • 8' x 10' • 8' x 12' • 8' x 16' • 8' x 20'

Materials	8'x8'	8'x10'	8'x12'	8'x16'	8'x20'
4 way dek-block+ piers	12	12	12	20	20
8' 2x6 treated lumber	24	24	28	44	45
10' 2x6 treated lumber	-	4	-	-	8
12' 2x6 treated lumber	-	-	4	-	-
8' 4x4 treated lumber	2	2	2	4	4
2-1/2" galv. deck screws	3lbs	4lbs	5lbs	7lbs	7lbs
construction adhesive-tubes	1	1	1	2	2
stain or sealer, gallons	1	1	1	2	2
metal truss plates	-	-	-	8	8
1/4" dowel	1	1	1	1	1

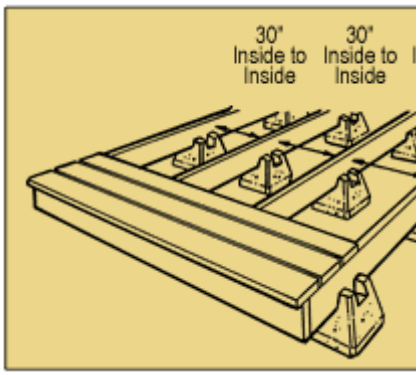

10' x 10' • 10' x 12' • 10' x 16' • 10' x 20'

Materials	10'x10'	10'x12'	10'x16'	10'x20'
4 way dek-block+ piers	15	15	25	25
8' 2x6 treated lumber	-	-	10	-
10' 2x6 treated lumber	29	28	36	55
12' 2x6 treated lumber	-	5	-	-
8' 4x4 treated lumber	3	3	5	5
2-1/2" galv. deck screws	5lbs	5lbs	8lbs	8lbs
construction adhesive-tubes	1	1	1	2
stain or sealer, gallons	1	1	1	2
metal truss plates	-	-	10	10
1/4" dowel	1	1	1	1

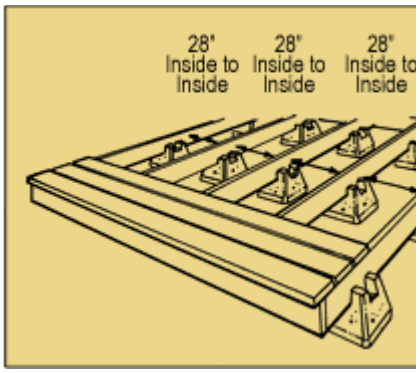

12' x 12' • 12' x 16' • 12' x 20'

Materials	12'x12'	12'x16'	12'x20'
4 way dek-block+ piers	18	30	30
8' 2x6 treated lumber	-	12	-
10' 2x6 treated lumber	-	-	12

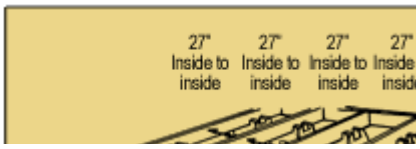

12' 2x6 treated lumber	34	34	45
8' 4x4 treated lumber	3	5	5
2-1/2" galv. deck screws	6lbs	8lbs	9lbs
construction adhesive-tubes	2	2	3
stain or sealer, gallons	2	2	3
metal truss plates	-	12	12
1/4" dowel	1	1	1

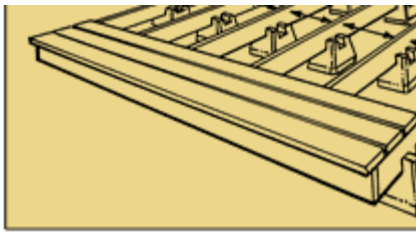

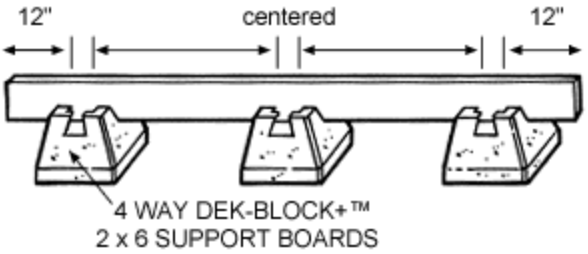

How to space 4 WAY Dek-Block+™
With 8', 10' and 12' support boards:
Use three 4 WAY Dek-Block+™ piers per 2
support board as shown.

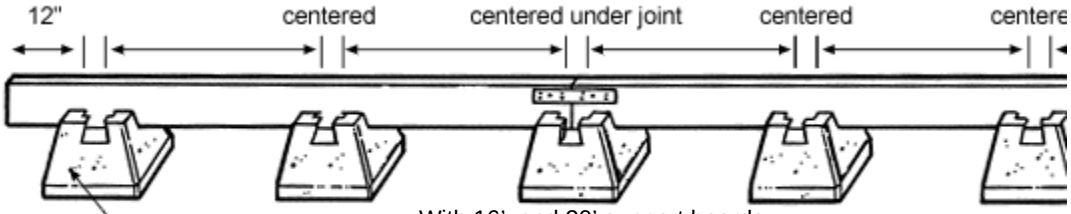

With 16', and 20' support boards:
Use five 4 Way Dek-Block+™ piers per 2 x 6 support board a
shown. Make sure that center pier is directly under center joir
support board.

Build the 4 WAY Dek-Block+™ deck of your dreams in 4 easy steps

Step 1: Position and level 4 Way Dek-Block+™ piers. Use a 2 x 6 support board and the spacing measurements shown in the plans for the deck of your choice. Adjust 4 Way Dek-Block+™ piers until the top edge of the 2 x 6 support board is level. (NOTE: For 16 and 20-foot deck lengths, connect two 8 or 10-foot support boards end-to-end by nailing a perforated metal truss plate to both sides of the joint as shown. Make sure that a 4 Way Dek-Block+™ pier is positioned directly under the joint).

Step 2: Position and level all 2 x 6 support boards. Make sure that the top edges of all the support boards are level with each other.

Step 3: Square up 2 x 6 deck support boards and add 2 x 6 boards to finish both open ends.

To square up support boards, measure diago
form ends of outside support boards (corner t
corner). Adjust position of outside support bo
until diagonal distance between opposite corr
EQUAL. Screw a 2 x 6 board across one ope
adjusting all inside support boards so they bu
flush against the finish board. Screw the secc
finish board across the other open end.

Step 4: Add 2 x 6 decking surface. Place AL
decking on the deck before screwing. Space
decking board 1/4" apart on support boards u
1/4" dowel as a guide. Adjust as necessary tc
ensure that the decking boards overlap the fir
boards on each end by the same amount. Wh
decking is in position, remove each board an
apply a bead of construction adhesive to the
edge of the support board beneath it. Put boa
back in place and secure with 2-1/2" deck scr
(two screws per support board).

How to add a handrail

Step 1
Position centers of outer 2 x 2 boards 5" in from each end of 2 x 6 handrail board, and attach with one 2-1/2" decking screw at the top. Attach bottom ends of 2 x 2's to deck support or facing board with two decking screws, using a

Step 2
Position remaining 2 x 2 boards on 5" centers,
with two 2-1/2" decking screws top and bottom.

level to ensure that 2 x 2's are plumb and that 2 x 6 handrail board is level with deck. Secure top of each 2 x 2 with a second screw.

Materials (per Side)	8'	10'	12'	16'	20'
8' 2x6 treated lumber	1	-	-	2	-
10' 2x6 treated lumber	-	2	-	-	2
12' 2x6 treated lumber	-	-	1	-	-
42 inch 2x2 treated lumber - beveled at both ends	20	25	30	40	49
2-1/2" galv. deck screws	1lbs	1lbs	2lbs	2lbs	2lbs

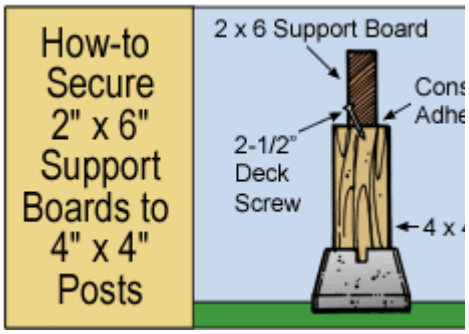

how to level or elevate your 4 WAYDek-Block+™ deck

Step 1
Position first row of 4 Way Dek-Block+™ piers and 4 x 4 posts.

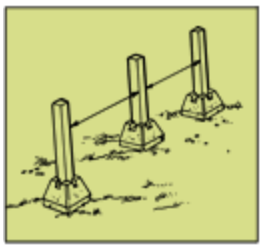

Level the top of each 4 Way Dek-Block+™ pier, then insert 4 x 4 posts. Get the inside measurement for the distance between posts from the plan for the deck size you've chosen.

Step 2
Determine height of deck with 2 x 6 leveler.

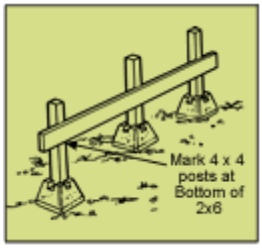

Mark desired height of completed deck on 4 x 4 post positioned on highest ground. Mark post 1-3/4" below original mark to allow for thickness of decking. Position top edge of 2 x 6 leveler flush with second mark and nail to post. Place spirit level on top edge of leveler, nailing other end to opposite 4 x 4 post when level. Mark all posts clearly along bottom edge of leveler.

Step 3
Cut 4 x 4 posts to length and position 2 x 6 support board.

Remove 4 x 4 posts from 4 Way Dek-Block+™ piers. Cut to length at marks made in Step 2. Reinsert posts in piers. Center 2 x 6 support board along top of post

Step 4
Position remaining 2 x 6 support boards, square up, and secure to 4 x 4 posts.

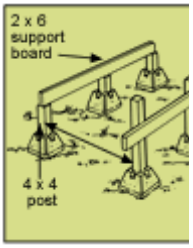

Position remaining 2 x 6 support boards by repeating Steps 1, 2 & 3. Distance between posts is 2" less than the distance between support boards shown on the plan for your deck. Squ by adjusting outside support boards until diag distance between opposite corners is EQUAL ends of all support boards are flush. Secure support boards to posts as shown.

What is the Dek-Block® Pier?

Dek-Block® piers are solid, pre-formed concrete foundation blocks designed specifically for the Floating Foundation Deck System.

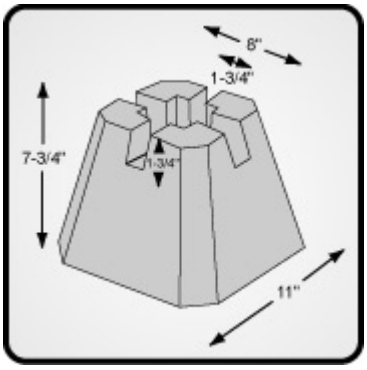

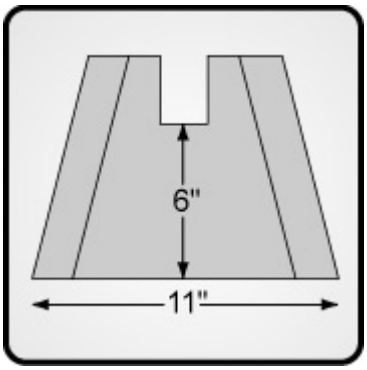

Dek-Block® Pier Specs

- 1-3/4" wide x 1-3/4" deep slot accepts 2" thick (1-1/2" net) lumber horizontally
- 3-3/4" square x 1-3/4" deep socket accepts 4x4 (3-1/2" x 3-1/2" net) posts vertically
- 42 lbs per block average. Weight varies slightly by region
- 6" distance from bottom of block to bottom of lumber slot
- Block porosity wicks moisture from slot/lumber to ground.
- Each block is manufactured from 5,000 psi concrete to ensure the greatest strength and durability.

SPECIFICATION SECTION

DIVISION 5 - METALS

Steel Wide Flange I-Beams

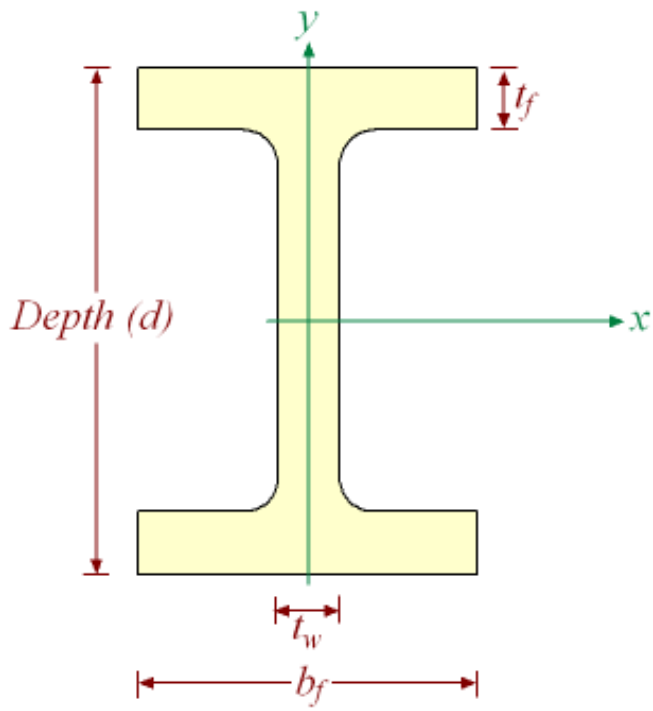

in × lbf/ft	Area (in²)	d (in)	b_f (in)	t_f (in)	t_w (in)	Ixx (in⁴)	Zxx (in³)	kxx (in)	Iyy (in⁴)	Zyy (in³)	kyy (in)
W27 × 178	52.3	27.81	14.085	1.190	0.725	6990	502	11.6	555	78.8	3.26
W27 × 161	47.4	27.59	14.020	1.080	0.660	6280	455	11.5	497	70.9	3.24
W27 × 146	42.9	27.38	13.965	0.975	0.605	5630	411	11.4	443	63.5	3.21
W27 × 114	33.5	27.29	10.070	0.930	0.570	4090	299	11.0	159	31.5	2.18
W27 × 102	30.0	27.09	10.015	0.830	0.515	3620	267	11.0	139	27.8	2.15
W27 × 94	27.7	26.92	9.990	0.745	0.490	3270	243	10.9	124	24.8	2.12
W27 × 84	24.8	26.71	9.960	0.640	0.460	2850	213	10.7	106	21.2	2.07
W24 × 162	47.7	25.00	12.955	1.220	0.705	5170	414	10.4	443	68.4	3.05
W24 × 146	43.0	24.74	12.900	1.090	0.650	4580	371	10.3	391	60.5	3.01
W24 × 131	38.5	24.48	12.855	0.960	0.605	4020	329	10.2	340	53.0	2.97
W24 × 117	34.4	24.26	12.800	0.850	0.550	3540	291	10.1	297	46.5	2.94
W24 × 104	30.6	24.06	12.750	0.750	0.500	3100	258	10.1	259	40.7	2.91

W24 × 94	27.7	24.31	9.065	0.875	0.515	2700	222	9.87	109	24.0	1.98
W24 × 84	24.7	24.10	9.020	0.770	0.470	2370	196	9.79	94.4	20.9	1.95
W24 × 76	22.4	23.92	8.990	0.680	0.440	2100	176	9.69	82.5	18.4	1.92
W24 × 68	20.1	23.73	8.965	0.585	0.415	1830	154	9.55	70.4	15.7	1.87
W24 × 62	18.2	23.74	7.040	0.590	0.430	1550	131	9.23	34.5	9.80	1.38
W24 × 55	16.2	23.57	7.005	0.505	0.395	1350	114	9.11	29.1	8.30	1.34
W21 × 147	43.2	22.06	12.510	1.150	0.720	3630	329	9.17	376	60.1	2.95
W21 × 132	38.8	21.83	12.440	1.035	0.650	3220	295	9.12	333	53.5	2.93
W21 × 122	35.9	21.68	12.390	0.960	0.600	2960	273	9.09	305	49.2	2.92
W21 × 111	32.7	21.51	12.340	0.875	0.550	2670	249	9.05	274	44.5	2.90
W21 × 101	29.8	21.36	12.290	0.800	0.500	2420	227	9.02	248	40.3	2.89
W21 × 93	27.3	21.62	8.420	0.930	0.580	2070	192	8.70	92.9	22.1	1.84
W21 × 83	24.3	21.43	8.355	0.835	0.515	1830	171	8.67	81.4	19.5	1.83
W21 × 73	21.5	21.24	8.295	0.740	0.455	1600	151	8.64	70.6	17.0	1.81
W21 × 68	20.0	21.13	8.270	0.685	0.430	1480	140	8.60	64.7	15.7	1.80
W21 × 62	18.3	20.99	8.240	0.615	0.400	1330	127	8.54	57.5	13.9	1.77
W21 × 57	16.7	21.06	6.555	0.650	0.405	1170	111	8.36	30.6	9.35	1.35
W21 × 50	14.7	20.83	6.530	0.535	0.380	984	94.5	8.18	24.9	7.64	1.30
W21 × 44	13.0	20.66	6.500	0.450	0.350	843	81.6	8.06	20.7	6.36	1.26
W18 × 119	35.1	18.97	11.265	1.060	0.655	2190	231	7.90	253	44.9	2.69
W18 × 106	31.1	18.73	11.200	0.940	0.590	1910	204	7.84	220	39.4	2.66
W18 × 97	28.5	18.59	11.145	0.870	0.535	1750	188	7.82	201	36.1	2.65
W18 × 86	25.3	18.39	11.090	0.770	0.480	1530	166	7.77	175	31.6	2.63
W18 × 76	22.3	18.21	11.035	0.680	0.425	1330	146	7.73	152	27.6	2.61
W18 × 71	20.8	18.47	7.635	0.810	0.495	1170	127	7.50	60.3	15.8	1.70
W18 × 65	19.1	18.35	7.590	0.750	0.450	1070	117	7.49	54.8	14.4	1.69
W18 × 60	17.6	18.24	7.555	0.695	0.415	984	108	7.47	50.1	13.3	1.69
W18 × 55	16.2	18.11	7.530	0.630	0.390	890	98.3	7.41	44.9	11.9	1.67
W18 × 50	14.7	17.99	7.495	0.570	0.355	800	88.9	7.38	40.1	10.7	1.65
W18 × 46	13.5	18.06	6.060	0.605	0.360	712	78.8	7.25	22.5	7.43	1.29
W18 × 40	11.8	17.90	6.015	0.525	0.315	612	68.4	7.21	19.1	6.35	1.27
W18 × 35	10.3	17.70	6.000	0.425	0.300	510	57.6	7.04	15.3	5.12	1.22
W16 × 100	29.4	16.97	10.425	0.985	0.585	1490	175	7.10	186	35.7	2.51
W16 × 89	26.2	16.75	10.365	0.875	0.525	1300	155	7.05	163	31.4	2.49
W16 × 77	22.6	16.52	10.295	0.760	0.455	1110	134	7.00	138	26.9	2.47
W16 × 67	19.7	16.33	10.235	0.665	0.395	954	117	6.96	119	23.2	2.46
W16 × 57	16.8	16.43	7.120	0.715	0.430	758	92.2	6.72	43.1	12.1	1.60
W16 × 50	14.7	16.26	7.070	0.630	0.380	659	81.0	6.68	37.2	10.5	1.59
W16 × 45	13.3	16.13	7.035	0.565	0.345	586	72.7	6.65	32.8	9.34	1.57
W16 × 40	11.8	16.01	6.995	0.505	0.305	518	64.7	6.63	28.9	8.25	1.57
W16 × 36	10.6	15.86	6.985	0.430	0.295	448	56.5	6.51	24.5	7.00	1.52
W16 × 31	9.12	15.88	5.525	0.440	0.275	375	47.2	6.41	12.4	4.49	1.17
W16 × 26	7.68	15.69	5.500	0.345	0.250	301	38.4	6.26	9.59	3.49	1.12
W14 × 730	215.0	22.42	17.890	4.910	3.070	14300	1280	8.17	4720	527	4.69
W14 × 665	196.0	21.64	17.650	4.520	2.830	12400	1150	7.98	4170	472	4.62
W14 × 605	178.0	20.92	17.415	4.160	2.595	10800	1040	7.80	3680	423	4.55
W14 × 550	162.0	20.24	17.200	3.820	2.380	9430	931	7.63	3250	378	4.49
W14 × 500	147.0	19.60	17.010	3.500	2.190	8210	838	7.48	2880	339	4.43
W14 × 455	134.0	19.02	16.835	3.210	2.015	7190	756	7.33	2560	304	4.38
W14 × 426	125.0	18.67	16.695	3.035	1.875	6600	707	7.26	2360	283	4.34
W14 × 398	117.0	18.29	16.590	2.845	1.770	6000	656	7.16	2170	262	4.31
W14 × 370	109.0	17.92	16.475	2.660	1.655	5440	607	7.07	1990	241	4.27
W14 × 342	101.0	17.54	16.360	2.470	1.540	4900	559	6.98	1810	221	4.24
W14 × 311	91.4	17.12	16.230	2.260	1.410	4330	506	6.88	1610	199	4.20

W14 × 283	83.3	16.74	16.110	2.070	1.290	3840	459	6.79	1440	179	4.17
W14 × 257	75.6	16.38	15.995	1.890	1.175	3400	415	6.71	1290	161	4.13
W14 × 233	68.5	16.04	15.890	1.720	1.070	3010	375	6.63	1150	145	4.10
W14 × 211	62.0	15.72	15.800	1.560	0.980	2660	338	6.55	1030	130	4.07
W14 × 193	56.8	15.48	15.710	1.440	0.890	2400	310	6.50	931	119	4.05
W14 × 176	51.8	15.22	15.650	1.310	0.830	2140	281	6.43	838	107	4.02
W14 × 159	46.7	14.98	15.565	1.190	0.745	1900	254	6.38	748	96.2	4.00
W14 × 145	42.7	14.78	15.500	1.090	0.680	1710	232	6.33	677	87.3	3.98
W14 × I32	38.8	14.66	14.725	1.030	0.645	1530	209	6.28	548	74.5	3.76
W14 × 120	35.3	14.48	14.670	0.940	0.590	1380	190	6.24	495	67.5	3.74
W14 × 109	32.0	14.32	14.605	0.860	0.525	1240	173	6.22	447	61.2	3.73
W14 × 99	29.1	14.16	14.565	0.780	0.485	1110	157	6.17	402	55.2	3.71
W14 × 90	26.5	14.02	14.520	0.710	0.440	999	143	6.14	362	49.9	3.70
W14 × 82	24.1	14.31	10.130	0.855	0.510	882	123	6.05	148	29.3	2.48
W14 × 74	21.8	14.17	10.070	0.785	0.450	796	112	6.04	134	26.6	2.48
W14 × 68	20.0	14.04	10.035	0.720	0.415	723	103	6.01	121	24.2	2.46
W14 × 61	17.9	13.89	9.995	0.645	0.375	640	92.2	5.98	107	21.5	2.45
W14 × 53	15.6	13.92	8.060	0.660	0.370	541	77.8	5.89	57.7	14.3	1.92
W14 × 48	14.1	13.79	8.030	0.595	0.340	485	70.3	5.85	51.4	12.8	1.91
W14 × 43	12.6	13.66	7.995	0.530	0.305	428	62.7	5.82	45.2	11.3	1.89
W14 × 38	11.2	14.10	6.770	0.515	0.310	385	54.6	5.87	26.7	7.88	1.55
W14 × 34	10.0	13.98	6.745	0.455	0.285	340	48.6	5.83	23.3	6.91	1.53
W14 × 30	8.85	13.84	6.730	0.385	0.270	291	42.0	5.73	19.6	5.82	1.49
W14 × 26	7.69	13.91	5.025	0.420	0.255	245	35.3	5.65	8.91	3.54	1.08
W14 × 22	6.49	13.74	5.000	0.335	0.230	199	29.0	5.54	7.00	2.80	1.04
W12 × 336	98.8	16.82	13.385	2.955	1.775	4060	483	6.41	1190	177	3.47
W12 × 305	89.6	16.32	13.235	2.705	1.625	3550	435	6.29	1050	159	3.42
W12 × 279	81.9	15.85	13.140	2.470	1.530	3110	393	6.16	937	143	3.38
W12 × 252	74.1	15.41	13.005	2.250	1.395	2720	353	6.06	828	127	3.34
W12 × 230	67.7	15.05	12.895	2.070	1.285	2420	321	5.97	742	115	3.31
W12 × 210	61.8	14.71	12.790	1.900	1.180	2140	292	5.89	664	104	3.28
W12 × 190	55.8	14.38	12.670	1.735	1.060	1890	263	5.82	589	93.0	3.25
W12 × 170	50.0	14.03	12.570	1.560	0.960	1650	235	5.74	517	82.3	3.22
W12 × 152	44.7	13.71	12.480	1.400	0.870	1430	209	5.66	454	72.8	3.19
W12 × 136	39.9	13.41	12.400	1.250	0.790	1240	186	5.58	398	64.2	3.16
W12 × 120	35.3	13.12	12.320	1.105	0.710	1070	163	5.51	345	56.0	3.13
W12 × 106	31.2	12.89	12.220	0.990	0.610	933	145	5.47	301	49.3	3.11
W12 × 96	28.2	12.71	12.160	0.900	0.550	833	131	5.44	270	44.4	3.09
W12 × 87	25.6	12.53	12.125	0.810	0.515	740	118	5.38	241	39.7	3.07
W12 × 79	23.2	12.38	12.080	0.735	0.470	662	107	5.34	216	35.8	3.05
W12 × 72	21.1	12.25	12.040	0.670	0.430	597	97.4	5.31	195	32.4	3.04
W12 × 65	19.1	12.12	12.000	0.605	0.390	533	87.9	5.28	174	29.1	3.02
W12 × 58	17.0	12.19	10.010	0.640	0.360	475	78.0	5.28	107	21.4	2.51
W12 × 53	15.6	12.06	9.995	0.575	0.345	425	70.6	5.23	95.8	19.2	2.48
W12 × 50	14.7	12.19	8.080	0.640	0.370	394	64.7	5.18	56.3	13.9	1.96
W12 × 45	13.2	12.06	8.045	0.575	0.335	350	58.1	5.15	50.0	12.4	1.94
W12 × 40	11.8	11.94	8.005	0.515	0.295	310	51.9	5.13	44.1	11.0	1.93
W12 × 35	10.3	12.50	6.560	0.520	0.300	285	45.6	5.25	24.5	7.47	1.54
W12 × 30	8.79	12.34	6.520	0.440	0.260	238	38.6	5.21	20.3	6.24	1.52
W12 × 26	7.65	12.22	6.490	0.380	0.230	204	33.4	5.17	17.3	5.34	1.51
W12 × 22	6.48	12.31	4.030	0.425	0.260	156	25.4	4.91	4.66	2.31	0.847
W12 × 19	5.57	12.16	4.005	0.350	0.235	130	21.3	4.82	3.76	1.88	0.822
W12 × 16	4.71	11.99	3.990	0.265	0.220	103	17.1	4.67	2.82	1.41	0.773
W12 × 14	4.16	11.91	3.970	0.225	0.200	88.6	14.9	4.62	2.36	1.19	0.753

W10 × 112	32.9	11.36	10.415	1.250	0.755	716	126	4.66	236	45.3	2.68
W10 × 100	29.4	11.10	10.340	1.120	0.680	623	112	4.60	207	40.0	2.65
W10 × 88	25.9	10.84	10.265	0.990	0.605	534	98.5	4.54	179	34.8	2.63
W10 × 77	22.6	10.60	10.190	0.870	0.530	455	85.9	4.49	154	30.1	2.60
W10 × 68	20.0	10.40	10.130	0.770	0.470	394	75.7	4.44	134	26.4	2.59
W10 × 60	17.6	10.22	10.080	0.680	0.420	341	66.7	4.39	116	23.0	2.57
W10 × 54	15.8	10.09	10.030	0.615	0.370	303	60.0	4.37	103	20.6	2.56
W10 × 49	14.4	9.98	10.000	0.560	0.340	272	54.6	4.35	93.4	18.7	2.54
W10 × 45	13.3	10.10	8.020	0.620	0.350	248	49.1	4.32	53.4	13.3	2.01
W10 × 39	11.5	9.92	7.985	0.530	0.315	209	42.1	4.27	45.0	11.3	1.98
W10 × 33	9.71	9.73	7.960	0.435	0.290	170	35.0	4.19	36.6	9.20	1.94
W10 × 30	8.84	10.47	5.810	0.510	0.300	170	32.4	4.38	16.7	5.75	1.37
W10 × 26	7.61	10.33	5.770	0.440	0.260	144	27.9	4.35	14.1	4.89	1.36
W10 × 22	6.49	10.17	5.750	0.360	0.240	118	23.2	4.27	11.4	3.97	1.33
W10 × 19	5.62	10.24	4.020	0.395	0.250	96.3	18.8	4.14	4.29	2.14	0.874
W10 × 17	4.99	10.11	4.010	0.330	0.240	81.9	16.2	4.05	3.56	1.78	0.844
W10 × 15	4.41	9.99	4.000	0.270	0.230	68.9	13.8	3.95	2.89	1.45	0.810
W10 × 12	3.54	9.87	3.960	0.210	0.190	53.8	10.9	3.90	2.18	1.10	0.785
W8 × 67	19.7	9.00	8.280	0.935	0.570	272	60.4	3.72	88.6	21.4	2.12
W8 × 58	17.1	8.75	8.220	0.810	0.510	228	52.0	3.65	75.1	18.3	2.10
W8 × 48	14.1	8.50	8.110	0.685	0.400	184	43.3	3.61	60.9	15.0	2.08
W8 × 40	11.7	8.25	8.070	0.560	0.360	146	35.5	3.53	49.1	12.2	2.04
W8 × 35	10.3	8.12	8.020	0.495	0.310	127	31.2	3.51	42.6	10.6	2.03
W8 × 31	9.13	8.00	7.995	0.435	0.285	110	27.5	3.47	37.1	9.27	2.02
W8 × 28	8.25	8.06	6.535	0.465	0.285	98.0	24.3	3.45	21.7	6.63	1.62
W8 × 24	7.08	7.93	6.495	0.400	0.245	82.8	20.9	3.42	18.3	5.63	1.61
W8 × 21	6.16	8.28	5.270	0.400	0.250	75.3	18.2	3.49	9.77	3.71	1.26
W8 × 18	5.26	8.14	5.250	0.330	0.230	61.9	15.2	3.43	7.97	3.04	1.23
W8 × 15	4.44	8.11	4.015	0.315	0.245	48.0	11.8	3.29	3.41	1.70	0.876
W8 × 13	3.84	7.99	4.000	0.255	0.230	39.6	9.91	3.21	2.73	1.37	0.843
W8 × 10	2.96	7.89	3.940	0.205	0.170	30.8	7.81	3.22	2.09	1.06	0.841
W6 × 25	7.34	6.38	6.080	0.455	0.320	53.4	16.7	2.70	17.10	5.61	1.52
W6 × 20	5.87	6.20	6.020	0.365	0.260	41.4	13.4	2.66	13.30	4.41	1.50
W6 × 16	4.74	6.28	4.030	0.405	0.260	32.1	10.2	2.60	4.43	2.20	0.966
W6 × 15	4.43	5.99	5.990	0.260	0.230	29.1	9.72	2.56	9.32	3.11	1.46
W6 × 12	3.55	6.03	4.000	0.280	0.230	22.1	7.31	2.49	2.99	1.50	0.918
W6 × 9	2.68	5.90	3.940	0.215	0.170	16.4	5.56	2.47	2.19	1.11	0.905
W5 × 19	5.54	5.15	5.030	0.430	0.270	26.2	10.2	2.17	9.13	3.63	1.28
W5 × 16	4.68	5.01	5.000	0.360	0.240	21.3	8.51	2.13	7.51	3.00	1.27
W4 × 13	3.83	4.16	4.060	0.345	0.280	11.3	5.46	1.72	3.86	1.90	1.00

BROWN-STRAUSS STEEL

ASTM-A992 SPECIFICATIONS

BACK TO SERVICES

BACK TO MAIN PAGE

TABLE 1: CHEMICAL REQUIREMENTS(Heat Analysis)

Element	Composition, %
Carbon, max	0.23
Manganese	0.50-1.50[A]
Silicon, max	0.40
Vanadium, max	0.11[B,C]
Columbium, max	0.05[B]
Phosphorus, max	0.055
Sulfur, max	0.045
Copper, max	0.60
Nickel, max	0.48
Chromium, max	0.35
Molybdenum, max	0.15

[A]Provided that the ratio of manganese to sulfur is not less that 20:1, the minimum limit for manganese for Group 1 shapes shall be 0.30%.

[B]The sum of columbium and vanadium shall not exceed 0.15%.

[C]When vanadium is added as the only nitrogen-binding element, nitrogen shall be reported and the ratio of vanadium to nitrogen shall be 4:1 or higher if the nitrogen is greater than 0.012%

TABLE 2: TENSILE REQUIREMENTS

Tensile strength, min kal (MPa)	65
Yield point, ksi (Mpa)	50-65

Yield to tensile ratio, max	0.85
Elongation in 8 in. (200mm). min %*	18
Elongation in 2 in. (50mm). min %*	21

*See elongation requirements under the Tension Tests section of Specification A B/A 6M.

KEYWORDS

7.1 building framing; shapes; structural steel; welded construction.

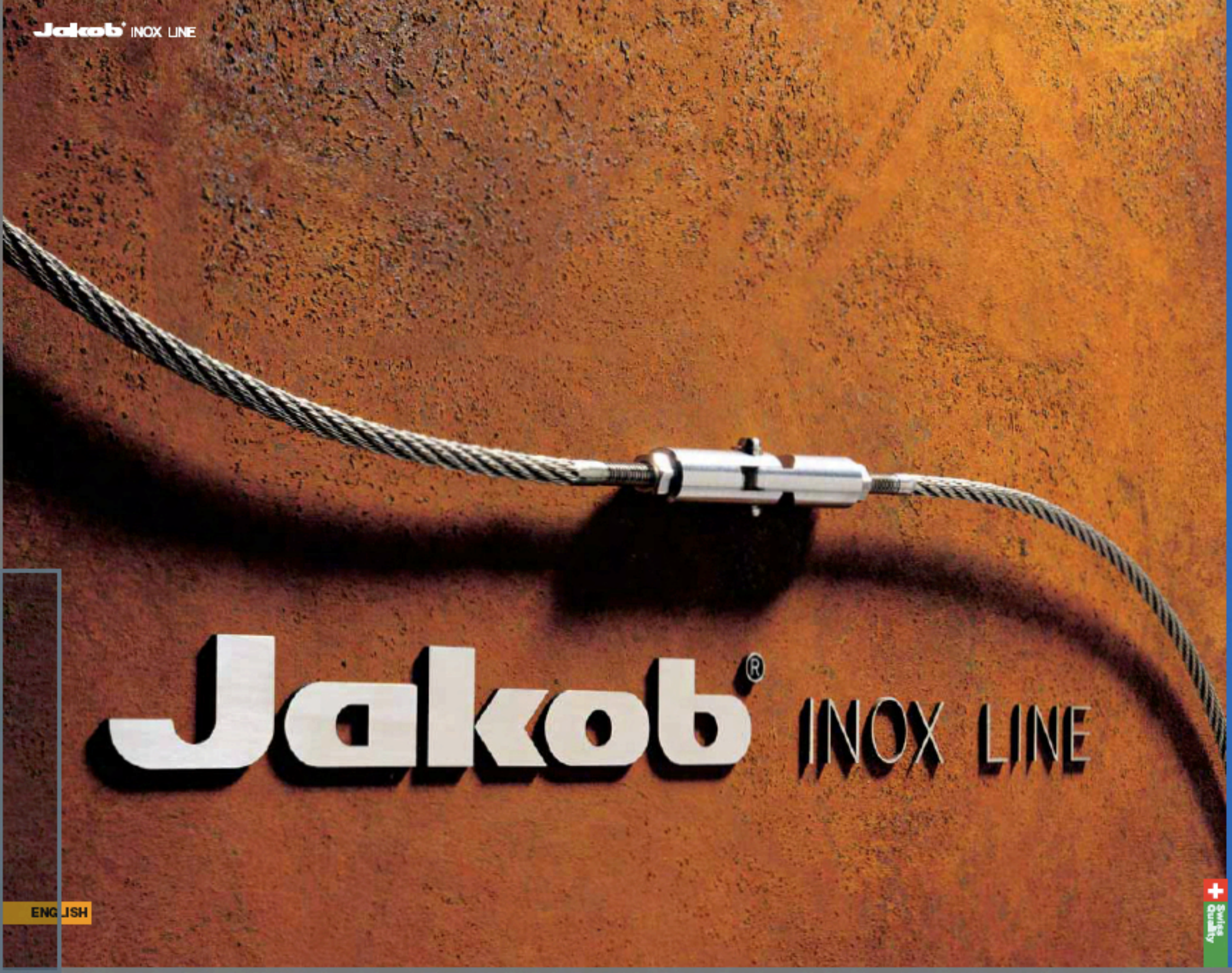

Basic

5.1

Swiss Quality

ENGLISH


05
Jakob INOX LINE
Jakob INOX LINE

01

02

10 Series Profile Material Specifications

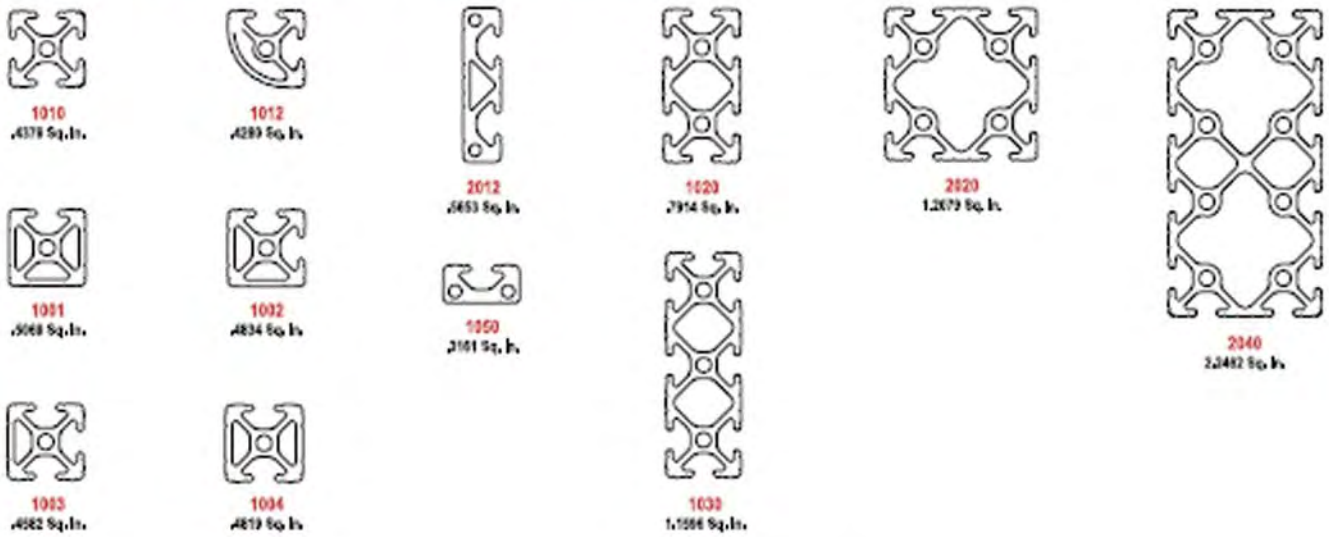

Part No.	1010	1001	1002	1003	1004	1012
Material	6105-T5 Aluminum					
Finish	Clear Anodize #204-R1					
Weight Per Foot	.5097 Lbs.	.5900 Lbs.	.5627 Lbs.	.5333 Lbs.	.5609 Lbs.	.4982 Lbs.
Stock Length *	97", 145", 242"	145" or 242"	145" or 242"	145" or 242"	145" or 242"	145" or 242"
Moment of Inertia	IX=.0442"⁴ IY=.0442"⁴	IX=.0493"⁴ IY=.0542"⁴	IX=.0492"⁴ IY=.0492"⁴	IX=.0441"⁴ IY=.0491"⁴	IX=.0443"⁴ IY=.0541"⁴	IX=.0400"⁴ IY=.0400"⁴
Estimated Area	.4379 Sq. In.	.5069 Sq. In.	.4834 Sq. In.	.4582 Sq. In	.4819 Sq. In	.4280 Sq. In
Modulus of Elasticity	10,200,000 Lbs./Sq. In.					

Part No.	1050	2012	1020	1030	2020	2040
Material	6105-T5 Aluminum					
Finish	Clear Anodize #204-R1					
Weight Per Foot	.3679 Lbs.	.6580 Lbs.	.9212 Lbs.	1.3498 Lbs.	1.4060 Lbs.	2.6146 Lbs.
Stock Length *	145"	145"	97", 145", 242"	145" or 242"	145" or 242"	145" or 242"
Moment of Inertia	IX=.0074"⁴ IY=.0323"⁴	IX=.2253"⁴ IY=.0146"⁴	IX=.3078"⁴ IY=.0833"⁴	IX=.9711"⁴ IY=.1238"⁴	IX=.5509"⁴ IY=.5509"⁴	IX=3.5168"⁴ IY=1.0513"⁴
Estimated Area	.3161 Sq. In.	.5653 Sq. In.	.7914 Sq. In.	1.1596 Sq. In	1.2079 Sq. In	2.2462 Sq. In
Modulus of Elasticity	10,200,000 Lbs./Sq. In.					

* For profile lengths other than stock length refer to page 386 for profile cut to length services.

Download 80/20®'s Deflection CalculatorX™,
The Profile Strength Calculator @ www.8020.net/designtools

SPECIFICATION SECTION

DIVISION 6 - WOOD AND PLASTICS

iLevel™ by Weyerhaeuser

TRUS JOIST® TJI® 110 ▪ TJI® 210 TJI® 230 ▪ TJI® 360 TJI® 560 JOISTS

Featuring Silent Floor® Joists for Residential Applications

- Uniform and Predictable
- Lightweight for Fast Installation
- Resource Efficient
- Resists Bowing, Twisting, and Shrinking
- Significantly Reduces Callbacks
- Available in Long Lengths
- Limited Product Warranty

#TJ-4000 SPECIFIER'S GUIDE

www.iLevel.com
1.888.iLevel8 (1.888.453.8358)

Weyerhaeuser

WELCOME TO iLEVEL

iLevel is an exciting new brand and business within Weyerhaeuser. iLevel brings the most innovative and trusted products for residential construction together under one roof. Within iLevel, you'll still find all the reliable, brand-name building products that you've been using—Trus Joist® engineered wood products and design software, Structurwood® engineered panels, Performance Tested™ lumber, and more. But with iLevel, you'll work with only one service-oriented supplier to get all of these products and the support you need to build smarter.

iLevel. A family of brand-name building products...
a source for innovative ideas and solutions...
a supplier that's simpler to do business with.

TJI® Joists Revolutionized the Way You Build Floors

Trus Joist® developed wooden I-joists nearly 40 years ago, and since then we've continually improved their quality and made them easier to work with. Engineered to provide strength and consistency, iLevel™ Trus Joist® Silent Floor® joists (TJI® joists) are a key part of our FrameWorks® Floor system.

Here's Why so Many Specifiers and Builders Choose Silent Floor® Joists:

Design flexibility—longer lengths mean versatile design options. Silent Floor® joists continue to set the standard for residential floor and roof joists. Their strength and long lengths give you the freedom to design the open, spacious floor plans that your customers want. Engineered for dimensional stability and predictable performance, Silent Floor® joists resist warping, twisting, and shrinking.

Easy installation—fewer surprises on the job. The precision engineering that makes Silent Floor® joists strong also makes them easier to install. Silent Floor® joists are designed for easy handling and fast installation. They are lightweight, easy to cut, and can be installed using standard construction tools. Silent Floor® joists come with precut knockout holes, and additional holes for ductwork can be cut at the jobsite. These same features also make them a popular choice for roof joists.

TABLE OF CONTENTS

ABOUT THIS GUIDE

The residential products in this guide are intended for use in single-family dwellings and are readily available through our nationwide network of distributors and dealers.
For information on using these products in multi-family dwellings, contact your iLevel representative.

For commercial applications such as retail stores, office buildings, schools, restaurants, hotels, and nursing homes, please refer to the *TJI® L65, L90, H90 Trus Joist® Commercial Specifier's Guide* (Reorder #1062). Commercial products are typically designed, manufactured, and sold for each specific job.

For more information on any iLevel™ product, please call **1-888-453-8358**.

Design Properties (100% Load Duration)

Depth	TJI®	Basic Properties				Reaction Properties		
		Joist Weight (lbs/ft)	Maximum Resistive Moment(1) (ft-lbs)	Joist Only EI x 10^6 (in.^{2}-lbs)	Maximum Vertical Shear (lbs)	1¾" End Reaction (lbs)	3½" Intermediate Reaction (lbs)	
							No Web Stiffeners	With Web Stiffeners
9½"	110	2.3	2,380	140	1,220	885	1,935	N.A.
	210	2.6	2,860	167	1,330	980	2,145	N.A.
	230	2.7	3,175	183	1,330	1,035	2,410	N.A.
11⅞"	110	2.5	3,015	238	1,560	885	1,935	2,295
	210	2.8	3,620	283	1,655	980	2,145	2,505
	230	3.0	4,015	310	1,655	1,035	2,410	2,765
	360	3.0	6,180	419	1,705	1,080	2,460	2,815
	560	4.0	9,500	636	2,050	1,265	3,000	3,475
14"	110	2.8	3,565	351	1,860	885	1,935	2,295
	210	3.1	4,280	415	1,945	980	2,145	2,505
	230	3.3	4,755	454	1,945	1,035	2,410	2,765
	360	3.3	7,335	612	1,955	1,080	2,460	2,815
	560	4.2	11,275	926	2,390	1,265	3,000	3,475
16"	210	3.3	4,895	566	2,190	980	2,145	2,505
	230	3.5	5,440	618	2,190	1,035	2,410	2,765
	360	3.5	8,405	830	2,190	1,080	2,460	2,815
	560	4.5	12,925	1,252	2,710	1,265	3,000	3,475

(1) **Caution: Do not** increase joist moment design properties by a repetitive member use factor.

TJI® joists are intended for dry-use applications

General Notes

- Design reaction includes all loads on the joist. Design shear is computed at the inside face of supports and includes all loads on the span(s). Allowable shear may sometimes be increased at interior supports in accordance with ICC ES ESR-1153, and these increases are reflected in span tables.
- The following formulas approximate the uniform load deflection of Δ (inches):

For TJI® 110, 210, 230, and 360 Joists

$$\Delta = \frac{22.5\ wL^4}{EI} + \frac{2.67\ wL^2}{d \times 10^5}$$

For TJI® 560 Joists

$$\Delta = \frac{22.5\ wL^4}{EI} + \frac{2.29\ wL^2}{d \times 10^5}$$

w = uniform load in pounds per linear foot
L = span in feet
d = out-to-out depth of the joist in inches
EI = value from table above

Material Weights

(Include TJI® weights in dead load calculations—see **Design Properties** table at left for joist weights)

Floor Panels

Southern Pine

½" plywood 1.7
⅝" plywood . . . . . 2.0 psf
¾" plywood . . . . . 2.5 psf
1⅛" plywood . . . . . 3.8 psf
½" OSB . . . . . 1.8 psf
⅝" OSB . . . . . 2.2 psf
¾" OSB . . . . . 2.7 psf
⅞" OSB . . . . . 3.1 psf
1⅛" OSB . . . . . 4.1 psf

Based on: Southern pine – 40 pcf for plywood, 44 pcf for OSB

Roofing

Asphalt shingles . . . . . 2.5 psf
Wood shingles . . . . . 2.0 psf
Clay tile . . . . . 9.0 to 14.0 psf
Slate (⅜" thick) . . . . . 15.0 psf

Roll or Batt Insulation (1" thick):

Rock wool . . . . . 0.2 psf
Glass wool . . . . . 0.1 psf

Floor Finishes

Hardwood (nominal 1") . . . . . 4.0 psf
Sheet vinyl . . . . . 0.5 psf
Carpet and pad . . . . . 1.0 psf
¾" ceramic or quarry tile . . . . . 10.0 psf

Concrete:

Regular (1") . . . . . 12.0 psf
Lightweight (1") . . . . . 8.0 to 10.0 psf
Gypsum concrete (¾") . . . . . 6.5 psf

Ceilings

Acoustical fiber tile . . . . . 1.0 psf
½" gypsum board . . . . . 2.2 psf
⅝" gypsum board . . . . . 2.8 psf
Plaster (1" thick) . . . . . 8.0 psf

Code Evaluations: See ICC ES ESR-1153 and ICC ES ESR-1387

FLOOR SPAN TABLES

Not all products are available in all markets. Contact your iLevel representative for information.

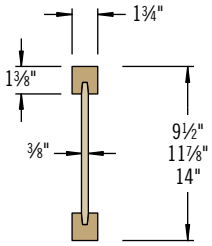

TJI® 110 Joists

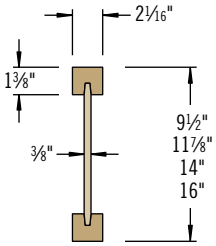

TJI® 210 Joists

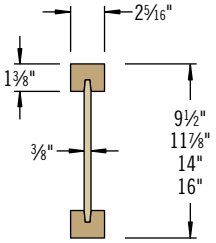

TJI® 230 Joists

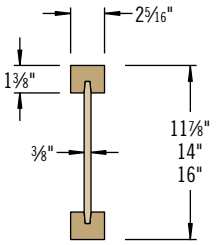

TJI® 360 Joists

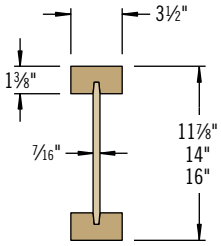

TJI® 560 Joists

L/480 Live Load Deflection

Depth	TJI®	40 PSF Live Load / 10 PSF Dead Load				40 PSF Live Load / 20 PSF Dead Load			
		12" o.c.	16" o.c.	19.2" o.c.	24" o.c.	12" o.c.	16" o.c.	19.2" o.c.	24" o.c.
9½"	110	16'-5"	15'-0"	14'-2"	13'-2"	16'-5"	15'-0"	13'-11"	12'-5"
	210	17'-3"	15'-9"	14'-10"	13'-10"	17'-3"	15'-9"	14'-10"	13'-8"
	230	17'-8"	16'-2"	15'-3"	14'-2"	17'-8"	16'-2"	15'-3"	14'-2"
11⅞"	110	19'-6"	17'-10"	16'-10"	15'-5"(1)	19'-6"	17'-3"	15'-8"	14'-0"(1)
	210	20'-6"	18'-8"	17'-8"	16'-5"	20'-6"	18'-8"	17'-3"	15'-5"(1)
	230	21'-0"	19'-2"	18'-1"	16'-10"	21'-0"	19'-2"	18'-1"	16'-3"(1)
	360	22'-11"	20'-11"	19'-8"	18'-4"	22'-11"	20'-11"	19'-8"	17'-10"(1)
	560	26'-1"	23'-8"	22'-4"	20'-9"	26'-1"	23'-8"	22'-4"	20'-9"(1)
14"	110	22'-2"	20'-3"	18'-9"	16'-9"(1)	21'-8"	18'-9"	17'-1"(1)	14'-7"(1)
	210	23'-3"	21'-3"	20'-0"	18'-4"(1)	23'-3"	20'-7"	18'-9"(1)	16'-2"(1)
	230	23'-10"	21'-9"	20'-6"	19'-1"	23'-10"	21'-8"	19'-9"	17'-1"(1)
	360	26'-0"	23'-8"	22'-4"	20'-9"(1)	26'-0"	23'-8"	22'-4"(1)	17'-10"(1)
	560	29'-6"	26'-10"	25'-4"	23'-6"	***29'-6"***	***26'-10"***	25'-4"(1)	20'-11"(1)
16"	210	25'-9"	23'-6"	22'-0"(1)	19'-5"(1)	25'-5"	22'-0"(1)	20'-1"(1)	16'-2"(1)
	230	26'-5"	24'-1"	22'-9"	20'-7"(1)	***26'-5"***	23'-2"	21'-2"(1)	17'-1"(1)
	360	28'-9"	26'-3"	24'-8"(1)	21'-5"(1)	***28'-9"***	26'-3"(1)	22'-4"(1)	17'-10"(1)
	560	32'-8"	29'-8"	28'-0"	25'-2"(1)	***32'-8"***	***29'-8"***	26'-3"(1)	20'-11"(1)

L/360 Live Load Deflection (Minimum Criteria per Code)

Depth	TJI®	40 PSF Live Load / 10 PSF Dead Load				40 PSF Live Load / 20 PSF Dead Load			
		12" o.c.	16" o.c.	19.2" o.c.	24" o.c.	12" o.c.	16" o.c.	19.2" o.c.	24" o.c.
9½"	110	18'-2"	16'-7"	15'-3"	13'-8"	17'-8"	15'-3"	13'-11"	12'-5"
	210	19'-1"	17'-5"	16'-6"	15'-0"	19'-1"	16'-9"	15'-4"	13'-8"
	230	19'-7"	17'-11"	16'-11"	15'-9"	19'-7"	17'-8"	16'-1"	14'-5"
11⅞"	110	21'-7"	18'-11"	17'-3"	15'-5"(1)	19'-11"	17'-3"	15'-8"	14'-0"(1)
	210	22'-8"	20'-8"	18'-11"	16'-10"	21'-10"	18'-11"	17'-3"	15'-5"(1)
	230	23'-3"	21'-3"	19'-11"	17'-9"	***23'-0"***	19'-11"	18'-2"	16'-3"(1)
	360	25'-4"	23'-2"	21'-10"	20'-4"(1)	***25'-4"***	***23'-2"***	***21'-10"(1)***	17'-10"(1)
	560	28'-10"	26'-3"	24'-9"	23'-0"	***28'-10"***	***26'-3"***	***24'-9"***	20'-11"(1)
14"	110	23'-9"	20'-6"	18'-9"	16'-9"(1)	21'-8"	18'-9"	17'-1"(1)	14'-7"(1)
	210	25'-8"	22'-6"	20'-7"	18'-4"(1)	23'-9"	20'-7"	18'-9"(1)	16'-2"(1)
	230	26'-4"	23'-9"	21'-8"	19'-4"(1)	***25'-0"***	21'-8"	19'-9"	17'-1"(1)
	360	28'-9"	26'-3"	24'-9"(1)	21'-5"(1)	***28'-9"***	***26'-3"(1)***	22'-4"(1)	17'-10"(1)
	560	32'-8"	29'-9"	28'-0"	25'-2"(1)	***32'-8"***	***29'-9"***	***26'-3"(1)***	20'-11"(1)
16"	210	27'-10"	24'-1"	22'-0"(1)	19'-5"(1)	25'-5"	22'-0"(1)	20'-1"(1)	16'-2"(1)
	230	29'-2"	25'-5"	23'-2"	20'-7"(1)	***26'-9"***	23'-2"	21'-2"(1)	17'-1"(1)
	360	31'-10"	29'-0"	26'-10"(1)	21'-5"(1)	***31'-10"***	***26'-10"(1)***	22'-4"(1)	17'-10"(1)
	560	36'-1"	32'-11"	31'-0"(1)	25'-2"(1)	***36'-1"***	***31'-6"(1)***	26'-3"(1)	20'-11"(1)

Long-term deflection under dead load, which includes the effect of creep, has not been considered. ***Bold italic*** spans reflect initial dead load deflection exceeding 0.33".

(1) Web stiffeners are required at intermediate supports of continuous-span joists when the intermediate bearing length is ***less*** than 5¼" and the span on either side of the intermediate bearing is greater than the following spans:

TJI®	40 PSF Live Load / 10 PSF Dead Load				40 PSF Live Load / 20 PSF Dead Load			
	12" o.c.	16" o.c.	19.2" o.c.	24" o.c.	12" o.c.	16" o.c.	19.2" o.c.	24" o.c.
110	N.A.	N.A.	N.A.	15'-4"	N.A.	N.A.	16'-0"	12'-9"
210	N.A.	N.A.	21'-4"	17'-0"	N.A.	21'-4"	17'-9"	14'-2"
230	N.A.	N.A.	N.A.	19'-2"	N.A.	N.A.	19'-11"	15'-11"
360	N.A.	N.A.	24'-5"	19'-6"	N.A.	24'-5"	20'-4"	16'-3"
560	N.A.	N.A.	29'-10"	23'-10"	N.A.	29'-10"	24'-10"	19'-10"

How to Use These Tables

1. Determine the appropriate live load deflection criteria.
2. Identify the live and dead load condition.
3. Select on-center spacing.
4. Scan down the column until you meet or exceed the span of your application.
5. Select iLevel™ Trus Joist® TJI® joist and depth.

Live load deflection is not the only factor that affects how a floor will perform. To more accurately predict floor performance, use our iLevel™ Trus Joist® TJ-Pro™ Rating System.

General Notes

- Tables are based on:
  - Uniform loads.
  - More restrictive of simple or continuous span.
  - Clear distance between supports (1¾" minimum end bearing).
- Assumed composite action with a single layer of 24" on-center span-rated, glue-nailed floor panels for deflection only. **Spans shall be reduced 6" when floor panels are nailed only.**
- Spans generated from iLevel™ software may exceed the spans shown in these tables because software reflects actual design conditions.
- For loading conditions not shown, refer to software or to the load table on page 5.

Floor—100% (PLF)

Depth	TJI®	Joist Clear Span																	
		8'		10'		12'		14'		16'		18'		20'		22'		24'	
		Live Load L/480	Total Load	Live Load L/480	Total Load	Live Load L/480	Total Load	Live Load L/480	Total Load	Live Load L/480	Total Load	Live Load L/480	Total Load	Live Load L/480	Total Load	Live Load L/480	Total Load	Live Load L/480	Total Load
9½"	110	*	190	127	152	77	127	50	95										
	210	*	210	147	169	90	141	59	114	40	81								
	230	*	236	159	190	98	158	64	126	44	88								
11⅞"	110	*	190	*	152	*	127	83	109	57	92								
	210	*	210	*	169	*	141	97	121	67	106	48	87						
	230	*	236	*	190	*	158	105	136	73	119	52	97	39	78				
	360	*	241	*	193	*	162	136	139	95	121	69	108	51	97	39	78		
	560	*	294	*	236	*	197	*	169	138	148	101	132	76	119	58	108	45	91
14"	110	*	190	*	152	*	127	*	109	83	95	59	85						
	210	*	210	*	169	*	141	*	121	96	106	69	94	51	84				
	230	*	236	*	190	*	158	*	136	104	119	75	106	56	93	43	77		
	360	*	241	*	193	*	162	*	139	*	121	98	108	73	97	56	88	44	81
	560	*	294	*	236	*	197	*	169	*	148	*	132	107	119	83	108	65	99
16"	210	*	210	*	169	*	141	*	121	*	106	93	94	69	85	53	77		
	230	*	236	*	190	*	158	*	136	*	119	100	106	75	95	57	87		
	360	*	241	*	193	*	162	*	139	*	121	*	108	*	97	75	88	59	81
	560	*	294	*	236	*	197	*	169	*	148	*	132	*	119	*	108	86	99

*Indicates that **Total Load** value controls.

How to Use This Table

1. Calculate actual total and live load in pounds per linear foot (plf).
2. Select appropriate **Joist Clear Span**.
3. Scan down the column to find a TJI® joist that meets or exceeds actual total and live loads.

General Notes

- Table is based on:
  - Uniform loads.
  - No composite action provided by sheathing.
  - More restrictive of simple or continuous span.
- **Total Load** limits joist deflection to L/240.
- **Live Load** is based on joist deflection of L/480.
- If a live load deflection limit of L/360 is desired, multiply value in **Live Load** column by 1.33. The resulting live load shall not exceed the **Total Load** shown.

PSF to PLF Conversions

O.C. Spacing	Load in Pounds Per Square Foot (PSF)								
	20	25	30	35	40	45	50	55	60
	Load in Pounds Per Linear Foot (PLF)								
12"	20	25	30	35	40	45	50	55	60
16"	27	34	40	47	54	60	67	74	80
19.2"	32	40	48	56	64	72	80	88	96
24"	40	50	60	70	80	90	100	110	120

DO NOT walk on joists until braced. INJURY MAY RESULT.

DO NOT stack building materials on unsheathed joists. Stack only over beams or walls.

DO NOT walk on joists that are lying flat.

WARNING

Joists are unstable until braced laterally

Bracing Includes:

- Blocking
- Hangers
- Rim Board
- Sheathing
- Rim Joist
- Strut Lines

WARNING NOTES: *Lack of proper bracing during construction can result in serious accidents. Observe the following guidelines:*

1. All blocking, hangers, rim boards, and rim joists at the end supports of the TJI® joists must be completely installed and properly nailed.
2. Lateral strength, like a braced end wall or an existing deck, must be established at the ends of the bay. This can also be accomplished by a temporary or permanent deck (sheathing) fastened to the first 4 feet of joists at the end of the bay.
3. Safety bracing lines of 1x4 (minimum) must be nailed to a braced end wall or sheathed area (as in note 2) and to each joist. Without this bracing, buckling sideways or rollover is highly probable under light construction loads—such as a worker or one layer of unnailed sheathing.
4. Sheathing must be completely attached to each TJI® joist before additional loads can be placed on the system.
5. Ends of cantilevers require safety bracing on both the top and bottom flanges.
6. The flanges must remain straight within a tolerance of ½" from true alignment.

It's About Choice—

The iLevel™ Trus Joist® TJ-Pro™ Rating System is a sophisticated computer model for predicting floor performance and evaluating the relationship between the cost and the "feel" of any given floor system. Its methodology is based on extensive laboratory research, more than one million installations, and the combined expertise of some of the best engineers in the field. TJ-Pro™ Rating goes beyond deflection criteria to consider job-specific needs and expectations. In many cases, TJ-Pro™ Rating will offer a system that improves performance while actually reducing costs!

TJ-Pro™ Rating System Advantages:

- Works as part of iLevel™ TJ-Beam® and TJ-Xpert® software.
- Provides a new method for accurately predicting floor performance.
- Takes perceptions of the homeowner into account.
- Provides cost comparison.

Perceived Floor Performance

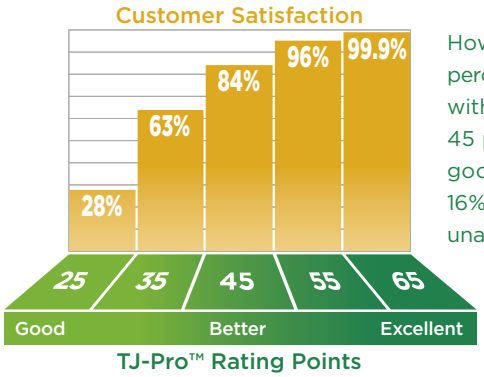

How do most people perceive a floor assembly with a TJ-Pro™ Rating of 45 points? 84% find it good to excellent and 16% find it marginal to unacceptable.

Design Smarter—Don't Over-Specify

The traditional way to specify a floor system is to use live load deflection criteria, but deflection explains only part of how a floor performs. Depending on factors unique to the structure and its use, the code minimum of L/360 (or even the more restrictive limits of L/480) may disappoint many customers.

The TJ-Pro™ Rating System is a much better predictor of floor performance because it considers the many factors that affect floor performance, even taking into account the perceptions of the homeowner. With so many variables, you can deliver an economical solution tailored to your customer's expectations.

Factors That Affect Floor Performance:

- TJI® joist series, depth, and spacing
- Deck thickness and quality
- Directly applied ceilings
- Location of partitions on floor
- Blocking
- Bearing conditions for the TJI® joists

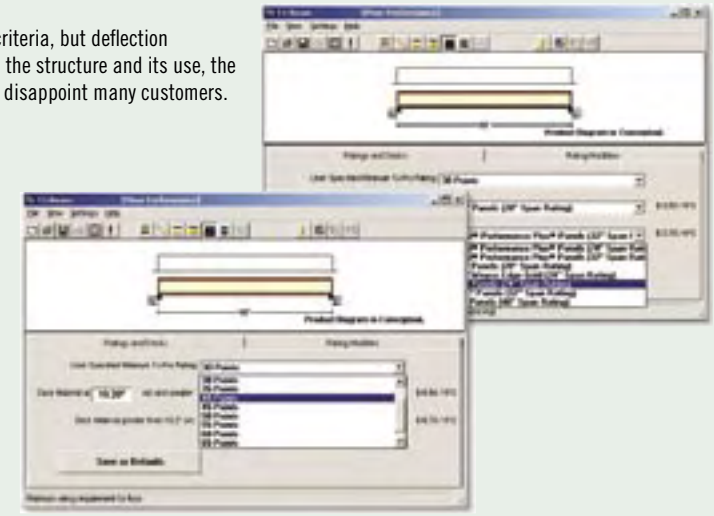

Get the Support You Need—

We're here to help you make the most of the TJ-Pro™ Rating System, whether it's help with setup, tips and tricks, or selecting the best rating for your project. Call your iLevel representative today.

The iLevel™ Trus Joist® FrameWorks® Floor System
The Premium Floor System From iLevel

You'll Like the Way it Builds.
Your Customers Will Love the Way it Feels.

Design Your Floors to Suit Each Customer

With the TJ-Pro™ Rating System and iLevel's proprietary materials, we can accurately predict what it will take to build a floor that satisfies even your most demanding customer. And you'll get the right balance of cost and performance in every system.

Fewer Callbacks and More Referrals

Satisfied customers mean more referrals. And the FrameWorks® Floor System is the best way to make sure that there's less to complain about. It takes the guesswork out of how to build a floor that will make your customers happy.

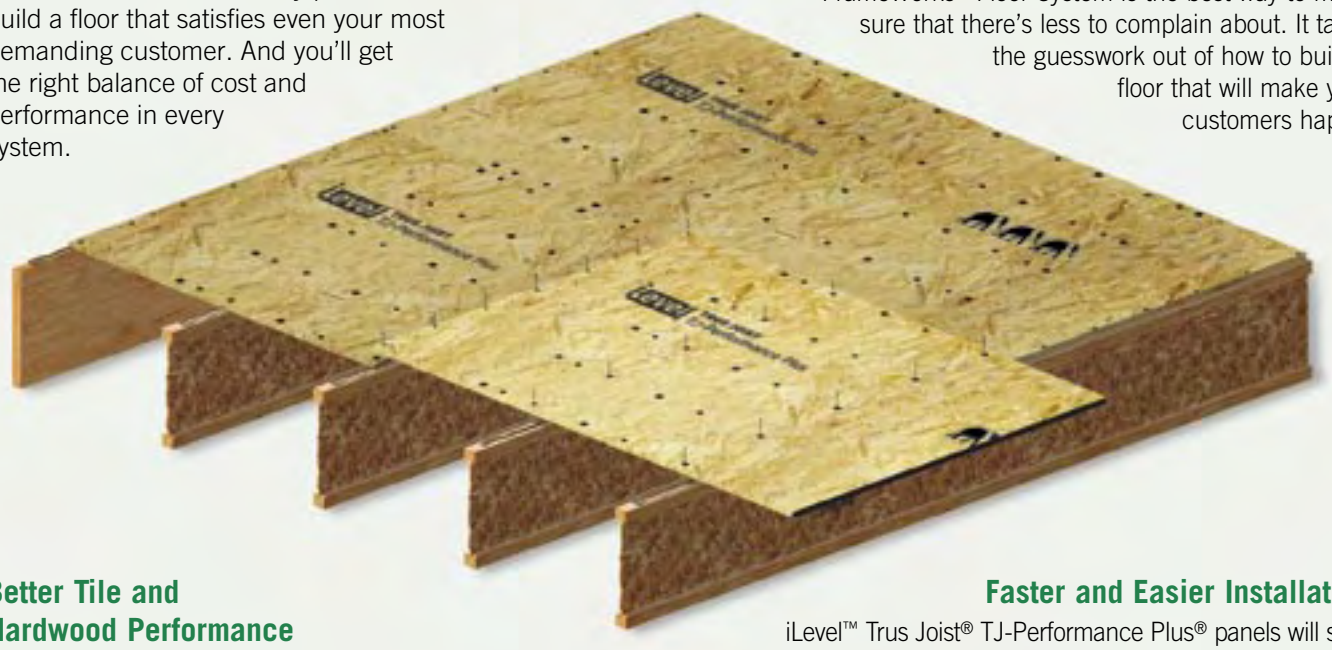

Better Tile and Hardwood Performance

Our unique panel provides increased stiffness, better fastener holding, and lower edge swell than commodity panels, so it's ideal for hardwood and ceramic tile applications.

Faster and Easier Installation

iLevel™ Trus Joist® TJ-Performance Plus® panels will save you time. The precise fastening template makes it easy to get it right the first time, and the self-gapping tongue and groove lets your crews slide the panels into place quickly.

Now You Can Build a Strong and Stable Floor—Without Overbuilding.

The performance of most commodity building products is unpredictable. But since we know the precise strength of every component in the FrameWorks® Floor System, we can comfortably build to your specifications while making sure that you don't use more material than you need.

Silent Floor® joists have very specific performance characteristics. TJ-Performance Plus® panels are made with a proprietary formula, meet precise thickness tolerances, and have a top-quality edge seal—making them more stable and consistent than other structural panels. iLevel™ Trus Joist® TimberStrand® LSL rim board; TimberStrand® LSL, Parallam® PSL, and Microllam® LVL beams and columns, and our helpful installation guidelines give you more control, more strength, and more reliability than you could get with a package made up of typical framing materials.

So next time you're building someone's dream home, don't rely on guesswork. Bring your plans to any iLevel location and we'll show you how to make the most of both your framing material and the labor it takes to turn it into a home.

For projects that demand quality, performance, and customer satisfaction, upgrade to the FrameWorks® Floor System.
Contact your iLevel representative or call 1-888-453-8358 for more information.

SILENT FLOOR® JOIST FRAMING

Silent Floor® joist framing does not require bridging or mid-span blocking

Joists must be laterally supported at cantilever and end bearings by blocking panels, hangers, or direct attachment to a rim board or rim joist

Rim board joint between joists

1¼" TimberStrand® LSL or 1⅛" iLevel™ rim board

Safety bracing (1x4 minimum) placed at 8' on-center (6' on-center for TJI® 110 joists) and extended to a braced end wall. Fasten at each joist with two 8d (2½") nails minimum.

Protect untreated wood from direct contact with concrete

1½" knockouts at approximately 12" on-center

See **Allowable Holes** on page 11

See **Exterior Deck Attachment** on page 10

WARNING
Joists are unstable until laterally braced.
See Warning Notes on page 5.

TJI® Joist Nailing Requirements at Bearing

TJI® Joist to Bearing Plate

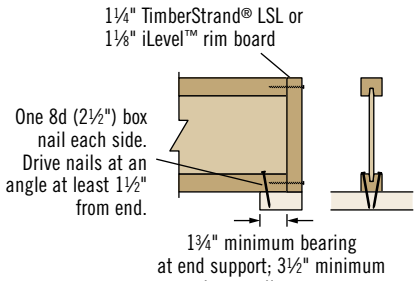

Shear transfer: Connections equivalent to floor panel nailing schedule

Squash Blocks to TJI® Joist (Load bearing wall above)

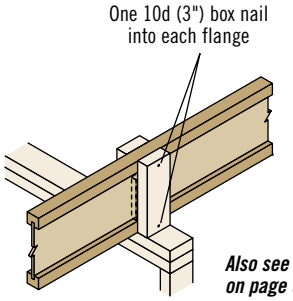

Also see detail B2 on page 9

Web Stiffener Attachment

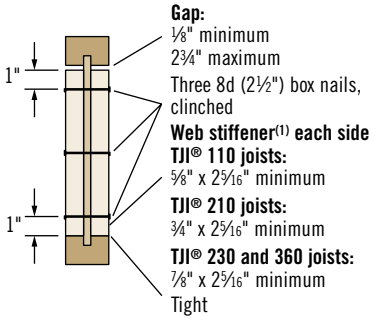

TJI® 560 Joists Only

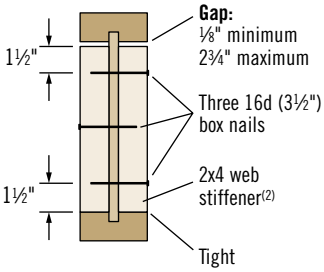

Rim to TJI® Joist

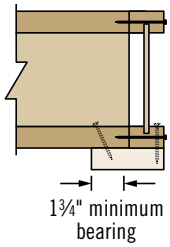

1¼" TimberStrand® LSL, 1⅛" iLevel™ rim board, or TJI® 110 rim joist:
One 10d (3") box nail into each flange

TJI® 210, 230, and 360 rim joist:
One 16d (3½") box nail into each flange

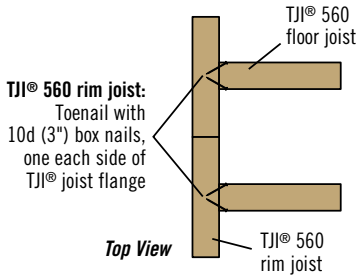

Locate rim board joint between joists

W

(1) PS1 or PS2 sheathing, face grain vertical
(2) Construction grade or better

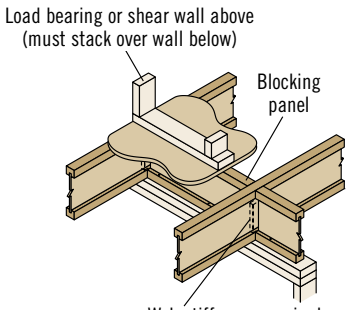

B1 B1W

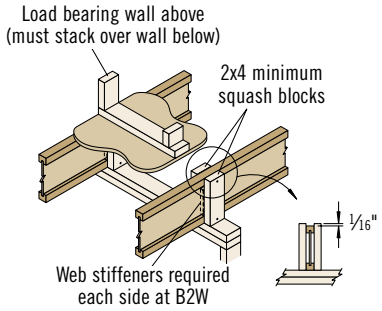

B2 B2W ***Blocking panels may be required with shear walls above or below—see detail B1***

Intermediate Bearing – No Load Bearing Wall Above

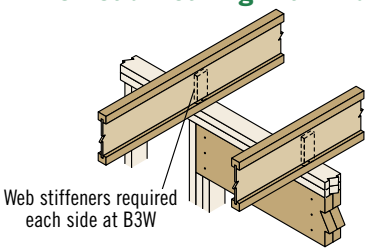

B3 B3W ***Blocking panels may be required with shear walls above or below—see detail B1***

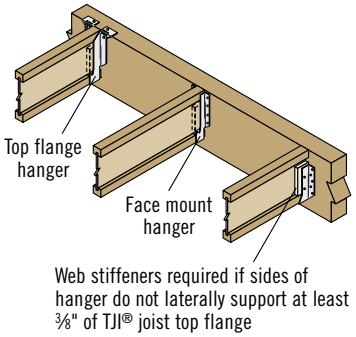

H1

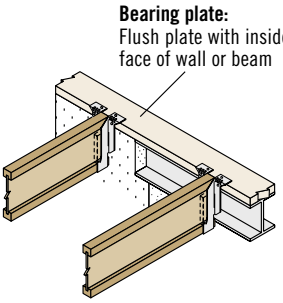

H3

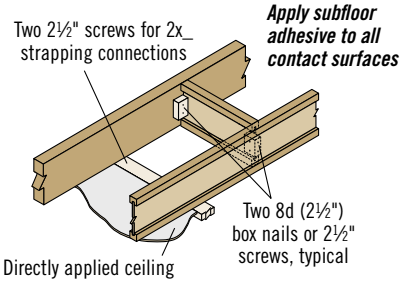

PB1 ***Required only when specified on the layout.***

Backer block: Install tight to top flange (tight to bottom flange with face mount hangers). Attach with ten 10d (3") box nails, clinched when possible.

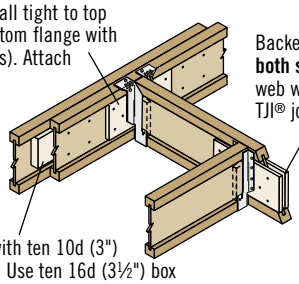

Filler block: Nail with ten 10d (3") box nails, clinched. Use ten 16d (3½") box nails from each side with TJI® 560 joists.

H2 ***With top flange hangers, backer block required only for downward loads exceeding 250 lbs or for uplift conditions***

Filler and Backer Block Sizes

TJI®	110		210		230 or 360		560	
Depth	9½" or 11⅞"	14"	9½" or 11⅞"	14" or 16"	9½" or 11⅞"	14" or 16"	11⅞"	14" or 16"
Filler Block(1) (Detail H2)	2x6	2x8	2x6 + ⅜" sheathing	2x8 + ⅜" sheathing	2x6 + ½" sheathing	2x8 + ½" sheathing	Two 2x6	Two 2x8
Cantilever Filler (Detail E4)	2x6 4'-0" long	2x10 6'-0" long	2x6 + ⅜" sheathing 4'-0" long	2x10 + ⅜" sheathing 6'-0" long	2x6 + ½" sheathing 4'-0" long	2x10 + ½" sheathing 6'-0" long	Not applicable	
Backer Block(1) (Detail F1 or H2)	⅝" or ¾"		¾" or ⅞"		1" net		2x6	2x8

(1) If necessary, increase filler and backer block height for face mount hangers and maintain ⅛" gap at top of joist. See detail W. Filler and backer block dimensions should accommodate required nailing without splitting. The suggested minimum length is 24" for filler and 12" for backer blocks.

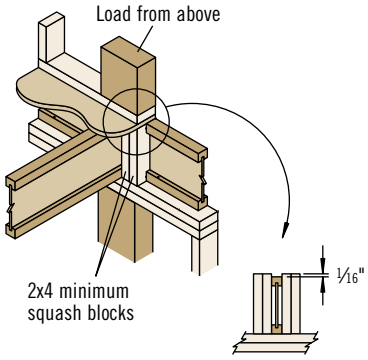

CS ***Use 2x4 minimum squash blocks to transfer load around TJI® joist***

Fastening of Floor Panels to TJI® Joist Flanges and 1¼" TimberStrand® LSL or 1⅛" iLevel™ Rim Board

Nail Size	Closest On-Center Spacing per Row			
	TJI®		Rim Board	
	110 and 210	230, 360, and 560	1⅛"	1¼"
8d (0.113" x 2½") box	2½"	2"	6"	4"
8d (0.131" x 2½") common	3½"	2"	6"	4"
10d (0.128" x 3"), 12d (0.128" x 3¼") box	3"	2"	6"	4"
10d (0.148" x 3"), 12d (0.148" x 3¼") common	4½"	3"	6"	4"
16d (0.162" x 3½") common	N.A.	4"	16"	6"(1)

(1) Can be reduced to 4" on-center with maximum nail penetration of 1⅜" into the narrow edge.

General Notes

- Maximum spacing of nails is 18" on-center for TJI® 110 joists, and 24" on-center for TJI® 210, 230, 360, and 560 joists.
- If more than one row of nails is used, the rows must be offset at least ½" and staggered.
- 14 ga. staples may be substituted for 8d (2½") nails if minimum penetration of 1" is achieved.
- Table also applies for the attachment of TJI® rim joists and blocking panels to the wall plate.

Also see nailing requirements on page 8

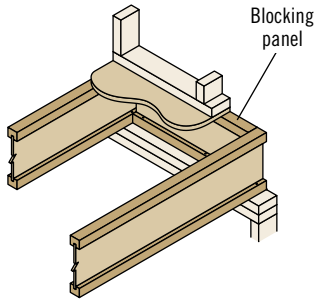

A1

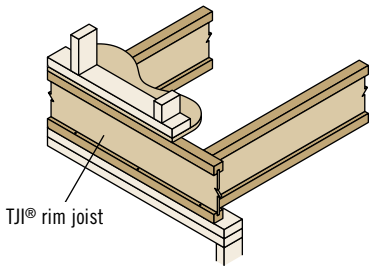

A2

Exterior Deck Attachment

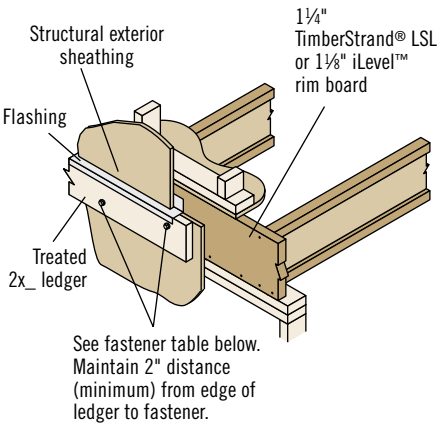

Fastener	Allowable Load (lbs)(1)	
	1¼" TimberStrand® LSL Rim Board	1⅛" iLevel™ Rim Board
⅜" lag bolt	400	N.A.
½" lag bolt	475	400

(1) Allowable load determined in accordance with AC 124.

(2) Corrosion-resistant fasteners required for wet-service applications.

LA

Rim board is often an important structural link in the ability of a home to resist lateral wind loads. It also transfers vertical load around the TJI® joists.

Rim board detail A3 (shown below) satisfies conventional construction requirements. But if your project requires a designed solution, see our iLevel ***Rim Board Specifier's Guide for Lateral Wind Loads***. This easy-to-use design guide for specifiers and code officials goes beyond conventional construction guidelines—which were based on the smaller, simpler homes of the past—and provides design information that considers today's larger, more complex homes.

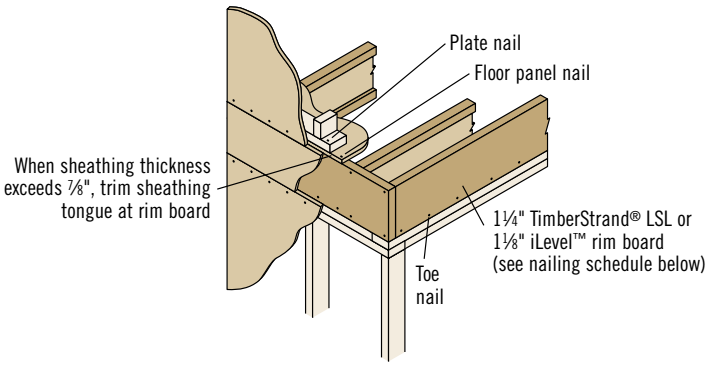

A3 A3.1 A3.2 A3.3

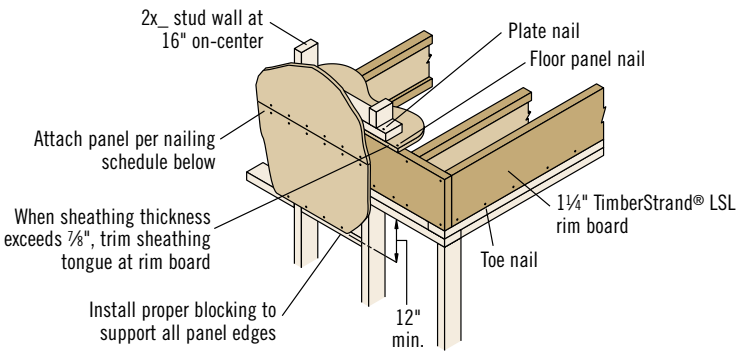

A3.4

Rim Board Installation

Specifications	A3 Conventional Construction, Code Minimum	A3.1, A3.2, A3.3, A3.4 Designed Solution
Rim Board Thickness	1⅛" or 1¼"	See the iLevel *Rim Board Specifier's Guide for Lateral Wind Loads*
Plate Nail—16d (3½") box	16" o.c.	
Floor Panel Nail—8d (2½") common	6" o.c.	
Toe Nail—10d (3") box	6" o.c.	
Sill Plate Anchor Bolt	½" dia. at 6' o.c.	
Wall Sheathing	Per code	

Vertical Load Transfer at Bearing

Allowable Uniform Vertical Loads (PLF)	
TJI® rim joist or blocking	2,100
1¼" TimberStrand® LSL rim board or blocking	4,250
1⅛" iLevel™ rim board or blocking	4,000

Loads may not be increased for duration of load.

Also see nailing requirements on page 8

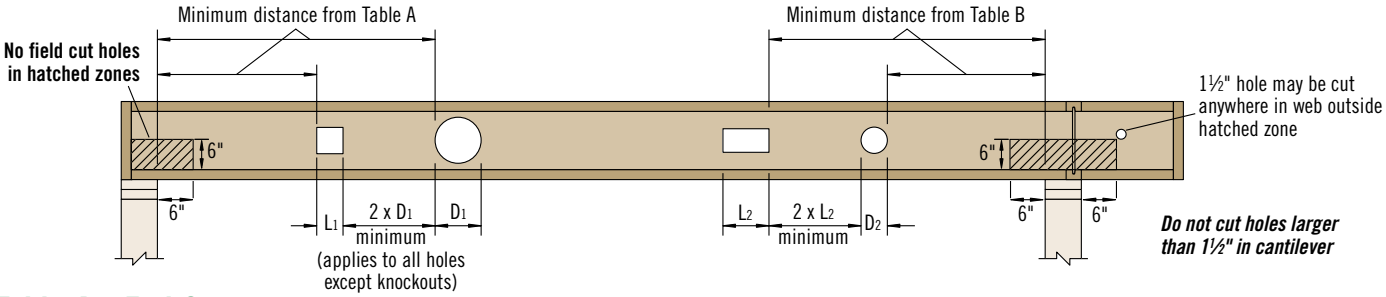

Table A—End Support

Minimum distance from edge of hole to inside face of nearest end support

Depth	TJI®	Round Hole Size									Square or Rectangular Hole Size								
		2"	3"	4"	5"	6½"	7"	8⅞"	11"	13"	2"	3"	4"	5"	6½"	7"	8⅞"	11"	13"
9½"	110	1'-0"	1'-6"	2'-0"	2'-6"	5'-0"					1'-0"	1'-6"	2'-6"	3'-6"	4'-6"				
	210	1'-0"	1'-6"	2'-0"	3'-0"	5'-0"					1'-0"	2'-0"	2'-6"	4'-0"	5'-0"				
	230	1'-0"	2'-0"	2'-6"	3'-6"	5'-6"					1'-0"	2'-0"	3'-0"	4'-6"	5'-0"				
11⅞"	110	1'-0"	1'-0"	1'-0"	1'-0"	2'-6"	2'-6"	5'-0"			1'-0"	1'-0"	1'-6"	2'-6"	4'-6"	4'-6"	6'-0"		
	210	1'-0"	1'-0"	1'-0"	1'-6"	2'-6"	3'-0"	5'-6"			1'-0"	1'-0"	2'-0"	3'-0"	5'-0"	5'-6"	6'-6"		
	230	1'-0"	1'-0"	1'-0"	2'-0"	3'-0"	3'-6"	6'-0"			1'-0"	1'-0"	2'-0"	3'-0"	5'-6"	5'-6"	7'-0"		
	360	1'-0"	1'-0"	1'-6"	2'-6"	4'-6"	5'-0"	7'-0"			1'-0"	1'-0"	2'-6"	4'-0"	6'-6"	6'-6"	7'-6"		
	560	1'-0"	1'-0"	1'-6"	3'-0"	5'-0"	5'-6"	8'-0"			1'-0"	2'-0"	3'-6"	5'-0"	7'-0"	7'-6"	8'-0"		
14"	110	1'-0"	1'-0"	1'-0"	1'-0"	1'-0"	1'-0"	2'-6"	5'-0"		1'-0"	1'-0"	1'-0"	1'-6"	3'-6"	4'-0"	6'-0"	8'-0"	
	210	1'-0"	1'-0"	1'-0"	1'-0"	1'-0"	1'-6"	3'-0"	6'-0"		1'-0"	1'-0"	1'-0"	2'-0"	4'-0"	4'-6"	6'-6"	8'-6"	
	230	1'-0"	1'-0"	1'-0"	1'-0"	1'-6"	2'-0"	3'-6"	6'-6"		1'-0"	1'-0"	1'-0"	2'-0"	4'-0"	5'-0"	7'-0"	9'-0"	
	360	1'-0"	1'-0"	1'-0"	1'-0"	2'-6"	3'-0"	5'-6"	8'-0"		1'-0"	1'-0"	1'-0"	2'-6"	5'-6"	6'-6"	8'-0"	9'-6"	
	560	1'-0"	1'-0"	1'-0"	1'-0"	2'-6"	3'-0"	6'-0"	9'-0"		1'-0"	1'-0"	1'-6"	3'-6"	6'-6"	7'-0"	9'-0"	10'-0"	
16"	210	1'-0"	1'-0"	1'-0"	1'-0"	1'-0"	1'-0"	1'-6"	3'-6"	6'-0"	1'-0"	1'-0"	1'-0"	1'-0"	2'-6"	3'-6"	6'-6"	8'-0"	10'-6"
	230	1'-0"	1'-0"	1'-0"	1'-0"	1'-0"	1'-0"	2'-0"	4'-0"	6'-6"	1'-0"	1'-0"	1'-0"	1'-0"	3'-0"	3'-6"	7'-0"	9'-0"	11'-0"
	360	1'-0"	1'-0"	1'-0"	1'-0"	1'-0"	1'-0"	3'-0"	6'-0"	9'-0"	1'-0"	1'-0"	1'-0"	1'-0"	4'-0"	5'-0"	9'-0"	10'-0"	11'-6"
	560	1'-0"	1'-0"	1'-0"	1'-0"	1'-0"	1'-0"	3'-0"	6'-6"	10'-0"	1'-0"	1'-0"	1'-0"	1'-6"	5'-0"	6'-0"	10'-0"	11'-0"	12'-0"

Table B—Intermediate or Cantilever Support

Minimum distance from edge of hole to inside face of nearest intermediate or cantilever support

Depth	TJI®	Round Hole Size									Square or Rectangular Hole Size								
		2"	3"	4"	5"	6½"	7"	8⅞"	11"	13"	2"	3"	4"	5"	6½"	7"	8⅞"	11"	13"
9½"	110	1'-6"	2'-6"	3'-0"	4'-0"	7'-6"					1'-6"	2'-6"	3'-6"	5'-6"	6'-6"				
	210	2'-0"	2'-6"	3'-6"	4'-6"	7'-6"					2'-0"	3'-0"	4'-0"	6'-0"	7'-0"				
	230	2'-6"	3'-0"	4'-0"	5'-0"	8'-0"					2'-6"	3'-0"	4'-6"	6'-6"	7'-6"				
11⅞"	110	1'-0"	1'-0"	1'-6"	2'-6"	4'-0"	4'-0"	8'-0"			1'-0"	1'-6"	2'-6"	4'-0"	6'-6"	7'-0"	9'-0"		
	210	1'-0"	1'-0"	2'-0"	3'-0"	4'-6"	5'-0"	9'-0"			1'-0"	2'-0"	3'-0"	4'-6"	7'-6"	8'-0"	10'-0"		
	230	1'-0"	2'-0"	2'-6"	3'-6"	5'-0"	5'-6"	9'-6"			1'-0"	2'-6"	3'-6"	5'-0"	8'-0"	8'-6"	10'-0"		
	360	2'-0"	3'-0"	4'-0"	5'-6"	7'-0"	7'-6"	11'-0"			2'-0"	3'-6"	5'-0"	7'-0"	9'-6"	9'-6"	11'-0"		
	560	1'-6"	3'-0"	4'-6"	5'-6"	8'-0"	8'-6"	12'-0"			3'-0"	4'-6"	6'-0"	8'-0"	10'-6"	11'-0"	12'-0"		
14"	110	1'-0"	1'-0"	1'-0"	1'-0"	2'-0"	2'-6"	4'-6"	8'-0"		1'-0"	1'-0"	1'-0"	2'-6"	5'-0"	6'-0"	9'-0"	12'-0"	
	210	1'-0"	1'-0"	1'-0"	1'-0"	2'-6"	3'-0"	5'-0"	9'-0"		1'-0"	1'-0"	2'-0"	3'-6"	6'-0"	7'-0"	10'-0"	12'-6"	
	230	1'-0"	1'-0"	1'-0"	2'-0"	3'-0"	3'-6"	5'-6"	10'-0"		1'-0"	1'-0"	2'-6"	4'-0"	6'-0"	7'-6"	10'-6"	13'-0"	
	360	1'-0"	1'-0"	2'-0"	3'-6"	5'-6"	6'-0"	8'-6"	12'-6"		1'-0"	2'-0"	4'-0"	5'-6"	9'-0"	10'-0"	12'-0"	14'-0"	
	560	1'-0"	1'-0"	1'-6"	3'-6"	5'-6"	6'-6"	9'-6"	13'-6"		1'-0"	3'-0"	5'-0"	7'-0"	10'-0"	11'-0"	13'-6"	15'-0"	
16"	210	1'-0"	1'-0"	1'-0"	1'-0"	1'-0"	1'-0"	3'-0"	5'-6"	9'-6"	1'-0"	1'-0"	1'-0"	2'-0"	4'-6"	5'-6"	9'-6"	12'-6"	15'-6"
	230	1'-0"	1'-0"	1'-0"	1'-0"	1'-6"	2'-0"	4'-0"	6'-6"	10'-6"	1'-0"	1'-0"	1'-0"	2'-6"	5'-0"	6'-0"	10'-6"	13'-0"	16'-0"
	360	1'-0"	1'-0"	1'-0"	1'-0"	3'-0"	4'-0"	6'-6"	10'-0"	13'-6"	1'-0"	1'-0"	2'-0"	4'-0"	7'-6"	8'-6"	13'-0"	14'-6"	17'-0"
	560	1'-0"	1'-0"	1'-0"	1'-0"	2'-6"	3'-6"	7'-0"	11'-0"	15'-0"	1'-0"	1'-0"	3'-6"	5'-6"	9'-0"	10'-0"	14'-6"	16'-0"	18'-0"

Rectangular holes based on measurement of longest side.

How to Use These Tables

1. Using **Table A—End Support, Table B—Intermediate or Cantilever Support**, or both, determine the hole shape/size and select the TJI® joist and depth.
2. Scan horizontally until you intersect the correct hole size column.
3. Measurement shown is minimum distance from edge of hole to support.
4. Place the hole so that the required minimum distance from the end **and** the intermediate or cantilever support is maintained.

General Notes

- Holes may be located vertically anywhere within the web. Leave ⅛" of web (minimum) at top and bottom of hole.
- Knockouts are located in web at approximately 12" on-center; they do not affect hole placement.
- For simple span (5' minimum) uniformly loaded joists meeting the requirements of this guide, one maximum size round hole may be located at the center of the joist span **provided that no other holes occur in the joist.**
- Distances are based on the maximum uniform loads shown in this guide. For other load conditions or hole configurations, use TJ-Beam® software or contact your iLevel representative.

DO NOT cut or notch flange.

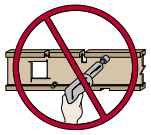

DO NOT cut holes in cantilever reinforcement.

Cantilevers Less Than 5" (Brick Ledge)
(See Section A of cantilever table on page 13)

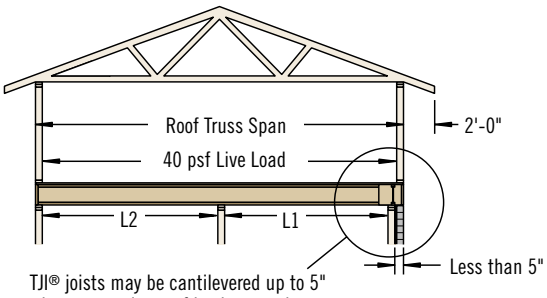

TJI® joists may be cantilevered up to 5" when supporting roof load, assuming:

- simple or continuous span
- L1 ≤ L2
- minimum backspan = 2x cantilever length

Cantilevers 5" to 24"
(See Section B of cantilever table on page 13)

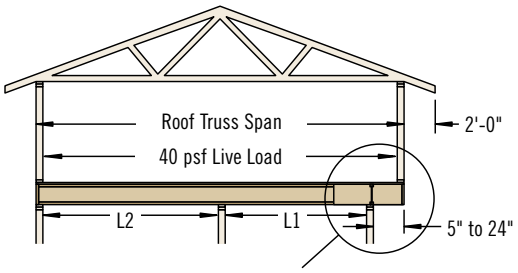

TJI® joists may be cantilevered 5" to 24" when supporting roof load, assuming:

- simple or continuous span
- L1 ≤ L2
- minimum backspan = 2x cantilever length

TJI® joists are intended for dry-use applications

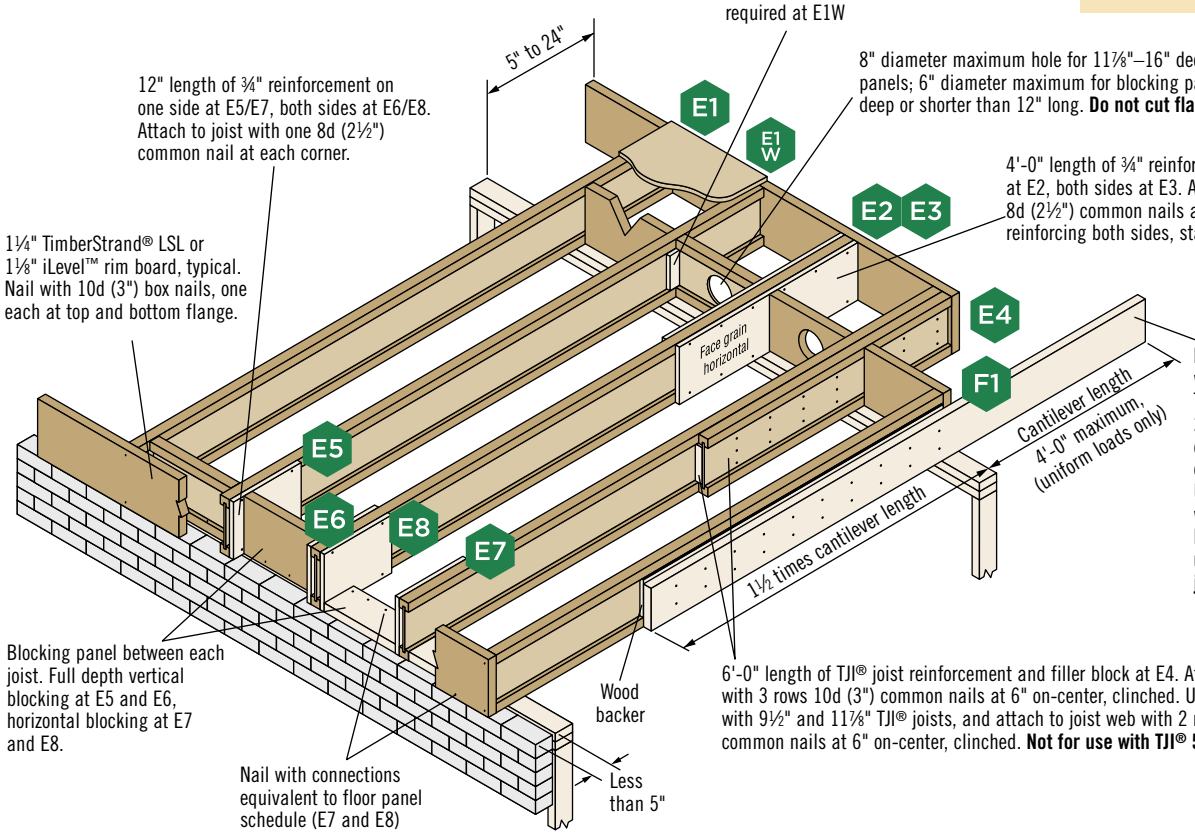

Web stiffeners required at E1W

8" diameter maximum hole for 11⅞"–16" deep blocking panels; 6" diameter maximum for blocking panels 9½" deep or shorter than 12" long. **Do not cut flanges.**

12" length of ¾" reinforcement on one side at E5/E7, both sides at E6/E8. Attach to joist with one 8d (2½") common nail at each corner.

4'-0" length of ¾" reinforcement on one side at E2, both sides at E3. Attach to joist with 8d (2½") common nails at 6" on-center. When reinforcing both sides, stagger nails.

1¼" TimberStrand® LSL or 1⅛" iLevel™ rim board, typical. Nail with 10d (3") box nails, one each at top and bottom flange.

Nail through 2x_, wood backer and TJI® joist web with 2 rows 10d (3") common nails at 6" on-center, clinched. Use 16d (3½") nails with TJI® 560 joists. **F1 applies to uniformly loaded joists only.**

Blocking panel between each joist. Full depth vertical blocking at E5 and E6, horizontal blocking at E7 and E8.

Nail with connections equivalent to floor panel schedule (E7 and E8)

6'-0" length of TJI® joist reinforcement and filler block at E4. Attach to joist web with 3 rows 10d (3") common nails at 6" on-center, clinched. Use 4'-0" length with 9½" and 11⅞" TJI® joists, and attach to joist web with 2 rows 10d (3") common nails at 6" on-center, clinched. **Not for use with TJI® 560 joists.**

These Conditions Are NOT Permitted

DO NOT bevel cut joist beyond inside face of wall.

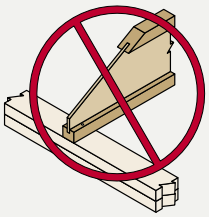

DO NOT use sawn lumber for rim board or blocking.

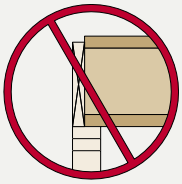

Sawn lumber may shrink after installation.

DO NOT install hanger overhanging face of plate or beam.

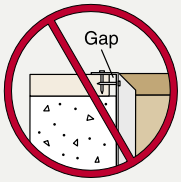

Flush bearing plate with inside face of wall or beam.

Cantilever Reinforcement

Depth	TJI®	Roof Truss Span	Section A: Cantilevers less than 5" (Brick Ledge)									Section B: Cantilevers 5" to 24"								
			Roof Total Load									Roof Total Load								
			35 PSF			45 PSF			55 PSF			35 PSF			45 PSF			55 PSF		
			On-Center Joist Spacing									On-Center Joist Spacing								
			16"	19.2"	24"	16"	19.2"	24"	16"	19.2"	24"	16"	19.2"	24"	16"	19.2"	24"	16"	19.2"	24"
9½" 11⅞" 14"	110	20'			E5		E5	E5		E5	E5						X			X
		22'			E5		E5	E5	E5	E5	E5						X		X	X
		24'		E5	E5	E5	E5	E5	E5	E5	E5						X		X	X
		26'		E5	E5	E5	E5	E5	E5	E5	E6			X		E2	X	E2	X	X
		28'		E5	X	E5	E5	X	E5	E5	X		E2	X	E2	X	X	X	X	X
		30'	E5	E5	X	E5	E5	X	E5	E5	X		E3	X	E3	X	X	X	X	X
		32'	E5	X	X	E5	X	X	E5	X	X	E2	X	X	X	X	X	X	X	X
9½" 11⅞" 14" 16"	210	20'			E5			E5		E5	E5									X
		22'			E5		E5	E5		E5	E5						E2			X
		24'			E5		E5	E5	E5	E5	E5						E2			X
		26'		E5	E5		E5	E5	E5	E5	E5						X		E2	X
		28'		E5	E5	E5	E5	E5	E5	E5	E6			E2		E2	X	E2	X	X
		30'		E5	E5	E5	E5	E5	E5	E5	E6			E3	E2	E3	X	E3	X	X
		32'	E5	E5	X	E5	E5	X	E5	E5	X		E2	X	E3	X	X	X	X	X
9½" 11⅞" 14" 16"	230	24'			E5		E5	E5	E5	E5	E5						E2			X
		26'		E5	E5		E5	E5	E5	E5	E5						E2		E2	X
		28'		E5	E5	E5	E5	E5	E5	E5	E5					E2	E3	E2	E3	X
		30'		E5	E5	E5	E5	E5	E5	E5	E5			E2		E2	X	E2	X	X
		32'	E5	E5	X	E5	E5	X	E5	E5	X		E2	E3	E2	E3	X	E3	X	X
		34'	E5	E5	X	E5	E5	X	E5	E5	X		E3	X	E3	X	X	X	X	X
11⅞" 14" 16"	360	28'			E5		E5	E5	E5	E5	E5									E2
		30'		E5	E5		E5	E5	E5	E5	E5						E1W			E2
		32'		E5	E5	E5	E5	E5	E5	E5	E5						E2			E2
		34'		E5	E5	E5	E5	E5	E5	E5	E6						E2		E1W	E3
		36'		E5	E5	E5	E5	E5	E5	E5	E6			E1W			E2		E2	E3
		38'	E5	E5	E5	E5	E5	E5	E5	E5	E6			E1W			E2		E2	E3
		40'	E5	E5	E5	E5	E5	E5	E5	E5	E6			E1W		E1W	E2		E2	E3
11⅞" 14" 16"	560	30'			E5		E5	E5		E5	E5									
		32'			E5		E5	E5	E5	E5	E5									
		34'			E5		E5	E5	E5	E5	E5									E2
		36'		E5	E5		E5	E5	E5	E5	E6									E2
		38'		E5	E5	E5	E5	E5	E5	E5	E6									E2
		40'		E5	E5	E5	E5	E5	E5	E5	E6						E1W			E2

How to Use This Table

1. Identify TJI® joist and depth.
2. Locate the **Roof Truss Span** (horizontal) that meets or exceeds your condition.
3. Identify the cantilever condition (less than 5" or 5" to 24") and locate the **Roof Total Load** and **On-Center Joist Spacing** for your application.
4. Scan down to find the appropriate cantilever detail and refer to drawing on page 12:
   – Blank cells indicate that no reinforcement is required.
   – E4 may be used in place of E2 or E3 except when using TJI® 560 joists.
   – X indicates that cantilever will not work. Use TJ-Beam® or TJ-Xpert® software, or reduce spacing of joists and recheck table.

General Notes

- Table is based on:
  – 15 psf roof dead load on a horizontal projection.
  – 80 plf exterior wall load with 3'-0" maximum width window or door openings. For larger openings, or multiple 3'-0" width openings spaced less than 6'-0" on-center, additional joists beneath the opening's trimmers may be required.
  – More restrictive of simple or continuous span.
  – Roof truss with 24" soffits.
- ¾" reinforcement refers to ¾" Exposure 1 plywood or other ¾" Exposure 1, 48/24-rated sheathing that is cut to match the full depth of the TJI® joist. Install with face grain horizontal. Reinforcing member must bear fully on the wall plate.
- Designed for 2x4 and 2x6 plate widths.
- For conditions beyond the scope of this table, including cantilevers longer than 24", use our TJ-Beam® or TJ-Xpert® software.

FIRE-SAFE CONSTRUCTION

Fire-safe construction and life safety are major concerns for everyone in the building materials and construction industry. The 2005 statistics on residential fire in the U.S. alone include 3,790 fire fatalities and an estimated $10.7 billion in property damage. These numbers underscore the seriousness of the issue and the need for fire-safe construction.

Over the past 30 years, prefabricated wood I-joists have established a record of safe and reliable performance in millions of structures. Many of these structures, such as one- or two-family residential dwellings, do not require specific fire-resistance ratings per the building codes. The following information is intended to help you specify and install iLevel™ Trus Joist® products with fire safety in mind.

Active Fire Suppression

Automatic fire sprinkler systems are commonly required by building codes in schools, office buildings, factories, and other commercial buildings. Buildings designed with sprinklers are allowed increased heights and areas over the non-sprinkler design. Residential sprinklers have not been shown to be cost effective except in limited circumstances, such as homes built for mobility-restricted occupants and new mobile homes. However, fire service agencies such as the US Fire Administration promote the use of residential sprinklers, citing benefits that include trade-offs to lower the homebuilder's total cost of construction, a safer environment, and lower insurance rates for the homeowner. Sprinklers provide the following:

- early and unsupervised suppression
- reduced fire and smoke development
- potential for enhanced life safety of occupants

Smoke Detectors

Smoke detectors are universally recognized as the most cost-effective life-saving devices. While smoke detectors do not provide protection to the structure or to the contents in a home, they do alert occupants to potential fire hazards and allow them time to escape.

Passive Fire Protection

Independent tests have proven that unprotected, lightweight framing systems—whether combustible or non-combustible—suffer serious and rapid structural degradation when exposed to heat and fire. All floor framing materials—sawn lumber, wood I-joists, trusses, and light-gauge steel—succumb quickly to fire if not protected. In fire scenarios, a protective membrane such as gypsum ceiling board will provide additional protection to the structural framing members. Passive fire-protection can do the following:

- delay fire growth involving structural elements
- reduce potential for significant property damage to structural elements
- enhance the market value of the home

Suggested Minimum Membrane Construction

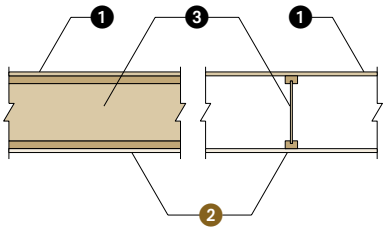

iLevel supports the idea that all floor/ceiling and roof/ceiling assemblies in habitable areas be protected by a minimum membrane protection consisting of ½" gypsum board (or equivalent)

1. 48/24 tongue-and-groove, span-rated floor panels (Exposure 1)
2. Single layer of ½" thick gypsum board
3. TJI® joists

One-Hour Rated Assembly

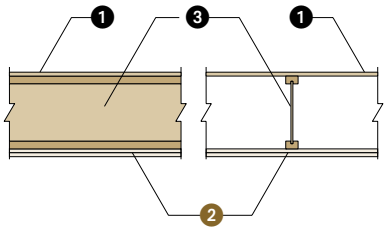

1. 48/24 tongue-and-groove, span-rated floor panels (Exposure 1)
2. Two layers of ½" thick Type X gypsum board
3. TJI® joists

For more information on fire assemblies and fire-safe construction, please refer to the iLevel Fire Facts Guide or visit www.iLevel.com and www.i-joist.com

Note:

- Resilient channels (not shown) may be installed between the joists and gypsum board if improved STC and IIC sound ratings are desired.
- Resilient channels are required when optional 3½" thick glass fiber batt insulation is being installed.

Reference: ICC ES ESR-1153

Silent Floor® joists are structurally uniform and dimensionally stable, and they resist shrinking and twisting. This helps prevent gaps from forming around the nails between the joist and the floor panels—gaps that can potentially cause squeaks or other floor noise.

Using Silent Floor® joists can help you build a quieter floor, but only if the entire floor system is installed properly. This is because other components of the floor system, such as hangers, connectors, and nails can be a source of floor noise.

To get the best possible performance out of your Silent Floor® joists and minimize potential squeaks in your floor, we recommend the following installation tips:

Properly Seat Each Joist in Hanger

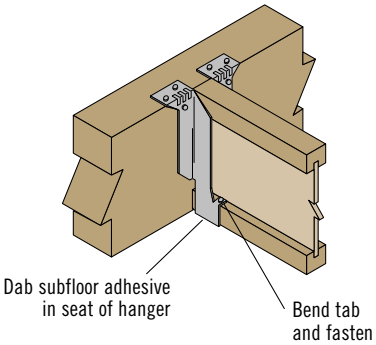

Seat the joist tight to the bottom of the hanger. When using hangers with tabs, bend the flange tabs over and nail to the TJI® joist bottom flange.

Placing a dab of subfloor adhesive in the seat of the hanger prior to installing the joist can reduce squeaks.

Use Adhesive and Special Nailing When Needed

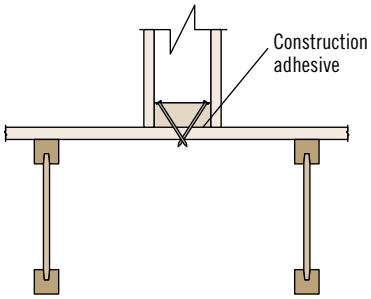

Nail interior partitions to the joists when possible. If the wall can only be nailed to the floor panel, run a bead of adhesive under the wall and either cross nail, nail through and clinch tight, or screw into the wall from below.

Prevent Shrinkage

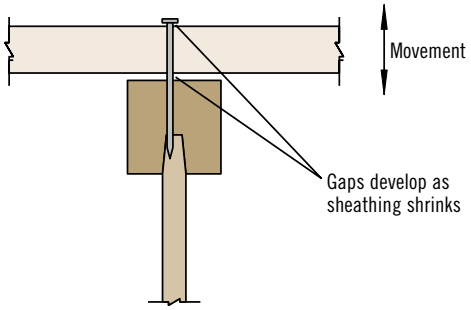

Keep building materials dry, and properly glue floor panels to the joists. Panels that become excessively wet during construction shrink as they dry. This shrinkage may leave gaps that allow the panel to move when stepped on.

Avoid "Shiners"

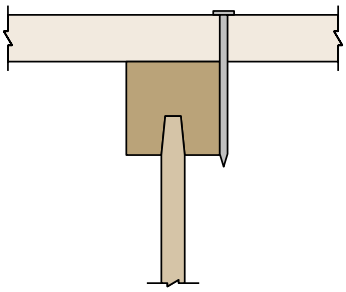

Exercise care when nailing. Nails that barely hit the joists (shiners) do not hold the panel tight to the joist and should be removed. If left in, the nails will rub against the side of the joist when the panel deflects.

For more information and tips on how to prevent floor noise, refer to the Field Guide for Prevention and Repair of Squeaks or contact your iLevel representative.

ROOF SPAN TABLE

Maximum Horizontal Clear Spans—Roof

O.C. Spacing	Depth	TJI®	Design Live Load (LL) and Dead Load (DL) in PSF											
			Non-Snow (125%)				Snow Load Area (115%)							
			20LL + 15DL		20LL + 20DL		25LL + 15DL		30LL + 15DL		40LL + 15DL		50LL + 15DL	
			Low	High	Low	High	Low	High	Low	High	Low	High	Low	High
16"	9½"	110	19'-3"	17'-2"	18'-4"	16'-3"	18'-5"	16'-6"	17'-9"	15'-11"	16'-7"	15'- 0"	15'-6"	14'-3"
		210	20'-5"	18'-2"	19'-5"	17'-3"	19'-6"	17'-6"	18'-9"	16'-11"	17'-7"	15'-11"	16'-7"	15'-1"
		230	21'-0"	18'-9"	20'-0"	17'-9"	20'-2"	18'-0"	19'-4"	17'-5"	18'-1"	16'-4"	17'-1"	15'-6"
	11⅞"	110	23'-0"	20'-6"	21'-11"	19'-5"	22'-0"	19'-9"	20'-11"	19'-1"	19'- 0"	17'-11"	17'-6"	16'-11"
		210	24'-4"	21'-9"	23'-3"	20'-7"	23'-4"	20'-11"	22'-5"	20'-2"	20'-10"	19'- 0"	19'-2"	18'-0"
		230	25'-1"	22'-5"	23'-11"	21'-3"	24'-1"	21'-7"	23'-1"	20'-10"	21'-7"	19'-7"	20'-3"	18'-7"
		360	27'-9"	24'-9"	26'-5"	23'-5"	26'-7"	23'-10"	25'-6"	23'- 0"	23'-11"	21'-7"	22'-7"	20'-6"
		560	31'-11"	28'-6"	30'-5"	27'- 0"	30'-7"	27'-5"	29'-5"	26'-5"	27'-6"	24'-10"	26'- 0"	23'-7"
	14"	110	26'-3"	23'-5"	25'- 0"	22'-2"	24'-1"	22'-6"	22'-9"	21'-9"	20'-8"	19'-11"	19'-1"	18'-5"
		210	27'-9"	24'-9"	26'-5"	23'-5"	26'-5"	23'-9"	25'- 0"	22'-11"	22'-8"	21'-7"	20'-11"	20'-3"
		230	28'-7"	25'-6"	27'-2"	24'-2"	27'-4"	24'-6"	26'-4"	23'-8"	23'-11"	22'-3"	22'-0"	21'-1"
		360	31'-6"	28'-2"	30'-0"	26'-8"	30'-2"	27'-1"	29'-0"	26'-1"	27'-2"	24'-7"	25'-8"	23'-4"
		560	36'-3"	32'-4"	34'-6"	30'-7"	34'-8"	31'-1"	33'-4"	30'-0"	31'-2"	28'-3"	29'-6"	26'-9"
	16"	210	30'-9"	27'-5"	29'-4"	26'- 0"	28'-3"	26'-5"	26'-9"	25'-6"	24'-3"	23'-4"	22'-4"	21'-8"
		230	31'-8"	28'-3"	30'-2"	26'-9"	29'-10"	27'-2"	28'-2"	26'-3"	25'-7"	24'-7"	23'-7"	22'-10"
		360	34'-11"	31'-2"	33'-3"	29'-6"	33'-5"	30'- 0"	32'-2"	28'-11"	30'-1"	27'-2"	26'- 0"	25'-10"
		560	40'-1"	35'-9"	38'-2"	33'-11"	38'-4"	34'-5"	36'-11"	33'-2"	34'-6"	31'-3"	31'-8"	29'-8"
19.2"	9½"	110	18'-1"	16'-1"	17'-3"	15'-3"	17'-4"	15'-6"	16'-8"	15'- 0"	15'-5"	14'-1"	14'-2"	13'-4"
		210	19'-2"	17'-1"	18'-3"	16'-2"	18'-4"	16'-5"	17'-8"	15'-10"	16'-6"	14'-11"	15'-7"	14'-2"
		230	19'-9"	17'-7"	18'-10"	16'-8"	18'-11"	16'-11"	18'-2"	16'-4"	17'- 0"	15'-4"	16'-1"	14'-7"
	11⅞"	110	21'-7"	19'-3"	20'-7"	18'-3"	20'-3"	18'-6"	19'-1"	17'-11"	17'-4"	16'-8"	16'- 0"	15'-5"
		210	22'-11"	20'-5"	21'-10"	19'-4"	21'-11"	19'-8"	20'-11"	18'-11"	19'-0"	17'-10"	17'-6"	16'-11"
		230	23'-7"	21'-1"	22'-6"	19'-11"	22'-7"	20'-3"	21'-8"	19'-6"	20'-0"	18'-4"	18'-5"	17'-5"
		360	26'-1"	23'-3"	24'-10"	22'-0"	24'-11"	22'-4"	24'- 0"	21'-7"	22'-5"	20'-3"	21'-2"	19'-3"
		560	30'- 0"	26'-9"	28'-7"	25'-4"	28'-8"	25'-9"	27'-7"	24'-10"	25'-9"	23'-4"	24'-4"	22'-2"
	14"	110	24'-6"	22'- 0"	22'-9"	20'-10"	22'-0"	20'-11"	20'-9"	19'-10"	18'-10"	18'-2"	17'- 0"	16'-10"
		210	26'-0"	23'-3"	24'-10"	22'-0"	24'-2"	22'-4"	22'-10"	21'-7"	20'-8"	19'-11"	18'-10"	18'-5"
		230	26'-10"	23'-11"	25'-7"	22'-8"	25'-5"	23'-0"	24'-0"	22'-3"	21'-10"	20'-11"	20'-1"	19'-5"
		360	29'-7"	26'-5"	28'-2"	25'-0"	28'-4"	25'-5"	27'-3"	24'-6"	25'-6"	23'-1"	21'-7"	21'-8"
		560	34'-0"	30'-4"	32'-5"	28'-9"	32'-7"	29'-2"	31'-4"	28'-2"	29'-3"	26'-6"	26'-5"	25'-2"
	16"	210	28'-8"	25'-9"	26'-9"	24'-5"	25'-10"	24'-6"	24'-5"	23'-4"	22'-1"	21'-4"	18'-10"	19'-8"
		230	29'-9"	26'-7"	28'-2"	25'-2"	27'-3"	25'-6"	25'-9"	24'-7"	23'-4"	22'-6"	21'-2"	20'-9"
		360	32'-10"	29'-3"	31'-3"	27'-9"	31'-5"	28'-2"	30'-2"	27'-2"	25'-7"	25'-3"	21'-7"	21'-8"
		560	37'-8"	33'-7"	35'-10"	31'-10"	36'-0"	32'-4"	34'-8"	31'-2"	31'-3"	29'-4"	26'-5"	25'-5"
24"	9½"	110	16'-9"	14'-11"	15'-11"	14'-2"	16'-0"	14'-4"	15'-2"	13'-10"	13'-9"	13'-0"	12'-8"	12'-3"
		210	17'-9"	15'-10"	16'-11"	15'- 0"	17'- 0"	15'-3"	16'-4"	14'-8"	15'-1"	13'-10"	13'-11"	13'-1"
		230	18'-3"	16'-4"	17'-5"	15'-5"	17'-6"	15'-8"	16'-10"	15'-2"	15'-8"	14'-3"	14'-8"	13'-6"
	11⅞"	110	20'-0"	17'-10"	18'-9"	16'-11"	18'-1"	17'-2"	17'-1"	16'-4"	15'-6"	14'-11"	13'-7"	13'-10"
		210	21'-2"	18'-11"	20'-2"	17'-11"	19'-10"	18'-2"	18'-9"	17'-7"	17'- 0"	16'-4"	15'-0"	15'-2"
		230	21'-10"	19'-6"	20'-10"	18'-5"	20'-11"	18'-9"	19'-9"	18'-1"	17'-11"	17'- 0"	16'-6"	16'- 0"
		360	24'-1"	21'-6"	23'- 0"	20'-5"	23'-1"	20'-8"	22'-2"	20'- 0"	20'-5"	18'-9"	17'-3"	17'-4"
		560	27'-9"	24'-9"	26'-5"	23'-6"	26'-7"	23'-10"	25'-6"	23'- 0"	23'-10"	21'-7"	21'-1"	20'-3"
	14"	110	21'-10"	20'-4"	20'-4"	19'-1"	19'-8"	18'-8"	18'-7"	17'-9"	16'-0"	16'-3"	13'-7"	14'-2"
		210	24'- 0"	21'-6"	22'-4"	20'-5"	21'-7"	20'-6"	20'-4"	19'-6"	17'-10"	17'-9"	15'-0"	15'-8"
		230	24'-10"	22'-2"	23'-7"	21'- 0"	22'-9"	21'-4"	21'-6"	20'-6"	19'-6"	18'-9"	16'-11"	16'-7"
		360	27'-5"	24'-6"	26'-1"	23'-2"	26'-3"	23'-6"	25'-0"	22'-8"	20'-5"	20'-2"	17'-3"	17'-4"
		560	31'-6"	28'-1"	30'- 0"	26'-8"	30'-2"	27'-0"	29'- 0"	26'-1"	24'-11"	23'-7"	21'-1"	20'-3"
	16"	210	25'-8"	23'-11"	23'-11"	22'-4"	23'-1"	21'-11"	21'-9"	20'-10"	17'-10"	18'-3"	15'-0"	15'-8"
		230	27'-1"	24'-7"	25'-2"	23'-3"	24'-4"	23'-1"	23'- 0"	22'- 0"	20'-0"	19'-4"	16'-11"	16'-7"
		360	30'-4"	27'-1"	28'-11"	25'-8"	28'-2"	26'-1"	25'-0"	24'-1"	20'-5"	20'-2"	17'-3"	17'-4"
		560	34'-10"	31'-2"	33'-2"	29'-6"	33'-4"	29'-11"	30'-6"	28'-3"	24'-11"	23'-7"	21'-1"	20'-3"

See page 17 for General Notes and information on how to use this table

How to Use Roof Span Table on Page 16

1. Determine appropriate live and dead load, and the load duration factor.
2. If your slope is 6/12 or less use the **Low** slope column. If it is between 6/12 and 12/12 use the **High** column.
3. Scan down the column until you find a span that meets or exceeds the span of your application.
4. Select TJI® joist and on-center spacing.

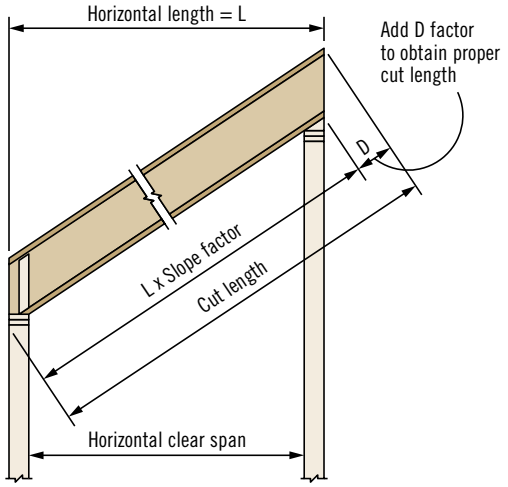

Actual cut length can be approximated by multiplying the horizontal length by the slope factor and adding the D factor.

General Notes

- Table is based on:
  - Uniform loads.
  - More restrictive of simple or continuous span.
  - Minimum roof surface slope of ¼" in 12".
  - 1¾" minimum end bearing and 3½" minimum intermediate bearing.
- Total load limits joist deflection to L/180.
- Live load is based on joist deflection of L/240.
- A support beam or wall at the high end is required (ridge board applications do not provide adequate support).
- Spans shown assume no web stiffeners at intermediate bearings.

D Factors

Depth	Slope												
	2½ in 12	3 in 12	3½ in 12	4 in 12	4½ in 12	5 in 12	6 in 12	7 in 12	8 in 12	9 in 12	10 in 12	11 in 12	12 in 12
9½"	2"	2⅜"	2⅞"	3¼"	3⅝"	4"	4¾"	5⅝"	6⅜"	7⅛"	8"	8¾"	9½"
11⅞"	2½"	3"	3½"	4"	4½"	5"	6"	7"	8"	9"	10"	11"	11⅞"
14"	3"	3½"	4⅛"	4¾"	5¼"	5⅞"	7"	8¼"	9⅜"	10½"	11¾"	12⅞"	14"
16"	3⅜"	4"	4¾"	5⅜"	6"	6¾"	8"	9⅜"	10¾"	12"	13⅜"	14¾"	16"

Slope Factors

Slope	2½ in 12	3 in 12	3½ in 12	4 in 12	4½ in 12	5 in 12	6 in 12	7 in 12	8 in 12	9 in 12	10 in 12	11 in 12	12 in 12
Factor	1.021	1.031	1.042	1.054	1.068	1.083	1.118	1.158	1.202	1.250	1.302	1.357	1.414

WARNING
Joists are unstable until laterally braced.
See Warning Notes on page 5.

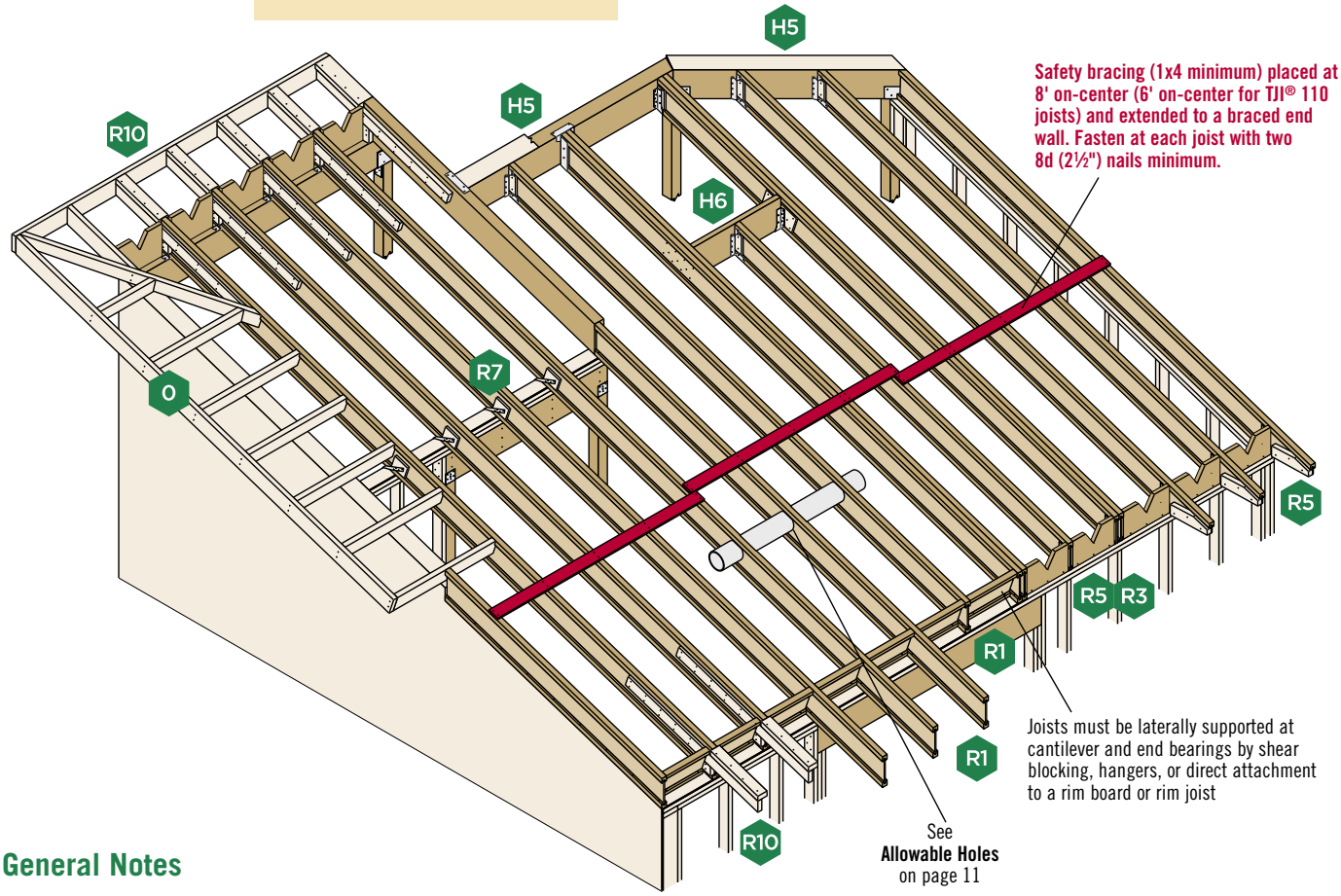

General Notes

- Unless otherwise noted, all details are valid to a maximum slope of 12/12.
- Web stiffeners are required if the sides of the hanger do not laterally support at least ⅜" of the TJI® joist top flange.

TJI® Joist Nailing Requirements at Bearing

TJI® Joist to Bearing Plate

End Bearing
(1¾" minimum bearing required)

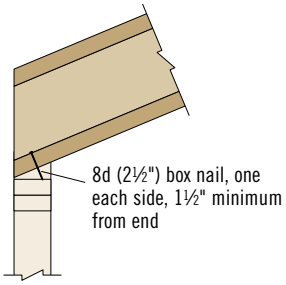

Intermediate Bearing
(3½" minimum bearing required)

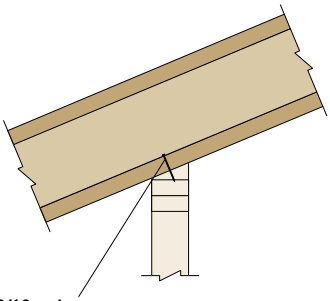

Slopes 3/12 or less:
One 8d (2½") box nail each side. See detail R7.

Slopes greater than 3/12:
Two 8d (2½") box nails each side, plus a twist strap and backer block. See detail R7S.

When slope exceeds ¼" per foot, a beveled bearing plate, variable slope seat connector, or birdsmouth cut (at low end of joist only) is required

Blocking to Bearing Plate

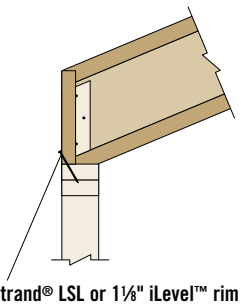

1¼" TimberStrand® LSL or 1⅛" iLevel™ rim board:
Toenail with 10d (3") box nails at 6" on-center or 16d (3½") box nails at 12" on-center

TJI® joist blocking:
10d (3") box nails at 6" on-center

Shear transfer nailing:
Use connections equivalent to sheathing nail schedule

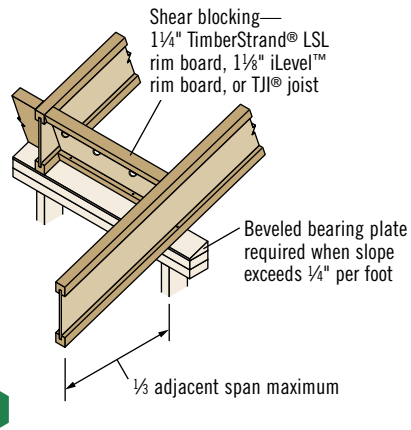

R1

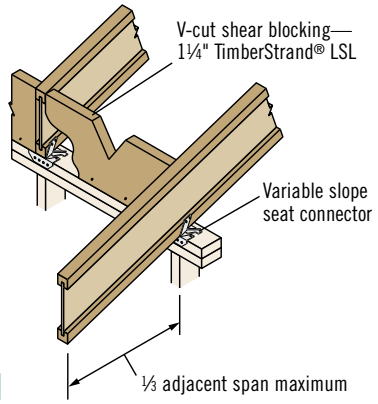

R3

Birdsmouth Cut

Allowed at low end of joist only

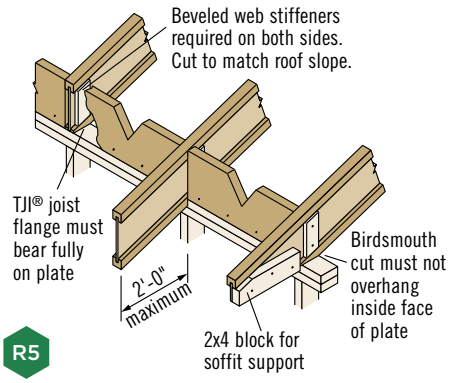

R5

Intermediate Bearing

Blocking panels or shear blocking may be specified for joist stability at intermediate supports

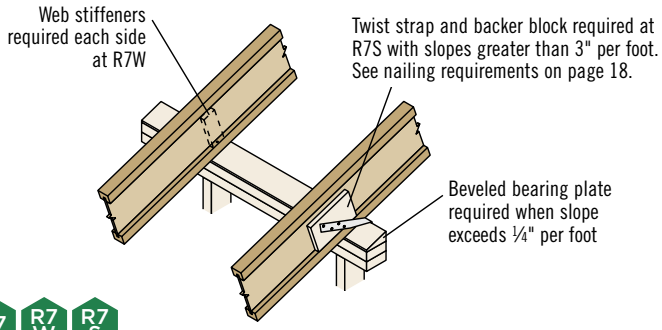

R7 R7 W R7 S

Birdsmouth Cut

Allowed at low end of joist only

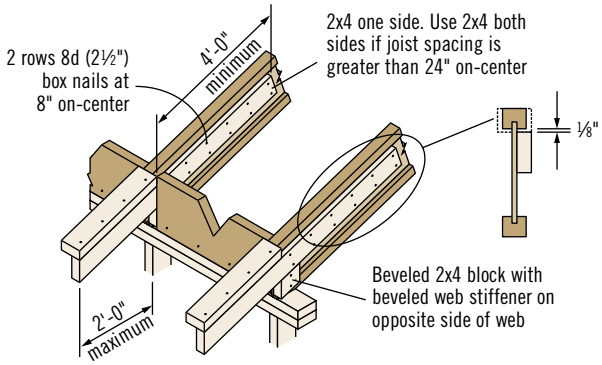

R8

Birdsmouth Cut

Allowed at low end of joist only

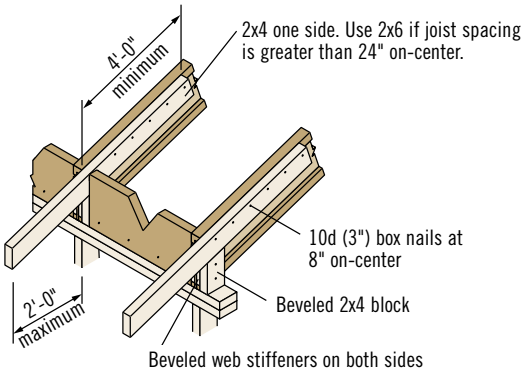

R9

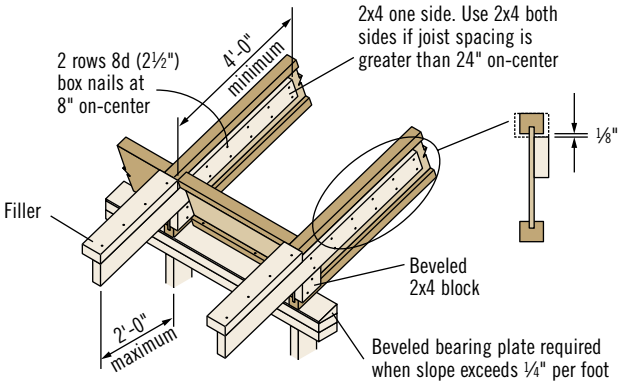

R10

These Conditions Are NOT Permitted

DO NOT cut holes too close to support.

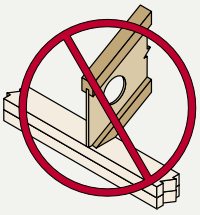

Refer to Allowable Holes on page 11 for minimum distance from support.

DO NOT bevel cut joist beyond inside face of wall.

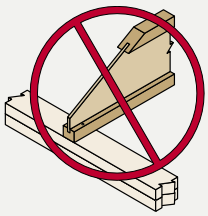

DO NOT overhang birdsmouth cut from inside face of plate.

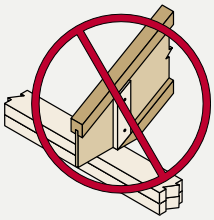

TJI® joist flange must bear fully on the plate. See detail BC on page 20.

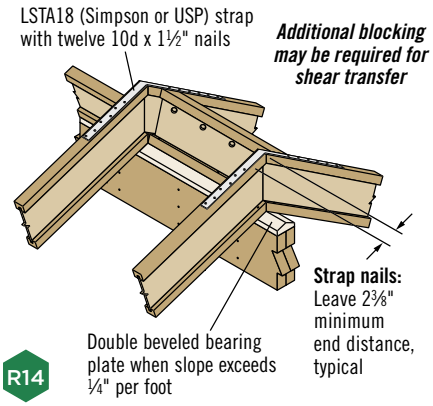

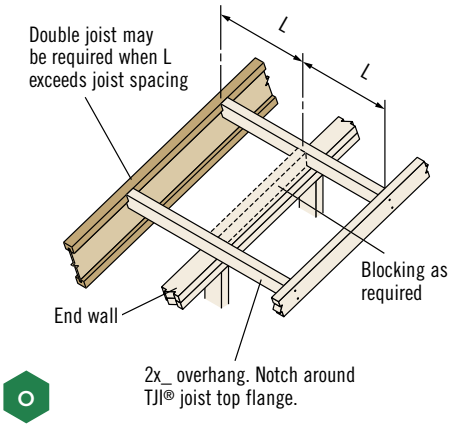

Birdsmouth Cut

Allowed at low end of joist only

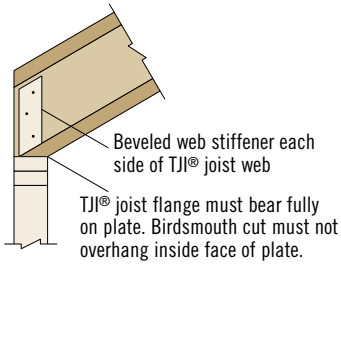

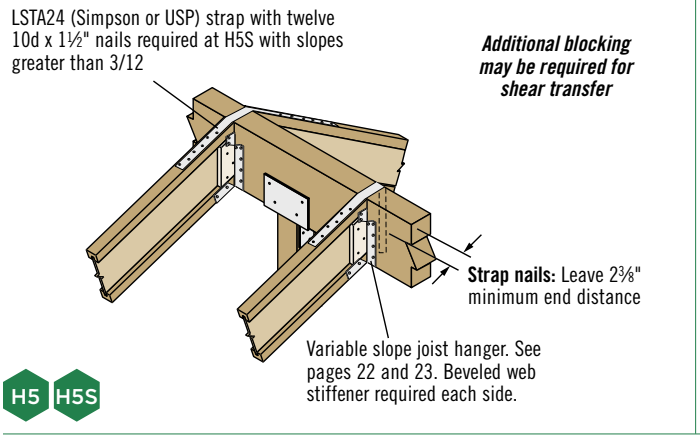

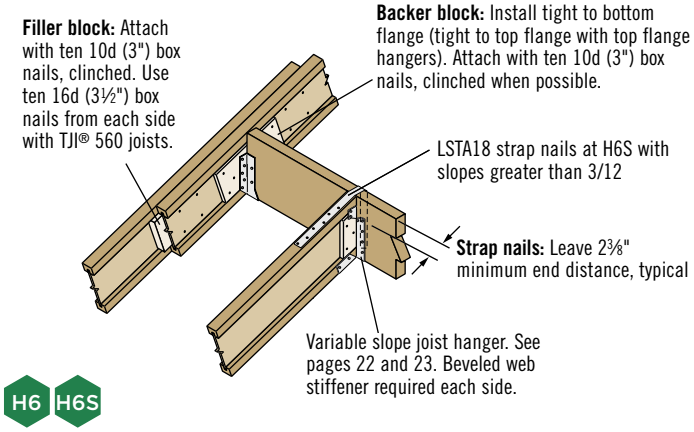

Shear Blocking and Ventilation Holes (Roof Only)

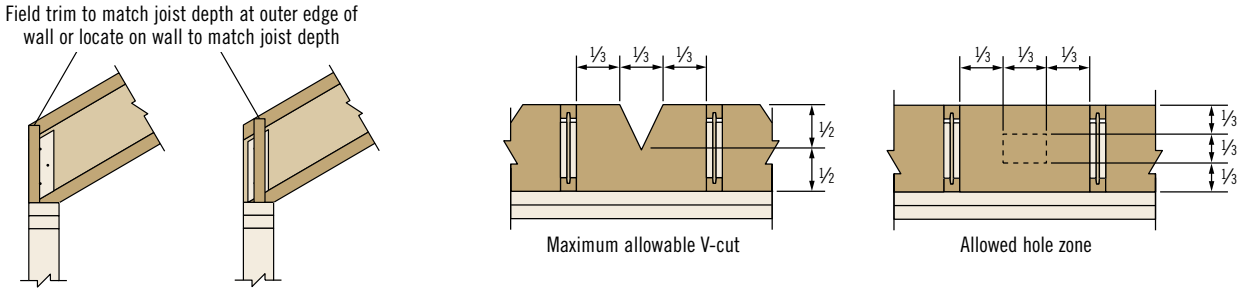

SB ***For TJI® joists with slopes of 10/12 to 12/12, the vertical depth at bearing will require 1¼" TimberStrand® LSL or 1⅛" iLevel™ rim board (for shear blocking) that is one size deeper than the TJI® joist***

Filler and Backer Block Sizes

TJI®	110		210		230 or 360		560	
Depth	9½" or 11⅞"	14"	9½" or 11⅞"	14" or 16"	9½" or 11⅞"	14" or 16"	11⅞"	14" or 16"
Filler Block (Detail H6)	2x6	2x8	2x6 + ⅜" sheathing	2x8 + ⅜" sheathing	2x6 + ½" sheathing	2x8 + ½" sheathing	Two 2x6	Two 2x8
Backer Block (Detail H6)	⅝" or ¾"		¾" or ⅞"		1" net		2x6	2x8

If necessary, increase filler and backer block height for face mount hangers and maintain ⅛" gap at top of joist. See detail W. Filler and backer block dimensions should accommodate required nailing without splitting. The suggested minimum length is 24" for filler and 12" for backer blocks.

See General Notes and nailing requirements on page 18

Roof—115% and 125% Load Duration (PLF)

Depth	TJI®	Roof Joist Horizontal Clear Span																	
		6'			8'			10'			12'			14'			16'		
		Total Load		Defl.	Total Load		Defl.	Total Load		Defl.	Total Load		Defl.	Total Load		Defl.	Total Load		Defl.
		Snow 115%	Non-Snow 125%	Live Load L/240	Snow 115%	Non-Snow 125%	Live Load L/240	Snow 115%	Non-Snow 125%	Live Load L/240	Snow 115%	Non-Snow 125%	Live Load L/240	Snow 115%	Non-Snow 125%	Live Load L/240	Snow 115%	Non-Snow 125%	Live Load L/240
9½"	110	289	314	*	218	237	*	175	190	*	146	159	155	109	118	101	83	91	69
	210	321	349	*	242	263	*	194	211	*	162	176	*	131	142	118	100	108	81
	230	360	392	*	272	295	*	218	237	*	182	198	196	145	158	128	112	118	88
11⅞"	110	289	314	*	218	237	*	175	190	*	146	159	*	125	136	*	106	115	*
	210	321	349	*	242	263	*	194	211	*	162	176	*	139	151	*	122	132	*
	230	360	392	*	272	295	*	218	237	*	182	198	*	156	170	*	137	149	146
	360	368	400	*	277	301	*	223	242	*	186	202	*	159	173	*	140	152	*
	560	449	488	*	338	368	*	272	295	*	227	246	*	195	212	*	170	185	*
14"	110	289	314	*	218	237	*	175	190	*	146	159	*	125	136	*	110	119	*
	210	321	349	*	242	263	*	194	211	*	162	176	*	139	151	*	122	132	*
	230	360	392	*	272	295	*	218	237	*	182	198	*	156	170	*	137	149	*
	360	368	400	*	277	301	*	223	242	*	186	202	*	159	173	*	140	152	*
	560	449	488	*	338	368	*	272	295	*	227	246	*	195	212	*	170	185	*
16"	210	321	349	*	242	263	*	194	211	*	162	176	*	139	151	*	122	132	*
	230	360	392	*	272	295	*	218	237	*	182	198	*	156	170	*	137	149	*
	360	368	400	*	277	301	*	223	242	*	186	202	*	159	173	*	140	152	*
	560	449	488	*	338	368	*	272	295	*	227	246	*	195	212	*	170	185	*

Depth	TJI®	Roof Joist Horizontal Clear Span																	
		18'			20'			22'			24'			26'			28'		
		Total Load		Defl.	Total Load		Defl.	Total Load		Defl.	Total Load		Defl.	Total Load		Defl.	Total Load		Defl.
		Snow 115%	Non-Snow 125%	Live Load L/240	Snow 115%	Non-Snow 125%	Live Load L/240	Snow 115%	Non-Snow 125%	Live Load L/240	Snow 115%	Non-Snow 125%	Live Load L/240	Snow 115%	Non-Snow 125%	Live Load L/240	Snow 115%	Non-Snow 125%	Live Load L/240
9½"	110																		
	210	77	77	58															
	230	84	84	63															
11⅞"	110	84	91	82															
	210	101	109	96	82	89	71												
	230	112	121	105	91	98	78	75	79	59									
	360	124	135	*	112	122	103	102	105	78	82	82	61						
	560	152	165	*	137	148	*	124	135	117	114	122	91	97	97	73	79	79	59
14"	110	98	106	*	80	87	*												
	210	108	118	*	97	105	103	80	87	79									
	230	122	132	*	107	117	112	89	96	86	75	81	67						
	360	124	135	*	112	122	*	102	111	*	93	101	88	86	94	70	76	76	57
	560	152	165	*	137	148	*	124	135	*	114	124	*	105	114	104	98	106	85
16"	210	108	118	*	97	106	*	89	96	*	77	83	*						
	230	122	132	*	110	119	*	100	108	*	85	93	90		79	72			
	360	124	135	*	112	122	*	102	111	*	93	101	*	86	94	*	80	87	76
	560	152	165	*	137	148	*	124	135	*	114	124	*	105	114	*	98	106	*

* Indicates that **Total Load** value controls.

Slope Factors

Slope	2½ in 12	3 in 12	3½ in 12	4 in 12	4½ in 12	5 in 12	6 in 12	7 in 12	8 in 12	9 in 12	10 in 12	11 in 12	12 in 12
Factor	1.021	1.031	1.042	1.054	1.068	1.083	1.118	1.158	1.202	1.250	1.302	1.357	1.414

How to Use These Tables

1. Calculate actual total load in pounds per linear foot (plf).
2. Select appropriate **Roof Joist Horizontal Clear Span**. For slopes greater than 2" per foot, approximate the increased dead load by multiplying the joist horizontal clear span by the **Slope Factor** above.
3. Scan down the column to find a TJI® joist that meets or exceeds actual total load. **Total Load** values are limited to deflection of L/180. For stiffer deflection criteria, use the **Live Load** L/240 values.

General Notes

- Tables are based on:
  - Uniform loads.
  - No composite action provided by sheathing.
  - More restrictive of simple or continuous span.
  - Minimum roof surface slope of ¼" in 12".
- **Total Load** limits joist deflection to L/180.

Joist		Single Joist—Top Flange				Single Joist—Face Mount[1]				Face Mount Skewed 45° Joist Hanger[1]			
										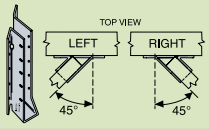			
Depth	TJI®	Hanger	Capacity (lbs)	Nailing Header	Nailing Joist	Hanger	Capacity (lbs)	Nailing Header	Nailing Joist	Hanger	Capacity (lbs)	Nailing Header	Nailing Joist
9½"	110	ITT9.5	935	10d	10d x 1½"	IUS1.81/9.5	935	10d	N.A.	***SUR/L1.81/9***	1,125	16d	10d x 1½"
	210	ITT2.1/9.5	1,030	10d	10d x 1½"	IUS2.06/9.5	935	10d	N.A.	***SUR/L2.1/9***	1,230	16d	10d x 1½"
	230	ITT359.5	1,075	10d	10d x 1½"	IUS2.37/9.5	935	10d	N.A.	***SURI/LI3510/12***	1,225	16d	10d x 1½"
11⅞"	110	ITT11.88	950	10d	10d x 1½"	IUS1.81/11.88	950	10d	N.A.	***SUR/L1.81/11***	1,215	16d	10d x 1½"
	210	ITT2.1/11.88	1,045	10d	10d x 1½"	IUS2.06/11.88	1,045	10d	N.A.	***SUR/L2.1/11***	1,305	16d	10d x 1½"
	230	ITT3511.88	1,095	10d	10d x 1½"	IUS2.37/11.88	1,095	10d	N.A.	***SURI/LI3510/12***	1,310	16d	10d x 1½"
	360	ITT3511.88	1,140	10d	10d x 1½"	IUS2.37/11.88	1,140	10d	N.A.	***SURI/LI3510/12***	1,355	16d	10d x 1½"
	560	ITT411.88	1,300	10d	10d x 1½"	IUS3.56/11.88	1,330	10d	N.A.	***SUR/L410***	1,495	16d	10d x 1½"
14"	110	ITT14	950	10d	10d x 1½"	IUS1.81/14	950	10d	N.A.	***SUR/L1.81/11***	1,215	16d	10d x 1½"
	210	ITT2.1/14	1,045	10d	10d x 1½"	IUS2.06/14	1,045	10d	N.A.	***SUR/L2.1/11***	1,305	16d	10d x 1½"
	230	ITT3514	1,095	10d	10d x 1½"	IUS2.37/14	1,095	10d	N.A.	***SURI/LI3514/20***	1,310	16d	10d x 1½"
	360	ITT3514	1,140	10d	10d x 1½"	IUS2.37/14	1,140	10d	N.A.	***SURI/LI3514/20***	1,355	16d	10d x 1½"
	560	ITT414	1,300	10d	10d x 1½"	IUS3.56/14	1,330	10d	N.A.	***SUR/L414***	1,460	16d	10d x 1½"
16"	210	ITT2.1/16	1,045	10d	10d x 1½"	IUS2.06/16	1,045	10d	N.A.	***SUR/L2.1/11***	1,045	16d	10d x 1½"
	230	MIT3516	1,215	10d	10d x 1½"	IUS2.37/16	1,095	10d	N.A.	***SURI/LI3514/20***	1,310	16d	10d x 1½"
	360	MIT3516	1,260	10d	10d x 1½"	IUS2.37/16	1,140	10d	N.A.	***SURI/LI3514/20***	1,355	16d	10d x 1½"
	560	MIT416	1,460	10d	10d x 1½"	IUS3.56/16	1,330	10d	N.A.	***SUR/L414***	1,460	16d	10d x 1½"

Joist		Double Joist—Top Flange				Double Joist—Face Mount[1]			
		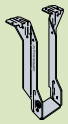				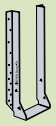			
Depth	TJI®	Hanger	Capacity (lbs)	Nailing Header	Nailing Joist	Hanger	Capacity (lbs)	Nailing Header	Nailing Joist
9½"	110	MIT49.5	2,000	16d	10d x 1½"	MIU49	1,860	16d	10d x 1½"
	210	MIT4.28/9.5	2,000	16d	10d x 1½"	MIU4.28/9	1,860	16d	10d x 1½"
	230	MIT359.5-2	2,000	16d	10d x 1½"	MIU4.75/9	1,860	16d	10d x 1½"
11⅞"	110	MIT411.88	2,000	16d	10d x 1½"	MIU411	2,130	16d	10d x 1½"
	210	MIT4.28/11.88	2,000	16d	10d x 1½"	MIU4.28/11	2,130	16d	10d x 1½"
	230	MIT3511.88-2	2,000	16d	10d x 1½"	MIU4.75/11	2,130	16d	10d x 1½"
	360	MIT3511.88-2	2,000	16d	10d x 1½"	MIU4.75/11	2,130	16d	10d x 1½"
	560	***WPI411.88-2***	2,925	16d	10d x 1½"	***HU412-2***	2,145	16d	10d x 1½"
14"	110	MIT414	2,000	16d	10d x 1½"	MIU414	2,170	16d	10d x 1½"
	210	MIT4.28/14	2,000	16d	10d x 1½"	MIU4.28/14	2,350	16d	10d x 1½"
	230	MIT3514-2	2,000	16d	10d x 1½"	MIU4.75/14	2,395	16d	10d x 1½"
	360	MIT3514-2	2,000	16d	10d x 1½"	MIU4.75/14	2,395	16d	10d x 1½"
	560	***WPI414-2***	2,925	16d	10d x 1½"	***HU414-2***	2,680	16d	10d x 1½"
16"	210	LBV4.28/16	2,035	16d	10d x 1½"	MIU4.28/16	2,350	16d	10d x 1½"
	230	LBV3516-2	2,035	16d	10d x 1½"	MIU4.75/16	2,435	16d	10d x 1½"
	360	LBV3516-2	2,035	16d	10d x 1½"	MIU4.75/16	2,525	16d	10d x 1½"
	560	***WPI416-2***	2,925	16d	10d x 1½"	***HU414-2***	2,680	16d	10d x 1½"

Joist	Variable Slope Seat Connector[2]			
	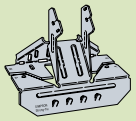			
TJI®	Hanger	Capacity (lbs)	Nailing Header	Nailing Joist
110	VPA25	1,050	10d	10d x 1½"
210	VPA2.1	1,230	10d	10d x 1½"
230	VPA35	1,230	10d	10d x 1½"
360	VPA35	1,230	10d	10d x 1½"
560	VPA4	1,230	10d	10d x 1½"

Hanger information on these two pages was provided by either Simpson Strong-Tie™ or USP Structural Connectors™. For additional information, please refer to their literature.

Joist	Variable Slope Seat Joist Hanger[1][3]				
	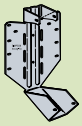				
TJI®	Hanger	Capacity (lbs) Sloped Only	Capacity (lbs) Sloped and Skewed	Nailing Header	Nailing Joist
110	***LSSUI25***	1,110	995	10d	10d x 1½"
210	***LSSU2.1***	1,110	995	10d	10d x 1½"
230	***LSSUI35***	1,110	995	10d	10d x 1½"
360	***LSSUI35***	1,110	995	10d	10d x 1½"
560	***LSSU410***	1,725	1,625	16d	10d x 1½"

General Notes

Bold italic hangers require web stiffeners.

Capacities will vary with different nailing criteria or other support conditions; contact your iLevel representative for assistance.

- Hanger capacities shown are either joist bearing capacity or hanger capacity—whichever is less. Joist end reaction must be checked to ensure it does not exceed the capacity shown in the tables.
- All capacities are for downward loads at 100% duration of load.
- Fill all round, dimple, and positive angle nail holes.
- Use sloped seat hangers and beveled web stiffeners when TJI® joist slope exceeds ¼" per foot.
- Leave 1/16" clearance (⅛" maximum) between the end of the supported joist and the header or hanger.

See additional notes on page 23

Joist		Single Joist—Top Flange				Single Joist—Face Mount(1)				Face Mount Skewed 45° Joist Hanger(1)(4)			
		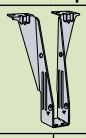				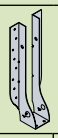				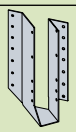			
Depth	TJI®	Hanger	Capacity (lbs)	Nailing Header	Nailing Joist	Hanger	Capacity (lbs)	Nailing Header	Nailing Joist	Hanger	Capacity (lbs)	Nailing Header	Nailing Joist
9½"	110	THO17950	935	10d	10d x 1½"	THF17925	895	10d	10d x 1½"	***SKH1720L/R***	910	10d	10d x 1½"
	210	THO20950	1,030	10d	10d x 1½"	THF20925	895	10d	10d x 1½"	***SKH2020L/R***	1,005	10d	10d x 1½"
	230	THO23950	1,140	10d	10d x 1½"	THF23925	1,160	10d	10d x 1½"	***SKH2320L/R***	1,055	10d	10d x 1½"
11⅞"	110	THO17118	950	10d	10d x 1½"	THF17112	895	10d	10d x 1½"	***SKH1720L/R***	920	10d	10d x 1½"
	210	THO20118	1,030	10d	10d x 1½"	THF20112	895	10d	10d x 1½"	***SKH2020L/R***	1,015	10d	10d x 1½"
	230	THO23118	1,185	10d	10d x 1½"	THF23118	1,215	10d	10d x 1½"	***SKH2320L/R***	1,065	10d	10d x 1½"
	360	THO23118	1,230	10d	10d x 1½"	THF23118	1,260	10d	10d x 1½"	***SKH2320L/R***	1,110	10d	10d x 1½"
	560	THO35118	1,430	10d	10d x 1½"	***THF17112-2***	1,460	10d	10d	***SKH410L/R1***	1,460	16d	16d
14"	110	THO17140	1,215	10d	10d x 1½"	THF17140	950	10d	10d x 1½"	***SKH1720L/R***	920	10d	10d x 1½"
	210	THO20140	1,080	10d	10d x 1½"	THF20140	1,045	10d	10d x 1½"	***SKH2020L/R***	1,015	10d	10d x 1½"
	230	THO23140	1,185	10d	10d x 1½"	THF23140	1,215	10d	10d x 1½"	***SKH2324L/R***	1,065	10d	10d x 1½"
	360	THO23140	1,230	10d	10d x 1½"	THF23140	1,260	10d	10d x 1½"	***SKH2324L/R***	1,110	10d	10d x 1½"
	560	THO35140	1,430	10d	10d x 1½"	***THF17140-2***	1,460	10d	10d	***SKH414L/R1***	1,460	16d	16d
16"	210	THO20160	1,080	10d	10d x 1½"	THF20157	1,045	10d	10d x 1½"	***SKH2024L/R***	1,015	10d	10d x 1½"
	230	THO23160	1,185	10d	10d x 1½"	THF23160	1,215	10d	10d x 1½"	***SKH2324L/R***	1,065	10d	10d x 1½"
	360	THO23160	1,230	10d	10d x 1½"	THF23160	1,260	10d	10d x 1½"	***SKH2324L/R***	1,110	10d	10d x 1½"
	560	THO35160	1,430	10d	10d x 1½"	***THF17157-2***	1,460	10d	10d	***SKH414L/R1***	1,460	16d	16d

Joist		Double Joist—Top Flange				Double Joist—Face Mount(1)			
		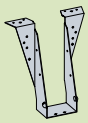				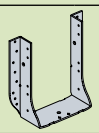			
Depth	TJI®	Hanger	Capacity (lbs)	Nailing Header	Nailing Joist	Hanger	Capacity (lbs)	Nailing Header	Nailing Joist
9½"	110	THO35950	2,010	10d	10d x 1½"	***THF17925-2***	1,350	10d	10d
	210	***THO20950-2***	2,330	16d	10d	***THF20925-2***	1,350	10d	10d
	230	***THO23950-2***	2,490	16d	10d	***THF23925-2***	1,575	10d	10d
11⅞"	110	THO35118	2,050	10d	10d x 1½"	***THF17112-2***	1,575	10d	10d
	210	***THO20118-2***	2,610	16d	10d	***THF20112-2***	1,575	10d	10d
	230	***THO23118-2***	2,675	16d	10d	***THF23118-2***	1,800	10d	10d
	360	***THO23118-2***	2,765	16d	10d	***THF23118-2***	1,800	10d	10d
	560	***BPH71118***	3,185	16d	10d	***HD7120***	2,175	16d	10d
14"	110	THO35140	2,100	10d	10d x 1½"	***THF17140-2***	2,170	10d	10d
	210	***THO20140-2***	2,330	16d	10d	***THF20140-2***	2,250	10d	10d
	230	***THO23140-2***	2,675	16d	10d	***THF23140-2***	2,370	10d	10d
	360	***THO23140-2***	2,765	16d	10d	***THF23140-2***	2,370	10d	10d
	560	***BPH7114***	3,185	16d	10d	***HD7140***	2,720	16d	10d
16"	210	***THO20160-2***	2,330	16d	10d	–	–	–	–
	230	***THO23160-2***	2,675	16d	10d	***THF23160-2***	2,430	10d	10d
	360	***THO23160-2***	2,765	16d	10d	***THF23160-2***	2,520	10d	10d
	560	***BPH7116***	3,185	16d	10d	***HD7160***	2,925	16d	10d

Joist	Variable Slope Seat Connector(5)			
	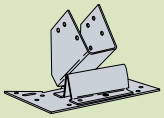			
TJI®	Hanger	Capacity (lbs)	Nailing Header	Nailing Joist
110	TMP175	1,150	10d	10d x 1½"
	TMPH175	1,945	10d	10d x 1½"
210	–	–	–	–
230	TMP23	1,785	10d	10d x 1½"
	TMPH23	1,945	10d	10d x 1½"
360	TMP23	1,785	10d	10d x 1½"
	TMPH23	1,945	10d	10d x 1½"
560	TMP4	1,970	10d	10d x 1½"
	TMPH4	1,945	10d	10d x 1½"

Joist	Variable Slope Seat Joist Hanger(1)(3)				
	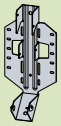				
TJI®	Hanger	Capacity (lbs) Sloped Only	Capacity (lbs) Sloped and Skewed	Nailing Header	Nailing Joist
110	***LSSH179***	1,120	1,120	10d	10d x 1½"
210	***LSSH20***	1,120	1,120	10d	10d x 1½"
230	***LSSH23***	1,120	1,120	10d	10d x 1½"
360	***LSSH23***	1,120	1,120	10d	10d x 1½"
560	***LSSH35***	1,595	1,595	16d	10d x 1½"

Support Requirements

- Support material assumed to be iLevel™ engineered lumber or sawn lumber (Douglas fir or southern pine species).
- Minimum support width for single- and double-joist top mount hangers is 3" (1½" for ITT hangers).
- Minimum support width for face mount hangers with 10d and 16d nails is 1¾" and 2", respectively.

Footnotes:

(1) Face mount hanger capacities may be increased up to 15% for snow roofs or 25% for non-snow roofs. Maximum increase for LSSU, LSSUI, and LSSH hangers is 15%.

(2) VPA connectors are allowed on slopes of 3/12 through 12/12 only.

(3) LSSU, LSSUI and LSSH hangers can be field adjusted for slopes and skews of up to 45 degrees. Additional lateral restraints are required for 16" deep TJI® joists.

(4) Miter cut is required at end of joist.

(5) TMP connectors are allowed on slopes of 1/12 through 6/12 only, and TMPH connectors are allowed on slopes of 6/12 through 12/12 only.

See General Notes on page 22

iLevel™ by Weyerhaeuser

WE CAN HELP YOU BUILD SMARTER.

At iLevel, our goal is to help you build solid and durable homes by providing high-quality residential building products and unparalleled technical and field support.

Floors and Roofs: Start with the best framing components in the industry: our iLevel™ Trus Joist® Silent Floor® joists; TimberStrand® LSL rim board; and TimberStrand® LSL, Microllam® LVL, and Parallam® PSL headers and beams. Pull them all together with our durable iLevel™ Structurwood® roof sheathing and self-gapping Structurwood Edge® or Structurwood Edge Gold® floor panels. For homeowners who are building their custom dream home, you can upgrade to our premium FrameWorks® Floor System.

Walls: Get the best value out of your framing package—use TimberStrand® LSL studs for tall walls, kitchens, and bathrooms, and our traditional, solid-sawn lumber everywhere else. Cut down installation time by using TimberStrand® LSL and TJ®-Insulated headers for doors and windows, and our Structurwood® wall sheathing with its handy two-way nail lines.

Software Solutions: If you are a design professional or lumber dealer, iLevel offers a full array of software packages to help you specify individual framing members, create cut lists, manage inventories—even help you design whole-house framing solutions. Contact your iLevel representative to find out how to get the software you need.

Technical Support: Need technical help? iLevel has one of the largest networks of engineers and sales representatives in the business. Call us for help, and a skilled member from our team of experts will contact you within one business day to evaluate and help solve your structural frame problems—GUARANTEED.

CONTACT US

1.888.iLevel8 (1.888.453.8358)

www.iLevel.com
iLevel@weyerhaeuser.com

2910 East Amity Road (83716)
P.O. Box 8449
Boise, ID 83707-2449
208.364.3600

OUR GUARANTEE

October 2006
Reorder TJ-4000

This document supersedes all previous versions. If this is more than one year old, contact your dealer or iLevel rep.
NW

GP Lam® LVL

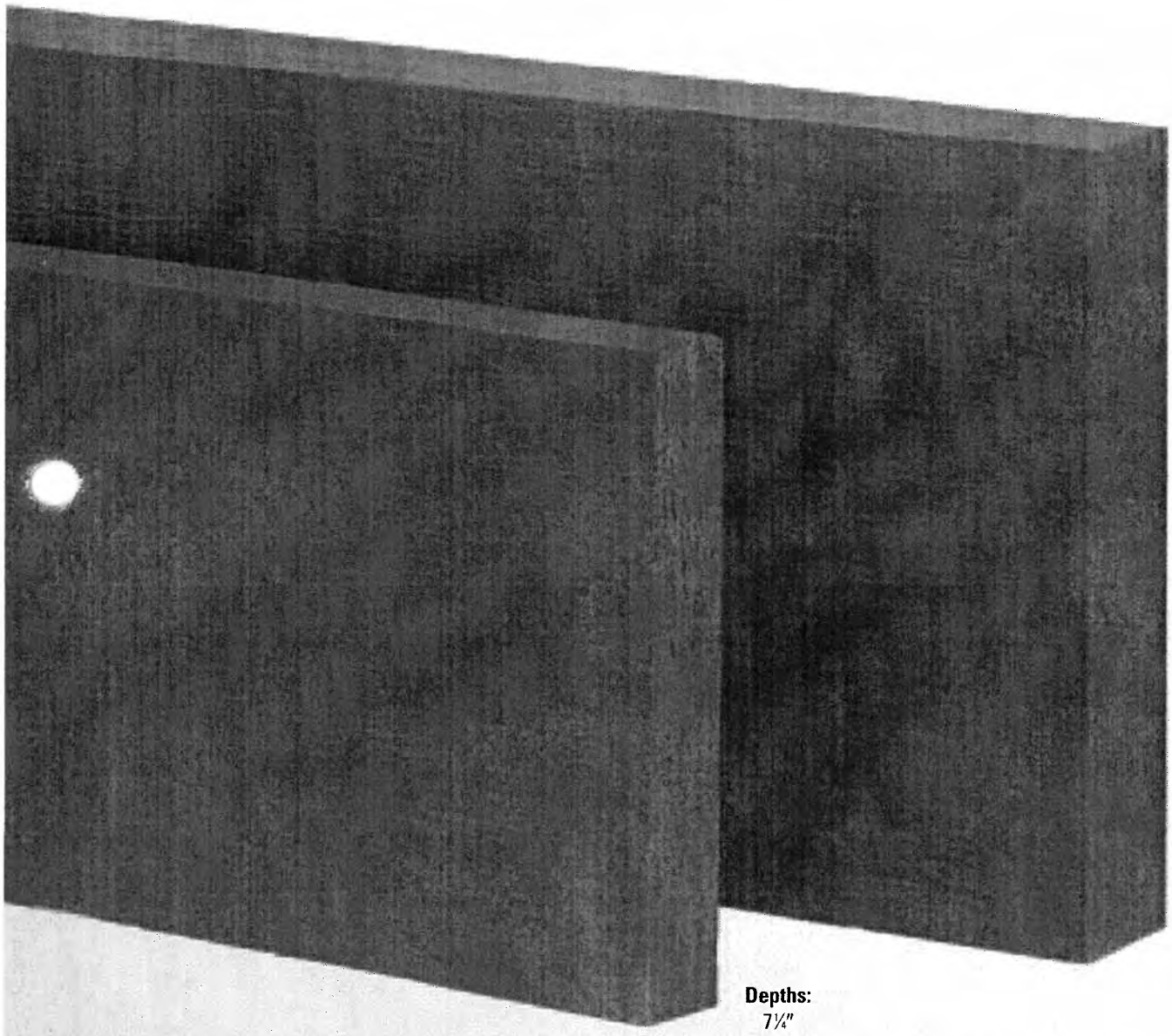

Depths:

7¼″
9¼″ 9½″
11¼″ 11⅞″
14″ 16″ 18″ 23⅞″
20″ 22″ (special order)

Thickness:

1¾″

Lengths:

Available in lengths up to 60 feet.

GP LAM®
with FiberGuard™

LIFETIME LIMITED WARRANTY

Structural Support for Today's Homes

Today, home designs often include grand entrances, wider doorways between rooms, and dramatic window configurations. GP Lam® LVL is designed for use as floor beams; door, window and garage door headers; and ridge and hip beams.

Multiple pieces of GP Lam LVL can be assembled easily to obtain greater thicknesses, providing additional strength to carry heavier loads. Greater load capacity means longer, uninterrupted spans.

For better performance, GP Lam LVL features FiberGuard™ sealant to help protect against splits, cupping and warping due to moisture damage while in storage and transit to the jobsite. The LVL is evenly coated on all four sides and both ends with a modified emulsion film, helping to reduce the moisture absorption rate and to reduce the damage that an unprotected product may sustain. FiberGuard sealant also includes UV inhibitors to minimize color change caused by the sun's ultraviolet rays.

GP Lam® LVL Features & Benefits

- Thickness of 1¾″
- Standard depths of 7¼″, 9¼″, 9½″, 11¼″, 11⅞″, 14″, 16″, 18″ & 23⅞″ (20″ & 22″ by special order)
- Value Lengths of 24′, 28′, 32′, 36′, 40′, 44′ and 48′ (lengths to 60′ by special order)
- High design values for bending, stiffness and shear strength
- High strength-to-weight ratio, more than 50% stronger than solid sawn products
- Consistent manufacturing minimizes defects and reduces waste on the job
- Installs as easily as ordinary lumber
- FiberGuard sealant offers jobsite protection from moisture
- Backed by a Lifetime Limited Warranty*

*See manufacturer's warranty for terms, conditions and limitations. To receive a copy of the manufacturer's warranty call 1-888-502-BLUE.

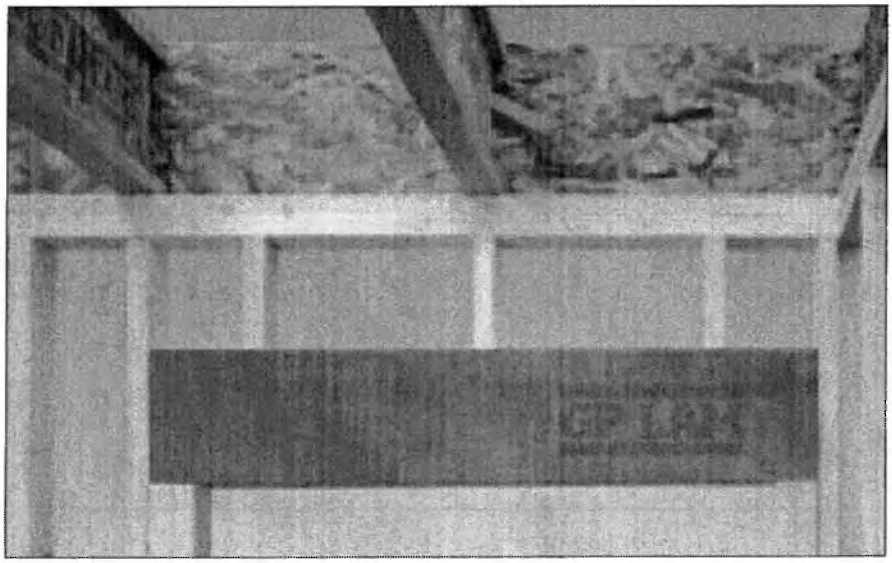

GP Lam® LVL Bearing Details

Beam-to-Beam Connection

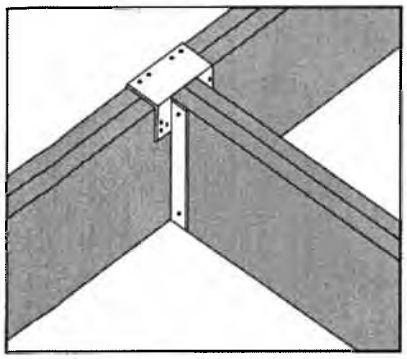

Make sure hanger capacity is appropriate for each application. Hangers must be properly installed to achieve full capacity.

Bearing on Wood Column

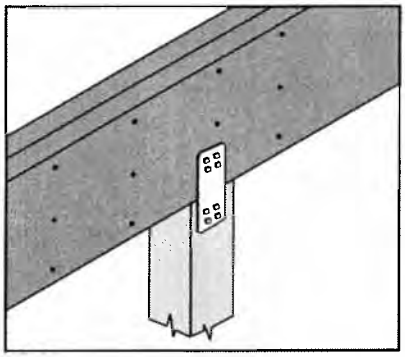

Bearing on Steel Column

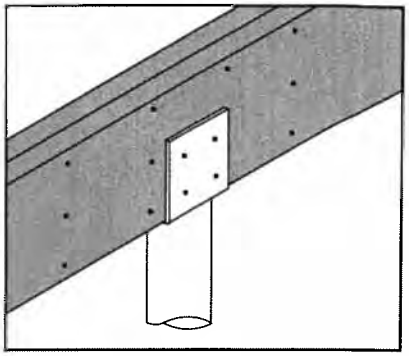

Verify the required bearing area and the ability of the supporting column member to provide adequate strength. Side plates may be required. Consult designer of record. See chart on page 53 for column cap suggestions.

Beam Pocket in Masonry Wall

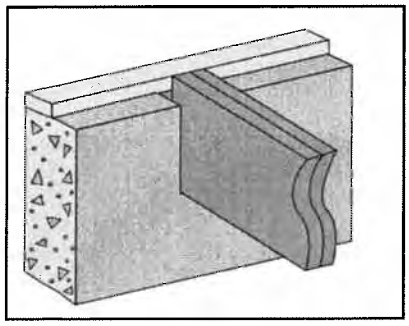

Prevent direct contact of GP Lam LVL with concrete. Consult local building code for requirements.

Bearing on Exterior Wall

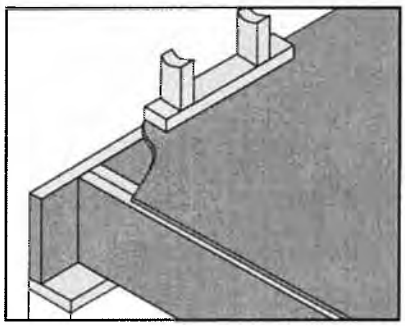

Prevent direct contact of GP Lam LVL with concrete. Consult local building code for requirements.

Bearing for Door or Window Header

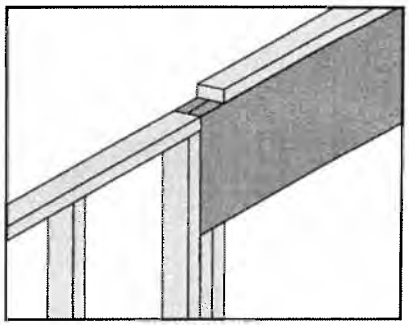

See "Bearing Length Requirements" on page 40.

Low End Hip Bearing

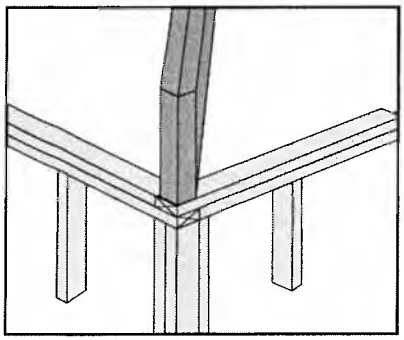

Hip beam must bear completely on plate or post. Seat cut must not extend past inside face of bearing.

High End Hip Bearing

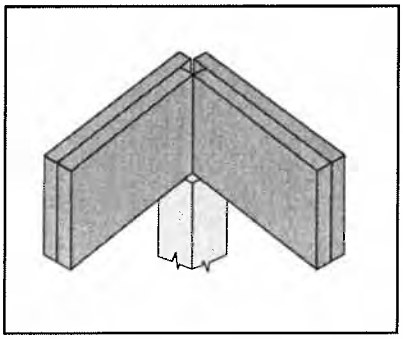

Hip beam must bear on post or in properly designed hanger or other connection.

Seat Cut / Notching

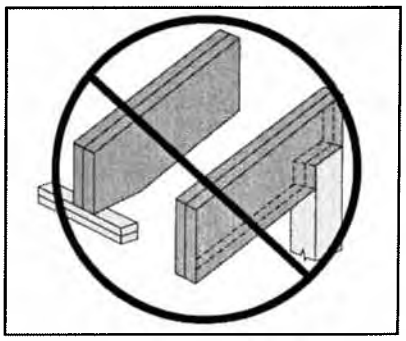

Seat cut must not extend past inside face of bearing. Do not notch beams at bearing.

For fastening recommendations for multiple-piece GP Lam LVL members, see pages 48 & 49.

GP Lam® LVL Handling & Installation

- GP Lam LVL shall not be stored in direct contact with the ground and should be protected from weather. Provide air circulation under covering and around stacks of materials.
- Bundles should be stored level and should not be opened until time of installation.
- Stack and handle GP Lam LVL flatwise.
- Handlers and installers should use appropriate personal protective equipment such as gloves and goggles.
- Engineered lumber must not be installed in direct contact with concrete or masonry construction and shall be used in covered dry use conditions only.
- Minimum bearing length for GP Lam LVL beams and headers: end bearing 1½", intermediate bearing 3".
- Ends of GP Lam LVL beams and headers must be restrained against rotation and the top (or compression edge) must be laterally supported by perpendicular framing or bracing at 24" on-center or closer.
- 1¾" x 16" and deeper GP Lam LVL beams must only be used in multiple-piece members.
- Nails installed in the narrow face of GP Lam LVL shall not be spaced closer than 4" (10d common nails) or 3" (8d common nails).
- Multiple piece GP Lam LVL may not be stagger-spliced as is commonly done with dimension lumber. If the required length of a multiple-span beam exceeds the available length of the LVL, the LVL beams must be installed so as to butt together over a common bearing.
- Strength and stiffness properties of GP Lam LVL exceed those of typical dimension lumber. It may be possible to substitute GP Lam LVL for dimension lumber roof members in code-prescribed conventional light-frame construction, but design of conventional construction is beyond the scope of this product guide and of BlueLinx Engineered Lumber Technical Services.
- When nail type is not specified in this guide, use common, box or sinker.
- To help safeguard the structural integrity of connections with preservative treated wood, use only hot-dipped galvanized or stainless steel fasteners, connectors and hardware.

As a minimum requirement, hot-dipped galvanized coated fasteners should conform to ASTM Standard A153 and hot-dipped galvanized coated connectors should conform to ASTM Standard A653 (Class G-185). In demanding applications, or in highly corrosive environments, stainless steel fasteners and connectors should be utilized and may, in fact, be required by building codes.

Most commonly available electroplated galvanized fasteners do not have a sufficient coating of zinc and are not recommended. Aluminum should not be used in direct contact with preservative treated wood. Never mix galvanized steel with stainless steel in the same connection.

GP Lam LVL Floor Beams

The table below shows the size of the beams needed to support various floor systems. The table is valid for loads of one floor only, i.e., a second story floor or one story floor over a basement. (See drawing at right.)

When floor joists span continuously from wall to wall (not cut at beam) this table requires that "B" be not less than 45%, or greater than 55% of "A".

Example: If "A" = 32', "B" must be between 14.4' (32 × .45) and 17.6' (32 × .55)

For non-conforming situations, use FASTBeam® analysis and selection software or contact BlueLinx.

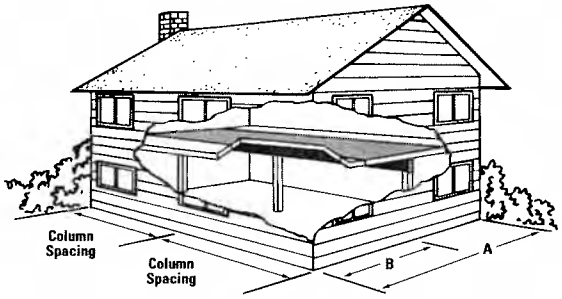

		Column Spacing (center-to-center)									
		11'	12'	13'	14'	15'	16'	17'	18'	19'	20'
Total Floor Joist Span "A"	24'	2-11¼" 3-9¼"	2-11¼" 3-9½"	2-11⅞" 3-11¼"	2-14" 3-11¼"	2-14" 3-11⅞"	2-16"+ 3-14"	2-16"+ 3-14"	2-18"+ 3-16"	2-18"+ 3-16"	2-18"+ 3-16"
	28'	2-11¼" 3-9¼"	2-11⅞" 3-11¼"	2-14"+ 3-11¼"	2-14"+ 3-11⅞"	2-16"+ 3-14"	2-16"+ 3-14"	2-16"+ 3-14"	2-18"+ 3-16"	2-18"+ 3-16"	3-16"
	32'	2-11¼"	2-14"+ 3-11¼"	2-14"+ 3-11⅞"	2-14"+	2-16"+ 3-14"	2-16"+ 3-14"	2-18"+ 3-16"	2-18"+ 3-16"	3-16"+	3-18"+
	36'	2-11⅞"+ 3-11¼"	2-14"+ 3-11¼"	2-14"+ 3-11⅞"	2-16"+ 3-14"	2-16"+ 3-14"	2-18"+ 3-14"	3-16"+	3-16"+	3-18"+	3-18"+
	40'	2-11⅞"+ 3-11 ¼"	2-14"+ 3-11¼"	2-14"+	2-16"+ 3-14"	2-16"+ 3-14"	3-16"+	3-16"+	3-16"+	3-18"+	3-18"+

NOTES:

1. Table is based on continuous floor joist span and simple or continuous beam span conditions. If floor joists are not continuous above the beam, take the sum of the joist spans then multiply by 0.8. This is the total floor joist span to consider.
2. Required end bearing length (based on 565 psi) is 3.0" unless the subscript + is shown. In that case, 4.5" is required.
3. At intermediate supports of continuous spans, use the following guidelines or refer to page 40.
   - 7½" bearing length for beams requiring 3" bearing at the beam ends
   - 10½" bearing length for beams requiring 4½" bearing at the beam ends
4. Beams require full width bearing. Minimum cripple size for 5 ¼" thick beams is 2x6.
5. Table is based on residential floor loading of 40 psf live load and 12 psf dead load.
6. Live load reductions have been applied per IBC section 1607.9.1.
7. Deflection is limited to L/360 at live load and L/240 at total load.
8. For other loading conditions refer to page 42.

GP Lam® LVL Window and Patio Door Headers – 2-Story

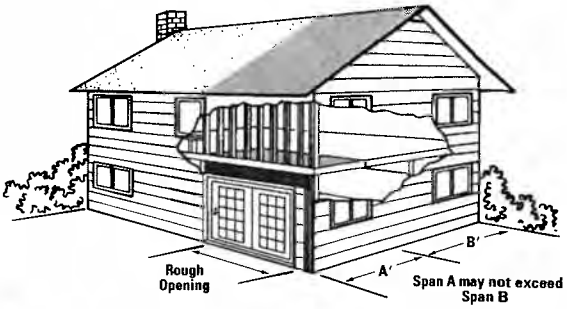

Two-Story Applications

This table considers the combined loads from a wall, second story floor (¼ of total floor joist span) and various roof truss spans with a 2′ soffit. An intermediate floor beam is assumed. If the soffit exceeds 2′, additional engineering will be necessary.

Roof Loading		Snow (115%)										Non-Snow (125%)									
		25 psf LL + 20 psf DL					40 psf LL + 20 psf DL					20 psf LL + 15 psf DL					20 psf LL + 25 psf DL				
Rough Opening		6′	8′	9′	10′	12′	6′	8′	9′	10′	12′	6′	8′	9′	10′	12′	6′	8′	9′	10′	12′
Roof Truss Span with 2′ Soffit Assumed	20′	1-9¼″ 2-7¼″	1-11¼″+ 2-9¼″ 3-7¼″	1-14″+ 2-11¼″ 3-9¼″	2-11¼″	2-16″ 3-14″	1-9¼″+ 2-7¼″	1-11¼″+ 2-9¼″	2-11¼″ 3-9¼″	2-14″ 3-11¼″	2-16″+ 3-14″	1-7¼″ 2-7¼″	1-11¼″ 2-9¼″ 3-7¼″	1-14″+ 2-9¼″	1-14″+ 2-11¼″ 3-9¼″	2-14″ 3-11¼″	1-9¼″ 2-7¼″	1-11¼″+ 2-9¼″ 3-7¼″	1-14″+ 2-11¼″ 3-9¼″	2-11¼″	2-16″ 3-14″
	24′	1-9¼″ 2-7¼″	1-11¼″+ 2-9¼″	1-14″+ 2-11¼″ 3-9¼″	2-11¼″ 3-11¼″	2-16″ 3-14″	1-9¼″+ 2-7¼″	2-9¼″ 3-9¼″	2-11¼″ 3-9¼″	2-14″ 3-11¼″	2-18″+ 3-14″	1-9¼″ 2-7¼″	1-11¼″+ 2-9¼″ 3-7¼″	1-14″+ 2-11¼″ 3-9¼″	2-11¼″	2-16″ 3-14″	1-9¼″ 2-7¼″	1-11¼″+ 2-9¼″	1-14″+ 2-11¼″ 3-9¼″	2-11¼″ 3-11¼″	2-16″ 3-14″
	28′	1-9¼″+ 2-7¼″	2-9¼″	2-11¼″ 3-9¼″	2-14″ 3-11¼″	2-16″+ 3-14″	1-9¼″+ 2-7¼″	2-11¼″ 3-9¼″	2-11¼″+ 3-11¼″	2-14″+ 3-11¼″	2-18″+ 3-16″	1-9¼″ 2-7¼″	1-11¼″+ 2-9¼″	1-14″+ 2-11¼″ 3-9¼″	2-11¼″ 3-11¼″	2-16″ 3-14″	1-9¼″+ 2-7¼″	2-9¼″	2-11¼″ 3-9¼″	2-14″ 3-11¼″	2-16″+ 3-14″
	32′	1-9¼″+ 2-7¼″	2-11¼″ 3-9¼″	2-11¼″	2-14″+ 3-11¼″	2-18″+ 3-16″	2-7¼″	2-11¼″+ 3-9¼″	2-14″+ 3-11¼″	2-16″+ 3-11¼″	3-16″+	1-9¼″+ 2-7¼″	1-14″+ 2-9¼″	2-11¼″ 3-9¼″	2-14″ 3-11¼″	2-16″+ 3-14″	1-9¼″+ 2-7¼″	2-11¼″ 3-9¼″	2-11¼″	2-14″+ 3-11¼″	2-18″+ 3-16″
	36′	1-9¼″+ 2-7¼″	2-11¼″ 3-9¼″	2-11¼″+ 3-11¼″	2-14″+ 3-11¼″	2-18″+ 3-16″	2-9¼″ 3-7¼″	2-11¼″+ 3-9¼″	2-14″+ 3-11¼″	2-16″+ 3-14″	3-16″+	1-9¼″+ 2-7¼″	2-9¼″ 3-9¼″	2-11¼″	2-14″+ 3-11¼″	2-18″+ 3-14″	1-9¼″+ 2-7¼″	2-11¼″ 3-9¼″	2-11¼″+ 3-11¼″	2-14″+ 3-11¼″	2-18″+ 3-16″

+ See note 1.

NOTES:

1. Required end bearing length (based on 625 psi) is 3.0″ unless the subscript + is shown. In that case, 4.5″ is required.
2. Headers require full width bearing. Minimum cripple size for 5¼″ thick beams is 2x6.
3. Table is based on residential floor loading of 40 psf live load and 12 psf dead load and exterior wall weight of 100 plf.
4. A beam line down the center of the second floor is assumed.
5. Deflection is limited to L/360 and the lesser of L/240 or 5/16″ at total load.
6. Roof live and dead loads shown are applied vertically to the horizontal projection.

GP Lam LVL Garage Door Headers – 2-Story

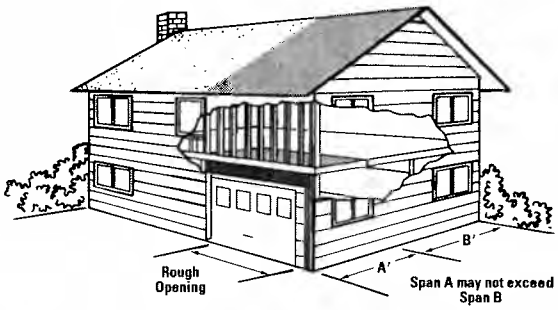

Two-Story Applications

This table considers the combined loads from a wall, second story floor (¼ of total floor joist span) and various roof truss spans with a 2′ soffit. An intermediate floor beam is assumed. If the soffit exceeds 2′, additional engineering will be necessary.

Roof Loading		Snow (115%)									Non-Snow (125%)								
		25 psf LL + 20 psf DL			30 psf LL + 20 psf DL			40 psf LL + 20 psf DL			20 psf LL + 15 psf DL			20 psf LL + 20 psf DL			20 psf LL + 25 psf DL		
Rough Opening		9′3″	16′3″	18′3″	9′3″	16′3″	18′3″	9′3″	16′3″	18′3″	9′3″	16′3″	18′3″	9′3″	16′3″	18′3″	9′3″	16′3″	18′3″
Roof Truss Span with 2′ Soffit Assumed	20′	1-11¼″+ 2-9¼″	2-18″+ 3-14″	2-18″+ 3-16″	1-11¼″+ 2-9¼″	2-16″+ 3-14″	2-18″+ 3-16″	2-9¼″ 3-9¼″	2-18″+ 3-14″	3-16″+	1-11¼″+ 2-9¼″ 3-7¼″	2-16″ 3-14″	2-18″+ 3-16″	1-11¼″+ 2-9¼″	2-16″+ 3-14″	2-18″+ 3-16″	1-11¼″+ 2-9¼″	2-16″+ 3-14″	2-18″+ 3-16″
	24′	2-9¼″	2-18″+ 3-14″	3-16″	2-9¼″ 3-9¼″	2-18″+ 3-16″	3-16″+	2-11¼″ 3-9¼″	3-16″+	3-18″+	1-11¼″+ 2-9¼″	2-16″+ 3-14″	2-18″+ 3-16″	1-11¼″+ 2-9¼″	2-16″+ 3-14″	2-18″+ 3-16″	2-9¼″	2-18″+ 3-14″	3-16″
	28′	2-11¼″ 3-9¼″	3-16″+	3-18″+	2-11¼″ 3-9¼″	3-16″+	3-18″+	2-11¼″+ 3-9¼″	3-16″+	3-18″+	2-9¼″	2-18″+ 3-14″	2-18″+ 3-16″	2-9¼″ 3-9¼″	2-18″+ 3-16″	3-16″+	2-11¼″ 3-9¼″	3-16″+	3-18″+
	32′	2-11¼″ 3-9¼″	3-16″+	3-18″+	2-11¼″+ 3-9¼″	3-16″+	3-18″+	2-11¼″+ 3-9¼″	3-18″+		2-9¼″ 3-9¼″	2-18″+ 3-16″	3-18″+	2-11¼″ 3-9¼″	3-16″+	3-18″+	2-11¼″ 3-9¼″	3-16″+	3-18″+
	36′	2-11¼″+ 3-9¼″	3-16″+	3-18″+	2-11¼″+ 3-9¼″	3-18″+		2-11¼″+			2-11¼″ 3-9¼″	3-16″+	3-18″+	2-11¼″ 3-9¼″	3-16″+	3-18″+	2-11¼″+ 3-9¼″	3-16″+	3-18″+

+ See note 1.

NOTES:

1. Required end bearing length (based on 625 psi) is 3.0″ unless the subscript + is shown. In that case, 4.5″ is required.
2. Headers require full width bearing. Minimum cripple size for 5¼″ thick beams is 2x6.
3. Table is based on residential floor loading of 40 psf live load and 12 psf dead load and exterior wall weight of 100 plf.
4. A beam line down the center of the second floor is assumed.
5. Deflection is limited to L/360 at live load and L/240 at total load.
6. Roof live and dead loads shown are applied vertically to the horizontal projection.

GP Lam® LVL Window and Patio Door Headers – Roof Only

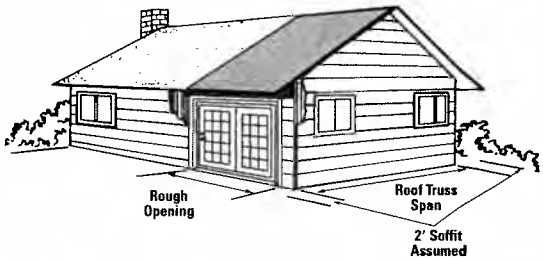

Roof Applications

This table indicates the appropriate size header for various roof truss spans with 2' soffit. If the soffit is greater than 2', additional engineering is necessary.

Roof Loading		Snow (115%)										Non-Snow (125%)									
		25 psf LL + 20 psf DL					40 psf LL + 20 psf DL					20 psf LL + 15 psf DL					20 psf LL + 25 psf DL				
Rough Opening		6'	8'	9'	10'	12'	6'	8'	9'	10'	12'	6'	8'	9'	10'	12'	6'	8'	9'	10'	12'
Roof Truss Span with 2' Soffit Assumed	20'	1-7 1/4"	1-9 1/4" 2-7 1/4"	1-11 1/4" 2-9 1/4" 3-7 1/4"	1-14" 2-9 1/4" 3-9 1/4"	2-14" 3-11 1/4"	1-7 1/4"	1-11 1/4" 2-9 1/4" 3-7 1/4"	1-11 1/4"+ 2-9 1/4"	1-14"+ 2-11 1/4" 3-9 1/4"	2-14" 3-11 1/4"	1-7 1/4"	1-9 1/4" 2-7 1/4"	1-9 1/4" 2-9 1/4" 3-7 1/4"	1-11 1/4" 2-9 1/4"	1-14" 2-11 1/4" 3-9 1/4"		1-9 1/4" 2-7 1/4"	1-11 1/4" 2-9 1/4" 3-7 1/4"	1-14" 2-9 1/4" 3-9 1/4"	2-14" 3-11 1/4"
	24'	1-7 1/4"	1-9 1/4" 2-9 1/4" 3-7 1/4"	1-11 1/4" 2-9 1/4"	1-14" 2-11 1/4" 3-9 1/4"	2-14" 3-11 1/4"	1-7 1/4"	1-11 1/4"+ 2-9 1/4" 3-7 1/4"	1-14"+ 2-9 1/4" 3-9 1/4"	2-11 1/4" 3-9 1/4"	2-14"	1-7 1/4"	1-9 1/4" 2-7 1/4"	1-11 1/4" 2-9 1/4" 3-7 1/4"	1-11 1/4" 2-9 1/4"	2-11 1/4" 3-11 1/4"	1-7 1/4"	1-9 1/4" 2-9 1/4" 3-7 1/4"	1-11 1/4" 2-9 1/4"	1-14" 2-11 1/4" 3-9 1/4"	2-14" 3-11 1/4"
	28'	1-7 1/4"	1-11 1/4" 2-9 1/4" 3-7 1/4"	1-11 1/4"+ 2-9 1/4"	1-14"+ 2-11 1/4" 3-9 1/4"	2-14" 3-11 1/4"	1-9 1/4" 2-7 1/4"	1-11 1/4"+ 2-9 1/4"	1-14"+ 2-11 1/4" 3-9 1/4"	2-11 1/4" 3-11 1/4"	2-16" 3-14"	1-7 1/4"	1-9 1/4" 2-7 1/4"	1-11 1/4" 2-9 1/4" 3-7 1/4"	1-14" 2-9 1/4" 3-9 1/4"	2-14" 3-11 1/4"	1-7 1/4"	1-11 1/4" 2-9 1/4" 3-7 1/4"	1-11 1/4"+ 2-9 1/4"	1-14"+ 2-11 1/4" 3-9 1/4"	2-14" 3-11 1/4"
	32'	1-7 1/4"	1-11 1/4"+ 2-9 1/4" 3-7 1/4"	1-14"+ 2-9 1/4" 3-9 1/4"	2-11 1/4" 3-9 1/4"	2-14"	1-9 1/4"+ 2-7 1/4"	1-11 1/4"+ 2-9 1/4"	2-11 1/4" 3-9 1/4"	2-14 3-11 1/4"	2-16"+ 3-14"	1-7 1/4"	1-9 1/4" 2-9 1/4" 3-7 1/4"	1-11 1/4" 2-9 1/4"	1-14" 2-11 1/4" 3-9 1/4"	2-14" 3-11 1/4"	1-7 1/4"	1-11 1/4"+ 2-9 1/4" 3-7 1/4"	1-14"+ 2-9 1/4" 3-9 1/4"	2-11 1/4" 3-9 1/4"	2-14"
	36'	1-9 1/4" 2-7 1/4"	1-11 1/4"+ 2-9 1/4" 3-7 1/4"	1-14"+ 2-11 1/4" 3-9 1/4"	2-11 1/4"	2-16" 3-14"	1-9 1/4"+ 2-7 1/4"	2-9 1/4"	2-11 1/4" 3-9 1/4"	2-14" 3-11 1/4"	2-16"+ 3-14"	1-7 1/4"	1-11 1/4" 2-9 1/4" 3-7 1/4"	1-11 1/4" 2-9 1/4"	1-14"+ 2-11 1/4" 3-9 1/4"	2-14" 3-11 1/4"	1-9 1/4" 2-7 1/4"	1-11 1/4"+ 2-9 1/4" 3-7 1/4"	1-14"+ 2-11 1/4" 3-9 1/4"	2-11 1/4"	2-16" 3-14"

+ See note 1.

NOTES:

1. Required bearing length (based on 625 psi) is 3.0" unless the subscript + is shown. In that case, 4.5" is required.
2. Headers require full width bearing. Minimum cripple size for 5 1/4" thick beams is 2x6.
3. Deflection is limited to L/240 at live load and the lesser of L/180 or 5/16" at total load.
4. Roof live and dead loads shown are applied vertically to the horizontal projection.

GP Lam LVL Garage Door Headers – Roof Only

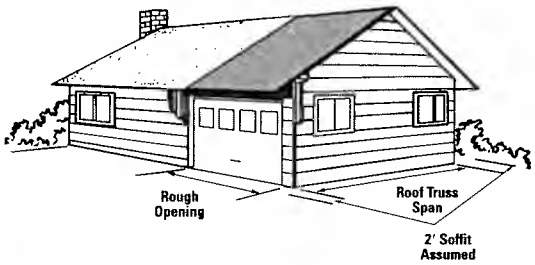

Roof Applications

This table indicates the appropriate size header for various roof truss spans with 2' soffit. If the soffit is greater than 2', additional engineering is necessary.

Roof Loading		Snow (115%)									Non-Snow (125%)								
		25 psf LL + 20 psf DL			30 psf LL + 20 psf DL			40 psf LL + 20 psf DL			20 psf LL + 15 psf DL			20 psf LL + 20 psf DL			20 psf LL + 25 psf DL		
Rough Opening		9'3"	16'3"	18'3"	9'3"	16'3"	18'3"	9'3"	16'3"	18'3"	9'3"	16'3"	18'3"	9'3"	16'3"	18'3"	9'3"	16'3"	18'3"
Roof Truss Span with 2' Soffit Assumed	20'	1-9 1/4" 2-7 1/4"	2-11 1/4" 3-11 1/4"	2-14" 3-11 1/4"	1-9 1/4" 2-7 1/4"	2-14" 3-11 1/4"	2-14" 3-11 1/4"	1-11 1/4"+ 2-9 1/4" 3-7 1/4"	2-14" 3-11 1/4"	2-16"+ 3-14"	1-9 1/4" 2-7 1/4"	1-14"+ 2-11 1/4" 3-9 1/4"	2-11 1/4" 3-11 1/4"	1-9 1/4" 2-7 1/4"	2-11 1/4"	2-14" 3-11 1/4"	1-9 1/4" 2-7 1/4"	2-11 1/4" 3-11 1/4"	2-14" 3-11 1/4"
	24'	1-9 1/4" 2-7 1/4"	2-14" 3-11 1/4"	2-14" 3-11 1/4"	1-11 1/4"+ 2-7 1/4"	2-14" 3-11 1/4"	2-16"+ 3-14"	1-11 1/4"+ 2-9 1/4" 3-7 1/4"	2-14"+ 3-11 1/4"	2-16"+ 3-14"	1-9 1/4" 2-7 1/4"	2-11 1/4"	2-14" 3-11 1/4"	1-9 1/4" 2-7 1/4"	2-11 1/4" 3-11 1/4"	2-14" 3-11 1/4"	1-9 1/4" 2-7 1/4"	2-14" 3-11 1/4"	2-14" 3-11 1/4"
	28'	1-11 1/4"+ 2-9 1/4" 3-7 1/4"	2-14" 3-11 1/4"	2-16"+ 3-14"	1-11 1/4"+ 2-9 1/4" 3-7 1/4"	2-14"+ 3-11 1/4"	2-16"+ 3-14"	1-11 1/4"+ 2-9 1/4" 3-7 1/4"	2-16"+ 3-14"	2-18"+ 3-14"	1-9 1/4" 2-7 1/4"	2-11 1/4" 3-11 1/4"	2-14" 3-11 1/4"	1-9 1/4" 2-7 1/4"	2-14" 3-11 1/4"	2-14" 3-11 1/4"	1-11 1/4"+ 2-9 1/4" 3-7 1/4"	2-14" 3-11 1/4"	2-16"+ 3-14"
	32'	1-11 1/4"+ 2-9 1/4" 3-7 1/4"	2-14"+ 3-11 1/4"	2-16"+ 3-14"	1-11 1/4"+ 2-9 1/4" 3-7 1/4"	2-16"+ 3-14"	2-16"+ 3-14"	2-9 1/4"	2-16"+ 3-14"	3-16"+	1-9 1/4" 2-7 1/4"	2-14" 3-11 1/4"	2-14" 3-11 1/4"	1-11 1/4"+ 2-9 1/4" 3-7 1/4"	2-14" 3-11 1/4"	2-16"+ 3-14"	1-11 1/4"+ 2-9 1/4" 3-7 1/4"	2-14"+ 3-11 1/4"	2-16"+ 3-14"
	36'	1-11 1/4"+ 2-9 1/4" 3-7 1/4"	2-16"+ 3-14"	2-16"+ 3-14"	1-14"+ 2-9 1/4" 3-7 1/4"	2-16"+ 3-14"	2-18"+ 3-14"	2-9 1/4"	3-14"+	3-16"+	1-9 1/4"+ 2-7 1/4"	2-14" 3-11 1/4"	2-16"+ 3-14"	1-11 1/4"+ 2-9 1/4" 3-7 1/4"	2-14"+ 3-11 1/4"	2-16"+ 3-14"	1-11 1/4"+ 2-9 1/4" 3-7 1/4"	2-14"+	2-16"+ 3-14"

+ See note 1.

NOTES:

1. Required end bearing length (based on 625 psi) is 3.0" unless the subscript + is shown. In that case, 4.5" is required.
2. Headers require full width bearing. Minimum cripple size for 5 1/4" thick beams is 2x6.
3. Deflection is limited to L/240 at live load and L/180 at total load.
4. Roof live and dead loads shown are applied vertically to the horizontal projection.

GP Lam® LVL Roof Hip Beam Chart

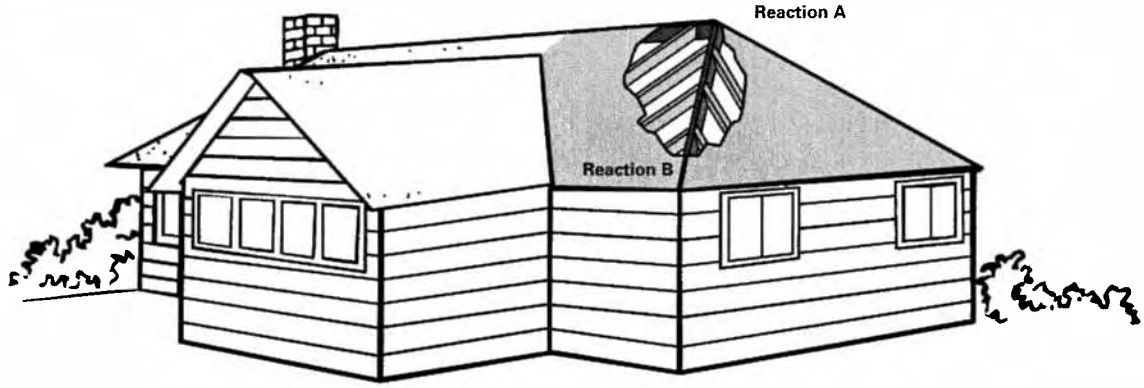

2.0E GP Lam LVL

Longest horizontal rafter span (L)		Roof Loading Snow (115%)								
		20 psf LL + 13 psf DL			30 psf LL + 13 psf DL			40 psf LL + 13 psf DL		
		Roof Slope			Roof Slope			Roof Slope		
		up to 4/12	up to 8/12	up to 12/12	up to 4/12	up to 8/12	up to 12/12	up to 4/12	up to 8/12	up to 12/12
12′	Hip Beam Depth	1 – 11¼″	1 – 11¼″	1 – 11¼″	1 – 11¼″	1 – 11¼″	1 – 11⅞″	1 – 11¼″	1 – 11⅞″	1 – 14″
		2 – 9¼″	2 – 9¼″	2 – 9¼″	2 – 9¼″	2 – 9¼″	2 – 9¼″	2 – 9¼″	2 – 9¼″	2 – 11¼″
		3 – 9¼″	3 – 9¼″	3 – 9¼″	3 – 9¼″	3 – 9¼″	3 – 9¼″	3 – 9¼″	3 – 9¼″	3 – 9¼″
	Order Length (ft)	22	24	26	22	24	26	22	24	26
	React. A (lbs)	1,745	1,805	1,895	2,225	2,285	2,380	2,705	2,770	2,870
	React. B (lbs)	895	925	975	1,135	1,170	1,220	1,375	1,410	1,470
14′	Hip Beam Depth	1 – 14″	1 – 14″	1 – 14″	1 – 14″	1 – 14″	1 – 14″	1 – 14″	2 – 11⅞″	2 – 11⅞″
		2 – 9½″	2 – 11¼″	2 – 11¼″	2 – 11¼″	2 – 11¼″	2 – 11¼″	2 – 11⅞″	3 – 11¼″	3 – 11⅞″
		3 – 9¼″	3 – 9¼″	3 – 9¼″	3 – 9¼″	3 – 9½″	3 – 11¼″	3 – 11¼″	4 – 9¼″	4 – 9¼″
	Order Length (ft)	26	28	30	26	28	30	26	28	30
	React. A (lbs)	2,380	2,460	2,585	3,035	3,115	2,540	3,690	3,820	3,820
	React. B (lbs)	1,225	1,265	1,330	1,550	1,600	1,310	1,875	1,970	1,970
16′	Hip Beam Depth	2 – 11⅞″	2 – 11⅞″	2 – 14″	2 – 14″	2 – 14″	2 – 14″	2 – 14″	2 – 14″	2 – 16″
		3 – 11¼″	3 – 11¼″	3 – 11¼″	3 – 11¼″	3 – 11¼″	3 – 11⅞″	3 – 11⅞″	3 – 11⅞″	3 – 14″
		4 – 9¼″	4 – 9½″	4 – 11¼″	4 – 11¼″	4 – 11¼″	4 – 11¼″	4 – 11¼″	4 – 11¼″	4 – 11⅞″
	Order Length (ft)	28	30	34	28	30	34	28	30	34
	React. A (lbs)	3,150	3,285	3,450	4,025	4,135	4,330	4,880	5,015	5,185
	React. B (lbs)	1,840	1,720	1,815	2,085	2,150	2,270	2,515	2,600	2,695
18′	Hip Beam Depth	2 – 14″	2 – 14″	2 – 16″	2 – 16″	2 – 16″	2 – 16″	2 – 16″	2 – 16″	2 – 18″
		3 – 11⅞″	3 – 14″	3 – 14″	3 – 14″	3 – 14″	3 – 14″	3 – 14″	3 – 14″	3 – 16″
		4 – 11¼″	4 – 11¼″	4 – 11¼″	4 – 11⅞″	4 – 11⅞″	4 – 14″	4 – 14″	4 – 14″	4 – 14″
	Order Length (ft)	32	34	36	32	34	36	32	34	36
	React. A (lbs)	3,995	4,160	4,400	5,100	5,265	5,480	6,200	6,345	6,690
	React. B (lbs)	2,080	2,180	2,330	2,645	2,750	2,870	3,210	3,290	3,535
20′	Hip Beam Depth	2 – 16″	2 – 16″	2 – 18″	2 – 18″	2 – 18″	2 – 18″	2 – 18″	—	—
		3 – 14″	3 – 14″	3 – 16″	3 – 16″	3 – 16″	3 – 18″	3 – 16″	3 – 16″	3 – 18″
		4 – 14″	4 – 14″	4 – 14″	4 – 14″	4 – 14″	4 – 14″	4 – 16″	4 – 16″	4 – 16″
	Order Length (ft)	34	36	40	34	36	40	34	38	40
	React. A (lbs)	4,960	5,135	5,540	6,375	6,600	7,020	7,745	7,930	8,350
	React. B (lbs)	2,600	2,695	2,985	3,350	3,490	3,795	4,050	4,160	4,460
22′	Hip Beam Depth	2 – 18″	2 – 18″	—	—	—	—	—	—	—
		3 – 16″	3 – 16″	3 – 18″	3 – 18″	3 – 18″	3 – 18″	3 – 18″	—	—
		4 – 14″	4 – 16″	4 – 16″	4 – 16″	4 – 16″	4 – 18″	4 – 18″	4 – 18″	4 – 18″
	Order Length (ft)	38	40	44	38	40	44	38	40	44
	React. A (lbs)	6,110	6,465	6,815	7,850	8,080	8,430	9,465	9,695	10,040
	React. B (lbs)	3,250	3,515	3,720	4,190	4,325	4,530	4,995	5,130	5,335
24′	Hip Beam Depth	—	—	—	—	—	—	—	—	—
		3 – 18″	3 – 18″	—	—	—	—	—	—	—
		4 – 16″	4 – 18″	4 – 18″	4 – 18″	4 – 18″	—	—	—	—
	Order Length (ft)	40	42	46	40	42	—	—	—	—
	React. A (lbs)	7,370	7,640	8,050	9,290	9,560	—	—	—	—
	React. B (lbs)	3,970	4,130	4,365	4,930	5,090	—	—	—	—

NOTES:

1. 2′-0″ maximum roof overhang assumed for order length.
2. Provide posts at both high end and low end to support Reactions A and B. Provide 3½″ minimum bearing at each end based on Douglas Fir-Larch or Southern Pine post or plate material.
3. The building designer must consider thrust resistant connections at bearing locations.
4. For non-equal roof slopes, use the greatest roof slope and the longest L distance.
5. Chart is based on triangular loading applied to the hip member. Live load is calculated as applied vertically to the horizontal projection of the rafter and dead load is calculated along the rafter length.
6. Size based on Roof Snow applications with a load duration factor of 115% and deflection criterion of L/240 live load and L/180 total load.
7. Refer to page 49 "Fastening Recommendations for Side-Loaded, Multiple-Piece Members." Use L distance to determine span-carried length or uniform loading.
8. Reactions include heaviest beam weight.
9. A structural ridge beam is assumed.

GP Lam® LVL Roof Valley Beam Chart

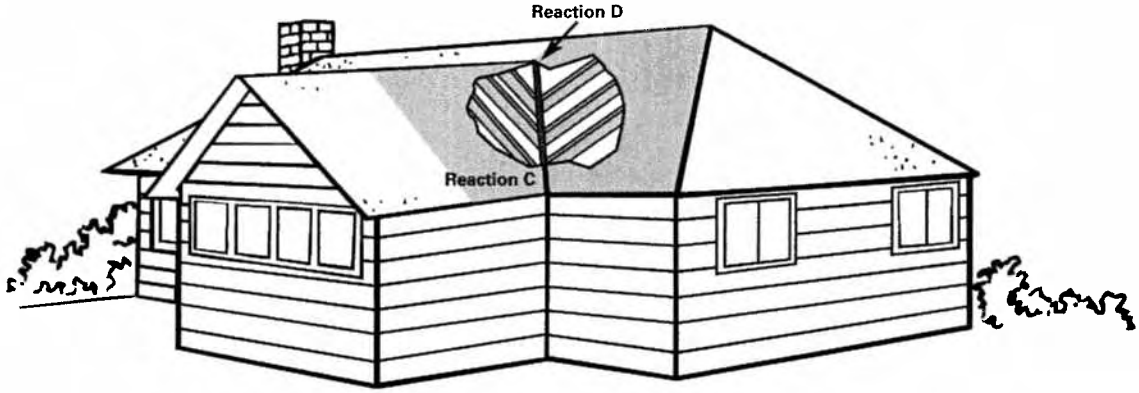

2.0E GP Lam LVL

Longest horizontal rafter span (L)		Roof Loading Snow (115%)								
		20 psf LL + 13 psf DL			30 psf LL + 13 psf DL			40 psf LL + 13 psf DL		
		Roof Slope			Roof Slope			Roof Slope		
		up to 4/12	up to 8/12	up to 12/12	up to 4/12	up to 8/12	up to 12/12	up to 4/12	up to 8/12	up to 12/12
12′	Valley Beam Depth	1 – 11¼″	1 – 11¼″	1 – 11¼″	1 – 11¼″	1 – 11¼″	1 – 11⅞″	1 – 11¼″	1 – 11⅞″	1 – 14″
		2 – 9¼″	2 – 9¼″	2 – 9¼″	2 – 9¼″	2 – 9¼″	2 – 9¼″	2 – 9¼″	2 – 9¼″	2 – 11½″
		3 – 9¼″	3 – 9¼″	3 – 9¼″	3 – 9¼″	3 – 9¼″	3 – 9¼″	3 – 9¼″	3 – 9¼″	3 – 9¼″
	Order Length (ft)	22	24	26	22	24	26	22	24	26
	React. C (lbs)	1,745	1,805	1,895	2,225	2,285	2,380	2,705	2,770	2,870
	React. D (lbs)	895	925	975	1,135	1,170	1,220	1,375	1,410	1,470
14′	Valley Beam Depth	1 – 14″	1 – 14″	1 – 14″	1 – 14″	1 – 14″	1 – 14″	1 – 14″	2 – 11⅞″	2 – 11⅞″
		2 – 9½″	2 – 11¼″	2 – 11¼″	2 – 11¼″	2 – 11¼″	2 – 11¼″	2 – 11¼″	3 – 11¼″	3 – 11¼″
		3 – 9¼″	3 – 9¼″	3 – 9¼″	3 – 9¼″	3 – 9½″	3 – 11¼″	3 – 11¼″	4 – 9¼″	4 – 9¼″
	Order Length (ft)	26	28	30	26	28	30	26	28	30
	React. C (lbs)	2,380	2,460	2,585	3,035	3,115	2,540	3,690	3,820	3,820
	React. D (lbs)	1,225	1,265	1,330	1,550	1,600	1,310	1,875	1,970	1,970
16′	Valley Beam Depth	2 – 11⅞″	2 – 11⅞″	2 – 14″	2 – 14″	2 – 14″	2 – 14″	2 – 14″	2 – 14″	2 – 16″
		3 – 11¼″	3 – 11¼″	3 – 11¼″	3 – 11¼″	3 – 11¼″	3 – 11¼″	3 – 11⅞″	3 – 11⅞″	3 – 14″
		4 – 9¼″	4 – 9½″	4 – 11¼″	4 – 11¼″	4 – 11¼″	4 – 11¼″	4 – 11¼″	4 – 11¼″	4 – 11⅞″
	Order Length (ft)	28	30	34	28	30	34	28	30	34
	React. C (lbs)	3,150	3,285	3,450	4,025	4,135	4,330	4,880	5,015	5,185
	React. D (lbs)	1,840	1,720	1,815	2,085	2,150	2,270	2,515	2,600	2,695
18′	Valley Beam Depth	2 – 14″	2 – 14″	2 – 16″	2 – 16″	2 – 16″	2 – 16″	2 – 16″	2 – 16″	2 – 18″
		3 – 11¾″	3 – 14″	3 – 14″	3 – 14″	3 – 14″	3 – 14″	3 – 14″	3 – 14″	3 – 16″
		4 – 11¼″	4 – 11¼″	4 – 11¼″	4 – 11⅞″	4 – 11⅞″	4 – 14″	4 – 14″	4 – 14″	4 – 14″
	Order Length (ft)	32	34	36	32	34	36	32	34	36
	React. C (lbs)	3,995	4,160	4,400	5,100	5,265	5,480	6,200	6,345	6,690
	React. D (lbs)	2,080	2,180	2,330	2,645	2,750	2,870	3,210	3,290	3,535
20′	Valley Beam Depth	2 – 16″	2 – 16″	2 – 18″	2 – 18″	2 – 18″	2 – 18″	2 – 18″	—	—
		3 – 14″	3 – 14″	3 – 16″	3 – 16″	3 – 16″	3 – 16″	3 – 16″	3 – 16″	3 – 18″
		4 – 14″	4 – 14″	4 – 14″	4 – 14″	4 – 14″	4 – 14″	4 – 16″	4 – 16″	4 – 16″
	Order Length (ft)	34	36	40	34	36	40	34	36	40
	React. C (lbs)	4,960	5,135	5,540	6,375	6,600	7,020	7,745	7,930	8,350
	React. D (lbs)	2,600	2,695	2,985	3,350	3,490	3,795	4,050	4,160	4,460
22′	Valley Beam Depth	2 – 18″	2 – 18″	—	—	—	—	—	—	
		3 – 16″	3 – 16″	3 – 18″	3 – 18″	3 – 18″	3 – 18″	3 – 18″	—	—
		4 – 14″	4 – 16″	4 – 16″	4 – 16″	4 – 16″	4 – 18″	4 – 18″	4 – 18″	4 – 18″
	Order Length (ft)	38	40	44	38	40	44	38	40	44
	React. C (lbs)	6,110	6,465	6,815	7,850	8,080	8,430	9,465	9,695	10,040
	React. D (lbs)	3,250	3,515	3,720	4,190	4,325	4,530	4,995	5,130	5,335
24′	Valley Beam Depth	—	—	—	—	—	—	—	—	—
		3 – 18″	3 – 18″	—	—	—	—	—	—	—
		4 – 16″	4 – 18″	4 – 18″	4 – 18″	4 – 18″	—	—	—	—
	Order Length (ft)	40	42	46	40	42	—	—	—	—
	React. C (lbs)	7,370	7,640	8,050	9,290	9,560	—	—	—	—
	React. D (lbs)	3,970	4,130	4,365	4,930	5,090	—	—	—	—

NOTES:

1. 2′-0″ maximum roof overhang assumed for order length.
2. Provide posts at both high end and low end to support Reactions C and D. Provide 3½″ minimum bearing at each end based on Douglas Fir-Larch or Southern Pine post or plate material.
3. The building designer must consider thrust resistant connections at bearing locations.
4. For non-equal roof slopes, use the greatest roof slope and the longest L distance.
5. Chart is based on triangular loading applied to the valley member. Live load is calculated as applied vertically to the horizontal projection of the rafter and dead load is calculated along the rafter length.
6. Size based on Roof Snow applications with a load duration factor of 115% and deflection criterion of L/240 live load and L/180 total load.
7. Refer to page 49 "Fastening Recommendations for Side-Loaded, Multiple-Piece Members." Use L distance to determine span-carried length or uniform loading.
8. Reactions include heaviest beam weight.
9. A structural ridge beam is assumed.

GP Lam® LVL Bearing Length Requirements (Inches)

Reaction (lbs)	Support Material															
	SPF South (335 PSI)				Hem-Fir (405 PSI)				Southern Pine (565 PSI)				GP Lam LVL (750 PSI)			
	Beam Thickness				Beam Thickness				Beam Thickness				Beam Thickness			
	1¾"	3½"	5¼"	7"	1¾"	3½"	5¼"	7"	1¾"	3½"	5¼"	7"	1¾"	3½"	5¼"	7"
1,000	1¾	1½	1½	1½	1½	1½	1½	1½	1½	1½	1½	1½	1½	1½	1½	1½
2,000	3½	1¾	1½	1½	3	1½	1½	1½	2¼	1½	1½	1½	1¾	1½	1½	1½
3,000	5¼	2¾	1¾	1½	4¼	2¼	1½	1½	3¼	1¾	1½	1½	2½	1½	1½	1½
4,000	7	3½	2½	1¾	5¾	3	2	1½	4¼	2¼	1½	1½	3¼	1¾	1½	1½
5,000	8¾	4½	3	2¼	7¼	3¾	2½	2	5¼	2¾	1¾	1½	4	2	1½	1½
6,000		5¼	3½	2¾	8½	4¼	3	2¼	6¼	3¼	2¼	1¾	4¾	2½	1¾	1½
7,000		6	4	3		5	3½	2½	7¼	3¾	2½	2	5½	2¾	2	1½
8,000		7	4¾	3½		5¾	4	3	8¼	4¼	2¾	2¼	6¼	3¼	2¼	1¾
9,000		7¾	5¼	4		6½	4¼	3¼	9¼	4¾	3¼	2½	7	3½	2½	1¾
10,000		8¼	5¾	4½		7¼	4¾	3¾		5¼	3½	2¾	7¾	4	2¾	2
11,000			6½	4¾		8	5¼	4		5¾	3¾	3	8½	4¼	3	2¼
12,000			7	5¼		8½	5¾	4¼		6¼	4¼	3¼	9¼	4¾	3¼	2½
13,000			7½	5¾		9¼	6¼	4¾		6¾	4½	3½		5	3½	2½
14,000			8	6			6¾	5		7¼	4¾	3¾		5½	3¾	2¾
15,000			8¾	6½			7¼	5½		7¾	5¼	4		5¾	4	3
16,000			9¼	7			7¾	5¾		8¼	5½	4¼		6¼	4¼	3¼
17,000				7¼			8	6		8¾	5¾	4½		6½	4½	3¼
18,000				7¾			8½	6½		9¼	6¼	4¾		7	4¾	3½
19,000				8¼			9	6¾			6½	5		7¼	5	3¾
20,000				8¾				7¼			6¾	5¼		7¾	5¼	4
21,000				9				7½			7¼	5½		8	5½	4
22,000								8			7½	5¾		8½	5¾	4¼
23,000								8¼			8	6		9	6	4½
24,000								8½			8¼	6¼		9¼	6¼	4¾

1. Minimum required bearing length is 1½".
2. Bearing across full width of beam or header is required.
3. Moisture content of lumber must not exceed 19%.
4. Confirmation of structural adequacy of supporting member is required.
5. Lateral support of GP Lam LVL is required at bearing points.
6. When plate material is of **Hem-Fir (North)**, use bearing lengths shown for SPF (South).
7. When plate material is of **Southern Pine graded non-dense** or of **SPF**, use bearing lengths shown for Hem-Fir .
8. When plate material is of **Douglas Fir-Larch** or **Doug Fir-Larch (North)**, use bearing lengths shown for Southern Pine.
9. When GP Lam LVL rests **on steel or in a hanger**, use bearing lengths shown for GP Lam LVL.
10. When GP Lam LVL rests directly **on end grain of studs or cripples** of the lumber listed above, use bearing lengths shown for GP Lam LVL multiplied by 1.2.
11. No reduction in bearing length is allowed for duration of load.

Using Allowable Uniform Load Tables (Floor and Roof)

1. **Tables are based on uniform loads, the more restrictive of simple or continuous spans (measured center-to-center), and dry-use conditions.** For other loads or span configurations, use FASTBeam® analysis & selection software or contact your BlueLinx representative.
2. Beam thickness is the net thickness of the beam. For multiple-piece members beam thickness may be achieved by properly connecting multiple plies of GP Lam® LVL lumber beams. See page 49 for connection details.
3. To size a beam it is necessary to check both live load and total load. Selected beam must work in both rows. When no live load is shown, total load will control, unless floor live load deflections other than L/360 are checked per note 4.
4. For floor live load deflection limits of L/480 or L/600, multiply the value in the floor 'LL' row (or 'TL' when 'LL' is not shown) by .75 or .60 respectively.
5. To size a member for a span not shown, use capacities for the next larger span shown (example: for 7' span, use values shown for 8' span).
6. Verify deflection limits with local building code requirements.
7. Bearing across full width of beam is assumed.
8. Assumes 565 psi bearing stress limited by douglas fir, southern yellow pine or other dense supporting material. For SPF or other less dense materials, either double the bearing length shown or refer to Bearing Length Requirements on page 40.
9. Bearing length may be adjusted if a beam is not fully loaded. For example, if 4.2" of bearing is required for a beam with maximum total load capacity of 1000 PLF yet the total design load is only 700 PLF the bearing length may be adjusted as follows: 700/1000 x 4.2 = 2.94" minimum (use 2 cripples for 3"). In no case may end bearing length be less than 1½" or intermediate bearing length be less than 3".
10. Provide lateral support at bearing points, and continuous lateral support along the top edge of beam.
11. **1¾" thick beams with depth greater than 14" must only be used in multiple-piece members.**
12. For 3 ply or 4 ply 7¼" GP Lam LVL, use 1¾" table and multiply by 3 or 4 respectively.
13. Roof members must slope for drainage.

EXAMPLE:

Select a GP Lam LVL beam to carry 520 PLF live load + 200 PLF dead load. Beam supports both floor and roof, and spans 10'.

When a beam carries floor and roof, use tables for floor loads; these tables are based on more stringent criteria than those used for roof loads. Use the table titled Floor 100%, on page 42. Adding 520 PLF and 200 PLF gives a total load of 720 PLF. Find 10' in the left most column. To the right are three rows showing Live Load L/360, Total Load and Minimum End and Minimum Interior Bearing requirements in inches. In the row marked Total Load, move to the right to locate a total load of at least 720 PLF. 1¾" x 11⅞" GP Lam LVL Beam can carry 745 PLF total load. Check live load capacity. 1¾" x 11⅞" can carry 629 PLF live load, so live load capacity is also adequate. Note required end bearing length is 3.8" and 9.5" for interior bearing of multiple spans. (See Note 9 above)

If less bearing length or a depth less than 11⅞" is desired, check the capacity of 3½" LVL beams. In the row marked Total Load, move farther to the right to locate a total load of at least 720 PLF. A 3½" wide x 9¼" deep member can carry 932 PLF total load. Check that live load capacity is at least 520 PLF. 3½" x 9¼" beams can carry 627 PLF, which is sufficient. Use 3½" x 9¼" deep. Required end bearing is 2.4" and 5.9" is required for interior bearing of multiple spans.

Allowable Uniform Loads — Floor 100%

2.0E GP Lam® LVL

Span (Ft)	Condition	Allowable Uniform Loads* (In Pounds Per Lineal Foot)														
		1¾" Thick GP Lam LVL Beams						3½" Thick GP Lam LVL Beams								
		7¼"	9¼"	9½"	11¼"	11⅞"	14"	7¼"	9¼"	9½"	11¼"	11⅞"	14"	16"	18"	23⅞"
6'	Live Load L/360	660						1319								
	Total Load	763	1028	1063	1325	1425	1576	1526	2056	2127	2650	2849	3151	3149	3147	3142
	End / Int. Bearing	2.3 / 5.8	3.1 / 7.8	3.2 / 8.1	4.0 / 10.1	4.3 / 10.8	4.8 / 12.0	2.3 / 5.8	3.1 / 7.8	3.2 / 8.1	4.0 / 10.1	4.3 / 10.8	4.8 / 12.0	4.8 / 12.0	4.8 / 12.0	4.8 / 12.0
8'	Live Load L/360	296	585	629				591	1169	1258						
	Total Load	440	723	746	916	979	1180	880	1446	1493	1831	1958	2360	2358	2356	2351
	End / Int. Bearing	1.8 / 4.5	2.9 / 7.4	3.0 / 7.6	3.7 / 9.3	4.0 / 10.0	4.8 / 12.0	1.8 / 4.5	2.9 / 7.4	3.0 / 7.6	3.7 / 9.3	4.0 / 10.0	4.8 / 12.0	4.8 / 12.0	4.8 / 12.0	4.8 / 12.0
10'	Live Load L/360	156	313	338	542	629		312	627	676	1084	1258				
	Total Load	230	466	503	699	745	909	461	932	1005	1398	1490	1818	1884	1882	1876
	End / Int. Bearing	1.5 / 3.0	2.4 / 5.9	2.6 / 6.4	3.6 / 8.9	3.8 / 9.5	4.6 / 11.6	1.5 / 3.0	2.4 / 5.9	2.6 / 6.4	3.6 / 8.9	3.8 / 9.5	4.6 / 11.6	4.8 / 12.0	4.8 / 12.0	4.8 / 12.0
11'	Live Load L/360	118	239	258	416	484	760	236	478	516	832	967	1519			
	Total Load	174	354	382	589	652	809	348	708	765	1178	1305	1618	1711	1709	1704
	End / Int. Bearing	1.5 / 3.0	2.0 / 5.0	2.2 / 5.4	3.3 / 8.3	3.7 / 9.1	4.5 / 11.3	1.5 / 3.0	2.0 / 5.0	2.2 / 5.4	3.3 / 8.3	3.7 / 9.1	4.5 / 11.3	4.8 / 12.0	4.8 / 12.0	4.8 / 12.0
12'	Live Load L/360	92	186	201	326	379	599	183	372	402	651	758	1198			
	Total Load	134	275	297	483	547	729	268	550	594	966	1095	1457	1567	1565	1560
	End / Int. Bearing	1.5 / 3.0	1.7 / 4.2	1.8 / 4.6	3.0 / 7.4	3.4 / 8.4	4.5 / 11.2	1.5 / 3.0	1.7 / 4.2	1.8 / 4.6	3.0 / 7.4	3.4 / 8.4	4.5 / 11.2	4.8 / 12.0	4.8 / 12.0	4.8 / 12.0
13'	Live Load L/360	73	148	160	259	302	480	145	295	319	519	605	961	1387		
	Total Load	105	217	235	384	448	636	211	434	470	768	896	1273	1446	1444	1438
	End / Int. Bearing	1.5 / 3.0	1.5 / 3.6	1.6 / 3.9	2.6 / 6.4	3.0 / 7.5	4.2 / 10.6	1.5 / 3.0	1.5 / 3.6	1.6 / 3.9	2.6 / 6.4	3.0 / 7.5	4.2 / 10.6	4.8 / 12.0	4.8 / 12.0	4.8 / 12.0
14'	Live Load L/360	58	119	129	210	245	390	117	238	257	420	490	781	1132		
	Total Load	84	174	189	309	362	548	168	349	377	619	724	1096	1341	1339	1334
	End / Int. Bearing	1.5 / 3.0	1.5 / 3.2	1.5 / 3.4	2.2 / 5.6	2.6 / 6.5	3.9 / 9.8	1.5 / 3.0	1.5 / 3.2	1.5 / 3.4	2.2 / 5.6	2.6 / 6.5	3.9 / 9.8	4.8 / 12.0	4.8 / 12.0	4.8 / 12.0
15'	Live Load L/360	48	97	105	172	201	321	95	195	211	344	402	643	935		
	Total Load	68	142	153	253	296	476	136	284	307	506	592	951	1228	1249	1243
	End / Int. Bearing	1.5 / 3.0	1.5 / 3.0	1.5 / 3.0	2.0 / 4.9	2.3 / 5.7	3.7 / 9.1	1.5 / 3.0	1.5 / 3.0	1.5 / 3.0	2.0 / 4.9	2.3 / 5.7	3.7 / 9.1	4.7 / 11.8	4.8 / 12.0	4.8 / 12.0
16'	Live Load L/360		81	87	143	167	268	79	161	174	285	334	535	781	1084	
	Total Load		117	126	209	245	395	111	233	253	418	490	790	1078	1170	1164
	End / Int. Bearing		1.5 / 3.0	1.5 / 3.0	1.7 / 4.3	2.0 / 5.1	3.2 / 8.1	1.5 / 3.0	1.5 / 3.0	1.5 / 3.0	1.7 / 4.3	2.0 / 5.1	3.2 / 8.1	4.4 / 11.0	4.8 / 12.0	4.8 / 12.0
17'	Live Load L/360		67	73	120	140	225	66	135	146	239	280	450	658	916	
	Total Load		97	105	174	204	331	92	194	210	349	409	662	953	1100	1095
	End / Int. Bearing		1.5 / 3.0	1.5 / 3.0	1.5 / 3.9	1.8 / 4.5	2.9 / 7.3	1.5 / 3.0	1.5 / 3.0	1.5 / 3.0	1.5 / 3.9	1.8 / 4.5	2.9 / 7.3	4.2 / 10.4	4.8 / 12.0	4.8 / 12.0
18'	Live Load L/360		57	62	101	119	191	56	114	123	203	237	382	560	781	
	Total Load		81	88	147	172	280	76	162	176	293	345	560	825	1038	1032
	End / Int. Bearing		1.5 / 3.0	1.5 / 3.0	1.5 / 3.5	1.6 / 4.0	2.6 / 6.5	1.5 / 3.0	1.5 / 3.0	1.5 / 3.0	1.5 / 3.5	1.6 / 4.0	2.6 / 6.5	3.8 / 9.6	4.8 / 12.0	4.8 / 12.0
19'	Live Load L/360		49	53	86	101	163	47	97	105	173	203	327	480	671	
	Total Load		69	75	124	146	239	64	137	149	249	293	477	705	951	977
	End / Int. Bearing		1.5 / 3.0	1.5 / 3.0	1.5 / 3.1	1.5 / 3.6	2.4 / 5.9	1.5 / 3.0	1.5 / 3.0	1.5 / 3.0	1.5 / 3.1	1.5 / 3.6	2.4 / 5.9	3.5 / 8.6	4.6 / 11.6	4.8 / 12.0
20'	Live Load L/360		42	45	74	87	141	41	84	90	149	174	282	414	580	
	Total Load		58	63	106	125	205	54	117	127	213	251	410	606	853	927
	End / Int. Bearing		1.5 / 3.0	1.5 / 3.0	1.5 / 3.0	1.5 / 3.3	2.1 / 5.3	1.5 / 3.0	1.5 / 3.0	1.5 / 3.0	1.5 / 3.0	1.5 / 3.3	2.1 / 5.3	3.1 / 7.9	4.4 / 11.0	4.8 / 12.0
22'	Live Load L/360				56	66	107		63	68	112	132	213	315	442	
	Total Load				79	93	154		86	94	158	187	307	457	646	841
	End / Int. Bearing				1.5 / 3.0	1.5 / 3.0	1.8 / 4.5		1.5 / 3.0	1.5 / 3.0	1.5 / 3.0	1.5 / 3.0	1.8 / 4.5	2.6 / 6.6	3.7 / 9.2	4.8 / 12.0
24'	Live Load L/360				43	51	83		49	53	87	102	166	244	344	
	Total Load				60	71	118		64	70	120	142	235	352	499	769
	End / Int. Bearing				1.5 / 3.0	1.5 / 3.0	1.5 / 3.8		1.5 / 3.0	1.5 / 3.0	1.5 / 3.0	1.5 / 3.0	1.5 / 3.8	2.2 / 5.6	3.1 / 7.8	4.8 / 12.0
26'	Live Load L/360					40	65			42	69	81	131	194	273	614
	Total Load					55	92			54	93	110	183	276	392	708
	End / Int. Bearing					1.5 / 3.0	1.5 / 3.2			1.5 / 3.0	1.5 / 3.0	1.5 / 3.0	1.5 / 3.2	1.9 / 4.8	2.7 / 6.7	4.8 / 12.0
28'	Live Load L/360						53				55	65	105	156	220	497
	Total Load						72				72	86	145	219	313	656
	End / Int. Bearing						1.5 / 3.0				1.5 / 3.0	1.5 / 3.0	1.5 / 3.0	1.7 / 4.1	2.3 / 5.8	4.8 / 12.0

*Can be applied to the beam in addition to its own weight.

See notes on page 41.

KEY TO TABLES

Live Load L/360 = Maximum live load — limits deflection to L/360

Total Load = Maximum total load — limits deflection to L/240

End / Int. Bearing = Required minimum end bearing (inches) for simple or multiple span beams and minimum interior bearing (inches) for multiple span beams based on plate bearing stress of 565 psi. See note 9 page 41.

Allowable Uniform Loads — Floor 100%

2.0E GP Lam® LVL

Span (Ft)	Condition	Allowable Uniform Loads* (In Pounds Per Lineal Foot)															
		5¼" Thick GP Lam LVL Beams								7" Thick GP Lam LVL Beams							
		9¼"	9½"	11¼"	11⅞"	14"	16"	18"	23¾"	9¼"	9½"	11¼"	11⅞"	14"	16"	18"	23¾"
6'	Live Load L/360																
	Total Load	3085	3190	3975	4274	4727	4724	4721	4713	4112	4254	5300	5698	6302	6298	6294	6284
	End / Int. Bearing	3.1 / 7.8	3.2 / 8.1	4.0 / 10.1	4.3 / 10.8	4.8 / 12.0	4.8 / 12.0	4.8 / 12.0	4.8 / 12.0	3.1 / 7.8	3.2 / 8.1	4.0 / 10.1	4.3 / 10.8	4.8 / 12.0	4.8 / 12.0	4.8 / 12.0	4.8 / 12.0
8'	Live Load L/360	1754	1887							2338	2516						
	Total Load	2169	2239	2747	2937	3540	3537	3534	3526	2892	2986	3662	3916	4720	4716	4712	4702
	End / Int. Bearing	2.9 / 7.4	3.0 / 7.6	3.7 / 9.3	4.0 / 10.0	4.8 / 12.0	4.8 / 12.0	4.8 / 12.0	4.8 / 12.0	2.9 / 7.4	3.0 / 7.6	3.7 / 9.3	4.0 / 10.0	4.8 / 12.0	4.8 / 12.0	4.8 / 12.0	4.8 / 12.0
10'	Live Load L/360	940	1014	1626	1887					1254	1352	2168	2516				
	Total Load	1397	1508	2097	2235	2728	2825	2822	2814	1864	2010	2796	2960	3636	3768	3764	3752
	End / Int. Bearing	2.4 / 5.9	2.6 / 6.4	3.6 / 8.9	3.8 / 9.5	4.6 / 11.6	4.8 / 12.0	4.8 / 12.0	4.8 / 12.0	2.4 / 5.9	2.6 / 6.4	3.6 / 8.9	3.8 / 9.5	4.6 / 11.6	4.8 / 12.0	4.8 / 12.0	4.8 / 12.0
11'	Live Load L/360	717	773	1248	1451	2279				956	1032	1664	1934	3038			
	Total Load	1062	1147	1767	1957	2427	2567	2564	2555	1416	1530	2356	2610	3236	3422	3418	3408
	End / Int. Bearing	2.0 / 5.0	2.2 / 5.4	3.3 / 8.3	3.7 / 9.1	4.5 / 11.3	4.8 / 12.0	4.8 / 12.0	4.8 / 12.0	2.0 / 5.0	2.2 / 5.4	3.3 / 8.3	3.7 / 9.1	4.5 / 11.3	4.8 / 12.0	4.8 / 12.0	4.8 / 12.0
12'	Live Load L/360	558	603	977	1137	1798				744	804	1302	1516	2396			
	Total Load	825	891	1449	1642	2186	2351	2348	2340	1100	1188	1932	2190	2914	3134	3130	3120
	End / Int. Bearing	1.7 / 4.2	1.8 / 4.6	3.0 / 7.4	3.4 / 8.4	4.5 / 11.2	4.8 / 12.0	4.8 / 12.0	4.8 / 12.0	1.7 / 4.2	1.8 / 4.6	3.0 / 7.4	3.4 / 8.4	4.5 / 11.2	4.8 / 12.0	4.8 / 12.0	4.8 / 12.0
13'	Live Load L/360	443	479	778	907	1441	2081			590	638	1038	1210	1922	2774		
	Total Load	652	705	1151	1344	1909	2168	2165	2157	868	940	1536	1792	2546	2892	2888	2876
	End / Int. Bearing	1.5 / 3.6	1.6 / 3.9	2.6 / 6.4	3.0 / 7.5	4.2 / 10.6	4.8 / 12.0	4.8 / 12.0	4.8 / 12.0	1.5 / 3.6	1.6 / 3.9	2.6 / 6.4	3.0 / 7.5	4.2 / 10.6	4.8 / 12.0	4.8 / 12.0	4.8 / 12.0
14'	Live Load L/360	357	386	629	735	1171	1698			476	514	840	980	1562	2264		
	Total Load	523	566	928	1086	1643	2012	2009	2001	698	754	1238	1448	2192	2682	2678	2668
	End / Int. Bearing	1.5 / 3.2	1.5 / 3.4	2.2 / 5.6	2.6 / 6.5	3.9 / 9.8	4.8 / 12.0	4.8 / 12.0	4.8 / 12.0	1.5 / 3.2	1.5 / 3.4	2.2 / 5.6	2.6 / 6.5	3.9 / 9.8	4.8 / 12.0	4.8 / 12.0	4.8 / 12.0
15'	Live Load L/360	292	316	516	603	964	1403			390	422	688	804	1286	1870		
	Total Load	425	460	758	888	1427	1842	1873	1865	568	614	1012	1184	1902	2456	2498	2486
	End / Int. Bearing	1.5 / 3.0	1.5 / 3.0	2.0 / 4.9	2.3 / 5.7	3.7 / 9.1	4.7 / 11.8	4.8 / 12.0	4.8 / 12.0	1.5 / 3.0	1.5 / 3.0	2.0 / 4.9	2.3 / 5.7	3.7 / 9.1	4.7 / 11.8	4.8 / 12.0	4.8 / 12.0
16'	Live Load L/360	242	262	428	501	803	1171	1626		322	348	570	668	1070	1562	2168	
	Total Load	350	379	626	734	1185	1616	1755	1746	466	506	836	980	1580	2156	2340	2328
	End / Int. Bearing	1.5 / 3.0	1.5 / 3.0	1.7 / 4.3	2.0 / 5.1	3.2 / 8.1	4.4 / 11.0	4.8 / 12.0	4.8 / 12.0	1.5 / 3.0	1.5 / 3.0	1.7 / 4.3	2.0 / 5.1	3.2 / 8.1	4.4 / 11.0	4.8 / 12.0	4.8 / 12.0
17'	Live Load L/360	202	219	359	420	675	987	1374		270	292	478	560	900	1316	1832	
	Total Load	291	315	523	613	993	1429	1650	1642	388	420	698	818	1324	1906	2200	2190
	End / Int. Bearing	1.5 / 3.0	1.5 / 3.0	1.5 / 3.9	1.8 / 4.5	2.9 / 7.3	4.2 / 10.4	4.8 / 12.0	4.8 / 12.0	1.5 / 3.0	1.5 / 3.0	1.5 / 3.9	1.8 / 4.5	2.9 / 7.3	4.2 / 10.4	4.8 / 12.0	4.8 / 12.0
18'	Live Load L/360	171	185	304	356	573	840	1171		228	246	406	474	764	1120	1562	
	Total Load	244	264	440	517	840	1237	1557	1549	324	352	586	690	1120	1650	2076	2064
	End / Int. Bearing	1.5 / 3.0	1.5 / 3.0	1.5 / 3.5	1.6 / 4.0	2.6 / 6.5	3.8 / 9.6	4.8 / 12.0	4.8 / 12.0	1.5 / 3.0	1.5 / 3.0	1.5 / 3.5	1.6 / 4.0	2.6 / 6.5	3.8 / 9.6	4.8 / 12.0	4.8 / 12.0
19'	Live Load L/360	146	158	259	304	490	720	1006		194	210	346	406	654	960	1342	
	Total Load	206	224	373	439	716	1057	1426	1465	274	298	498	586	954	1410	1902	1954
	End / Int. Bearing	1.5 / 3.0	1.5 / 3.0	1.5 / 3.1	1.5 / 3.6	2.4 / 5.9	3.5 / 8.6	4.6 / 11.6	4.8 / 12.0	1.5 / 3.0	1.5 / 3.0	1.5 / 3.1	1.5 / 3.6	2.4 / 5.9	3.5 / 8.6	4.6 / 11.6	4.8 / 12.0
20'	Live Load L/360	125	136	223	262	423	621	870		168	180	298	348	564	828	1160	
	Total Load	175	190	319	376	614	910	1280	1391	234	254	426	502	820	1212	1706	1854
	End / Int. Bearing	1.5 / 3.0	1.5 / 3.0	1.5 / 3.0	1.5 / 3.3	2.1 / 5.3	3.1 / 7.9	4.4 / 11.0	4.8 / 12.0	1.5 / 3.0	1.5 / 3.0	1.5 / 3.0	1.5 / 3.3	2.1 / 5.3	3.1 / 7.9	4.4 / 11.0	4.8 / 12.0
22'	Live Load L/360	95	102	169	198	320	472	663		126	136	224	264	426	630	884	
	Total Load	129	140	237	280	461	686	969	1261	172	188	316	374	614	914	1292	1682
	End / Int. Bearing	1.5 / 3.0	1.5 / 3.0	1.5 / 3.0	1.5 / 3.0	1.8 / 4.5	2.6 / 6.6	3.7 / 9.2	4.8 / 12.0	1.5 / 3.0	1.5 / 3.0	1.5 / 3.0	1.5 / 3.0	1.8 / 4.5	2.6 / 6.6	3.7 / 9.2	4.8 / 12.0
24'	Live Load L/360	73	79	130	153	248	367	516		98	106	174	204	332	488	688	
	Total Load	97	105	180	213	353	528	749	1153	128	140	240	284	470	704	998	1538
	End / Int. Bearing	1.5 / 3.0	1.5 / 3.0	1.5 / 3.0	1.5 / 3.0	1.5 / 3.8	2.2 / 5.6	3.1 / 7.8	4.8 / 12.0	1.5 / 3.0	1.5 / 3.0	1.5 / 3.0	1.5 / 3.0	1.5 / 3.8	2.2 / 5.6	3.1 / 7.8	4.8 / 12.0
26'	Live Load L/360	58	62	103	121	196	290	409	921	76	84	138	162	262	388	546	1228
	Total Load	73	80	139	165	275	413	589	1062	98	108	186	220	366	552	784	1416
	End / Int. Bearing	1.5 / 3.0	1.5 / 3.0	1.5 / 3.0	1.5 / 3.0	1.5 / 3.2	1.9 / 4.8	2.7 / 6.7	4.8 / 12.0	1.5 / 3.0	1.5 / 3.0	1.5 / 3.0	1.5 / 3.0	1.5 / 3.2	1.9 / 4.8	2.7 / 6.7	4.8 / 12.0
28'	Live Load L/360	46	50	83	97	158	234	330	746	62	66	110	130	210	312	440	994
	Total Load	56	62	108	129	217	328	470	984	76	82	144	172	290	438	626	1312
	End / Int. Bearing	1.5 / 3.0	1.5 / 3.0	1.5 / 3.0	1.5 / 3.0	1.5 / 3.0	1.7 / 4.1	2.3 / 5.8	4.8 / 12.0	1.5 / 3.0	1.5 / 3.0	1.5 / 3.0	1.5 / 3.0	1.5 / 3.0	1.7 / 4.1	2.3 / 5.8	4.8 / 12.0

*Can be applied to the beam in addition to its own weight.

See notes on page 41.

KEY TO TABLES

Live Load L/360 = Maximum live load — limits deflection to L/360

Total Load = Maximum total load — limits deflection to L/240

End / Int. Bearing = Required minimum end bearing (inches) for simple or multiple span beams and minimum interior bearing (inches) for multiple span beams based on plate bearing stress of 565 psi. See note 9 page 41.

Allowable Uniform Loads — Roof 115% (Snow)

2.0E GP Lam® LVL

Span (Ft)	Condition	Allowable Uniform Loads* (In Pounds Per Lineal Foot)														
		1¾" Thick GP Lam LVL Beams						3½" Thick GP Lam LVL Beams								
		7¼"	9¼"	9½"	11¼"	11⅞"	14"	7¼"	9¼"	9½"	11¼"	11⅞"	14"	16"	18"	23⅞"
6′	Live Load L/240															
	Total Load	878	1183	1224	1524	1577	1576	1756	2366	2447	3049	3153	3151	3149	3147	3142
	End / Int. Bearing	2.7 / 6.7	3.6 / 9.0	3.7 / 9.3	4.6 / 11.6	4.8 / 12.0	4.8 / 12.0	2.7 / 6.7	3.6 / 9.0	3.7 / 9.3	4.6 / 11.6	4.8 / 12.0	4.8 / 12.0	4.8 / 12.0	4.8 / 12.0	4.8 / 12.0
8′	Live Load L/240	444						887								
	Total Load	560	832	859	1054	1127	1180	1120	1664	1718	2108	2253	2360	2358	2356	2351
	End / Int. Bearing	2.3 / 5.7	3.4 / 8.5	3.5 / 8.7	4.3 / 10.7	4.6 / 11.4	4.8 / 12.0	2.3 / 5.7	3.4 / 8.5	3.5 / 8.7	4.3 / 10.7	4.6 / 11.4	4.8 / 12.0	4.8 / 12.0	4.8 / 12.0	4.8 / 12.0
10′	Live Load L/240	234	470	507				468	940	1014						
	Total Load	308	567	596	805	858	943	617	1134	1193	1609	1715	1885	1884	1882	1876
	End / Int. Bearing	1.6 / 3.9	2.9 / 7.2	3.0 / 7.6	4.1 / 10.2	4.4 / 10.9	4.8 / 12.0	1.6 / 3.9	2.9 / 7.2	3.0 / 7.6	4.1 / 10.2	4.4 / 10.9	4.8 / 12.0	4.8 / 12.0	4.8 / 12.0	4.8 / 12.0
11′	Live Load L/240	177	358	387	624	725		355	717	773	1248	1451				
	Total Load	233	468	492	678	751	856	466	935	984	1356	1502	1713	1711	1709	1704
	End / Int. Bearing	1.5 / 3.3	2.6 / 6.6	2.8 / 6.9	3.8 / 9.5	4.2 / 10.5	4.8 / 12.0	1.5 / 3.3	2.6 / 6.6	2.8 / 6.9	3.8 / 9.5	4.2 / 10.5	4.8 / 12.0	4.8 / 12.0	4.8 / 12.0	4.8 / 12.0
12′	Live Load L/240	138	279	301	488	569		275	558	603	977	1137				
	Total Load	180	368	398	569	630	785	360	736	795	1138	1261	1569	1567	1565	1560
	End / Int. Bearing	1.5 / 3.0	2.3 / 5.6	2.4 / 6.1	3.5 / 8.7	3.9 / 9.6	4.8 / 12.0	1.5 / 3.0	2.3 / 5.6	2.4 / 6.1	3.5 / 8.7	3.9 / 9.6	4.8 / 12.0	4.8 / 12.0	4.8 / 12.0	4.8 / 12.0
13′	Live Load L/240	109	222	239	389	454	720	218	443	479	778	907	1441			
	Total Load	142	291	315	484	536	724	283	582	629	968	1072	1447	1446	1444	1438
	End / Int. Bearing	1.5 / 3.0	1.9 / 4.9	2.1 / 5.2	3.2 / 8.0	3.6 / 8.9	4.8 / 12.0	1.5 / 3.0	1.9 / 4.9	2.1 / 5.2	3.2 / 8.0	3.6 / 8.9	4.8 / 12.0	4.8 / 12.0	4.8 / 12.0	4.8 / 12.0
14′	Live Load L/240	88	179	193	315	367	586	175	357	386	629	735	1171			
	Total Load	113	234	253	414	462	631	227	468	506	829	923	1262	1341	1339	1334
	End / Int. Bearing	1.5 / 3.0	1.7 / 4.2	1.8 / 4.6	3.0 / 7.4	3.3 / 8.3	4.5 / 11.3	1.5 / 3.0	1.7 / 4.2	1.8 / 4.6	3.0 / 7.4	3.3 / 8.3	4.5 / 11.3	4.8 / 12.0	4.8 / 12.0	4.8 / 12.0
15′	Live Load L/240	71	146	158	258	301	482	143	292	316	516	603	964			
	Total Load	92	190	206	339	396	549	184	381	412	677	793	1098	1251	1249	1243
	End / Int. Bearing	1.5 / 3.0	1.5 / 3.7	1.6 / 4.0	2.6 / 6.5	3.0 / 7.6	4.2 / 10.5	1.5 / 3.0	1.5 / 3.7	1.6 / 4.0	2.6 / 6.5	3.0 / 7.6	4.2 / 10.5	4.8 / 12.0	4.8 / 12.0	4.8 / 12.0
16′	Live Load L/240	59	121	131	214	250	401	118	242	262	428	501	803	1171		
	Total Load	75	157	170	280	328	482	151	314	340	560	656	963	1172	1170	1164
	End / Int. Bearing	1.5 / 3.0	1.5 / 3.3	1.5 / 3.5	2.3 / 5.8	2.7 / 6.7	3.9 / 9.9	1.5 / 3.0	1.5 / 3.3	1.5 / 3.5	2.3 / 5.8	2.7 / 6.7	3.9 / 9.9	4.8 / 12.0	4.8 / 12.0	4.8 / 12.0
17′	Live Load L/240	49	101	109	179	210	338	99	202	219	359	420	675	987		
	Total Load	62	131	142	234	274	426	125	261	283	468	549	852	1102	1100	1095
	End / Int. Bearing	1.5 / 3.0	1.5 / 3.0	1.5 / 3.1	2.1 / 5.1	2.4 / 6.0	3.7 / 9.3	1.5 / 3.0	1.5 / 3.0	1.5 / 3.1	2.1 / 5.1	2.4 / 6.0	3.7 / 9.3	4.8 / 12.0	4.8 / 12.0	4.8 / 12.0
18′	Live Load L/240	42	86	93	152	178	286	83	171	185	304	356	573	840		
	Total Load	52	110	119	197	232	375	104	220	238	395	463	751	978	1038	1032
	End / Int. Bearing	1.5 / 3.0	1.5 / 3.0	1.5 / 3.0	1.8 / 4.6	2.2 / 5.4	3.5 / 8.7	1.5 / 3.0	1.5 / 3.0	1.5 / 3.0	1.8 / 4.6	2.2 / 5.4	3.5 / 8.7	4.5 / 11.3	4.8 / 12.0	4.8 / 12.0
19′	Live Load L/240		73	79	130	152	245	71	146	158	259	304	490	720		
	Total Load		93	101	168	197	320	88	186	202	335	394	641	876	982	977
	End / Int. Bearing		1.5 / 3.0	1.5 / 3.0	1.7 / 4.2	1.9 / 4.9	3.1 / 7.8	1.5 / 3.0	1.5 / 3.0	1.5 / 3.0	1.7 / 4.2	1.9 / 4.9	3.1 / 7.8	4.3 / 10.7	4.8 / 12.0	4.8 / 12.0
20′	Live Load L/240		63	68	112	131	211	61	125	136	223	262	423	621	870	
	Total Load		79	86	144	169	275	74	159	172	287	338	550	789	932	927
	End / Int. Bearing		1.5 / 3.0	1.5 / 3.0	1.5 / 3.8	1.8 / 4.4	2.8 / 7.1	1.5 / 3.0	1.5 / 3.0	1.5 / 3.0	1.5 / 3.8	1.8 / 4.4	2.8 / 7.1	4.1 / 10.2	4.8 / 12.0	4.8 / 12.0
22′	Live Load L/240		47	51	84	99	160	46	95	102	169	198	320	472	663	
	Total Load		59	64	107	126	207	54	117	128	214	253	414	615	813	841
	End / Int. Bearing		1.5 / 3.0	1.5 / 3.0	1.5 / 3.1	1.5 / 3.7	2.4 / 5.9	1.5 / 3.0	1.5 / 3.0	1.5 / 3.0	1.5 / 3.1	1.5 / 3.7	2.4 / 5.9	3.5 / 8.8	4.6 / 11.5	4.8 / 12.0
24′	Live Load L/240				65	77	124		73	79	130	153	248	367	516	
	Total Load				82	97	159		89	97	164	193	318	474	671	769
	End / Int. Bearing				1.5 / 3.0	1.5 / 3.1	2.0 / 5.0		1.5 / 3.0	1.5 / 3.0	1.5 / 3.0	1.5 / 3.1	2.0 / 5.0	3.0 / 7.4	4.2 / 10.4	4.8 / 12.0
26′	Live Load L/240				51	60	98		58	62	103	121	196	290	409	
	Total Load				63	75	124		68	74	127	150	249	372	529	708
	End / Int. Bearing				1.5 / 3.0	1.5 / 3.0	1.7 / 4.3		1.5 / 3.0	1.5 / 3.0	1.5 / 3.0	1.5 / 3.0	1.7 / 4.3	2.5 / 6.4	3.6 / 9.0	4.8 / 12.0
28′	Live Load L/240				41	49	79		46	50	83	97	158	234	330	
	Total Load				50	59	99		53	58	100	118	197	297	423	656
	End / Int. Bearing				1.5 / 3.0	1.5 / 3.0	1.5 / 3.7		1.5 / 3.0	1.5 / 3.0	1.5 / 3.0	1.5 / 3.0	1.5 / 3.7	2.2 / 5.5	3.1 / 7.8	4.8 / 12.0

*Can be applied to the beam in addition to its own weight.

See notes on page 41.

KEY TO TABLES

Live Load L/240 = Maximum live load — limits deflection to L/240

Total Load = Maximum total load — limits deflection to L/180

End / Int. Bearing = Required minimum end bearing (inches) for simple or multiple span beams and minimum interior bearing (inches) for multiple span beams based on plate bearing stress of 565 psi. See note 9 page 41.

Allowable Uniform Loads — Roof 115% (Snow)

2.0E GP Lam® LVL

Span (Ft)	Condition	Allowable Uniform Loads* (In Pounds Per Lineal Foot)															
		5¼" Thick GP Lam LVL Beams								7" Thick GP Lam LVL Beams							
		9¼"	9½"	11¼"	11¾"	14"	16"	18"	23¾"	9¼"	9½"	11¼"	11¾"	14"	16"	18"	23¾"
6′	Live Load L/240																
	Total Load	3549	3671	4573	4730	4727	4724	4721	4713	4732	4894	6098	6306	6302	6298	6294	6284
	End / Int. Bearing	3.6 / 9.0	3.7 / 9.3	4.6 / 11.6	4.8 / 12.0	4.8 / 12.0	4.8 / 12.0	4.8 / 12.0	4.8 / 12.0	3.6 / 9.0	3.7 / 9.3	4.6 / 11.6	4.8 / 12.0	4.8 / 12.0	4.8 / 12.0	4.8 / 12.0	4.8 / 12.0
8′	Live Load L/240																
	Total Load	2496	2577	3161	3380	3540	3537	3534	3526	3328	3436	4216	4506	4720	4716	4712	4702
	End / Int. Bearing	3.4 / 8.5	3.5 / 8.7	4.3 / 10.7	4.6 / 11.4	4.8 / 12.0	4.8 / 12.0	4.8 / 12.0	4.8 / 12.0	3.4 / 8.5	3.5 / 8.7	4.3 / 10.7	4.6 / 11.4	4.8 / 12.0	4.8 / 12.0	4.8 / 12.0	4.8 / 12.0
10′	Live Load L/240	1410	1521							1880	2028						
	Total Load	1701	1789	2414	2573	2828	2825	2822	2814	2268	2386	3218	3430	3770	3768	3764	3752
	End / Int. Bearing	2.9 / 7.2	3.0 / 7.6	4.1 / 10.2	4.4 / 10.9	4.8 / 12.0	4.8 / 12.0	4.8 / 12.0	4.8 / 12.0	2.9 / 7.2	3.0 / 7.6	4.1 / 10.2	4.4 / 10.9	4.8 / 12.0	4.8 / 12.0	4.8 / 12.0	4.8 / 12.0
11′	Live Load L/240	1075	1160	1871	2176					1434	1546	2496	2902				
	Total Load	1403	1476	2034	2253	2569	2567	2564	2555	1870	1968	2712	3004	3426	3422	3418	3408
	End / Int. Bearing	2.6 / 6.6	2.8 / 6.9	3.8 / 9.5	4.2 / 10.5	4.8 / 12.0	4.8 / 12.0	4.8 / 12.0	4.8 / 12.0	2.6 / 6.6	2.8 / 6.9	3.8 / 9.5	4.2 / 10.5	4.8 / 12.0	4.8 / 12.0	4.8 / 12.0	4.8 / 12.0
12′	Live Load L/240	838	904	1465	1706					1116	1206	1954	2274				
	Total Load	1104	1193	1707	1891	2354	2351	2348	2340	1472	1590	2276	2522	3138	3134	3130	3120
	End / Int. Bearing	2.3 / 5.6	2.4 / 6.1	3.5 / 8.7	3.9 / 9.6	4.8 / 12.0	4.8 / 12.0	4.8 / 12.0	4.8 / 12.0	2.3 / 5.6	2.4 / 6.1	3.5 / 8.7	3.9 / 9.6	4.8 / 12.0	4.8 / 12.0	4.8 / 12.0	4.8 / 12.0
13′	Live Load L/240	665	718	1167	1361	2161				886	958	1556	1814	2882			
	Total Load	873	944	1452	1609	2171	2168	2165	2157	1164	1258	1936	2144	2894	2892	2888	2876
	End / Int. Bearing	1.9 / 4.9	2.1 / 5.2	3.2 / 8.0	3.6 / 8.9	4.8 / 12.0	4.8 / 12.0	4.8 / 12.0	4.8 / 12.0	1.9 / 4.9	2.1 / 5.2	3.2 / 8.0	3.6 / 8.9	4.8 / 12.0	4.8 / 12.0	4.8 / 12.0	4.8 / 12.0
14′	Live Load L/240	536	579	944	1102	1757				714	772	1258	1470	2342			
	Total Load	702	759	1243	1385	1893	2012	2009	2001	936	1012	1658	1846	2524	2682	2678	2668
	End / Int. Bearing	1.7 / 4.2	1.8 / 4.6	3.0 / 7.4	3.3 / 8.3	4.5 / 11.3	4.8 / 12.0	4.8 / 12.0	4.8 / 12.0	1.7 / 4.2	1.8 / 4.6	3.0 / 7.4	3.3 / 8.3	4.5 / 11.3	4.8 / 12.0	4.8 / 12.0	4.8 / 12.0
15′	Live Load L/240	438	474	774	904	1446				584	632	1032	1208	1928			
	Total Load	571	618	1016	1189	1646	1876	1873	1865	762	824	1354	1586	2196	2502	2498	2486
	End / Int. Bearing	1.5 / 3.7	1.6 / 4.0	2.6 / 6.5	3.0 / 7.6	4.2 / 10.5	4.8 / 12.0	4.8 / 12.0	4.8 / 12.0	1.5 / 3.7	1.6 / 4.0	2.6 / 6.5	3.0 / 7.6	4.2 / 10.5	4.8 / 12.0	4.8 / 12.0	4.8 / 12.0
16′	Live Load L/240	363	392	642	751	1204	1757			484	524	856	1002	1606	2342		
	Total Load	471	510	840	985	1445	1758	1755	1746	628	680	1120	1312	1926	2344	2340	2328
	End / Int. Bearing	1.5 / 3.3	1.5 / 3.5	2.3 / 5.8	2.7 / 6.7	3.9 / 9.9	4.8 / 12.0	4.8 / 12.0	4.8 / 12.0	1.5 / 3.3	1.5 / 3.5	2.3 / 5.8	2.7 / 6.7	3.9 / 9.9	4.8 / 12.0	4.8 / 12.0	4.8 / 12.0
17′	Live Load L/240	304	328	538	630	1013	1481			404	438	718	840	1350	1974		
	Total Load	392	425	702	823	1278	1653	1650	1642	522	566	936	1098	1704	2204	2200	2190
	End / Int. Bearing	1.5 / 3.0	1.5 / 3.1	2.1 / 5.1	2.4 / 6.0	3.7 / 9.3	4.8 / 12.0	4.8 / 12.0	4.8 / 12.0	1.5 / 3.0	1.5 / 3.1	2.1 / 5.1	2.4 / 6.0	3.7 / 9.3	4.8 / 12.0	4.8 / 12.0	4.8 / 12.0
18′	Live Load L/240	257	278	456	534	859	1259			342	370	608	712	1146	1680		
	Total Load	329	357	592	695	1126	1467	1557	1549	440	476	790	926	1502	1956	2076	2064
	End / Int. Bearing	1.5 / 3.0	1.5 / 3.0	1.8 / 4.6	2.2 / 5.4	3.5 / 8.7	4.5 / 11.3	4.8 / 12.0	4.8 / 12.0	1.5 / 3.0	1.5 / 3.0	1.8 / 4.6	2.2 / 5.4	3.5 / 8.7	4.5 / 11.3	4.8 / 12.0	4.8 / 12.0
19′	Live Load L/240	219	237	389	456	735	1060			292	316	518	608	980	1440		
	Total Load	279	302	503	591	961	1314	1474	1465	372	404	670	788	1282	1752	1964	1954
	End / Int. Bearing	1.5 / 3.0	1.5 / 3.0	1.7 / 4.2	1.9 / 4.9	3.1 / 7.8	4.3 / 10.7	4.8 / 12.0	4.8 / 12.0	1.5 / 3.0	1.5 / 3.0	1.7 / 4.2	1.9 / 4.9	3.1 / 7.8	4.3 / 10.7	4.8 / 12.0	4.8 / 12.0
20′	Live Load L/240	188	203	335	392	634	932	1305		250	272	446	524	846	1242	1740	
	Total Load	238	258	431	507	826	1184	1399	1391	318	344	574	676	1100	1578	1864	1854
	End / Int. Bearing	1.5 / 3.0	1.5 / 3.0	1.5 / 3.8	1.8 / 4.4	2.8 / 7.1	4.1 / 10.2	4.8 / 12.0	4.8 / 12.0	1.5 / 3.0	1.5 / 3.0	1.5 / 3.8	1.8 / 4.4	2.8 / 7.1	4.1 / 10.2	4.8 / 12.0	4.8 / 12.0
22′	Live Load L/240	142	154	253	297	480	708	994		190	204	338	396	640	944	1326	
	Total Load	176	191	322	379	621	922	1220	1261	234	256	428	506	828	1230	1626	1682
	End / Int. Bearing	1.5 / 3.0	1.5 / 3.0	1.5 / 3.1	1.5 / 3.7	2.4 / 5.9	3.5 / 8.8	4.6 / 11.5	4.8 / 12.0	1.5 / 3.0	1.5 / 3.0	1.5 / 3.1	1.5 / 3.7	2.4 / 5.9	3.5 / 8.8	4.6 / 11.5	4.8 / 12.0
24′	Live Load L/240	110	119	196	230	372	550	774		146	158	260	306	496	734	1032	
	Total Load	133	145	245	290	477	711	1007	1153	178	194	328	386	636	948	1342	1538
	End / Int. Bearing	1.5 / 3.0	1.5 / 3.0	1.5 / 3.0	1.5 / 3.1	2.0 / 5.0	3.0 / 7.4	4.2 / 10.4	4.8 / 12.0	1.5 / 3.0	1.5 / 3.0	1.5 / 3.0	1.5 / 3.1	2.0 / 5.0	3.0 / 7.4	4.2 / 10.4	4.8 / 12.0
26′	Live Load L/240	86	94	154	181	294	436	614		116	124	206	242	392	580	818	
	Total Load	102	111	190	225	373	559	793	1062	136	148	254	300	498	744	1058	1416
	End / Int. Bearing	1.5 / 3.0	1.5 / 3.0	1.5 / 3.0	1.5 / 3.0	1.7 / 4.3	2.5 / 6.4	3.6 / 9.0	4.8 / 12.0	1.5 / 3.0	1.5 / 3.0	1.5 / 3.0	1.5 / 3.0	1.7 / 4.3	2.5 / 6.4	3.6 / 9.0	4.8 / 12.0
28′	Live Load L/240	69	75	124	146	237	351	495		92	100	166	194	316	468	660	
	Total Load	79	87	150	178	296	445	634	984	106	116	200	236	394	594	846	1312
	End / Int. Bearing	1.5 / 3.0	1.5 / 3.0	1.5 / 3.0	1.5 / 3.0	1.5 / 3.7	2.2 / 5.5	3.1 / 7.8	4.8 / 12.0	1.5 / 3.0	1.5 / 3.0	1.5 / 3.0	1.5 / 3.0	1.5 / 3.7	2.2 / 5.5	3.1 / 7.8	4.8 / 12.0

*Can be applied to the beam in addition to its own weight.

See notes on page 41.

KEY TO TABLES

Live Load L/240 = Maximum live load — limits deflection to L/240

Total Load = Maximum total load — limits deflection to L/180

End / Int. Bearing = Required minimum end bearing (inches) for simple or multiple span beams and minimum interior bearing (inches) for multiple span beams based on plate bearing stress of 565 psi. See note 9 page 41.

Allowable Uniform Loads — Roof 125% (Non-Snow)

2.0E GP Lam® LVL

Span (Ft)	Condition	Allowable Uniform Loads* (In Pounds Per Lineal Foot)														
		1¾" Thick GP Lam LVL Beams						3½" Thick GP Lam LVL Beams								
		7¼"	9¼"	9½"	11¼"	11⅞"	14"	7¼"	9¼"	9½"	11¼"	11⅞"	14"	16"	18"	23¾"
6'	Live Load L/240															
	Total Load	955	1286	1330	1577	1577	1576	1909	2573	2661	3154	3153	3151	3149	3147	3142
	End / Int. Bearing	2.9 / 7.3	3.9 / 9.8	4.0 / 10.1	4.8 / 12.0	4.8 / 12.0	4.8 / 12.0	2.9 / 7.3	3.9 / 9.8	4.0 / 10.1	4.8 / 12.0	4.8 / 12.0	4.8 / 12.0	4.8 / 12.0	4.8 / 12.0	4.8 / 12.0
8'	Live Load L/240	444	877					887	1754							
	Total Load	588	905	934	1146	1181	1180	1176	1810	1868	2292	2362	2360	2358	2356	2351
	End / Int. Bearing	2.4 / 6.0	3.7 / 9.2	3.8 / 9.5	4.7 / 11.6	4.8 / 12.0	4.8 / 12.0	2.4 / 6.0	3.7 / 9.2	3.8 / 9.5	4.7 / 11.6	4.8 / 12.0	4.8 / 12.0	4.8 / 12.0	4.8 / 12.0	4.8 / 12.0
10'	Live Load L/240	234	470	507	813			468	940	1014	1626					
	Total Load	308	617	649	875	933	943	617	1233	1297	1750	1865	1885	1884	1882	1876
	End / Int. Bearing	1.6 / 3.9	3.1 / 7.8	3.3 / 8.3	4.5 / 11.1	4.7 / 11.9	4.8 / 12.0	1.6 / 3.9	3.1 / 7.8	3.3 / 8.3	4.5 / 11.1	4.7 / 11.9	4.8 / 12.0	4.8 / 12.0	4.8 / 12.0	4.8 / 12.0
11'	Live Load L/240	177	358	387	624	725		355	717	773	1248	1451				
	Total Load	233	474	511	737	817	856	466	947	1023	1475	1634	1713	1711	1709	1704
	End / Int. Bearing	1.5 / 3.3	2.7 / 6.6	2.9 / 7.2	4.1 / 10.3	4.6 / 11.4	4.8 / 12.0	1.5 / 3.3	2.7 / 6.6	2.9 / 7.2	4.1 / 10.3	4.6 / 11.4	4.8 / 12.0	4.8 / 12.0	4.8 / 12.0	4.8 / 12.0
12'	Live Load L/240	138	279	301	488	569		275	558	603	977	1137				
	Total Load	180	368	398	619	686	785	360	736	795	1238	1371	1569	1567	1565	1560
	End / Int. Bearing	1.5 / 3.0	2.3 / 5.6	2.4 / 6.1	3.8 / 9.5	4.2 / 10.5	4.8 / 12.0	1.5 / 3.0	2.3 / 5.6	2.4 / 6.1	3.8 / 9.5	4.2 / 10.5	4.8 / 12.0	4.8 / 12.0	4.8 / 12.0	4.8 / 12.0
13'	Live Load L/240	109	222	239	389	454	720	218	443	479	778	907	1441			
	Total Load	142	291	315	513	583	724	283	582	629	1027	1167	1447	1446	1444	1438
	End / Int. Bearing	1.5 / 3.0	1.9 / 4.9	2.1 / 5.2	3.4 / 8.5	3.9 / 9.7	4.8 / 12.0	1.5 / 3.0	1.9 / 4.9	2.1 / 5.2	3.4 / 8.5	3.9 / 9.7	4.8 / 12.0	4.8 / 12.0	4.8 / 12.0	4.8 / 12.0
14'	Live Load L/240	88	179	193	315	367	586	175	357	386	629	735	1171			
	Total Load	113	234	253	414	484	672	227	468	506	829	969	1343	1341	1339	1334
	End / Int. Bearing	1.5 / 3.0	1.7 / 4.2	1.8 / 4.6	3.0 / 7.4	3.5 / 8.7	4.8 / 12.0	1.5 / 3.0	1.7 / 4.2	1.8 / 4.6	3.0 / 7.4	3.5 / 8.7	4.8 / 12.0	4.8 / 12.0	4.8 / 12.0	4.8 / 12.0
15'	Live Load L/240	71	146	158	258	301	482	143	292	316	516	603	964			
	Total Load	92	190	206	339	396	597	184	381	412	677	793	1194	1251	1249	1243
	End / Int. Bearing	1.5 / 3.0	1.5 / 3.7	1.6 / 4.0	2.6 / 6.5	3.0 / 7.6	4.6 / 11.4	1.5 / 3.0	1.5 / 3.7	1.6 / 4.0	2.6 / 6.5	3.0 / 7.6	4.6 / 11.4	4.8 / 12.0	4.8 / 12.0	4.8 / 12.0
16'	Live Load L/240	59	121	131	214	250	401	118	242	262	428	501	803	1171		
	Total Load	75	157	170	280	328	524	151	314	340	560	656	1048	1172	1170	1164
	End / Int. Bearing	1.5 / 3.0	1.5 / 3.3	1.5 / 3.5	2.3 / 5.8	2.7 / 6.7	4.3 / 10.7	1.5 / 3.0	1.5 / 3.3	1.5 / 3.5	2.3 / 5.8	2.7 / 6.7	4.3 / 10.7	4.8 / 12.0	4.8 / 12.0	4.8 / 12.0
17'	Live Load L/240	49	101	109	179	210	338	99	202	219	359	420	675	987		
	Total Load	62	131	142	234	274	444	125	261	283	468	549	887	1102	1100	1095
	End / Int. Bearing	1.5 / 3.0	1.5 / 3.0	1.5 / 3.1	2.1 / 5.1	2.4 / 6.0	3.9 / 9.7	1.5 / 3.0	1.5 / 3.0	1.5 / 3.1	2.1 / 5.1	2.4 / 6.0	3.9 / 9.7	4.8 / 12.0	4.8 / 12.0	4.8 / 12.0
18'	Live Load L/240	42	86	93	152	178	286	83	171	185	304	356	573	840		
	Total Load	52	110	119	197	232	375	104	220	238	395	463	751	1040	1038	1032
	End / Int. Bearing	1.5 / 3.0	1.5 / 3.0	1.5 / 3.0	1.8 / 4.6	2.2 / 5.4	3.5 / 8.7	1.5 / 3.0	1.5 / 3.0	1.5 / 3.0	1.8 / 4.6	2.2 / 5.4	3.5 / 8.7	4.8 / 12.0	4.8 / 12.0	4.8 / 12.0
19'	Live Load L/240		73	79	130	152	245	71	146	158	259	304	490	720		
	Total Load		93	101	168	197	320	88	186	202	335	394	641	945	982	977
	End / Int. Bearing		1.5 / 3.0	1.5 / 3.0	1.7 / 4.2	1.9 / 4.9	3.1 / 7.8	1.5 / 3.0	1.5 / 3.0	1.5 / 3.0	1.7 / 4.2	1.9 / 4.9	3.1 / 7.8	4.8 / 11.5	4.8 / 12.0	4.8 / 12.0
20'	Live Load L/240		63	68	112	131	211	61	125	136	223	262	423	621	870	
	Total Load		79	86	144	169	275	74	159	172	287	338	550	814	932	927
	End / Int. Bearing		1.5 / 3.0	1.5 / 3.0	1.5 / 3.8	1.8 / 4.4	2.8 / 7.1	1.5 / 3.0	1.5 / 3.0	1.5 / 3.0	1.5 / 3.8	1.8 / 4.4	2.8 / 7.1	4.2 / 10.5	4.8 / 12.0	4.8 / 12.0
22'	Live Load L/240		47	51	84	99	160	46	95	102	169	198	320	472	663	
	Total Load		59	64	107	126	207	54	117	128	214	253	414	615	846	841
	End / Int. Bearing		1.5 / 3.0	1.5 / 3.0	1.5 / 3.1	1.5 / 3.7	2.4 / 5.9	1.5 / 3.0	1.5 / 3.0	1.5 / 3.0	1.5 / 3.1	1.5 / 3.7	2.4 / 5.9	3.5 / 8.8	4.8 / 12.0	4.8 / 12.0
24'	Live Load L/240				65	77	124		73	79	130	153	248	367	516	
	Total Load				82	97	159		89	97	164	193	318	474	671	769
	End / Int. Bearing				1.5 / 3.0	1.5 / 3.1	2.0 / 5.0		1.5 / 3.0	1.5 / 3.0	1.5 / 3.0	1.5 / 3.1	2.0 / 5.0	3.0 / 7.4	4.2 / 10.4	4.8 / 12.0
26'	Live Load L/240				51	60	98		58	62	103	121	196	290	409	
	Total Load				63	75	124		68	74	127	150	249	372	529	708
	End / Int. Bearing				1.5 / 3.0	1.5 / 3.0	1.7 / 4.3		1.5 / 3.0	1.5 / 3.0	1.5 / 3.0	1.5 / 3.0	1.7 / 4.3	2.5 / 6.4	3.6 / 9.0	4.8 / 12.0
28'	Live Load L/240				41	49	79		46	50	83	97	158	234	330	
	Total Load				50	59	99		53	58	100	118	197	297	423	656
	End / Int. Bearing				1.5 / 3.0	1.5 / 3.0	1.5 / 3.7		1.5 / 3.0	1.5 / 3.0	1.5 / 3.0	1.5 / 3.0	1.5 / 3.7	2.2 / 5.5	3.1 / 7.8	4.8 / 12.0

*Can be applied to the beam in addition to its own weight.

See notes on page 41.

KEY TO TABLES

Live Load L/240 = Maximum live load — limits deflection to L/240

Total Load = Maximum total load — limits deflection to L/180

End / Int. Bearing = Required minimum end bearing (inches) for simple or multiple span beams and minimum interior bearing (inches) for multiple span beams based on plate bearing stress of 565 psi. See note 9 page 41.

Allowable Uniform Loads — Roof 125% (Non-Snow)

2.0E GP Lam® LVL

Span (Ft)	Condition	Allowable Uniform Loads* (In Pounds Per Lineal Foot)															
		5¼" Thick GP Lam LVL Beams								7" Thick GP Lam LVL Beams							
		9¼"	9½"	11¼"	11⅞"	14"	16"	18"	23⅞"	9¼"	9½"	11¼"	11⅞"	14"	16"	18"	23⅞"
6'	Live Load L/240																
	Total Load	3859	3991	4730	4730	4727	4724	4721	4713	5146	5322	6308	6306	6302	6298	6294	6284
	End / Int. Bearing	3.9 / 9.8	4.0 / 10.1	4.8 / 12.0	4.8 / 12.0	4.8 / 12.0	4.8 / 12.0	4.8 / 12.0	4.8 / 12.0	3.9 / 9.8	4.0 / 10.1	4.8 / 12.0	4.8 / 12.0	4.8 / 12.0	4.8 / 12.0	4.8 / 12.0	4.8 / 12.0
8'	Live Load L/240	2631								3508							
	Total Load	2715	2802	3438	3543	3540	3537	3534	3526	3620	3736	4584	4724	4720	4716	4712	4702
	End / Int. Bearing	3.7 / 9.2	3.8 / 9.5	4.7 / 11.6	4.8 / 12.0	4.8 / 12.0	4.8 / 12.0	4.8 / 12.0	4.8 / 12.0	3.7 / 9.2	3.8 / 9.5	4.7 / 11.6	4.8 / 12.0	4.8 / 12.0	4.8 / 12.0	4.8 / 12.0	4.8 / 12.0
10'	Live Load L/240	1410	1521	2439						1880	2028	3252					
	Total Load	1850	1946	2625	2798	2828	2825	2822	2814	2466	2594	3500	3730	3770	3768	3764	3752
	End / Int. Bearing	3.1 / 7.8	3.3 / 8.3	4.5 / 11.1	4.7 / 11.9	4.8 / 12.0	4.8 / 12.0	4.8 / 12.0	4.8 / 12.0	3.1 / 7.8	3.3 / 8.3	4.5 / 11.1	4.7 / 11.9	4.8 / 12.0	4.8 / 12.0	4.8 / 12.0	4.8 / 12.0
11'	Live Load L/240	1075	1160	1871	2176					1434	1546	2496	2902				
	Total Load	1421	1534	2212	2451	2569	2567	2564	2555	1894	2046	2950	3268	3426	3422	3418	3408
	End / Int. Bearing	2.7 / 6.6	2.9 / 7.2	4.1 / 10.3	4.6 / 11.4	4.8 / 12.0	4.8 / 12.0	4.8 / 12.0	4.8 / 12.0	2.7 / 6.6	2.9 / 7.2	4.1 / 10.3	4.6 / 11.4	4.8 / 12.0	4.8 / 12.0	4.8 / 12.0	4.8 / 12.0
12'	Live Load L/240	838	904	1465	1706					1116	1206	1954	2274				
	Total Load	1104	1193	1856	2057	2354	2351	2348	2340	1472	1590	2476	2742	3138	3134	3130	3120
	End / Int. Bearing	2.3 / 5.6	2.4 / 6.1	3.8 / 9.5	4.2 / 10.5	4.8 / 12.0	4.8 / 12.0	4.8 / 12.0	4.8 / 12.0	2.3 / 5.6	2.4 / 6.1	3.8 / 9.5	4.2 / 10.5	4.8 / 12.0	4.8 / 12.0	4.8 / 12.0	4.8 / 12.0
13'	Live Load L/240	665	718	1167	1361	2161				886	958	1556	1814	2882			
	Total Load	873	944	1540	1750	2171	2168	2165	2157	1164	1258	2054	2334	2894	2892	2888	2876
	End / Int. Bearing	1.9 / 4.9	2.1 / 5.2	3.4 / 8.5	3.9 / 9.7	4.8 / 12.0	4.8 / 12.0	4.8 / 12.0	4.8 / 12.0	1.9 / 4.9	2.1 / 5.2	3.4 / 8.5	3.9 / 9.7	4.8 / 12.0	4.8 / 12.0	4.8 / 12.0	4.8 / 12.0
14'	Live Load L/240	536	579	944	1102	1757				714	772	1258	1470	2342			
	Total Load	702	759	1243	1453	2015	2012	2009	2001	936	1012	1658	1938	2686	2682	2678	2668
	End / Int. Bearing	1.7 / 4.2	1.8 / 4.6	3.0 / 7.4	3.5 / 8.7	4.8 / 12.0	4.8 / 12.0	4.8 / 12.0	4.8 / 12.0	1.7 / 4.2	1.8 / 4.6	3.0 / 7.4	3.5 / 8.7	4.8 / 12.0	4.8 / 12.0	4.8 / 12.0	4.8 / 12.0
15'	Live Load L/240	438	474	774	904	1446				584	632	1032	1206	1928			
	Total Load	571	618	1016	1189	1791	1878	1873	1865	762	824	1354	1586	2388	2502	2498	2486
	End / Int. Bearing	1.5 / 3.7	1.6 / 4.0	2.6 / 6.5	3.0 / 7.6	4.6 / 11.4	4.8 / 12.0	4.8 / 12.0	4.8 / 12.0	1.5 / 3.7	1.6 / 4.0	2.6 / 6.5	3.0 / 7.6	4.6 / 11.4	4.8 / 12.0	4.8 / 12.0	4.8 / 12.0
16'	Live Load L/240	363	392	642	751	1204	1757			484	524	856	1002	1606	2342		
	Total Load	471	510	840	985	1572	1758	1755	1746	628	680	1120	1312	2096	2344	2340	2328
	End / Int. Bearing	1.5 / 3.3	1.5 / 3.5	2.3 / 5.8	2.7 / 6.7	4.3 / 10.7	4.8 / 12.0	4.8 / 12.0	4.8 / 12.0	1.5 / 3.3	1.5 / 3.5	2.3 / 5.8	2.7 / 6.7	4.3 / 10.7	4.8 / 12.0	4.8 / 12.0	4.8 / 12.0
17'	Live Load L/240	304	328	538	630	1013	1481			404	438	718	840	1350	1974		
	Total Load	392	425	702	823	1331	1653	1650	1642	522	566	936	1098	1774	2204	2200	2190
	End / Int. Bearing	1.5 / 3.0	1.5 / 3.1	2.1 / 5.1	2.4 / 6.0	3.9 / 9.7	4.8 / 12.0	4.8 / 12.0	4.8 / 12.0	1.5 / 3.0	1.5 / 3.1	2.1 / 5.1	2.4 / 6.0	3.9 / 9.7	4.8 / 12.0	4.8 / 12.0	4.8 / 12.0
18'	Live Load L/240	257	278	456	534	859	1259			342	370	608	712	1146	1680		
	Total Load	329	357	592	695	1126	1560	1557	1549	440	476	790	926	1502	2080	2076	2064
	End / Int. Bearing	1.5 / 3.0	1.5 / 3.0	1.8 / 4.6	2.2 / 5.4	3.5 / 8.7	4.8 / 12.0	4.8 / 12.0	4.8 / 12.0	1.5 / 3.0	1.5 / 3.0	1.8 / 4.6	2.2 / 5.4	3.5 / 8.7	4.8 / 12.0	4.8 / 12.0	4.8 / 12.0
19'	Live Load L/240	219	237	389	456	735	1080			292	316	518	608	980	1440		
	Total Load	279	302	503	591	961	1417	1474	1465	372	404	670	788	1282	1890	1964	1954
	End / Int. Bearing	1.5 / 3.0	1.5 / 3.0	1.7 / 4.2	1.9 / 4.9	3.1 / 7.8	4.6 / 11.5	4.8 / 12.0	4.8 / 12.0	1.5 / 3.0	1.5 / 3.0	1.7 / 4.2	1.9 / 4.9	3.1 / 7.8	4.6 / 11.5	4.8 / 12.0	4.8 / 12.0
20'	Live Load L/240	188	203	335	392	634	932	1305		250	272	446	524	846	1242	1740	
	Total Load	238	258	431	507	826	1220	1399	1391	318	344	574	676	1100	1628	1864	1854
	End / Int. Bearing	1.5 / 3.0	1.5 / 3.0	1.5 / 3.8	1.8 / 4.4	2.8 / 7.1	4.2 / 10.5	4.8 / 12.0	4.8 / 12.0	1.5 / 3.0	1.5 / 3.0	1.5 / 3.8	1.8 / 4.4	2.8 / 7.1	4.2 / 10.5	4.8 / 12.0	4.8 / 12.0
22'	Live Load L/240	142	154	253	297	480	708	994		190	204	338	396	640	944	1326	
	Total Load	176	191	322	379	621	922	1269	1261	234	256	428	506	828	1230	1692	1682
	End / Int. Bearing	1.5 / 3.0	1.5 / 3.0	1.5 / 3.1	1.5 / 3.7	2.4 / 5.9	3.5 / 8.8	4.8 / 12.0	4.8 / 12.0	1.5 / 3.0	1.5 / 3.0	1.5 / 3.1	1.5 / 3.7	2.4 / 5.9	3.5 / 8.8	4.8 / 12.0	4.8 / 12.0
24'	Live Load L/240	110	119	196	230	372	550	774		146	158	260	306	496	734	1032	
	Total Load	133	145	245	290	477	711	1007	1153	178	194	328	386	636	948	1342	1538
	End / Int. Bearing	1.5 / 3.0	1.5 / 3.0	1.5 / 3.0	1.5 / 3.1	2.0 / 5.0	3.0 / 7.4	4.2 / 10.4	4.8 / 12.0	1.5 / 3.0	1.5 / 3.0	1.5 / 3.0	1.5 / 3.1	2.0 / 5.0	3.0 / 7.4	4.2 / 10.4	4.8 / 12.0
26'	Live Load L/240	86	94	154	181	294	436	614		116	124	206	242	392	580	818	
	Total Load	102	111	190	225	373	559	793	1062	136	148	254	300	498	744	1058	1416
	End / Int. Bearing	1.5 / 3.0	1.5 / 3.0	1.5 / 3.0	1.5 / 3.0	1.7 / 4.3	2.5 / 6.4	3.6 / 9.0	4.8 / 12.0	1.5 / 3.0	1.5 / 3.0	1.5 / 3.0	1.5 / 3.0	1.7 / 4.3	2.5 / 6.4	3.6 / 9.0	4.8 / 12.0
28'	Live Load L/240	69	75	124	146	237	351	495		92	100	166	194	316	468	660	
	Total Load	79	87	150	178	296	445	634	984	106	116	200	236	394	594	846	1312
	End / Int. Bearing	1.5 / 3.0	1.5 / 3.0	1.5 / 3.0	1.5 / 3.0	1.5 / 3.7	2.2 / 5.5	3.1 / 7.8	4.8 / 12.0	1.5 / 3.0	1.5 / 3.0	1.5 / 3.0	1.5 / 3.0	1.5 / 3.7	2.2 / 5.5	3.1 / 7.8	4.8 / 12.0

*Can be applied to the beam in addition to its own weight.

See notes on page 41.

KEY TO TABLES

Live Load L/240 = Maximum live load — limits deflection to L/240

Total Load = Maximum total load — limits deflection to L/180

End / Int. Bearing = Required minimum end bearing (inches) for simple or multiple span beams and minimum interior bearing (inches) for multiple span beams based on plate bearing stress of 565 psi. See note 9 page 41.

General Notes for Multiple-Piece GP Lam® LVL Members

1. Confirm adequacy of the beam (depth and thickness) for carrying the designated load.
2. Stress level for nail, bolt, and screw values is 100%. Increases of 15% for snow loaded roof conditions or 25% for non-snow roof conditions are permitted.
3. Top and bottom rows of fasteners should be 2″ from edge. Minimum end distance for all fasteners is 2″. Maximum end distance for nails is 6″ and for screws and bolts is 12″. For staggered fastening patterns for screws and bolts, the maximum end distance of 12″ applies to both rows.
4. Bolt holes are to be 1/32″ to 1/16″ larger diameter than the bolt. Bolts must meet or exceed ASTM A 307 or SAE Grade 2. Every bolt must extend through the full thickness of the member. Use washers under head and nut. Carriage bolts may be used, but the outermost portion of the head may not be drawn in beyond flush with the outside face of the LVL member.
5. For three-piece members attached with nails or screws, specified attachment is from each side.
6. To minimize rotation, 4-ply members should only be used when loads are applied to both sides, or completely across the top of the member.
7. 4-ply members, regardless of depth, must be attached using bolts or screws.

Fastening Recommendations for Top-Loaded, Multiple-Piece Members[1]

Member Depth	2-Ply	3-Ply	4-Ply
7¼″-11⅞″	2 rows 16d nails at 12″ o.c.	2 rows 16d nails at 12″ o.c.[3]	2 rows ½″ bolts at 24″ o.c.[2], or 2 rows ¼″ x 6″ WS or SDS screws at 24″ o.c.[2,3,4], or
14″-23⅞″	3 rows 16d nails at 12″ o.c.	3 rows 16d nails at 12″ o.c.[3]	2 rows ¼″ x 6¾″ TrussLok™ screws at 24″ o.c.[2,5]

1. See page 49 for diagrams corresponding to these fastening patterns. For top-loaded nailed multiple-piece members, nails can be 16d box, 16d sinkers, or 16d commons.
2. Stagger each row of fasteners by 12″.
3. Specified attachment is from each side.
4. United Steel Products WS series or Simpson Strong-Tie® SDS series screws installed per manufacturer's recommendations.
5. FastenMaster® TrussLok™ screws installed per manufacturer's recommendations. Do not overtighten screws in an attempt to countersink them.

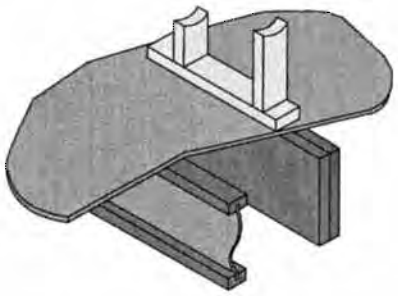

Wall of same thickness as multiple-piece GP Lam LVL and centered over beam. Multiple-piece LVL beam should not be placed directly below plumbing walls. LVL beams are not to be notched or drilled except as noted on pages 34 and 50-54.

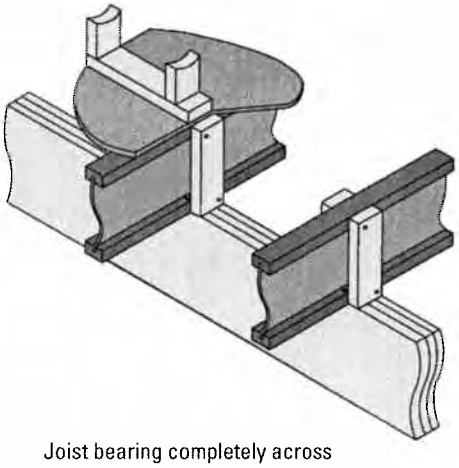

Joist bearing completely across top of multiple-piece beam

Top-loaded conditions may result from I-joist details similar to F9, F10 and R3.
In details F9 and F10, the supporting wall may be replaced with properly sized multiple-piece GP Lam LVL.

Fastening Recommendations for Side-Loaded, Multiple-Piece Members

Maximum Uniform Load Applied to Either or Both Outside Pieces (Pounds per lineal foot)

Refer to General Notes page 48.

- Numbers in the chart indicate load, in pounds per lineal foot which may be applied to either side based solely on the connection.
- Floor joists must be attached with approved metal hangers. Refer to pages 16, 52 and 53 for hanger recommendations.
- Concentrated side loads from beam to beam connections may require additional consideration.

Fasteners	2-Ply	3-Ply	4-Ply
16d Common Nails 2 Rows @ 12" o.c.[1]	505 plf	380plf	Not Recommended
16d Common Nails 3 Rows @ 12" o.c.[1]	760 plf	570 plf	Not Recommended
1/4"x3 1/2" Screws 2 Rows @ 24" o.c. Staggered[2,3,4]	500 plf	375 plf	330 plf
1/4"x3 1/2" Screws 2 Rows @ 12" o.c.[1,3,4]	995 plf	745 plf	665 plf
TrussLok™ Screws 2 Rows @ 24" o.c. Staggered[2,5]	525 plf	375 plf	335 plf
1/2" Bolts 2 Rows @ 24" o.c. Staggered[2]	505 plf	380 plf	340 plf
1/2" Bolts 2 Rows @ 12" o.c.[1]	1015 plf	760 plf	675 plf

1. Values for connections may be factored for spacings other than 12" o.c., double for 6" o.c., triple for 4" o.c., divide by 1.33 for 16" o.c., divide by 2 for 24" o.c. (Maximum spacing not to exceed 24" o.c. for screws and bolts or 16" o.c. for nails.)
2. Stagger each row of fasteners by 12".
3. Screws are United Steel Products WS Series or Simpson Strong-Tie® SDS Series installed per manufacturer's recommendations.
4. For 4-ply members, screws must be 6" long and applied from both sides.
5. Use FastenMaster® TrussLok™ screws—3⅜" long for 2-ply, 5" long for 3-ply, or 6¾" long for 4-ply. Connection values may be doubled for 12" on-center spacing. Install per manufacturer's recommendations. Do not overtighten screws in an attempt to countersink them.

Tapered Cut Allowable End Reaction—Truss Roof

3½" Thick GP Lam® LVL Beams Allowable End Reaction (lbs)

GP Lam LVL Floor Depth	Truss Chord Size	Beam Bearing Length	Truss Slope 4/12		6/12		8/12		10/12		12/12	
			$D_{outside}$ (inches)	Reaction (lbs)	$D_{outside}$ (inches)	Reaction (lbs)	$D_{outside}$ (inches)	Reaction (lbs)	$D_{outside}$ (inches)	Reaction (lbs)	$D_{outside}$ (inches)	Reaction (lbs)
7¼"	2x4	3½"	3 15/16	3395	4 3/16	4419	4 7/16	4790	4 13/16	OK	5 3/16	OK
		5¼"	3 15/16	3967	4 3/16	4779	4 7/16	OK	4 13/16	OK	5 3/16	OK
	2x6	3½"	6 1/16	4821	6 3/8	OK	6 7/8	OK	7 1/4	OK	7 1/4	OK
		5¼"	6 1/16	OK	6 3/8	OK	6 7/8	OK	7 1/4	OK	7 1/4	OK
9¼" or 9½"	2x4	3½"	3 15/16	3395	4 3/16	3932	4 7/16	5238	4 13/16	5910	5 3/16	6128
		5¼"	3 15/16	3783	4 3/16	4877	4 7/16	5941	4 13/16	6151	5 3/16	OK
	2x6	3½"	6 1/16	4873	6 3/8	5953	6 7/8	6151	7 3/16	OK	8	OK
		5¼"	6 1/16	5576	6 3/8	6144	6 7/8	OK	7 3/16	OK	8	OK
11¼" or 11⅞"	2x4	3½"	3 15/16	—	4 3/16	3932	4 7/16	4515	4 13/16	6115	5 3/16	6921
		5¼"	3 15/16	—	4 3/16	4514	4 7/16	5972	4 13/16	7109	5 3/16	7440
	2x6	3½"	6 1/16	4797	6 3/8	5631	6 7/8	6921	7 7/16	6921	8	6921
		5¼"	6 1/16	5185	6 3/8	6699	6 7/8	7405	7 7/16	7896	8	OK
14"	2x4	3½"	3 15/16	—	4 3/16	—	4 7/16	—	4 13/16	5136	5 3/16	6921
		5¼"	3 15/16	—	4 3/16	—	4 7/16	—	4 13/16	7291	5 3/16	8508
	2x6	3½"	6 1/16	4797	6 3/8	5419	6 7/8	6803	7 7/16	6921	8	6921
		5¼"	6 1/16	5185	6 3/8	6001	6 7/8	8034	7 7/16	8978	8	9284
16"	2x6	3½"	6 1/16	4797	6 3/8	5419	6 7/8	6114	7 7/16	6921	8	6921
		5¼"	6 1/16	5185	6 3/8	6001	6 7/8	7577	7 7/16	9437	8	10269
18"	2x6	3½"	6 1/16	4797	6 3/8	5419	6 7/8	6114	7 7/16	6867	8	6921
		5¼"	6 1/16	5185	6 3/8	6001	6 7/8	6890	7 7/16	9354	8	10382
23⅞"	2x6	3½"	6 1/16	—	6 3/8	—	6 7/8	—	7 7/16	—	8	6921
		5¼"	6 1/16	—	6 3/8	—	6 7/8	—	7 7/16	—	8	8830

NOTES:

1. Prior to using this chart, beam size must be checked by tables or FASTBeam® software.
2. Chart can also be used for 1¾", 5¼" and 7" thick GP Lam LVL beams
   - For 1¾" thick beam: ½ x allowable reaction (lbs)
   - For 5¼" thick beam: 1½ x allowable reaction (lbs)
   - For 7" thick beam: 2 x allowable reaction (lbs)
3. Provide lateral support at bearing points, and continuous lateral support along top edge of beam.
4. Special consideration is required for uplift reactions.
5. Concentrated loads are not allowed in the tapered cut region.
6. Southern Pine bearing plate assumed. (Allowable bearing stress 565 psi).
7. Values are for floor use, 100% duration of load increase.
8. ¼" butt cut height assumed for truss bottom chord.
9. If OK is shown in Reaction column, full capacity is available.
10. If no allowable reaction is shown, beam will not work with current input; try using a shallower beam with additional plies.
11. Field verify slope and all dimensions.

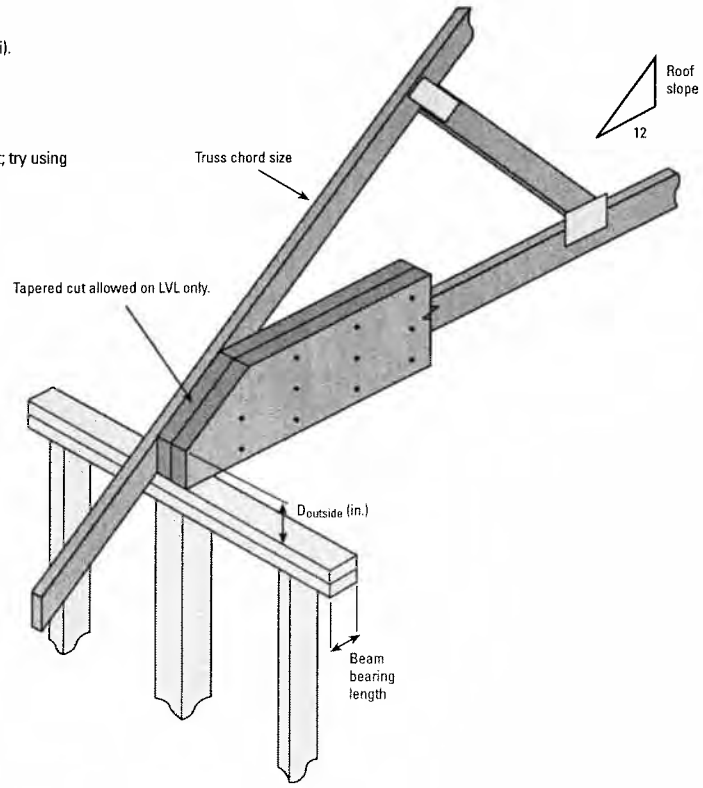

Tapered Cut Allowable End Reaction—Conventional (Stick) Roof

3½" Thick GP Lam® LVL Beams Allowable End Reaction (lbs)

GP Lam® LVL Floor Depth	Rafter Size	Beam Bearing Length	Rafter Slope 4/12		6/12		8/12		10/12		12/12	
			$D_{outside}$ (inches)	Reaction (lbs)	$D_{outside}$ (inches)	Reaction (lbs)	$D_{outside}$ (inches)	Reaction (lbs)	$D_{outside}$ (inches)	Reaction (lbs)	$D_{outside}$ (inches)	Reaction (lbs)
7¼"	2x6	3½"	4⅝	4095	4⅜	4559	4¼	4759	4¼	4820	4¼	OK
		5¼"	4 1/16	4095	3½	4559	3⅛	4759	2 13/16	4820	2½	OK
	2x8	3½"	6½	OK	6⅜	OK	6⅜	OK	6½	OK	6¾	OK
		5¼"	5⅞	OK	5½	OK	5 3/16	OK	5 1/16	OK	5	OK
9¼" or 9½"	2x6	3½"	4⅝	3855	4⅜	4089	4¼	5057	4¼	5684	4¼	5966
		5¼"	4 1/16	3855	3½	4089	3⅛	—	2 13/16	—	2½	—
	2x8	3½"	6½	5416	6⅜	5936	6⅜	6118	6½	6317	6¾	OK
		5¼"	5⅞	5416	5½	5936	5 3/16	6118	5 1/16	6317	5	OK
	2x10	3½"	8 9/16	OK	8 5/16	OK	8 13/16	OK	9¼	OK	9¼	OK
		5¼"	8	OK	7 11/16	OK	7⅝	OK	7 13/16	OK	7 13/16	OK
11¼" or 11⅞"	2x6	3½"	4⅝	3855	4⅜	4089	4¼	4396	4¼	5418	4¼	6451
		5¼"	4 1/16	3855	3½	—	3⅛	—	2 13/16	—	2½	—
	2x8	3½"	6½	5082	6⅜	5566	6⅜	6745	6½	6921	6¾	6921
		5¼"	5⅞	5082	5½	5566	5 3/16	6745	5 1/16	7203	5	7417
	2x10	3½"	8 9/16	6921	8 5/16	6921	8 13/16	6921	9¼	OK	9 5/16	OK
		5¼"	8	6973	7 11/16	7375	7⅝	7480	7 11/16	OK	7 13/16	OK
	2x12	3½"	10 11/16	6921	10 13/16	OK	11 3/16	OK	11¼	OK	11¼	OK
		5¼"	10⅛	7897	9 15/16	OK	10	OK	10¼	OK	10 11/16	OK
14"	2x8	3½"	6½	5082	6⅜	5390	6⅜	6111	6½	6921	6¾	6921
		5¼"	5⅞	5082	5½	5390	5 3/16	6111	5 1/16	7550	5	8399
	2x10	3½"	8 9/16	6484	8 5/16	6921	8 13/16	6921	9⅛	6921	9 5/16	6921
		5¼"	8	6484	7 11/16	7589	7⅝	8564	7 11/16	9056	7 13/16	9267
	2x12	3½"	10 11/16	6921	10 13/16	6921	11 3/16	6921	11¾	OK	12 7/16	OK
		5¼"	10⅛	8539	9 15/16	9096	10	9293	10¼	OK	10 11/16	OK
16"	2x8	3½"	6½	5082	6⅜	5390	6⅜	5794	6½	6276	6¾	6921
		5¼"	5⅞	5082	5½	5390	5 3/16	—	5 1/16	—	5	—
	2x10	3½"	8 9/16	6484	8 5/16	6877	8 13/16	6921	9⅛	6921	9 5/16	6921
		5¼"	8	6484	7 11/16	6877	7⅝	8501	7 11/16	9601	7 13/16	10207
	2x12	3½"	10 11/16	6921	10 13/16	6921	11 3/16	6921	11¾	6921	12 7/16	6921
		5¼"	10⅛	7886	9 15/16	9402	10	10187	10¼	10382	10 11/16	10382
18"	2x8	3½"	6½	5082	6⅜	5390	6⅜	5794	6½	6276	6¾	6818
		5¼"	5⅞	—	5½	—	5 3/16	—	5 1/16	—	5	—
	2x10	3½"	8 9/16	6484	8 5/16	6877	8 13/16	6921	9⅛	6921	9 5/16	6921
		5¼"	8	6484	7 11/16	6877	7⅝	7719	7 11/16	9616	7 13/16	10382
	2x12	3½"	10 11/16	6921	10 13/16	6921	11 3/16	6921	11¾	6921	12 7/16	6921
		5¼"	10⅛	7886	9 15/16	8861	10	10382	10¼	10382	10 11/16	10382
23⅞"	2x8	3½"	6½	—	6⅜	—	6⅜	—	6½	—	6¾	—
		5¼"	5⅞	—	5½	—	5 3/16	—	5 1/16	—	5	—
	2x10	3½"	8 9/16	6484	8 5/16	6877	8 13/16	6921	9⅛	6921	9 5/16	6921
		5¼"	8	6484	7 11/16	—	7⅝	—	7 11/16	—	7 13/16	—
	2x12	3½"	10 11/16	6921	10 13/16	6921	11 3/16	6921	11¾	6921	12 7/16	6921
		5¼"	10⅛	7886	9 15/16	8364	10	8991	10¼	10382	10 11/16	10382

NOTES:

1. Prior to using this chart, beam size must be checked by tables or FASTBeam® software.
2. Chart can also be used for 1¾", 5¼" and 7" thick GP Lam® LVL beams
   - For 1¾" thick beam: ½ x allowable reaction (lbs)
   - For 5¼" thick beam: 1½ x allowable reaction (lbs)
   - For 7" thick beam: 2 x allowable reaction (lbs)
3. Provide lateral support at bearing points, and continuous lateral support along top edge of beam.
4. Listed values are for 2.0E GP Lam LVL beam products.
5. Special consideration is required for uplift reactions.
6. Concentrated loads are not allowed in the tapered cut region.
7. Southern Pine bearing plate is assumed. (Allowable bearing stress 565 psi).
8. Values are for Floor use, 100% duration of load increase.
9. If OK is shown in Reaction column, full capacity is available.
10. If no allowable reaction is shown, beam will not work with current input; try using a shallower beam with additional plies.
11. Field verify slope and all dimensions.

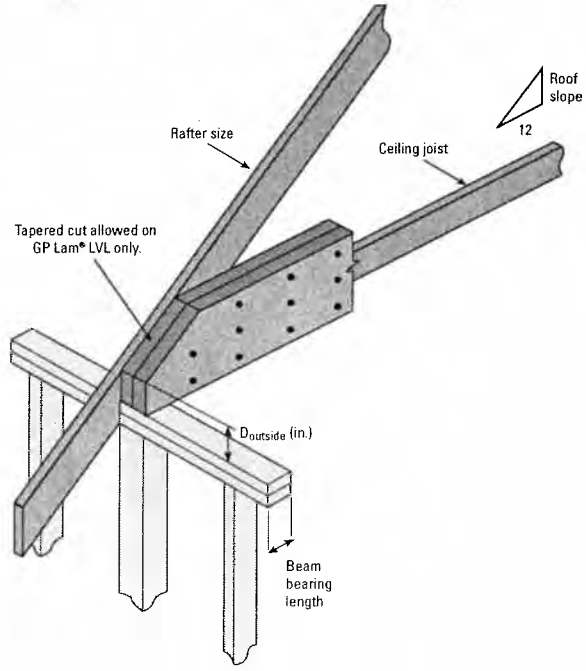

Framing Connectors For GP LAM® LVL Beams

USP Lumber Connectors™		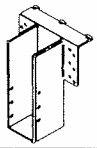			
GP Lam LVL Member Supported					
Thickness	Beam Depth	Top Mount	Capacity 100% (lbs)	Face Mount	Capacity 100% (lbs)
1¾"	7¼"	PHXU17725	4155	HD1770	1905
	9¼"	BPH17925	3395	THD179	5170
	9½"	BPH1795	3395	THD179	5170
	11¼"	BPH17112	3395	THD179	5170
	11⅞"	BPH17118	3395	THD179	5170
	14"	BPH1714	3395	THD179	5170
3½"	7¼"	—	—	—	—
	9¼"	LBH35925	6500	THDH410	7910
	9½"	LBH3595	6500	THDH410	7910
	11¼"	LBH35112	6500	THDH412	9475
	11⅞"	LBH35118	6500	THDH412	9475
	14"	HLBH3514	10620	THDH414	10990
	16"	HLBH3516	10620	THDH414	10990
	18"	HLBH3518	10620	THDH414	10990
	23¾"	HLBH3524	10620	—	—
5¼"	7¼"	—	—	—	—
	9¼"	HLBH52925	10620	THDH610	7840
	9½"	HLBH5295	10620	THDH610	7840
	11¼"	HLBH52112	10620	THDH612	9475
	11⅞"	HLBH52118	10620	THDH612	9475
	14"	HLBH5214	10620	THDH614	11105
	16"	HLBH5216	10620	THDH614	11105
	18"	HLBH5218	10620	THDH614	11105
	23⅞"	—	—	—	—
7"	9¼"	HLBH71925	10620	THDH7210	7840
	9½"	HLBH7195	10620	THDH7210	7840
	11¼"	HLBH71112	10620	THDH7212	9475
	11⅞"	HLBH71118	10620	THDH7212	9475
	14"	HLBH7114	10620	THDH7214	11105
	16"	HLBH7116	10620	THDH7214	11105
	18"	HLBH7118	10620	THDH7214	11105
	23¾"	HLBH7124	10620	—	—

1. Capacity is for the stated duration of load—100% floor loading. Hanger capacity depends on the hanger selected, quantity and size of nails used, and the size and type of support to which it is fastened. **Hanger capacities shown are based on attachment to LVL header material using the hanger manufacturer's recommended nailing. Minimum header thickness is 3½".** Some hanger/header/fastener combinations may not meet maximum beam capacities and a qualified engineer should be consulted. Before selecting hangers, please refer to the appropriate reference/design guide from the hanger manufacturer for expanded design information. Many other designs are available for specialized applications.
2. Hanger model numbers quoted are for United Steel Products Company, Inc. and Simpson Strong-Tie® hangers. Some suppliers carry similar products produced by other manufacturers. Contact your local building material retailer or BlueLinx for conversion information and details.
3. Special consideration is required with top mount hangers on nailers. Refer to the hanger manufacturer's catalog for reduced capacity.

Framing Connectors For GP LAM® LVL Beams

Simpson Strong-Tie® Connectors		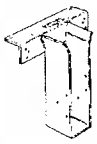		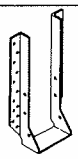	
GP Lam LVL Member Supported					
Thickness	Beam Depth	Top Mount	Capacity 100% (lbs)	Face Mount	Capacity 100% (lbs)
1¾"	7¼"	WP1.81/7.25	3635	HU7	2145
	9¼"	WP9.25	3635	HUS1.81/10	4900
	9½"	WP9	3635	HUS1.81/10	4900
	11¼"	LBV1.81/11.25	3570	HUS1.81/10	4900
	11⅞"	WP11	3635	HUS1.81/10	4900
	14"	WP14	3635	HUS1.81/10	4900
3½"	7¼"	WPU3.56/7.25	4700	HGUS48	6805
	9¼"	HWU3.56/9.25	6335	HGUS410	7890
	9½"	HWU3.56/9.5	6335	HGUS410	7890
	11¼"	HWU3.56/11.25	6335	HGUS412	9205
	11⅞"	HWU3.56/11.88	6335	HGUS412	9205
	14"	HWU3.56/14	6335	HGUS414	9745
	16"	HWU3.56/16	6335	HGUS414	9745
	18"	HWU3.56/18	6335	HGUS414	9745
	23⅞"	HWI424	5100	—	—
5¼"	7¼"	WPU5.50/7.25	4700	—	—
	9¼"	GLTV5.50/9.25	7500	HGUS5.50/10	7890
	9½"	HGLTV5.59	10500	HGUS5.50/10	7890
	11¼"	GLTV5.50/11.25	7500	HGUS5.50/12	9205
	11⅞"	HGLTV5.511	10500	HGUS5.50/12	9205
	14"	HGLTV5.514	10500	HGUS5.50/14	9745
	16"	HGLTV5.516	10500	HGUS5.50/14	9745
	18"	HGLTV5.518	10500	HGUS5.50/14	9745
	23⅞"	—	—	—	—
7"	9¼"	GLTV49.25-2	7500	HGUS7.25/10	7890
	9½"	HGLTV49.5-2	7500	HGUS7.25/10	7890
	11¼"	GLTV411.25-2	7500	HGUS7.25/12	9205
	11⅞"	HGLTV411.88-2	10500	HGUS7.25/12	9205
	14"	HGLTV414-2	10500	HGUS7.25/14	9665
	16"	HGLTV416-2	10500	HGUS7.25/14	9665
	18"	HGLTV418-2	10500	HGUS7.25/14	9665
	23⅞"	HGLTV7.12/24	10500	—	—

See notes on page 52.

GP Lam LVL Beam-To-Column Connectors

Column Cap	Capacity[1] 100% (lbs)	Total Width	Column[2]	W	L	H
KCC44	15315	3½"	4 x __Wood	3⅝"	7"	4"
KCC46	24065	3½"	6 x __Wood	5½"	11"	6½"
KCC48	24065	3½"	8 x __Wood	7½"	11"	6½"
KCC64	37815	5¼"	4 x __Wood	3⅝"	11"	6½"
KCC66	37815	5¼"	6 x __Wood	5½"	11"	6½"
KCC68	37815	5¼"	8 x __Wood	7½"	11"	6½"
KCC84	60940	7"	4 x __Wood	3⅝"	13"	8"
KCC86	60940	7"	6 x __Wood	5½"	13"	8"
KCC88	60940	7"	8 x __Wood	7½"	13"	8"
KLCC35-4	21000	3½"	4" dia. steel	–	11½"	4"
KLCC525-4	21000	5¼"	4" dia. steel	–	11½"	4"
KLCC7-4	21000	7"	4" dia. steel	–	11½"	4"

1. Capacity is maximum capacity of the USP column cap.
2. Adequacy of column to be verified by others.

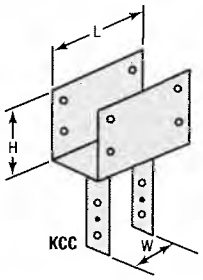

KCC

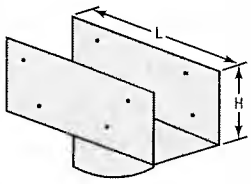

KLCC

GP Lam® LVL Beam and Header Design Properties

1¾" 2.0E GP Lam LVL Allowable Design Properties[a]

Depth[b]	EI (10^6 inch² lbs)	Maximum Resistive Moment (ft-lbs)			Maximum Vertical Shear (lbs)			Weight (lbs/ft)
		100%	115%	125%	100%	115%	125%	
7¼"	111	3918	4506	4898	2411	2773	3014	3.4
9¼"	231	6208	7139	7760	3076	3537	3845	4.3
9½"	250	6529	7508	8161	3159	3633	3949	4.4
11¼"	415	8985	10333	11231	3741	4302	4676	5.2
11⅞"	488	9951	11444	12439	3948	4540	4935	5.5
14"	800	13581	15618	16976	4655	5353	5819	6.5
16"	1195	17477	20099	21846	5320	6118	6650	7.4
18"	1701	21831	25106	27289	5985	6883	7481	8.4
23⅞"	3969	37222	42805	46528	7938	9129	9923	11.1

a. Table assumes beam has lateral support at bearing points and continuous lateral support along the compression edge of the beam.
b. 1¾" x 16" and deeper beams must only be used in multiple-piece members.

2.0E GP Lam LVL Allowable Design Stresses

Modulus of Elasticity	E	=	2.0×10^6 psi[1]
Shear Modulus of Elasticity	G	=	125,000 psi
Flexural Stress (joist)	F_b	=	2900 psi[2]
Horizontal Shear (joist)	F_v	=	285 psi
Compression Perpendicular to Grain (joist)	$F_{c\perp}$	=	750 psi[1]
Compression Parallel to Grain	$F_{c\parallel}$	=	2750 psi

1. No increase is allowed to E or $F_{c\perp}$ for duration of load.
2. For depths (d) other than 12", multiply F_b by $(12/d)^{1/9}$.

Allowable Holes in GP Lam LVL

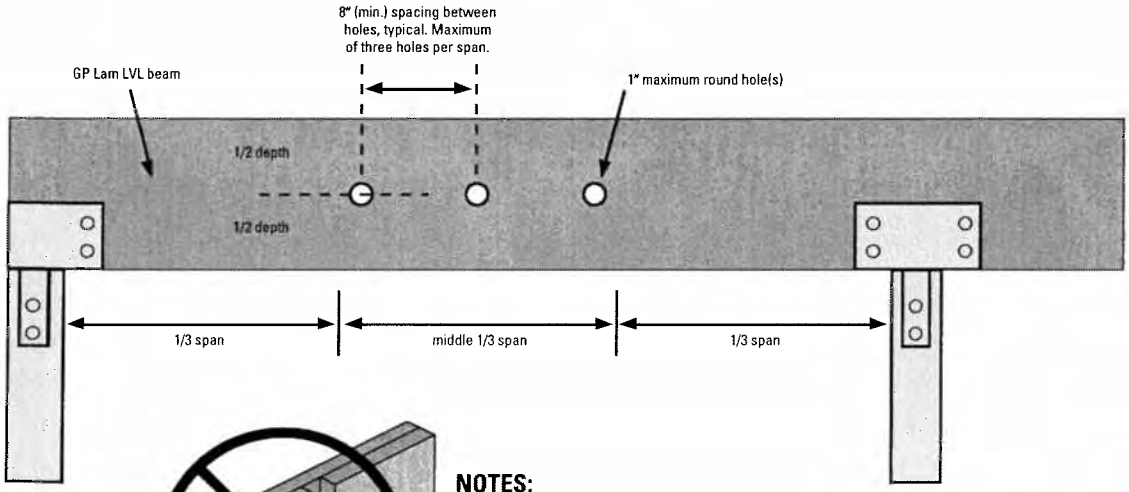

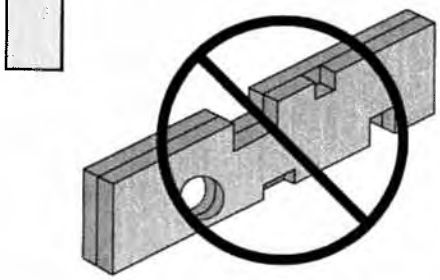

Do not notch, drill or cut GP Lam LVL except as shown in this publication.

NOTES:

1. Hole(s) must be located at mid-depth and within the middle 1/3 span.
2. 1" maximum round hole diameter. No rectangular holes are allowed.
3. Use a minimum 8" spacing between holes and no more than three holes per span.
4. Chart is valid for single and multiple span uniformly loaded beams only. Chart is not valid for cantilever sections.
5. Minimum beam depth 7¼".
6. Hole location, clearance and the effects of beam deflection should be considered to avoid problems with piping.

GP Lam® LVL Architectural Specifications

Part 1—General

1.0—Description

A. Work in this section includes, but is not limited to: Laminated Veneer Lumber (LVL) beams and headers.
B. Related work specified elsewhere: Rough carpentry.

1.1—Submittals:

A. Product data: Submit manufacturer's descriptive literature indicating material composition, thicknesses, dimensions, loading and fabrication details.
B. Shop drawings: Submit manufacturer's literature indicating installation details. Include locations and details of bearing, blocking, bridging and cutting for work by others.

1.2—Quality assurance:

A. Certification: Certify that materials meet specified requirements.
B. Regulatory requirements: GP Lam LVL is listed with major building codes. Contact BlueLinx for most current code compliance.

1.3—Delivery, Storage and Handling:

A. Delivery: Deliver materials to the job site in manufacturer's original packaging, containers and bundles with manufacturer's identification intact and legible.
B. Storage and handling: Store and handle materials to protect against contact with damp and wet surfaces, exposure to weather, breakage and damage. Provide air circulation under covering and around stacks of materials.

1.4—Limitations:

A. Cutting: Except for cutting to length, GP Lam LVL beams & headers shall not be cut, drilled or notched, except as noted in manufacturer's literature.
B. Moisture conditions: GP Lam LVL is for use in covered, dry conditions only.

Part 2.0—Products

2.1—Prefabricated wood beams and headers:

A. Acceptable products:
1. Georgia-Pacific Corporation, GP Lam LVL floor and roof beams.
2. Georgia-Pacific Corporation, GP Lam LVL window and door headers.

B. Characteristics:
1. Construction: 1¾″ thick pressure bonded, lap-jointed wood veneers, with grain of veneers running parallel in the long direction.
2. Beam depths: 7¼″, 9¼″, 9½″, 11¼″, 11⅞″, 14″, 16″, 18″ and 23⅞″ as required for loading, deflection and span.
3. Beam length: As required for span and bearing.

2.2—Accessories:

A. Fasteners: 16d common nails, approved screws or ½″ bolts.
B. Hangers:
1. Contact BlueLinx or an engineer for acceptable connectors.

Part 3—Execution

3.0—General:

A. Provide GP Lam LVL beams and headers where indicated on drawings using hangers and accessories specified.
B. Install GP Lam LVL beams and headers in accordance with manufacturer's recommendations.

3.2—Accessories:

Install accessories where indicated and in accordance with beam and header manufacturer's instructions.

NOTE:

GP engineered lumber products may support mold growth if exposed to certain conditions, including moisture, dampness, condensation, humidity, water or wet conditions. Mold, mildew, fungi, algae, moss, bacterial growth, decay, rot or similar conditions are not manufacturing or product defects and Georgia-Pacific and BlueLinx assume no responsibility or liability for such conditions, regardless of cause.

The user is responsible for proper installation of GP engineered lumber products. The products must be installed in strict conformity with Georgia-Pacific's instructions and all applicable building code requirements and other regulations. In addition, if not specifically covered by Georgia-Pacific's installation instructions or construction detail illustrations, the products must be installed in accordance with generally accepted design and construction practices. When installing engineered lumber products, the user should also consider the effects of local climate and geography. Georgia-Pacific and BlueLinx do not warrant and are not responsible for any finished structure or system that GP engineered lumber products may be incorporated into or other building components that may be used with these products.

Engineered for performance

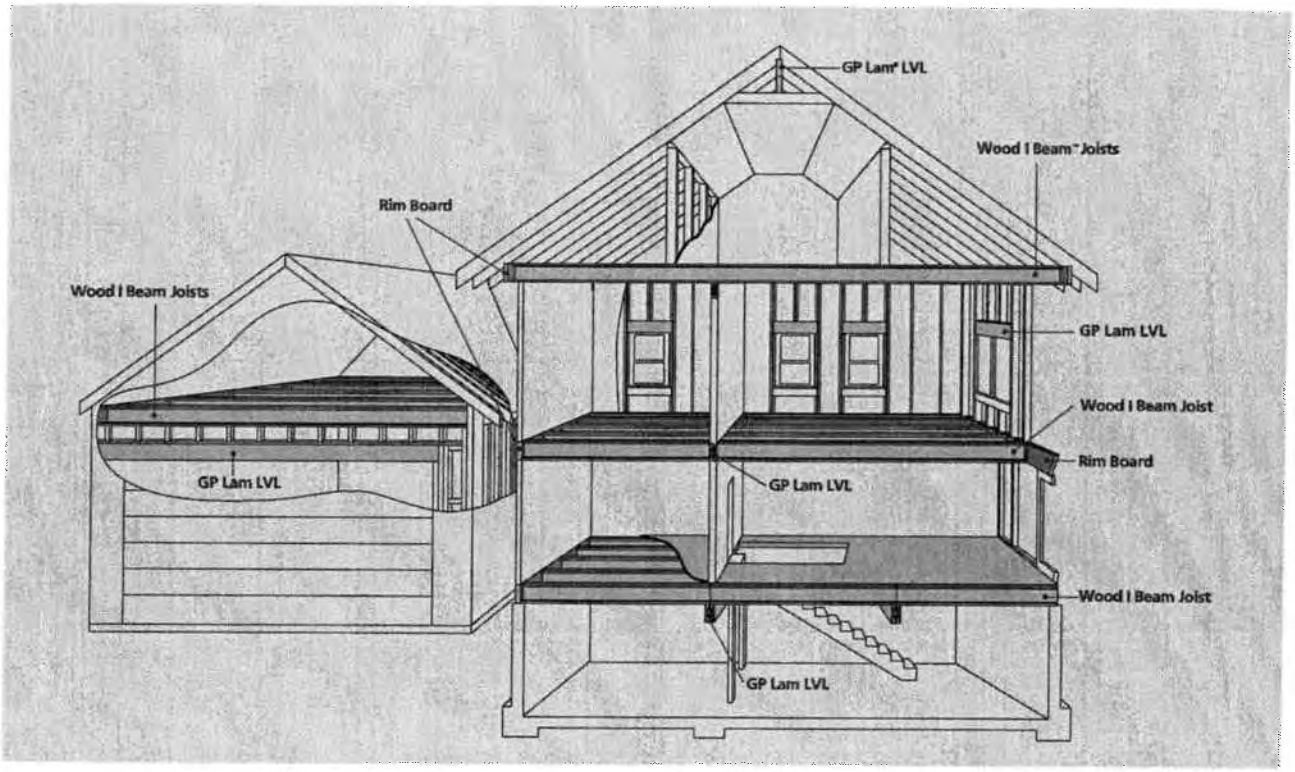

When it comes to floor joists, rimboard, beams and headers, builders and contractors choose GP engineered lumber for many reasons. Today's residential building trends call for large, open spaces and high ceilings, creating a demand for products that provide higher strength and greater stability over longer spans.

Georgia-Pacific engineered lumber provides the following benefits:

- More open spaces
- Quieter floors with less vibration
- A flat, level, more stable floor system
- Environmentally responsible
- Lifetime limited warranty*

For more information, call 1-888-502-BLUE or visit www.bluelinxco.com.

ENGINEERED LUMBER®

WOOD I BEAM®

GP LAM®
with FiberGuard™

FiberStrong®
Rim Board

Distributed Exclusively by

BlueLinx

BlueLinx Corporation
4300 Wildwood Parkway
Atlanta, GA 30339
1-888-502-BLUE *www.bluelinxco.com*

* See manufacturer's warranty for terms, conditions and limitations. To receive a copy of the manufacturer's warranty call 1-888-502-BLUE.

Georgia-Pacific Corporation, April 2005

H Hybrid Connectors: Seismic & Hurricane Ties for Woo st to CFS Wall (Cold Formed Steel)

Designed to provide seismic and wind ties for wood trusses or joists to CFS walls, t versatile line may be used for general purposes, strongback attachments, and as all-purpose ties where one member crosses another.

HS24 attaches the bottom chord of a truss or rafter at pitches from 0:12 to 4:12 to steel top plates.

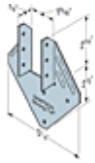

Load Table
Gallery of images
Gallery, installed
Code Reports
Drawings
Related Catalogs
Related Categories
Help for downloads

Material: See Table.

Finish: Galvanized. Selected products available in stainless steel or ZMAX. See Corrosion Information.

Installation:

- Use all specified fasteners. See General Notes
- H1 can be installed with flanges facing inward (reverse of illustration 1).
- Hurricane Ties do not replace solid blocking.
- H2.5, H3, and H6 ties are only shipped in equal quantities of rights and lefts.

Gallery:

top

roll over images below to see larger image

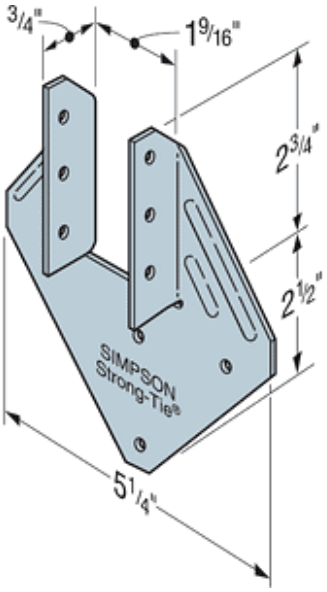

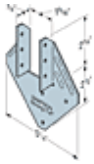

H1

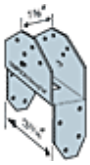

HS24
U.S. Patent
5,603,580

H2

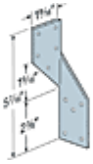

H2.5

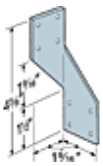

H3

H6

H7Z

Gallery, Installed:

top

roll over images below to see larger image

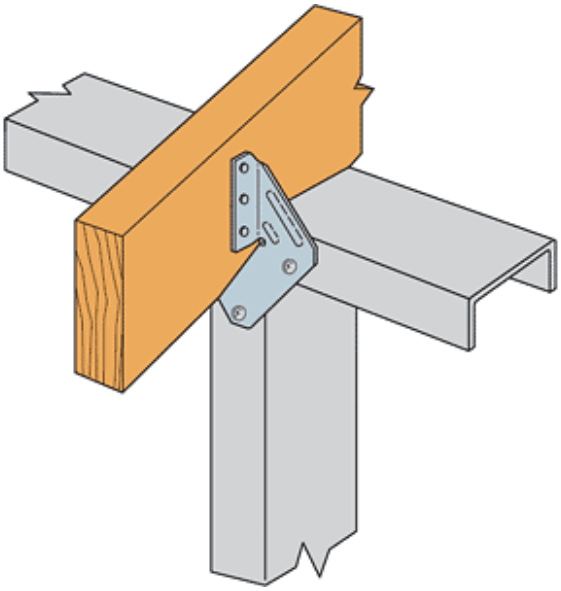

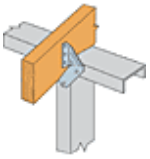

1.
H1 Installation

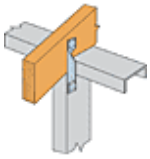

2.
H2 Installation

3.
H2.5 Installation

4.
H3 Installation

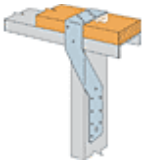

5.
H6 Stud to Top Plate Installation

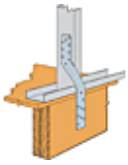

6.
H6 Stud to Band Joist Installation

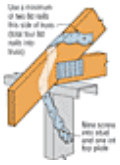

7.
H7Z Installation

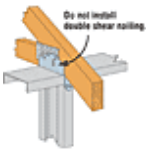

8.
HS24 Installation

Load Table:

top

Available with additional corrosion protection. Check with factory.

Model No.	Thickness mil (ga)	Fasteners: To Rafters / Truss	Fasteners: To Plates	Fasteners: To Studs	Allowable Uplift Loads DF/SP (133)	Allowable Uplift Loads DF/SP (160)	Allowable Uplift Loads SPF/HF (133)	Allowable Uplift Loads SPF/HF (160)	Code Ref.
H1	43 mil (18)	6- 8dx1½"	4- #10	1- #10	490	585	400	400	170
H2	43 mil (18)	5- 8d	–	5- #10	335	335	230	230	
H2.5	43 mil (18)	5- 8d	3- #10	2- #10	415	415	365	365	
H3	43 mil (18)	4- 8d	4- #10	–	400	400	280	280	
H6	54 mil (16)	–	8- 8d	8- #10	915	950	785	820	
H7Z	54 mil (16)	4- 8dx1½"	2- #10	8- #10	930	985	800	845	
HS24	43 mil (18)	8- 8dx1½"	4- #10	4- #10	625	625	520	520	

1. Tabulated loads under the 133 and 160 columns have been increased by the wood load duration factor, CD, for seismic and wind loading and may not be increased. They must be reduced when other loads govern. Tabulated loads do not include the 1/3 stress increase.
2. Loads are based on attachment of cold-formed steel members having a minimum thickness of 33 mil (20 ga).
3. Hurricane Ties are shown installed on the outside of wall for clarity .Installation inside of wall is acceptable. For Continuous Load Path, connections must be on same side of wall.
4. When cross-grain bending or cross grain tension cannot be avoided mechanical reinforcement to resist such force should be considered.

Code Reports (PDFs): See table above, if available, for specific product code references

▲top

Code Ref. 170: No code listing

Please contact us for test data.

Florida Statewide Product Approvals

Code Ref. 121: FL474

View the products covered in FL474

Code Ref. 122: FL503

View the products covered in FL503

Code Ref. 146: FL6482

View the products covered in FL6482

Drawings: To download drawings, right-click or Ctrl-click on the link, then choose "Save Target As..."

▲top

DWG

Download the Simpson AutoCad Menu

Perspective

AC4 and H1 Truss/Rafter to CMU View 2 H1 H1 CFS
Top Plate to Stud Connectors H2 H2 CFS Stud to Band Joist Connections
Sill Plate to Foundation Connections Truss/Rafter to Wood Top Plate 1
Truss/Rafter to Wood Top Plate 2 H2.5 H2_5 CFS Top Plate to Stud Connectors
Truss/Rafter to CMU View 1 H3 H6 H6 HS24

Orthographic

H1 H1 front view H1 left view H1 right view H1 top view H2 H2 front view
H2 left view H2 right view H2 top view H2.5 H2.5 front view H2.5 left view
H2.5 right view H2.5 top view H3 H3 front view H3 left view H3 right view H3 top view
H6 H6 front view H6 left view H6 right view H6 top view

DXF

Perspective

AC4 and H1 Truss/Rafter to CMU View 2 H1 H1 CFS Top Plate to Stud Connectors H2
H2 CFS Stud to Band Joist Connections Sill Plate to Foundation Connections
Truss/Rafter to Wood Top Plate 1 Truss/Rafter to Wood Top Plate 2 H2.5 H2_5 CFS
Top Plate to Stud Connectors Truss/Rafter to CMU View 1 H3 H6 H6 HS24

Orthographic

H1 H1 front view H1 left view H1 right view H1 top view H2 H2 front view
H2 right view H2 top view H2.5 H2.5 front view H2.5 right view H3 H3 front view
H3 right view H3 top view H6 H6 front view H6 right view H6 top view

Related Catalog Pages (PDFs):

▲top

C-CFS06 (Cold Formed Steel Connectors) (161k)

To order free catalogs by mail visit the Literature Order Form

Related Categories:

▲top

High Wind Resistance: Truss/Rafter to Wood Double Top Plates
Architectural Products Group
High Wind Resistance: Stud to Sill Plate
High Wind Resistance: Top Plates to Stud
High Wind Resistance: Truss/Rafter to Single Top Plate
High Wind Resistance: Truss/Rafter to Stud
High Wind Resistance: Stud to Band Joist
Angles, Clips, & Straps for Home Products (DIY)

Technical Bulletins (PDFs):

▲top

T-DECKB ENGLISH (175k)
Deck-Tie

T-DECKB (193k)
Deck-Tie (in French/en Français)

T-AIRNAIL06 (81k)

EZ CODE™ Nail Applications with Air Nail Fasteners (Replaces T-AIRNAIL05, T-AIRNAIL02)

T-BOSTITCH06 (227k)

Applications with Bostitch Metal Connector Fasteners (Replaces T-BOSTITCH05-R, T-BOSTITCH05)

T-STRAPTITE06 (78k)

Hitachi Strap Tite Nail Applications with Hitachi Fasteners (Replaces T-STRAPTITE05)

T-HTIEBEARING05 (92k)

Hurricane Ties Used for Truss Bearing Enhancement

T-UPLIFT05 (266k)

Uplift Connectors - Truss to Wall Tiedowns (Replaces T-UPLIFT03)

T-WIND05 (340k)

Built No-Equal Construction for 90, 100, and 110 mph Wind Speeds (Replaces T-WCHWIND02)

T-HWFCG06 (5.4mb)

High Wind Framing Connection Guide

Fliers (PDFs):

▲top

DIY-DTSRSP03 (916k)

Un Sistema Completo de Conectores para Construcción de Terrazas (en Español)

F-UPLIFTCON06 (745k)

Uplift Connectors (Replaces F-UPLIFTCON04)

F-SS06 (323k)

Stainless Steel Connectors (Replaces F-SS05)

F-WIND06 (559k)

The Effects of Wind (Replaces F-WIND05)

DIY-DECKPATIO05 (383k)

Deck Connector System/Patio Cover System

F-H2.5T05 (77k)

H2.5T Hurricane Tie

Need help with downloads?

▲top

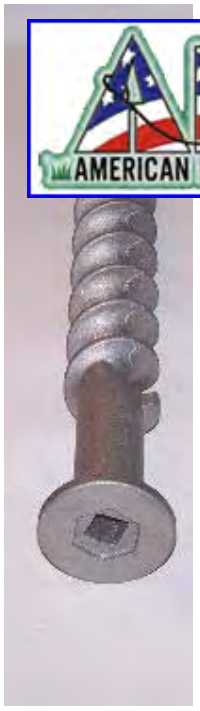

PE18-SQ

Product ID: PE18-SQ
Our Price $18.81
Read Reviews Write A Review
Add to Wishlist

PE18-SQ Quantity ADD TO CART

18" Penetrator with 1/2" SQ Drive Head Screw Anchor

2" Flat Head With 1/2" Drive - 1 3/4" Diameter Flights - Shaft 1" Diameter - 18" Long Under Washer

Material - 356 Aluminum - Heat Treated To T6 Specs - Weight 1.5 LB

Request A Quote

Product Reviews

Write A Review
Be the first to add your comment.

- top
- 18 inch Penetrator With half inch Square Drive Head

Use our high-quality, innovative anchoring products for a wide variety of applications:
tents, sheds, trees, airplanes, radar systems and towers – to name just a few.

Designed for the military, as well as commercial, government and residential uses.

Order Online
or
Call Toll Free
in USA
866-520-8511

Outside the US,
please call
1-508-520-8511

Australia & New Zealand
Order from our new, exclusive distributor
SOLARONLINE

Click image for more views.

PE-LB90

Product ID: PE-LB90
Our Price $8.66
Read Reviews Write A Review
Add to Wishlist

PE-LB90 Quantity ADD TO CART

90° 4x4 post "L" bracket for PE18 Penetrator Screw Anchor.

Request A Quote

Product Reviews

Write A Review
Be the first to add your comment.

- top

- Penetrator Accessories
- 18 inch Penetrator with 1 inch Hex Head
- 18 inch Penetrator With half inch Square Drive Head

Use our high-quality, innovative anchoring products for a wide variety of applications:
tents, sheds, trees, airplanes, radar systems and towers – to name just a few.

Designed for the military, as well as commercial, government and residential uses.

Order Online
or
Call Toll Free
in USA
866-520-8511

Outside the US,
please call
1-508-520-8511

Australia & New Zealand
Order from our new,
exclusive distributor
SOLARONLINE

Monday February 19, 2007

Complete Site Directory

AdvanTech® Flooring and Sheathing Specifications

General Information
● AdvanTech flooring and sheathing panels are available in Tand G and square edge. On T and G panels, net face width = 47-1/2"
● Fire Rating for AdvanTech panels is Class C (III)
● Custom sizes available on request
● Custom sanding available on request
● All special requests will be handled on an individual basis.

Panel Sizes by Mill			
Mill Location	**Panel Size**		
Broken Bow, OK	T and G: Square Edge:	4' x 8' to 4' x 16' 4' x 8' to 8' x 24'	
Easton, ME	T and G: Square Edge:	4' x 8' to 4' x 16' 4' x 8' to 8' x 16'	
Commerce, GA	T and G: Square Edge:	4' x 8' to 4' x 16' 4' x 8' to 8' x 24'	
Crystal Hill, VA	T and G: Square Edge:	4' x 8' to 4' x 16' 4' x 8' to 8' x 24'	
Spring City, TN	T and G: Square Edge:	4' x 8' to 4' x 16' 4' x 8' to 8' x 28'	

AdvanTech Flooring Panels Thickness, Span Rating, Panel Weight, Panel Units by Mill Location				
Mill Location	**Panel Thickness**	**Span Rating**	**Approx Wt./Panel**	**Panels per Unit**
Easton, ME	19/32" 23/32" 7/8"	20 o.c. 24 o.c. 32 o.c.	65 lbs 75 lbs 91 lbs	55 45 40
Broken Bow, OK	19/32" 23/32" 7/8" 1" 1-1/8"	20 o.c. 24 o.c. 32 o.c. 32 o.c. 48 o.c.	66 lbs 78 lbs 100 lbs 108 lbs 126 lbs	55 45 40 35 30
Commerce, GA **Crystal Hill, VA** **Spring City, TN**	19/32" 23/32" 7/8" 1" 1-1/8"	20 o.c. 24 o.c. 32 o.c. 32 o.c. 48 o.c.	68 lbs 78 lbs 94 lbs 110 lbs 124 lbs	55 45 40 35 30

AdvanTech Sheathing Panels
Thickness, Span Rating, Panel Weight, Panel Units

by Mill Location				
Mill Location	**Panel Thickness**	**Span Rating**	**Approx Wt./Panel**	**Panels per Unit**
Easton, ME	1/2" 5/8"	32/16 40/20	52 lbs 67 lbs	70 55
Broken Bow, OK	1/2" 5/8"	32/16 32/16.	57 lbs 67 lbs	70 55
Commerce, GA **Crystal Hill, VA** **Spring City, TN**	1/2" 5/8"	32/16 40/20	57 lbs 68 lbs	70 55

Specification Guidelines

Next >

These guidelines are intended to assist in specifying the most economical and efficient use of Southern Pine lumber products. They should also help minimize misunderstandings between specifier and supplier. Product availability and economy varies by market area. Becoming familiar with the products available in your area will allow you to more easily obtain materials to satisfy your demands.

Identification and Quality Control - Each piece of lumber should be grademarked by an agency accredited by the American Lumber Standard Committee (ALSC), and manufactured in accordance with *Product Standard PS 20* published by the U.S. Department of Commerce. View typical Southern Pine grade marks by clicking here.

Product Classification - Products should be identified by manufactured categories such as Dimension, Structural Light Framing, Decking, Boards, Timbers, etc. Products in categories such as Finish, Flooring, Ceiling, and Siding, etc., should include the pattern name and number assigned by the ruleswriting agency. This will correctly identify the product and ensure that it conforms to standard. Select from the grade descriptions here.

Size and Length of Pieces - Products included in lumber standards, such as Dimension Lumber, should be specified by nominal sizes for thickness and width, and by common lengths which are 8' to 20' in two-foot increments. Products with patterns and special orders should include the desired net, dry size, plus the dimensioned profile pattern for less common items. View standard sizes by clicking here.

Grade and Strength of Material - Standard grades for each product class should be specified after considering all grades appropriate for the intended use and strength requirements. For structural applications, include the required design values along with the grade that represents those design values.

Moisture Content - Specify desired moisture content (percent) based on requirements for the product, grade and intended use. Most product classes and grades of Southern Pine have specific moisture requirements. View moisture content limits by clicking here.

Surface Texture - Surfacing requirements should be specified. Lumber is commonly ordered S4S (smooth surfaced on all four sides), or rough sawn. Other examples include: S1S2E (surfaced one side and two edges); or S2S&CM (surfaced two sides and center matched on edges with centered tongue and groove). Variances from S4S will cause a change from the standard dressed sizes, so the effect on desired net dry size should be considered. Refer to the *SPIB Standard Grading Rules for Southern Pine Lumber* for more information on surfacing designations and net product sizes.

Transportation and Storage - All lumber in transit, storage and handling areas should be protected from moisture, weather and contaminants. Coatings, wrappings or coverings should allow circulation and not trap moisture. View proper storage guidelines by clicking here.

Preservative Treatment - When pressure-treated lumber is required, it should be treated according to appropriate American Wood-Preservers' Association (AWPA) Standards. Quality control for treating should be done by an approved inspection agency. Each piece of lumber should be identified with a quality mark or end tag bearing the name of the inspection agency, applicable AWPA Standard, use exposure, preservative used, retention level, treating company and year of treatment. Jobsite fabrication cuts and borings should be field treated with copper naphthenate having a minimum 2% metallic solution in accordance with *AWPA Standard*

M4. Products preservatives, uses and standards are described at Pressure-Treated Southern Pine.

Next >

AS 1649 METHODS OF THE DETERMINATION OF BASIC WORKING LOADS FOR METAL FASTENERS FOR TIMBER

Describes methods of the derivation of basic working loads (resistance to withdrawal and lateral deformation at joints) of a variety of types of fastener, including nails, staples and screws, toothed and plain ring connectors; pre-drilled and toothed metal gusset and splice plates; and pre-drilled brackets. It covers sampling of fasteners and timber, and test procedures under standard and non-standard test conditions. Methods for determining density of timber and for computing the mean standard deviation of individual results and 1 per cent lower probability limit are given in appendices.

Miscellaneous

AS 1728 TYPES OF TIMBER SURFACES

Provides for specification of finish of surface by type-numbering sawn surfaces 1 to 5 for finishes ranging from "coarse" to "smooth"; dressed surfaces 1 to 5 for finishes from "dimensional dressing" to "very smooth"; abraded surfaces 1 to 3 for finishes from "medium" to "very smooth". The grading requirements for each type of surface are given and are summarised in an appendix. A surface gauge is specified for measuring texture of sawn and dressed surfaces and the standard also specifies a comparison sample for assessing abraded surfaces. Some suggested applications of the various types of surfaces are tabulated in a commentary that also gives "perceptibility graphs" for the various types of surfaces when coated with finishes with differing degrees of gloss.

International Standards

For applications within Australia, these standards are not generally applicable. Standards Australia have a policy to adopt the International (ISO) Standards where this is feasible. However, timber imports into Australia are sourced predominately from countries where the ISO Standards are not generally applied.

For structural applications, timber must comply with Australian Standards to be used in accordance with Australian codes of practice. Most imports, particularly those from North America are now graded in accordance with Australian Standards.

A list of ISO Standards is available from Standards Australia.

Industry Standards

In addition to the Timber Industrys many "Industry Standards" covering product manufacturing or processing, there are a number of Industry Standards covering product specifications which are not included in Australian Standards.

Many of these Industry Standards have been adopted as an interim measure while formal Australian Standards are being developed.

The following is a list of current Industry Standards (1989) appropriate to design and specification.

Radiata Pine Research Institute Inc.

RPRI INDUSTRY STANDARD 102-1982 GUIDE SPECIFICATION FOR THE MANUFACTURE, ON-SITE HANDLING, ERECTION, SURFACE COATING AND MAINTENANCE OF STRUCTURAL GLUE LAMINATED RADIATA PINE COMPONENTS.

This specification provides requirements for structural glued laminated radiata pine components covering all stages from manufacture to maintenance. Manufacturing requirements for these components, specified in AS 1328, GLUED LAMINATED STRUCTURAL TIMBER include interior and exterior service grades and their appearance grades. It contains both recommended specification clauses and advisory notes.

RPRI INDUSTRY STANDARD 103-1982 SPECIFICATION FOR MACHINE PROOF GRADED RADIATA PINE

This industry specification sets out requirements for moisture content and seasoning, minimum dimensions, stress grades, visual inspection and grade marking of seasoned proof graded radiata pine.

RPRI INDUSTRY STANDARD 104-1982 CODE OF PRACTICE FOR THE MACHINE PROOF GRADING OF RADIATA PINE

This industry code of practice specifies requirements for applicable proof grading machines, procedures for calibration and verification of machines, establishment of load factors, operational procedures, machine control and quality assurance testing of proof graded radiata pine.

Timber Preservers Association of Australia.

TPAA STANDARD 1579 LIGHT ORGANIC SOLVENT PRESERVATIVE TREATMENT OF TIMBER BY VACUUM/PRESSURE METHODS

This specification applies to Light Organic Solvent Preservative (LOSP) treated timber. It does not apply to timber used in ground contact such as fence posts or transmission poles, nor cooling towers, marine structures and other high decay hazard situations. Neither does it cover the use of LOSP for lyctus immunisation.

TPAA STANDARD 1784 PRESERVATIVE TREATED HARDWOOD AND SOFTWOOD FOUNDATION PILING

This specification establishes the minimum standard for preservative treated natural round hardwood foundation piles, which are to be cut off and capped at least half a metre below ground level. It provides length and diameter information and recommends pre-capping practice for such piles.

Australian Wood Panels Association.

APRI INDUSTRY STANDARD FOR HIGH MOISTURE RESISTENT (HMR) PARTICLEBOARD

This standard applies to wood particleboard produced to comply to the general requirements of AS 1859, FLAT PRESSED PARTICLEBOARD, but is specially made for applications where high moisture resistance is required. It also specifies the limits for physical and mechanical properties for HMR Particleboard.

Forest Products Association (WA)

TAS-G4 (1985) APPEARANCE GRADED WESTERN AUSTRALIAN HARDWOOD FOR FURNITURE USE

This specification applies to Western Australian Hardwoods for direct use or re-processing into exposed furniture components.

Timber Promotion Council (VIC).

INDUSTRY SPECIFICATION (MAY 1983) MANUFACTURING REQUIREMENTS AND QUALITY CONTROL PROCEDURES FOR FINGER-JOINTED HARDWOOD WALL FRAMING MATERIAL

This specification applies to finger-jointed wall framing studs, plates and noggings manufactured from Victorian Hardwood species.

Timber Research and Development Advisory Council of Queensland.

INTERIM CODE OF PRACTICE FOR PROOF GRADED TIMBER

This specification provides recommendations for the proof grading of structural timber. It is used in conjunction with the Queensland based quality assurance programmes for cypress and pine.

INTERIM SPECIFICATION — GRADING RULES FOR CYPRESS MILLED PRODUCTS

This specification covers flooring, light decking, lining, dressed boards, joinery stock, mouldings, cladding and fascia boards. Two grades for each product are specified. Standard profiles are not given but machining tolerances are scheduled for flooring and lining.

Plywood Association of Australia.

INDUSTRY STANDARD, LAMINATED VENEER LUMBER

This specification is a performance standard based on a manufacturing specification. Veneer quality and bonding complies to the requirements of AS 2269, STRUCTURAL PLYWOOD.

Industry Framing Manuals.

In addition to the foregoing product specifications, there is a range of Timber Framing Manuals produced by various State organisations. Generally, these conform with AS 1684, SAA TIMBER FRAMING CODE but have additional design information including tie-down and bracing for higher wind speeds where appropriate.

Industry design and construction manuals provide guidance on building practice and timber sizes

State Legislation

In New South Wales and Queensland there is legislation which governs the sale and use of timber and timber products. The two Acts are:

- Timber Marketing Act (New South Wales)
- Timber Utilisation and Marketing Act (Queensland)

The two Acts establish controls in three basic areas:

- Seasoned Timber

  When timbers are sold as seasoned they are required to have a moisture content either within the range of 10 to 15 per cent or within a range agreed on between buyer and seller. For some specialised timber products the timber must be seasoned or comply with a specific Australian Standard.

- Lyctid Susceptible Timber

  The sapwood of certain timbers is susceptible to attack by lyctid borers. Lyctid susceptible timber cannot be sold or used in manufacture or building unless it has been immunised to standards specified by the legislation. In New South Wales, however, framing timber may contain lyctid susceptible sapwood within defined limits.

- Preservative Treated Timber

  Many timbers are preservative treated to make them more suitable for various applications where sapwood is present or natural durability is inadequate. Timber sold as preservative treated must have received a preservative treatment approved under the Act. Preservative Treated Timber must also be branded to identify the producer, preservative used and the conditions for which the timber is suitable.

These summaries give only a brief description of those areas covered by the Acts and detailed information should, if required, be sought from Timber Advisory Services or reference made to the Acts themselves.

In New South Wales, the Timber Marketing Act also requires that if timber is branded, identifying a grade or stress grade, it must comply with an Australian Standard.

In Victoria, the building regulations require, with some exceptions, that structural timber be graded to appropriate Australian Standards and branded with information including source of grading identification as recorded in the Timber Promotion Councils register. Details are available from the Timber Promotion Council, Victoria.

Quality Assurance

Quality assurance is an assurance given by manufacturers that a product consistently meets a specified standard or quality. It does not imply necessarily that the product is of the best quality available but it provides an assurance that the product is "fit for an intended purpose". It is the purchasers or specifiers responsibility to ensure that the product specification satisfies the desired performance criteria.

Quality assurance can be confidently provided by manufacturers who have in place, quality control programmes for which third party audit programmes are in operation.

Throughout Australia, there are a number of third party audited quality assurance programmes in operation. Under the conditions of By-laws of these programmes, participating manufacturers have the right to use certification grade marks in brands used on their quality controlled products.

Members of quality assurance programmes must continue to produce products of specified quality or their rights to use the certification grade marks will be withdrawn. Regular audits are carried out to ensure this compliance.

Table 1 schedules quality assurance programmes currently (1989) operating within the timber and timber products industry in Australia.

Quality assurance auditors visit building sites to check customer acceptance

TABLE 1 QUALITY ASSURANCE PROGRAMMES

Authority	Species/Product	Location	Certification Mark
Australian Hardwood Quality Council	Hardwood	Qld NSW Vic Tas	AHQC
Forest Products Association (WA)	Hardwood	All States	FPA
Radiata Pine Association of Australia	Radiata Pine	NSW Vic SA WA	QC
Queensland Timber Board	Cypress	Qld	Cypress
Queensland Timber Board	Pine (Softwoods)	Qld	
Plywood Association of Australia Ltd	Plywood	All States	Refer Figure 7

Although all timber species programmes cover structural timber, recent agreement has been reached that will incorporate milled products such as flooring, panelling, etc into these programmes in the near future. The radiata pine programme currently covers all products including glued laminated timber and preservative treated timber.

Products manufactured within the recognised quality assurance programmes provide the following benefits:

- assured quality
- consistent to grade
- known and reliable strength grade
- an identifiable source

Members of quality assurance programmes use certification grade marks to signify that their products are manufactured within one of the programmes which require compliance with Australian Standards or recognised Industry Standards. The certification mark indicates that the manufacturer assures the quality of the product.

Certification marks together with other product and manufacturer identification are applied using stamps or labels at least once on each piece.

The following is a brief description of programmes operating in Australia:

Australian Hardwood Quality Council

The Australian Hardwood Quality Council was established in 1981. It is a national organisation with agencies in Victoria, New South Wales, Queensland and Tasmania.

The primary objective of AHQC is to enforce quality standards for Australian hardwoods and to set up a quality assurance programme to ensure that all members are meeting the required quality standards.

Only producers and processors of Australian hardwoods who become members of AHQC and who consistently manufacture and grade to its requirements are allowed to use the brand mark.

A recognised timber organisation acts as the Councils agent in each participating state.

Victoria — Timber Promotion Council

New South Wales — Forest Products Association (NSW)

Queensland — Queensland Timber Board

Tasmania — Tasmanian Timber Promotion Board

AHQC hardwood selected for Expo '88 boardwalk

The AHQC Certification Brand is illustrated in Figure 1.

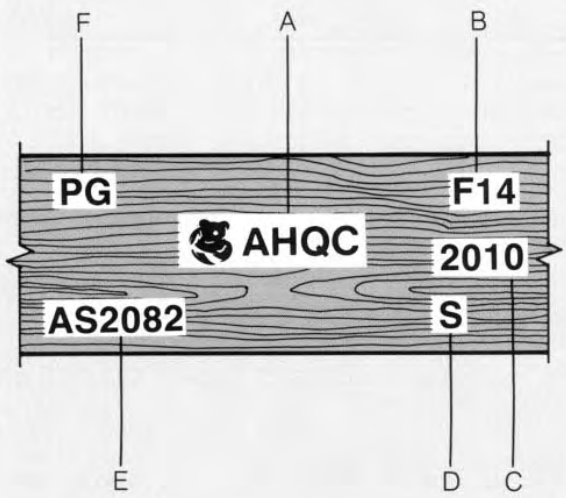

A. The AHQC certification mark consisting of the Koala symbol and the letters AHQC.

B. The stress grade identification e.g. F14.

C. The authorised mill or grading location number, or approved company identification.

D. The letter "S" or the word "seasoned" if the timber to which the mark is to be applied has been produced and graded as seasoned material.

E. The number of the relevant Australian Standard (optional).

F. "PG", "PROOF", or "PROOF GRADE" when the product is proof graded.

FIGURE 1 AHQC BRAND DETAILS

Radiata Pine Association of Australia

The Radiata Pine Association of Australia Inc instituted the RPAA Quality Control Scheme in 1976.

The RPAA has as its Quality Policy the responsibility of ensuring consistent quality of RPAA grade marked products.

Members of the Quality Control Division are required to adopt sound quality control practices to ensure that finished products meet standards of performance, reliability and quality.

Used in different combinations the following elements constitute the RPAA certification brand.

RPAA	Attests that the Association is the authority responsible for the policies and operation of the Quality Control Division.
QC	Denotes the product has been manufactured by a subscriber member of the Division, in accordance with the rules and regulations governing grading procedures and grade marking.
33 or 33	Number of authorised mill accepting accountability for product quality.
F5	The visual or mechanical stress grade assigned to structural material.
SEASONED	Indicates that the product is seasoned i.e. 10-15% moisture content.
AS 1492	SAA Standard to which timber has been graded. Where not given, the product has been produced to an RPAA Industry Specification.
RPRI	Radiata Pine Research Institute Industry Standard.
MSG	Signifies that the stress grade has been assessed by Mechanical Stress Grading.
MPG	Signifies the stress grade has been assessed by Machine Proof Grading.
PRODUCERS BRAND	Registered trade name of the licensed Quality Control Division member.

Typical brands are illustrated in Figure 2.

PORTLAND BOLT & MANUFACTURING COMPANY
Construction fastener manufacturer since 1912

(800) 547-6758
Fax: (503) 227-4634
Email: sales@portlandbolt.com

Hex Lag Screws

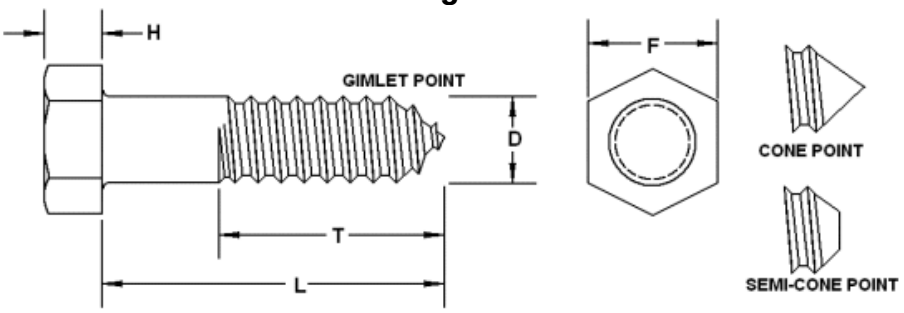

Bolt Diameter	D Body Diameter Max	D Body Diameter Min	F Width Across Flats	H Head Height	Threads Per Inch	Thread Dimension Pitch	Thread Dimension Flat At Root	Thread Dimension Depth of Thread	Thread Dimension Root Diameter
3/8	0.388	0.360	9/16	1/4	7	0.143	0.062	0.055	0.265
1/2	0.515	0.482	3/4	11/32	6	0.167	0.072	0.064	0.371
5/8	0.642	0.605	15/16	27/64	5	0.200	0.086	0.077	0.471
3/4	0.768	0.729	1-1/8	1/2	4-1/2	0.222	0.096	0.085	0.579
7/8	0.895	0.852	1-5/16	37/64	4	0.250	0.108	0.096	0.683
1	1.022	0.976	1-1/2	43/64	3-1/2	0.286	0.123	0.110	0.780
1-1/8	1.149	1.098	1-11/16	3/4	3-1/4	0.308	0.133	0.119	0.887
1-1/4	1.277	1.223	1-7/8	27/32	3-1/4	0.308	0.133	0.119	1.012
1-3/8	1.404	1.346	2-1/16	29/32	3	0.333	0.143	0.128	1.119
1-1/2	1.531	1.469	2-1/4	1	3	0.333	0.143	0.128	1.244

Dimensional specifications per ASME B18.2.1

STANDARD THREAD LENGTH

The minimum thread length shall be equal to half the nominal screw length plus 1/2" or 5", whichever is less.

STOCK

Diameter: 3/8" – 3/4"
Length: 18" maximum
Origin: Import only
Finish: Black and hot dip galvanized

Note: Hex lag screws larger than 3/4" in diameter and all **square lag screws** are rarely available in the marketplace as a stocked item.

MANUFACTURING

Portland Bolt manufactures lag screws from 3/8" diameter through 1-1/2" diameter in most **ASTM**, **AASHTO**, and SAE specifications. Special tooling can be created to produce nonstandard head dimensions or bolt heads with your company's name and/or logo.

One should consider longer than standard thread lengths for lag screws which are extremely long. Unless otherwise specified, Portland Bolt manufactures nonstandard lag screw with a thread length of half the bolt length plus 1/2" regardless of the length of the bolt. Unless otherwise specified, nonstandard lag screws manufactured by Portland Bolt will possess a semi-cone point rather than a gimlet or cone point. A full point is unnecessary since a pilot hole nearly as large as the root diameter of the lag screw will need to be drilled prior to installation. Additionally, a gimlet point is designed for small diameter screws so they can be installed without a pilot hole. Lag screws in diameters listed in the above table do not require a gimlet point since too much torque

would be required to install the large screws without drilling a pilot hole first. Without a pilot hole, the heads of the screws will often break before the lag is properly installed.

APPLICATION

Hex lag screws are used in wood construction. **Square lag screws** are used for aesthetic purposes and provide a rustic look.

Portland Bolt & Manufacturing Co - 3441 NW Guam Street - Portland - Oregon - 97210
 Phone: 800.547.6758 | **sales@portlandbolt.com**

CC Column Caps

Material: CC3 1/4, CC44, CC46, CC48, CC64, CC66, CC68, CC6-7 1/8 - 7 gauge; all others - 3 gauge

Finish: Simpson gray paint; may be ordered HDG; CCO - no finish.

Installation:

- Use all specified fasteners. See General Notes.
- Bolt holes shall be a minimum of 1/32" to a maximum of 1/16" larger than the bolt diameter (per 2001 NDS, section 11.1.2).
- Contact engineered wood manufacturers for connections that are not through the wide face.

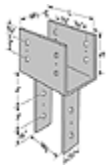

Load Table
Gallery of images
Code Reports
Drawings
Related Catalogs
Related Categories
Technical Bulletins
Fliers
Help for downloads

Options:

- See Ornamental Notched CC
- See Ornamental Non-Notched CC
- Straps may be rotated 90° where W1 ≥ W2 (see illustration).
- For special, custom, or rough cut lumber sizes, provide dimensions. An optional W2 dimension may be specified with any column size given (note that the W2 dimension on straps rotated 90° is limited by the W1 dimension).
- Column caps with W1, L, H1, and hole schedules different from the table may be special ordered. Provide a drawing to ensure accuracy.

CCO - Column cap only (no straps) may be ordered for field-welding to pipe or other columns. No loads apply. CCO dimensions are the same as CC.

CCOB - Any two CCOs may be specified for back-to-back welding to create a cross beam connector. Use the table loads; the load is no greater than the lesser element employed.

CCC/CCT - Cross Column Cap/T Column Cap. 7 gauge stirrups may be welded to column cap sides. Uplift loads do not apply to side stirrups. Column cap only (no straps) may be ordered for field-welding to pipe or other columns. No loads apply. Specify CCOC/CCOT.

The following criteria apply:

1. The side stirrup maximum allowable download cannot exceed 40% of the download in the table for the unmodified product, and cannot exceed 10,665 lbs. The sum of the loads cannot exceed the table load. The column width in the direction of the beam width must be the same as the beam width: W1.
2. Specify the stirrup height from the top of the cap. The minimum H2/H3 for the stirrup is 6 1/2" (3 1/2" for 44s).

3. The L dimension may vary depending on W3 or W4.

Ordering examples: A CCC66 with W3 = 5 1/2", H2 and H3 = 6 1/2" is a CC66 column cap with 5 1/2" beams on each side with all beam seats flush.

Gallery:

top

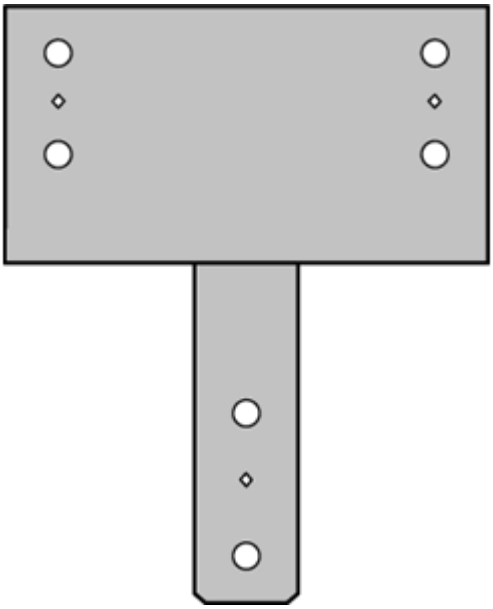

roll over images below to see larger image

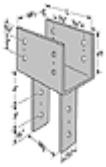

CC

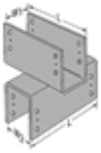

CCOB

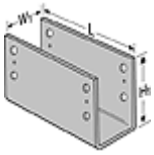

CCO

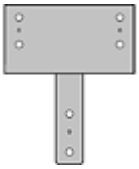

Optional CC with straps rotated 90°

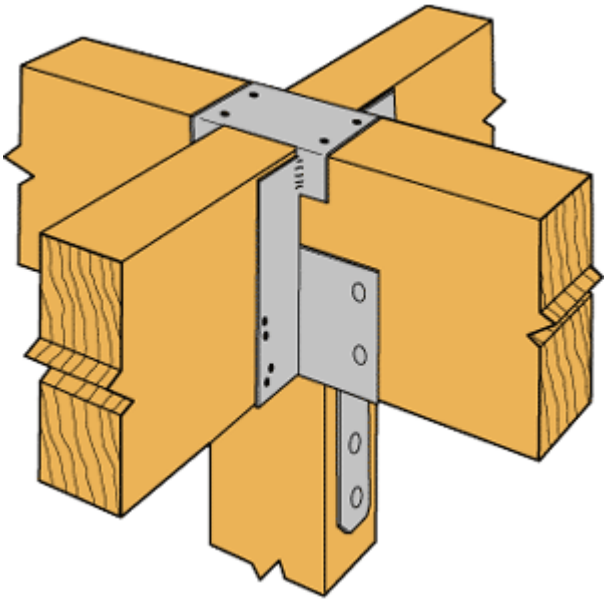

roll over images below to see larger image

There are cost-effective alternatives for replacing column caps by using a combination of connectors. Here are some examples. Designer must specify the options required.

NOTE: The side stirrup will be welded flush with the top of the main cap.

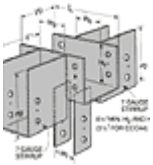

CCC

Instead of the column cap, consider this connector combination.

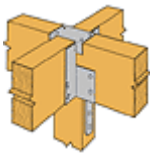

CC and HWD

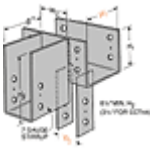

CCT

Instead of the column cap, consider this connector combination.

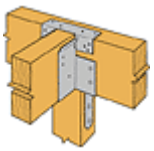

CC and GLT

Side stirrups are available in different depths.
Order each connector separately. Specify all side stirrup widths and heights.

For more information, see Form T-CC and the Product Worksheet.

Load Table:

top

These products are available with additional corrosion protection. Additional products on this page may also be available with this option, check with Simpson for details.

Model No.	Beam Width	Dimensions				Fasteners				Allowable Loads			CCO Model No. (No Legs)	Code Ref.
		W_1	W_2	L	H_1	Beam		Post		Uplift		Down		
						Qty	Dia	Qty	Dia	(133)	(160)	(100)		
CC3¼-4	3⅛	3¼	3⅝	11	6½	4	⅝	2	⅝	3035	3640	19250	CCO3¼	20, 142
CC3¼-6	3⅛	3¼	5½	11	6½	4	⅝	2	⅝	3035	3640	19250		
CC44	4x	3⅝	3⅝	7	4	2	⅝	2	⅝	1220	1465	15310	CCO4	
CC46	4x	3⅝	5½	11	6½	4	⅝	2	⅝	2330	2800	24060	CCO4/6	
CC48	4x	3⅝	7½	11	6½	4	⅝	2	⅝	2330	2800	24060		170
CC5¼-4	5⅛	5¼	3⅝	13	8	4	¾	2	¾	6305	7530	37310	CCO5¼	20, 80, 142
CC5¼-6	5⅛	5¼	5½	13	8	4	¾	2	¾	6275	7530	37310		
CC5¼-8	5⅛	5¼	7½	13	8	4	¾	2	¾	6275	7530	37310		
CC64	6x	5½	3⅝	11	6½	4	⅝	2	⅝	3365	4040	37810	CCO6	
CC66	6x	5½	5½	11	6½	4	⅝	2	⅝	3365	4040	37810		
CC68	6x	5½	7½	11	6½	4	⅝	2	⅝	3365	4040	37810		
CC6-7⅛	6x	5½	7⅛	11	6½	4	⅝	2	⅝	3365	4040	37810		170
CC7⅛-4	7	7⅛	3⅝	13	8	4	¾	2	¾	6260	7510	68250	CCO7⅛	
CC7⅛-6	7	7⅛	5½	13	8	4	¾	2	¾	6320	7585	68250		
CC7⅛-7⅛	7	7⅛	7⅛	13	8	4	¾	2	¾	6320	7585	68250		
CC7⅛-8	7	7⅛	7½	13	8	4	¾	2	¾	6320	7585	68250		
CC74	6¾	6⅞	3⅝	13	8	4	¾	2	¾	6270	7525	49140	CCO7	
CC76	6¾	6⅞	5½	13	8	4	¾	2	¾	6270	7525	49140		20, 80, 142
CC77	6¾	6⅞	6⅞	13	8	4	¾	2	¾	6270	7525	49140		
CC78	6¾	6⅞	7½	13	8	4	¾	2	¾	6270	7525	49140		
CC86	8x	7½	5½	13	8	4	¾	2	¾	6200	7440	54600	CCO8	
CC88	8x	7½	7½	13	8	4	¾	2	¾	6200	7440	54600		
CC96	8¾	8⅞	5½	13	8	4	¾	2	¾	6260	7515	63700	CCO9	
CC98	8¾	8⅞	7½	13	8	4	¾	2	¾	6260	7515	63700		
CC106	10x	9½	5½	13	8	4	¾	2	¾	6260	7515	69160	CCO10	

1. Post sides are assumed to lie in the same vertical plane as the beam sides.
2. Loads may not be increased for short-term loading.
3. Downloads are determined using $F_c\perp$ equal to: 560 psi for glulam sizes and CC86, CC88 and CC106; 750 psi for 7 1/8" size; 625 psi for all others; reduce where end grain bearing or buckling capacity of the column, or other criteria are limiting.
4. Uplift loads have been increased for earthquake or wind load durations with no further increase allowed; reduce where other loads govern. Uplift loads are limited by the beam shear capacity per 2001 NDS except CC76, CC78, and CC96 through CC106.
5. Spliced conditions must be detailed by the Designer to transfer tension loads between spliced members by means other than the column cap.
6. Uplift loads do not apply to splice conditions.
7. Beam depth must be greater than H_1.
8. For 5 1/4" engineered lumber, use CCO6X models.

▲top

IUS/IUT/MIU I-Joist Hangers

VALUE ENGINEERED

The improved IUS is now fully compatible with shallow flange I-joists!

I-joists with flange thicknesses between 1 1/8" and 1 1/2" achieve the full allowable table loads including uplift values and joist nails are not required! The IUS is a hybrid hanger that incorporates the advantages of the face mount and top mount hanger. Installation is fast with the Strong-Grip™ seat, easy-to-reach face nail locations and self-jigging locator tabs.

The MIU series hangers are designed for commercial and high load I-joist applications without requiring web stiffeners. The MIU features Positive Angle Nailing (PAN), which minimizes splitting of the flanges while permitting time-saving nailing from a better angle.

The IUT features a bend-tab which nails into the I-joist's bottom flange when web stiffeners are not used, or directly into the web stiffener. I-joist flange thickness for bend-tab application is 1 1/8" to 1 1/2".This constrains the member, helping to reduce squeaks resulting from joist movement.

Refer to Joist Manufacturer's literature or appropriate Simpson Connector Selection Guide for actual joist sizes.

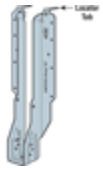

installation video

Load Tables
Gallery of images
IUS Installation Sequence
Wood I-Joists
Code Reports
Drawings
Related Catalogs
Related Categories
Technical Bulletins
Fliers
Help for downloads

Material: See tables.

Finish: Galvanized

Uplift Loads:

- Models have optional triangle joist nail holes for additional uplift. Properly attached web stiffeners are required.
- IUT - add two additional 10dx1 1/2" joist nails for a total uplift load of 480 lbs and 575 lbs (33% and 60% increase respectively).
- MIU - add four additional 10dx1 1/2" joist nails for a total uplift load of 720 lbs and 865 lbs (33% and 60% increase respectively).
- IUS - add web fillers and two 10dx1 1/2" joist nails in the triangle holes for a total uplift of 240 lbs.

Installation:

- Use all specified fasteners. Verify that the header can take the required fasteners specified in the table. See more installation information.
- IUS - fasten hanger to header. Position I-joist into hanger and snap into place. No joist nailing required. Some IUS models have triangle and round header nail holes. To achieve Max. download, fill both round and triangle holes.
- IUS - Locator tabs are not structural. They may be bent back to adjust for hanger placement.
- IUS - for rimboard applications see T-RIMBDHGR.
- IUT - optional seat diamond hole allows alternate attachment of hanger. See T-OPTUPLIFT.
- Web stiffeners are not required with I-joists when the joist top flange is laterally supported by the sides of the

hanger. I-joist manufacturers may require web stiffeners.

Options:

These hangers cannot be modified. However, these models will normally accommodate a skew of up to 5°. For sloped joists up to 1/4:12 there is no reduction, between 1/4:12 and up to 1/2:12, tests show a 10% reduction in ultimate hanger strength. Local crushing of the bottom flange or excessive deflection may be limiting; check with joist manufacturer for specific limitations on bearing of this type.

Gallery:

top

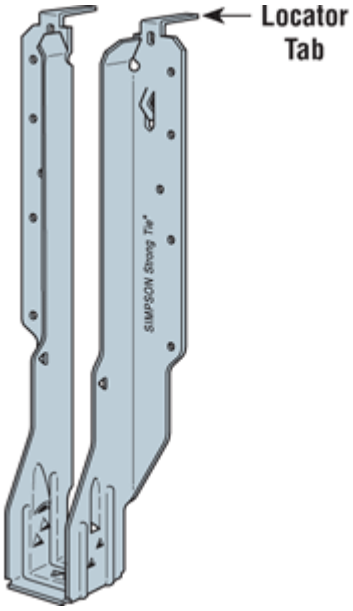

roll over images below to see larger image

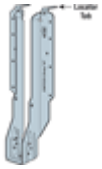

IUS
(some IUS models have triangle holes in header flanges for Min/Max nailing)
U.S. Patent 6,523,321

The Strong-Grip™ seat secures I-joists in position without joist nails IUS

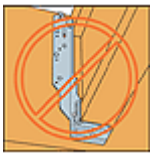

AVOID A MISINSTALLATION
Do not make your own holes. Do not nail the bottom flange.

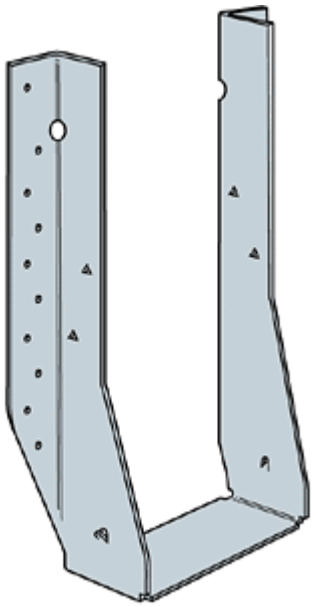

roll over images below to see larger image

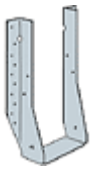

MIU

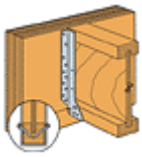

MIU with correct PAN installation

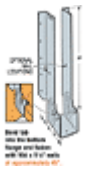

IUT
U.S. Patent 5,555,694

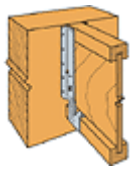

Typical IUT

IUS Installation Sequence:

top

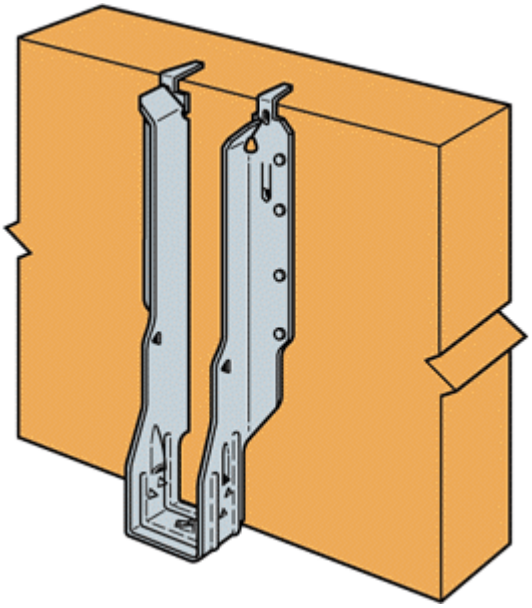

roll over images below to see larger image

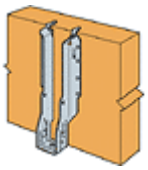

Step 1
Attach the IUS to the header

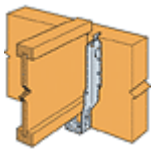

Step 2
Slide the I-joist downward into the IUS until it rests above the large teardrop.

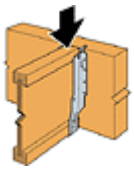

Step 3
Firmly push or snap I-joist fully into the seat of the IUS.

Wood I-Joists:

top

Sloped Joists

For sloped joists up to 1/4:12 there is no reduction. For slopes greater than 1/4:12 see individual product pages or refer to technical bulletin T-SLOPEJST.

Multiple Joists

Multiple joists should be adequately connected together to act as one unit.

Fasteners

Use the correct nails. Wood may split if the nails are too large. Hanger nails into flanges should not exceed 10d common (0.148 dia.), no longer than 1 1/2". Nails into web stiffeners should not exceed 16d commons (0.162 dia.).

Eccentrically-Loaded I-Joists

Supporting a top flange hanger may require bottom flange restraining straps, blocking or directly-applied ceiling systems to prevent rotation at the hanger location.

roll over images below to see larger image

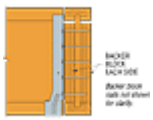

Nail Pattern
Face Mount Hanger

Attach backer block with 10-10d nails. solid-sawn backer blocks may split if a row of closely-spaced nails goes along the wood grain.
For I-joist to I-joist connections,

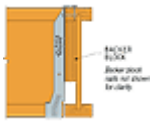

I-Joist Headers
Top Flange Hanger

When supporting one I-joist from another, install backer blocks to the carrying I-joist with 10-10d nails. Check with the joist manufacturer to see if backer blocks are required on both sides.

the nails should extend through backer block and web. Refer to manufacturer's literature for other attachment details.

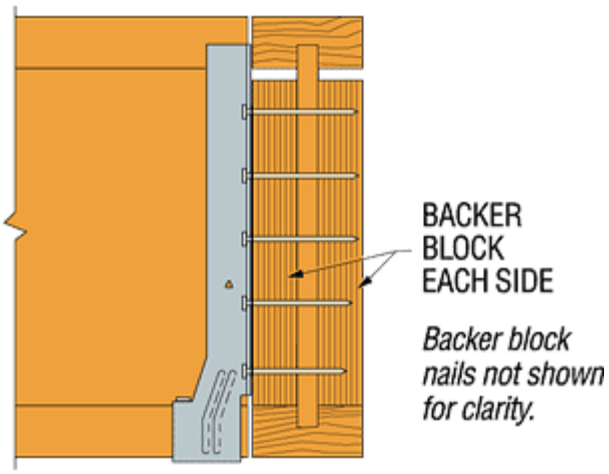

Code Reports (PDFs): See table above, if available, for specific product code references

▲top

ICC NER Reports (formerly NES Reports) **about the ICC**

Code Ref. 8: NER469 (529k)

ABU, FA, FJA, FSA, GT2, GTF, LPC, THAI, ITT, IUT, THJA, PA51, PA68, HETA, HETAL, HPAHD22-2P

ICC ER Reports (formerly ICBO Reports) **about the ICC**

Code Ref. 44: ER5824 (233k)

IUS Series I-Joist Hangers

Code Ref. 36: ER5655 (1.5mb)

ABU Series, FA, FJA, FSA, GT2, GTF, LPC, THAI, Straight and Top Flange Nailing, ITT and IUT Series, THJA, PA51/PA68

City of Los Angeles Research Reports

Code Ref. 108: RR25568 (286k)

IUS Series I-Joist Hangers

Code Ref. 91: RR25158 (686k)

THAI, ITT and IUT Hangers, ABU Adjusted Post Base, FA, FJA and FSA Foundation Anchors

Florida Statewide Product Approvals

Code Ref. 126: FL1463

View the products covered in FL1463

Code Ref. 121: FL474

View the products covered in FL474

Code Ref. 146: FL6482

View the products covered in FL6482

LUS/MUS/HUS/HHUS/HGUS/HUSC Double Shear Joist Hangers for Plated Trusses

VALUE ENGINEERED

The MUS offers increased load capacity and bearing compared to LUS connectors for medium load truss applications. All hangers in this series have double-shear nailing. This patented innovation distributes the load through two points on each joist nail for greater strength. It also allows the use of fewer nails, faster installation, and the use of common nails for all connections. (Do not bend or remove tabs)

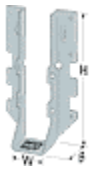

Dimensions
Reduced Heel Height
Allowable Loads - DF/SP
Load Tables
Hanger Options
Gallery of images
Code Reports
Drawings
Related Catalogs
Related Categories
Technical Bulletins
Fliers
Help for downloads

Material: See tables.

Finish: Galvanized. Some products available in stainless steel or ZMAX®; see Corrosion Information.

Installation:

- Use all specified fasteners. See General Notes.
- Nails must be driven at an angle through the joist or truss into the header to achieve the table loads.
- Not designed for welded or nailer applications.
- 16d sinkers (0.148" dia. x 3 1/4" long) may be used where 10d commons are specified with no reduction in load. Where 16d commons are specified, 10d commons or 16d sinkers (0.148" dia x 3 1/4" long) may be used at 0.85 of the table load.
- With 3x carrying members, use 16d x 2 1/2" nails into the header and 16d commons into the joist with no load reduction. With single 2x carrying members, use 10d x 1 1/2" nails into the header and 10d commons into the joist, and reduce the load to 0.64 of the table value.

Options:

- LUS and MUS hangers cannot be modified.
- HUS hangers available with the header flanges turned in for 2-2x (3 1/8") and 4x only, with no load reduction. See HUSC Concealed Flange illustration below.
- Concealed flanges are not available for HGUS and HHUS.
- See Hanger Options, for sloped and/or skewed HHUS models.
- Other sizes available; consult your Simpson representative.
- Joining Multiple Truss Plies: Girder Trusses and Two-Ply 4x2 Floor Trusses
- Suggested Truss Modifications to Achieve Design Values

Gallery:

top

roll over images below to see larger image

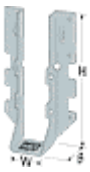
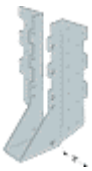

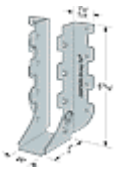

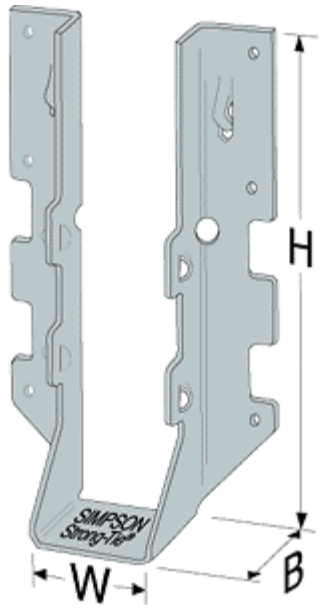

LUS28

HUS210 (HUS26, HUS28, and HHUS similar)

HUS412

MUS28

HUSC Concealed Flanges (not available for HHUS, HGUS and HUS2x)

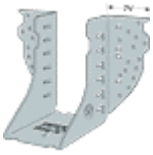

HGUS28-2

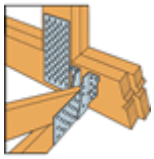

Typical HUS26 with Reduced Heel Height
(Truss Designer to provide fastener quantity for connecting multiple members together)

roll over images below to see larger image

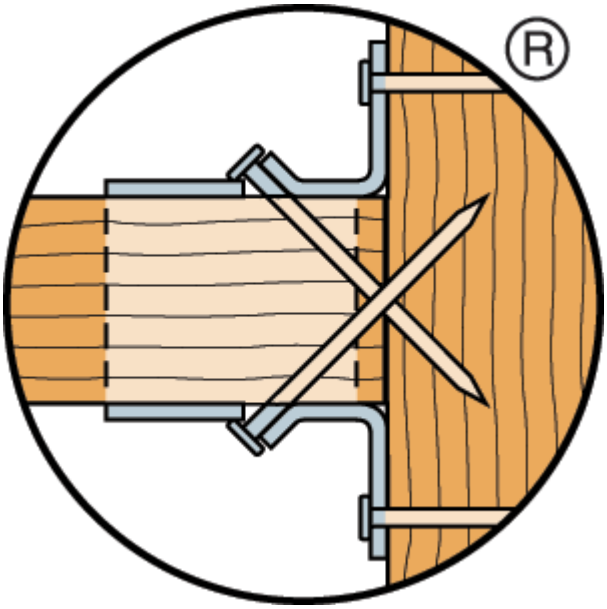

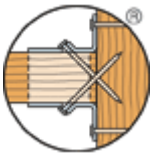

Double Shear Nailing Top View

Double Shear Nailing Side View
Do not bend tab

Dome Double Shear Nailing Side View (available on some models)
U.S. Patent 5,603,580

Dimensions: also see Face Mount Hangers Load Tables for Plated Truss

top

These products are available with additional corrosion protection. Additional products on this page may also be available with this option, check with Simpson for details.

Model No.	Min. Heel Height	Ga	Dimensions			Fasteners	
			W	H	B	Carrying Member	Carried Member
SINGLE 2x SIZES							
LUS24	2⅝	18	1 9/16	3⅛	1¾	4-10d	2-10d
LUS26	4¼		1 9/16	4¾	1¾	4-10d	4-10d
MUS26	4 11/16	18	1 9/16	5 3/16	2	6-10d	6-10d
HUS26	4 5/16	16	1⅝	5⅜	3	14-16d	6-16d
HGUS26	4 9/16	12	1⅝	5⅜	5	20-16d	8-16d
LUS28	4 3/16	18	1 9/16	6⅝	1¾	6-10d	4-10d
MUS28	6 5/16	18	1 9/16	6 13/16	2	8-10d	8-10d
HUS28	6½	16	1⅝	7	3	22-16d	8-16d
HGUS28	6 9/16	12	1⅝	7⅛	5	36-16d	12-16d
LUS210	4¼	18	1 9/16	7 13/16	1¾	8-10d	4-10d
HUS210	8⅜	16	1⅝	9	3	30-16d	10-16d

1. See Face Mount Hangers Load Tables for Plated Truss for allowable loads.

Reduced Heel Height Allowable Loads - DF/SP: (see Typical HUS26 with Reduced Heel Height illustration above)

top

These products are available with additional corrosion protection. Additional products on this page may also be available with this option, check with Simpson for details.

Model No.	Reduced Heel Height	No. of Carrying Member Plys	Joist Nails	Face Nails	Uplift		2x6 Carrying Member					2x8 Carrying Member				
							Floor	Snow	Roof	Wind	Wind	Floor	Snow	Roof	Wind	Wind
					(133)	(160)	(100)	(115)	(125)	(133)	(160)	(100)	(115)	(125)	(133)	(160)
LUS26	3⅞	1	3-10d	4-10d	730	875	700	805	875	935	1000	700	805	875	935	1000
		2	3-10d	4-10d	730	875	775	890	970	1030	1235	775	890	970	1030	1235
MUS26	3½	1	4-10d	6-10d	725	725	1000	1150	1250	1330	1390	1000	1150	1250	1330	1390
		2	4-10d	6-10d	725	725	1110	1280	1390	1420	1420	1110	1280	1390	1420	1420
HUS26	3½	1	4-10d	14-10d	865	865	1760	1950	1950	1950	1950	1500	1725	1880	1950	1950
			4-16d	14-16d	1035	1035	1980	2155	2155	2155	2155	1500	1725	1880	2000	2155
		2	4-10d	14-10d	865	865	1950	1950	1950	1950	1950	1950	1950	1950	1950	1950
			4-16d	14-16d	1035	1035	2425	2695	2695	2695	2695	2425	2695	2695	2695	2695
HGUS26	3 9/16	2	6-10d	20-10d	1510	1510	2350	2350	2350	2350	2350	2350	2350	2350	2350	2350
			6-16d	20-16d	1745	1745	2830	2830	2830	2830	2830	2830	2830	2830	2830	2830
LUS28	3⅞	1	3-10d	6-10d	730	875	700	805	875	935	1000	900	1035	1125	1200	1245
		2	3-10d	6-10d	730	875	775	890	970	1030	1235	1010	1160	1260	1340	1480
MUS28	3½	1	4-10d	8-10d	775	775	1000	1150	1250	1330	1390	1200	1300	1300	1300	1300
		2	4-10d	8-10d	775	775	1110	1280	1390	1420	1420	1345	1550	1685	1690	1690
HUS28	3½	1	4-10d	22-10d	835	835	1760	1950	1950	1950	1950	1980	1980	1980	1980	1980
			4-16d	22-16d	1000	1000	1980	2155	2155	2155	2155	2810	2980	2980	2980	2980
		2	4-10d	22-10d	835	835	1950	1950	1950	1950	1950	2475	2475	2475	2475	2475
			4-16d	22-16d	1000	1000	2425	2695	2695	2695	2695	3210	3270	3310	3340	3450
HGUS28	3 9/16	2	6-10d	36-10d	1395	1395	2350	2350	2350	2350	2350	3105	3105	3105	3105	3105
			6-16d	36-16d	1610	1610	2830	2830	2830	2830	2830	3740	3740	3740	3740	3740

1. Allowable loads shown consider ANSI/TPI 1-2002 member design criteria.
2. For allowable loads on 2x10 girder bottom chords, multiple ply hangers and on SPF/HF header wood species, refer to Technical Bulletin T-

REDHEEL.

3. HGUS, HHUS and HGUQ hangers installed with the joist fastener quantities shown above are recommended for installation on minimum 2-ply 2x girder bottom chords. See T-REDHEEL for HHUS and HGUQ allowable loads.
4. Allowable loads are based on the lowest joist fastener holes filled. For the LUS, fill the two lowest joist fasteners holes on the right side of the hanger and the single lowest joist fastener hole on the left side of the hanger.
5. Wind (133) and (160) is a download rating.
6. NAILS: 16d = 0.162" dia. x 3 1/2" long, 16dx2 1/2 = 0.162" dia. x 2 1/2" long, 10d = 0.148" dia. x 3" long, 10dx1 1/2 = 0.148" dia. x 1 1/2" long. See other nail sizes and information.

Code Reports (PDFs): See table above, if available, for specific product code references ▲top

ICC NER Reports (formerly NES Reports) **about the ICC**

Code Ref. 3: NER413 (907k)

A34/A35, A35F, DS, FC, HH, J/JP, L-30, L-50, L70 and L-90, NCA, NBA, SA and HSA, ST, FHA, MST, MSTI, CMST and HST, TB, TC, VB and VBP, THMA, LTS/MTS, CS16, 18, 20, 22, WB, HGUS26-2, HGUS28-2, HGUS210-2, HGUS46, HGUS48, HGUS410

Code Ref. 4: NER421 (360k)

AC and ACE, BC, F, RR, Z, LUS, HHUS and HUS, A, LSSU, PF, RTC

Code Ref. 1: NER209 (421k)

MIT, LSU, MAS, WM, LUS, HUSTF, HUS, THA, VPA

Code Ref. 9: NER499 (465k)

ABE, U, H10, HRC, HCP, HFA, LUS, CS16, CS18, CS20, CS22, LSTI, CPAI, PBV6, PBV10, HS24, MSTC28, MSTC40, MSTC52, MSTC66, MSTC78

ICC ER Reports (formerly ICBO Reports) **about the ICC**

Code Ref. 39: ER5672 (773k)

A34/A35/A35F, DS, FC, HH, J, JP44, L-30/L-50/L-70/L-90, NCA, NBA, SA, HSA, ST, FHA, MST, MSTI, CMST, HST, TB, TC, VB, VBP, THMA, THMA-2, LTS, MTS, CS16/CS18/CS20/CS22, WB, HGUS.

Code Ref. 37: ER5656 (491k)

AC and ACE Series, BC Series, F Series, RR, Z, LUS/HHUS/HUS Series, A, PF, PFA, RTC Connectors

Code Ref. 47: ER6119 (224k)

GBC Gable Brace Connector, VTC Valley Truss Connector, TSB Truss Spacer Brace, MUS Joist Hanger, LTHJA26 Truss Hip/Jack Hanger, THAL/R422 Adjustable Truss Hanger

City of Los Angeles Research Reports

Code Ref. 87: RR25076 (1.1mb)

AC/ACE, BC Series Post Caps, F Series Hangers, RR Ridge Rafter Connectors, Z Panelized Stiffener Clips, LUS Hangers, A Angles, LSSU Light Sloped Skewed Hangers

Code Ref. 84: RR24949 (597k)

Joist Hangers and Framing Connectors: HUS2X-2, HUS4X, HUSC, HUSTF, LSU, LUS2X-2, LUS2X-3, LUS3X, LUS4X, LUSC, MIT, THA, THA29, VP, WM

Florida Statewide Product Approvals

Code Ref. 133: FL3750

View the products covered in FL3750

Face Mount Hangers Load Table for Solid-Sawn Lumber (DF & SP)

► Code Reports ► 2x4 – Tpl 2x10 ► Quad 2x10 – 4x4 ► 4x6 – 8x16 ► All Face Mount Hanger Tables

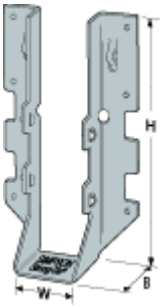

These products are available with additional corrosion protection. Additional products on this page may also be available with this option, check with Simpson for details.

Joist Size	Model No.	Ga	Dimensions			Fasteners			Doug Fir Larch/Southern Pine Allowable Loads								Installed Cost Index (ICI)	
			W	H	B	Header		Joist	Uplift		Floor (100)		Snow (115)		Roof (125)			
						10d	16d		(133)	(160)	10d	16d	10d	16d	10d	16d		
SAWN LUMBER SIZES																		
QUAD 2x10	HHUS210-4	14	6⅛	8⅞	3	—	30-16d	10-16d	2855	3430	—	5190	—	5900	—	5900	*	
	HGUS210-4	12	6 11/16	9⅛	4	—	46-16d	16-16d	3630	3630	—	8780	—	8940	—	8940	*	
2x12	LUS210	18	1 9/16	7 13/16	1¾	8-10d	—	4-10d	930	1115	1275	—	1470	—	1595	—	Lowest	4, 37
	LU210	20	1 9/16	7 13/16	1½	10-10d	10-16d	6-10dx1½	735	850	1110	1330	1275	1530	1390	1660	+11%	
	U210	16	1 9/16	7 13/16	2	10-10d	10-16d	6-10dx1½	720	865	1110	1330	1275	1530	1390	1660	+53%	2
	LUC210Z	18	1 9/16	7¾	1¾	10-10d	10-16d	6-10dx1½	925	1100	1185	1410	1345	1605	1455	1735	+180%	
	HU212	14	1 9/16	9	2¼	—	10-16d	6-10dx1½	720	865	—	1340	—	1540	—	1675	+347%	
	HUS210	16	1⅝	9	3	—	30-16d	10-16d	2845	3000	—	3775	—	3920	—	4020	+378%	4,
DBL 2x12	LUS210-2	18	3⅛	9	2	—	8-16d	6-16d	1550	1550	—	1765	—	2030	—	2210	Lowest	1
	U210-2	16	3⅛	8½	2	14-10d	14-16d	6-10d	890	1065	1555	1860	1785	2140	1940	2330	+40%	2
	LUS214-2	18	3⅛	10 15/16	2	—	10-16d	6-16d	1550	1550	—	2030	—	2335	—	2540	+56%	1
	HUS210-2	14	3⅛	9 3/16	2	—	8-16d	8-16d	2050	2590	—	2010	—	2310	—	2510	+136%	1, 8
	HUS212-2	14	3⅛	10¾	2	—	10-16d	10-16d	2560	3240	—	2510	—	2885	—	3140	+156%	1
	HU212-2 (Min)	14	3⅛	10 9/16	2½	—	16-16d	6-10d	905	1085	—	2145	—	2465	—	2680	+387%	
	HU212-2 (Max)	14	3⅛	10 9/16	2½	—	22-16d	10-10d	1505	1810	—	2950	—	3390	—	3685	+411%	
TPL 2x12	LUS210-3	18	4⅝	8 3/16	2	—	8-16d	6-16d	1550	1550	—	1765	—	2030	—	2210	*	
	HU212-3 (Min)	14	4 11/16	10 5/16	2½	—	16-16d	6-10d	905	1085	—	2145	—	2465	—	2680	*	
	HU212-3 (Max)	14	4 11/16	10 5/16	2½	—	22-16d	10-10d	1505	1810	—	2950	—	3390	—	3685	*	
	U210-3	16	4⅝	7¾	2	14-10d	14-16d	6-10d	890	1065	1555	1860	1785	2140	1940	2330	*	2
2x14	LUS210	18	1 9/16	7 13/16	1¾	8-10d	—	4-10d	930	1115	1275	—	1470	—	1595	—	Lowest	4, 37
	LU210	20	1 9/16	7 13/16	1¾	10-10d	10-16d	6-10dx1½	735	850	1110	1330	1275	1530	1390	1660	+11%	
	U210	16	1 9/16	7 13/16	2	10-10d	10-16d	6-10dx1½	720	865	1110	1330	1275	1530	1390	1660	+53%	26,
	HU214	14	1 9/16	10⅛	2¼	—	12-16d	6-10dx1½	720	865	—	1610	—	1850	—	2010	+88%	
	U214	16	1 9/16	10	2	12-10d	12-16d	8-10dx1½	960	1150	1330	1595	1530	1835	1665	1995	+147%	26,
DBL 2x14	U210-2	16	3⅛	8½	2	14-10d	14-16d	6-10d	890	1065	1555	1860	1785	2140	1940	2330	Lowest	
	LUS214-2	18	3⅛	10 15/16	2	—	10-16d	6-16d	1710	1745	—	2030	—	2335	—	2540	+12%	
	HUS212-2	14	3⅛	10¾	2	—	10-16d	10-16d	2700	3240	—	2510	—	2885	—	3140	+83%	
	HU212-2 (Min)	14	3⅛	10 9/16	2½	—	16-16d	6-10d	905	1085	—	2145	—	2465	—	2680	+248%	
	HU212-2 (Max)	14	3⅛	10 9/16	2½	—	22-16d	10-10d	1505	1810	—	2950	—	3390	—	3685	+265%	
	HU214-2 (Min)	14	3⅛	12 13/16	2½	—	18-16d	8-10d	1205	1505	—	2410	—	2775	—	3015	+259%	
	HU214-2 (Max)	14	3⅛	12 13/16	2½	—	24-16d	12-10d	1810	2170	—	3215	—	3700	—	4020	+276%	
TPL 2x14	U210-3	16	4⅝	7¾	2	14-10d	14-16d	6-10d	890	1065	1555	1860	1785	2140	1940	2330	*	26,
	HU214-3 (Min)	14	4 11/16	12 1/16	2½	—	18-16d	8-10d	1205	1445	—	2410	—	2775	—	3015	*	
	HU214-3 (Max)	14	4 11/16	12 1/16	2½	—	24-16d	12-10d	1810	2170	—	3215	—	3700	—	4020	*	
2x16	U214	16	1 9/16	10	2	12-10d	12-16d	8-10dx1½	960	1150	1330	1595	1530	1835	1665	1995	Lowest	2
	HU214	14	1 9/16	10⅛	2¼	—	12-16d	6-10dx1½	720	865	—	1610	—	1850	—	2010	+130%	
	HU216	14	1 9/16	12 15/16	2¼	—	18-16d	8-10dx1½	960	1155	—	2410	—	2775	—	3015	+130%	
DBL 2x16	HUS212-2	14	3⅛	10¾	2	—	10-16d	10-16d	2700	3240	—	2510	—	2885	—	3140	Lowest	1
	HU216-2 (Min)	14	3⅛	13⅞	2½	—	20-16d	8-10d	1205	1445	—	2680	—	3080	—	3350	+111%	
	HU216-2 (Max)	14	3⅛	13⅞	2½	—	26-16d	12-10d	1810	2015	—	3485	—	4005	—	4355	+120%	
TPL 2x16	HU216-3 (Min)	14	4 11/16	13⅞	2½	—	20-16d	8-10d	1205	1445	—	2680	—	3080	—	3350	*	
	HU216-3 (Max)	14	4 11/16	13⅞	2½	—	26-16d	12-10d	1810	2015	—	3485	—	4005	—	4355	*	
3x4	U34	16	2 9/16	3⅜	2	4-10d	4-16d	2-10dx1½	240	265	445	530	510	610	555	665	*	26,
	HU34	14	2 9/16	3⅜	2½	—	4-16d	2-10dx1½	240	290	—	535	—	615	—	670	*	
3x6	U36	16	2 9/16	5⅜	2	8-10d	8-16d	4-10dx1½	480	575	890	1065	1020	1225	1110	1330	*	2
	LUS36	18	2 9/16	5¼	2	—	4-16d	4-16d	1140	1160	—	1000	—	1150	—	1250	*	

1. 10d commons or 16d sinkers may be used instead of the specified 16d at 0.85 of the table load value.
2. 16d sinkers may be used instead of the specified 10d commons with no load reduction. (16d sinkers are not acceptable for HDG applications).
3. Uplift loads have been increased 33% and 60% for earthquake or wind loading with no further increase allowed. Divide by 1.33 and 1.60 for normal loading such as in cantilever construction.
4. MIN nailing quantity and load values - fill all round holes; MAX nailing quantity and load values - fill all round and triangle holes.
5. DF/SP loads can be used for SCL that has fastener holding capacity of Douglas Fir.
6. Truss chord cross-grain tension may limit allowable loads. Refer to Technical Bulletins T-ANSITPISPF, T-ANSITPISP and T-ANSITPIDF for allowable loads that consider ANSI/TPI 1-2002 wood member design criteria.
7. NAILS: 16d = 0.162" dia. x 3 1/2" long, 10d = 0.148" dia. x 3" long, 10dx1 1/2 = 0.148" dia. x 1 1/2" long. See other nail sizes and information.

* Hangers do not have an Installed Cost Index.

Code Reports (PDFs): See table above, if available, for specific product code references ▲top

ICC NER Reports (formerly NES Reports) **about the ICC**

Code Ref. 4: NER421 (360k)

AC and ACE, BC, F, RR, Z, LUS, HHUS and HUS, A, LSSU, PF, RTC

Code Ref. 1: NER209 (421k)

MIT, LSU, MAS, WM, LUS, HUSTF, HUS, THA, VPA

Code Ref. 2: NER393 (358k)

ETA/TSS, MAB, HIT, JB/LB, PF, LU, LUP, LTT/LTTI, H1/H2/H2.5/H3/H4/H5, AB, EPB, LCB/CB, PA/PAI/PAT/PATM/PAR/PARP, MPAI, HPA, HPAT28/35

Code Ref. 9: NER499 (465k)

ABE, U, H10, HRC, HCP, HFA, LUS, CS16, CS18, CS20, CS22, LSTI, CPAI, PBV6, PBV10, HS24, MSTC28, MSTC40, MSTC52, MSTC66, MSTC78

ICC ER Reports (formerly ICBO Reports) **about the ICC**

Code Ref. 26: ER5117 (703k)

U Series, HU/HUTF, LBV/B/HB, HHB/GB/HGB, W/WNP/HW, SUR/SUL, HSUR/HSUL, EG/MEG/LEG, GLT/HGLT Glulam / Timber, GLS/HGLS Glulam Saddle

Code Ref. 37: ER5656 (491k)

AC and ACE Series, BC Series, F Series, RR, Z, LUS/HHUS/HUS Series, A, PF, PFA, RTC Connectors

Code Ref. 40: ER5708 (2.9mb)

MAB, HIT, JB/LB, PF, LU, LUP, HD, HDA, LTT/LTTI/MTT/HTT, H1/H2/H2.5/H2.5A/H3/H4/H5, AB, EPB, LCB/CB, PA/PAI/PAT/PATM/PAR/PAHD42, HPA/HPAHD22

City of Los Angeles Research Reports

Code Ref. 83: RR24947 (792k)

U, HU, HUTF, LBV, B, HB, HHB, GB, HGB, W, WNP, HW, GLT, HGLT, GLS, HGLS, GLST, HGLST, SUR, SUL, HSUR, HSUL, EG, MEG, LEG

Code Ref. 87: RR25076 (1.1mb)

AC/ACE, BC Series Post Caps, F Series Hangers, RR Ridge Rafter Connectors, Z Panelized Stiffener Clips, LUS Hangers, A Angles, LSSU Light Sloped Skewed Hangers

Code Ref. 84: RR24949 (597k)

Joist Hangers and Framing Connectors: HUS2X-2, HUS4X, HUSC, HUSTF, LSU, LUS2X-2, LUS2X-3,

Teragren, concerned with quality and sustainability

Since 1994, the founders of Teragren LLC have upheld a mission to help reduce the dependence on dwindling timber resources by manufacturing competitively priced, sustainably harvested bamboo flooring, panels and veneer.

As a manufacturer, Teragren directly controls production and quality

- Eleven manufacturing and quality assurance checkpoints.
- Strict management of moisture content to eliminate cupping and warping.
- Advanced state-of-the-art equipment to fortify durability.
- Independent U.S. testing results readily available to consumers.

Optimum 5.5™ Moso bamboo, harvested for performance

- Teragren uses only Optimum 5.5 Moso bamboo selected for its dense fibers (less expensive, softer bamboo species do not perform as well).
- The bamboo is harvested at maturity between 5½ to 6 years to achieve the highest level of hardness and enduring performance.
- Teragren bamboo panels and veneer are dimensionally more stable than maple and perform very favorably compared to traditional hardwoods.

Stringent standards for safety and sustainability add peace of mind

- Teragren uses only sustainably grown Optimum 5.5 Moso bamboo.
- Teragren's proprietary manufacturing adhesive emits formaldehyde at much lower levels than allowed by the strictest U.S. and European standards.
- Teragren's factories are ISO 9001:2000 and ISO 14001 certified for quality assurance.

Teragren Strand bamboo: U.S. Patent 5,543,197; Mexico Patent 204281

Coordinating Teragren bamboo flooring and accessories

Teragren bamboo flooring, stair parts, trim and floor vents are also made to exacting standards. For more information, ask for our flooring catalog or visit *www.teragren.com* to download the catalog in PDF format.

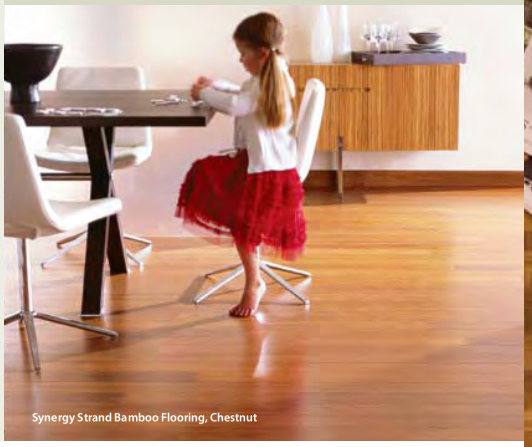

Synergy Strand Bamboo Flooring, Chestnut

Teragren
Fine Bamboo Flooring, Panels & Veneer

12715 Miller Road NE, Suite 301, Bainbridge Island, WA 98110
toll-free: 800.929.6333 tel: 206.842.9477
fax: 206.842.9456 email: info@teragren.com

www.teragren.com

Member: Architectural Woodwork Institute, Hardwood Plywood Veneer Association, American Institute of Architects, IIDA, U.S. Green Building Council, Business for Social Responsibility, World Floor Covering Association, National Association of Floor Covering Distributors, National Wood Flooring Association, National Kitchen & Bath Association.

Beautiful, Durable, Renewable Bamboo®

Panels, Veneer & Parquet Butcher Block

Teragren

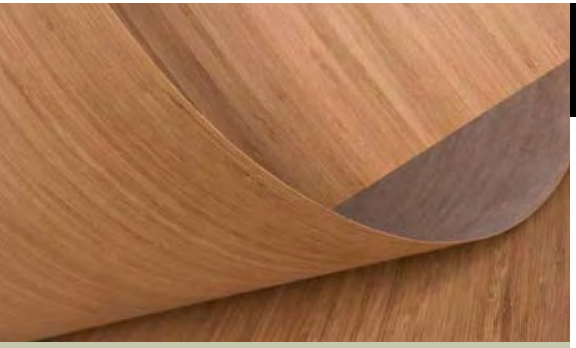

Why Teragren bamboo?

Uncommon beauty and versatility
The subtle grains and colors of Teragren bamboo hardwood panels, veneer and parquet butcher block complement an array of design styles from classic to contemporary in residential and commercial interior installations. Teragren also manufactures flooring, stair parts, moldings and floor vents in the same grains and colors as Teragren panels and veneer.

Durable and dimensionally stable
Teragren products are made from Optimum 5.5™ Moso bamboo (*Phyllostachys pubescens*) sustainably harvested at maturity between 5½ and 6 years for maximum stability and hardness. The result is products that are 25% harder than oak, 12% harder than maple, and contract and expand 2.5 times less than most traditional hardwoods. (View test results at *www.teragren.com*)

Multiple sizes to fit most projects and budgets
Teragren manufactures panels, veneer, parquet butcher block and edge banding in a wide range of sizes, grains and colors. This allows you the most flexibility in designing economically and efficiently.

Renewable and safe with two LEED® credits
Teragren bamboo panel and veneer products contribute to certification under the U.S. Green Building Council's LEED (Leadership in Energy & Environmental Design) Rating System: MR Credit 6: Rapidly Renewable Materials. To meet IEQ Credit 4.4, ask about our LEED Enhanced IEQ 4.4-compliant products that utilize a non-urea formaldehyde adhesive. Teragren's proprietary manufacturing adhesive emits formaldehyde at levels far below those allowed by the strictest standards in Europe and the U.S.

Customer service—custom orders, tech and specs online
Teragren tech support is very experienced in working with the materials in workshop situations and can also help you with custom orders, should the need arise. Specs available at *www.teragren.com*.

Available inventory, on-time delivery
Teragren panels and veneer are offered by stocking distributors across North America. In addition, Teragren maintains supplemental inventory in the United States to ensure available inventory and on-time delivery.

Cover photo: **Studio Vertical Grain Caramelized flooring and Bamboo Parquet Butcher Block.**

Complete Product Line

Hardwood panels and veneer for cabinetry, furniture, trim, doors, countertops or any interior building use.

- Grains: Vertical, Flat
- Colors: Natural, Caramelized
- Coordinating bamboo flooring, stair parts and flooring accessories
- Custom sizes available

Panels:
1´ x 6´ x ⅝˝ or ¾˝
1´ x 8´ x 13⁄16˝
4´ x 8´ x ¾˝ cross-ply
4´ x 8´ x ¾˝ solid stock
4´ x 8´ x ¼˝

Veneer:
4´ x 8´ x ⅛˝
17˝ x 98½˝ x 1⁄42˝
49˝ x 98½˝ x 1⁄42˝

Parquet butcher block:
30˝ x 96˝ x 1½˝
36˝ x 72˝ x 1½˝

Edge-banding:
Rolls: ⅞˝ x 500´ x 1⁄42˝

Custom-size panels or butcher blocks:
Available up to 4´ x 8´ x 3˝

Architectural casings:
2˝ x 96˝ x ¾˝
3⅝˝ x 96˝ x ¾˝


Flat Grain Natural


Flat Grain Caramelized


Vertical Grain Natural


Vertical Grain Caramelized


Butcher Block Natural


Butcher Block Caramelized

Strand panels are made from bamboo strands fused together with an environmentally safe adhesive to create a product 100% harder than red oak.

- Colors: Wheat or Chestnut
- Call for dimensions available


Wheat Strand Bamboo


Chestnut Strand Bamboo

Teragren Strand bamboo: U.S. Patent 5,543,197; Mexico Patent 204281

Fine Bamboo Panels, Veneer & Butcher Block

High-performance, furniture-grade bamboo hardwood panels and veneer

To assure performance and quality demanded of furniture-grade hardwood panels and veneer, Teragren products are professionally tested for hardness, adhesive formaldehyde levels, moisture content, deflection, flexural/strength, flammability, smoke density, compression strength, tensile strength and screw-holding both face and edge. Specifications, test results and Material Safety Data Sheets are available online at *www.teragren.com*.

Cross-ply Panels

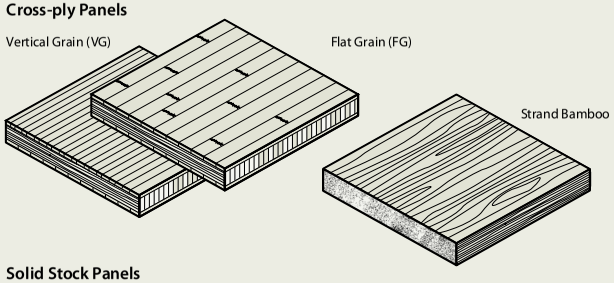

Solid Stock Panels


4´ x 8´ x 1⁄42˝ Veneer, Vertical Grain Caramelized


4´ x 8´ x ¾˝ Cross-ply Panels, Flat Grain Natural


4´ x 8´ x ¾˝ Panels, Vertical Grain Natural


Bamboo Parquet Butcher Block, Caramelized


4´ x 8´ x ¾˝ Cross-ply Panels, Vertical Grain Caramelized

www.teragren.com • e-mail: info@teragren.com • 800.929.6333

Teragren

FINE BAMBOO FLOORING, PANELS & VENEER

PRINT THIS PAGE RETURN TO SITE

Teragren LLC
12715 Miller Road N.E. Suite 301
Bainbridge Island, WA 98110

Emergency Phone: (206) 842-9477
Additional Information: (800) 929-6333
Email: Ann Knight

This Material Safety Data Sheet (MSDS) applies to all Teragren bamboo panels and veneer except the 1/42" veneer.

1. Product Identification

Product	Manufacturing Location
Unfinished Vertical Grain Panels Unfinished Flat Grain Panels	USA Headquarters - Bainbridge Island, WA.
Prefinished Vertical Grain Panels Prefinished Flat Grain Panels	USA Headquarters - Bainbridge Island, WA.

Synonyms: Bamboo Paneling, Cabinetry and Furniture System

2. Hazardous Ingredients/Identity Information

Name	CAS#	Percent	Agency	Exposure Limits	Comments
Bamboo[1]	None	88-89	OSHA OSHA ACGIH ACGIH	PEL-TWA 15 mg/m3 PEL-TWA 5 mg/m3 TLV-TWA 3 mg/m3 TLV-STEL 10 mg/m3	Total dust Respirable dust fraction Respirable dust fraction Inhalable particles
Urea formaldehyde resin solids[2]	9011-05-6	10-11	OSHA OSHA ACGIH	PEL-TWA 0.75 ppm PEL-STEL 2 ppm TLV- Ceiling 0.3 ppm	Free gaseous formaldehyde Free gaseous formaldehyde Free gaseous formaldehyde
UV Finish[3] Polymerized polyurethane	None	0-1	OSHA ACGIH	PEL-TWA None TLV-TWA None	None None

[1]Bamboo is a member of the grass family which has distinct anatomical differences from that of wood. Therefore, bamboo would be regulated as an organic dust in a category known as "Particulates Not Otherwise Regulated" (PNOR), or Nuisance Dust. By OSHA. The ACGIH classifies dust or particulate in this category as "Particulates Not otherwise Specified".

[2]Contains less than 0.1% free formaldehyde

[3]For pre-finished flooring

3. Hazard Identification

Appearance and Odor: A matrix of natural/blonde or caramel colored interlocking bamboo fibers bonded with low-fuming urea formaldehyde resin having a slightly aromatic odor.

Primary Health Hazards: The primary health hazards posed by these products are thought to be due to exposure to dust generated when machining this product (e.g. sanding, sawing, routing and or planning) and to a much lesser extent free gaseous formaldehyde.

Primary Route(s) of Exposure:
( ) Ingestion:
(X) Skin: Dust
(X) Inhalation: Dust or gas

Medical Conditions Generally Aggravated by Exposure: Gaseous formaldehyde or dust may aggravate preexisting respiratory conditions or allergies.

Chronic Health Hazards: Bamboo dust has not been associated with any long term health effects including cancer in animals as well as humans.

Carcinogenicity Listing:
(X) NTP: Formaldehyde, Group 2, A & B
(X) IARC Monographs: Formaldehyde, Group 2A;
(X) OSHA Regulated: Formaldehyde

NTP - Group 2: Reasonably anticipated to be a carcinogen. A) Limited evidence of carcinogenicity from studies in humans which indicates that causal relationship is credible.

B) Sufficient evidence of carcinogenicity from studies in experimental animals

IARC - Group 2A: Probably carcinogenic to humans; limited human evidence and sufficient evidence in experimental animals. Studies of cancer incidence among workers in a wide variety of occupations have failed to convincingly show carcinogenic activity of formaldehyde in humans. Gaseous formaldehyde has been shown to cause cancer in certain laboratory animals after long-term exposure to very high concentrations (14+ ppm), far above the levels of formaldehyde gas emitted by this product.

4. Emergency and First-Aid Procedures

Ingestion: Not applicable under normal use.

Eye Contact: Dust may cause mechanical irritation. Treat dust in eye as foreign object. Flush with water to remove dust particles. Get medical help if irritation persists.

Skin Contact: Although not applicable for this product in its purchased form, high concentrations of gaseous formaldehyde may cause allergic contact dermatitis in sensitized individuals resulting in redness, itching, and occasionally, hives. Frequent handling of dust or product in its manufactured form may cause some minor drying of the skin, mechanical abrasion, cuts or slivers. Wash hands after handling and obtain medical help if rash or irritation occurs.

Skin Absorption: Not known to occur under normal use.

Inhalation: Although not applicable for this product in it's purchased form (actual formaldehyde gas release levels from TimberGrass® Panel Products are 0.015 ppm). However, gaseous formaldehyde may cause respiratory difficulties for sensitized/allergic individuals. Bamboo dust may cause obstruction in the nasal passages, resulting in dryness of nose, dry cough and sneezing. Remove to fresh air. Get medical help if persistent irritation, severe coughing or breathing difficulty

occurs.

5. Fire and Explosion Data

Flash Point (Method Used): NAP

Flammable Limits:
LEL: NAP
UEL: NAP

Extinguishing Media: Water, carbon dioxide, sand or dry chemical.

Autoignition Temperature: Variable [typically 400-500oF (204-260oC)]

Special Firefighting Procedures: None.

Unusual Fire and Explosion Hazards: None

6. Accidental Release Measures

Steps to be Taken In Case Material Is Released or Spilled: Not applicable for product in purchased form. Dust generated from sawing, sanding, drilling, or routing of products may be vacuumed or shoveled for recovery or disposal. Avoid dusty conditions and provide good ventilation. A NIOSH-approved dust respirator should be worn if dust exposure limits are exceeded.

7. Handling and Storage

Precautions to be Taken In Handling and Storage: No special handling precautions are required for products in purchased form. Keep in cool, dry place away from open flame. This product will release small quantities of gaseous formaldehyde (0.01 ppm in accordance with ASTM E1333 test methods). Store in well ventilated area.

8. Exposure Control Measures

Personal Protective Equipment:

RESPIRATORY PROTECTION -- Not applicable for product in purchased form. A NIOSH-approved dust respirator is recommended when allowable exposure limits are exceeded.

PROTECTIVE GLOVES -- Not required. However, cloth, canvas, or leather gloves are recommended to minimize potential mechanical irritation slivers from handling and machining product.

EYE PROTECTION -- Not applicable for product in purchased form. Goggles or safety glasses are recommended when machining this product.

OTHER PROTECTIVE CLOTHING OR EQUIPMENT -- Not applicable for product in purchased form. Outer garments may be desirable in extremely dusty areas.

WORK/HYGIENE PRACTICES -- Follow good hygienic and housekeeping practices. Clean up areas where wood dust settles to avoid excessive accumulation of this combustible material. Minimize blowdown or other practices that generate high airborne-dust concentrations.

Ventilation:

LOCAL EXHAUST -- Provide local exhaust as needed so that exposure limits are met.

MECHANICAL (GENERAL) -- Provide general ventilation in processing and storage areas so that exposure limits are met.

SPECIAL - None.

OTHER - None.

9. Physical/Chemical Properties

Boiling Point (@ 760 mm Hg): NAP

Vapor Pressure (mm Hg): NAP

Vapor Density (air = 1; 1 atm): NAP

Specific Gravity (H2O = 1): 0.58 g/ml

Melting Point: NAP

Evaporation Rate (Butyl acetate = 1): NAP

Solubility in Water (% by weight): 0.1

% Volatile by Volume [@ 70oF (21oC)]: 0

pH: NAP

Oil-water distribution coefficient: NAP

Odor threshold: ND

10. Stability and Reactivity

Stability: ( ) Unstable (x) Stable

Conditions to Avoid: Avoid open flame. Product may ignite at temperatures in excess of 400oF (204oC).

Incompatibility (Materials to Avoid): Avoid contact with oxidizing agents.

Hazardous Decomposition or By-Products: Thermal decomposition products include carbon monoxide, carbon dioxide, aliphatic aldehydes, rosin acids, terpenes, and polycyclic aromatic hydrocarbons.

Hazardous Polymerization: ( ) May occur (x) Will not occur

Sensitivity to Mechanical Impact: NAP

Sensitivity to Static Discharge: NAP

11. Toxicological Information

None available for product in purchased form.

Formaldehyde OSHA Hazard rating = 3 for local and systemic acute and chronic exposures; highly toxic. Irritation studies: human skin, 150 ug/3 days, intermittent exposure produced mild results; human eye, 1 ppm/6 minutes, produced mild results. Toxicity studies: human inhalation TCLO of 8 ppm reported but response not specified; human inhalation TCLO of 17/mg/m3 for 30 minutes produced eye and pulmonary results; human inhalation TCLO of 300ug/m3 produced nose and CNS results; LC50 (rat, inhalation) = 1,000 mg/m3/30 minutes; LC50 (mice, inhalation) = 400mg/m3/2 hours.

Sources: Lewis, R.J., Sr. 1992 Sax's Dangerous Properties of Industrial Materials, Eighth Edition, Van Nostrand Reinhold, NY.; NIOSH Registry of Toxic Effects of Chemical Substances (RTECS), 1983-1984 Cumulative Supplement to 1981-1982 Edition and May 1995; OSHA Regulated Hazardous Substances, Government Institutes, Inc., February 1990.

12. Ecological Information

No information available at this time.

13. Disposal Considerations

Waste Disposal Method: If disposed of or discarded in its purchased form, incineration is preferable. Dry land disposal is acceptable in most states. It is, however, the user's responsibility to determine at the time of disposal whether your product meets RCRA criteria for hazardous waste. Follow applicable federal, state, and local regulations.

14. Transport Information

Not regulated as a hazardous material by the U.S. Department of Transportation.

Not listed as a hazardous material in Canadian Transportation of Dangerous Goods (TDG) regulations.

15. Regulatory Information

TSCA

All ingredients are on the TSCA inventory or are not required to be listed on the TSCA inventory.

Chemicals listed:
Formaldehyde CAS# 50-00-0

DSL

All ingredients are listed or are not required to be listed under the Canadian Domestic Substance List.

Chemicals listed:
Formaldehyde CAS# 50-00-0

WHMIS Classification

Not a controlled product

STATE RIGHT-TO KNOW

- California Prop 65 -This product contains formaldehyde which depending on temperature and humidity may be emitted from the product. Formaldehyde is a compound that is known in the State of California to cause cancer. Teragren LLC has evaluated formaldehyde emission rates from its products (typical range of 0-0.01 ppm) and have found these rates to be below the no significant risk level that would require product warnings.

- New Jersey - Not listed

- Pennsylvania -This product contains formaldehyde which depending on temperature and humidity may be emitted from the product.

SARA 313 Information

This product contains formaldehyde at a concentration that subjects the chemical to SARA Title III Section 313 supplier notification requirements. However, the emissions characteristics and concentrations have been measure using ASTM E1333 test methods (typical average concentration of 0.015 ppm equates to a yearly emission rate of 0.01 lbs/yr). This emission rate falls well below the Threshold Planning Requirement for Formaldehyde of 500 lbs.

SARA 311/312 Hazard Category

This product has been reviewed according to the EPA "Hazard Categories" promulgated under SARA Title III Sections 311 and 312 and is considered, under applicable definitions, to meet the following categories:

- An immediate (acute) health hazard - yes - dust only

- A delayed (chronic) health hazard - no

- A fire hazard - no

- A reactivity hazard - no

- A sudden release hazard - no

16. Additional Information

Date Prepared: 07/28/03

Date Revised: 8/12/03

Prepared By: Van Fidino CIH Clayton Group Services

User's Responsibility: The information contained in this Material Safety Data Sheet is based on the experience of occupational health and safety professionals and comes from sources believed to be accurate or otherwise technically correct. It is the user's responsibility to determine if this information is suitable for their applications and to follow safety precautions as may be necessary. The user has the responsibility to make sure that this sheet is the most up-to-date issue.

Definition of Common Terms:

ACGIH = American Conference of Governmental Industrial Hygienists

C = Ceiling Limit

CAS# = Chemical Abstracts System Number

DSL = Canadian Domestic Substance List

EPA = U.S. Environmental Protection Agency

IARC = International Agency for Research on Cancer

LCLo = Lowest concentration in air resulting in death

LC50 = Concentration in air resulting in death to 50% of experimental animals

LDLo = Lowest dose resulting in death

LD50 = Administered dose resulting in death to 50% of experimental animals

MSHA = Mining Safety and Health Administration

ND = Not Determined

NAP = Not Applicable

NAV = Not Available

NIOSH = National Institute for Occupational Safety and Health

NTP = National Toxicology Program

OSHA = Occupational Safety and Health Administration

PEL = Permissible Exposure Limit

PPM = Parts of gas or vapor per million parts of air

RCRA = Resource Conservation and Recovery Act

STEL = Short-Term Exposure Limit (15 minutes)

TDG = Canadian Transportation of Dangerous Goods

TCLo = Lowest concentration in air resulting in a toxic effect

TDLo = Lowest dose resulting in a toxic effect

TLV = Threshold Limit Value

TSCA = Toxic Substance Control Act

TWA = Time-Weighted Average (8 hours)

WHMIS = Workplace Hazardous Materials Information System

07/04

Product Name
PyroBlock® MDF
Associated Specification Section
06055 - Medium Density Fiberboard
Manufacturer's Name
Panel Source International

PRODUCT DESCRIPTION

PRODUCT FEATURES

- BASIC USES / RELATED USES
  - Medium density fiberboard (MDF) that is fire retardant, moisture resistant, premium grade MDF.
  - Can be laminated or painted and used in hot or cold presses using a variety of adhesives including polyvinyl alcohol (PVA), polymeric methylene di-isocyanate (pMDI), and urea formaldehyde (UF).

- PRODUCT ATTRIBUTES AND CHARACTERISTICS
  - PyroBlock® FSC MDF contain urea-formaldehyde.
  - PyroBlock® MDF Plus and Pyroblock Platinum grade MDF is urea-formaldehyde free.
  - Treated to Class A fire retardant.
  - Moisture resistant.
  - Made from 100% recovered/recycled wood.
  - Odor free.

- SELECTION CRITERIA
  - Three products:
    - PyroBlock® Platinum Grade MDF.
    - PyroBlock® MDF Plus.
    - PyroBlock® FSC MDF .
  - Standard sizes are available - other sizes on special order.
  - Standard color is Light Beige, custom colors available on special order.
  - Can be sawn without affecting the fire rating.

- APPLICABLE STANDARDS, RELATED REFERENCES
  - ASTM D1037 - Standard Test Method for Evaluating Properties of Wood-Base Fiber and Panel Particle Material.
  - ASTM E84 - Standard Test Method for Burning Characteristics of Building Materials.
  - ANSI A208.2 - Medium Density Fiberboard (MDF) for Interior Applications.
  - CAN/ULC S102-M88 - Standard Test Method for Burning Characteristics of Building Materials.
  - Forest Stewardship Council (FSC) - Chain of Custody Certification SCS-COC-00569.
  - ULC Form 5, Issue No 1C, Number 12448 - Fire retardant chemicals used to treat PyroBlock®

- QUALITY STATEMENT, TESTS, CERTIFICATIONS, AND APPROVALS
  - PyroBlock® is supplied as an FR1S (fire retardant - one side) panel unless specified otherwise. If sanding is required, sand only back of panel marked as suitable for calibrating.
  - FSC Certified - Chain of Custody By Scientific Certification Systems Inc, SCS-COC-00569.
  - ASTM E84 is also applicable to UL723, NFPA 255, ANSI 25, UBC 42.1, and British Standard BS 476, Section 7.

PRODUCT DESCRIPTION

- Flame spread and smoke developed testing performed by Intertek Testing Laboratories (Warnock Hersey), to ASTM E84 and CAN/ULC S102.

- PACKAGING, HANDLING, PROTECTION, AND DELIVERY INSTRUCTIONS
  - Should be kept clean, dry, and well supported at all times.
  - Unaffected by freezing
  - Recommended that product be acclimatized to existing conditions 48 hours prior to installation.
  - If laminating, avoid exposing the product to sustained periods of high temperature in excess of 94 degrees C (200 degrees F).
  - Units are steel strapped with attached edge protectors. Each unit contains both a top and bottom protection cover sheet.
  - All units are tagged with unit identification including panel size, thickness, date of manufacture, and piece count.
  - Do not stack more than two units high.

- SPECIAL WARRANTY
  - Warranty:
    - Product will be free of manufacturing defects both in material and workmanship when used in accordance with manufacturer's recommendations.

- LIMITATIONS
  - PyroBlock® MDF Plus and MDF FSC are for interior use only.

- SAFETY PRECAUTIONS
  - Breathing mask and safety goggles required while cutting/sawing product to protect from air-borne particles.

- AVAILABILITY
  - Available internationally. Not all sizes and thicknesses are stocked in inventory. Consult Panel Source International for availability in your area.

- COST
  - Consult Panel Source International for specific product costs or relative costs.

PRODUCT PROPERTIES

- MATERIALS, COMPOSITION, PROPERTIES
  - Technical Properties
    - Fiber Type: 100% recovered/recycled wood.
    - Resin:

      PyroBlock® MDF FSC: Urea Formaldehyde.

      PyroBlock® Platinum Grade MDF and MDF Plus: pMDI, urea-formaldehyde free.

PRODUCT DESCRIPTION

- Grade: Premium.
- Density: 770 kg/m3 (48 lbs/ft3).
- Flame Spread: 20 Class A, to ASTM E84; 25 Class A, to CAN/ULC S102.
- Smoke Developed: 90 Class A, to ASTM E84; 100 Class A, to CAN/ULC S102.
- Internal Bond: 0.7 N/sq mm (115 psi).
- MOE: 3485 N/sq mm (505,000 psi).
- MOR: 32.4 N/sq mm (4700 psi)
- Hardness: 4500 N (1000 lb).
- Screw Hold (face): 1260 N (285 lbs).
- Screw Hold (Edge) for Thicknesses: >12.5 mm (1/2 inch): 1130 N (255 lb).
- Moisture Content: 4 - 6 %.
- Moisture Resistance: MR50.

- DIMENSIONS
  - Standard rectangular sizes are available:
    - 9.5 mm (3/8 inch) thick, 1245 x 2464 mm (49 x 97 inch) and 1549 x 2464 mm (61 x 97 inch) panels.
    - 11 mm (7/16 inch) thick, 1245 x 2464 mm (49 x 97 inch) and 1549 x 2464 mm (61 x 97 inch) panels.
    - 12.7 mm (1/2 inch) thick, 1245 x 2464 mm (49 x 97 inch), 1245 x 2769 mm (49 x 109 inch), and 1549 x 2464 mm (61 x 97 inch) panels.
    - 14.3 mm (9/16 inch) thick, 1245 x 2464 mm (49 x 97 inch) and 1549 x 2464 mm (61 x 97 inch) panels, subject to minimum orders.
    - 16 mm (5/8 inch) thick, 1245 x 2464 mm (49 x 97 inch), 1245 x 2769 mm (49 x 109 inch), and 1549 x 2464 mm (61 x 97 inch) panels.
    - 17.5 mm (11/16 inch) thick, 1245 x 2464 mm (49 x 97 inch), 1245 x 3073 mm (49 x 121 inch), and 1549 x 2464 mm (61 x 97 inch) panels.
    - 19 mm (3/4 inch) thick, 1245 x 2464 mm (49 x 97 inch), 1245 x 2769 mm (49 x 109 inch), 1245 x 3073 mm (49 x 121 inch), and 1549 x 2464 mm (61 x 97 inch) panels.
    - 25 mm (1 inch) thick, 1245 x 2464 mm (49 x 97 inch), 1549 x 2464 mm (61 x 97 inch) panels.
    - other sizes available on special order.
  - Tolerance: +0.0254 mm / -0.0000 mm (+0.010 / -0.000 inch) from nominal panel thickness.

- FINISH, COLORS AND TEXTURES
  - Standard Color: Light Beige; custom colors available on special order.

PRODUCT PLACEMENT

- INSTALLATION
  - Breathing mask and safety goggles required while cutting or sawing panels, to protect from air-borne particles.

PRODUCT DESCRIPTION

- MAINTENANCE INSTRUCTIONS AND PROCEDURES
  - PyroBlock® surface coating limits flame spread by expanding to many times its original thickness when exposed to flame to protect the panel and prevent flame spread.

Corporate Identification

Panel Source International
Suite 101, 18 Rayborn Crescent
St. Albert, Alberta, Canada T8N 5C1

Phone(s) 780-458-1007
Toll Free 877-464-7246
Fax 780-419-2345
Internet web site: www.panelsource.net
E-mail address: team@panelsource.net

Technical Services Available

Phone toll free or e-mail

Classification and Filing

MasterFormat 1995:
- Products
  - 06050 - Particleboard
  - 06055 - Medium Density Fibreboard (MDF)
  - 06060 - Wood Materials
- Applications
  - 06220 - Millwork (finish)

UniFormat 1998:
- n/a

END

Section 1 - Chemical Product and Company Identification

Product/Chemical Name: PyroBlock Fire Retardant FSC Certified MDF

Manufacturer: Panel Source International, a division of Marketing Results Inc.
Suite #101, 18 Rayborn Crescent
St. Albert, Alberta, Canada T8N5C1 Phone 780-458-1007
OR 1-877-464-7246 Fax 780-419-2345
(8:00 AM to 5:00 PM Mountain Time).

Overview

Section 2 - Composition / Information on Ingredients

Component:	Exposure Limit (OSHA)
Wood Dust / Fiber	15mg/m3 8-hr TWA 5mg/m3 15min STEL
Melamine 108-78-1	N/A
Urea-Formaldehyde Resin Solids	0.75mg/m3 TWA 2ppm STEL

Section 3 - Physical and Chemical Properties

Physical State: Solid
Appearance and Odor: light yellow, to light brown with light wood odor.
Specific Gravity: <1
pH: N/A
Solubility: N/A
Solubilities: N/A
Boiling Point: N/A
Freezing/Melting Point: N/A

Section 4 - Fire-Fighting Measures

Flash Point: N/A
Autoignition Temperature: N/A will be dependent on exposure to heat and other variables.
Extinguishing Media: Water, Carbon Dioxide, Sand
Unusual Fire and Explosion Hazards: Sawing, sanding or machining can produce wood dust as a by product which may present an explosion hazards. An airborne concentration of 40 grams or dust per cubic meter of air is often the LEL for wood dust.
Fire-Fighting Equipment: Because fire may produce toxic products, wear a self-contained breathing apparatus (SCBA) with a full facepiece operated in pressure-demand or positive-pressure mode.

Section 5 - Stability and Reactivity

Stability: Panel Source International PyroBlock FSC Certified MDF is stable at room temperature in normal storage and handling conditions.

Conditions to Avoid: Keep away from heat, sparks, and open flames.

Hazardous Decomposition Products: Thermal decomposition can produce irritating and toxic fumes, and gases.

Section 6 - Health Hazard Information

Potential Health Effects

Inhalation: Inhalation may result in respiratory irritation and coughing.

Eye: Contact with the eyes may cause irritation

Skin: Contact with the skin may cause irritation

Ingestion: Not likely to happen.

Carcinogenicity Listing: NTAP/IRC/OSHA-Formaldehyde, gaseous formaldehyde has shown to cause cancer in certain laboratory animals after long-term exposure to very high concentrations (+14ppm), far above those found in the workplace with this product.

Emergency and First Aid Procedures

Inhalation: Remove to fresh air. If irritation persists, get medical attention.

Eye Contact: Flush eyes with water for at least 15 minutes. Call a physician if irritation persists.

Skin Contact: Remove contaminated clothing and shoes. Wash exposed areas with soap and water. Call a physician if irritation persists.

Ingestion: Call a physician immediately. Only induce vomiting if directed by a physician. If vomiting occurs spontaneously, keep head below hips to prevent aspiration into the lungs. Do not give anything by mouth to an unconscious person.

After first aid, get appropriate in-plant, paramedic, or community medical support.

Section 7 - Special Precautions and Comments

Handling Precautions: Like any sawdust, avoid breathing product dust. Do not take internally. Wash thoroughly after handling this material.

Storage Requirements: Keep product unitized until use. Keep away from moisture, humidity, temperature extremes, heat, sparks, and open flames.

Prepared By: Robert F. McLeod

Revision Notes: original 6/26/03

Disclaimer: This information is furnished without warranty, expressed or implied, except that it is accurate to the best knowledge of Panel Source International. The data on this sheet relates only to the specific material designated herein. Panel Source International assumes no legal responsibility for use or reliance upon these data.

NATURAL BEAUTY *that lasts*

EON® DECKING INSTALLATION MANUAL

Welcome to Eon. The following instruction manual will assist you with the installation of your virtually maintenance free deck. **EFFECTIVE 2006**

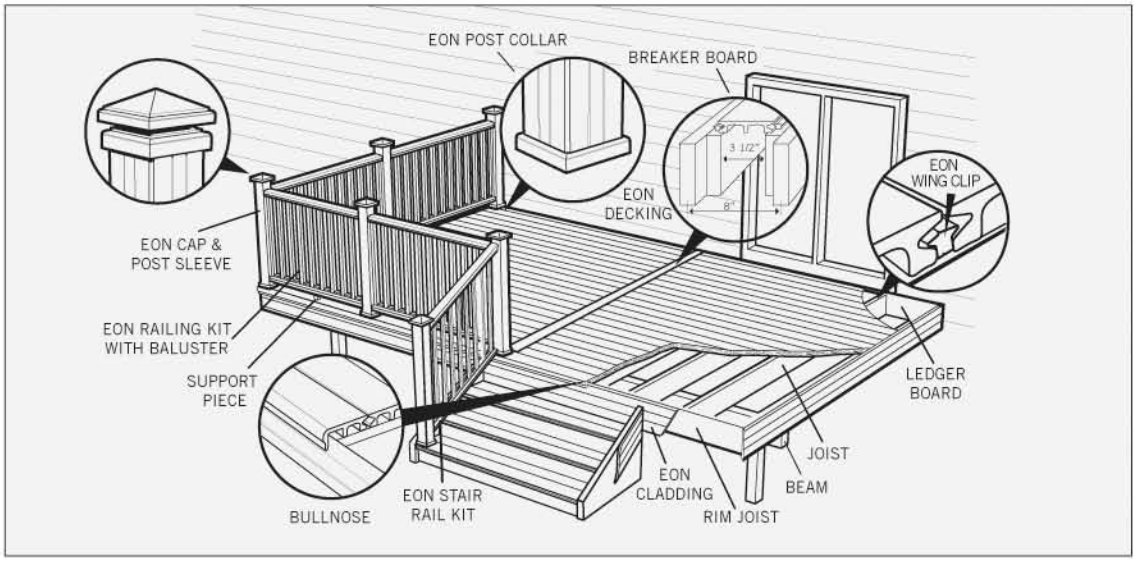

CODES & STANDARDS

- Eon decking is covered under International Code Council ICC #ESR-1300.
- Always conform to your local building codes and the requirements of all authorities having jurisdiction.

SAFETY

- Protective safety equipment is always recommended, e.g., eyewear, safety boots.

TOOLS AND HARDWARE REQUIRED

- Standard woodworking tools are recommended for Eon installations:
- Miter saw with coarse blade (24 teeth or less carbide blade recommended) or handsaw
- Measuring tape
- Drill and drill bits
- Screwdriver (Phillips or square drive)
- Rubber mallet (non-marking)
- #8 deck screws (1- 5/8", 2" and 3")
- Rotary tool with spiral bit
- Wing-clips
- #10 flathead screws (5/8") for fluted, vista glass and classical iron railing kits.

SUBSTRUCTURE

- Eon decking and railing is designed to be installed on a conventional wood substructure (pressure treated suggested).
- Eon decking meets or exceeds industry standards for 16" on center joist installation.
- **For enhanced feel and performance, Eon recommends 12" on center joist installation (straight application).**
- Joists should be installed 10" on center for angled decking.
- Lumber joists must be as level as possible before installing Eon decking to prevent friction or noise.
- Rim joist must be raised 7/8" to support any bullnose trim.
- Stair stringers should also be installed every 12" on center.
- Joist covers can be used prior to installing deckboard.
- 4" x 4" wood posts must be used and bolted to the inside of the substructure to support Eon railing system. This is done before you install the deckboard.

IF UNSURE OF ANY INSTALLATION TECHNIQUES OR HAVE ANY QUESTIONS PLEASE CONTACT CUSTOMER SERVICE AT 1 (866) 342-5366.

STOP READ THIS SECTION BEFORE YOU START!

DO read this entire installation guide before beginning installation.

DO remove the protective plastic and inspect for defects and proper color before installation (once installed color variance will not be covered under warranty).

DO use an Eon board as a breaker board for large decks or when using 20' boards (this will reduce visual effect for expansion contraction) You may want to use this for 12' and 16' boards as well.

DO ensure all joists are level to prevent friction or noise.

DO toe screw at the approximate center point of each board, pre-drill a hole through the outer lip of the free side of the board at a 45° angle into the joist (not through the top center of the board). Ensure that each board is not toe screwed more than once.

DO allow additional installation time when using the bullnose board and for persons installing Eon decking for the first time.

DO pre-drill slotted holes when using the fascia cladding or bullnose products to allow for lateral movement caused by expansion and contraction. Refer to expansion/contraction chart on page 2 to gauge hole size. Failure to pre-drill slotted holes may cause the fascia/bullnose to crack and will not be covered under warranty.

STOP READ THIS SECTION BEFORE YOU START!

DO NOT use petroleum based products on the boards i.e. solvents, suntan lotion, bug spray, bubble solution, harsh cleaners and rubber backed mats which may discolor the deck.

DO NOT butt 20' boards. If you do butt 20' boards ensure that you follow the installation guide recommendations and use a breaker board. This will avoid dissatisfaction with apparent expansion and contraction when installed incorrectly (Eon can expand up to a 1/2" total on a 20' board, if your butting 2 boards this could be a maximum of 1").

DO NOT share Wing-clips at the joist if butting boards end-to-end.

DO NOT use nails to fasten Eon. Only screws are to be used.

DO NOT use a pressure washer, only a garden hose is required with mild soap if necessary.

DO NOT toe screw at more than one point in the same board.

DO NOT use a board straightening tool to push the boards together during install. This method will result in damaging the clip and possibly result in squeaking or popping in the boards.

DO NOT over torque the Wing-clips, this could result in squeaking and could leave inconsistent spacing.

ATTENTION!!

FAILURE TO FOLLOW THESE STEPS MAY VOID YOUR WARRANTY

- Read the entire installation guide before beginning installation.
- Toe screw all boards at a 45° angle through the leg of the board in one location only. Boards should be toe screwed either in the center to force equal expansion/contraction to both ends or closer to one end (1/4 of the board length from the end) to force the expansion/contraction to the opposite end. **(REFER TO FIG. 6)**
- Refer to the chart on page 2 of the 2006 Install Guide for proper spacing for expansion and contraction.
- Use slotted holes (sized to accommodate the appropriate expansion/ contraction) when installing cladding and bullnose.
- A bottom rail support must be used between the bottom rail and the deck when installing a railing system. **(REFER TO FIG. 24)**
- Ensure enough space between the deckboard and any posts to allow for expansion/contraction. **(REFER TO FIG. 4)**
- Use breaker boards to reduce the visual impact of the expansion/ contraction spacing. **(REFER TO FIG. 16)**
- If two boards butt end to end, double joist thicknesses must be used and each board requires its own wing clip. **DO NOT SHARE WING-CLIPS. (REFER TO FIG. 12)**
- Rim joists must be raised 7/8" when using the bullnose to support the lip of the board. **(REFER TO FIG. 3)**
- Remove protective plastics and inspect boards for defects and proper colour before installation
- Eon is to be used for Residential applications only.

COLOR VARIATION

- Slight color variations may exist within your purchased set of deck boards. In a similar manner that you would install roof shingles or hardwood flooring, we recommend you randomize any slight color variation that may exist within your deck boards.

Note: Please remove protective plastic and inspect for defects and proper color before installation.

STORAGE & HANDLING

- Eon is the premium decking product on the market and should be treated as such.
- Carefully remove when unloading, do not dump.
- Do not drag decking against abrasive surfaces.
- Store with the face side up.
- Do not use petroleum based products on the boards. i.e. suntanning lotion, bug spray or rubber backed mats.

DIMENSIONS

- Deck board = 5.5"
- Wing-clip = 0.150"
- Deck board and Wing-clip combined = 5.650"

To calculate how many deck boards you will need: divide the width of your deck (in inches) by 5.650.

Note: For a simple expansion/contraction calculation please refer to our website calculator @ www.eonoutdoor.com

CALCULATING WING-CLIP REQUIREMENTS

- One bag (100 clips) for every 50 sq/ft for 12" on center.
- One bag (100 clips) for every 75 sq/ft for 16" on center.

INSTALLATION TIPS FOR EXPANSION/CONTRACTION

Because of the amount of expansion/contraction that occurs on Eon material, you must consider the following points when designing and building your deck:

- *Consider including a breaker board in your deck design, especially where longer deck boards may meet end-to-end. The addition of a breaker board would divide this space into two smaller spaces on either side of the breaker board. (refer to Fig. 16)*
- Leave proper expansion/contraction spaces at the ends of all deck boards and around any cut out notches for posts.
- Always **toe screw** each deck board or bullnose trim in the approximate middle with a single #8 x 2" deck screw. Pre-drill before installing screw. This will fix the deck board to the lumber and allow the deck board to expand equally on either end. **(REFER TO FIG. 6)**
- Fascia cladding, or bullnose trim must be installed with screws along its entire length, the **pre-drilled holes must be slotted** to accommodate expansion and contraction, especially closer to the ends of the length. The amount of contraction from the installation temperature can also be looked up from the expansion/contraction tables on the next page. **(REFER TO FIG. 13)**
- Deck board ends should lie on a full joist width. Wherever two deck boards are butted end-to-end, a double joist thickness is recommended with **separate Wing-clips** for each board. **(REFER TO FIG. 12)**
- Installing Eon decking diagonally may cause variations in gaps along cladding, breaker boards, etc., since longer diagonal deck boards expand and contract more than shorter diagonal deck boards.
- If you wish to stagger the deck board ends to achieve a random-looking pattern of deck boards, double joist thicknesses are required at each end-to-end joint. **(REFER TO FIG. 12)**

Note: The spaces between the deck board ends and fascia cladding or breaker boards may vary because of the varying deck board lengths.

UNDERSTANDING EXPANSION AND CONTRACTION

Eon deck boards, bullnose trim, and fascia cladding expand in length with rising temperatures and contract or shorten in length with falling temperatures. This expansion and contraction only occurs lengthwise not across the width.

HOW MUCH WILL YOUR EON MATERIAL EXPAND AND CONTRACT?

This depends on the length of the material and the temperature variations in your geographical area. See the chart for typical lengths of 12', 16', and 20'.

Expansion/Contraction Chart Example:
Temperature at time of installation: 70˚F
Maximum Expected Temperature: 110˚F (= 40˚ change)
Length of deck board being used: 20 feet (or 240 inches)

Looking up the expansion for a 40°F temperature range on a 20' deck board gives an expansion of 3/8" on **each end** of the deck board. Therefore you must leave a 3/8" gap between the ends of the deck boards and any fixed structure such as a post, breaker board, house structure or fascia cladding. If two 20' deck boards meet end-to-end, then you must leave a gap of twice the size (3/8" x 2 or 3/4" in this example) to allow for expansion of both deck boards.

This chart can also be used to look up the contraction of the deck board to predict the maximum gap that will occur in the coldest temperature in your geographical area.

Note: If you wish to achieve a smaller gap than estimated from the chart then shorter deck board lengths or the installation of a breaker board is recommended. Breaker boards are described on page 7. All deck boards/ bullnose trim must be toe screwed in the middle with a single screw.

Warning: Do not look up the current temperature. You must look up the expected temperature range.

Note: The charts include any difference between air temperature and board temperature due to exposure to the sun.

FAHRENHEIT EXPANSION/CONTRACTION CHART

Expected Maximum Rise in Outside Air Temperature (degrees Fahrenheit)	DECK BOARD LENGTH		
	12' DECKBOARDS	16' DECKBOARDS	20' DECKBOARDS
	Expected Expansion on Deckboard End*	Expected Expansion on Deckboard End*	Expected Expansion on Deckboard End*
+30˚F	3/16"	1/4"	5/16"
+40˚F	1/4"	5/16"	3/8"
+50˚F	1/4"	3/8"	7/16"
+60˚F	5/16"	3/8"	1/2"
+70˚F	5/16"	7/16"	9/16"
+80˚F	3/8"	1/2"	5/8"
+90˚F	3/8"	1/2"	11/16"
+100˚F	7/16"	9/16"	11/16"

CELSIUS EXPANSION/CONTRACTION CHART

Expected Maximum Rise in Outside Air Temperature (degrees Celsius)	DECK BOARD LENGTH		
	12' DECKBOARDS	16' DECKBOARDS	20' DECKBOARDS
	Expected Expansion on Deckboard End*	Expected Expansion on Deckboard End*	Expected Expansion on Deckboard End*
+10˚C	3/16"	1/4"	5/16"
+20˚C	1/4"	5/16"	3/8"
+30˚C	5/16"	3/8"	1/2"
+40˚C	5/16"	7/16"	9/16"
+50˚C	3/8"	1/2"	11/16"

**Notes: For expansion values on or near the shaded region, if deckboards will be butted end-to-end, we recommend using breaker boards in the installation and/or shorter deckboard lengths*

The values shown are the expansions that will occur equally and on BOTH ENDS of a deckboard that is toe screwed with a single deckscrew in the middle of the deckboard length. The expansion on the two ends of a deckboard will be different if the toe screw is not placed in the approximate middle of the deckboard.

BASIC INSTALLATION TECHNIQUES

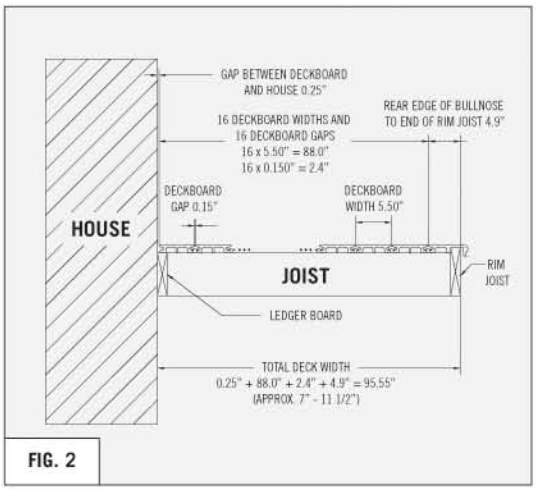

FIG. 2

BUILD SUBSTRUCTURE

- Eon decking and railing should be installed on a conventional wood substructure (pressure treated lumber is recommended). In order to accommodate Eon decking and railings, the lumber substructure should be built with these additional features:
- Joist spacing recommended at 12" on center. Warranty also covers 16" O.C.
- Joists must be as level as possible to one another.
- Frequent bracing between joists recommended: approximately every 6'.

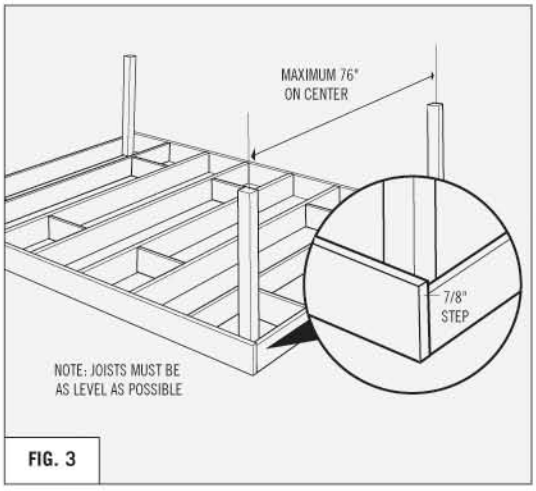

FIG. 3

- Any rim joists or other joists that will support the bullnose trim piece along its length must be raised up by 7/8" higher. The bullnose trim must rest on this 7/8" step. **(REFER TO FIG. 3)**
- Bolt the 4" x 4" posts to the inside of the sub-structure prior to installing the deckboard.
- Stair stringers must also have an additional support lumber raised 7/8" from the stringer step to support the bullnose.
- Use **Fig. 2** and the example calculations to estimate your deck width to fit an even number of deck boards. This example shows a calculation for an 8' deck. This calculation should only be used as a guideline to build your deck substructure, as slight variations in installation (and deck board gaps) may cause the predicted measurement to be slightly off the actual installation.
- Deck board width: 5.5"
- Gap between deck boards: 0.15"
- Bullnose width to lumber edge: 4.91"

Note: If other features are included in your deck, such as breaker boards, deck boards butting end-to-end, or bullnose trim along all sides of the deck, the lumber substructure will need some minor additions.

Note: Please visit our website www.eonoutdoor.com for more information on diagonal and picture framing installation.

INSTALL BULLNOSE TRIM

Note: To minimize complications from bullnose contraction, avoid wrapping bullnose around post whenever possible. Plan to locate ends of bullnose trim at the post. ***(REFER TO FIG. 4)***

- Cut bullnose trim to required length. Refer to expansion/contraction section to determine the gap required for your particular installation. Cut out notches in the bullnose trim to fit any 4" x 4" posts, leaving a 3/8" gap on both sides of the posts for expansion and contraction. Wherever possible, avoid placing cut out notches near the end of a long bullnose trim piece by placing end-to-end butt joints at the post. **(REFER TO FIG. 4)**

- Place the bullnose onto the substructure with the middle leg against the inside of the rim joist. **(REFER TO FIG. 5)**
- Pre-drill a hole through the exposed foot of the bullnose trim at the center point of the board at a 45° angle into the joist. Toe screw the bullnose trim to the joist with a 2" deck screw. Install Wing-clips on all remaining joists with the white line facing away from the bullnose. **(REFER TO FIG. 6)**

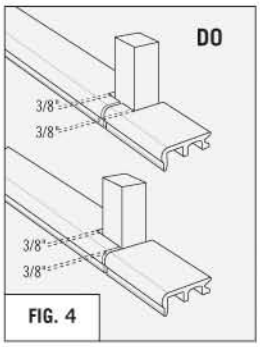

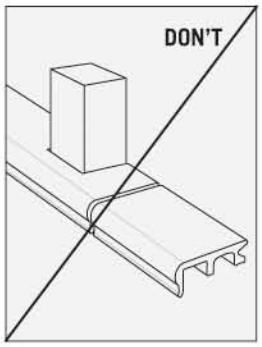

FIG. 4

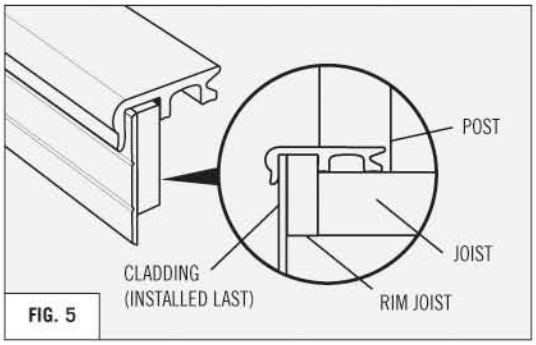

FIG. 5

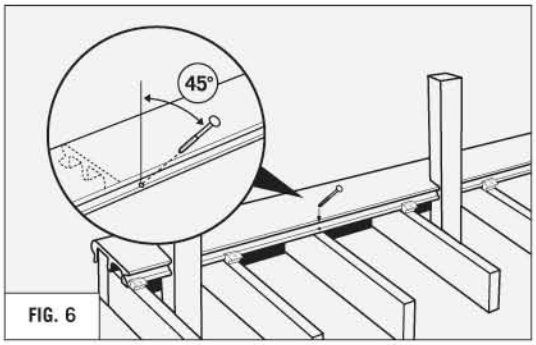

FIG. 6

CUTTING AND DRILLING EON

Cutting and drilling Eon is different from cutting wood. Standard woodworking tools are recommended, but in order to avoid melting the plastic during cutting, drilling, etc., we recommend the following as a starting point:

- Table saws, circular saws, and miter saws should be equipped with carbide blades with coarse teeth: 24 teeth or less. Make sure saw comes to full speed before you start cutting. All cuts should be made quickly, rather than slowly. As a rough guideline, a miter saw can cleanly cut through a deck board in less than one second.
- Wax or cooking spray can be used on the blade for a clean cut.
- Jigsaws can be used with Eon, but coarse blades and slower blade speeds are recommended as a starting point. A jigsaw that is equipped with an orbital cutting action may reduce heat buildup that causes melting.
- Drilling should be done at slower RPM speeds to prevent melting. Forstner bits work well for large holes.
- Slotted holes are often required for Eon to allow for expansion and contraction, especially on the fascia cladding or the bullnose trim.
- A rotary tool with a spiral bit is easier and faster at slotting holes than using a drill with a standard drill bit.
- Eon can be filed by hand if required. Power sanders (belt or random orbital) will melt the material.
- Wood chisels can be used with Eon material.

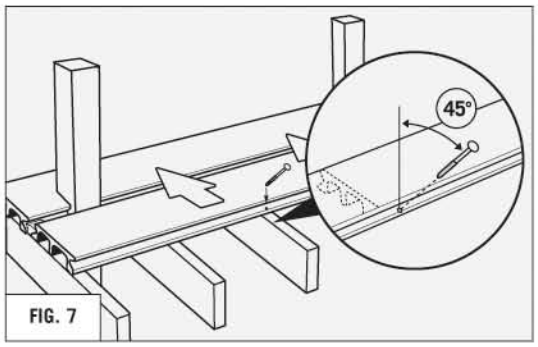

FIG. 7

INSTALL DECK BOARDS

- Cut a deck board to required length and lay the deck board behind the bullnose against the existing row of Wing-clips. Refer to the expansion/contraction section to determine the proper gap required for your installation.

  Note: Cut all deck boards at the same temperature to ensure a consistent gap.

- Attach or toe screw the deck board to the lumber substructure with a single #8 x 2" deck screw in the approximate middle of the board. Pre-drill into the deck board's lower lip at a 45° angle prior to installing screw. **(REFER TO FIG. 7)**
- Do not use excessive force to push deck board into existing row of Wing-clips. Hand or leg force (or rubber mallet) is recommended. The use of board bending tools or "Bowrench" are not recommended as this may cause too much friction as they can easily apply excessive sideways force on the deck board. **(REFER TO FIG. 8)**
- Install Wing-clips on all remaining joists. All Wing-clips should be installed with the white line on the Wing-clips facing away from the deck board. Installing a Wing-clip on the toe screwed joist is optional. **(REFER TO FIG. 9)**
- Repeat as required. **(REFER TO FIG. 10)**

INSTALL LAST DECK BOARD

- Insert edge of last deck board under remaining row of Wing-clips.
- Pre-drill and screw deck board into lumber from top surface. Attach the deck board with screws spaced 36" apart. To avoid complications from expansion/contraction slot all holes, except the center hole. **(REFER TO FIG. 11)**

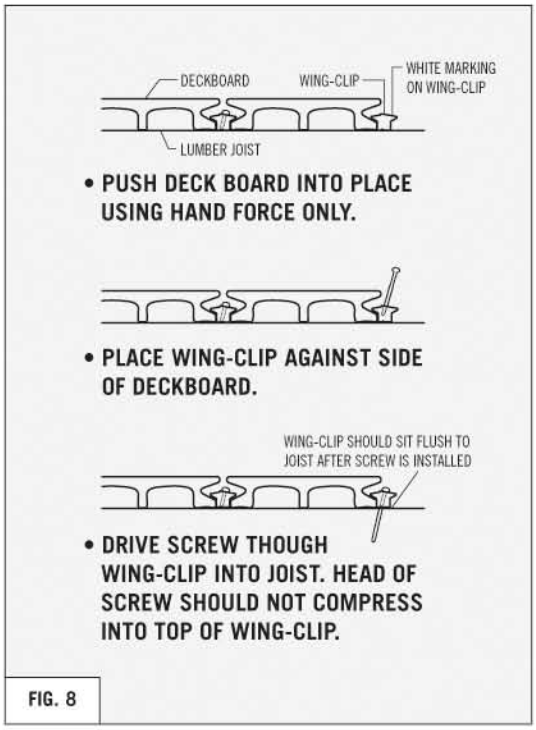

FIG. 8

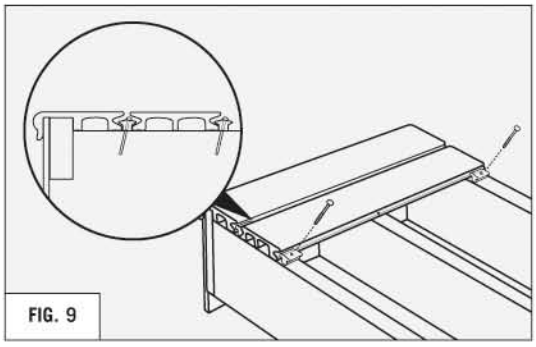
FIG. 9

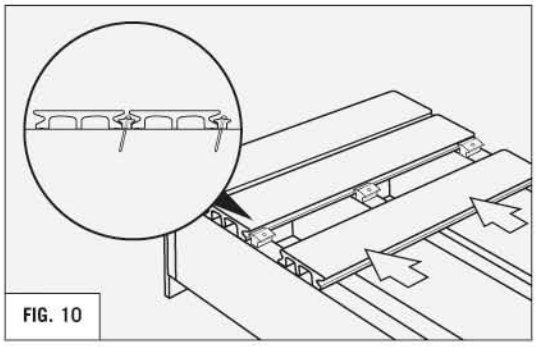
FIG. 10

WING-CLIP INSTALLATION TIPS

- The wing-clip screw should be tightened only enough to fully seat the wing-clip onto the lumber joist. The head of the wing-clip screw should not compress into the top of the wing-clip, but should simply hold the wing-clip down onto the lumber joist.
- If using a cordless drill with a clutch, set the clutch to a low torque setting that will not deform the wing-clip upon tightening of the screw. Overtightening the wing-clip screw may prevent full insertion of the next deckboard, leaving a slightly larger gap between deck-boards.
- In certain instances where individual joists are low, leaving a gap between the underside of the deckboard and the joist, we recommend standing on the deckboard to press the deckboard flush against the joist while installing the wing-clip. In extreme cases, shims may be recommended to level the joists before installing the wing-clip.

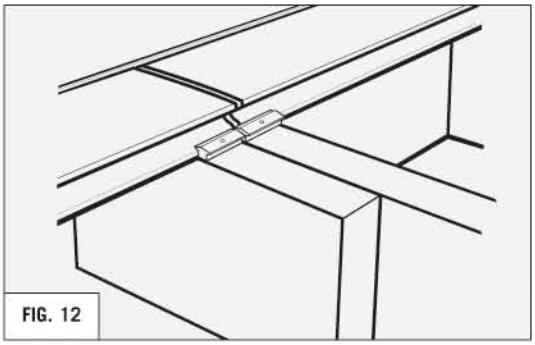

FIG. 12

Note: The final deck board may need to be ripped along its length in order to fit in the remaining space. If the entire leg is removed, install a strip of lumber onto the joist to support the deck board.

Note: If installing two boards end-to-end, double joists are required and separate Wing-clips are required for each board. ***(REFER TO FIG. 12)***

INSTALL FASCIA CLADDING

- Fascia cladding can be used to cover the rim joist and the sides of the deck. If bullnose trim is installed, the cladding is inserted under the lip of the bullnose trim. **(REFER TO FIG. 5)**
- Cut fascia cladding to length, leaving proper gap for expansion and contraction as required.
- Pre-drill holes in the **two grooves** of the fascia cladding, spaced 18" apart. If the cladding is used under the bullnose lip, the holes may be spaced as wide as 36" apart. **(REFER TO FIG. 13)**
- Using a rotary tool with a spiral bit, enlarge the pre-drilled holes into slots, leaving the two holes in the center of the cladding unslotted. Be sure to cut generous slot lengths especially near the

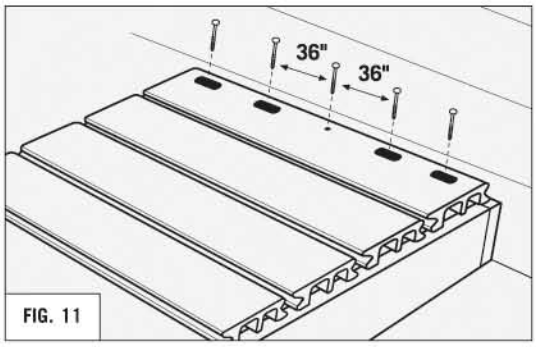

FIG. 11

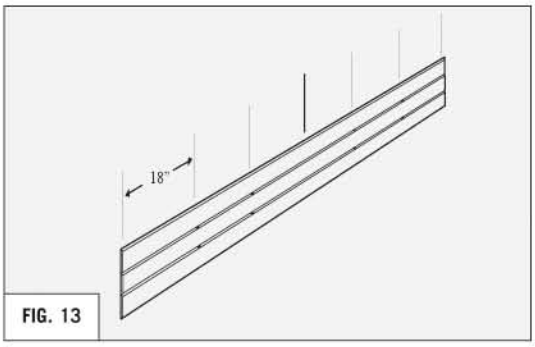

FIG. 13

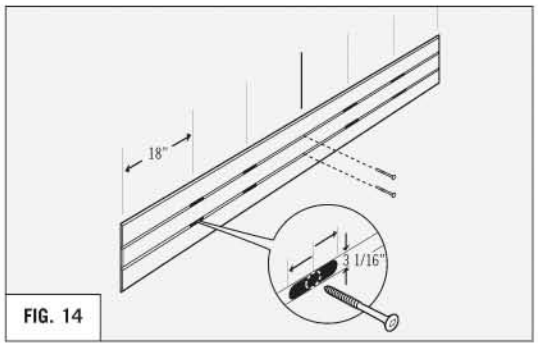

FIG. 14

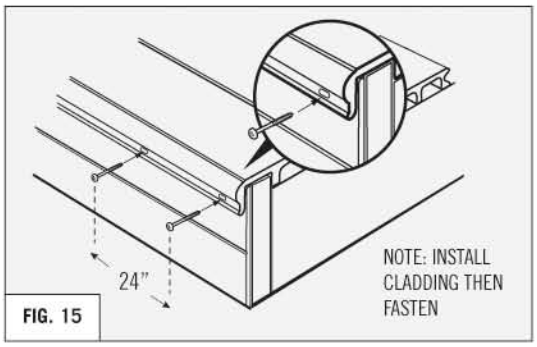

FIG. 15

ends of the cladding to avoid complications from contraction and expansion. Cutting slots of insufficient length may result in complications such as buckling of the cladding or breakage of screws. If necessary, use the expansion/contraction charts to look up the predicted expansion and contraction of your fascia cladding. **(REFER TO FIG 14)**

- Install cladding onto deck with #8 deck screws (minimum 1 - 5/8" long). Begin with the unslotted screws in the center of the cladding. Be sure to install the screws in the middle of the slots to allow for expansion and contraction. Do not over tighten screws. The screws should lightly hold the cladding against the lumber and allow free expansion and contraction of the cladding.
- The cladding should contact the underside of the bullnose if installed under the bullnose. If the cladding is installed to cover the ends of the deck boards, then the cladding can be raised to the top surface of the deck boards.
- If two pieces of cladding are installed end-to-end, then a proper expansion gap must be left between the two pieces.
- Ends can be mitre cut for a cleaner appearance.

ATTACH BULLNOSE TRIM TO RIM JOIST

- Pre-drill holes every 24" into the lower lip of the bullnose and through the fascia cladding. Using a rotary tool with a spiral bit, enlarge all pre-drilled holes in the bullnose lip, into slots to allow for expansion and contraction, especially near the ends of the bullnose length. If necessary, use the expansion/contraction charts to look up the predicted expansion and contraction.
- Drive #8 x 2" deck screws into the bullnose lip. Tighten screws just until the head of the screw contacts the bullnose lip, and before the screw pulls the bullnose lip towards the joist. **(REFER TO FIG. 15)**

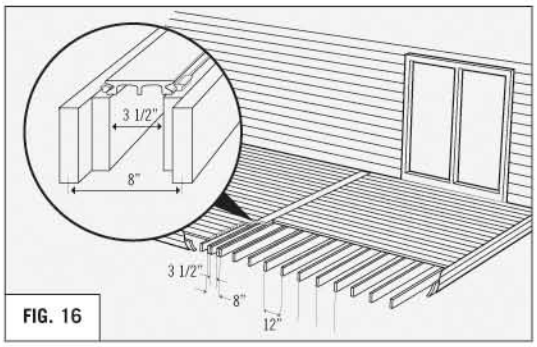

FIG. 16

BREAKER BOARD INSTALLATION

- A breaker board is a single Eon deck board that runs perpendicular to the rest of the decking on both sides of the breaker board. **(REFER TO FIG. 16)**
- A breaker board is recommended when the expected gap between two deck boards installed end-to-end will be large. This large gap will occur more often in larger decks where long lengths of deck boards butt end-to-end.

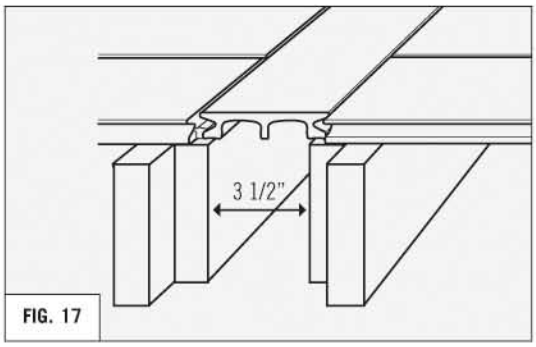

FIG. 17

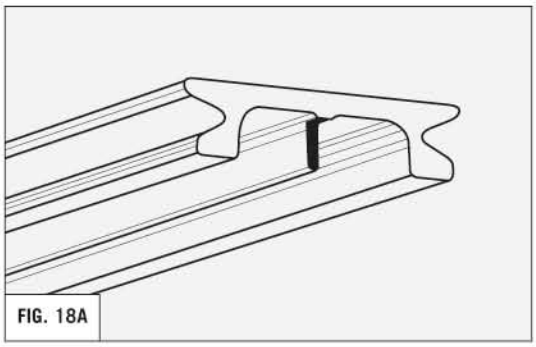
FIG. 18A

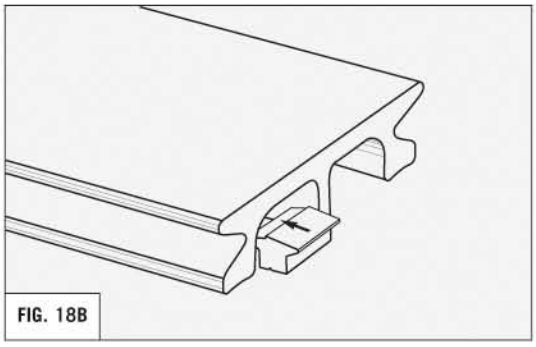
FIG. 18B

- For example, if a 40' long deck uses 20' deck boards that are installed end-to-end, both boards will contract in colder temperatures which may leave a large gap. By installing a breaker board in between these two deck boards, the large gap will be divided into two smaller gaps on both sides of the breaker board.
- Install two double joist thicknesses, spaced 3 1/2" apart, to support the breaker board and the ends of the deck boards.

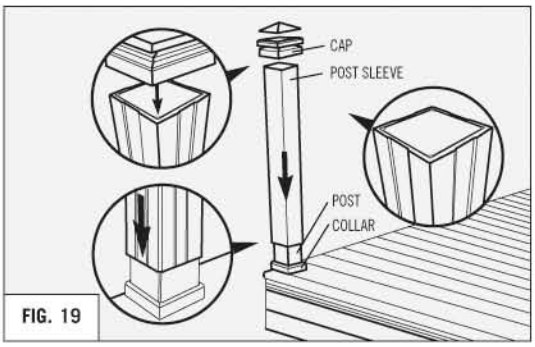

FIG. 19

- Install breaker board first, with Wing-clips on both sides. Toe screw the breaker board in the middle with a single screw.
- Install perpendicular decking next. Toe screw each board in the middle with a single screw. To achieve the smallest possible gaps with the breaker board, the center leg on the ends of the perpendicular deck boards can be removed with a handsaw and chisel to slide over the Wing-clip. Remove a maximum of 1" of the center leg from the end of the deck board. **(REFER TO FIG. 17 & 18A)**. As an alternative, the Wing-clip can be trimmed down to fit between the foot and the center leg of the board. **(REFER TO FIG. 18B)**

INSTALLING POST SLEEVE (4.2" X 4.2" X 4') COLLAR AND CAP

- Slide post collar over 4" x 4" post and settle flush to deck-boards.
- The Eon post sleeve is designed to simply slide over an existing 4" x 4" wood post. **(REFER TO FIG. 19)**
- The sleeve is secured once the Eon railing is attached.
- Trim Post Sleeve to determined height.

*Eon recommends trimming down the Post Sleeve **AFTER** the railings are fully installed. However, if you are sure of the final installed height of the railings and the desired post height, the post sleeve can be trimmed prior to installing the railing.*

Note: Check post sleeves against 4" x 4"s. You may need to trim 2 corners of post if too large.

Note: Remember to leave a gap for expansion/contraction of deck boards around the posts. See expansion/contraction charts on pg. 2 for proper spacing between deck board and post.

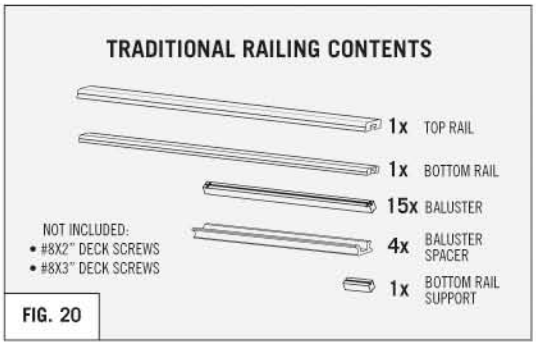

FIG. 20

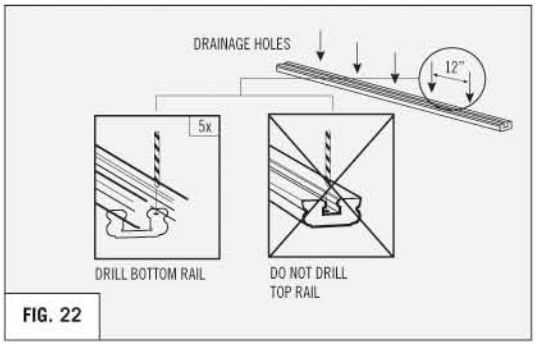

FIG. 22

INSTALL RAILING

Install Eon railing systems after all deck boards and bullnose trim are in place.

TRADITIONAL RAILING

1. Begin by measuring the distance between the post sleeves and cut top and bottom handrail accordingly. **(REFER TO FIG. 21)**

Spacers length will vary for rail length and baluster spacing. Consult local building code.

2. Drill 1/4" drainage holes every 12" in the bottom rail. **(REFER TO FIG. 22)**

3. Cut Bottom Rail Support to length and attach to center of bottom rail through the center drainage hole **(REFER TO FIG. 23)** with a #8x2" deckscrew. Pre-drill the support with a 1/8" bit before attaching to rail. Consult local building codes for recommended support length.

Pre-drill support with 1/8" bit and use #8 x 2" deck screw to attach support to centre of rail.

4. Cut spacers to meet local building codes **(REFER TO FIG. 24)**

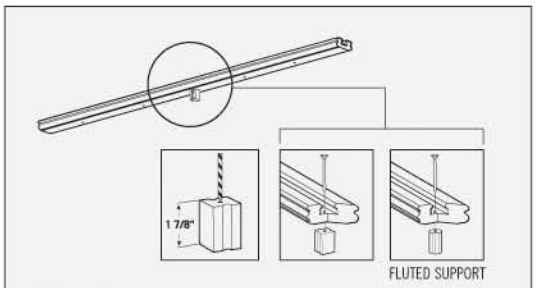

FIG. 23

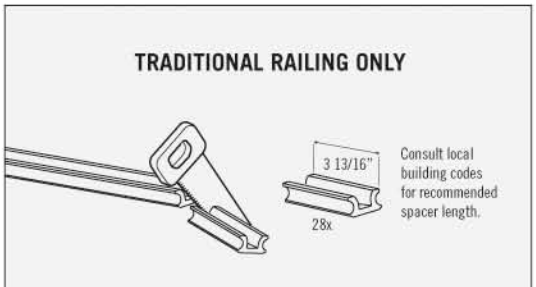

FIG. 24

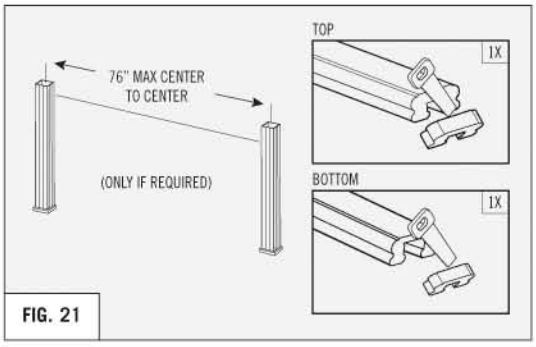

FIG. 21

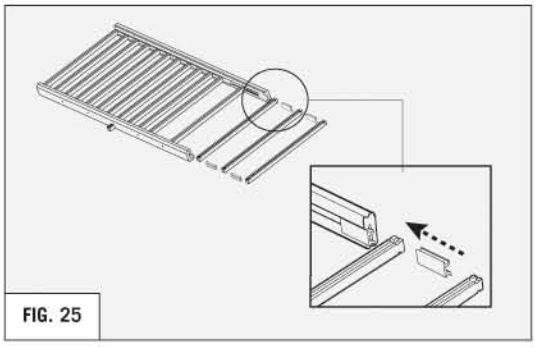
FIG. 25

5. Assemble by sliding a baluster followed by a spacer down each rail. **(REFER TO FIG. 25)**

First and last balusters must be flush with the ends of the rails.

6. Place the railing between the posts. **(REFER TO FIG. 26)**

7. Pre-drill pilot holes. Attach end balusters to posts using three #8 x 3" screws on each post. **(REFER TO FIG. 27)**

8. Pre-drill pilot holes at a 45° angle starting 1" from end of rail. Start drilling straight into the rail, then turn at a 45° angle. Attach top and bottom rails to posts using #8 x 3" screws. **(REFER TO FIG. 28)**

Pre-drill before installing screws (3/16" hole).

9. Trim down post sleeve height if required and install post caps. Using a #8 x 3" screw attach post cap base to the lumber post then snap on post cap.

HINT: DO NOT over tighten screw.

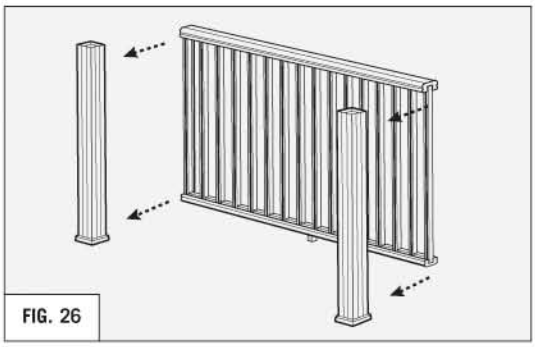

FIG. 26

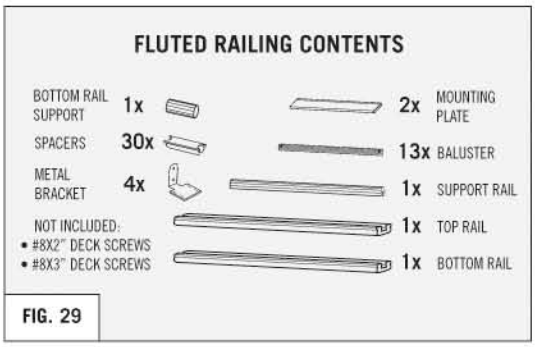

FIG. 29

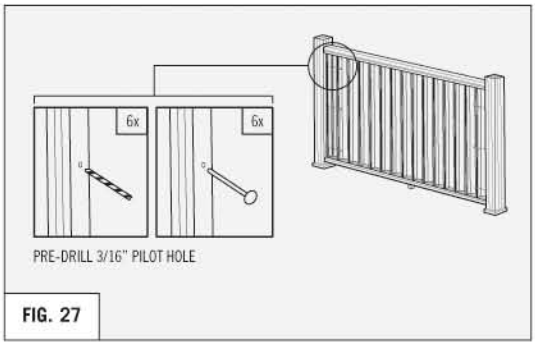

FIG. 27

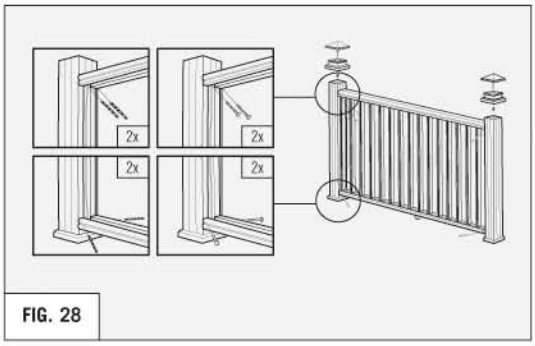

FIG. 28

FLUTED RAILING

FOLLOW STEPS 1-3 OF THE TRADITIONAL RAILING.

Note: Cut support rail 1" shorter than top rail.

4. Assemble railing by sliding the support rail into the top rail than slide the balusters into rail support and bottom rail. **(REFER TO FIG. 30)**

5. Install metal brackets and mounting plates using a rubber mallet. **(REFER TO FIG. 31)**

Where any railings meet at a 45° or 90° corner on a deck the mounting plate must be attached to the top rail with a screw. It is not required where several railings are in a straight line and do not form a corner. Attach each metal bracket to both ends of the top rail with a single flat head #10x5/8 wood screw. Do not use longer screws, as it will pierce through the top rail surface. This step is not required for the bottom rail. ***(REFER TO FIGURE 32)***

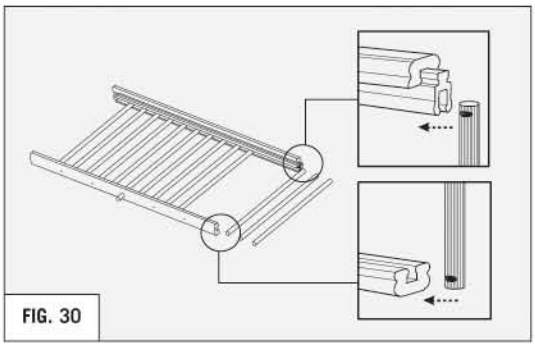
FIG. 30

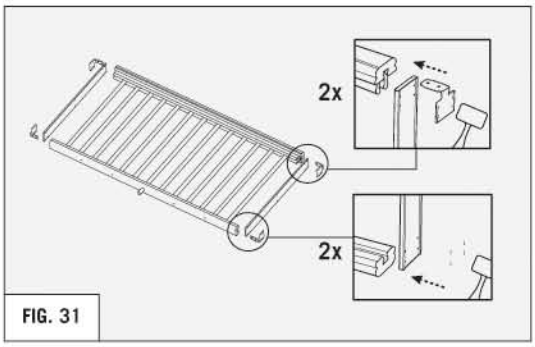

FIG. 31

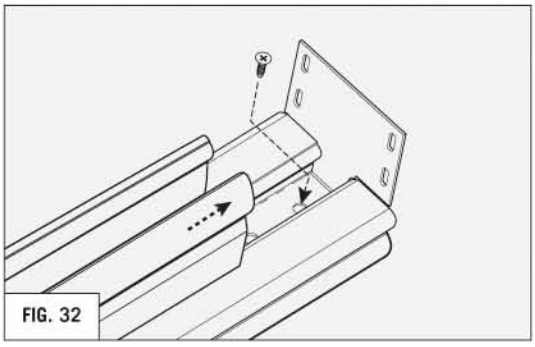
FIG. 32

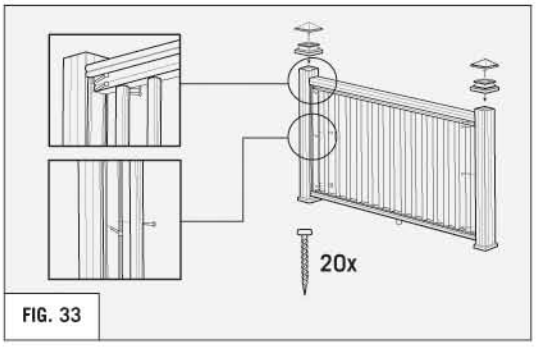

FIG. 33

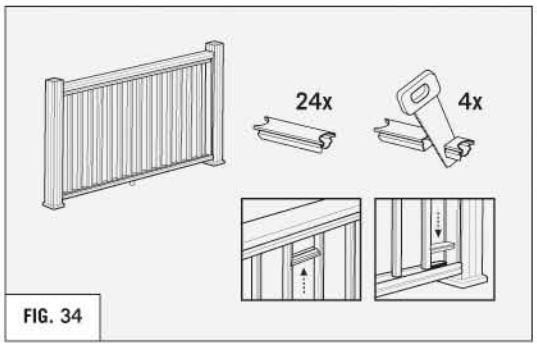

FIG. 34

6. Place railing assembly between posts. Attach mounting plate and rails using #8 x 3" screws. **(REFER TO FIG. 33)**

7. Install baluster spacers. **(REFER TO FIG. 34)**

HINT: Trim the four end baluster spacers to same length to create equal space between posts and balusters.

8. Trim down post sleeve height if required and install post caps. Using a #8 x 3" screw attach post cap base to the lumber post then snap on post cap.

HINT: DO NOT over tighten screw.

CLASSICAL IRON RAILING

FOLLOW STEPS 1-3 OF THE TRADITIONAL RAILING.

Note: Cut support rail 1" shorter than top rail.

4. Slide support rail into top rail. **(REFER TO FIG. 36)**

5. Trim both spacers to the same length as the support rail. **(REFER TO FIG. 37)**

6. Slide balusters into spacers. **(REFER TO FIG. 38)**

Note: The spacer will fit balusters a maximum 3/4" O.D.

7. Install rails into balusters. **(REFER TO FIG. 39)**

HINT: Use rope or bungee cords to temporarily hold assembly in place.

8. Install metal brackets and mounting plates using a rubber mallet. **(REFER TO FIG. 40)**

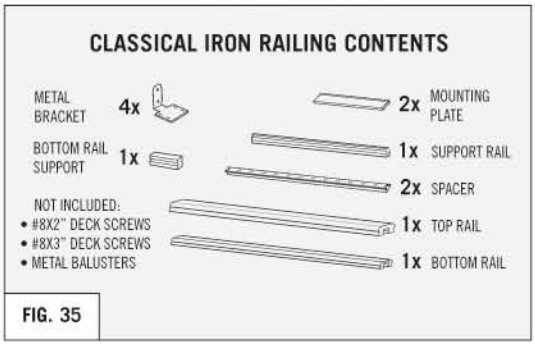

FIG. 35

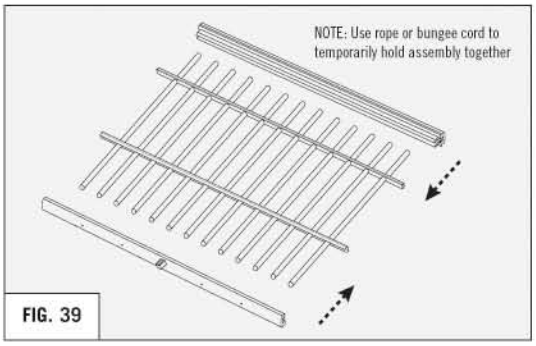

FIG. 39

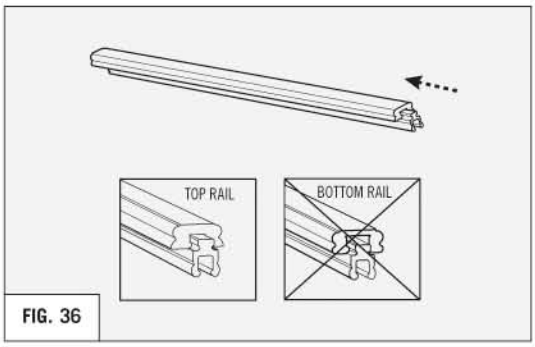

FIG. 36

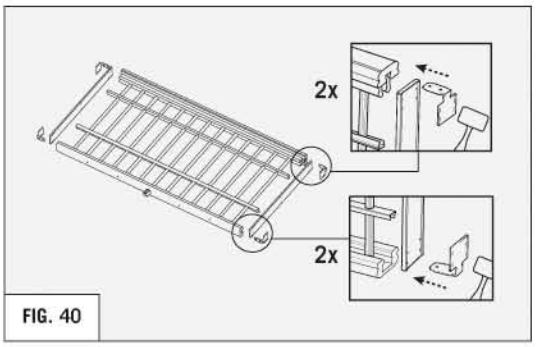

FIG. 40

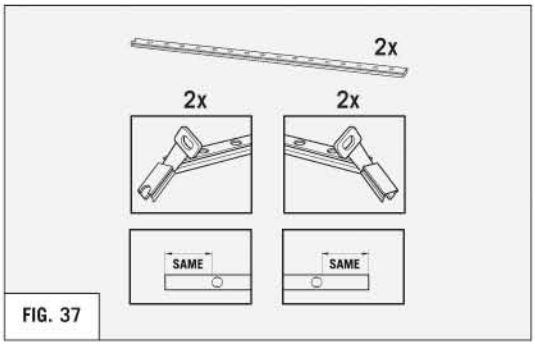

FIG. 37

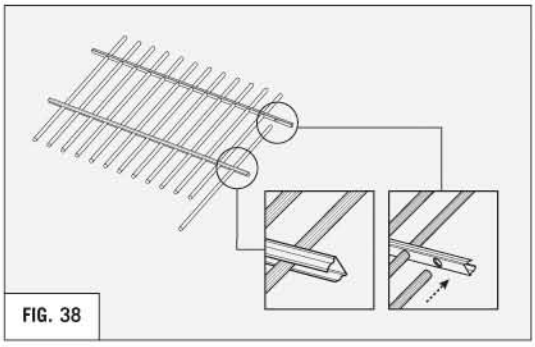

FIG. 38

Where any railings meet at a 45° or 90° corner on a deck the mounting plate must be attached to the top rail with a screw. It is not required where several railings are in a straight line and do not form a corner. Attach each metal bracket to both ends of the top rail with a single flat head #10x5/8 wood screw. Do not use longer screws, as it will pierce through the top rail surface. This step is not required for the bottom rail. ***(REFER TO FIGURE 32)***

9. Place railing assembly between posts. Attach mounting plate and rails using #8 x 3" screws. Then slide the spacers down and snap them into the rails. **(REFER TO FIG. 41)**

10. Trim down post sleeve height if required and install post caps. Using a #8 x 3" screw attach post cap base to the lumber post then snap on post cap.

HINT: DO NOT over tighten screw.

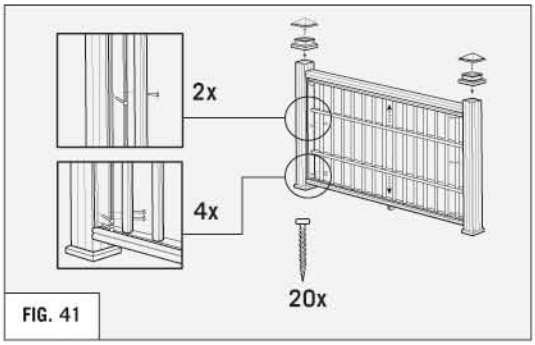

FIG. 41

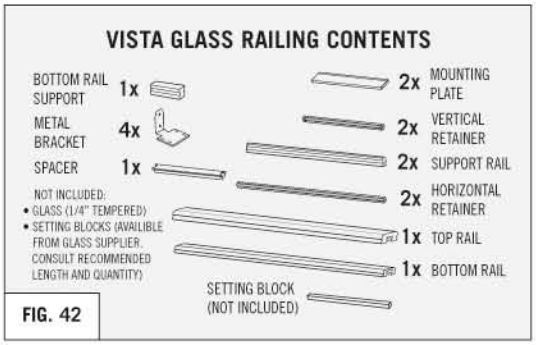

FIG. 42

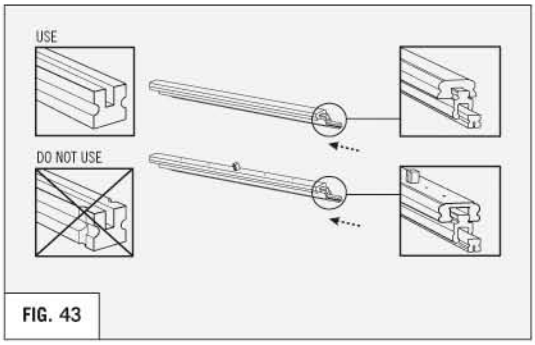

FIG. 43

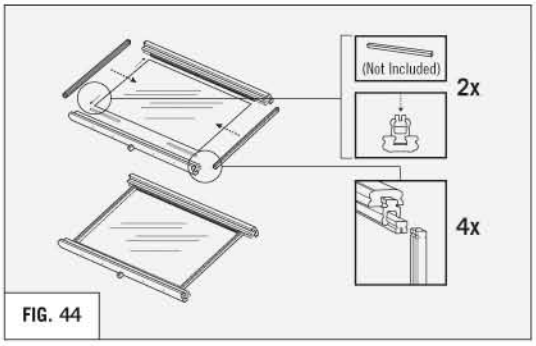

FIG. 44

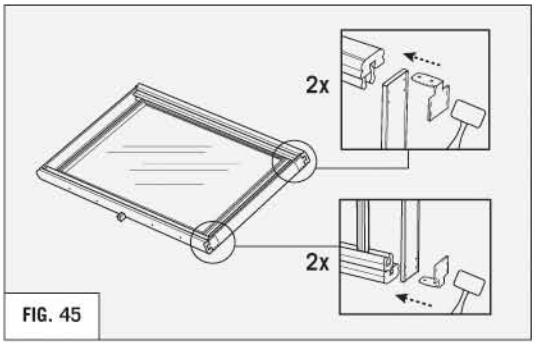

FIG. 45

VISTA GLASS RAILING

Note: Vista glass rail kit is designed to accommodate a maximum glass panel size of 32.5" h x 62" l.

FOLLOW STEPS 1-3 OF THE TRADITIONAL RAILING.

Note: Cut support rail 1" shorter than top rail. Cut horizontal retainer 1" shorter than glass panel.

4. Slide support rails and horizontal retainers into top and bottom rails. **(REFER TO FIG. 43)**

5. Insert rubber setting blocks (not included). **(REFER TO FIG. 44)**

6. Insert glass panel into horizontal retainers. **(REFER TO FIG. 44)**

7. Slide vertical retainers on either side of glass panel. **(REFER TO FIG. 44)**

8. Attach metal brackets and mounting plates. **(REFER TO FIG. 45)**

Where any railings meet at a 45° or 90° corner on a deck the mounting plate must be attached to the top rail with a screw. It is not required where several railings are in a straight line and do not form a corner. Attach each metal bracket to both ends of the top rail with a single flat head #10x5/8 wood screw. Do not use longer screws, as it will pierce through the top rail surface. This step is not required for the bottom rail. ***(REFER TO FIGURE 32)***

9. Place railing assembly between posts. Attach mounting plate and rails using #8 x 3" screws. **(REFER TO FIG. 46)**

10. Cut and install spacers . **(REFER TO FIG. 47)**

11. Install post caps. Using a #8 x 3" screw, attach post cap base then snap on post cap.

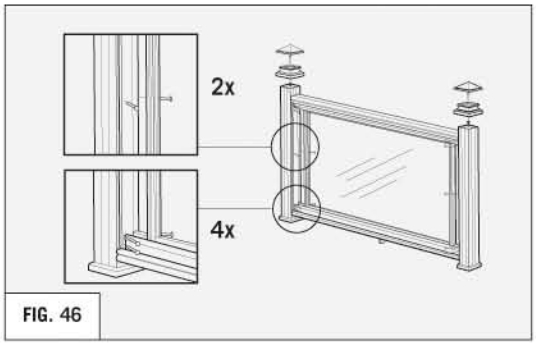

FIG. 46

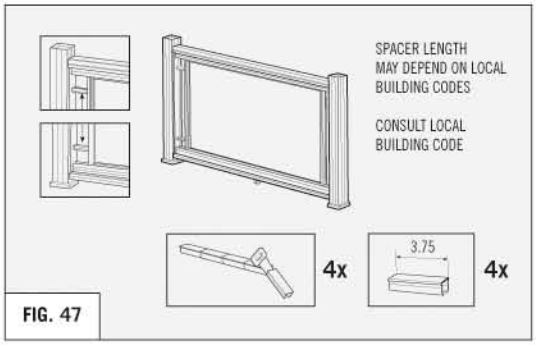

FIG. 47

CURVED RAILING

- Each curved rail kit creates a 45° curve. Use two railing kits to create a 90° corner.
- The distance from the center point to the outer radius should measure 60" (inner radius 56"). The distance between the center point of post-A to the center point of post-B should be 44 1/2". **(REFER TO FIG. 48)**

Note: Please refer to the traditional railing instructions for more details if required.

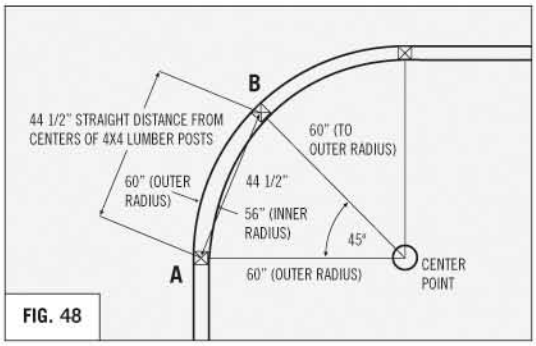

FIG. 48

1. Drainage holes (1/4") should be drilled every 12" in each bottom rail. Ensure that one drainage hole is drilled in the center of each bottom rail.

2. The spacer included with the railing should be cut to meet local building codes.

3. Attach a spacer to support the bottom rail through the drain hole.

4. Once the railing and spacers have been cut accordingly, begin assembling the railing section like a ladder, by sliding a baluster followed by a piece of spacer down each rail. Complete the process making sure a baluster is flush with the end of each handrail section. **(REFER TO FIG. 25 & 26)**

5. Pre-drill 3/16" pilot holes into the ends of the top and bottom rails as in the Traditional Railing installation. The pilot holes should be drilled at a 45° angle to the rail and should start 1" from the end of the rails. Predrill three pilot holes into the first and last baluster that lie against the posts. **(REFER TO FIG. 27 & 28)**

INSTALLING STAIRS

- Install stair stringers directly onto the lumber rim joist, and not onto the fascia cladding.
- In addition to the lumber stringers, Eon stairs will require an additional support lumber (2" x 6" or 2" x 8") on every step height of the stringer.
- Recommended stringer spacing is 12" on center.
- Recommended step length (run): 11 1/4" (which fits one full deck board plus bullnose).
- Consult local building code for recommended step height. Example below shows a 6 5/8" step height, which uses a full 2" x 8" support lumber.

STRINGER CONSTRUCTION

Note: Top step length is reduced from 11 1/4" to 10" to accommodate the thickness of the deck's rim joist. The height of the bottom step is reduced by the deck board thickness (1 1/4") to make the height of the bottom step from ground the same as the step heights on the stairs. Consult local building code for recommended step height.

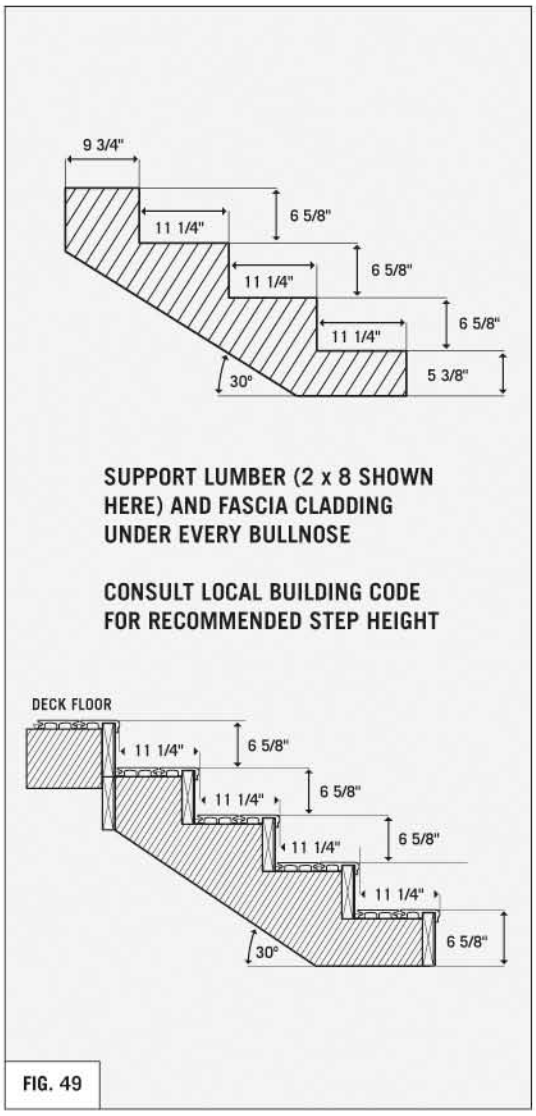

FIG. 49

INSTALL LUMBER STRINGER

- Install stringer directly to rim joist of deck and not to the fascia cladding. Attach support lumber (2" x 6" or 2" x 8") to stringers with #8 deck screws. Top edge of the support lumber must extend 7/8" above stringer to support the bullnose. **(REFER TO FIG. 50)**

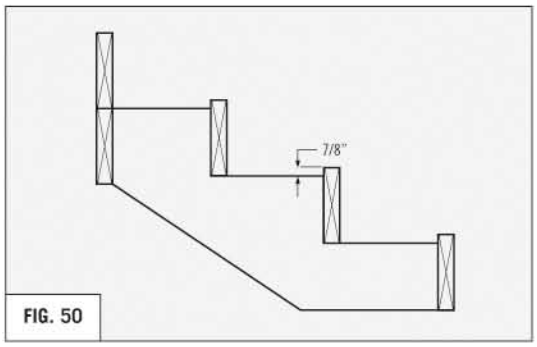

FIG. 50

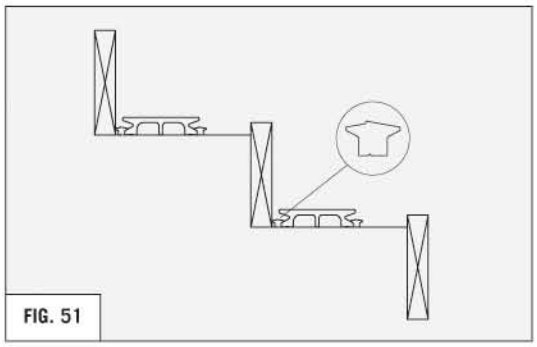

FIG. 51

INSTALL WING-CLIP AGAINST LUMBER

- Install Wing-clip directly against lumber. **(REFER TO FIG. 51)**

INSTALL DECK BOARD AND SECOND WING-CLIP

- Push deck board against first row of Wing-clips and install next row of Wing-clips. Use single #8 x 2" deck screw to toe screw deck board to middle stringer. **(REFER TO FIG. 51)**

INSTALL FASCIA CLADDING

- Trim the fascia cladding width to extend from top of support lumber to top of Wing-clip. The top edge of the cladding must not extend above the support lumber.
- Pre-drill three holes near the top edge of the cladding as shown. **(REFER TO FIG. 52)**
- Attach cladding to the support lumber with three #8 x 1 - 5/8" deck screws along the top edge. These screws will be hidden after the bullnose is installed. Use only 1 - 5/8" screws or shorter to prevent the screws from coming out the other side of the support lumber and interfering with the bullnose. **(REFER TO FIG. 53)**

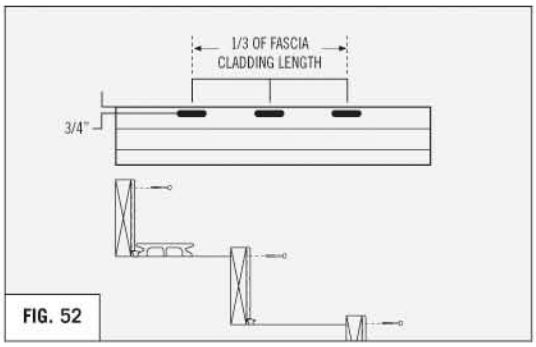

FIG. 52

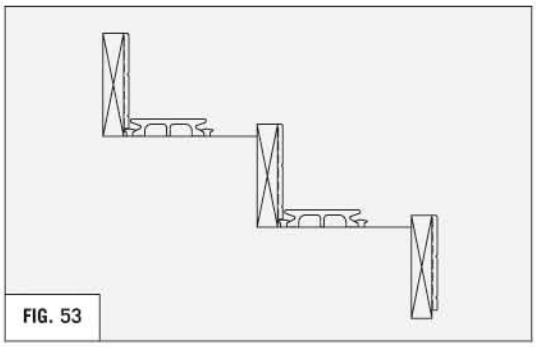
FIG. 53

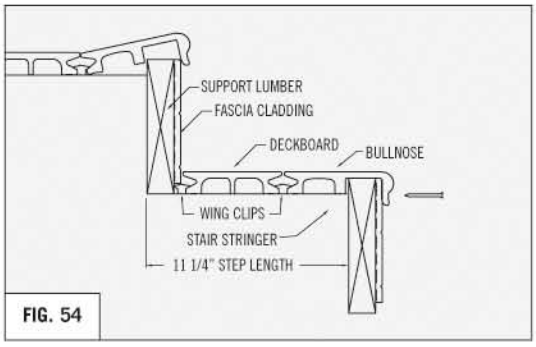

FIG. 54

INSTALL BULLNOSE STAIR BOARD

- Cut bullnose to length and fit under last row of Wing-clips. Snap bullnose into place over support lumber and fascia cladding. **(REFER TO FIG. 54)**
- Pre-drill holes every 24" into the lower lip of the bullnose and through the fascia cladding. Slot all holes in the bullnose lip to allow for expansion and contraction. **(REFER TO FIG 54)**

COVERING STAIR TREAD ENDS

- In some instances, the ends of the stair tread can be covered with Eon fascia cladding to achieve an attractive finished look or to meet building code requirements for stairs.
- A full width of Eon fascia cladding can be attached to the stair stringers to cover the open triangular space created by the step width and height. To achieve the same appearance on both sides of the stringer cladding, two pieces of cladding, placed back-to-back, can be attached to the stringer. Alternatively, a solid lumber stringer can be attached to the stringer, and be covered with the fascia cladding. Trimming an extra width of cladding may be required to achieve full coverage of the stringer width. Slot all holes before attaching with #8 deck screws. **(REFER TO FIG. 55)**
- Cladding can also be cut into short lengths and installed horizontally or vertically to match the stringer outline. Consult local building codes for allowable spaces under stair railings. **(REFER TO FIG. 56)**

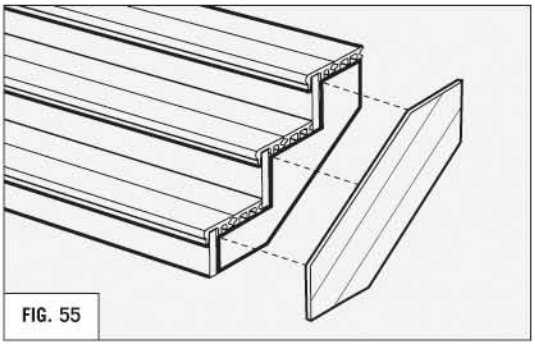
FIG. 55

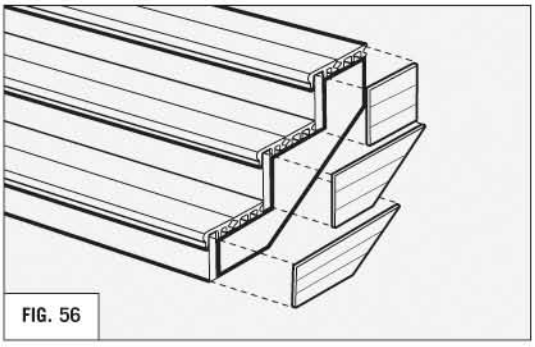
FIG. 56

STAIR RAIL INSTALLATION

Traditional, Fluted, Classical Iron, and Vista Glass

- The installation of an Eon Stair Rail is similar to the installation of the railing kits. Follow the same procedure as the railing installation with the following exceptions:

ALL STAIR RAIL STYLES (TRADITIONAL/ FLUTED/ CLASSICAL IRON/ VISTA GLASS)

- Before assembling your stair rail, attach the graspable handrail to the top handrail first with 1-5/8" or 2" screws. Pre-drill pilot holes in both the handrail and graspable handrail. **(REFER TO FIG. 57)**
- The use of the graspable handrail is optional, but may be required by local building codes.

Note: That the top and bottom handrails are distinct on the Traditional, Fluted, Classical Iron, and Vista Glass Railings.

- The bottom rail support is not required for stair rails.
- Top and bottom handrails, support rails, and graspable handrail must be miter-cut to match the stair angle **(REFER TO FIG. 58)**. Balusters in the Traditional Stair Rail Kit and the Fluted Stair Rail Kit are already notched and mitered to accommodate a stair angle of 26°- 40°.

TRADITIONAL STAIR RAIL ONLY

- Baluster spacers must be miter-cut to match the stair angle. **(REFER TO FIG. 59)**

FLUTED, CLASSICAL IRON, AND VISTA GLASS

- Metal brackets must be bent to match the stair angle. Install brackets into the top and bottom rails first before bending.
- The mounting plates that install onto the posts to cover the metal brackets must be pre-drilled to match the installation holes in the metal brackets.

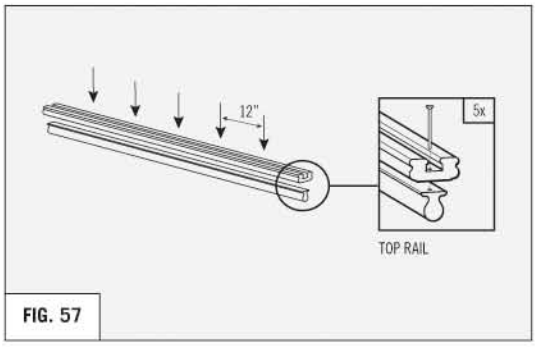

FIG. 57

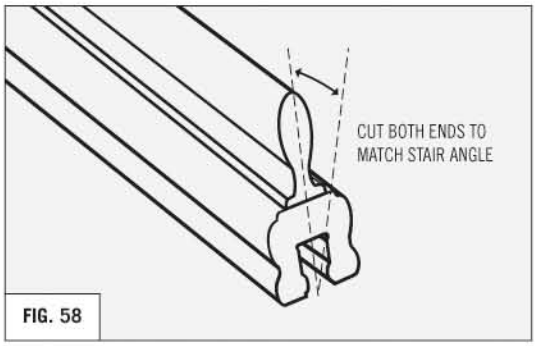

FIG. 58

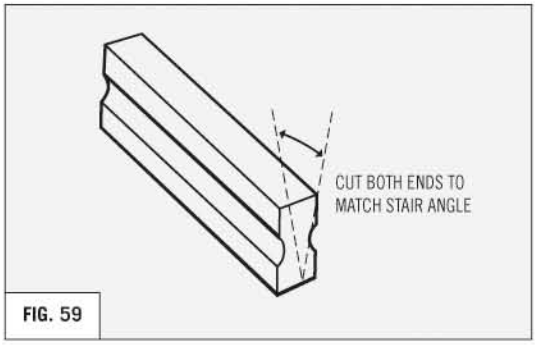

FIG. 59

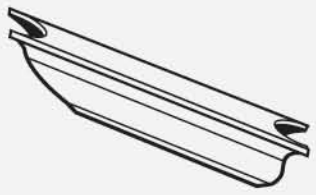

FIG. 60

FLUTED STAIR RAIL ONLY

- The fluted baluster spacers may interfere with the balusters when installed, depending on the stair angle. The hidden corners of the baluster spacer may need to be trimmed with a utility blade prior to installation. **(REFER TO FIG. 60)**

CLASSICAL IRON STAIR RAIL ONLY

- The baluster spacer has been pre-drilled with an oval hole to accommodate a stair angle of 26° – 40°.
- The ends of the baluster spacer may also need to be miter-cut in order to allow easy insertion into the bottom rail and support rail.

VISTA GLASS STAIR RAIL ONLY

- The four end spacers that are installed in the final step in the glass railing installation may need to be mitered to allow easy installation.
- The horizontal frame members that surround the ends of the glass pane must be mitered to the stair angle. The vertical frame members are already notched and mitered to accommodate a stair angle of 26° – 40°.

HOW TO CARE FOR YOUR EON DECK

- Avoid the use of petroleum based products on the boards. i.e. suntanning lotion, bug spray or bubble solution.
- Use only natural fiber mats. Do not use rubber backed mats.
- Regular cleaning can be done by spraying down the deck with a garden hose. Squeegee excess water off afterwards to avoid hard water marks.
- For a more thorough cleaning use a mop and a mild dish detergent to clean the deck. Give the deck a good rinse and squeegee away excess water to avoid soap build up.
- A plastic shovel should be used to remove snow (do not use a metal shovel it may gouge the deck).
- A straw broom can be used to remove a light dusting of snow.
- Fine grain sand and salt can be used to remove ice. As well, ice melt products such as Calcium Chloride can be used.
- To remove scratches from Eon's surface, simply run a loose utility knife blade over the scratch to blend it in.
- For deep scratches, a wax Crayola® Crayon or Minwax® can be used to revive the color.

EON DECKING 25 YEAR LIMITED WARRANTY CERTIFICATE

COVERING YOUR PURCHASE OF EON

CPI Plastics Group Ltd ('CPI') warrants this product to be free from defects in material or workmanship for a period of twenty-five (25) years from the date that the original consumer purchases the product from an authorized CPI dealer. Specifically, CPI warrants to the original purchaser of Eon that the product, when purchased and installed i) as a residential system with railings or ii) as residential decking or as fencing and as any recognized outdoor living product or iii) for other similar residential applications as identified in the CPI point of sale material provided by the dealer, that such product is:

a) rot and water resistant,
b) free from damage by fungal decay or termites,
c) free from checking, splintering or splitting and
d) free from defects in material and workmanship for the period beginning on the date that the Eon product is purchased and continuing for twenty-five (25) years for so long as the original purchaser owns the property (non transferable) on which the Eon product is used for one of the purposes described above.

WARRANTY PROCESS

CPI will replace, at its own expense, any Eon product that is defective, provided it has been used for one of the above named applications. To be eligible for this warranty, the original purchaser must send to CPI at 151 Courtney Park Dr. W., Mississauga, Ontario, Canada, L5W 1Y5, Attention: Eon Warranty Department, the original invoice or proof of purchase of the product and the defective product or proof that the product is defective (e.g., a picture) within 30 days from when the original purchaser became aware of the defect. CPI will assume the cost of delivering the replacement material to the purchaser if found to be defective but will not assume the cost of installation or re-installation.

WARRANTY LIMITATIONS

This 25 Year Limited Warranty sets forth CPI's only warranty obligation with respect to its Eon product and specifically stands in the place of all other warranties, oral or written or expressed or implied. It is suggested that you install your Eon product in accordance with the installation manual. Your failure to do so may void your warranty.

CPI makes no warranty concerning the merchantability of its product or as to the fitness of the product for a particular use that may be provided by the Uniform Commercial Code or any other comparable state statute other than the warranty described herein. CPI shall not be liable for incidental, special, consequential or other similar damages arising from the breach of this warranty. In particular, the liability of CPI, if any, and the purchaser's sole remedy for damages for any claim of any kind whatsoever, regardless of legal theory and whether arising in tort or contract, shall not be greater than the actual purchase price of the product with respect to which such claim was made.

This Warranty shall not apply to defects that occur through normal wear and tear or through the weathering of the product. The warranty only comes into force if the warranty certificate (available on www.eonoutdoor.com) is dated, fully and correctly completed and the warranty certificate has been acknowledged by CPI as having been retrieved from the website. This warranty does not cover products that have not been paid for in full, problems caused by improper storage, handling, installation, finishing, use, modification, or maintenance; Acts of God; accidents, vandalism, products subjected to conditions outside their design limitations; minor imperfections that do not affect the product's structural integrity, minor variations in color, normal wear or discoloration of finish; problems caused by mechanical damage or abrasion; damage caused by acid rain, salt spray, or other corrosive elements; problems caused by high humidity (condensation and frost) or variations in wood grain or color.

Contact us for further information at: 1 (866) 342-5366 **1 (866) DIAL-EON**
or visit us at our website: www.eonoutdoor.com

DESIGN: SPUTNIK DESIGN PARTNERS INC. PRINTED IN CANADA

SPECIFICATION SECTION

DIVISION 7 - THERMAL AND MOISTURE PROTECTION

EMEGA FOAM

TECHNICAL DATA SHEET

0.5 LB BIO- SPRAY FOAM SYSTEM

EMEGA FOAM 0.5 lb Bio-Spray Foam System, is a two part Polyurethane Bio based Spray Foam System that utilizes water for it's blowing agent. In this way EMEGA FOAM is using one of the most environmental sound foam system that is in the market today.

Our products are also available in several reactivity profiles so that no matter what the season is, we have a foam with the proper speed of reactivity for you. Please call us for details, and asked about our winter speed systems.

Typical uses for EMEGA FOAM 0.5 lb Bio-Spray Foam System, are new home construction for the side walls, underside of the roof deck, crawl spaces, attics in older homes for adding more insulation, tanks, metal agricultural buildings, refrigeration storage units, and many others.

PHYSICAL PROPERTY	TEST NUMBER	DATA
Density	ASTM D1620	0.5 lb/cubic feet
"R" Value	ASTM C-177	3.6 per inch
Compressive Strength	ASTM D-1621	10 PSI
Perm Rating	ASTM C-155	1.8
Flame Spread	ASTM E-84	< 18
Smoke Development	ASTM E-84	<350

Storage: Both Components "A" and Component "B" should be stored in the unopened containers at a minimum of 50° F, the temperature should not exceed 100°F during storage.

EMEGA FOAM

TECHNICAL DATA SHEET

1.0 LB BIO- SPRAY FOAM SYSTEM

EMEGA FOAM 1.0 lb Bio-Spray Foam System, is a two part Polyurethane Bio Based Spray Foam System that utilizes water for it's blowing agent. In this way EMEGA FOAM is using one of the most environmental sound foam system that is in the market today.

Our products are also available in several reactivity profiles so that no matter what the season is, we have a foam with the proper speed of reactivity for you. Please call us for details, and asked about our winter speed systems.

Typical uses for EMEGA FOAM 1.0 lb Bio-Spray Foam System, are new home construction for the side walls, underside of the roof deck, crawl spaces, attics in older homes for adding more insulation, tanks, metal agricultural buildings, refrigeration storage units, and many others.

PHYSICAL PROPERTY	TEST NUMBER	DATA
Density	ASTM D1620	1.1 lb/cubic feet
"R" Value	ASTM C-177	4.5 per inch
Compressive Strength	ASTM D-1621	14 PSI
Perm Rating	ASTM C-155	1.6
Flame Spread	ASTM E-84	< 20
Smoke Development	ASTM E-84	<400

Storage: Both Components "A" and Component "B" should be stored in the unopened containers at a minimum of 50° F, the temperature should not exceed 100°F during storage.

EMEGA Foam

TECHNICAL DATA SHEET

2 LB BIO- SPRAY FOAM SYSTEM

EMEGA Foam 2 lb Bio-Spray Foam System, is a two part Polyurethane Bio based Spray Foam System that utilizes water for it's blowing agent. In this way EMEGA Foam is using one of the most environmental sound foam system that is in the market today.

Our products are also available in several reactivity profiles so that no matter what the season is, we have a foam with the proper speed of reactivity for you. Please call us for details, and asked about our winter speed systems.

Typical uses for EMEGA Foam 2 lb Bio-Spray Foam System, are new home construction for the side walls, underside of the roof deck, crawl spaces, attics in older homes for adding more insulation, tanks, metal agricultural buildings, refrigeration storage units, and many others.

PHYSICAL PROPERTY	TEST NUMBER	DATA
Density	ASTM D1620	1.8 lb/cubic feet
"R" Value	ASTM C-177	6.5 per inch
Compressive Strength	ASTM D-1621	24 PSI
Perm Rating	ASTM C-155	1.2
Flame Spread	ASTM E-84	< 20
Smoke Development	ASTM E-84	<400

Storage: Both Components "A" and Component "B" should be stored in the unopened containers at a minimum of 50° F, the temperature should not exceed 100°F during storage.

HOME SLICKER® PLUS TYPAR®

Home Slicker® Plus Typar®

Home Slicker® Plus Typar® is a cost-effective, labor and material saving, moisture eliminating rainscreen and water resistive barrier. Each roll contains the patented Home Slicker three-dimensional matrix bonded to Typar, the premium residential and commercial grade housewrap. This simple design allows you to install double the sidewall protection in half the time.

HOME SLICKER PLUS... TYPAR Rainscreen - Water Resistive Barrier

UNIQUE BENEFITS FOR SUPERIOR WALL PROTECTION:

- Combined benefits of a rainscreen and water resisitive barrier in one product
- Reduces installation time by installing two moisture management products at one time
- Easily cuts and splices with a utility knife making for a fast installation
- Eliminates the need for furring strips

HOME SLICKER BENEFITS:

- Excellent moisture management
- Longer lasting finishes performance
- Helps reduce trapped moisture
- Superior compression resistance

TYPAR BENEFITS:

- Exceptional water holdout
- Unsurpassed tear strength and durability
- Optimal moisture vapor transmission
- Superior air holdout
- Outstanding ultraviolet performance

Typar® is a registered trademark of Reemay, Inc.

NET FREE AREA	WIDTH	LENGTH	THICKNESS	WARRANTY
N/A	39.37" (1 m) HS 44" (1.1 m) Typar 4" (10,2 cm) (min) Typar flap	61.5' (18,7 m) (200 sq ft)	.26" (6,6 mm)	50 Year Limited

See also: Drawings | Specs | Warranty || return to products page

HOME SLICKER® SPECIFICATIONS

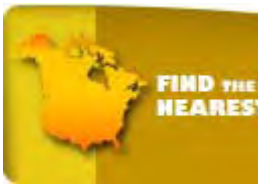

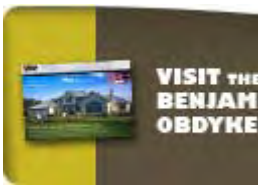

Home Slicker® Specifications

Home Slicker Specifications		
Width	39.37 in (1m)	
Length	46.5 ft (14,17m)	
Coverage	150 sq ft ± 2 sq ft (45,72m ± 0,6m)	
Compression & Thickness	0 psf	0.264" (6,7 mm)
	50 psf	0.247" (6,3 mm)
	100 psf	0.241" (6,1 mm)
	150 psf	0.235" (6 mm)
Weight	7.2 lbs per roll 7.0 oz/sq yd	
Patent	# 6,594,965	
Matrix Design	8 channels per 4 in (2 channels per in)	
Warranty	50 Year Limited	
Home Slicker Plus Typar Specifications		
Thickness	0.26 in (6,6 mm)	
Weight of Home Slicker	7 oz/sq yd	
Weight of Typar	3.46 oz/sq yd	
Width of Home Slicker	39.37 in (1 m)	
Width of Typar	44 in (1,12 m)	
Width of Typar Flap	4 in (10,2 cm) (min)	
Length	61.5 ft (18,7 m) / 200 sq ft	
Warranty	50 Year Limited	
Home Slicker 10 Specifications		
Thickness	7/16" (11 mm)	
Weight 271 g/m^2	8 lbs. per roll	
Width	39.37" (1 m)	
Matrix Design	1.5 channels per inch	
Length	38.5 ft (11,73 m)	
Coverage	125 sq ft (11,6 m^2)	

Warranty	50 Year Limited

Home Slicker 10 Plus Typar Specifications

Thickness	7/16" (11 mm)
Weight of Home Slicker	10 oz/yd^2 (339 g/m^2)
Weight of Typar	3.46 oz/yd^2 (117,3 g/m^2)
Width of Home Slicker	39.37 in (1 m)
Width of Typar	45 in (1,14 m)
Width of Typar Flap	4 in (10,2 cm)
Length	38.5 ft (11,73 m)
Coverage	125 sq ft (11,6 m^2)
Warranty	50 Year Limited

ATAS INTERNATIONAL, INC.

SPECIFICATION DATA SHEET

1. PRODUCT NAME

BELVEDERE
SHORT RIB PANEL
BWK360

2. MANUFACTURER

ATAS INTERNATIONAL, INC.
website: www.atas.com
email: info@atas.com
Corporate Headquarters:
Allentown, PA 18106
Phone: (610) 395-8445
Fax: (610) 395-9342
Western Facility:
Mesa, AZ 85204
Phone: (480) 558-7210
Fax: (480) 558-7217
Southern Facility:
Maryville, TN 37801
Phone: (800) 468-1441

3. PRODUCT DESCRIPTION

Basic Uses

BWK360 is a 1- ½" deep ribbed panel that features six broad low and six narrow high cells. This panel can be used for roofing applications and installed vertically or horizontally on walls.

Composition & Materials

Standard Offerings: The BWK360 panel is roll-formed from .032 and .040 Aluminum; 24 gauge Metallic Coated Steel.

Special Offerings: 20, 22 and 24 gauge Galvalume® Plus; 20 and 22 gauge Metallic Coated Steel; 16 or 20 oz. Copper.

Sizes

The BWK360 panel has 36" (width) net coverage. Panel lengths are cut to customer specifications, with a minimum of 2' and a maximum of 45'.

Colors & Finishes

A choice of 30 colors is available in a Kynar 500® or Hylar 5000® finish. (Request color chart or chips).

4. TECHNICAL DATA

Kynar 500® or Hylar 5000® based finishes tested by paint supplier for:
Dry Film Thickness: ASTM D 1005, ASTM D 1400, ASTM D 4138 or ASTM D 5796
Specular Gloss: ASTM D 523
Pencil Hardness: ASTM D 3363
T-Bend Flexibility: ASTM D 4145
Mandrel Bend Flexibility: ASTM D 522
Impact Resistance: ASTM D 2794
Adhesion: ASTM D 3359
Water Immersion Resistance: ASTM D 870
Abrasion Resistance: ASTM D 968
Acid Resistance: ASTM D 1308
Acid Rain Resistance (Kesternich): ASTM G 87 or DIN 50018
Salt Spray: ASTM B 117
Cyclic Salt Spray: ASTM D 5894 and ASTM D 5487
Humidity Resistance: ASTM D 2247
Accelerated Weathering: ASTM D 822 and ASTM G 23, ASTM G 151 or ASTM G 153
Color Retention, Florida Exposure: ASTM D 2244
Chalking Resistance – ASTM D 4214
Cleveland Condensing Cabinet: ASTM D 4585
Cure Test, MEK Resistance: ASTM D 5402
Alkali Resistance, Sodium Hydroxide: ASTM D 1308, Procedure 7.2
Organic coatings meet requirements of AAMA 2605 when applied to aluminum.
Panel testing/ratings:
UL Fire resistance rating design numbers: See www.ul.com, File R12113, or contact ATAS for current listing.
Galvanized Steel: ASTM A 653
Galvalume® Plus Steel: ASTM A 792
Aluminum: ASTM B 209
Copper: ASTM B 370
Coil Coating: ASTM A 755
Field Tested and Approved.
Load Tables available upon request.

5. INSTALLATION

Installation is with direct fastening methods. Contact ATAS technical service advisors for more information, including details and installation seminars.

6. AVAILABILITY & COST

Availability

The BWK360 panel is available through ATAS product distributors. A complete line of related components and trim accessories is available to complete the wall system. In addition, a complete line of rainware and perimeter roof edge trims can be supplied by ATAS to complement the wall system. Flat sheet and/or coil stock is available in matching color for fabrication of related components by the installing contractor.

Cost

Contact ATAS product distributors for current pricing.

7. WARRANTY

The fluoropolymer, Kynar 500® or Hylar 5000® finish carries a twenty (20) year limited warranty against chipping, cracking, peeling, chalking and fading.

8. MAINTENANCE

The BWK360 panel is virtually maintenance free. Surface residue may be easily removed by conventional cleaning methods. Minor scratches may be touched up with a matching paint, available from the manufacturer.

9. TECHNICAL SERVICES

Complete technical information and literature are available from ATAS International, Inc. ATAS will assist with design ideas and shop drawings.

10. FILING SYSTEM

- Sweet's Catalog
- Sweet's CD
- www.atas.com
- Additional product information is available from the manufacturer upon request.

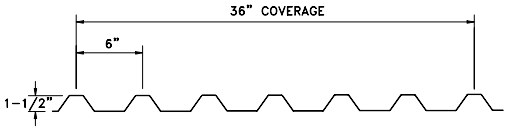

SHORT RIB PANEL

LOAD TABLES BWK360
STEEL

SHORT RIB PANEL BWK360										
(+/-) Allowable Wind Pressure - PSF										
Panel Gauge	# of Spans	Span in feet								
		4.0	4.5	5.0	5.5	6.0	6.5	7.0	7.5	8.0
24 ga.	1	139	97	71	53	41	32	25	21	
	2	186	147	119	98	82	70	60	50	41
	3	233	184	143	107	82	65	52	42	34
22 ga.	1	185	130	95	71	55	43	34	28	23
	2	256	202	164	135	114	97	83	67	55
	3	320	253	190	143	110	86	69	56	46
20 ga.	1	230	162	118	88	68	53	43	35	28
	2	331	262	212	175	147	125	103	84	69
	3	414	325	237	178	137	108	86	70	57

AISI SECTION PROPERTIES (per foot of width)				
BWK360	(+)1	(+)S	(-)1	(-)S
24 ga.	0.112	0.125	0.092	0.112
22 ga.	0.148	0.169	0.123	0.154
20 ga.	0.184	0.214	0.155	0.199

1. BWK360 section properties have been determined in accordance with the latest edition of the Cold Formed Steel Design Manual as published by the American Iron & Steel Institute (AISI).
2. The section properties listed for BWK360 panel are to be used for the analysis of live loads acting perpendicular to the plane of the product.
3. The Charted Load/Span values account for the following:
   A. Panel buckling strength
   B. Deflection limit of L/180
   C. Positive and negative wind considerations
4. Loan/Span values do not include consideration of fastener capacity.
5. Fy (min)=50 ksi.
6. Charted values include a 1/3 increase in “Allowable Wind Pressure”
7. Minimum roof slope recommendation is 2:12.

Firestone
BUILDING PRODUCTS COMPANY

UltraPly™ TPO
(TPO 96 & 120)

Firestone Item Number: See Product List

DESCRIPTION:

Firestone UltraPly™ TPO is a flexible Thermoplastic Polyolefin roofing membrane that is produced with a polyester weft inserted reinforcement. This heat weldable TPO membrane is available in .045 mil (1.1 mm) and .060 mil (1.5 mm) thicknesses in both 8' (TPO 96) and 10' widths (TPO 120). Additional thicknesses are available on special orders. Available in white (tan or gray on special orders), this reflective membrane is suitable for a variety of low slope applications.

METHOD OF APPLICATION:

1. Firestone UltraPly TPO membrane is installed as a continuous roofing or waterproofing layer on the roof. Rolls are overlapped (Side Laps and End Laps) prior to the heat welding of the seam areas.
2. Install the UltraPly TPO Roofing System in accordance with current Firestone UltraPly TPO specifications, details and workmanship requirements.

Please contact Firestone Roofing Solutions Department for additional information.

PHYSICAL PROPERTIES PER ASTM 6878-03:

Property	Test Method	Typical
UNAGED PROPERTIES:		
Thickness, min. in (mm)	45 mil	.045" (1.143 mm) ± 10%
Sheet Overall	60 mil	.060" (1.52 mm) ± 10%
Thickness Over Scrim	ASTM D 4637	
.045" Membrane	(Optical Method)	0.018" (0.457 mm) ± 10%
.060" Membrane		0.024" (0.609 mm) ± 10%
Breaking Strength	ASTM D 751	350 lbf (1560 N)
Elongation at Reinforcement break	ASTM D 751	30%
Tearing Strength	ASTM D 751 (8"x8" specimen)	86 lbf (382 N)
Brittleness Point	ASTM D 2137	-50ºF (-46ºC)
Linear Dimension Change	ASTM D 1204 (6 hrs @70º C)	±0.15%
Ozone Resistance	ASTM D 1149	PASS (no cracks)
Factory Seam Strength	ASTM D751	65 lbf (289 N)
Puncture Resistance	FTM 101C Method 2031	265 lbf (1174 N)
Solar Reflectance	ASTM C 1549	.79

PRODUCT DATA

PHYSICAL PROPERTIES PER ASTM 6878-03 (CONT.):

Property	Test Method	Typical
AGED PROPERTIES:		
Breaking Strength	ASTM D 751	366 lbf (1628 N)*
Elongation at Reinforcement Break	ASTM D 751	30%*
Tearing Strength	ASTM D 751 (8"x8" specimen)	86 lbf (382 N)*
Weight Change (Membrane)	ASTM D 471	1% (change in mass)
AGED PROPERTIES:		
Ozone Resistance	ASTM D 1149	PASS (No cracks)
Weather resistance (Retained Values)	ASTM G 151/ G 154	
Visual Inspection		PASS
Breaking Strength, % min.		90 % retained
Elongation at Reinforcement Break	ASTM D 751	90% retained
Resistance to Xenon-Arc Weathering	ASTM G 151/ G 155	PASS

*ASTM D 6878-03 requires retained values of 90% or original breaking strength and elongation and 60% for tearing strength.

PRODUCT DATA:

Gauge	Width	Length
.045"	5 ft (1.52 m)	100 ft (30.48 m)
	8 ft (2.43 m)	100 ft (30.48 m)
	10 ft (3.04 m)	100 ft (30.48 m)
.060"	5 ft (1.52 m)	100 ft (30.48 m)
	8 ft (2.43 m)	100 ft (30.48 m)
	10 ft (3.04 m)	100 ft (30.48 m)

PRECAUTIONS:

1. Exercise caution when lifting, moving, transporting, storing or handling membrane rolls to avoid sources of punctures and possible physical damage.
2. Contact Firestone Roofing Solutions Department for specific recommendations regarding chemical or waste product compatibility with Firestone UltraPly TPO Membrane.

LEED INFORMATION:

Post Consumer Recycled Content: 0%
Post Industrial Recycled Content: 0%
Manufacturing Location: Wellford, SC

Subject to the conditions of Approval when installed as described in the current edition of the FM Approval Guide

Membrane for Roofing Systems
As to an External Fire Exposure Only
61P2
See UL Directory of Products
Certified for Canada
And UL Roofing Materials
And Systems Directory
R9516

WHITE

Cool Roof Rating Council Product Identification Number: 0608-0008
(For White Membrane)

Firestone
BUILDING PRODUCTS COMPANY

UltraPly™ TPO
(TPO 96 & 120)

Firestone Building Products Company
A Division of BFS Diversified Products, LLC
310 E. 96th Street, Indianapolis, IN 46240
Sales: (800) 428-4442 • Technical (800) 428-4511
www.firestonebpco.com

Firestone Building Products Company
Material Safety Data Sheet

SECTION 1: PRODUCT IDENTIFICATION

Product Name:	Firestone Ultraply TPO Membrane
Chemical Name / Synonym:	Ultraply TPO (White, Tan, Gray), UltraPly TPO 96 (White, Tan, Gray), UltraPly TPO 120 (White, Tan, Gray), UltraPly TPO XR, TPO 18" Curb Flashing
Chemical Family:	Thermoplastic Polyolefin
24-Hour Emergency Phone:	(800) 424-9300 CHEMTREC
Manufacturer's Name:	Firestone Building Products Company
Manufacturer's Address:	310 East 96th Street, Indianapolis, IN 46240
NFPA Hazard Rating:	Health 1, Flammability 1, Reactivity 0
HMIS Hazard Rating:	Health 0, Flammability 1, Reactivity 0

SECTION 2: CHEMICAL COMPOSITION

Chemical Name:	Common Name:	CAS #:	% (by wt)	Exposure Limits:
Nonhazardous as per 29 CFR 1910.1200.	None	None	100	None Established

SECTION 3: HAZARD IDENTIFICATION

Primary Route of Exposure:	None
Signs and Symptoms of Exposure:	No known adverse effects
Medical Conditions Aggravated by Exposure:	None known
Chronic Effects:	No known adverse effects
Carcinogenicity:	None

SECTION 4: FIRST AID MEASURES

First Aid Procedures:	No special action necessary.

SECTION 5: FIRE FIGHTING PROCEDURES

Suitable Extinguishing Media:	Carbon dioxide, foam, sand/earth, or dry chemicals.
Hazardous Combustion Products:	Carbon dioxide and carbon monoxide, oxides of nitrogen, sulfur dioxide, partially burned carbon.
Recommended Fire Fighting Procedures:	Wear impermeable protective clothing and self-contained breathing apparatus. Toxic fumes and vapors may be evolved.
Unusual Fire and Explosion Hazards:	None known

SECTION 6: PRECAUTIONS FOR SAFE HANDLING AND USE

Steps to Be Taken in Case Material is Released or Spilled:	Not Applicable
Precautions to Be Taken in Handling and Storing:	No special handling precautions. Store where materials are not exposed to excessive heat, cold or moisture.

SECTION 7: EXPOSURE CONTROLS / PERSONAL PROTECTION

Ventilation:	Store and use in well ventilated areas.
Respiratory Protection:	None required
Eye Protection:	None required
Skin Protection:	None required
Other:	None
Work / Hygienic Practices:	Wash exposed skin prior to eating, drinking or smoking and at the end of each shift. Wash contaminated clothing prior to reuse.

SECTION 8: PHYSICAL AND CHEMICAL PROPERTIES

Appearance and Odor:	Black and white sheet, white and gray sheet, tan and gray sheet, gray and gray sheet or white sheet with fleece back membrane. Essentially no odor.		
Flash Point:	Not Applicable	Lower Explosive Limit:	None
Method Used:	Not Applicable	Upper Explosive Limit:	None
Evaporation Rate:	Not Applicable	Boiling Point:	None
pH (undiluted product):	Not Applicable	Melting Point:	Unknown
Solubility in Water:	Insoluble	Specific Gravity:	0.94
Vapor Density:	Not Applicable	Percent Volatile:	Unknown
Vapor Pressure:	Not Applicable		

SECTION 9: STABILITY AND REACTIVITY

Thermal Stability:	Stable
Hazardous Polymerization:	Will not occur
Conditions to Avoid:	None known

SECTION 10: TRANSPORTATION

Regulatory Agency:	Not Regulated
Proper Shipping Name:	Not Applicable
Hazard Classification:	Not Applicable
Identification Number:	Not Applicable
Labels Required:	Not Applicable
Other Requirements:	Not Applicable

SECTION 11: MISCELLANEOUS INFORMATION

Additional Comments:	This product is considered an article as per 29 CFR 1910.1200 and is, therefore, exempt from the requirements of the Hazard Communication standard.
Date of Previous MSDS:	February 9, 2005
Changes Since Previous MSDS:	Address change in section 1
Telephone Number for Additional Information:	(317) 575-7190

DISCLAIMER

The information contained herein is based on data considered accurate which has been obtained from other companies and organizations. However, no warranty or representation is expressed or implied that the information, is accurate, complete or representative. Firestone Building Products Company, a subsidiary of Bridgestone Americas Holding, Inc. assumes no responsibility for injury to the buyer, the buyer's employees, or any third persons, if reasonable safety procedures are not followed. Additionally, Firestone Building Products Company assumes no responsibility for injury to buyer, the buyer's employees, or any third persons caused by abnormal use of this material, even if reasonable safety procedures are followed.

Firestone Building Products Company
Material Safety Data Sheet

SECTION 1: PRODUCT IDENTIFICATION

Product Name:	UltraPly TPO Series
Chemical Name / Synonym:	Inside/Outside Corner Flashing, Small and Large Pipe Flashing, T-Joint Cover, Unsupported Flashing, Coated Metal
Chemical Family:	Mixture
24-Hour Emergency Phone:	(800) 424-9300 CHEMTREC
Manufacturer's Name:	Firestone Building Products Company
Manufacturer's Address:	310 East 96th Street, Indianapolis, IN 46240
NFPA Hazard Rating:	Health 1, Flammability 1, Reactivity 0
HMIS Hazard Rating:	Health 0, Flammability 1, Reactivity 0

SECTION 2: CHEMICAL COMPOSITION

Chemical Name:	Common Name:	CAS #:	% (by wt)	Exposure Limits:
Nonhazardous as per 29 CFR 1910.1200.	None	None	100	None Established

SECTION 3: HAZARD IDENTIFICATION

Primary Route of Exposure:	None
Signs and Symptoms of Exposure:	No known adverse effects
Medical Conditions Aggravated by Exposure:	None known
Chronic Effects:	No known adverse effects
Carcinogenicity:	None

SECTION 4: FIRST AID MEASURES

First Aid Procedures:	No special action necessary.

SECTION 5: FIRE FIGHTING PROCEDURES

Suitable Extinguishing Media:	Carbon dioxide, foam, sand/earth, or dry chemicals.
Hazardous Combustion Products:	Carbon dioxide and carbon monoxide, oxides of nitrogen, sulfur dioxide, partially burned carbon.
Recommended Fire Fighting Procedures:	Wear impermeable protective clothing and self-contained breathing apparatus. Toxic fumes and vapors may be evolved.
Unusual Fire and Explosion Hazards:	None known

SECTION 6: PRECAUTIONS FOR SAFE HANDLING AND USE

Steps to Be Taken in Case Material is Released or Spilled:	Not Applicable
Precautions to Be Taken in Handling and Storing:	No special handling precautions. Store where materials are not exposed to excessive heat, cold or moisture.

SECTION 7: EXPOSURE CONTROLS / PERSONAL PROTECTION

Ventilation:	Store and use in well ventilated areas.
Respiratory Protection:	None required
Eye Protection:	None required
Skin Protection:	None required
Other:	None
Work / Hygienic Practices:	Wash exposed skin prior to eating, drinking or smoking and at the end of each shift. Wash contaminated clothing prior to reuse.

SECTION 8: PHYSICAL AND CHEMICAL PROPERTIES

Appearance and Odor:	White, tan or gray in color. Essentially no odor.		
Flash Point:	Not Applicable	Lower Explosive Limit:	None
Method Used:	Not Applicable	Upper Explosive Limit:	None
Evaporation Rate:	Not Applicable	Boiling Point:	None
pH (undiluted product):	Not Applicable	Melting Point:	Unknown
Solubility in Water:	Insoluble	Specific Gravity:	Unknown
Vapor Density:	Not Applicable	Percent Volatile:	Unknown
Vapor Pressure:	Not Applicable		

SECTION 9: STABILITY AND REACTIVITY

Thermal Stability:	Stable
Hazardous Polymerization:	Will not occur
Conditions to Avoid:	None known

SECTION 10: TRANSPORTATION

Regulatory Agency:	Not Regulated
Proper Shipping Name:	Not Applicable
Hazard Classification:	Not Applicable
Identification Number:	Not Applicable
Labels Required:	Not Applicable
Other Requirements:	Not Applicable

SECTION 11: MISCELLANEOUS INFORMATION

Additional Comments:	This product is considered an article as per 29 CFR 1910.1200 and is, therefore, exempt from the requirements of the Hazard Communication standard.
Date of Previous MSDS:	April 8, 2004
Changes Since Previous MSDS:	Address change in section 1.
Telephone Number for Additional Information:	(317) 575-7190

DISCLAIMER

The information contained herein is based on data considered accurate which has been obtained from other companies and organizations. However, no warranty or representation is expressed or implied that the information, is accurate, complete or representative. Firestone Building Products Company, a subsidiary of Bridgestone Americas Holding, Inc. assumes no responsibility for injury to the buyer, the buyer's employees, or any third persons, if reasonable safety procedures are not followed. Additionally, Firestone Building Products Company assumes no responsibility for injury to buyer, the buyer's employees, or any third persons caused by abnormal use of this material, even if reasonable safety procedures are followed.

Fire Barrier IC 15WB+ Sealant

Product Data

SYSTEM COMPATIBLE

FILL, VOID OR CAVITY MATERIALS
FOR USE IN JOINT SYSTEMS AND
THROUGH-PENETRATION FIRESTOP SYSTEMS
SEE UL DIRECTORY OF PRODUCTS CERTIFIED FOR CANADA
SEE UL FIRE RESISTANCE DIRECTORY
90G9

1. Product Description

3M™ Fire Barrier IC 15WB+ Sealant is a latex sealant designed for use as a one-part fire, smoke, noxious gas and water resistant sealant. In addition, the unique intumescent property of this material (expands when heated) means that as the combustible pipe, cable or pipe insulation is consumed by fire, the sealant expands to maintain the penetration seal.

3M Fire Barrier IC 15WB+ Sealant can be installed with a standard or bulk caulking gun, pneumatic pumping equipment or it can be easily applied with a putty knife or trowel. Sealant bonds to gypsum wallboard, concrete, metals, wood, plastic and cable jacketing. No mixing is required. Tool within 5 minutes of application, if required.

3M Fire Barrier IC 15WB+ Features

- Water Base: Easy clean up, no special handling, routine disposal.
- Intumescent: Expands when heated to maintain seal around items consumed by fire.
- Endothermic: Absorbs heat energy, releases chemically bound water.
- Thixotropic: Will not sag or run in overhead or vertical applications.
- Halogen-free.
- Fast dry: Tack-free in approximately 8 to 12 minutes @ 73°F (23°C).
- Paintable. Best results obtained after 72 hour cure.
- Minimal shrinkage.
- Yellow color.
- High flow rate: 2000 g/min. with 1/4 in. (6 mm) nozzle.
- Point contact allowed.
- Continuous operating temperature not to exceed 120°F (48°C).

2. Applications

Use 3M Fire Barrier IC 15WB+ Sealant to firestop the following construction voids:

- Blank openings
- Metallic pipes
- Non-metallic pipes
- Cables
- Cable trays
- Insulated pipes
- Busways
- HVAC vents and ducts
- Combinations
- Bottom of wall construction joints

The product will restore fire rated construction to its original integrity when installed in accordance with the applicable listed UL system.

3. Physical Properties

Unit	Volume	Units/ Ctn.
10.1 fl. oz. (0,29 L) Cartridge	18.2 cu. in. (298 cu. cm)	12
20.0 fl. oz. (0,59 L) Sausage	36.0 cu. in. (591 cu. cm)	10
27.0 fl. oz. (0,79 L) Cartridge	48.7 cu. in. (798 cu. cm)	6
4.5 gallon (17,0 L) Pail	1039.0 cu. in. (17034 cu. cm)	1

4. Specifications

Product

The firestopping sealant shall be a one-part, intumescent, latex elastomer. The sealant shall be capable of expanding a minimum of 2 times at 1000°F. The material shall be thixotropic and be applicable to overhead, vertical and horizontal firestops. The sealant shall be listed by independent test agencies such as UL, FM or OPL and be tested to, and pass the criteria of, ASTM E 814 (UL 1479) standard test method for fire tests of through-penetration fire stops and ASTM E 1966 (UL 2079) standard test method for fire-resistive joint systems.

Typically Specified Divisions

Division 7	Thermal and Moisture Protection
07840	Firestopping

5. Performance

A. Typical Physical Properties

Tack Free Time (ASTM C679-87):	8 to 12 minutes @73°F (23°C)
Expansion at 662° F (350°C):	2.0
Color:	Yellow
Density:	12.0 lb./gal. (1,43 kg/L)
Adhesion:	Very good on all construction substrates
Application:	Caulk guns, trowel, spatula, pressurized pumps
Durometer Hardness (Shore A):	70
Solids:	80% by weight
VOC:	0
Odor:	Pleasant non-irritating
Flow Rate:	2000 grams/min. from 1/4 in. (6,35 mm) nozzle at 50 psi
ASTM E 84: Flame Spread:	0
Smoke Development:	0
Boeing Flow (Sag Characteristics):	<2 in. (5,08 cm) in 5 minutes

B. Firestopping Properties

Meets the criteria of ASTM E 814 (UL 1479) standard test method for fire tests of through-penetration fire stops tested under positive pressure, and ASTM E 1966 (UL 2079) standard test for fire-resistive joint systems. Consult current UL Fire Resistance Directory for listed systems.

6. Installation Techniques

Shown are examples of approved applications of IC 15WB+ Sealant. Additional drawings and details are available from 3M Authorized Fire Protection Products Distributors.

Installation Notes:

1. Metal Pipe/Conduit applications through nominal 10.75 in. (273,0 mm) outside diameter.
- Installed depth of IC 15WB+ Sealant 1/2 in. (12,7 mm).
- Refer to appropriate system for annular space requirement.
- Minimum 4 pcf mineral wool for backing.

2. Insulated Cable Applications
- A 1/2 in. (12,7 mm) minimum depth of IC 15WB+ Sealant.
- All cases require mineral wool (safing) for backing.

3. Fiberglass Insulated Pipe Applications
- Refer to appropriate system for insulation thicknesses, annular space, mineral wool and sealant application.

Typical Penetration Firestops For Metal Pipe/Conduit, Insulated Cable and Fiberglass Insulated Pipe Through Fire Rated Constructions

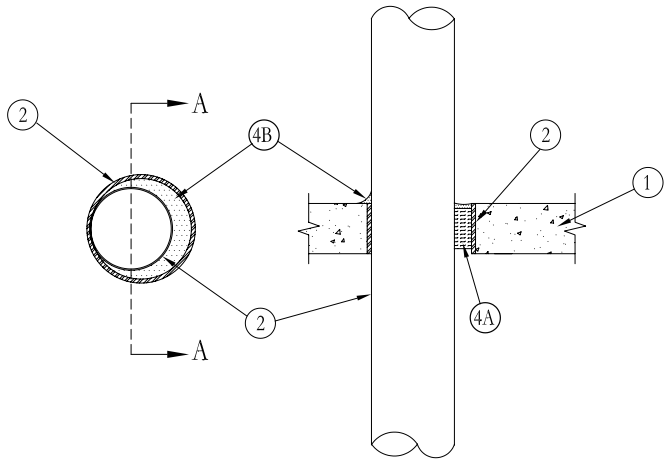

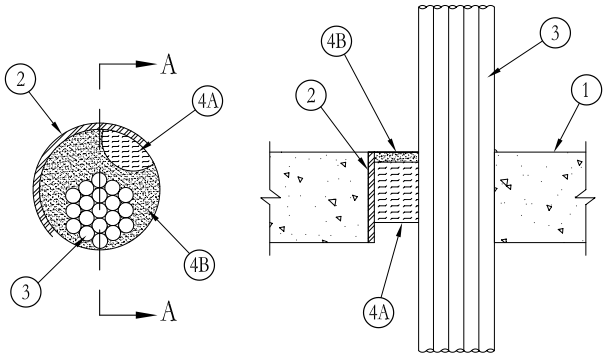

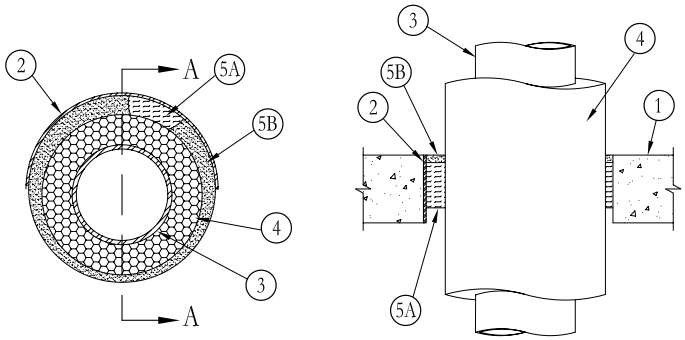

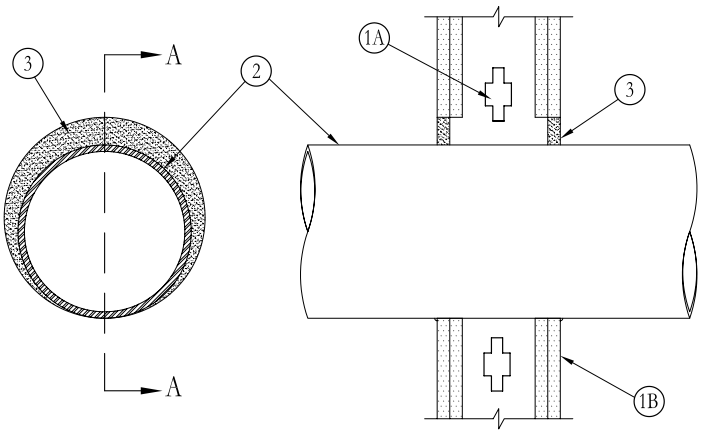

7. Maintenance

3M Fire Barrier IC 15WB+ Sealant is stable under normal storage conditions and has a one year shelf life. Stock rotation is recommended. Store between 40°F (4°C) and 90°F (32°C) for maximum shelf life. Keep from freezing during storage.

8. Purchase Information

3M Fire Barrier IC 15WB+ Sealant is available from 3M Authorized Fire Protection Products Distributors. For information on where to buy, go to www.3m.com/firestop or call (800) 328-1687.

9. Safe Handling Information

Consult Material Safety Data Sheet prior to handling and disposing of 3M Fire Barrier IC 15WB+ Sealant.

*FGG/BM® System Compatible indicates this product has been tested and is monitored on an on going basis to assure chemical compatibility with FlowGuard Gold®, BlazeMaster®, and Corzan® pipe and fittings.

FGG/BM®, FlowGuard Gold®, BlazeMaster® and Corzan® are registered trademarks of Noveon IP HoldingsCorp.

Warranty and Limited Remedy

This product will be free from defects in material and manufacture for a period of ninety (90) days from date of purchase. **3M MAKES NO OTHER WARRANTIES INCLUDING, BUT NOT LIMITED TO, ANY IMPLIED WARRANTY OF MERCHANTABILITY OR FITNESS FOR A PARTICULAR PURPOSE.** User is responsible for determining whether the 3M product is fit for a particular purpose and suitable for user's method of application. If this 3M product is proved to be defective within the warranty period stated above, your exclusive remedy and 3M's sole obligation shall be, at 3M's option, to replace or repair the 3M product or refund the purchase price of the 3M product.

Limitation of Liability

Except where prohibited by law, 3M will not be liable for any loss or damage arising from the use of this 3M product, whether direct, indirect, special, incidental or consequential, regardless of the legal theory asserted, including warranty, contract, negligence or strict liability.

3M

Building Safety Solutions Department

3M Center, 223-2S-24
St. Paul, MN 55144-1000
(800) 328-1687
www.3m.com/firestop

Printed in U.S.A.
Bolger 5060101
 98-0400-5077-9

Technical Bulletin

2400 Boston Street, Suite 200, Baltimore, Maryland 21224
Phone: 410-675-2100 or 800-543-3840

Revised: 4/02/03

DAP® ALEX PLUS® Acrylic Latex Caulk Plus Silicone

- **Provides Durable, Flexible Seal**
- **Cured Caulk is Mildew Resistant**
- **Interior/Exterior Use**
- **Paintable**
- **Easy Water Clean-Up**

Packaging:	10.1fl oz. (300 ml), *5.5 fl oz (162ml)
Color:	White, Antique White, Brown, Cedar Tan, Dark Bronze, Slate Gray, Almond, Black
UPC Number:	18172, 18128, 18101, 18152, 18103, 18139, 18112, 18120, 18110, 18118, 18111, 18122, 18109, 18124, 18107, 18126, 18135, 18130, 18136, 18656, 74225, 74250, 74230, 74258, 74256, 74254, 74260 * Available in white only

Company Identification:

Manufacturer:	DAP Inc., 2400 Boston St., Baltimore, Maryland 21224
Usage Information:	DAP HELPLINE: 888-DAP-TIPS, 9:00 am to 7:00 pm EST.
Order Information:	800-327-3339
Fax Number:	410-534-2650

Also, visit the DAP website at **www.dap.com.**

Product Description:

ALEX PLUS® Acrylic Latex Caulk Plus Silicone is a professional quality caulking product formulated to last 35 years or more. It is a multi-purpose adhesive caulk for interior and exterior use. Alex Plus® contains silicone, which allows for better adhesion and flexibility. It prevents air and moisture from passing through cracks and joints. It provides excellent flexibility to resist expansion and contraction without cracking. Cured caulk is mildew resistant. Alex Plus® is paintable with latex and oil-based paints. Safe, latex-base, water cleanup formula.

Suggested Uses:

Ideal for Caulking and Sealing:

- *Windows and door perimeters*
- *Pipes*
- *Moldings*
- *Vents*
- *Corner Joints*
- *Baseboards*
- *Siding and Trim*
- *Ducts*

Adheres To:

- *Wood*
- *Brick*
- *Glass*
- *Metal*
- *Plaster*
- *Drywall*
- *Painted Surfaces*

Performance Characteristics:

- Exceeds the ASTM Specification C-834.
- Treated with mildewcide to protect caulk from the growth of mildew.
- Tack free in 30 minutes.
- Provides a tight yet flexible seal
- Paintable with latex or oil-based paints.
- 35 Year Durability Guarantee
- Easy water clean-up.

Surface Preparation & Application:

- Surface must be clean, dry and free of all dirt, dust, grease, old caulk and debris.
- Cut nozzle at 45º angle to desired bead size. Load cartridge into caulking gun. Fill gap with sealant.
- Smooth the bead of caulk for a neat finish.
- Clean up excess caulk with a damp cloth before it skins over (15 minutes).
- Reseal for storage and reuse.

For Best Results:

- Caulk in temperatures above 40ºF and rising.
- Store caulk away from extreme heat or cold.
- Do not use for below waterline applications or marine or automobile applications.
- Do not use for filling butt joints, surface defects or for tuck pointing.
- Joint width should not exceed 1/2”. If joint depth exceeds 1/2", use foam backer rod.
- Allow caulk to dry at least 2 hours (longer in cool or humid conditions) before painting with latex or oil-based paints.
- Do not use if rain or freezing temperatures are forecasted before full cure can occur. Cold weather and high humidity will slow down cure time.

Physical & Chemical Characteristics:

Vehicle:	Siliconized Acrylic Polymer
Volatile:	Water
Pigment:	Calcium Carbonate
Solids:	83% ± 1% by weight
Weight per Gallon:	14.00 ± 0.05 lbs./gal.
Density:	1.68 ± 0.01
Service Temperature:	-20ºF to 180ºF
Temperature Application Range:	40ºF to 100ºF
Freeze Thaw Stability:	Passes 5 Cycles @ 0ºF (1 cycle = 16 hrs. @ 0ºF, 8 hrs. @ 70ºF)
Dynamic Joint Movement:	± 12%
Flash Point:	None
Consistency:	Smooth and Creamy
Applications:	Interior/Exterior
Life Expectancy:	35 Years
Shelf Life:	1 Year Minimum
Coverage:	10.1 fl oz = 56 linear ft. at a 3/16"diameter bead.
Odor:	Very Mild
Tooling Time:	10 Minutes
Tack Free Time:	30 Minutes
MSDS No:	10002

Clean Up:
Clean up excess caulk with a damp cloth before it skins over (15 minutes). Wash hands with warm water and soap. Dried material must be cut or scraped away.

Safety:
See product label or Material Safety Data Sheet for safety information. You can request an MSDS sheet by calling 888-DAP-TIPS or by visiting our website at **www.dap.com.**

Warranty Information:
If not satisfied with product performance when used as directed, return used container and sales receipt to DAP Inc., Technical Customer Service, 2400 Boston St., Baltimore, MD, 21224, for product replacement or sales price refund. DAP will not be liable for incidental or consequential damage.

RPM Company

Material Safety Data Sheet

24 Hour Emergency Phone Numbers:
Medical: 1-800-327-3874
1-513-558-5111
Transportation:
1-800-535-5053
1-352-323-3500

NOTE: National Response Center emergency numbers to be used only in the event of chemical emergencies involving a spill, leak, fire, exposure or accident involving chemicals.

IMPORTANT: Provide this information to employees, customers, and users of this product. Read this MSDS before handling or disposing of this product. This product is covered by the OSHA Hazard Communication Standard and this document has been prepared in accordance with requirements of this standard. All abbreviated terms used in this MSDS are further described in Section 16.

Section 1 - Chemical Product / Company Information

This Material Safety Data Sheet is available in Canadian French and Hispanic American Spanish upon request.
Esta hoja de datos de la seguridad de los materiales está disponible en francés canadiense y en español a su solicitud.
Los Datos de Serguridad del Producto pueden obtenerse en Espanol si lo riquiere.

Product Name: Alex Plus Acrylic Latex Caulk Plus Silicone - All Colors

Revision Date: 04/21/2005

Product UPC Number: 18103 18118 18120 18122 18124 18126 18128 18130 18134 18136 18139 18152 18172 18656 30108 35000 35004 35006 35008 35010 35012 35014 74225 74230 74241 74243 74250 74254 74256 74258 74260 74270 74275 76250

Supercedes: 12/05/2002

Product Use/Class: Latex Caulk

MSDS Number: 00010002001

Manufacturer:
DAP Inc.
2400 Boston Street Suite 200
Baltimore, MD 21224-4723
888-327-8477 (non-emergency matters)

Section 2 - Composition / Information On Ingredients

Chemical Name	CASRN	WT%	ACGIH TWA	ACGIH STEL	ACGIH CEIL	OSHA TWA	OSHA STEL	OSHA CEIL	Skin
Calcium carbonate	1317-65-3	40-70	10 MGM3	N.E.	N.E.	5 MGM3	N.E.	N.E.	No
Ester Branched & Linear(C7&C9)	PHTHALATE ESTER	1-5	N.E.	N.E.	N.E.	N.E.	N.E.	N.E.	No
Titanium dioxide	13463-67-7	0.1-1.0	10 MGM3	N.E.	N.E.	15 MGM3	N.E.	N.E.	No
Carbon Black	1333-86-4	0.0-1.5	3.5 MGM3	N.E.	N.E.	3.5 MGM3	N.E.	N.E.	No
Silica, crystalline	14808-60-7	0.1-1.0	0.05 MGM3	N.E.	N.E.	(10 ÷ % SiO2) / 2 MGM3	N.E.	N.E.	No
Ethylene glycol	107-21-1	0.1-1.0	N.E.	N.E.	100 MGM3	N.E.	N.E.	N.E.	No
Ammonia	7664-41-7	<0.010	25 PPM	35 PPM	N.E.	50 PPM	N.E.	N.E.	No
Formaldehyde	50-00-0	<0.02	N.E.	N.E.	0.3 PPM	0.75 PPM	2 PPM	N.E.	No
Ethyl acrylate	140-88-5	<0.009	5 PPM	15 PPM	N.E.	25 PPM	N.E.	N.E.	Yes
Acetaldehyde	75-07-0	<0.002	N.E.	N.E.	25 PPM	200 PPM	N.E.	N.E.	No
Acrylonitrile	107-13-1	<0.0003	2 PPM	N.E.	N.E.	2 PPM	10 PPM	N.E.	Yes

Exposure Notes:

107-13-1 Acrylonitrile is a specially regulated substance for which an OSHA chemical-specific exposure standard exits. Detailed information regarding this substance may be found in 29 CFR 1910.1045. Medical surveillance information regarding this substance may be found in Appendix C to 29 CFR 1910.1045.

50-00-0 Formaldehyde is a specially regulated substance for which an OSHA chemical-specific exposure standard exits. Detailed information regarding this substance may be found in 29 CFR 1910.1048. Medical surveillance information regarding this substance may be found in Appendix C to 29 CFR 1910.1048.

Important: Listed Permissible Exposure Levels (PEL) are from the U.S. Dept. of Labor OSHA Final Rule Limits (CFR 29 1910.1000); these limits may vary between states.

Note: An employee's skin exposure to substances having a "YES" in the "SKIN" column in the table above shall be prevented or reduced to the extent necessary under the circumstances through the use of gloves, coveralls, goggles or other appropriate personal protective equipment, engineering controls or work practices

Section 3 - Hazards Identification

Emergency Overview: A colored paste product. WARNING! Harmful if swallowed or absorbed through the skin. May cause eye, skin, nose, throat and respiratory tract irritation. This product contains ethylene glycol.

Refer to other MSDS sections for other detailed information.

Effects Of Overexposure - Eye Contact: May cause eye irritation.

Effects Of Overexposure - Skin Contact: Harmful if absorbed through the skin. May cause sensitization by skin contact. May cause skin irritation and/or dermatitis.

Effects Of Overexposure - Inhalation: Harmful if inhaled. May cause irritation of respiratory tract. Prolonged, repeated, or high exposures may cause weakness and depression of the central nervous system. Inhalation of vapors may cause irritation of the nose, throat, lungs and respiratory tract.

Effects Of Overexposure - Ingestion: Harmful if swallowed.

Effects Of Overexposure - Chronic Hazards: Prolonged and repeated skin contact may cause irritation and possibly dermatitis. Repeated or prolonged exposure may cause respiratory system damage. Overexposure may cause kidney, cardiovascular, skin and liver damage.

Formaldehyde vapor is a known animal carcinogen according to OSHA and NTP and is considered possibly carcinogenic to humans by inhalation. The International Agency for Research on Cancer considers formaldehyde to be a human carcinogen.
Ethylene Glycol may cause kidney and liver damage upon prolonged and repeated overexposures. Studies have shown that repeated inhalation of ethylene glycol has produced adverse cardiovascular changes in laboratory animals. Ethylene glycol has been shown to cause birth defects in laboratory animals.

Primary Route(s) Of Entry: Skin Contact, Inhalation, Eye Contact

Medical Conditions which May be Aggravated by Exposure: None known.

Section 4 - First Aid Measures

First Aid - Eye Contact: In case of contact, immediately flush eyes with large quantities of water for at least 15 minutes until irritation subsides. Get medical attention immediately.

First Aid - Skin Contact: Wash off immediately with soap and plenty of water for at least 15 minutes. Get medical aid if symptoms persist. Remove and wash contaminated clothing.

First Aid - Inhalation: If inhaled, remove to fresh air. If breathing is difficult, leave the area to obtain fresh air. If continued breathing difficulty is experienced, get medical attention immediately.

First Aid - Ingestion: If swallowed, DO NOT INDUCE VOMITING. Get medical attention immediately.

Note to Physician: None.

COMMENTS: Call Medical Emergency at 1-800-327-3874 if any irritation or complication arises from any of the above routes of entry.

Section 5 - Fire Fighting Measures

Flash Point, F: Greater than 200 degrees Fahrenheit
Method: (Seta Closed Cup)

Lower Explosive Limit, %: Not Established
Upper Explosive Limit, %: Not Established

Extinguishing Media: Carbon Dioxide, Dry Chemical, Foam, Water Fog

Unusual Fire And Explosion Hazards: No special protective measures against fire required.

Special Firefighting Procedures: Wear self-contained breathing apparatus pressure-demand (NIOSH approved or equivalent) and full protective gear. Use water spray to cool exposed surfaces.

Section 6 - Accidental Release Measures

Steps To Be Taken If Material Is Released Or Spilled: Wear proper protective equipment as specified in Section 8. Use absorbent material or scrape up dried material and place in container.

Section 7 - Handling And Storage

Handling: KEEP OUT OF REACH OF CHILDREN! DO NOT TAKE INTERNALLY. Do not breathe vapors. Use only with adequate ventilation. Wash thoroughly after handling. Avoid breathing vapor and contact with eyes, skin and clothing. Open all windows and doors or use other means to ensure cross-ventilation and fresh air entry during application and drying. Odor is not an adequate warning for hazardous conditions.

Storage: Close container after each use. Store containers away from excessive heat and freezing. Do not store at temperatures above 120 degrees F. Store away from caustics and oxidizers.

Section 8 - Exposure Controls / Personal Protection

Precautionary Measures: Please refer to other sections and subsections of this MSDS.

Engineering Controls: Good general ventilation should be sufficient to control airborne levels. Ensure adequate ventilation, especially in confined areas. Local ventilation of emission sources may be necessary to maintain ambient concentrations below recommended exposure limits.

Respiratory Protection: In case of insufficient ventilation, wear suitable respiratory equipment. A NIOSH-approved air purifying respirator with an organic vapor cartridge or canister may be necessary under certain circumstances where airborne concentrations are expected to exceed exposure limits. A respiratory protection program that meets the OSHA 1910.134 and ANSI Z88.2 requirements must be followed whenever workplace conditions warrant a respirator's use.

Skin Protection: Rubber gloves.

Eye Protection: Goggles or safety glasses with side shields.

Other protective equipment: Not required under normal use.

Hygienic Practices: Remove and wash contaminated clothing before re-use. Wash hands before breaks and at the end of workday.

Section 9 - Physical And Chemical Properties

Boiling Range:	210 – 220 ºF	**Vapor Density:**	Heavier Than Air
Odor:	Very Slight Ammonia	**Odor Threshold:**	Not Established
Appearance:	Colored	**Evaporation Rate:**	Slower Than n-Butyl Acetate
Solubility in H2O:	Not Established	**Specific Gravity:**	1.69
Freeze Point:	Not Established	**pH:**	Between 7.0 and 12.0
Vapor Pressure:	Not Established	**Viscosity:**	Not Established
Physical State:	Paste		

When reported, vapor pressure of this product has been calculated theoretically based on its constituent makeup and has not been determined experimentally.

(See section 16 for abbreviation legend)

Section 10 - Stability And Reactivity

Conditions To Avoid: Excessive heat and freezing.

Incompatibility: Incompatible with strong bases and oxidizing agents.

Hazardous Decomposition Products: Normal decomposition products, i.e., COx, NOx.

Hazardous Polymerization: Hazardous polymerization will not occur under normal conditions.

Stability: Stable under recommended storage conditions.

Section 11 - Toxicological Information

Product LD50: Not Established **Product LC50:** Not Established

CASRN	Chemical Name	LD50	LC50	WT%
PHTHALATE ESTER	Ester Branched & Linear (C7&C9)	Oral Rat: 10 mg/kg	----------	1-5
107-21-1	Ethylene glycol	Rat:4700 mg/kg	Rat:10876 mg/kg	0.1-1.0
7664-41-7	Ammonia	----------	Rat:2000 ppm/4H	<0.010
50-00-0	Formaldehyde	----------	Rat:203 mg/m3	<0.02
140-88-5	Ethyl acrylate	----------	Rat:1414 ppm/4H	<0.009
75-07-0	Acetaldehyde	----------	Rat:13300 ppm/4H	<0.002
107-13-1	Acrylonitrile	Oral Rat:78 mg/kg	Rat:425 ppm/4H	<0.0003

Carcinogenicity:

CAS No.	Chemical Name	ACGIH	OSHA	IARC	NTP	WT%
13463-67-7	Titanium dioxide	-----	-----	Classification not possible from current data.	-----	0.1-1.0
14808-60-7	Silica, crystalline	Suspected human carcinogen.	-----	-----	Known carcinogen.	0.1-1.0
50-00-0	Formaldehyde	Suspected human carcinogen.	Potential cancer hazard.	Human carcinogen.	Anticipated carcinogen.	<0.02
140-88-5	Ethyl acrylate	-----	-----	Possible carcinogen.	-----	<0.009
75-07-0	Acetaldehyde	Confirmed animal carcinogen with unknown relevance to humans.	-----	Possible carcinogen.	Anticipated carcinogen.	<0.002
107-13-1	Acrylonitrile	Confirmed animal carcinogen with unknown relevance to humans.	Cancer hazard.	Possible carcinogen.	Anticipated carcinogen.	<0.0003
79-06-1	Acrylamide	Confirmed animal carcinogen with unknown relevance to humans.	-----	Probable carcinogen.	Anticipated carcinogen.	<0.0001

Significant Data with Possible Relevance to Humans: This product contains trace amounts of free formaldehyde. OSHA and NTP identify formaldehyde as a potential carcinogen. IARC identifies formaldehyde as a human carcinogen. Formaldehyde has been shown to cause mutations in a variety of in-vitro test systems, the significance of which to humans is unknown. In a two-year inhalation study, rats showed carcinogenic effects in the respiratory system at 15 ppm of formaldehyde. There should be minimal risk when used with ventilation adequate to keep the atmospheric concentration of formaldehyde below the recommended exposure limits. Maintain adequate ventilation to prevent exposure above current OSHA / ACGIH exposure limits. Workplace monitoring of the air to define formaldehyde exposure levels may be necessary.
This product contains trace amounts of acrylonitrile. It is exempt from the OSHA acrylonitrile standard 29 CFR 1910.1045, paragraph (a) (2) (ii). Acrylonitrile has been classified by IARC as possibly carcinogenic to humans, by OSHA as carcinogenic and by NTP as reasonably anticipated to be a human carcinogen.

Section 12 - Ecological Information

Ecological Information: Ecological injuries are not known or expected under normal use.

Section 13 - Disposal Information

Disposal Information: Dispose of material in accordance with all federal, state and local regulations. State and Local regulations/restrictions are complex and may differ from Federal regulations. Responsibility for proper waste disposal is with the owner of the waste.

EPA Waste Code if Discarded (40 CFR Section 261): None

Section 14 - Transportation Information

DOT Proper Shipping Name:	Not Regulated	**Packing Group:**	N.A.
DOT Technical Name:	N.A.	**Hazard Subclass:**	N.A.
DOT Hazard Class:	N.A.	**DOT UN/NA Number:**	N.A.

Note: The shipping information provided is applicable for domestic ground transport only. Different categorization may apply if shipped via other modes of transportation and/or to non-domestic destinations.

Section 15 - Regulatory Information

CERCLA - SARA Hazard Category:

This product has been reviewed according to the EPA 'Hazard Categories' promulgated under Sections 311 and 312 of the Superfund Amendment and Reauthorization Act of 1986 (SARA Title III) and is considered, under applicable definitions, to meet the following categories:

Immediate Health Hazard, Chronic Health Hazard

SARA Section 313:

This product contains the following substances subject to the reporting requirements of Section 313 of Title III of the Superfund Amendment and Reauthorization Act of 1986 and 40 CFR part 372:

Chemical Name	CAS Number	WT%
Ethylene glycol	107-21-1	0.5-1.5

Toxic Substances Control Act:

All ingredients in this product are either on TSCA inventory list, or otherwise exempt.

This product contains the following chemical substances subject to the reporting requirements of TSCA 12(B) if exported from the United States:

None

U.S. State Regulations:

New Jersey Right-to-Know:

The following materials are non-hazardous, but are among the top five components in this product:

Chemical Name	CAS Number	WT%
Non-Hazardous Polymer	Proprietary	10-30
Water	7732-18-5	10-30

Pennsylvania Right-to-Know:

The following non-hazardous ingredients are present in the product at greater than 3%:

Chemical Name	CAS Number	WT%
Non-Hazardous Polymer	Proprietary	10-30
Water	7732-18-5	10-30

California Proposition 65:

Warning: The following ingredients present in the product are known to the State of California to cause cancer:

Chemical Name	CAS Number	Definition	Date Listed	WT%
Silica, crystalline	14808-60-7	Carcinogenic.	Listed: October 1, 1988	0.1-1.0
Formaldehyde	50-00-0	Carcinogenic.	Listed: January 1, 1988	<0.02
Ethyl acrylate	140-88-5	Carcinogenic.	Listed: July 1, 1989	<0.009
Acetaldehyde	75-07-0	Carcinogenic.	Listed: April 1, 1988	<0.002
Acrylonitrile	107-13-1	Carcinogenic.	Listed: July 1, 1987	<0.0003
Acrylamide	79-06-1	Carcinogenic.	Listed: January 1, 1990	<0.0001

Warning: The following ingredients present in the product are known to the State of California to cause birth defects or other reproductive harm:

None

Section 16 - Other Information

HMIS Ratings:

Health: 1 Flammability: 1 Reactivity: 0 Personal Protection: B

VOLATILE ORGANIC COMPOUNDS, GR/LTR: 39.1 LB/GAL: 0.3 WT%: 1.700

REASON FOR REVISION: Periodic Update

Legend:

N.A. – Not Applicable	ACGIH – American Conference of Governmental Industrial Hygienists
N.E. – Not Established	SARA – Superfund Amendments and Reauthorization Act of 1986
N.D. – Not Determined	NJRTK – New Jersey Right-to-Know Law
VOC – Volatile Organic Compound	OSHA – Occupational Safety and Health Administration
PEL – Permissible Exposure Limit	HMIS – Hazardous Materials Identification System
TLV – Threshold Limit Value	NTP – National Toxicology Program
STEL – Short Term Exposure Limit	CEIL – Ceiling Exposure Limit
LD50 – Lethal Dose 50	LC50 – Lethal Concentration 50
F – Degree Fahrenheit	C – Degree Celsius
MSDS – Material Safety Data Sheet	CASRN – The Chemical Abstracts Service Registry Number

DAP believes the data and statements contained herein are accurate as of the date hereof. They are offered in good faith as typical values and not as a product specification. **NO WARRANTY OF MERCHANTABILITY, WARRANTY OF FITNESS FOR ANY PARTICULAR PURPOSE OR ANY OTHER WARRANTY, EXPRESS OR IMPLIED, IS MADE WITH REGARD TO THE INFORMATION HEREIN PROVIDED OR THE PRODUCT TO WHICH THE INFORMATION REFERS.** Since this document is intended only as a guide to the appropriate use and precautionary handling of the referenced product by a properly trained person, it is therefore the responsibility of the user to (i) review the recommendations with due consideration for the specific context of the intended use and (ii) determine if they are appropriate.

<End of MSDS>

SPECIFICATION SECTION

DIVISION 8 - DOORS AND WINDOWS

TRADEWOOD
windows and doors inc.

ARCHITECTURAL WOOD WINDOWS & DOORS

7 WRIGHT STREET, ST.CATHARINES, ONTARIO, CANADA, L2P 3J2, PHONE (905) 641-4949, FAX (905) 641-2340, TOLL FREE 1-800-410-0268

CUSTOMER APPROVAL BY:

DATE APPROVED:

FILE NAME: LFH01

REV. 1

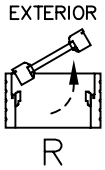

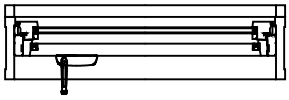

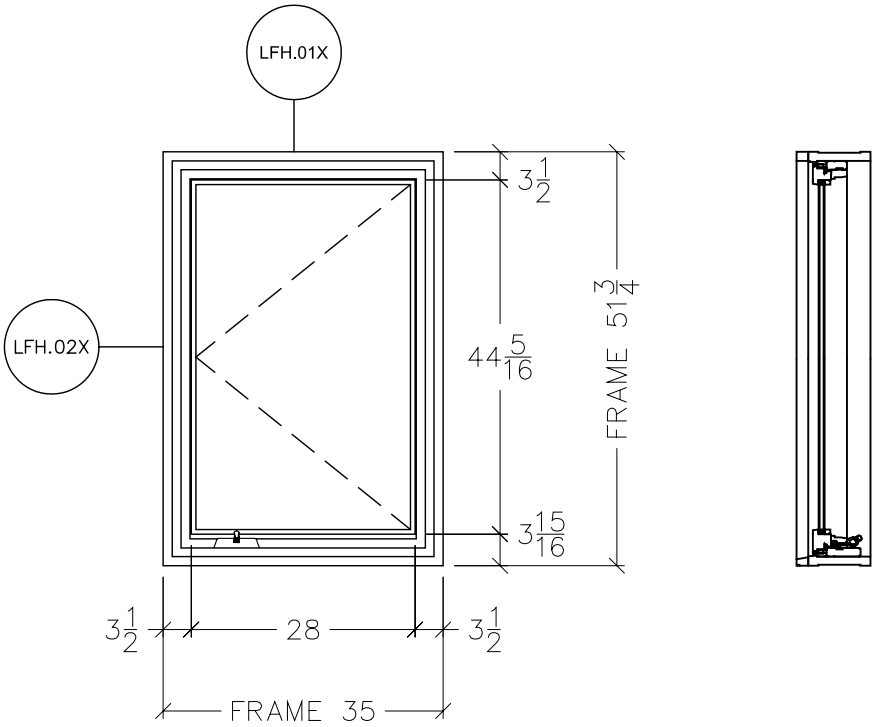

THE ELEVATION ABOVE IS VIEWED FROM THE INTERIOR

FINISH STAINED INTERIOR & EXTERIOR 4 COATS OF SIKKENS	BRICKMOULD APPLIED	GLASS 3/4" INSUL GLASS LOW E ARGON BLACK SUPERSPACER/TAPE	HARDWARE TRUTH MIRAGE LOCK TRUTH ROTO OPERATOR CHESTNUT BRONZE FINISH
MATERIAL DOUGLAS FIR FRAME AND SASH	JAMB 9 1/4" OPERATION HINGE RIGHT	SCREEN NONE	R.O. 36" x 52 3/4"

STYLE: OUTSWING CONTEMPORARY CASEMENT

CODE: TYPE A ROOM: WORKSTATION

DWG DESCRIPTION:
LEAF HOUSE
UNIVERSITY OF MARYLAND

UNIT # LFH 01	QTY: 1	SCALE: 1 : 24	DATE: 07FEB07
		DRAWN BY: RF	FILE LOCATION: \LFH-1\
FILE NAME: LFH01	REV. 1		

TRADEWOOD
windows and doors inc.

ARCHITECTURAL WOOD WINDOWS & DOORS

7 WRIGHT STREET, ST.CATHARINES, ONTARIO, CANADA, L2P 3J2, PHONE (905) 641-4949, FAX (905) 641-2340, TOLL FREE 1-800-410-0268

CUSTOMER APPROVAL BY:

DATE APPROVED:

FILE NAME: LFH02

REV. 1

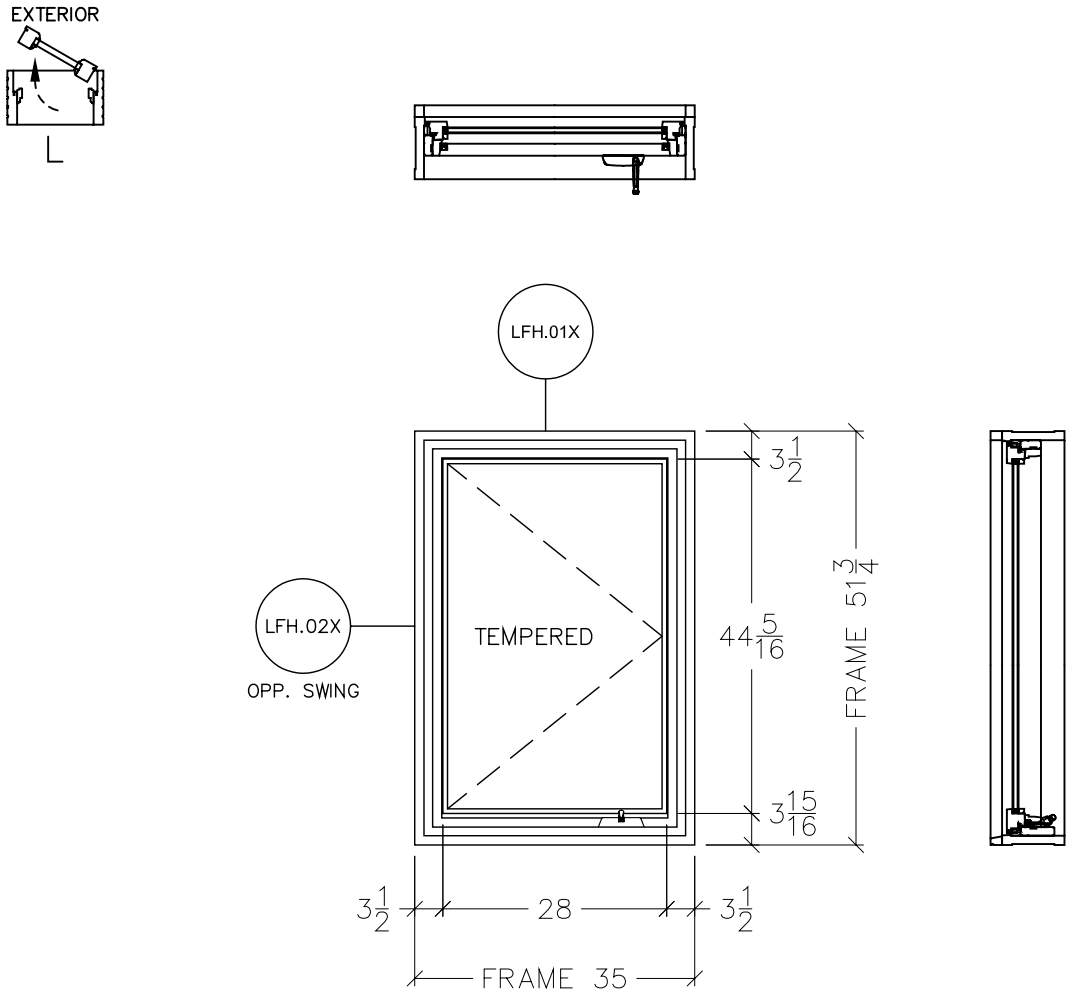

THE ELEVATION ABOVE IS VIEWED FROM THE INTERIOR

FINISH STAINED INTERIOR & EXTERIOR 4 COATS OF SIKKENS	BRICKMOULD APPLIED	GLASS 3/4" INSUL GLASS – TEMPERED LOW E ARGON BLACK SUPERSPACER/TAPE	HARDWARE TRUTH MIRAGE LOCK TRUTH ROTO OPERATOR CHESTNUT BRONZE FINISH
MATERIAL DOUGLAS FIR FRAME AND SASH	JAMB 9 1/4" OPERATION HINGE LEFT	SCREEN NONE	R.O. 36" x 52 3/4"
STYLE OUTSWING CONTEMPORARY CASEMENT		DWG DESCRIPTION: LEAF HOUSE UNIVERSITY OF MARYLAND	
CODE TYPE A ROOM BATH			
UNIT # LFH 02	QTY: 1	SCALE: 1 : 24	DATE: 07FEB07
		DRAWN BY: RF	FILE LOCATION: \LFH-1\
		FILE NAME: LFH02	REV. 1

TRADEWOOD
windows and doors inc.

ARCHITECTURAL WOOD WINDOWS & DOORS

7 WRIGHT STREET, ST.CATHARINES, ONTARIO, CANADA, L2P 3J2, PHONE (905) 641-4949, FAX (905) 641-2340, TOLL FREE 1-800-410-0268

CUSTOMER APPROVAL BY:

DATE APPROVED:

FILE NAME: LFH03

REV.

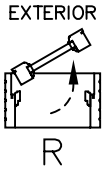

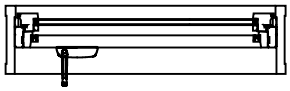

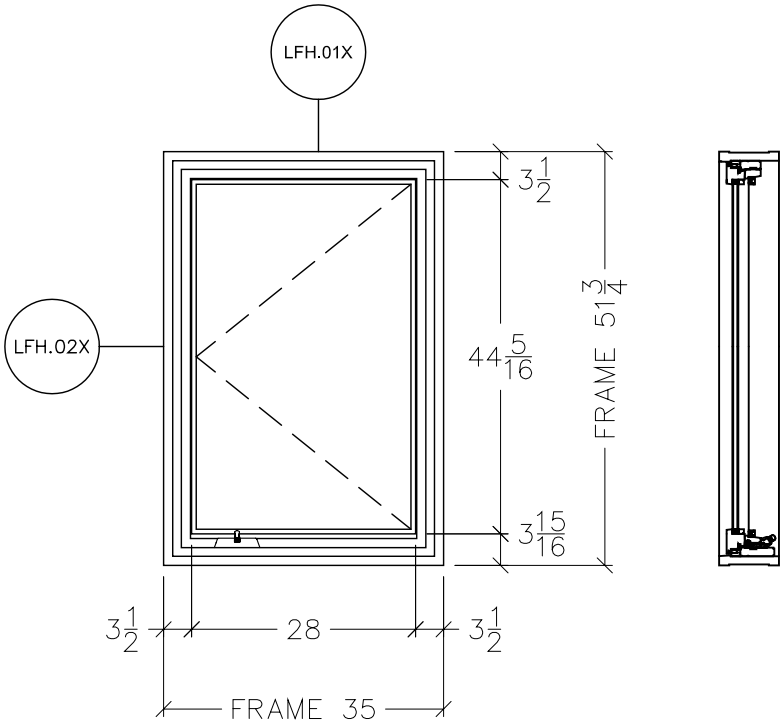

THE ELEVATION ABOVE IS VIEWED FROM THE INTERIOR

FINISH STAINED INTERIOR & EXTERIOR 4 COATS OF SIKKENS	BRICKMOULD APPLIED	GLASS 3/4" INSUL GLASS LOW E ARGON BLACK SUPERSPACER/TAPE	HARDWARE TRUTH MIRAGE LOCK TRUTH ROTO OPERATOR CHESTNUT BRONZE FINISH
MATERIAL DOUGLAS FIR FRAME AND SASH	JAMB 9 1/4" OPERATION HINGE LEFT	SCREEN NONE	R.O. 36" x 52 3/4"
STYLE OUTSWING CONTEMPORARY CASEMENT		DWG DESCRIPTION: LEAF HOUSE UNIVERSITY OF MARYLAND	
CODE TYPE A ROOM BED			
UNIT # LFH 03	QTY: 1	SCALE: 1 : 24	DATE: 25JAN07
		DRAWN BY: RF	FILE LOCATION: \LFH-1\
		FILE NAME: LFH03	REV.

TRADEWOOD
windows and doors inc.

ARCHITECTURAL WOOD WINDOWS & DOORS

7 WRIGHT STREET, ST.CATHARINES, ONTARIO, CANADA, L2P 3J2, PHONE (905) 641-4949, FAX (905) 641-2340, TOLL FREE 1-800-410-0268

CUSTOMER APPROVAL BY:

DATE APPROVED:

FILE NAME: LFH04

REV. 1

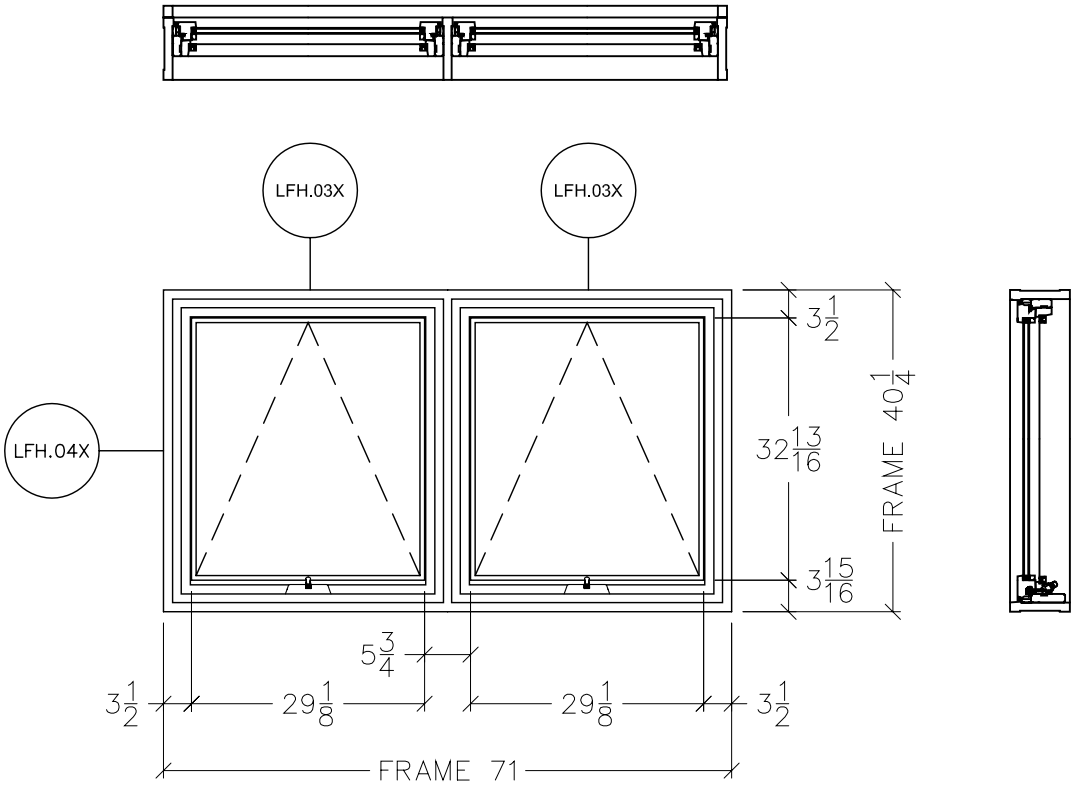

THE ELEVATION ABOVE IS VIEWED FROM THE INTERIOR

FINISH STAINED INTERIOR & EXTERIOR 4 COATS OF SIKKENS	BRICKMOULD APPLIED	GLASS 3/4" INSUL GLASS LOW E ARGON BLACK SUPERSPACER/TAPE	HARDWARE TRUTH MIRAGE LOCK TRUTH ROTO OPERATOR CHESTNUT BRONZE FINISH
MATERIAL DOUGLAS FIR FRAME AND SASH	JAMB 9 1/4" OPERATION AWNING	SCREEN NONE	R.O. 69 3/4" x 41 1/4"

STYLE 2 ELEMENT CONTEMPORARY AWNING

CODE TYPE B ROOM KITCHEN

UNIT # LFH 04

QTY: 1

DWG DESCRIPTION:
LEAF HOUSE
UNIVERSITY OF MARYLAND

SCALE: 1 : 24

DATE: 14FEB07

FILE NAME: LFH04

REV. 1

DRAWN BY: RF

FILE LOCATION: \LFH-1\

TRADEWOOD
windows and doors inc.

ARCHITECTURAL WOOD WINDOWS & DOORS

7 WRIGHT STREET, ST.CATHARINES, ONTARIO, CANADA, L2P 3J2, PHONE (905) 641-4949, FAX (905) 641-2340, TOLL FREE 1-800-410-0268

CUSTOMER APPROVAL BY:

DATE APPROVED:

FILE NAME: LFH05

REV. 1

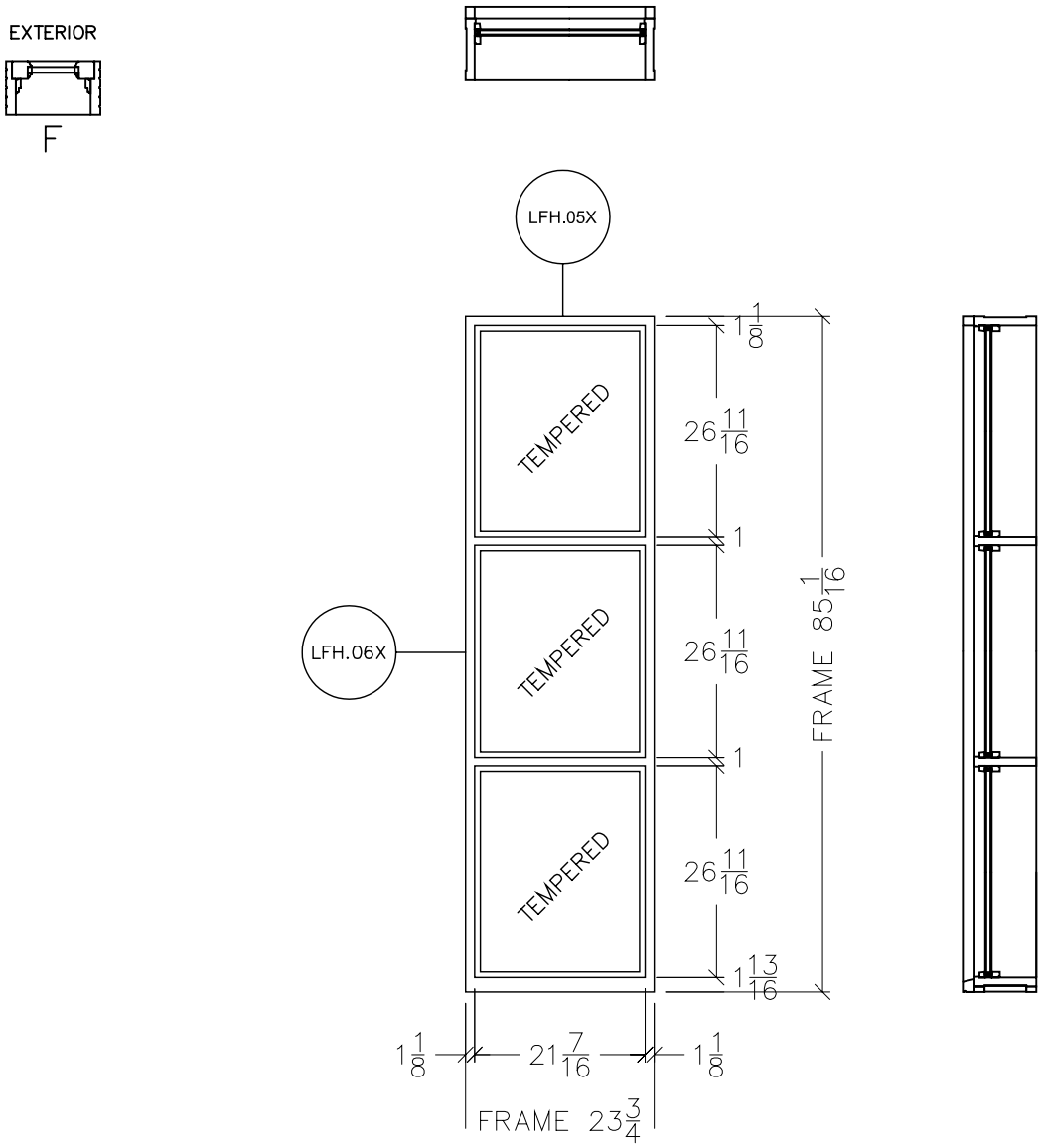

THE ELEVATION ABOVE IS VIEWED FROM THE INTERIOR

FINISH STAINED INTERIOR & EXTERIOR 4 COATS OF SIKKENS	BRICKMOULD APPLIED	GLASS 3/4" INSUL GLASS-TEMPERED LOW E ARGON BLACK SUPERSPACER/TAPE	HARDWARE NONE
MATERIAL DOUGLAS FIR FRAME	JAMB 9 1/4" OPERATION FIXED	SCREEN NONE	R.O. 24 3/4" x 85 13/16"
STYLE 3 ELEMENT CONTEMPORARY FIXED		DWG DESCRIPTION: LEAF HOUSE UNIVERSITY OF MARYLAND	
CODE TYPE C ROOM LIVING			
UNIT # LFH 05	QTY: 1	SCALE: 1 : 24 / DATE: 08FEB07 / FILE NAME: LFH05 / REV. 1	
		DRAWN BY: RF / FILE LOCATION: \LFH-1\	

TRADEWOOD
windows and doors inc.

ARCHITECTURAL WOOD WINDOWS & DOORS

7 WRIGHT STREET, ST.CATHARINES, ONTARIO, CANADA, L2P 3J2, PHONE (905) 641-4949, FAX (905) 641-2340, TOLL FREE 1-800-410-0268

CUSTOMER APPROVAL BY:

DATE APPROVED:

FILE NAME: LFH06

REV. 3

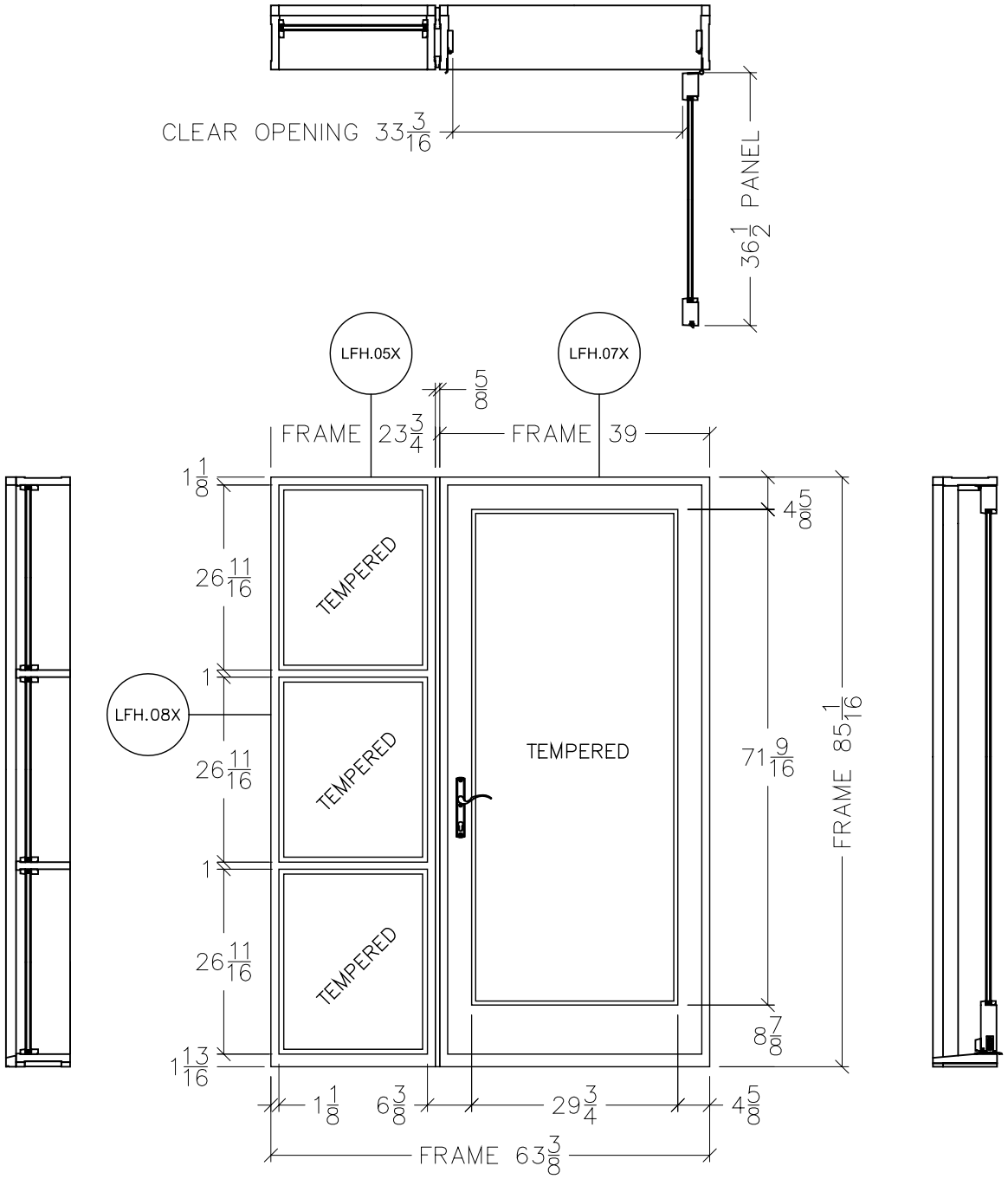

THE ELEVATION ABOVE IS VIEWED FROM THE INTERIOR

FINISH: STAINED INTERIOR & EXTERIOR 4 COATS OF SIKKENS	BRICKMOULD: APPLIED	GLASS: 3/4" INSUL GLASS–TEMPERED LOW E ARGON BLACK SUPERSPACER/TAPE	THRESHOLD: ALUMINUM
			HINGE: 4.5x4.5 FINISH: ORB
			QTY: 3/DOOR FINIAL: FLAT
			GEAR: MANUAL MULTIPOINT
			HANDLE: VERONA KEY/KNOB: KEY
MATERIAL: DOUGLAS FIR FRAME & DOOR PANEL	JAMB: 9 1/4"		HANDLE FINISH: OIL RUBBED BRONZE
	OPERATION: HINGE LEFT	SCREEN: NONE	R.O.: 64 3/8" x 85 13/16"

STYLE: INSWING DOOR WITH SIDELITE

CODE: TYPE I/C ROOM: MAIN ENTRY

UNIT # LFH 06

QTY: 1

DWG DESCRIPTION: LEAF HOUSE UNIVERSITY OF MARYLAND

SCALE: 1 : 24

DATE: 19FEB07

DRAWN BY: RF

FILE LOCATION: \LFH-1\

FILE NAME: LFH06

REV. 3

TRADEWOOD
windows and doors inc.

ARCHITECTURAL WOOD WINDOWS & DOORS

7 WRIGHT STREET, ST.CATHARINES, ONTARIO, CANADA, L2P 3J2, PHONE (905) 641-4949, FAX (905) 641-2340, TOLL FREE 1-800-410-0268

CUSTOMER APPROVAL BY:

DATE APPROVED:

FILE NAME: LFH07

REV. 1

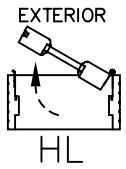

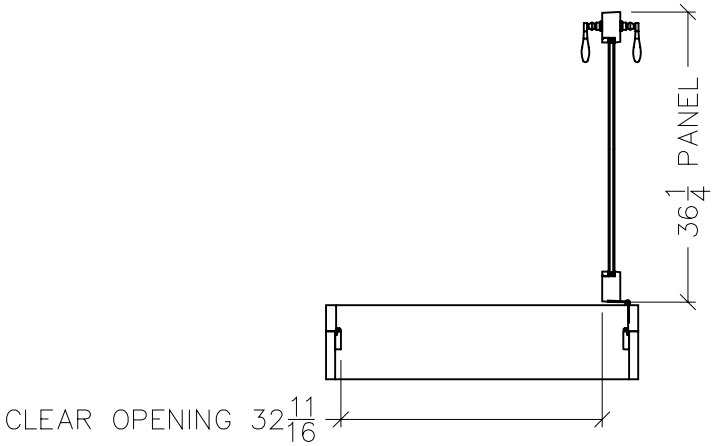

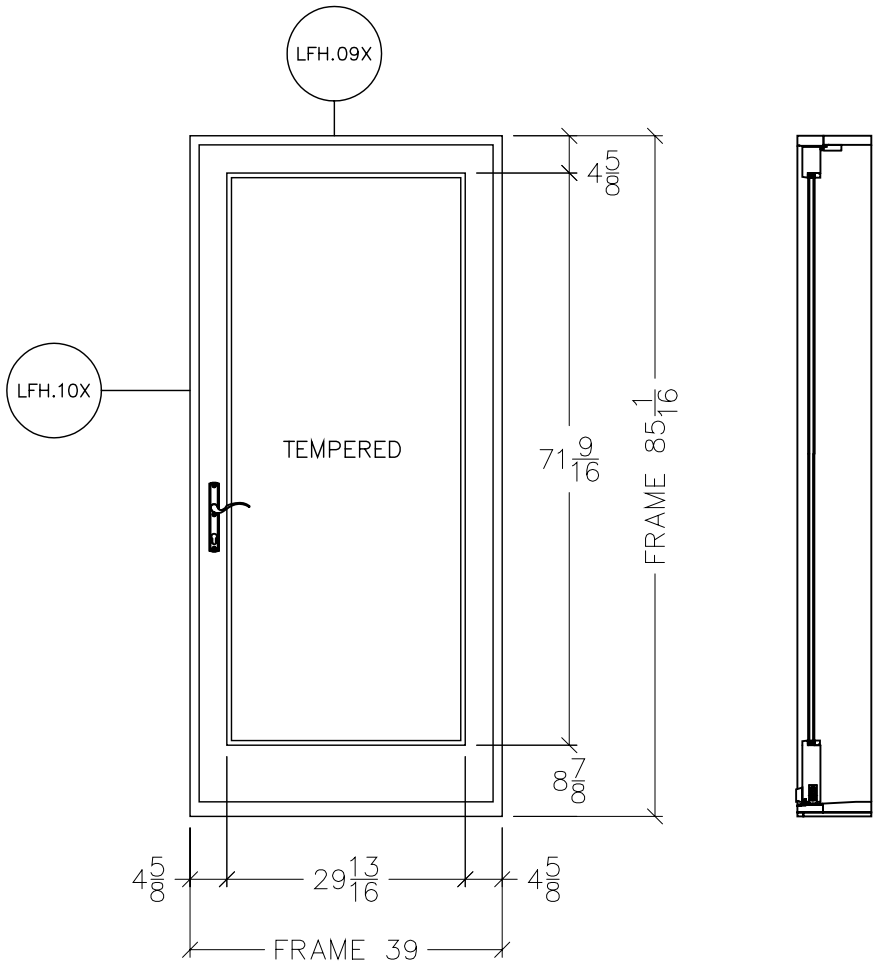

THE ELEVATION ABOVE IS VIEWED FROM THE INTERIOR

THRESHOLD	ALUMINUM
HINGE	4.5x4.5
FINISH	ORB
QTY	3/DOOR
FINIAL	FLAT
GEAR	MANUAL MULTIPOINT
HANDLE	VERONA
KEY/KNOB	KEY
HANDLE FINISH	OIL RUBBED BRONZE
R.O.	40" x 85 13/16"

FINISH: STAINED INTERIOR & EXTERIOR 4 COATS OF SIKKENS	BRICKMOULD: NONE	GLASS: 3/4" INSUL GLASS-TEMPERED LOW E ARGON BLACK SUPERSPACER/TAPE
MATERIAL: DOUGLAS FIR FRAME & DOOR PANEL	JAMB: 9 1/4"	
	OPERATION: HINGE LEFT	SCREEN: NONE

STYLE: SINGLE OUTSWING DOOR

CODE: #2/#3 ROOM: KITCHEN/BATH

UNIT # LFH 07

QTY: 2

DWG DESCRIPTION:
LEAF HOUSE
UNIVERSITY OF MARYLAND

SCALE: 1 : 24	DATE: 08FEB07	FILE NAME: LFH07	REV. 1
DRAWN BY: RF	FILE LOCATION: \LFH-1\		

TRADEWOOD
windows and doors inc.

ARCHITECTURAL WOOD WINDOWS & DOORS

7 WRIGHT STREET, ST.CATHARINES, ONTARIO, CANADA, L2P 3J2, PHONE (905) 641-4949, FAX (905) 641-2340, TOLL FREE 1-800-410-0268

CUSTOMER APPROVAL BY:

DATE APPROVED:

FILE NAME: LFH08

REV. 1

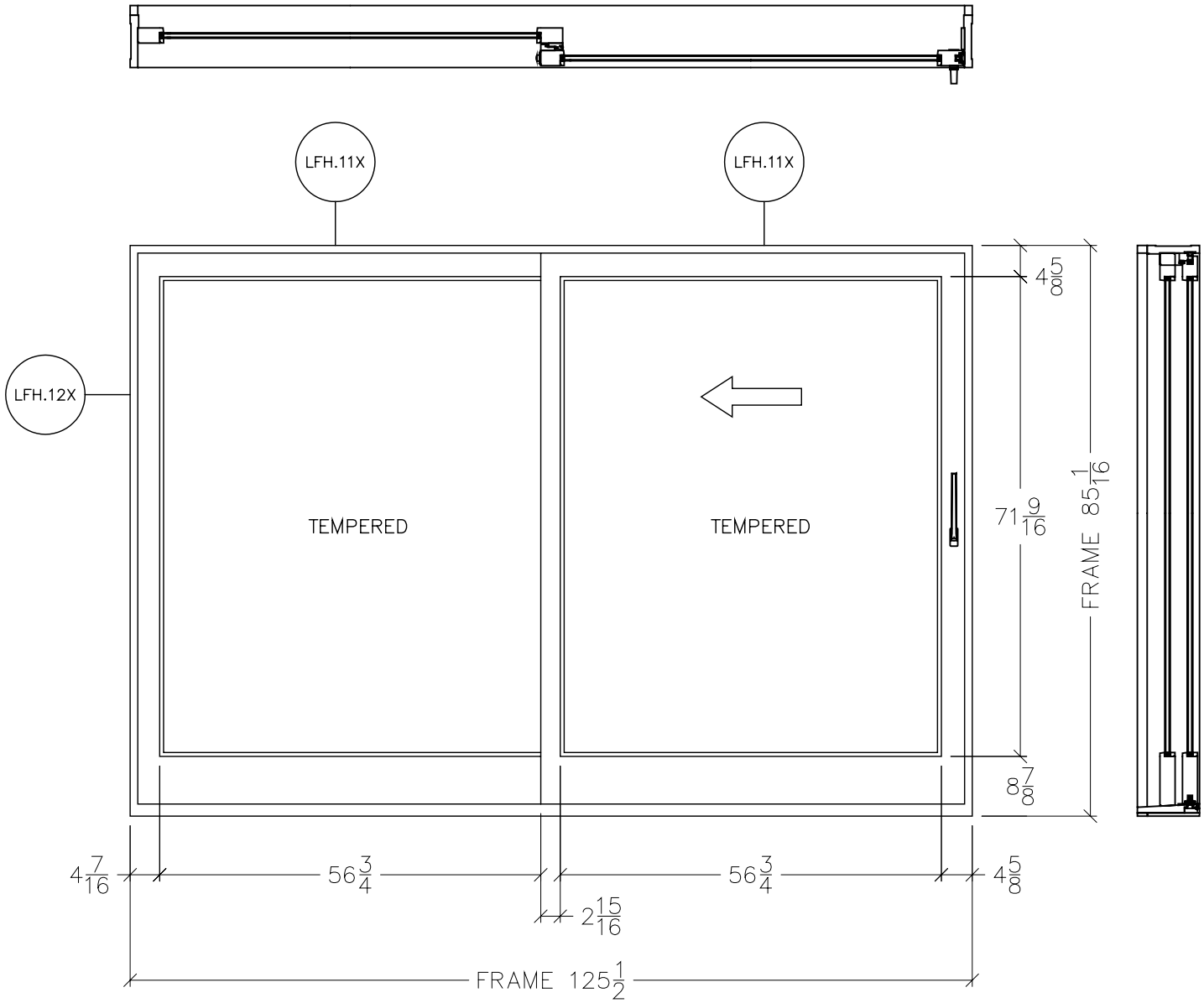

THE ELEVATION ABOVE IS VIEWED FROM THE INTERIOR

FINISH: STAINED INTERIOR & EXTERIOR 4 COATS OF SIKKENS	BRICKMOULD: APPLIED	GLASS: 3/4" INSUL GLASS-TEMPERED LOW E ARGON BLACK SUPERSPACER/TAPE	THRESHOLD: ALUMINUM
			HINGE: NONE — FINISH: N/A
			QTY: NONE — FINIAL: N/A
			GEAR: MANUAL MULTIPOINT
			HANDLE: TBA — KEY/KNOB: NONE
MATERIAL: DOUGLAS FIR FRAME & DOOR PANEL	JAMB: 9 1/4"		HANDLE FINISH: TBA
	OPERATION: LEFT ROLLING	SCREEN: NONE	R.O.: 126 1/2" x 85 13/16"

STYLE: LIFT & SLIDE DOOR

CODE: #4 — ROOM: LIVING ROOM

UNIT #: LFH 08 — QTY: 1

DWG DESCRIPTION: LEAF HOUSE UNIVERSITY OF MARYLAND

SCALE: 1 : 24 — DATE: 08FEB07 — FILE NAME: LFH08 — REV. 1

DRAWN BY: RF — FILE LOCATION: \LFH-1\

TRADEWOOD
windows and doors inc.

ARCHITECTURAL WOOD WINDOWS & DOORS

7 WRIGHT STREET, ST.CATHARINES, ONTARIO, CANADA, L2P 3J2, PHONE (905) 641-4949, FAX (905) 641-2340, TOLL FREE 1-800-410-0268

CUSTOMER APPROVAL BY:

DATE APPROVED:

FILE NAME: LFH09

REV. 1

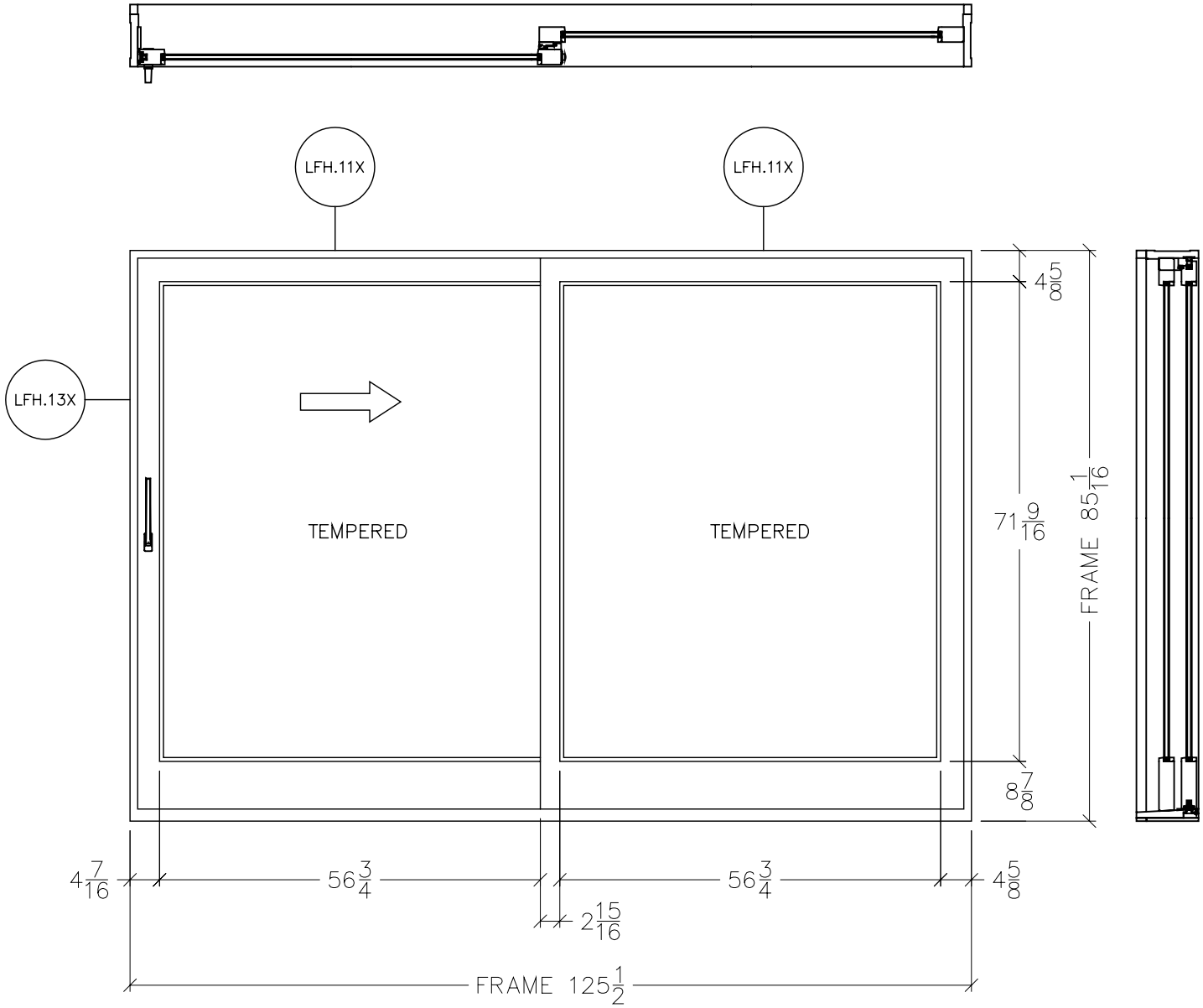

THE ELEVATION ABOVE IS VIEWED FROM THE INTERIOR

FINISH: STAINED INTERIOR & EXTERIOR 4 COATS OF SIKKENS	BRICKMOULD: APPLIED	GLASS: 3/4" INSUL GLASS-TEMPERED LOW E ARGON BLACK SUPERSPACER/TAPE	THRESHOLD: ALUMINUM
			HINGE: NONE — FINISH: N/A
			QTY: NONE — FINIAL: N/A
			GEAR: MANUAL MULTIPOINT
			HANDLE: TBA — KEY/KNOB: NONE
MATERIAL: DOUGLAS FIR FRAME & DOOR PANEL	JAMB: 9 1/4"		HANDLE FINISH: TBA
	OPERATION: RIGHT ROLLING	SCREEN: NONE	R.O.: 126 1/2" x 85 13/16"

STYLE: LIFT & SLIDE DOOR

CODE: #5 — ROOM: LIVING ROOM

UNIT #: LFH 09 — QTY: 1

DWG DESCRIPTION: LEAF HOUSE UNIVERSITY OF MARYLAND

SCALE: 1 : 24 — DATE: 08FEB07 — FILE NAME: LFH09 — REV. 1

DRAWN BY: RF — FILE LOCATION: \LFH-1\

TRADEWOOD
windows and doors inc.

ARCHITECTURAL WOOD WINDOWS & DOORS

7 WRIGHT STREET, ST.CATHARINES, ONTARIO, CANADA, L2P 3J2, PHONE (905) 641-4949, FAX (905) 641-2340, TOLL FREE 1-800-410-0268

CUSTOMER APPROVAL BY:

DATE APPROVED:

FILE NAME: LFH.01X

REV. 1

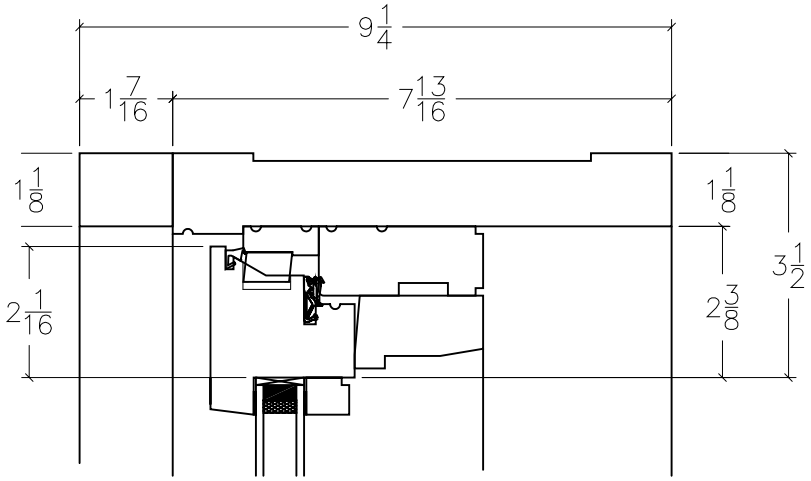

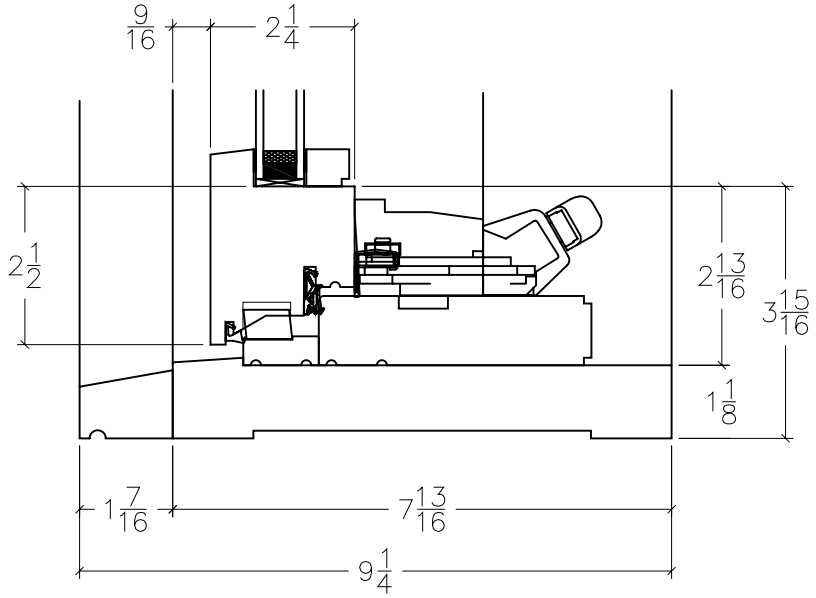

DWG DESCRIPTION:
CONTEMPORARY CASEMENT WINDOW
VERTICAL SECTION DETAILS

SCALE: 1 : 3	DATE: 07FEB07	FILE NAME: LFH.01X	REV. 1
DRAWN BY: RF	FILE LOCATION: \LFH-1\		

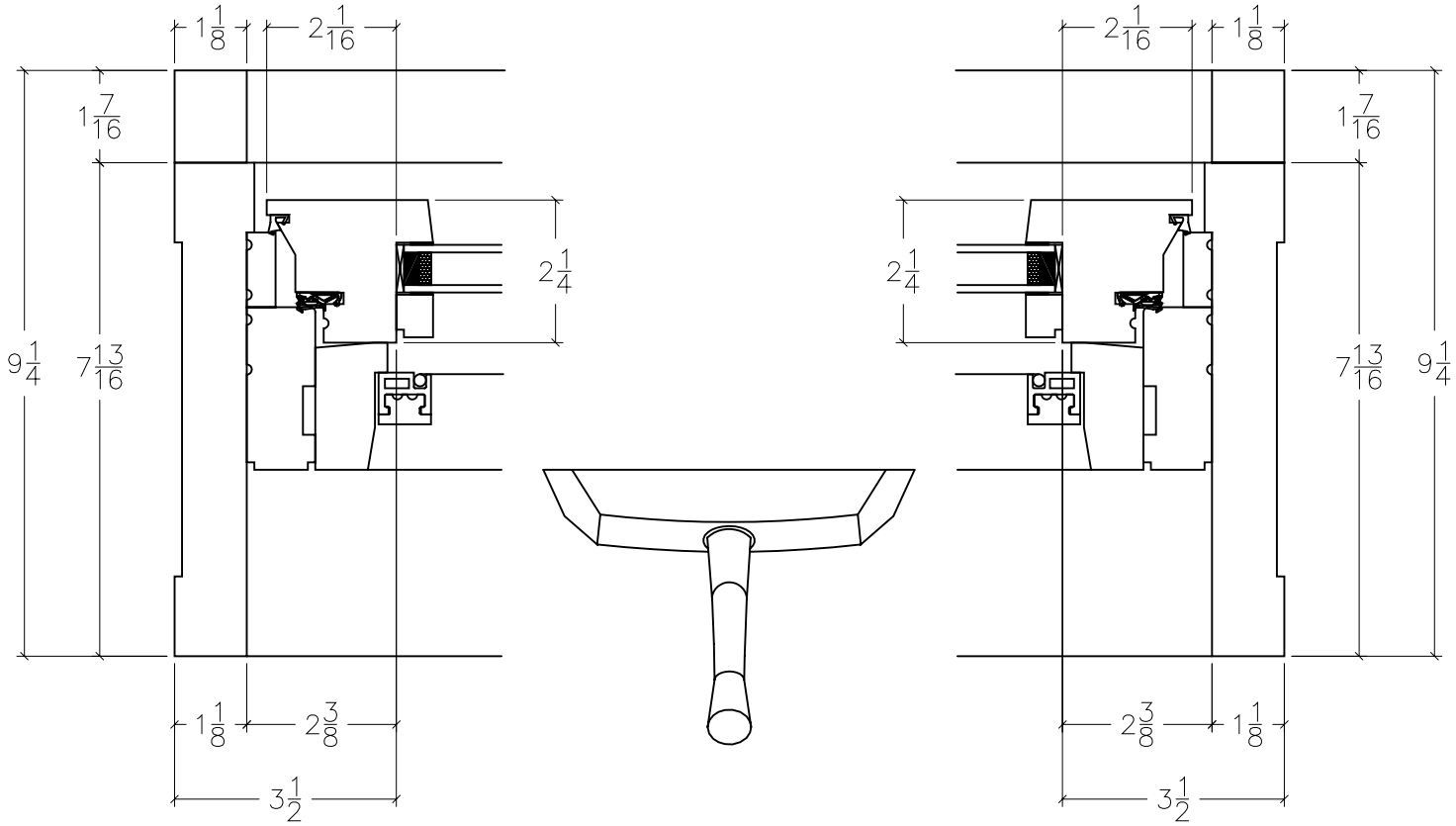

CUSTOMER APPROVAL BY: DATE APPROVED:

TRADEWOOD
windows and doors inc.

ARCHITECTURAL WOOD
WINDOWS & DOORS

7 WRIGHT STREET,
ST.CATHARINES, ONTARIO,
CANADA, L2P 3J2
PHONE (905) 641-4949
FAX (905) 641-2340
TOLL FREE 1-800-410-0268

REV: 1

FILE NAME: LFH.02X

DWG DESCRIPTION:
CONTEMPORARY OUTSWING CASEMENT
HORIZONTAL SECTION DETAILS

SCALE: 1 : 3	DATE: 07FEB07	FILE NAME: LFH.02X	REV. 1
DRAWN BY: RF	FILE LOCATION: \LFH-1\		

TRADEWOOD
windows and doors inc.

ARCHITECTURAL WOOD WINDOWS & DOORS

7 WRIGHT STREET, ST.CATHARINES, ONTARIO, CANADA, L2P 3J2, PHONE (905) 641-4949, FAX (905) 641-2340, TOLL FREE 1-800-410-0268

CUSTOMER APPROVAL BY:

DATE APPROVED:

FILE NAME: LFH.03X

REV. 1

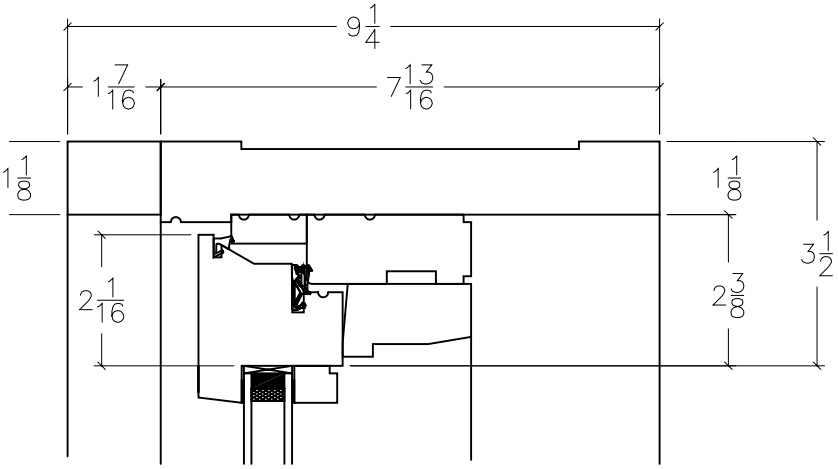

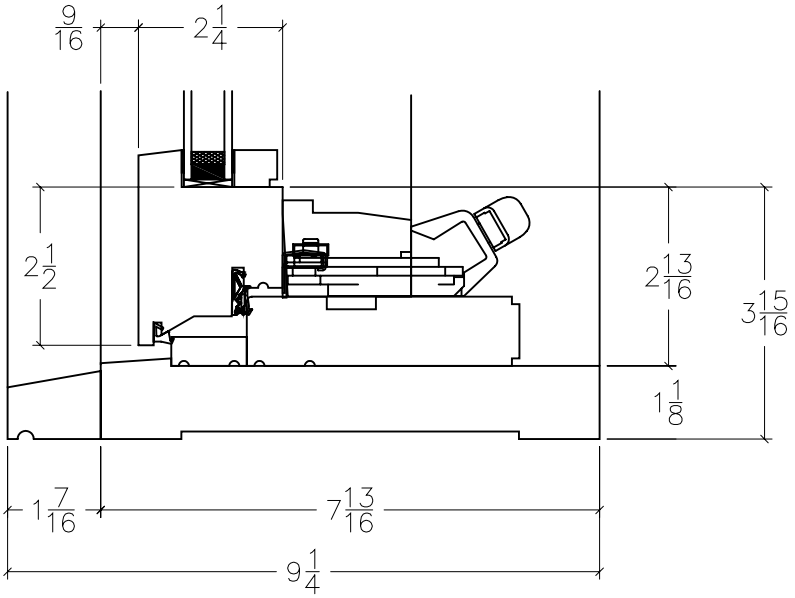

DWG DESCRIPTION:
CONTEMPORARY AWNING WINDOW
VERTICAL SECTION DETAILS

SCALE: 1 : 3	DATE: 07FEB07	FILE NAME: LFH.03X	REV. 1
DRAWN BY: RF	FILE LOCATION: \LFH-1\		

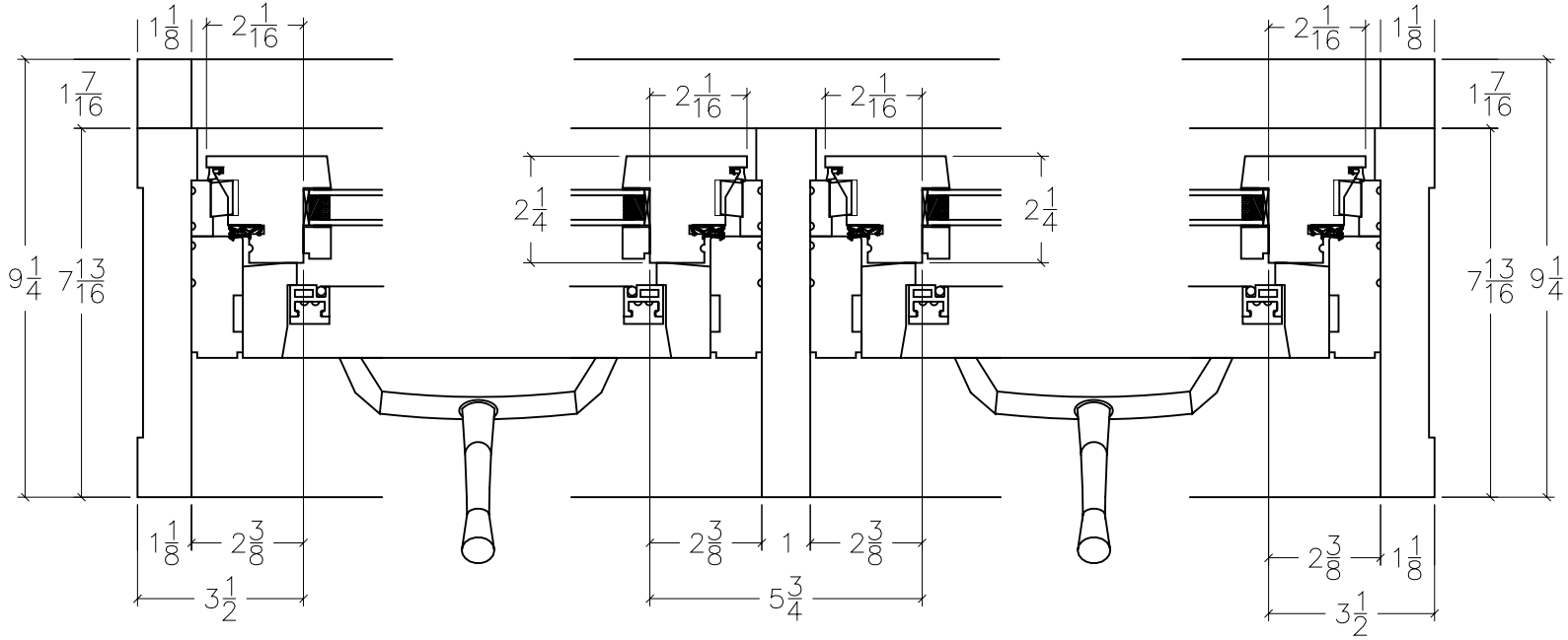

CUSTOMER APPROVAL BY: DATE APPROVED:

TRADEWOOD
windows and doors inc.

ARCHITECTURAL WOOD
WINDOWS & DOORS

7 WRIGHT STREET,
ST.CATHARINES, ONTARIO,
CANADA, L2P 3J2
PHONE (905) 641-4949
FAX (905) 641-2340
TOLL FREE 1-800-410-0268

REV.	FILE NAME:
1	LFH.04X

DWG DESCRIPTION:
CONTEMPORARY AWNING WINDOW
HORIZONTAL SECTION DETAILS

SCALE:	DATE:	FILE NAME:	REV.
1 : 4	07FEB07	LFH.04X	1
DRAWN BY: RF	FILE LOCATION: \LFH-1\		

TRADEWOOD
windows and doors inc.

ARCHITECTURAL WOOD WINDOWS & DOORS

7 WRIGHT STREET, ST.CATHARINES, ONTARIO, CANADA, L2P 3J2, PHONE (905) 641-4949, FAX (905) 641-2340, TOLL FREE 1-800-410-0268

CUSTOMER APPROVAL BY:

DATE APPROVED:

FILE NAME: LFH.05X

REV. 1

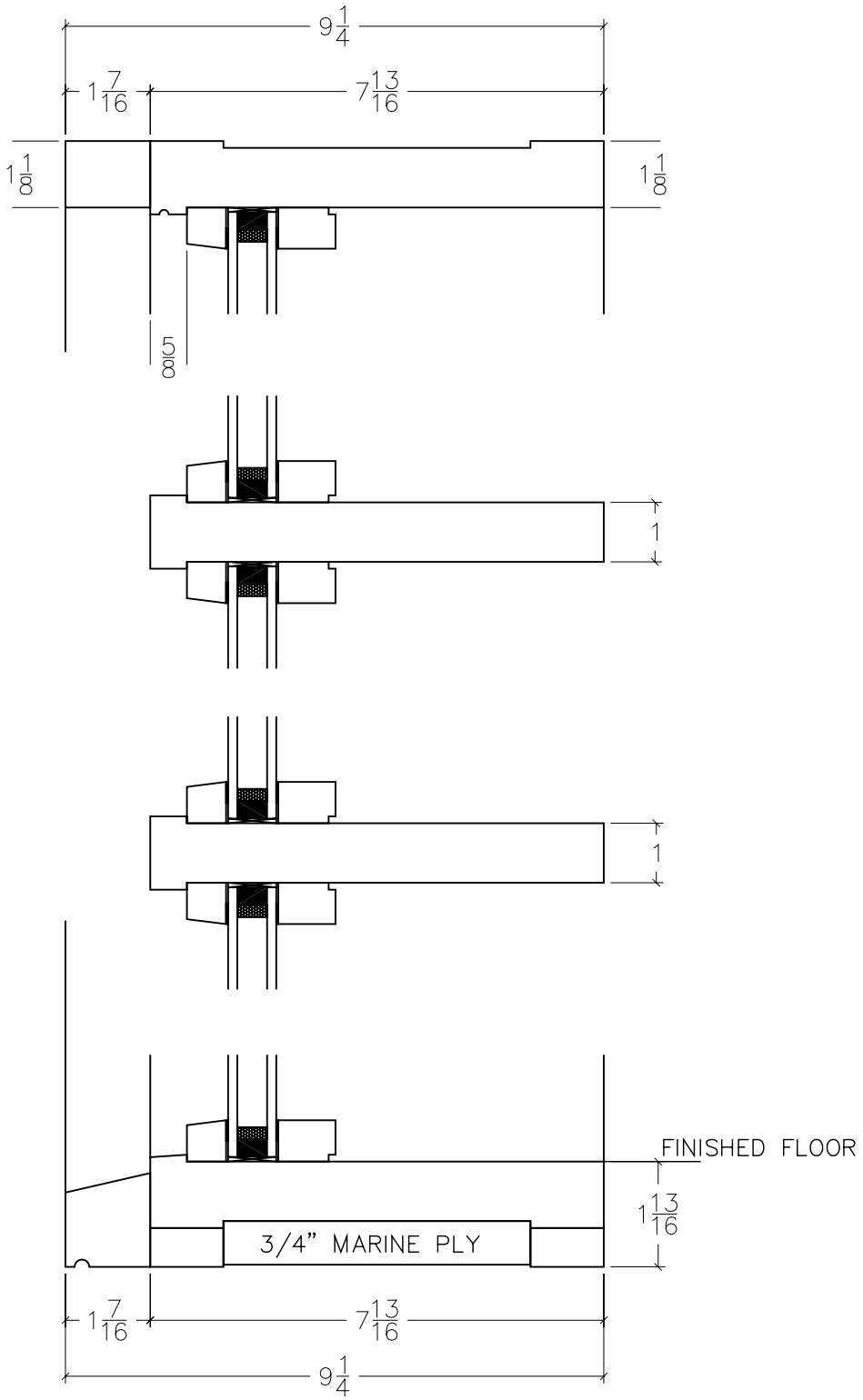

DWG DESCRIPTION:
CONTEMPORARY FIXED WINDOW
VERTICAL SECTION DETAILS

SCALE: 1 : 3	DATE: 07FEB07	FILE NAME: LFH.05X	REV. 1
DRAWN BY: RF	FILE LOCATION: \LFH-1\		

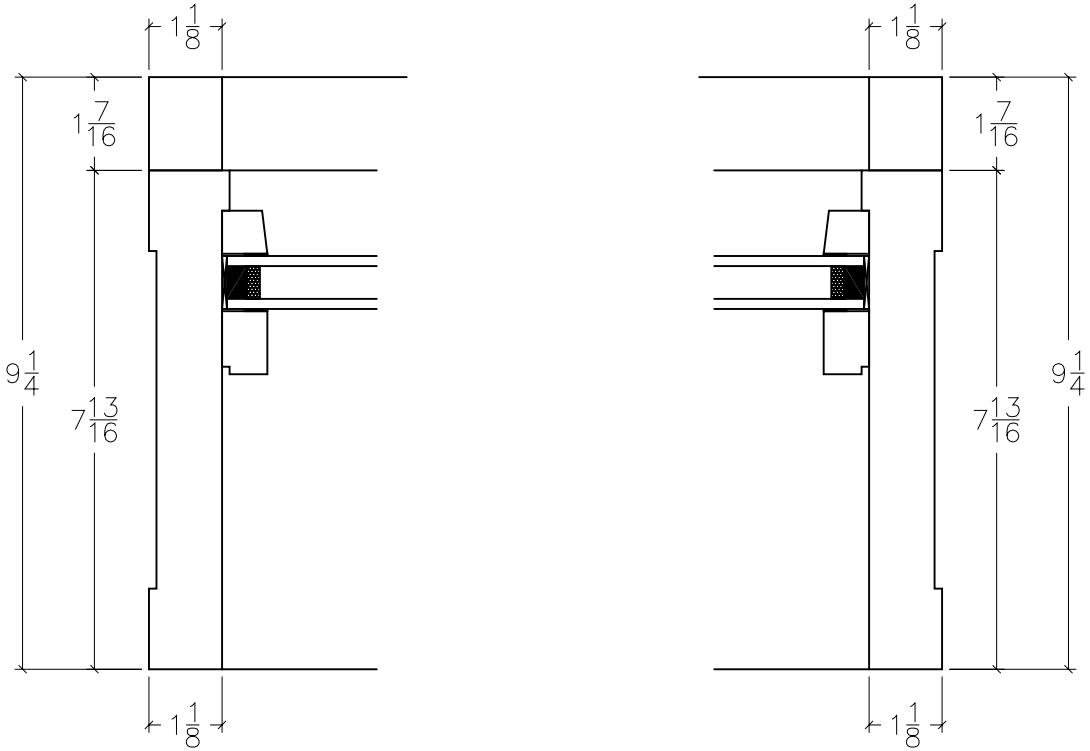

CUSTOMER APPROVAL BY: DATE APPROVED:

TRADEWOOD
windows and doors inc.
ARCHITECTURAL WOOD
WINDOWS & DOORS

7 WRIGHT STREET,
ST.CATHARINES, ONTARIO,
CANADA, L2P 3J2
PHONE (905) 641-4949
FAX (905) 641-2340
TOLL FREE 1-800-410-0268

REV.	FILE NAME:
1	LFH.06X

DWG DESCRIPTION:
CONTEMPORARY FIXED WINDOW
HORIZONTAL SECTION DETAILS

SCALE:	DATE:	FILE NAME:	REV.
1 : 3	07FEB07	LFH.06X	1
DRAWN BY: RF	FILE LOCATION: \LFH-1\		

TRADEWOOD
windows and doors inc.

ARCHITECTURAL WOOD WINDOWS & DOORS

7 WRIGHT STREET, ST.CATHARINES, ONTARIO, CANADA, L2P 3J2, PHONE (905) 641-4949, FAX (905) 641-2340, TOLL FREE 1-800-410-0268

CUSTOMER APPROVAL BY:

DATE APPROVED:

FILE NAME: LFH.07X

REV. 1

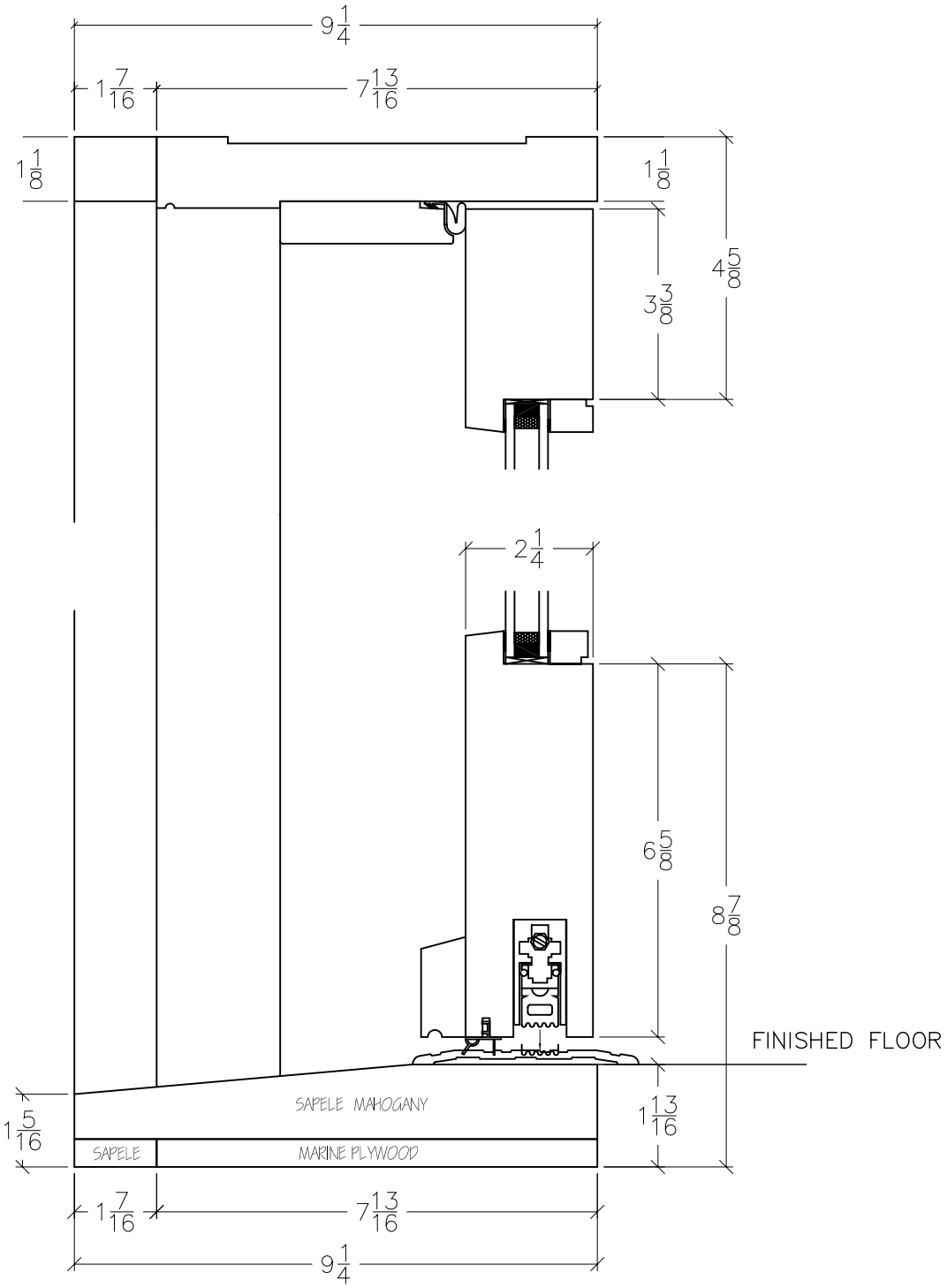

DWG DESCRIPTION:
CONTEMPORARY INSWING DOOR
VERTICAL SECTION DETAILS

SCALE: 1 : 3	DATE: 07FEB07	FILE NAME: LFH.07X	REV. 1
DRAWN BY: RF	FILE LOCATION: \LFH-1\		

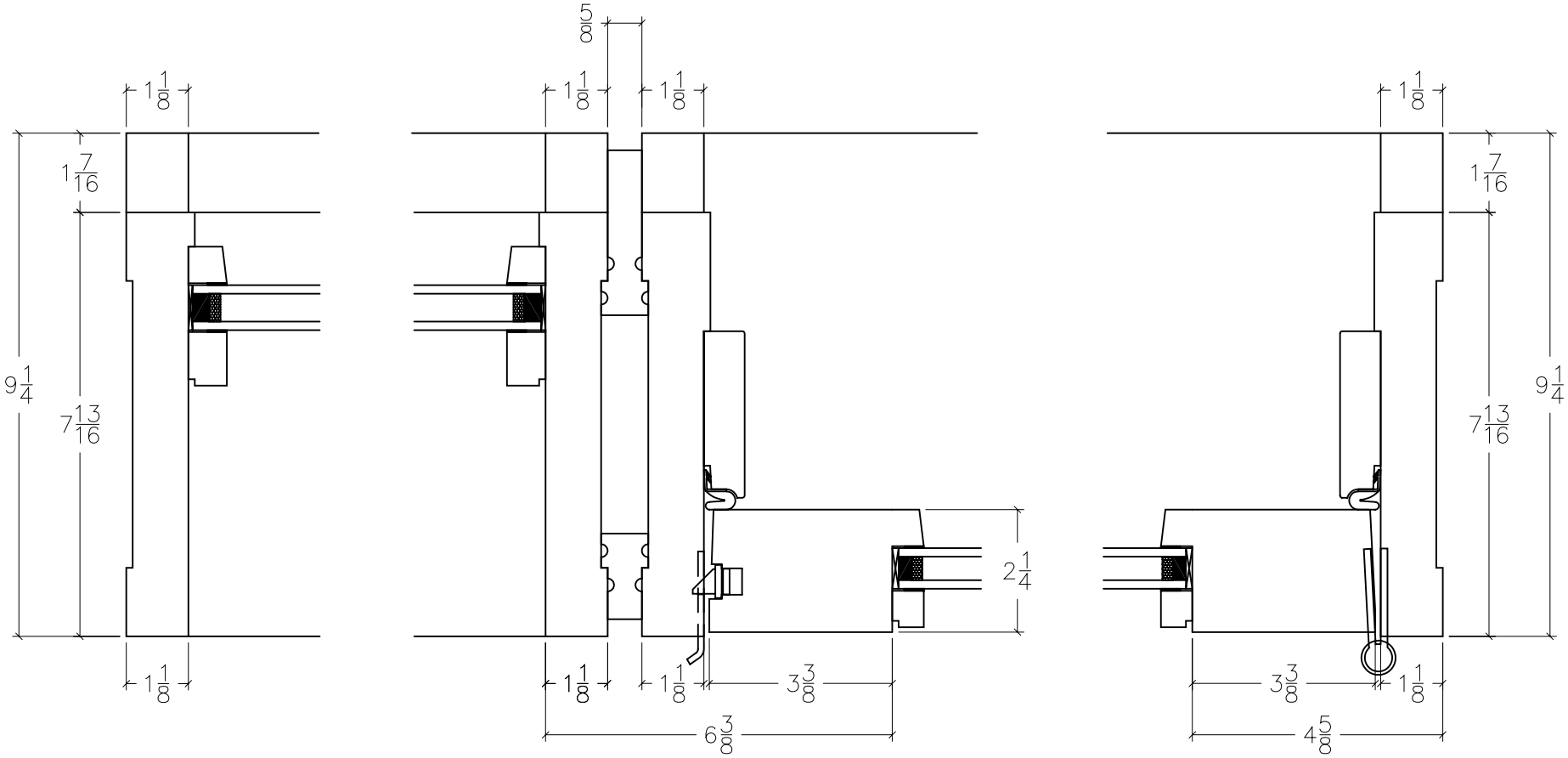

CUSTOMER APPROVAL BY: DATE APPROVED:

TRADEWOOD
windows and doors inc.

ARCHITECTURAL WOOD
WINDOWS & DOORS

7 WRIGHT STREET,
ST.CATHARINES, ONTARIO,
CANADA, L2P 3J2
PHONE (905) 641-4949
FAX (905) 641-2340
TOLL FREE 1-800-410-0268

REV.	FILE NAME:
1	LFH.08X

DWG DESCRIPTION:
CONTEMPORARY INSWING DOOR WITH SIDELITE
HORIZONTAL SECTION DETAILS

SCALE:	DATE:	FILE NAME:	REV.
1 : 3	07FEB07	LFH.08X	1
DRAWN BY: RF	FILE LOCATION: \LFH-1\		

TRADEWOOD
windows and doors inc.

ARCHITECTURAL WOOD WINDOWS & DOORS

7 WRIGHT STREET, ST.CATHARINES, ONTARIO, CANADA, L2P 3J2, PHONE (905) 641-4949, FAX (905) 641-2340, TOLL FREE 1-800-410-0268

CUSTOMER APPROVAL BY:

DATE APPROVED:

FILE NAME: LFH.09X

REV. 1

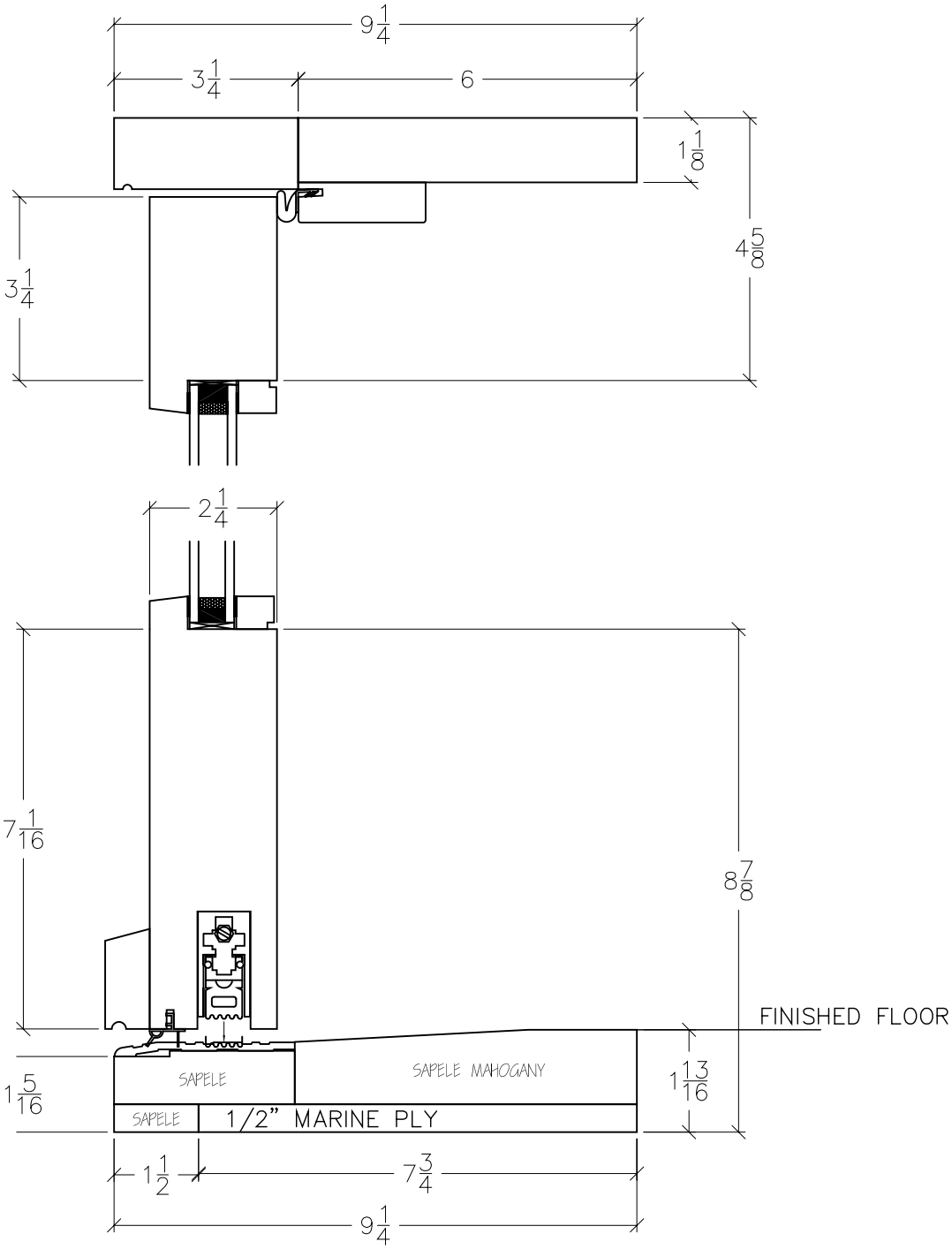

DWG DESCRIPTION:
CONTEMPORARY OUTSWING DOOR
VERTICAL SECTION DETAILS

SCALE: 1 : 3	DATE: 07FEB07	FILE NAME: LFH.09X	REV. 1
DRAWN BY: RF	FILE LOCATION: \LFH-1\		

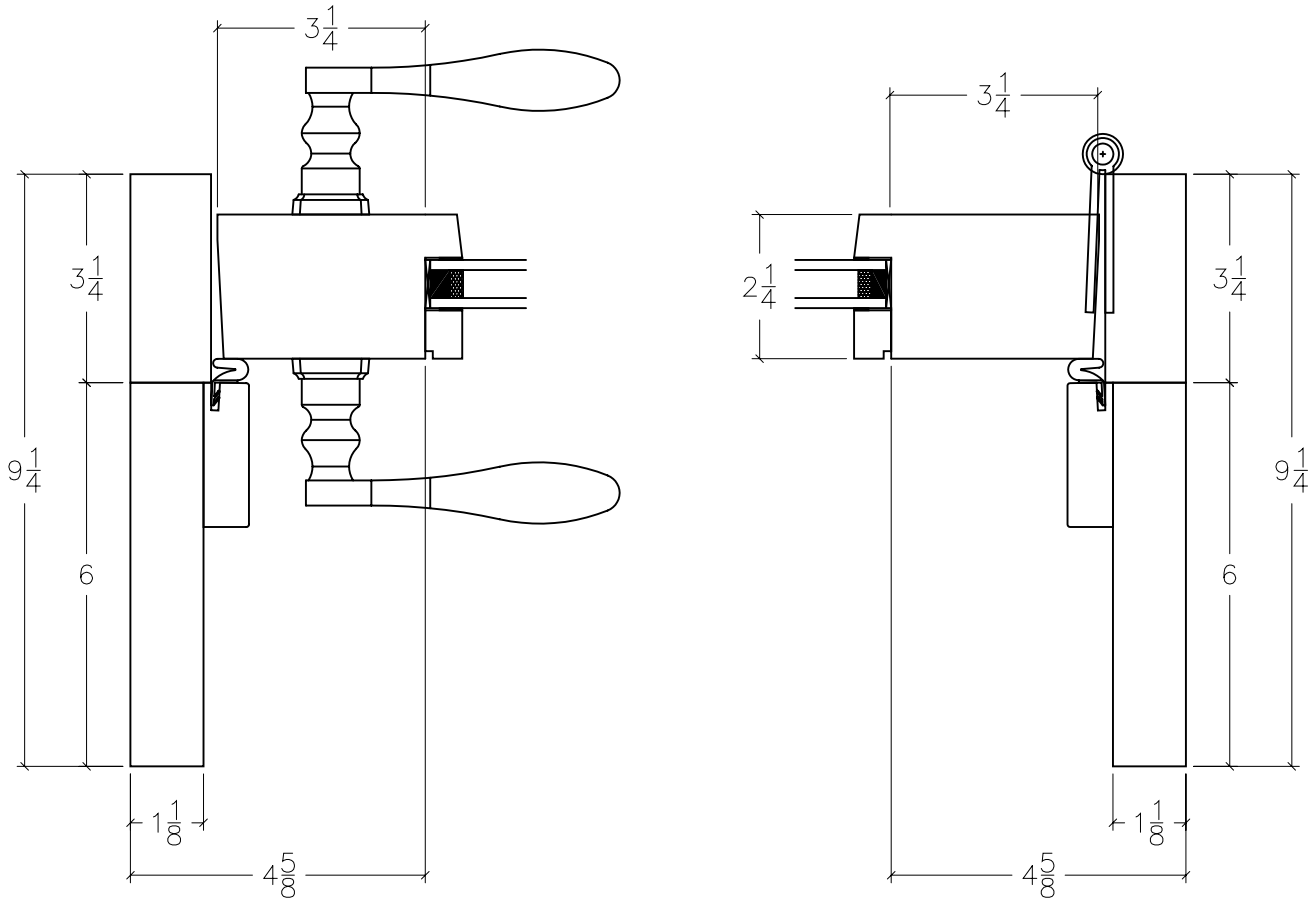

CUSTOMER APPROVAL BY: DATE APPROVED:

TRADEWOOD
windows and doors inc.

ARCHITECTURAL WOOD
WINDOWS & DOORS

7 WRIGHT STREET,
ST.CATHARINES, ONTARIO,
CANADA, L2P 3J2
PHONE (905) 641-4949
FAX (905) 641-2340
TOLL FREE 1-800-410-0268

REV.	FILE NAME:
1	LFH.10X

DWG DESCRIPTION:
CONTEMPORARY OUTSWING DOOR
HORIZONTAL SECTION DETAILS

SCALE:	DATE:	FILE NAME:	REV.
1 : 3	07FEB07	LFH.10X	1
DRAWN BY: RF	FILE LOCATION: \LFH-1\		

TRADEWOOD
windows and doors inc.

ARCHITECTURAL WOOD WINDOWS & DOORS

7 WRIGHT STREET, ST.CATHARINES, ONTARIO, CANADA, L2P 3J2, PHONE (905) 641-4949, FAX (905) 641-2340, TOLL FREE 1-800-410-0268

CUSTOMER APPROVAL BY:

DATE APPROVED:

FILE NAME: LFH.11X

REV. 1

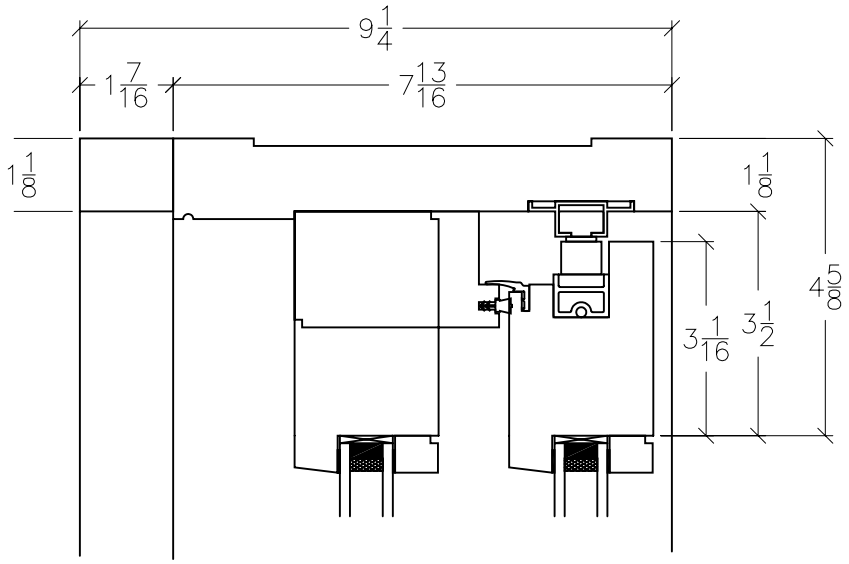

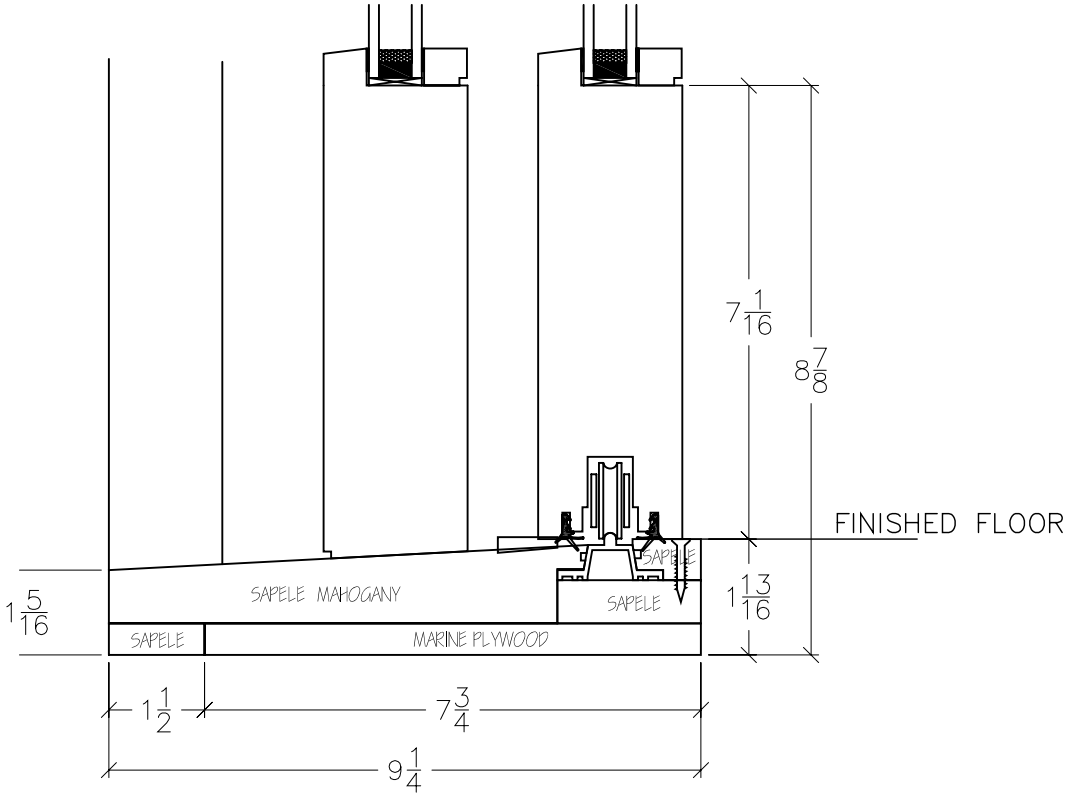

DWG DESCRIPTION:
CONTEMPORARY LIFT & SLIDE DOOR
VERTICAL SECTION DETAILS

SCALE: 1 : 3	DATE: 26JAN07	FILE NAME: LFH.11X	REV. 1
DRAWN BY: RF	FILE LOCATION: \LFH-1\		

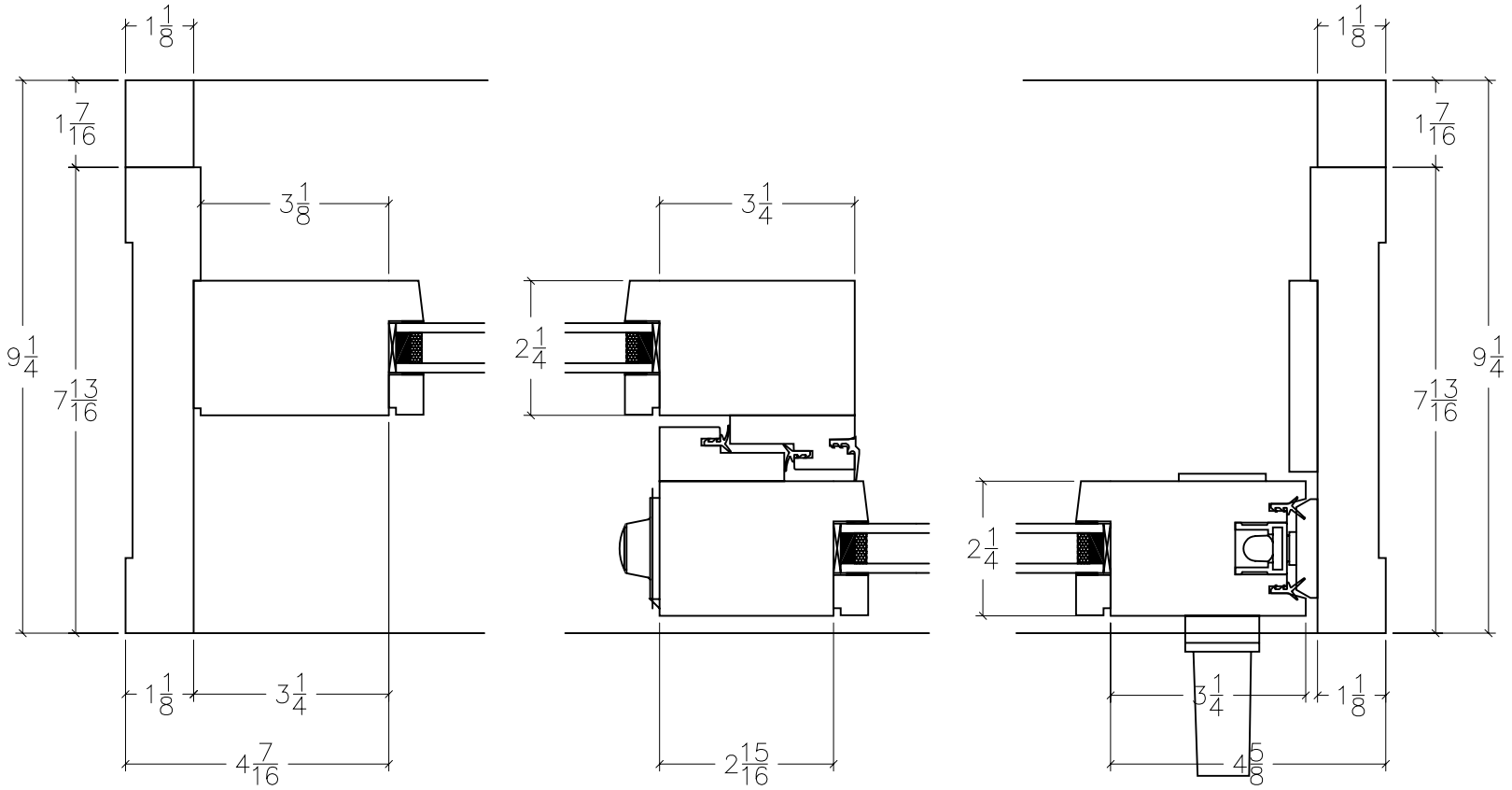

CUSTOMER APPROVAL BY: DATE APPROVED:

TRADEWOOD
windows and doors inc.

ARCHITECTURAL WOOD WINDOWS & DOORS

7 WRIGHT STREET,
ST.CATHARINES, ONTARIO,
CANADA, L2P 3J2
PHONE (905) 641-4949
FAX (905) 641-2340
TOLL FREE 1-800-410-0268

REV.	FILE NAME:
1	LFH.12X

DWG DESCRIPTION:
CONTEMPORARY LIFT & SLIDE DOOR
HORIZONTAL SECTION DETAILS

SCALE:	DATE:	FILE NAME:	REV.
1 : 3	07FEB07	LFH.12X	1
DRAWN BY: RF	FILE LOCATION: \LFH-1\		

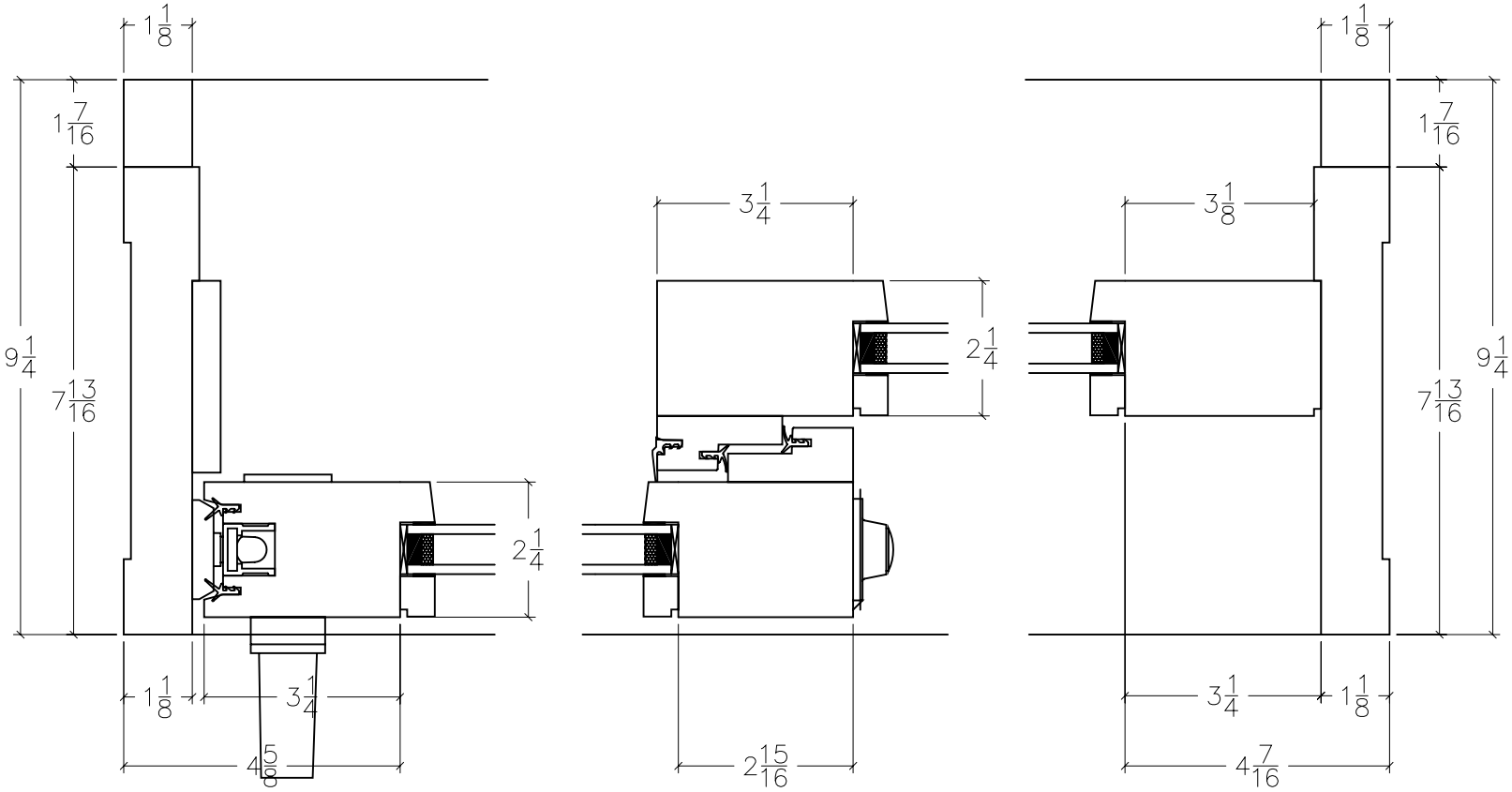

CUSTOMER APPROVAL BY: DATE APPROVED:

TRADEWOOD
windows and doors inc.

ARCHITECTURAL WOOD
WINDOWS & DOORS

7 WRIGHT STREET,
ST.CATHARINES, ONTARIO,
CANADA, L2P 3J2
PHONE (905) 641-4949
FAX (905) 641-2340
TOLL FREE 1-800-410-0268

REV.	FILE NAME:
1	LFH.13X

DWG DESCRIPTION:
CONTEMPORARY LIFT & SLIDE DOOR
HORIZONTAL SECTION DETAILS

SCALE:	DATE:	FILE NAME:	REV.
1 : 3	07FEB07	LFH.13X	1
DRAWN BY: RF	FILE LOCATION: \LFH-1\		

Polycarbonate Systems

SUPERSKY

Super Sky Products also offers the following custom and standard glass products: Hurricane and Blast-Resistant, Building Integrated Photovoltaics (BIPV) and Point Supported Glass Systems.

From conception to completion, we guarantee to provide;

- Creative design and engineering capabilities
- Strong financial resources
- Advanced CAD/CAM systems
- State-of-the-art 115,000 sq.ft. manufacturing facility
- Dedicated/knowledgeable staff
- Competitive pricing
- Timely completions
- Ten (10) year manufacturer's warranty

For additional details, specifications, photographs and information regarding local representatives, visit Super Sky Products' website at:

www.supersky.com

SUPER SKY

All photography by Photographic Images
with the exception of WMATA-Suitland Station by Progress Photo

THE EDGE®

Brookdale Center
Brooklyn Center, Minnesota
Architect: Architectural Alliance
Contractor: M. A. Mortenson Company
Area: 8,950 sq.ft. (THE EDGE®)

THE EDGE® ... is a *single layer* system that is strong, silent, leak-free and fire safe. The EDGE® skin system can be installed directly on steel supporting structures or with a self-supporting aluminum frame.

Unique Features:

- **U-Value** 0.23 to 0.52
- **Light Transmission** 12% to 80%
- **Shading Coefficient** .27 to .98
- **Available Colors** Clear, Opal, White, Bronze, Green, Venetian
- Ten (10) year manufacturer's warranty.
- Panel widths can vary up to 5'-0" for 10mm and 16mm and 4'-0" for 25mm.
- Panel lengths up to 30'-0" for 10mm, 16mm or 25mm and up to 20'-0" long for Venetian.
- Panels can be curved (cold formed) to a radius as small as 4'-8" for 10mm, 8'-0" for 16mm and 14'-0" for 25mm.
- Panels can be fabricated to any shape – not limited to rectangular shapes.
- Up to 5'-0" unsupported spanning capabilities – depending upon design load, panel width and thickness.
- Class I or II flamespread.
- Flame retardant.
- Allows for unrestricted linear/lateral panel movement without noise and oil canning.
- Can sustain high wind, gravity and snow loads.
- Impact resistance of 200 ft. lbs.
- Mechanical water seals, integral gutters and weeps allow permanent weather-proofing without wet seals.
- Floating connections relieve panel stress and improve product life without compromising weather performance.
- Polycarbonate EDGE® extrusions are sonically welded to the panel, insuring panel retention and structural performance.
- Positive mullion caps and retainers capture panels without the use of exposed fasteners.
- Continuous panels with concealed polycarbonate retention clips.

EDGE® polycarbonate panels can be filled with *Nanogel® for increased performance values. See charts at the end of this brochure.*

May contribute to your "green design" gaining LEED points.

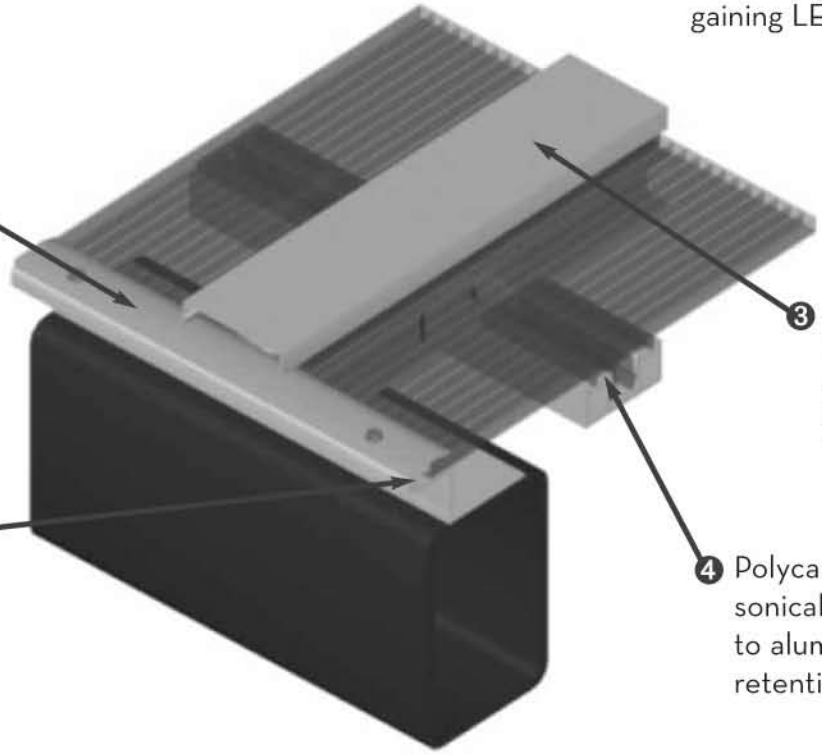

▲ **WMATA - Suitland Station**
Washington DC
Architect: Harry Weese & Associates
Contractor: Washington Metropolitan Area Transit Authority
Area: 6,800 sq.ft. (THE EDGE ®)

◀ **Philadelphia International Airport - High Speed Line Improvements**
Philadelphia, Pennsylvania
Architect: D P K & A
Contractor: Daniel J. Keating Company
Area: 14,380 sq.ft. (THE EDGE ®)

SUPERSKY

▲ **Louisiana Riverwalk-Parking Structure**
Bossier City, Louisiana
Architect: Carter & Burgess
Contractor: Walton Construction
Area: 800 sq.ft. (THE EDGE ®)

◀ **Brookdale Center**
Brooklyn Center, Minnesota
Architect: Architectural Alliance
Contractor: M. A. Mortenson Company
Area: 8,950 sq.ft. (THE EDGE ®)

SUPERSKY

◀

St. Francis Cabrini Roman Catholic Church
New Orleans, Louisiana
Architect: Archdiocese of New Orleans
Contractor: Hy-Tech Roofing Services, Inc.
Area: 300 sq.ft. (THE EDGE ®)

▼ **Amtrak - 30th Street Station**
Philadelphia, Pennsylvania
Architect: Dan Peter Kopple & Associates
Contractor: Intech Construction, Inc.
Area: 825 sq.ft. (THE EDGE ®)

Cabela's Retail, Inc.
Kansas City, Kansas
Architect: KKE Architects, Inc.
Contractor: Kraus-Anderson® Construction Company
Area: 7,870 sq.ft. (THE EDGE MAX®)

The EDGE MAX®... is a *double layer* system that offers the same features and benefits as the EDGE®, plus higher insulation value, improved shading properties and greater spanning ability.

Unique Features:

- **U-Value** 0.19 to 0.26
- **Light Transmission** 2% to 66%
- **Shading Coefficient** .14 to .94
- **Available Colors** Clear, Opal, White, Bronze, Green
- Ten (10) year manufacturer's warranty.
- Comprised of two 10mm panels.
- EDGE MAX® provides a double-layer of insulation that increases energy efficiency. Within each of the composite panels reside aluminum extrusions that allow for unsupported spans up to 17'-0".
- Panel widths can vary up to 5'-0".
- Panel length up to 30'-0".
- Panels can be curved.
- Panels can be fabricated to any shape – not limited to rectangular shapes.
- Class I or II flamespread.
- Flame retardant.
- Allows for unrestricted linear/lateral panel movement without noise and oil canning.
- Floating connections relieve panel stress and improve product life without compromising weather performance.
- Impact resistance of 200 ft. lbs.
- Can sustain high wind, gravity and snow loads.
- Mechanical water seals, integral gutters and weeps allow permanent weather-proofing without wet seals.
- Polycarbonate EDGE MAX® extrusions are sonically welded to the panel, insuring panel retention and structural performance.
- Positive mullion caps and retainers capture panels without the use of exposed fasteners.
- Continuous panels with concealed polycarbonate retention curbs.
- Panels are shop assembled for quality control and to simplify field installation.

EDGE MAX® *polycarbonate panels can be filled with Nanogel® for increased performance values. See charts at the end of this brochure.*

May contribute to your "green design" gaining LEED points.

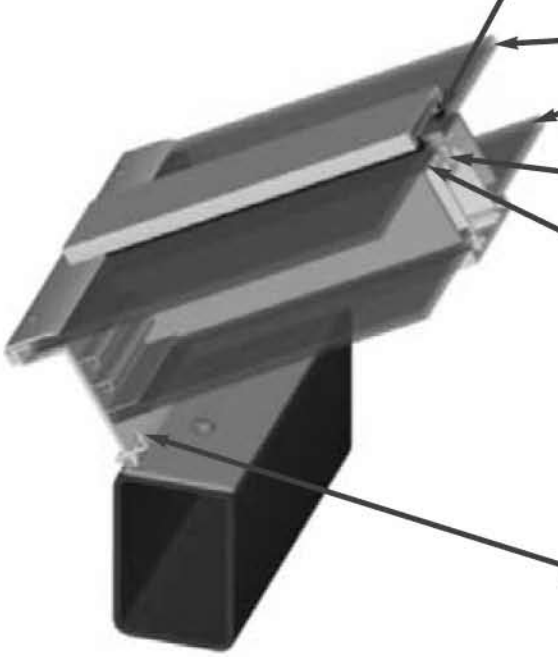

1. Continuous EPDM gaskets provide primary barrier against water infiltration.
2. Shop assembled EDGE MAX® panels, glazed into frame in one piece to accelerate field installation.
3. Internal gutter provides controlled back-up drainage of moisture within system.
4. Sonically welded polycarbonate "edger" provides continuous standing seam back-up for weather-proofing without wet seals. Also provides reinforcement of panel edges.
5. Extruded aluminum variable curb adapts to any desired pitch.

▲ **EPA National Computer Center**
Research Triangle Park, North Carolina
Architect: O'Brien / Atkins Associates
Contractor: Beers Construction - Davidson & Jones Group
Area: 3,600 sq.ft. (THE EDGE MAX® & GLASS)

▼ **Pepsi Center - Pedestrian Bridge**
Denver, Colorado
Architect: Hellmuth-Obata & Kassabaum, Inc.
Contractor: M.A. Mortenson Company
Area: 5,500 sq.ft. (THE EDGE MAX®)

Graco Riverside Office Building
Minneapolis, Minnesota
Architect: SLL/Leo A. Daly
Contractor: McGough Construction
Area: 4,815 sq.ft. (THE EDGE MAX®)

The Rhodes Building
Tacoma, Washington
Architect: McGranahan Partners
Contractor: Berschauer-Phillips Construction
Area: 13,010 sq.ft. (THE EDGE MAX®)

▲ **St. Peter & Paul Cemetery - Garden Mausoleum**
Springfield, Pennsylvania
Architect: George Donovan AIA & Associates
Contractor: Keystone Mausoleum Constructors, Inc.
Area: 2,320 sq.ft. (BDL)

▼ **Henry Ford Community College**
Dearborn, Michigan
Architect: Hobbs & Black Associates
Contractor: The Bell Company
Area: 3,260 sq.ft. (BDL)

BDL... is a *standing seam* system which incorporates polycarbonate panels and batten caps, offering an inexpensive, high performing glazing system.

Unique Features:

- **U-Value** 0.20 to 0.37
- **Light Transmission** 13% to 63%
- **Shading Coefficient** .39 to .77
- **Available Colors** Clear, Opal, Ice Mist, Bronze, Green, Blue
- Ten (10) year manufacturer's warranty.
- Thickness - 16mm.
- Width – 600mm (23-5/8").
- Panel length up to 39'-0".
- Double sided U.V. protection.
- 3-piece aluminum clip allows for easy installation and noise free movement with panel expansion.
- Can be installed with battens exposed to the exterior, or for a flush appearance, to the interior with aluminum battens.
- Impact resistance of 220 ft. lbs.

BDL *polycarbonate panels can be filled with Nanogel® for increased performance values. See charts at the end of this brochure.*

May contribute to your "green design" gaining LEED points.

▲ **Branson Junior High School**
Branson, Missouri
Architect: Sapp Design Associates, Inc., P.C.
Contractor: Architectural Building Products, Inc.
Area: 1,500 sq.ft. (BDL)

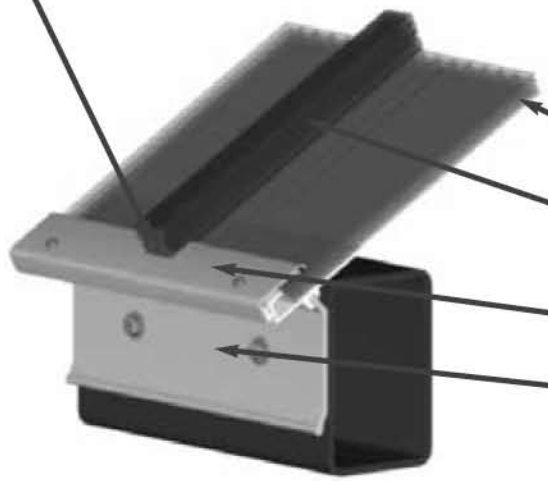

1. Clear acrylic end cap.
2. 16mm standing seam polycarbonate panel.
3. Polycarbonate batten.
4. Curb clamping angle.
5. Variable curb base.

Revolutionary ... Environmentally Friendly ... Super Insulating

SUPER SKY Polycarbonate Systems with NANOGEL® Light Diffusing Translucent Aerogel

Nanogel® Translucent Aerogel is Cabot Corporation's trade name for its family of hydrophobic silica aerogel products. Aerogel is considered the lightest and best insulating solid in the world. Nanogel is made up of 5% solids and 95% air. Translucent aerogel particles allow light to pass while serving as a highly effective thermal insulation. When placed in Super Sky's polycarbonate systems, insulation performance is maximized and resistance to condensation is improved.

BENEFITS

- Superior insulation and diffuse light-transmitting technology.
- Ability to meet stringent building codes for thermal insulation and light transmission without trade-offs.
- Improved insulation performance, reduced energy consumption and HVAC costs.
- Resistant to mold, mildew and fungus.
- Environmentally friendly.
- Reduces sound transmission.
- Moisture resistant.
- Performance will not deteriorate over time.
- Thermal insulation will not degrade over time.
- 10 year manufacturer's warranty on workmanship, color stability and leakage.

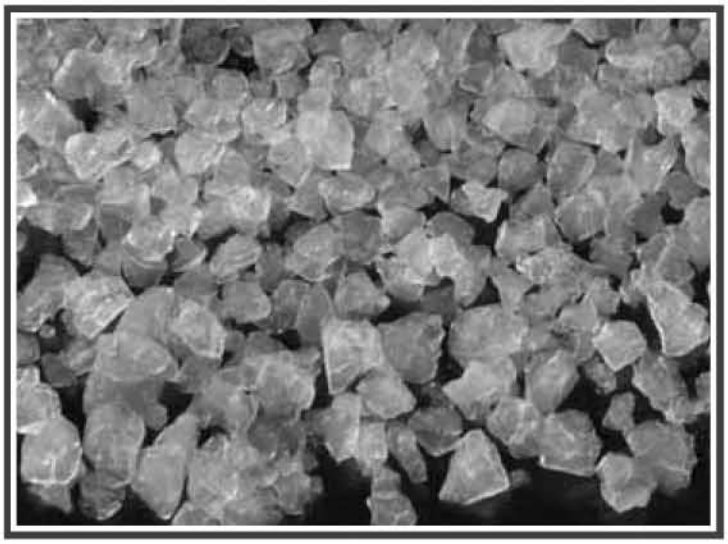

SUPER SKY'S POLYCARBONATE SYSTEMS FILLED WITH NANOGEL®

LIGHT TRANSMISSION

Nanogel's translucent, structure diffuses light evenly, preventing glare.

ACOUSTICAL INSULATION

Nanogel's structure slows down the speed of sound, reducing sound transmission.

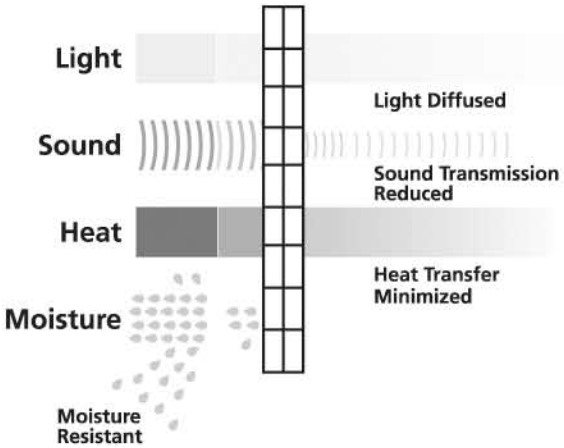

THERMAL INSULATION

Nanogel's porous structure makes it an excellent thermal insulator by significantly reducing the conduction and convection of heat.

PERFORMANCE

Nanogel's surface treatment prevents color change, resists mold and mildew, and will not have performance degradation.

Private Residence

Wayzata, Minnesota
Architect: Benigno Aguilar Design
Contractor: Ryan Companies USA, Inc.
Area: 775 sq.ft. (*Nanogel Filled* EDGE ®)

Note: Project was under construction at time of photograph.

Farmers Mutual Hail Insurance
West Des Moines, Iowa
Architect: Design Build Solutions
Contractor: InterClad
Area: 6,435 sq.ft. (*Nanogel Filled* EDGE ®)

Note: Project was under construction at time of photograph.

SUPERSKY

Performance Values

EDGE: 10mm	Light Transmission	Shading Coefficient	Solar Transmission	U-Value	R-Value
Clear	80%	0.98	85%	0.52	1.92
with Nanogel	52%	0.63	54%	0.34	2.94
Opal	40%	0.70	50%	0.52	1.92
with Nanogel	26%	0.45	32%	0.34	2.94
White	20%	0.53	30%	0.52	1.92
with Nanogel	13%	0.34	19%	0.34	2.94
Bronze	50%	0.78	60%	0.52	1.92
with Nanogel	33%	0.50	38%	0.34	2.94
Green	66%	0.89	73%	0.52	1.92
with Nanogel	43%	0.57	47%	0.34	2.94
Venetian	35%	0.64	37%	0.52	1.92
with Nanogel	23%	0.41	24%	0.34	2.94

EDGE: 16mm	Light Transmission	Shading Coefficient	Solar Transmission	U-Value	R-Value
Clear	74%	0.95	82%	0.42	2.38
with Nanogel	45%	0.57	52%	0.23	4.35
Opal	40%	0.70	50%	0.42	2.38
with Nanogel	25%	0.42	32%	0.23	4.35
White	20%	0.53	30%	0.42	2.38
with Nanogel	12%	0.32	19%	0.23	4.35
Bronze	50%	0.72	60%	0.42	2.38
with Nanogel	31%	0.43	38%	0.23	4.35
Venetian	33%	0.45	39%	0.42	2.38
with Nanogel	20%	0.27	25%	0.23	4.35

NEW!

EDGE: 25mm	Light Transmission	Shading Coefficient	Solar Transmission	U-Value	R-Value
Clear	61%	0.74	64%	0.28	3.57
with Nanogel	28%	0.30	27%	0.17	5.88
Opal	36%	0.49	43%	0.28	3.57
with Nanogel	16%	0.21	18%	0.17	5.88
Bronze	32%	0.48	42%	0.28	3.57
with Nanogel	14%	0.20	18%	0.17	5.88

EDGE MAX: 10mm/10mm	Light Transmission	Shading Coefficient	Solar Transmission	U-Value	R-Value
Clear/Clear	66%	0.94	72%	0.26	3.85
with Nanogel	34%	0.47	36%	0.19	5.26
Clear/Opal	32%	0.63	42%	0.26	3.85
with Nanogel	16%	0.31	21%	0.19	5.26
Clear/White	16%	0.51	23%	0.26	3.85
with Nanogel	8%	0.25	11%	0.19	5.26
Clear/Bronze	40%	0.73	51%	0.26	3.85
with Nanogel	20%	0.36	25%	0.19	5.26
Clear/Green	53%	0.86	61%	0.26	3.85
with Nanogel	27%	0.43	30%	0.19	5.26

Performance Values

EDGE MAX: 10mm/10mm	Light Transmission	Shading Coefficient	Solar Transmission	U-Value	R-Value
Opal/Clear	32%	0.63	42%	0.26	3.85
with Nanogel	16%	0.31	21%	0.19	5.26
Opal/Opal	16%	0.49	26%	0.26	3.85
with Nanogel	8%	0.24	13%	0.19	5.26
Opal/White	8%	0.37	14%	0.26	3.85
with Nanogel	4%	0.18	7%	0.19	5.26
Opal/Bronze	20%	0.55	30%	0.26	3.85
with Nanogel	10%	0.27	15%	0.19	5.26
Opal/Green	26%	0.62	36%	0.26	3.85
with Nanogel	13%	0.31	18%	0.19	5.26

EDGE MAX: 10mm/10mm	Light Transmission	Shading Coefficient	Solar Transmission	U-Value	R-Value
White/Clear	16%	0.51	23%	0.26	3.85
with Nanogel	8%	0.35	11%	0.19	5.26
White/Opal	8%	0.37	14%	0.26	3.85
with Nanogel	4%	0.18	7%	0.19	5.26
White/White	4%	0.28	8%	0.26	3.85
with Nanogel	2%	0.14	4%	0.19	5.26
White/Bronze	10%	0.41	16%	0.26	3.85
with Nanogel	5%	0.20	8%	0.19	5.26
White/Green	13%	0.47	20%	0.26	3.85
with Nanogel	7%	0.23	10%	0.19	5.26

BDL: 16mm	Light Transmission	Shading Coefficient	Solar Transmission	U-Value	R-Value
Clear	63%	0.77	67%	0.37	2.70
with Nanogel	39%	0.46	40%	0.20	5.00
Opal	21%	0.55	48%	0.37	2.70
with Nanogel	13%	0.33	29%	0.20	5.00
Ice Mist	48%	0.68	59%	0.37	2.70
with Nanogel	29%	0.41	35%	0.20	5.00
Bronze	31%	0.65	57%	0.37	2.70
with Nanogel	19%	0.39	34%	0.20	5.00
Green	59%	0.74	65%	0.37	2.70
with Nanogel	36%	0.44	39%	0.20	5.00
Blue	58%	0.73	64%	0.37	2.70
with Nanogel	36%	0.44	38%	0.20	5.00

Note: THE EDGE MAX® with Nanogel performance is based on *both* 10mm panels filled with Nanogel.

Note: The contents of this brochure are intended for product information only. All information and details within this brochure are subject to change without notice.

SUPER SKY

Since 1930, ***Super Sky Products, Inc.*** has designed, fabricated and installed skylighting systems that add natural light and beauty to commercial buildings and private residences. This tradition continues as we develop and expand the innovative polycarbonate EDGE®, EDGE MAX® and BDL systems for both sloped and vertical applications. We are extremely excited about our newest, revolutionary, super insulating solution – Nanogel® translucent aerogel, made by Cabot Corporation.

The EDGE® system is a *single layer* system that is strong, silent, leak-free and fire safe. The EDGE® skin system can be installed directly on steel supporting structures or with a self-supporting aluminum frame.

The EDGE MAX® system is a *double layer* system that offers the same features and benefits as the EDGE®, plus higher insulation value, improved shading properties and greater spanning ability.

BDL is a *standing seam* system which incorporates polycarbonate panels and batten caps, offering an inexpensive, high performing glazing system.

NANOGEL® is a premier translucent insulating material with a unique, highly porous structure. This material added to any Super Sky polycarbonate system, will improve the shading coefficient, solar transmission and U-values.

All the above polycarbonate glazing systems may contribute to your "green design" gaining LEED points for your building/project.

Super Sky Products, Inc.

Phone 1·800·558·0467 • 262·242·2000 • Fax 262·242·7409

10301 N. Enterprise Drive • Mequon, WI 53092

www.supersky.com

SUPER SKY PRODUCTS, INC.
10301 N. Enterprise Drive
Mequon, WI 53092
Phone: (262) 242-2000
FAX: (262) 242-7409
www.supersky.com

EDGE® SYSTEM

08950 Translucent Glazing System
Guide Specification

PART 1 GENERAL

1.01 SECTION INCLUDES

A. Engineering and drafting of production documents, including structural calculations of the entire skylight system.
B. Fabrication and erection of skylight frames.
C. Fabrication and erection of the aluminum gutter system including, when applicable, insulation and pitched liners.
D. Applied finish of aluminum extrusions and sheet.
E. Skylight polycarbonate glazing.
F. Skylight related flashings.

1.02 RELATED SECTIONS

A. Section 05120: Structural Steel.
B. Section 05160: Space Frames.
C. Section 05500: Metal Fabrications.
D. Section 07600: Flashing and Sheet Metal.
E. Section 08800: Glazing.
F. Section 08900: Glazed Curtain Walls.
G. Section (____): Roofing.
H. Section (____): Sealants.

1.03 SYSTEM DESCRIPTION

A. Design Requirements:
   1. Extruded aluminum members with a system of alternate serrations for attachment of exterior polycarbonate retainers with 1/4-in. x 20 stainless steel screws.
   2. Condensation guttering system integral with skylight framing members for positive drainage of condensation.
B. Performance Requirements:
   1. Structural Members: Of sufficient sizes to support design loads as prescribed by governing building codes.
   2. The deflection of the framing member in a direction normal to the glazing plane of when subjected to a uniform load deflection test in accordance with ASTM E330, and per the above specified loads, shall not exceed L/100.

3. Water Penetration: No water penetration shall occur when the system is tested in accordance with ASTM E331 using a differential static pressure of 20% of the inward acting design wind load pressure, but not less than 7 psf. Water penetration is defined as the appearance of uncontrolled water other than condensation on the interior surface of any part of the skylight.
   a. Drain water penetrating at joints as well as condensation occurring within the system to exterior face of the work.
4. Thermal Movement: Provide for expansion and contraction of component materials as will be caused by an exterior surface temperature range of plus or minus 85 degrees F, ranging from –20 degrees F to 150 degrees F, and an interior surface temperature range of plus or minus 40 degrees F, ranging from 40 degrees F to 120 degrees F. (Adjustments in the exterior and interior temperature ranges should be made, based on specific project locations and conditions). The skylight system should allow for thermal movements without buckling, sealant failure, undue material stress, and other detrimental affects.
5. Where permitted by code, a 1/3 increase in allowable stress for wind or seismic load shall be acceptable, but not in combination with any reduction applied to combined loads. In no case shall allowable values exceed the yield stress.
6. Compression flanges of flexural members may be assumed to receive effective lateral bracing only from anchors to the building structure and horizontal glazing bars or interior trim which are in contact with 50% of the member's total depth.
7. The skylight framing is designed to be self-supporting between the support construction. The skylights will impose reactions to the support construction. All adjacent and support construction must support the transfer of all loads including horizontal and vertical, exerted by the skylights. Design or structural engineering services for the supporting structure or building components not included in the skylight scope are not included under this section.

1.04 SUBMITTALS

A. Submit one full size set re-producible and two full size copies of shop drawings plans, elevations, and section as required to fully describe the skylight construction for the Architects' approval prior to starting fabrication.
B. Submit structural calculations prepared in accordance with the Aluminum Association's Specifications for Aluminum Structures (SAS30) by a civil engineer qualified in the design of self-supporting skylights and licensed in the State of _____.
C. Submit test reports from an independent recognized testing laboratory, or a full size system sample, showing the skylight system has been designed to allow the glazing material to expand and contract in both the X and Y axis. In lieu of test reports, a full size skylight sample may be submitted to the architect for his approval.
D. Submit two 12" square samples of the glazing material.
E. Submit one 12" long snap-on cap.

1.05 QUALITY ASSURANCE

A. Work of this Section, including design, engineering, fabrication, finishing, preparation at the job site, erection and glazing of the skylight system shall be the responsibility of the skylight manufacturer. The manufacturer shall be regularly engaged in the preceding phases of construction of skylights and able to demonstrate that he has performed successfully on comparably sized projects and of comparable design complexity over at least ten years.

1.06 WARRANTY

A. Submit manufacturer's warranty certifying that skylight work was furnished and installed in accordance with the Contract Documents.

B. Certify that skylight system is free of defects in design, material, and construction for a period of ten (10) years from the Date of Skylight Completion including, but not limited to, leakage, thermal stress, buckling, oil canning, seal failure, audible noises due to expansion and contraction .
C. Warrant polycarbonate against defective materials and color change per the polycarbonate manufacturer's ten (10) year non-prorated warranty.
D. Warrant structural sealant for a period of ten (10) years per sealant manufacturer's standard warranty of merchantable quality. Warranty shall certify that cured sealant:
   1. Will not become brittle or crack due to weathering or normal expansion and contraction of adjacent surfaces.
   2. Will not harden beyond a Shore A durometer of 50, nor soften below a minimum of 10 points.
   3. Will not change color significantly when used with compatible back-up materials.
   4. Will not bleed significantly.
E. Warrant finish for a period of five years.

PART 2 PRODUCTS

2.01 MANUFACTURERS

A. Contract documents are based on products manufactured by Super Sky Products, Inc. Phone: 1-800-558-0467, www.supersky.com.
B. Other manufacturers will be considered when the following conditions have been met.
   1. Optional manufacturers must pre-qualify to bid not less than fourteen (14) days prior to the bid closing date.
   2. Complete details are submitted for review by the Architect showing compliance to the drawings and Contract Documents.
   3. Submit system sample showing system's ability to expand and contract in both the X and Y axis.
      a. Systems which mechanically fasten the glazing material are not allowed.
   4. Certify that system will not be audible to the human ear during a twenty-four hour expansion and contraction cycle.
   5. Submit a 18" square sample of cellular glazing material.
      a. Glazing material with a ribbed interior surface plane(s) is not allowed.
      b. Multi-cellular glazing material shall have a minimum .7" on center, vertical inner wall spacing and a maximum of six horizontal layers.
   6. Certify that the glazing material freely allows condensation to weep from system and that condensation will not significantly affect light transmission values.
   7. Certify that the glazing material does not have any "blinding" optical characteristics during the daylight period for 365 days.
   8. Submit a 12" long sample of the anti-dust impermeable tape.
   9. Submit a 12" long sample of the aluminum retainer.

2.02 MATERIALS

A. Framework:
   1. Principal Supporting Members: 3mm minimum thickness extruded aluminum, alloy 6005-T5 or 6061-T6 per ASTM B221. Sizes, shapes and profiles as indicated on the Contract Drawings.
   2. Snap-on Covers and Miscellaneous Non-supporting Trim: 1.5mm minimum thickness extruded aluminum, alloy 6063-T5 per ASTM B221.
   3. Supporting aluminum gutters: thickness as prescribed by skylight engineer, based on skylight reactions and applied design loads.
   4. Principal Formed Metal Members: 3mm minimum thickness aluminum, alloy (5052) (6061-T6) per ASTM B209.
B. Glazing Strips:

1. Extruded EDPM rubber designed to comply with the following specifications:
   a. Hardness: ASTM D2240 Type A. 50 (+/-5) durometer.
   b. Tensile Strength: ASTM D412. 800 psi (min.).
   c. Elongation: 300% (min.).
   d. Color: Black.
2. Compression Set: ASTM D395 Method B, 22 hours @ 212 degrees F: 25% (max.).
3. Heat Aging Characteristics:
   a. 70 hours @ 100 degrees C.
   b. ASTM D2240 Hardness Change: + durometer.
   c. ASTM D412 Tensile Change: -10%.
   d. ASTM D412 Elongation Change: -20%.
4. ASTM D1171 Weather Resistance at 1 Part Ozone per Million, 500 hours at 20% Elongation: No cracks.
5. No visual checks, cracks or breaks after completion to tests.

C. Fasteners:
1. For Exterior Cap Retainers: ASTM A193 B8 300 series stainless steel screws.
2. For Framework Connections: ASTM B211 2024-T4 aluminum, ASTM A193 B8 300 series stainless steel, and ASTM B316 aluminum rivets, as required by connection.
3. For Anchoring Skylight to Support Structure: ASTM A307 zinc plated steel fasteners.

D. Flashing:
1. 5005 H34 aluminum .040" minimum thickness.
2. Sheet metal flashings/closures/claddings are to be furnished shop formed to profile in min. 10-ft. lengths, when lengths exceed 10-ft. Field trimming of the flashing and field forming the ends is necessary to suit as-built conditions. Sheet metal ends are to overlap 6-in. to 8-in. minimum, set in a full bed of sealant and riveted if required.

E. Finish (Standard)(Custom)(____) color coat to following requirements:

The following is a listing of all types of finishes that can be specified, therefore, only those finishes that apply should be used in an individual specification.

1 High Performance Pigmented Organic Coatings: AAMA 605.2 (e.g.: Duranar, Fluropon; min. 70% Kynar fluropolymers).
2. Pigmented Organic Coatings: AAMA 603.8 (e.g.: Acroflur; min. 50% Kynar fluropolymers).
3. Anodized Coatings:
   a. AAMA 607.1 Architectural Class I clear anodized Type AA-M10C22 A41: **215-R1**.
   b. Class II clear anodized Type AA-M10C22 A-31: **204-R1**.
   c. AAMA 606.1 Architectural Class I pigmented anodized Type AA-M10C22 A42:Light, medium and dark bronze and black.

F. Polycarbonate Glazing Panels:
1A. **10mm** Thermal and solar performance:
   a. Insulation Value ("U") per ASTM C236 configured for/or NFRC 100 _.52___.
   b. Light Transmission _____/_____; Quadrants (L.T.%) _____ per ASTM E1175.
   c. Solar Transmission _____/_____ ; Quadrants (L.T.%) _____ per ASTM #1084.
1B. **16mm** Thermal and solar performance:
   a. Insulation Value ("U") per ASTM C236 configured for/or NFRC 100 _.42___.
   b. Light Transmission _____/_____; Quadrants (L.T.%) _____ per ASTM E1175.
   c. Solar Transmission _____/_____ ; Quadrants (L.T.%) _____ per ASTM #1084.
2. Flammability
   a. The exterior and interior faces shall be an approved light transmitting panel with a CC1 fire rating classification per ASTM D-635, smoke density no greater than 100 (10mm) or 450 (16mm) per ASTM E 84, and self-ignition temperature of 1110 deg. F per ASTM 1929.
   b. The exterior and interior faces shall have a flame spread of 5 (10mm) and 55 (16mm) per ASTM E 84.
3. Weatherability:
   a. The exterior and interior faces shall not change color more than 3.0 units (DELTA-E by ASTM D2244) after 120 months outdoor weathering an average of at least two samples.

b. The exterior and interior faces shall be tested by recognized laboratory for weathering evaluation per ASTM D4364-84 (EMMAQUA, UNBACKED), after exposure to minimum concentrated natural sunlight radiation of 5600 MJ/M^2 U.V.(200-385 NM).

The exterior and interior faces shall not change.
2.1 Color more than 3.0 units Delta E, 5.0 units Delta L and Delta B
2.2 Yellowing index more than 10 units Delta Y per ASTM D1925.

c. The light transmission as measured by ASTM D1003, shall not decrease more than 6% over 10 years.

4. Appearance:
   a. The panels shall be uniform in color, with cellular cross section.
5. Impact Resistance:
   a. The panels shall provide for the following minimum performance:
      1.1. ASTM E-822-81 - Velocity up to 82' per second using ice balls of up to 1.1".
      1.2. ASTM D-3841/SPI - Impact and Shatter Resistance of 200 ft. lbs.

2.03 FABRICATION

A. Construct skylight(s) using extruded aluminum members.
B. Construct skylight(s) using a continuous aluminum curb with expansion joints as required.
C. Insofar as practicable, fit and assemble work in the manufacturer's shop. Work which cannot be permanently assembled shall be shop-assembled, marked, and disassembled before shipment to the jobsite.
D. Design rafter bars for slide-in type spline glazing strips.
E. Design polycarbonate retainer fasteners to resist uplift loadings. Spacing to be determined by structural calculations, when applicable.
F. Shop locate drill and bolt, or weld aluminum clips to framing members.
G. Locate weepholes in curb to positively drain condensation to exterior of skylight at each rafter connection.

PART 3 EXECUTION

3.01 EXAMINATION

A. Upon arrival to the jobsite for installation of the specified work, the manufacturer's erector is to examine the structure and substrate to determine that it is ready to receive the skylight work. Report any faults to the General Contractor prior to proceeding with skylight installation. The skylight manufacturer is not responsible for faulty structure and substrate.

3.02 PREPARATION

A. Contact between aluminum and dissimilar metals shall receive a protective coating of asphaltic paint for the prevention of electrolytic action and corrosion.
B. Skylight manufacturer and manufacturer's erector excludes all field measuring, demolition, removal, replacement, or re-work of any existing material.

3.03 INSTALLATION

A. Install skylight frame, polycarbonate and accessory items as needed in accordance with manufacturer's instructions.
B. Install skylight system under the direction of the skylight manufacturer's designated erector.
C. Erect system plumb and true, in proper alignment and relation to established lines and grades as shown on approved shop drawings.
D. Anchor skylight to structure in strict accordance with approved shop drawings.

Apply sealing materials in strict accordance with sealant manufacturer's instructions. Before application remove mortar dirt, dust, moisture and other foreign matter from surfaces it will contact. Mask adjoining surfaces to maintain a clean and neat appearance. Tool sealing compounds to fill the joint and provide a smooth finish.

E. Furnishing of temporary covering and weatherproofing of the skylight openings, if required by the General Contractor, and removal of the protective measures during and after the skylight installation is excluded by the manufacturer and the manufacturer's erector. ANY TEMPORARY COVERINGS THAT MAY BE REQUIRED ARE NOT TO OBSTRUCT OR INTERFERE WITH THE SKYLIGHT INSTALLATION IN ANYWAY.

3.04 CLEANING

A. Install skylight frame and associated metal to avoid soiling or smudging the finish.
B. Clean polycarbonate and frame at time of installation. Final cleaning, if required, subsequent to completion of project, is not to be performed by the manufacturer.

3.05 PROTECTION

A. The skylight manufacturer does not provide, nor does it include any temporary protection to the skylight and its materials after the installation is complete. Protection of the skylight from ongoing work by other trades shall be the responsibility of the General Contractor. The manufacturer is responsible only for the damage caused by the personnel under its control and responsibility.

END OF SECTION

COMPONENT HANDLES

Finishes

M112PL
Munchen
Solid Brass

Description	Resista Brass (F77-R)	Antique Brass (F73)	Brushed Chrome (F41-R)	Polished Chrome (F49-R)	Oil-Rubbed Brass (F79)	Pure White (F9010)	Matte Black (F9714)	Satin Nickel (F42-R)	Antique Nickel (F44-R)	Rustic Umber (F8709)
RH Handle	2202811	8751499	8751507	8751515	8751523	8751531	8752399	2194283	2236885	2237247
LH Handle	2202829	8751503	8751511	8751519	8751527	8751535	8752403	2194275	2236893	2237255

All handles include set screw and 3mm hex wrench.

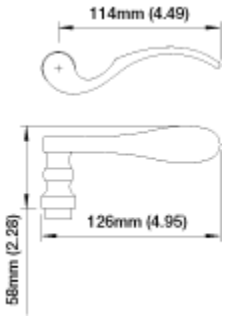

M112PL-KH
Munchen
Solid Brass

Description	Resista Brass (F77-R)	Antique Brass (F73)	Brushed Chrome (F41-R)	Polished Chrome (F49-R)	Oil-Rubbed Brass (F79)	Pure White (F9010)	Matte Black (F9714)	Satin Nickel (F42-R)	Antique Nicel (F44-R)	Rustic Umber (F8709)
RH Handle	2237301	8751571	8751579	8751587	8751595	8751603	8752407	2237263	2237280	2237327
LH Handle	2237319	8751575	8751583	8751591	8751599	8751607	8752411	2237271	2237298	2237335

All handles include set screw and 3mm hex wrench.

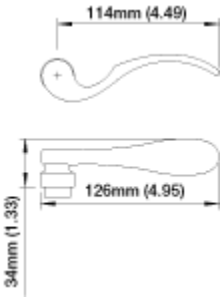

M151
Verona
Solid Brass

Description	Resista Brass (F77-R)	Antique Brass (F73)	Brushed Chrome (F41-R)	Polished Chrome (F49-R)	Oil-Rubbed Brass (F79)	Pure White (F9010)	Matte Black (F9714)	Satin Nickel (F42-R)	Antique Nickel (F44-R)	Rustic Umber (F8709)
Single Handle - non-handed	2237343	8752519	8752527	8752523	8752539	8752535	8752531	2188166	2203320	2237351

All handles include set screw and 3mm hex wrench.

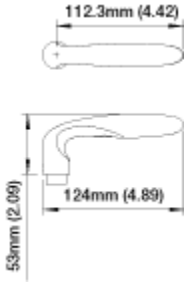

M156
Athinai
Solid Brass

Description	Polished Brass/ Brushed Brass (F77-R/F72-R)	Resista Brass (F77-R)	Polished Chrome/ Br. Stainless Steel (F49-R/69-R)	Satin Nickel (F42-R)
Single Handle - non-handed	2234628	2438971	2439033	2234610

All handles include set screw and 3mm hex wrench.

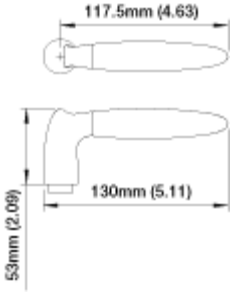

M1603
Ródos
Solid Brass

Description	Resista Brass (F77-R)	Antique Brass (F73)	Brushed Chrome (F41-R)	Polished Chrome (F49-R)	Oil-Rubbed Brass (F79)	Pure White (F9010)	Matte Black (F9714)	Satin Nickel (F42-R)	Antique Nickel (F44-R)	Rustic Umber (F8709)
RH Handle	2240673	2239197	2235831	2239218	2239550	2239576	2239592	2240657	2235903	2240690
LH Handle	2240681	2239200	2235794	2239226	2239568	2239584	2240649	2240665	2235840	2240702

All handles include set scre and 3mm hex wrench.

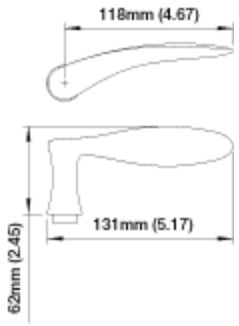

M1620
Toronto
Solid Brass

Description	Resista Brass (F77-R)	Antique Brass (F73)	Brushed Chrome (F41-R)	Polished Chrome (F49-R)	Oil-Rubbed Brass (F79)	Pure White (F9010)	Matte Black (F9714)	Satin Nickel (F42-R)	Antique Nickel (F44-R)	Rustic Umber (F8709)
RH Handle	2239138	2237386	2237407	2237423	2235989	2237440	2238282	2238320	2239111	2239154
LH Handle	2239146	2237394	2237415	2237431	2235954	2237458	2238311	2238338	2239120	2239162

All handles include set screw and 3mm hex wrench.

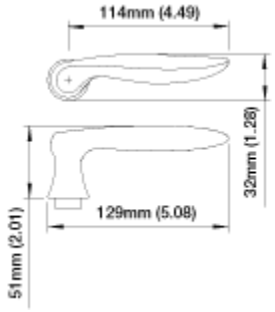

M1610
New Orleans
Solid Brass

Description	Resista Brass (F77-R)	Antique Brass (F73)	Brushed Chrome (F41-R)	Polished Chrome) (F49-R)	Oil-Rubbed Brass (F79)	Pure White (F9010)	Matte Black (F9714)	Satin Nickel (F42-R)	Antique Nickel (F44-R)	Rustic Umber (F8709)
RH Handle	2241326	2241174	2241220	2236033	2241246	2241262	2236076	2241289	2241300	2241342
LH Handle	2241334	2241211	2241238	2236009	2241254	2241271	2236068	2241297	2241318	2241351

All handles include set screw and 3mm hex wrench.

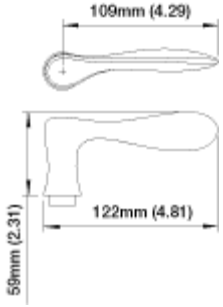

Brass Handle Finishes

Note: All handles, except where noted, are non-handed single handles with set screw. Door handle shafts are sold separately.

SPECIFICATION SECTION

DIVISION 9 - FINISHES

GYPSUM WALLBOARD

a Temple-Inland product

Drywall Panels

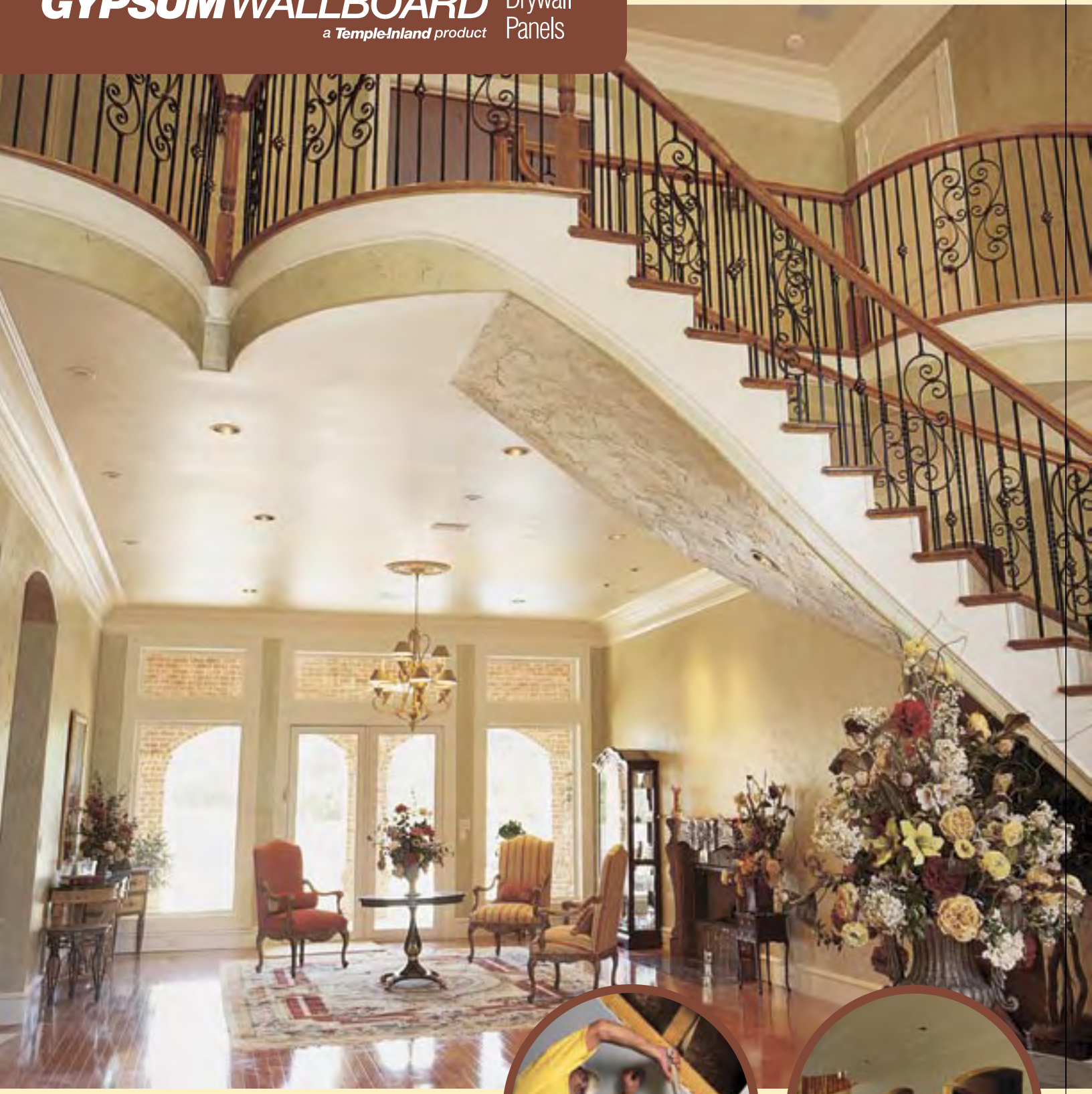

Temple-Inland®

A growing line of solutions for an expanding range of applications.

With a product line that includes over 20 different drywall formulations and over 70 width, length and thickness combinations, Temple-Inland's annual gypsum wallboard manufacturing capacity has grown over 50 percent in the last 5 years.

This increase has fueled a customer base expansion outside the company's successful 100-year record of service to the residential construction industry. Architects, specifiers and commercial drywall contractors are discovering the consistency and reliability that builders and remodelers have counted on for years. In addition, our wallboard is U.L. approved in a long list of wall, floor and ceiling assemblies, making its inclusion in the architectural specifications of high-profile projects increasingly common.

Building Products, Building Productivity

Temple-Inland is constantly looking for new ideas to help architects, builders and installers design and construct projects with greater aesthetics, operational efficiencies and long-term value. We're not only a resource for building products, but for building productivity as well.

We manufacture specific wallboard products that save labor, simplify installation, ease handling fatigue, reduce waste and resist damage. We also offer particular performance characteristics that include fire resistance, water resistance, flexibility, noise reduction and mold resistance. Our technical experts and production engineers work tirelessly to deliver the results construction professionals demand. Evidence of that success is represented in the featured products below.

Temple-Inland gypsum wallboard products are available through an expanding network of distributors, lumber yards, home centers and specialty drywall supply dealers.

Consistent Quality, Exceptional Service

Some things, however, never change. The quality and consistency of our products are constants we won't compromise. The reliability of our product shipments and the effort we give to keep customers satisfied are fundamental values as well. We're always ready to answer questions about specifications, availability and delivery schedules. If the need is for highly specific technical assistance, our in-house experts are available for direct contact and consultation.

In contrast, we also value flexibility. Accommodations like mixed-load delivery of various products, road or rail shipment options, and SCS certified or standard product orders are common.

Thanks to a growing line of gypsum wallboard products for an ever-widening range of applications, Temple-Inland continues to maximize the drywall solutions available to our customers.

STRETCH 54®

Wide Gypsum Wallboard

Six inches wider than standard 48″ gypsum wallboard panels, Stretch54® is designed to make larger walls easier, faster and more efficient to hang because it covers more area and produces fewer seams to tape, float and finish. It's a little more board, and a lot less work.

SPAN 24™

Gypsum Ceiling Board

Engineered to maintain exceptional flatness on ceilings framed 24″ o.c.,½-inch Span24™ is thinner and lighter than traditional 5/8″ ceiling material and outscored thicker products in ASTM sag tests. Plus, its extra durability and lower cost mean greater long-term value.

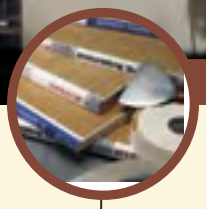

DAMAGE GUARD® AR/IR

Abuse- & Impact-Resistant Wallboard

To protect gypsum walls in high-traffic areas, we recommend DamageGuard® Available in two variations, AR (abuse resistant) increases protection against everyday surface damage while IR (impact resistant) also adds wall penetration reinforcement.

SILENT GUARD™ TS

Mold-Resistant Shaftliner

On an often hostile jobsite, SilentGuard™ TS is a gypsum shaftliner panel designed to provide fire resistance, sound control and installation efficiency for shafts and area separation walls, plus the mold resistance of the TemShield™ mold protection system.

COVER: *Finished and progress photos of the Michael Holigan show home in Dallas, Texas.* ***INSIDE SQUARE:*** *Application photo at the 460,000-square-foot Prestonwood Baptist Church auditorium in Plano, Texas.* ***CIRCLE:*** *Installation photo at the FedEx Arena in Memphis, Tennessee, completed Fall 2004.*

PRODUCT		SIZE	ASTM	FEDERAL SPECIFICATION SS-L-30D			APPLICATION STANDARDS	
				TYPE	GRADE	CLASS		
Regular Gypsum Wallboard		¼" & ⅜" - 4' x 8' to 16' Tapered	C1396	III	R	1	ASTM C840	GA216
		½" - 4' x 8' to 16' Tapered	C1396	III	R	1	ASTM C840	GA216
Regular Stretch54® Gypsum Wallboard		½" - 54" x 10' to 16' Tapered	C1396	III	R	1	ASTM C840	GA216
Regular Foil-Back Gypsum Wallboard		½" - 4' x 8' to 12' Tapered	C1396	III	R	1	ASTM C840	GA216
Gypsum Base for Veneer Plaster	Regular Veneer Plaster Base	½" - 4' x 8' to 12' Tapered	C1396	VI	R	1	ASTM C844	GA151
Gypsum Ceiling Board	Regular Span24™ Gypsum Board	½" - 4' x 8' to 12' Tapered	C1396	III	R	1	ASTM C840	GA216
½" Fire-Rated Gypsum Wallboard	Type TG-C, 48" Wide	½" - 4' x 8' to 14' Tapered	C1396	III	X	1	ASTM C840	GA216
½" Fire-Rated Gypsum Wallboard	Type TG-C Stretch54®, 54" Wide	½" - 54" x 10' to 14' Tapered	C1396	III	X	1	ASTM C840	GA216
½" Fire-Rated Gypsum Wallboard	Type TG-C Foil-Back, 48" Wide	½" - 4' x 8' to 12' Tapered	C1396	III	X	1	ASTM C840	GA216
⅝" Fire-Rated Gypsum Wallboard	Type X and Type TG-C, 48" Wide	⅝" - 4' x 8' to 14' Tapered	C1396	III	X	1	ASTM C840	GA216
⅝" Fire-Rated Gypsum Wallboard	Type X and Type TG-C Stretch54,® 54" Wide	⅝" - 54 " x 10' to 14' Tapered	C1396	III	X	1	ASTM C840	GA216
⅝" Fire-Rated Gypsum Wallboard	Type X and Type TG-C Foil-Back, 48" Wide	⅝" - 4' x 8' to 12' Tapered	C1396	III	X	1	ASTM C840	GA216
Fire-Rated Gypsum Base for Veneer Plaster	Fire-Rated Veneer Plaster Base	⅝" - 4' x 8' to 12' Tapered	C1396	VI	X	1	ASTM C844	GA151
Water-Resistant Gypsum Backing Board	Regular Water-Resistant Gypsum Backing Board	½" - 4' x 8' to 12' Tapered	C1396	VII	W	2	ASTM C840	GA216
Fire-Rated, Water-Resistant Gypsum Backing Board	Type X and Type TG-C Water-Resistant Gypsum Backing Board	⅝" - 4' x 8' to 12' Tapered	C1396	VII	X	2	ASTM C840	GA216
Gypsum Sheathing Board	Regular Gypsum Sheathing Board	½" - 4' x 8' Square Edges ½" - 2' x 8' V-T&G Edges	C1396	II	W	2	ASTM C1280	GA253
Fire-Rated Gypsum Sheathing Board	Type X and Type TG-C	⅝" - 4' x 8' Square Edges ⅝" - 2' x 8' V-T&G Edges	C1396	II	X	2	ASTM C1280	GA254
* Mold- and Water-Resistant Structural Sheathing	StructGuard™ TS	½" - 4' x 8' to 12' Square Edges	C1396	II	W	2	ASTM C1280	GA253
* Mold- and Water-Resistant Structural Sheathing	StructGuard™ TS	⅝" - 4' x 8' to 12' Square Edges	C1396	II	W	2	ASTM C1280	GA253
Exterior Gypsum Soffit Board	Regular Exterior Gypsum Soffit Board	½" - 4' x 8' to 12' Tapered	C1396	III	R	1	ASTM C840	GA216
Fire-Rated Exterior Gypsum Soffit Board	Type X and Type TG-C	⅝" - 4' x 8' to 12' Tapered	C1396	III	X	1	ASTM C840	GA216
Fire-Rated Gypsum Coreboard	SilentGuard™ Shaftliner	1" - 2' x 8,' 10,' 12' Double Beveled	C1396	IV	X	2	NA	NA
Fire-Rated Gypsum Coreboard	SilentGuard™ TS Shaftliner	1" - 2' x 8,' 10,' 12' Double Beveled	C1396 D3273	IV	X	1	NA	NA
Fire-Rated Abuse Board	DamageGuard® AR	⅝" - 4' x 8' to 12' Tapered	C1396	III	X	1	ASTM C840	GA216
Fire-Rated Impact Board	DamageGuard® IR	⅝" - 4' x 8' to 12' Tapered	C1396	III	X	1	ASTM C840	GA216

*As manufactured per ASTM D3273

Special Order Information: Other widths, edges and lengths may be available on special order with established minimums and lead time. Some products may not be available in all markets. Please check with your local Temple-Inland sales representative.

For more information about the certification of our gypsum wallboard manufactured with synthetic gypsum, visit our web site: www.templeinland.com.

¼" & ⅜" ½" ⅝" 1"

member GYPSUM ASSOCIATION

Certified Gypsum Wallboard Available SCS

www.templeinland.com | 800-231-6060

Temple-Inland®

Malaga Cove Tile, INC.
TEL 310-544-1320 • FAX 310-544-7820
www.malagacovetile.com

INSTALLATION RECOMMENDATION:

We provide these pewter tile and mosaic installation instructions as a general guideline.

Additionally, we have supplemented these recommendations with installation specifications provided by leading North American setting material producers.

Notes for Specifiers and Installers:

PEWTER:
A high percentage of our product is tin. Tin has been recognized since 7700 BC but wasn't commonly as a material of choice for casting fine pewter details until the eighteenth Century. The process of metallurgy is one of the oldest sciences. Artists throughout the world have employed casting metal techniques to bring a rich heritage of intricate designs and style.

INSPECTION:
Upon receiving the Pewter Accents, we recommend that the customer open and inspect each carton, under adequate lighting. Any irregularities between the intended purchase order and the material delivered must be communicated immediately to the point of purchase. No adjustments will be made after the tile has been installed.

INSTALLATION CONSTITUTES ACCEPTANCE:
We recommend the selection of a referenced and reputable tile contractor, experienced in the setting of pewter tiles. The tile installer must review and understand our installation recommendations before initiating the application.

SETTING MATERIALS:
We recommend that setting materials be selected from industry recognized leaders and that installation methods and material handling directions be followed. Do not substitute with other brands of latex admixes or dilute with water; the results may vary considerably from those desired and acceptable.

EXPANSION JOINTS:
Are essential for most tile installations. Expansion joints will vary, depending on the substrate, climate, and size of the installation. Expansion joint and construction of the joints should follow the TCA or TTMAC recommendations.

a) All mortar beds should be allowed to cure a minimum of seven days, prior to installing Pewter Accents Tiles.

b) When used on a floor application, allow your bond coat additional time to maximize curing (48 hours), before grouting. Pewter tiles are so completely vitrified, competent adhesion requires extra efforts and polymer-enhanced mortars and grouts, unlike ceramic tiles.

c) All submerged heavy mineralized water installations should have a full 28 day recommended cure, after grouting, before submersion.

d) The performance of a properly installed thin-set (thin-bed) application is dependent on the suitability of the substrate. (flat, clean, rigid, sound)

e) Cutting - For the best results, we recommend that installers use quality wet diamond blade saws with a continuous rim diamond blade for maximum performance. A simple hack saw is also a practical method of cutting pewter tiles, followed by smoothing of edges with an emery-board or with a grinding or sharpening stone.

f) Drilling - A sharp carbide or diamond chipped drill bit can be used to drill pewter successfully.

g) Safety - When handling and cutting pewter, always wear protective goggles and gloves. When mixing setting materials or handling power equipment, follow the manufacturer's materials safety and handling recommendations.

h) Surface Resistance - When added into floors for decoration, pewter tiles may not be adequate under higher traffic conditions. We don't recommend using pewter with surface patinas, oxidized or plated tiles, in areas where they would need regular abrasive cleaning, such as inside a bath or shower area. It's important to assess the area in which the pewter has been selected and determine if acceptable.

i) Use sanded grouts for all Pewter Accents. Nonsanded grout joints have a recommended maximum thickness is 1/8" and for sanded they begin at 1/8" thickness. We recommend polymer-modified sanded grout or even modified epoxy grout. Follow manufacturer's recommendations for preparation and use. The sand within the grout should be carefully applied, not to scratch the surface. The cementitious sanded grout should not be mixed too dry, making it necessary to aggressively pack gritty grout into the joints. Also, it cannot be too wet so that it will run. Mix it to a consistency of butter so that it can be shaped and easily fill the joints without force. The acrylic or latex materials in polymer-modified grouts help to encapsulate the sand making it less gritty. We recommend adding a latex admix to standard sanded grout, use an already polymer-modified dry mix grout powder, or use a modified epoxy grout – for a full, flush grout joint.

j) Trowels for applying pewter tiles to wall surfaces, use a 3/16" x 1/4" V-notch trowel with a polymer-modified non-sagging wall thin-set. The backs of tiles require back-buttering to fill in the locking void. For applying floor pieces, standard polymer-modified thin-set is recommended with a trowel appropriate to the tile application, commonly º" square notch for 12"x12" (nominal 30x30cm) 13"x13" (nominal 33x33cm) and 16"x16" (nominal 40x40cm) ©" (elliptical or half moon trowel.

DISCLAIMER AND COPYRIGHT

The Company does not warrant or make any representation regarding the accuracy, suitability or reliability of any information on this site nor does it warrant that the content and operation of the site is or will at any time in the future be free from error. The Company does not warrant that the site and the server on which the site operates are free from viruses or other possible causes of harm.

To the maximum permitted by law, the Company does not in any event accept liability for any damages arising out of the use of this site.

Although this site may offer links to other Internet sites from time to time, the Company is not responsible for the content or operation of such sites. Links are provided as a convenience for visitors to the Malaga Cove Tile, Inc. site, to help locate resources that may be useful. Links to other sites should not be taken to imply that the Company is affiliated in any way with those sites or their owners, unless specifically declared.

To the maximum permitted by law, the Company disclaims all express or implied warranties including, but not limited to implied warranties of merchantability and fitness of the information, materials and processes indicated on this site for a particular use or application.

The Company operates this site and makes no representation that the services and materials indicated on the site are appropriate or available for use in other locations, including other countries.

VITRIFIED GLASS TILES AND MOSAICS ARE:

- Less expensive initially or over the life of the floor
- Easy to install
- Lighter in weight / thinner than natural stones / no weak veins or fissures
- Low maintenance and maintenance costs
- Has extended color palette / design flexible
- Reduced shade variation or greater if desired
- Capable of forming over curved dimensions and shapes
- Acid, alkali & chemical resistance
- Impermeable / stain resistance
- Harder wearable surface with impact and pressure resistance
- Excellent bond strength
- Will not decay
- Does not support the growth of bacteria, mildew, or fungus
- Weather resistant / color-fast and won't fade
- Ecologically compatible, environmentally green
- Heat energy retaining and conducting (conserving)
- Won't burn / not inflammable
- Scratch resistant
- Odorless
- Nonconductive
- Time resistant / easily repairable
- Never needs stripping or finishing.
- No chemical or toxic substances
- Homogeneous color is through entire glass tile
- UV resistant
- Hygienic
- Design coordination floor and walls
- Historically representative / oldest artistic decorative substance
- Will not stain, burn, or fade.
- Will not shrink, expand or delaminate.
- Moisture will not affect it.
- Soil, germs, smoke and fumes will not penetrate it.
- Never needs buffing, waxing or finishing.

The characteristic handmade Malaga Cove Glass will have a certain amount of variation and variegation of color, tone, shade and size. Additionally, you will notice creases, wrinkles, shivers, waves, bubbles and shimmering which are inherent characteristics of natural glass and only serve to enhance the final beauty of the installation.

TILE MASTER SPECIFICATION

This guide must be edited and materials must be selected to suit the needs of your project. This Master Specification is for general purposes only. Refer to drawings and follow this specification outline for determining the best specific installation methods and material selections.

PART 1 - GENERAL

[1.1] Scope

Furnish all labor, materials and equipment necessary to complete all work specified herein and as indicated in accompanying drawings to the standards of the tile trade.

[1.2] Submit Manufacturer's Technical Data and Installation Instructions for all specified materials.

[1.3] Description:

A. Work Included
   1) Floors
   2) Walls
   3) Ceilings
   4) Patios and Walkways
   5) Roof Decks and Balconies
   6) Shower Walls and Floors
   7) Fountains
   8) Counter tops
   9) Pools
   10) Refrigerated Rooms
   11) Steam Rooms
   12) Sound Rated Floors and Walls
   13) Water Proofing
   14) Expansion Joints
   15) Other

B. Related Work Specified Elsewhere
   1) Concrete substrate Sec.03300
   2) Fluid applied waterproofing Sec.07120
   3) Expansion and control joints Sec.07900
   4. Scratch coat for ceramic wall tile Sec.09200
   5) Toilet accessories Sec.10805
   6) Other areas gypsum board, plaster, sealants, etc. Concrete Finishing Sec. 03345, Water Proofing Sec. 07100, Expansion Control Sec. 05500, Gypsum Board System Sec. 09250.

[1.4] Quality Assurance

Reference ANSI (American National Standards Institute) Specifications and Standards

A. For Workmanship
   1) A108.1: Installation of ceramic tile Portland cement mortar.
   2) A108.4: Installation of ceramic tile with organic adhesives or water-cleanable epoxy adhesive.
   3) A108.5: Installation of ceramic tile with Dry-Set Portland cement mortar or latex Portland cement mortar.
   4) A108.6: Installation of ceramic tile with chemical resistant, water-cleanable, tile setting and grouting epoxy.
   5) A108.10: Installation of grout in tile work.
   6) A108.11: Installation of cementitious backer units.

B. For Materials
   1) A118.1: Dry-Set Portland cement mortar
   2) A118.3: Chemical resistant, water-cleanable tile setting and grouting epoxy and water-cleanable tile setting epoxy adhesive.
   3) A118.4: Latex Portland cement mortar
   4) A118.6: Ceramic tile grouts
   5) A118.9: Cementitious backer units
   6) A136.1: Organic adhesives, Type I Adhesive and Type II Adhesive
C. For Tile
1) A137.1: American National Standard Specifications for Ceramic Tile.

[1.5] Project Conditions
A. Environmental: Install mortar, set and grout tile when surfaces and ambient temperature is minimum 50°F (10°C) and maximum 90°F (32°C). Consult with manufacturer for specific requirements.
B. Do not install mortar, set or grout tile exterior when inclement weather conditions are expected within 48 hours after work is completed unless properly protected.
C. Protection: Protect adjacent work surfaces during tile work. Close rooms or spaces to traffic of all types, until mortar and grout have set.
D. Safety: Observe the manufacturer's safety instructions including those pertaining to ventilation.

PART 2 - PRODUCTS

[2.1] Tile
A. Specify tile as needed by:
   - Style
   - Manufacturer
   - Type
   - Size
   - Catalog # and Color
B. Specify all trim shapes as necessary.

[2.2] Installation Materials
A. Anti-Fracture Membrane/Cleavage Membrane: Where indicated on the drawings, and elsewhere as required for isolating the installation from due to minor substrate movement and normal structural deflections.
B. Self-Leveling Underlayment: Where indicated on the drawings, and elsewhere as required to provide a flat, level surface for direct receipt of tile and other floor coverings on dry, interior installations.
C. Mortar Bed Installations: Where indicated on the drawings, and elsewhere as required for mortar bed or brown coat as the substrate for tile work; work to conform to ANSI A108.1.
D. Cementitious Backer Units: ANSI A118.9, where indicated on the drawings, and elsewhere as required for floors and walls, interior and/or exterior, wet areas, and dry as recommended substrate for tile, fire rated wall installations, heat shield with UL listing for floors and walls; installation to comply with ANSI A108.11 and manufacturer's installation instructions.
E. Tile Adhesives:
   1) ANSI A118. 1: Where indicated on the drawings, and elsewhere as required for setting tile as specified by ANSI A108.5, Dry-Set Portland Cement Mortar or Latex Portland Cement Mortar, over substrates prepared accordingly.
   2) ANSI A118.4: Polymer-Enhanced Mortars
   3) ANSI A136.1: Where indicated on the drawings, and elsewhere as required for setting tile as specified by ANSI 108.4, Organic Adhesives, over substrates prepared accordingly. (Type I & Type II Wall Tile Adhesive)
   4) ANSI A118.3: Where indicated on the drawings, and elsewhere as required for setting tile as specified by ANSI A108.6 Chemical Resistant, Water-Cleanable Tile Setting and Grouting Epoxy, over substrates prepared accordingly.
F. Latex Additives: Where specified, a latex additive is to be used as the mixing liquid, per manufacturer's direction, with certain pre-packaged, dry-set mortar mixes, to achieve a Latex Portland Cement Dry Set Mortar complying with ANSI A118.4.
G. Grout: ANSI A118.6 Where indicated on the drawings, and elsewhere as required for filling the joints between tiles.
   1) Polymer-Modified Portland Cement Grout
   2) Dry-Set Grout
   3) Chemical Resistant, Water-Cleanable Tile Setting and Grouting Epoxy; ANSI A118.3
H. Elastomeric Joint Caulk: Where indicated on the drawings, and elsewhere as required provide:
1) All joints between floors and walls and at joints between tile and dissimilar materials.

[2.3] Delivery, Storage, and Handling
A. Deliver and store packaged materials in original containers with seals unbroken and labels intact until time of use. Comply with requirements of ANSI A137.1 for labeling sealed tile packages.
B. Prevent damage or contamination to materials by water, freezing, foreign matter and other causes.

[2.4] Field-Constructed Mock-Up

Before installing tile, erect mock-ups for each form of constructions and finish required to verify selections made under sample submittals and to demonstrate aesthetic effects as well as qualities of materials and execution. Build mock-ups to comply with the following requirements, using materials indicated for final unit of Work.
A. Locate mock-ups on site in locations and size indicated or, if not indicated, directed by Architect.
B. Demonstrate the proposed range of aesthetic effects and workmanship.
C. Obtain Architect's acceptance of mock-ups before start of final unit of Work.
D. Retain and maintain mock-ups during construction in undisturbed condition as a standard for judging completed unit of Work.
   1. Accepted mock-ups in undisturbed condition. At time of Substantial Completion they may become part of completed unit of Work.

[2.5] Pre-installation Conference:

Conduct conference at Project site to comply with requirements of Division 1 Section "Project Meetings."

PART 3 - EXECUTION

[3.1] Inspection

A. Examine surfaces which are to receive tile.

1) Do not proceed with work until defects or conditions which would adversely affect quality, execution and permanence of finished tile work are corrected (ANSI AN-3 and A-3).

B. Condition of surface to receive tile.

1) Assure that surfaces to receive tile are stable, flat, firm, dry, clean and free of oil, waxes and curing compounds.
2) Deflection of substrate not to exceed 1/360th of the span [1/2" (12 mm) in 15' (457 cm)]. Allow for live and impact load as well as dead load weight of tile and setting bed.
3) Protect adjacent surfaces prior to beginning tile work.

[3.2] Installation

A. Surface Preparation for Tile and Stone Work

1) General

a) All supporting surfaces shall be structurally sound, solid, stable, level, plumb, and true to a tolerance in plane of 1/8" (3 mm) ± in 8'0" (244 cm) for walls, 1/8" (3 mm) ± in 10'0" (305 cm) for floors when specified for thin-set method, or 1 4" (6 mm) ± in 8'0" (244 cm) for walls and 1/4" (6 mm) ± in 10'0" (305 cm) for floors when specified for mortar bed method. They shall be clean and free of dust, oil, grease paint, tar, wax, curing compound, primer, sealer, form release agent, laitance, loosely bonded topping, loose particles or any deleterious substance and debris which may prevent or reduce adhesion.
b) Mechanically sand and scarify the substrate to completelyremove all paint, loosely bonded topping, loose particles and construction debris.
c) Neutralize any trace of strong acid or alkali.
d) All substrates shall be dry. The moisture content shall not exceed 50%.
e) Turn off all forced ventilation and radiant heating systems and protect work against drafts during installation and for a period of at least 72 hours after completion. Use indirect auxiliary heaters to maintain the temperatures in the area at the recommended workable level. Vent temporary heater to exterior to prevent damage to tile work from carbon dioxide build-up.
f) Presswood, particle board, chipboard, masonite, gypsum floor patching compounds, asbestos board, Luan and similar dimensionally unstable materials are not acceptable substrates.
g) Before work commences examine the areas to be covered and report any flaw or adverse condition in writing to the architect and to the general contractor. Do not proceed with work until surfaces and conditions comply with the requirements indicated in ANSI A108 specifications.

2) Concrete

a) All concrete substrates shall be at least 28 days old, completely cured and free of hydrostatic conditions, and/or moisture problems.
b) New concrete surfaces for dry-set mortar, medium-bed mortar or thick-bed mortar installations shall be wood floated or broom finished. Concrete walls should be bush-hammered or heavily sandblasted.
c) On grade or below grade concrete slabs must be installed over an effective vapor barrier and be exempt from hydrostatic pressures.
d) Over excessively dry porous concrete, keep the concrete substrate continuously moist for at least 24 hours before work begins when using dry-set mortars or medium-bed mortars. Remove all excess water or standing water allowing the surface to become almost dry before installing the leveling coat, dry-set mortar or medium-bed dry-set mortar.
e) For minor repairs and smoothing up to 1/2" (12 mm), use Skim Coat and Patching Compound or Patching and Leveling Compound.
f) For leveling of large areas use Self-Leveling Underlayment
g Use Bedding Mortar mixed with 1/2 water and 1/2 Acrylic Mortar Admix to build-up or level a concrete substrate requiring a topping between 1/2" (12 mm) and 2" (50 mm) average thickness (see manufacturer data sheet for details.)

3) Plywood

a) Plywood sub-floor and underlayment must be Group 1, Exterior Grade plywood, C.C. type or better, conforming to A.P.A. classification and U.S. Product Standard PS 1-83.
b) Plywood substrates are acceptable only in dry areas and only on interior floor or countertop installations. Use exclusively new plywood.
c) Plywood is not an acceptable sub-floor in heavy commercial and industrial installations.
d) Plywood shall be installed smooth face up. Offset joints of sub-floor and underlayment.
e) When on joists 16" (40.6 cm) O.C. (on center)
f) plywood sub-floors shall consist of 2 layers each 5/8" (16mm) thick, laid cross-grained and with 1/4" (6 mm) gaps between sheets. The plywood shall be screwed 6" (15.2 cm) O.C. around the perimeter and 8" O.C. throughout the body of the panel in each direction.
g) For light residential installations, an overlay of 1/2" (12 mm) thick exterior grade plywood over a 1" (24 mm) nominal board sub-floor is permissible. Maintain a 1/4" (6 mm) gap between sheets.
h) In all cases, the design of such floors shall not allow a deflection of more than 1/360th of the span under live and dead loads.
i) The adjacent edges of the plywood sheets shall not be more than 1/32" (.8 mm) above or below each other.
j) All wood sub-floors shall be well vented from below.

4) Cementitious Backerboard Units Installation of Floors, Decks or Countertops

a) Using a 1/4" x 1/4" square-notched trowel, apply a polymer-modified thin-set mortar to the sub-floor or base.
b) Immediately place cement backer unit (CBU) panels onto fresh mortar. Leave a 1/8" gap between panels. Stagger the panels to avoid a continuous gap line across the surface.
c) Fasten panels every 6" to 8" on center throughout the field and within 1/2" to 2" from the edge using 1 1/4" concrete backerboard screws or 1 1/2" galvanized roofing nails.
d) Fill all corners and the joints between panels in all installations with appropriate thin-set mortar.

5) Wall and Ceiling Installation

a) General Framing – All framing should comply with local building code requirements and be rigid and plumb with a maximum deflection or movement of 1/360 under all intended live (including wind and rain) and dead loads. Studs should be spaced a maximum of 16" on center.
b) Wall and Ceiling – Edges of backerboard parallel to framing should be continuously supported. Studs above a shower floor should be either notched or furred to accommodate the thickness of the waterproof membrane or shower pan. The surround opening for a tub or precast shower receptor should not be more than 1/4" longer than unit to be installed.
c) Backerboard Installation

i. Fasten backerboard to studs every 6" to 8" on center throughout the panels and within 1/2" to 2" from panel edges. Leave a 1/8" gap at all joints and corners.
ii. Where open mesh wrapped edges meet, fill the gap completely with thin-set mortar.
iii. On all joints and corners, prefill the gap with thin-set mortar, then embed 2" fiberglass mesh tape and smooth.

6) Gypsum Surfaces

a) Gypsum dry wall panels and gypsum plaster walls shall be set with a latex modified thin-set mortar or mastic.
b) Gypsum-based floor patching compounds are not acceptable substrates to receive tiles.

7) Metal
   a) Metal substrates shall be rigid, solidly fixed, dry, well sanded and free of dust, oil, grease, primer and all deleterious substances which may prevent or diminish the bond.
8) Tiling over old substrates
   a) Old cement terrazzo, ceramic tile paver, quarry tile, vinyl and vinyl composition floor coverings other than cushion vinyl and asbestos containing vinyl shall be sound, solidly in place, flawless, stripped or sanded, clean, free of dust, wax,release, sealers, soap residue and all other deleterious substances which may prevent or reduce the adhesion. (For further details, see the TCA Handbook for Ceramic Tile Installation.)b. Install tile in accordance with appropriate ANSI A108 specifications and manufacturer's directions.

B) Expansion joints, control joints, insulation joints, etc., must be located in compliance with TCA EJ171 and filled with appropriate materials.
   1) Joints must be carried through all layers of installation materials including tile, setting bed, mortar bed and reinforcing wire. Joints should be every 24' (61 cm) - 36' (91 cm) in both directions for interior installations and 12' (30 cm) - 16' (41 cm) in both directions for exterior installations. (Refer to TCA Handbook, EJ171 and ANSI AN-3.8 for details on placement, size and specifications of materials.)Insert ANSI Reference chosen in Part 1,4,A

C. Install grout in accordance with Grout ANSI A108.10 specifications and manufacturer's directions.

D. Proper curing of grout entails covering installation with non-staining Kraft paper for a period of 72 hours.

[3.3] Cleaning and Protection

A. Using appropriate maintenance products, clean upon completion of setting and grouting; clean all ceramic tile surfaces so they are free of foreign matter. Polish tiles with dry, clean cloth (cheese cloth isrecommended).

B. In the event an acid wash is desirable to remove grout residue, this work must be approved by tile manufacturer and by grout manufacturer, done only with acids approved by these manufacturers and performed only after a curing period of 14 days.

C. Protection: Protect finished installation from traffic and incidental dirt by covering with Kraft paper during construction period.

SIMPLE GROUTING RECOMMENDATIONS:

Throughout History glass tiles and mosaics have been the material of choice, at one time available only to Kings. Glass tiles and mosaics - a translation of primal elements; refined, united, and woven with aesthetic genius. The foundations are ancient and enduring, with Imperial distinction, mysticism and, even today, glass tiles and mosaics continue to reflect the accomplishments of mankind throughout the ages.

So, why can't we get the grouting right?

Is grouting, with the desired results, truly one of the many mysteries of the universe?

I think not.

Let's walk through it.

Clean water, to wash the grout, and cheesecloth - NOT a sponge - is the recommended method of cleanup.

So why is it that we still see far more sponges, including 'Hydrophylic' sponges, than cloth?

My preferred cloth is Terry. I find it works exceptionally. The Terry Cloth fabric has uncut loops in its pile that pickup residues while wiping.

TYPICAL STORY:

The tile installer has done a perfect layout, spending considerable effort to ensure all the cuts and angles are perfect.

The following day, the tile installer planned on having the installation grouted.

Why is it that the least experienced helper is given the grouting job?

However, in this case the helper was aware of correct grouting methods.

"Where is the cheesecloth?" asked the helper.

"Cheesecloth?" exclaimed the journeyman tile setter, "use the sponge provided!"

This new helper was adamant on the correct procedures, "I want another pail to mix the grout in, and even a third pail to have plenty of CLEAN water to wash the CHEESE-CLOTH, a supply of several square metres of cheesecloth, a new rubber grouting float, and a slow speed mixer - up to 350 RPM."

Once the supplies where gathered, the helper only mixed a suitable amount of grout to cover an area division, where it was known that another mix would not have to be made, to join at a conspicuous area. If it were necessary to make another mix, the helper knew to accurately measure every mix, powder to water ratio, so it would be as close a match as possible.

Dry mix the ingredients when combining bags; especially, if they have sat or vibrated in the back of a vehicle while in transport.

After having wet-mixed the grout it was left to stand or "slack" for 10 - 15 minutes - this allows the chemicals to expand and for the grout to become totally wetted out.

Once this was completed, he then re-mixed the grout, ensuring the consistency was correct (consistency of butter), the shape you make it is the shape it should stay.

It was time to grout!

Floating some of the grout, the helper eased the grout into the joints to avoid scratching the glass, while only doing an area large enough for easy control, not too large and not over-reaching. Once the grout was filled into the joints, he carefully trowelled diagonally across the joints, to remove all surplus grout, while still keeping the grouting material as high in the joints as possible. The optimum is to leave only a haze to be cleaned up with damp cheesecloth.

The grout was then left for about 20-30 minutes. Moving along to the next section, the helper repeated his actions.

After the 30 minutes interval, the helper returns to softly dry polish the previous section.

The advantage of cheesecloth or Terry cloth over the sponge is obvious when you attempt to wring out all the water. With a sponge you cannot. Always, there is too much water left in the sponge. This water then puddles in the low spot or washes over the tiling and grouting, which causes discoloration, patchiness and an overall uneven appearance.

On the other hand, the cheesecloth allows the excess water to be wrung out of it. When cleaning is taking place, the loops of the cloth can actually pick up surplus grout and, instead of depositing it and excess water in an unwanted area, the cloth can then be shaken out, washed and reused.

Once the haze re-appears, this can be lightly polished off with a clean, dry piece of cloth.

NO WATER. (SEE BELOW: conclusions)

If possible, damp cure for 72 hours by covering with Kraft paper, making sure to tape down all the edges. With cleanup finished, it's now time to leave this area for 72 hours. (floor application)

For wall applications, lightly mist joints with spray bottle for 72 hours. A slow-damp cured grout is always the best for strength and stain resistance.

SUMMARY

Tools needed:

- 3 x 4-gallon (20litre) pails
- Several square yards of cheesecloth or Terry cloth
- Rubber grouting float / good quality

- Slow speed mixer / even by hand is perfectly good
- 1 measuring vessel / size to compare with installation size, for the powder
- 1 smaller measuring vessel for water
- Kraft paper to cover installation (floor application)

CONCLUSION

1. Mix grout - must be workable (butter-like consistency).
2. Float grout and fill joints as evenly as possible.
3. Remove as much grout as possible with grout float, then with damp cheesecloth coming diagonally across installation.
4. When haze forms, after about 30 minutes, lightly polish off with dry cheesecloth and again if necessary.
5. Damp cover for 72 hours

CLEANING AND MAINTENANCE RECOMMENDATIONS

As with all interior or exterior surfacing materials, glass tiles and mosaics require minimal care in order to maintain a satisfactory appearance and sanitation.

Initial Cleaning and Maintenance:

The single most important step for future daily maintenance involves the complete removal of any remaining grout haze and construction dirt.
This can usually be conducted by simply scrubbing, using a cloth, and hot water with a weak dilution of close-to-neutral pH detergent additive, followed by a thorough rinsing and removing the rinse water with a wet-vacuum or dry toweling. When applying dense, low porosity tiles the joints should be treated with penetrating type sealers, not coatings. Follow the sealer manufacturer's recommendations and instructions. For grout joints, it is recommended that the joints be initially sealed after 7 to 10 days curing. The primary purpose of a sealer is to render joints less porous and thereby more stain resistant. The Glass itself is completely impervious. Once initial cleaning has been thoroughly completed, our daily maintenance procedures can be followed for continuous long-lasting beauty. The primary benefit of selecting the glass tile for an application is in its ongoing low maintenance attributes.

Daily Maintenance:

Wall surfaces usually require only a simple wiping with room temperature water and a weak dilution of close-to-neutral pH detergent additive
For floors, general cleaning should be performed first by sweeping or vacuuming, to remove loose soil or other surface contaminants. Apply a solution of close-to-neutral detergent cleaner, agitating with a medium bristle deck-brush, then remove all residues, mopping with clean water.
High quality glass tile surfaces have a dense, low absorptive body that will resist the penetration of contaminants, harsh cleaners, and aggressive scrubbing; however, the grout joints may be adversely affected by such activity. They become weak and discolor over time.
We recommend that you test all cleaning materials and techniques whenever you are selecting or changing your cleaning materials. The test area should be in an inconspicuous area. If unexpected problems do occur, the area cannot be seen. If the cleaning agent does not adversely affect the appearance of the installation, please follow these procedures. Frequency and duration of the maintenance procedure will depend entirely on the soil load. Keeping an area primarily clean, with a regular cleaning regimen, will eliminate all need for more dynamic or aggressive cleaning activities. Again, glass, by its very nature, is low maintenance.

There are steps that are critical and should always be remembered for the successful maintenance of glass tiles:

1) All spills should be cleaned as quickly as possible. Sweep or vacuum a floor of all loose dirt and other foreign materials.
2) Use only the manufacturer's recommended dilution of detergents. More is not always better; higher concentrations of detergent in the cleaning solution will only make it more difficult to rinse and potentially leave a residue, which may create slippery floor conditions. If the floor is exposed to excessive spills, large amounts of traffic, a stronger cleaning agent may be necessary. These stronger cleaning agents should be on the alkaline side of the pH scale and generally have a pH of 9 or higher in the concentrated form. Follow the manufacturer's recommendation at all times, for usage and dilutions, when using these products.
3) Allow the product to remain on the floor, giving the detergent solution time to chemically act on the soil load - generally, 5 - 10 minutes is sufficient.
4) Scrub with a white or clear nylon pad, bristle, or 'Terry' towel.
5) For aggressive cleaning, rinse thoroughly with clean water, several times if necessary, using clear water to remove the dirt and detergent solution and emulsified soil. Rinsing is a critical step in the maintenance procedure. Remove the rinse water with a wet vacuum, buff with a dry mop or toweling. If dirty detergent solution is not removed and is allowed to dry on the surface, a coating will form which is very difficult to remove and maintain.
6) All surface cleaning and maintenance materials should be selected carefully to ensure they are not coatings and that they will only alter the surface sufficiently to create unsafe walking conditions and adversely affect cleaning.

FREQUENTLY ASKED QUESTIONS

Q: Should organic adhesive or mastic be used to install Malaga Cove Glass Tiles?

A: Organic adhesive is not an appropriate setting material for Malaga Cove Glass Tiles in wet areas, such as showers or bathtub enclosures.

Also, some organic adhesives may yellow behind clear or translucent tiles.

Organic adhesive does not cure, as do cementitious based products. Adhesives dry and bond when exposed to air, given sufficient time. As the adhesive first begins to dry and set at the edges, on larger glass tiles this will seal off the back of the tile, like putting a lid on a can. Impervious materials, such as glass mosaics, can only properly set when installed using polymer-modified cementitious or epoxy based mortars. Again, it is important to note that time is required for the adhesive to set properly.

Q: Should I use non-sanded grout for Malaga Cove Glass 1"x 1"mosaic tiles?

A: Use sanded grouts for all Malaga Cove Glass. Nonsanded grout joints have a recommended maximum thickness is 1/8" and for sanded they begin at 1/8" thickness.

Malaga Cove recommends polymer-modified sanded grout or even modified epoxy grout. Follow manufacturer's recommendations for preparation and use.

It's important to note that all glass and sand are both primarily made up of quartz or silica materials. The sand within the grout should be carefully applied, not to scratch the surface. The cementitious sanded grout should not be mixed too dry, making it necessary to aggressively pack gritty grout into the joints. Also, it cannot be too wet so that it will run. Mix it to a consistency of butter so that it can be shaped and easily fill the joints without force. The acrylic or latex materials in polymer-modified grouts help to encapsulate the sand making it less gritty. We recommend adding a latex admix to standard sanded grout, use an already polymer-modified dry mix grout powder, or use a modified epoxy grout – for a full, flush grout joint.

Q: Are wood or gypsum wallboard substrates acceptable for Malaga Cove Glass installations in wet areas?

A: For wet areas, neither of these substrates is acceptable for direct application, not without a proper underlayment membrane. The most ideal substrate is a cement backer unit (CBU) such as: Durock, WonderBoard, C-Cure Board, PermaBase cement board, Util-A-Crete / ProTEC Backerboard, or Hardibacker Board installed to manufacturer recommendations. Additional products may include: Wedi Board, Georgia-Pacific / Denshield, type underlayments designed for wet area applications.

Q: What size notch trowel do I use to set Malaga Cove Glass?

A: For glass mosaics, commonly used is 3/16"x 1/4" V-notch trowel. Review setting materials manufacturer's recommendations.

Beautiful Floors
Environmentally Sound

Hardwood Accessories - Prefinished Engineered Flooring

For 9/16”-thick EcoTimber® Classics and Exotics flooring products
(Bamboo and Rustics accessories shown on separate documents)

v. 030405

The profiles in this document are actual size when printed at full scale. However, shrinkage and scaling may occur, especially when the document is faxed. Before using the graphics for measuring purposes, please verify measurements to ensure your printed copy is to scale.

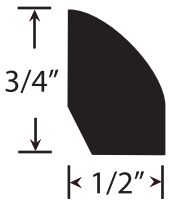

Base Shoe

- 78” Lengths
- Prefinished

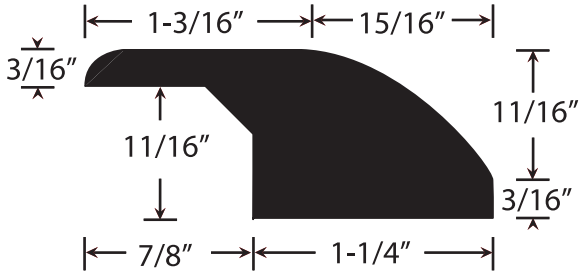

Overlap Reducer

- For use with Engineered Flooring in floating applications
- 78” Lengths
- Prefinished

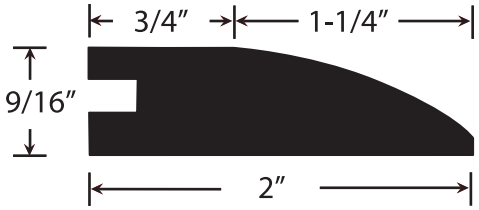

Standard Reducer

- 78” Lengths
- Prefinished

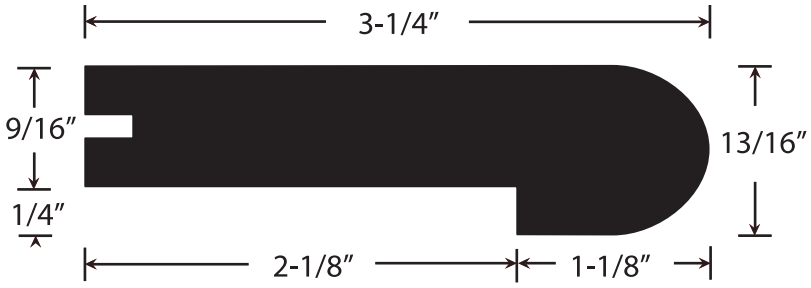

Standard Stair Nose

- 78” Lengths
- Prefinished

Hardwood Accessories - Prefinished Engineered Flooring

(Cont.)

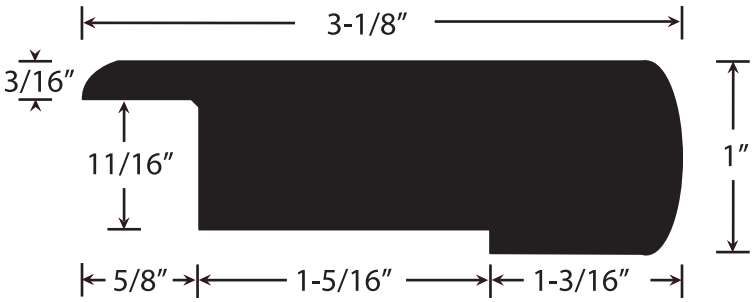

Overlap Stair Nose

- For use with Engineered Flooring in floating applications
- 78" Lengths
- Prefinished

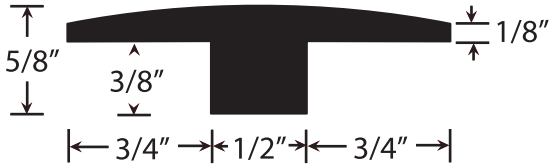

T-Moulding

- 78" Lengths
- Prefinished

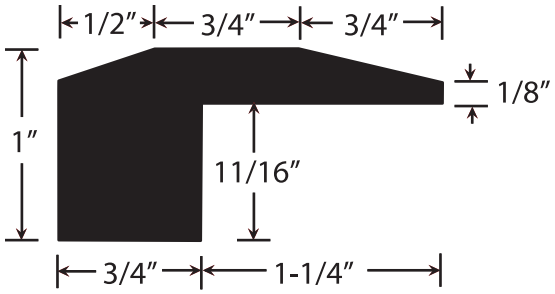

Threshold

- 78" Lengths
- Prefinished

About Overlap Accessories:

When installing Engineered Bamboo Flooring using the floating method, please utilize the Overlap Stair Nosing and Overlap Reducer. Overlapping accessories allow the floating floor to expand and contract without exerting pressure on the accessories. Tongue-and-groove accessories should only be used for glue-down and nail-down applications.

Beautiful Floors
Environmentally Sound

ECOTIMBER® PREFINISHED FLOORING CLEANING & MAINTENANCE INSTRUCTIONS

v. 021405

Congratulations on your purchase of EcoTimber® prefinished flooring. Our durable factory finishes are easy to maintain and should provide years of protection for your wood or bamboo floor.

Please Note: Flooring should be one of the last items installed in a remodel or new construction project. Tradespeople performing work on other elements of the space are one of the most common causes of scratching and damage to prefinished flooring. Affix felt padding to the legs of all furniture to prevent scratching when the items are moved. After installation, follow these simple guidelines:

Remove Grit - Care should be taken to prevent debris such as dirt, sand and grit from accumulating on the surface of your floor. Walk-off mats should be placed inside and out at all exterior exits, and the floor should be swept or vacuumed regularly. Work boots and shoes that may have pebbles lodged in the soles should be removed prior to entering.

Clean Regularly - To clean your EcoTimber prefinished floor, we recommend the Bona-X® Swedish Formula Hardwood Floor Cleaner, available at most flooring retailers. Citrus cleaners and vinegar mixed with water are also effective at removing scuffs, dried spills, and dust film. With water or any other cleaning agent, be sure to thoroughly ring out the applicator or mop prior to applying it to the floor. To remove hard-to-clean substances such as chewing gum, use Goof-Off® or Goo-Gone®, available at most hardware stores and supermarkets. Floor wax and oil should not be used.

Avoid Standing Moisture - Never wet-mop a hardwood floor, and always clean up spills and standing water as soon as possible. Moisture that is allowed to seep into the seams between the planks may accumulate and cause damage to your flooring.

Top-Coating - In areas such as bathrooms, kitchens, and spaces where food service occurs, top-coating the floor will help prevent against moisture damage. To top-coat your EcoTimber® floor, lightly screen (abrade) the top surface of the factory finish and then apply Traffic® or Mega® Swedish floor finish (manufactured by BonaKemi®). In heavy food service areas such as restaurants, two to three top-coats are recommended. Periodic top-coating in any area will help prolong the life and restore the new appearance of your floor.

Beautiful Floors
Environmentally Sound

Prefinished Engineered Wood Flooring Installation Instructions

READ THESE INSTRUCTIONS THOROUGHLY BEFORE BEGINNING INSTALLATION. IN ADDITION TO THESE INSTRUCTIONS, WE RECOMMEND THAT THE INSTALLER FOLLOW ALL INSTALLATION GUIDELINES AS SET FORTH BY THE NATIONAL WOOD FLOORING ASSOCIATION.
Note: Installation instructions for EcoTimber Australian Chestnut flooring are in a separate document.072406

PRE-INSTALLATION JOBSITE REQUIREMENTS

EcoTimber cannot be held responsible for site conditions.

Carefully examine the flooring prior to installation for grade, color, finish and quality. Ensure adequate lighting for proper inspection. If flooring is not acceptable, contact your distributor immediately and arrange for replacement. EcoTimber cannot accept responsibility for flooring installed with visible defects. Prior to installation of any flooring, the installer must ensure that the jobsite and subfloor meet the requirements of these instructions. EcoTimber is not responsible for flooring failure resulting from unsatisfactory jobsite and/or subfloor conditions.

Hardwood flooring should be one of the last items installed in any new construction or remodel project. All work involving water or moisture should be completed before flooring installation. Water and wood do not mix. Installing flooring onto a wet subfloor will most likely cause cupping, tip & edge raising, telegraphing of core and subsequent gapping.

Room temperature and humidity of installation area should be consistent with normal, year-round living conditions for at least one week before installation of wood flooring. Room temperature of 65-75°F and a humidity range of 30-50% is recommended. Humidity levels below 30% will most likely cause movement in the flooring, including gapping between pieces and possible cupping and checking in the face.

Store the wood flooring in the UNOPENED boxes at installation area for 24 -72 hours before installation to allow flooring to adjust to room temperature. Do not store the boxes of flooring directly on concrete. These engineered wood floors DO NOT need any moisture equalization prior to installation and should be installed from just-opened boxes. DO NOT OPEN more than a few boxes in advance of installation and only the number of boxes that will be installed within the next few hours. Only open enough boxes to ensure a good mix of lengths and color.

PRE-INSTALLATION SUBFLOOR REQUIREMENTS

All Subfloors must be:

- Dry and will remain dry: Subfloor must remain dry year-round. Moisture content of wood sub floors must not exceed 11%, concrete must not exceed 3 lbs. per Calcium Chloride Test.
- Structurally sound
- Clean: Thoroughly swept and free of all debris (If being glued down, subfloor must be free of wax, grease, paint, sealers, & old adhesives etc., which can be removed by sanding)
- Level: Flat to 3/16” per 10-foot radius

Wood subfloors must be dry and well secured. Nail or screw every 6” along joists to avoid squeaking. If not level, sand down high spots and fill low spots with an underlayment patch.

Concrete subfloors must be fully cured, at least 60 days old, and should have minimum 6-mil polyfilm between concrete and ground. Subfloor should be flat and level within 3/16” per 10’ radius. If necessary grind high spots down and level low spots with Ardex® K-15 Portland Leveling Compound.

All concrete should be tested for moisture using a Calcium Chloride Test, and the result must not exceed 3 lbs. Ceramic tile, resilient tile and sheet vinyl must be well-bonded to subfloor, in good condition, clean and level. Do not sand existing vinyl floors, as they may contain asbestos.

If gluing down on concrete (even if you believe it is dry) which is on or below grade, it is highly recommended to install sheet vinyl first and then glue the wood flooring on top of the vinyl, as this provides an effective permanent moisture barrier. Another alternative to sheet vinyl is to use the Bostik® or Franklin® Moisture Barrier Systems, which are warranted by their manufacturers.

Remember, a concrete slab on /below grade that measures dry today may become moist in the future due to rising groundwater. Installing a moisture barrier now may be viewed as an insurance policy against concrete becoming wet in the future. This will lead to subsequent floor failure. EcoTimber is not responsible for site related moisture issues.

EcoTimber flooring is NOT WARRANTED FOR USE OVER RADIANT HEAT. While many customers have used EcoTimber® flooring successfully over radiant heat systems, EcoTimber cannot be held responsible in situations where the radiant heat system was not operated properly. After a floor has been damaged, it is impossible for a manufacturer to verify conclusively whether or not improper use was the cause. If you do choose to void the warranty by using radiant heat, use only a floating installation method. The subfloor should never exceed 80°F. Check with the radiant heat manufacturer's suggested guidelines to limit the maximum water temperature inside heating pipes. Switch off heating system one or two days before flooring installation and bring heat up slowly after installation. If the system is turned off and on, always bring the temperature back up slowly. Damage may result from rapid heating and/or rapid shedding of moisture that the wood may have taken on while the system was off.

INSTALLATION TOOLS

For all installation methods:

- Tape measure
- Tapping block (trimmed piece of flooring)
- Pencil
- Pry bar or pull bar
- Chalk line
- Wood or plastic spacers (3/8")
- Crosscut power saw
- Hammer
- 3M® Blue Tape

For glue-down installation method (recommended), you'll also need:

- Flooring adhesive: EcoTimber® Zero-VOC Adhesive or Bostik® Best
  (Note: Use only urethane adhesives – DO NOT USE WATER BASED MASTICS as they will cause this floor to fail)
- On concrete slabs, which are on/below grade, we strongly recommend installing sheet vinyl first and then installing the wood floor on the vinyl or using the Bostik® or Franklin® Moisture Barrier Systems.
- Trowel per flooring adhesive manufacturer's recommendations.

For nail-down installation, you will also need:

- Bostich® MIIIFS – Industrial Flooring Stapler – air stapler/nailer with 9/16" Naildown adapter, Bostich® 1/2" x 1-1/2" staples for the Floor Runner stapler
- Air compressor

For floating installation, you'll also need:

- EcoTimber® Floating Floor Pad or equivalent 1/8" thick underlayment
- 6-mil polyfilm (if installing on or below grade and not using EcoTimber® Floating Floor Pad)
- Eurobond® D3 T&G Adhesive or Franklin® Titebond 2 PVAC glue

- Duct tape

Acceptable subfloor types:

- Plywood (at least 1/2” thick)
- Underlayment grade particleboard - floating/glue-down only)
- OSB (at least 3/4” thick)
- Concrete slab (floating/glue-down only)
- Existing wood floor
- Ceramic tile (floating/glue-down only)
- Resilient tile & sheet vinyl (floating/glue-down only)

STARTING YOUR INSTALLATION

Make sure subfloor is tested for moisture first and is properly prepared.

Since wood expands with any increase in moisture content, always leave at least a 3/8” expansion space between flooring and all walls and any other permanent vertical objects, (such as pipes and cabinets). This space will be covered up once you reapply base moldings around the room. Use wood or plastic spacers during installation to maintain this 3/8” expansion space. No area of connected flooring can span greater than 40 feet in width or 120 feet in length. For larger spans, install T-moldings or other transition pieces that allow the flooring to expand and contract.

Work from several open boxes of flooring and “dry lay” the floor before permanently laying the floor, but never open more than a few boxes in advance. This will allow you to select the varying grains & colors and to arrange them in a harmonious pattern. It also allows you the opportunity to select out very dark/light pieces for use in hidden areas in order to create a more uniform floor. Remember, it is the installers’ responsibility to determine the expectations of what the finished floor will look like with the end user first and then to cull out pieces that do not meet those expectations.

Begin installation next to an outside wall. This is usually the straightest and best reference for establishing a straight working line. Establish this line by measuring an equal distance from the wall at both ends and snapping a chalk line. The distance you measure from the wall should be the width of a plank plus about 3/8” for expansion space. You may need to scribe cut the first row of planks to match the wall in order to make a straight working line if the wall is out of straight.

You may want to dry lay a few rows, (no glue or nails), before starting installation to confirm your layout decision and working line. When laying flooring, stagger end joints from row to row by at least 8”. When cutting the last plank in a row to fit, you can use the cut-off end to begin the next row. If cut-off end is 8” in length or less, discard it and instead cut a new plank at a random length and use it to start the next row. Always begin each row from the same side of the room.

To draw planks together, always use a tapping block (a short piece of flooring), as tapping the flooring itself will result in edge damage. For best results, flip the tapping block upside down and use the groove edge to tap the tongue edge of the plank being installed. When near a wall, you can use a pry bar to pry close the side and end joints. Take care not to damage edge of flooring. For glue down & floating applications, use 3M® Blue Tape to hold any pieces which might have side bow and need to be held straight & tight until the adhesive sets up.

GLUE DOWN INSTALLATION - RECOMMENDED

Make sure subfloor is tested for moisture content first and is properly prepared.

On concrete subfloors, which are on or below grade (ground level), always assume the worst and even if they measure dry, we now recommend taking one of the following two installation steps to ensure a trouble-free installation. The cost of the precaution is little when compared to the cost of ripping out and replacing a floor that has failed due to high moisture from the subfloor.

Method #1: We recommend installing a sheet vinyl floor first and then gluing down our wood floor over the sheet vinyl. Follow the vinyl manufacturer's recommendations.

Method #2: Both Franklin® and Bostik® now offer Moisture Barrier Systems on which they provide a warranty that moisture will not pass through and damage your wood flooring. Follow manufacturer's recommendations for application/installation.

Follow adhesive manufacturer's instructions for proper trowel size, minimum temperature, adhesive set time and open times before beginning installation of flooring.

Once the spread adhesive has setup sufficiently per adhesive manufacturer's instructions, lay the first row of flooring with groove facing the wall, and continue laying flooring. Always check your working lines to be sure the floor is still aligned. Use tapping block to fit planks together, but be careful not to let installed floor move on the wet adhesive while you are working. Always leave at least a 3/8" expansion space between flooring and all walls and vertical objects (such as pipes and cabinets). Use wood or plastic spacers during installation to maintain this expansion space. Remember to stagger end joints from row to row at least 8" apart.

When first section is finished, continue to spread adhesive and lay flooring section by section until installation is complete. Use a damp cloth to IMMEDIATELY REMOVE ANY ADHESIVE that gets on the flooring surface. If adhesive cannot be completely removed with a damp cloth, use the manufacturer's recommended adhesive remover. Never let flooring adhesive dry completely on the finished surface.

Walk each section of flooring in order to make sure it is well bonded to the subfloor within the adhesive working time. Flooring planks on the perimeter of the room may require weight on them until adhesive cures enough to hold them down.

STAPLE/NAIL DOWN INSTALLATION

Make sure subfloor is tested for moisture content first and is properly prepared. Use Bostich® MIIIFS Industrial Flooring Stapler which is an air stapler/nailer with 9/16" nail-down adapter or a stapler/nailer of your choice after testing to make sure that stapling/nailing will not cause dimpling (localized raised edges) in the finished floor. (Note: be sure to look at the face of the installed flooring at a low angle from a distance to see if dimpling is occurring as it is hard to see when directly above the floor.) If dimpling does occur, STOP and adjust the stapler/nailer shoe and angle/place of staple entry in order to avoid it. EcoTimber is not responsible for dimpling.

For the first and second starting rows: lay first plank inside chalk line with grooved edge toward wall. Install entire first row in the same manner. Always leave at least a 3/8" expansion space between flooring and all walls and vertical objects (such as pipes and cabinets). Use wood or plastic spacers during installation to maintain this expansion space. In order to affix these first rows, as it is difficult to get the nail gun in place next to the wall, you may wish to set these rows in mastic and glue them down rather than face nailing them and leaving unsightly nail holes which must be filled with putty to match the wood floor.

After gluing down these starting rows with a urethane adhesive, (or Liquid Nails® LN-901 adhesive), set weight on top of these rows and allow them to set before commencing stapling/nailing the additional rows, as nailing the adjacent rows may cause the starting rows to subsequently move. Make sure the starting rows are straight and drawn tight.

Subsequent rows: Lay by using floor nailer/stapler to blind-nail top inside edge of tongue at a 45 degree angle. Nail each board every 8" and within 2" of each end. Remember to stagger end joints from row to row at least 8" apart and use a tapping block to fit boards together. It may be necessary to face-nail in doorways or tight areas where the nailer/stapler can't fit, (or glue down in

these areas and weight them while the mastic sets). The last two rows will need to be face-nailed, (or glued down), in the same manner as the first two rows.

Always make sure to visually check the installed floor as you go to ensure that the stapling/nailing is not causing dimpling on the face. (Note: be sure to look at the face of the installed flooring at a low angle from a distance to see if dimpling is occurring as it is hard to see when directly above the floor.) If dimpling does occur, STOP and adjust the stapler/nailer shoe and angle/place of staple entry in order to avoid it. EcoTimber is not responsible for dimpling.

FLOATING INSTALLATION

Make sure subfloor is tested for moisture content first and is properly prepared.

When using EcoTimber® Floating Floor Pad, no additional moisture barrier is necessary. If using an alternative 1/8" thick pad and installing below or on grade, polyfilm is required.

Laying polyfilm: lay 6-mil polyfilm with seams overlapped 8". Fasten seams every 18-24" with duct tape. Run the outside edges of film up perimeter of each wall 4". Trim after flooring installation is complete.

Laying pad: lay EcoTimber® Floating Floor Pad or equivalent 1/8" thick underlayment by butting edges, not overlapping. Tape full length of the seam with duct tape. Leave 1/2" space between pad and all walls and permanent vertical fixtures.

Installing the floor: start first row with groove toward wall. Glue end joints of first row by applying a small but continuous bead of Eurobond® D3 T&G Adhesive or Franklin® Titebond 2 PVAC glue to bottom side of the groove. Always leave at least a 3/8" expansion space between flooring and all walls and vertical objects such as pipes and cabinets. Use wood or plastic spacers during installation to maintain this expansion space. Lay subsequent rows of flooring by applying glue to side and end joints and fitting planks together with a tapping block. Remember to stagger end joints from row to row at least 8" apart.

Clean up any adhesive that is on the face of the floor by using a damp rag – DO NOT allow adhesive to dry on the flooring face as it is difficult to remove without damaging the finish.

AFTER INSTALLATION

- Flooring should be one of the last items installed in a project. In order to protect the floors while other trades are finishing their work prior to final cleanup and turnover to the owner, use rosin paper and only use 3M® Blue Tape to hold the rosin paper to the floor (other blue tapes may damage the finish). Clean the floor thoroughly before laying the rosin paper to ensure that no debris is trapped underneath. DO NOT USE plastic film or other non-breathing coverings as this can cause the floor to become damaged from humidity buildups.
- Remove expansion spacers and reinstall base and/or quarter round moldings to cover the expansion space.
- Dust mop or vacuum your floor to remove any dirt or debris.
- It is suggested that you buff the floor with lambs wool pads in order to remove any loose splinters, residues, handprints, foot prints, etc.
- Install any transition pieces that may be needed (reducers, T-moldings, nosing, etc.).
- If using glue-down or floating installation methods, do not allow foot traffic or heavy furniture on floor for 24 hours.

CLEANING, MAINTENANCE, & REFINISHING

Please visit our website, www.ecotimber.com, for cleaning, maintenance and re-finishing instructions, or call (888) 801-0855.

Beautiful Floors
Environmentally Sound

ECOTIMBER® LIMITED COMMERCIAL WARRANTY

For EcoTimber® Prefinished Classics, Exotics, Australian Chestnut, Orchard Walnut, Engineered Bamboo, and Solid Bamboo Flooring

EcoTimber warrants that the above-mentioned prefinished flooring products:

- Are free from defects in lamination, milling and assembly and will remain free from these defects for **25 yrs**.
- Will remain structurally sound during normal moisture changes provided that EcoTimber subfloor and installation requirements were met.
- Is protected by an aluminum oxide enhanced finish that will not wear through for **three years** from date of purchase, if recommended maintenance steps are followed (not valid for unfinished Bamboo).

This warranty is made subject to the following conditions:

- The EcoTimber Commercial warranty expressly permits high foot traffic counts - subject to normal residential foot wear consideration and patterns. EcoTimber defines Commercial as use in an interior environment that requires customer/client foot wear as normally envisioned in a well cared for residential living environment. The environment requires a "walk off" area that isolates the wood floor from direct outdoor entry and ensures proper area and surface material necessary to remove unreasonable amounts of moisture and abrasives from foot wear before coming in contact with the wood floor (i.e. in an interior entrance to a shopping mall, an exterior entrance with a large floor mat). Commercial applications may include professional offices and retail boutique where an interior mall environment assures that foot wear is clean, free of abrasive or moisture laden particles and is otherwise representative of normal interior residential foot wear.
- In Commercial applications, normal maintenance is considered to be daily vacuuming, dust mopping or light damp mopping to remove obvious visual dirt, abrasive substances or foreign particles. Additionally, depending on overall traffic, it is recommended that an approved dress coat be applied at least twice yearly.
- This warranty is not transferable; it extends only to the original consumer purchaser. Installation must be according to recommended procedures and conditions found in EcoTimber's most current Installation Instructions.
- **Room temperatures below 50°F. or above 80°F., or relative humidity below 35% or above 65% will VOID all warranties. These acceptable temperature and relative humidity ranges apply not only to the installation conditions, but also to the year-round environment of the floor.**
- Maintenance must be according to recommended instructions found in EcoTimber's Installation & Maintenance guide. Floor must not be exposed to extreme heat, dryness, moisture, water saturation (including wet mopping), and other sources of extreme moisture or extreme changes in moisture. Alteration or repair that is not authorized by EcoTimber will void the warranty.
- Warranty excludes installation over radiant heat systems, impact damage or wear from furniture, seating or fixtures on casters, or equipment used without proper protection. Warranty excludes indentations, scratches or surface damage caused by lack of proper maintenance, misuse, negligence, spiked heel shoes, pet claws, water, erosion, pebbles, sand and other abrasives. No warranties apply to product designated as 'B' grade, thrift, antique, bargain, economy, or cabin grade, or nonstandard items. Such product is sold "as is".
- Over time, normal exposure to sunlight will bring about changes in the shading of any hardwood floor; these changes may vary in areas of the floor that are blocked from sunlight, such as under area rugs. This is not a product defect.
- Any damage that occurs during shipping is the responsibility of the shipping company.

If EcoTimber accepts a claim under this warranty, it will repair or replace, at its option, the affected flooring material. If flooring product for which the claim is being made is no longer available, EcoTimber will replace affected flooring material with product of equal or greater value.

Any claims for warranty must be made in writing, within 30 days after the condition has been detected. If after a reasonable number of attempts EcoTimber is unable to correct the defect covered under this warranty, EcoTimber will refund, if requested, the purchase price for the portion of the floor that fails. EcoTimber reserves the right to have a designated representative inspect the floor and remove samples for evaluation of claim.

This warranty is limited to a one time repair or replacement of defective material and shall be the buyer's exclusive remedy. Labor costs for installation, removal, or re-installation are NOT included. No other warranties, express or implied, are made and under no circumstances shall EcoTimber be liable for any loss or damage arising from the purchase, use or inability to use this product or any special, indirect, incidental or consequential damages, including any possible “chemical sensitivity” reactions to off-gassing from our products. This warranty gives you specific legal rights, and you may also have other rights, which vary from state to state.

1611 Fourth Street • San Rafael, CA 94901 • t (415) 258-8454 • f (415) 258-8455 • www.ecotimber.com

Beautiful Floors
Environmentally Sound

ECOTIMBER® LIMITED RESIDENTIAL WARRANTY

For EcoTimber® Prefinished Classics, Exotics, Australian Chestnut, Orchard Walnut, Engineered Bamboo, and Solid Bamboo Flooring

EcoTimber warrants that the above-mentioned prefinished flooring products:

- Are free from defects in lamination, milling and assembly and will remain free from these defects for a **lifetime**.
- Will remain structurally sound during normal moisture changes provided that EcoTimber subfloor and installation requirements were met.
- Is protected by an aluminum oxide enhanced finish that will not wear through for **twenty-seven years** under normal residential use, if recommended maintenance steps are followed (not valid for unfinished Bamboo).

This warranty is made subject to the following conditions:

- This warranty is not transferable; it extends only to the original consumer purchaser. Installation must be according to recommended procedures and conditions found in EcoTimber's most current Installation Instructions.
- **Room temperatures below 50°F. or above 80°F., or relative humidity below 35% or above 65% will VOID all warranties. These acceptable temperature and relative humidity ranges apply not only to the storage and installation conditions, but also to the year-round environment of the floor.**
- Maintenance must be according to recommended instructions found in EcoTimber's Installation & Maintenance guide. Floor must not be exposed to extreme heat, dryness, moisture, water saturation (including wet mopping), and other sources of extreme moisture or extreme changes in moisture. Alteration or repair that is not authorized by EcoTimber will void the warranty.
- Warranty excludes installation over radiant heat systems impact damage or wear from furniture, seating or fixtures on casters, or equipment used without proper protection. Warranty excludes indentations, scratches or surface damage caused by lack of proper maintenance, misuse, negligence, spiked heel shoes, pet claws, water, erosion, pebbles, sand and other abrasives.
- Over time, normal exposure to sunlight will bring about changes in the shading of any hardwood floor; these changes may vary in areas of the floor that are blocked from sunlight, such as under area rugs. This is not a product defect.
- Any damage that occurs during shipping is the responsibility of the shipping company.

If EcoTimber accepts a claim under this warranty, it will repair or replace, at its option, the affected flooring material. If flooring product for which the claim is being made is no longer available, EcoTimber will replace affected flooring material with product of equal or greater value.

Any claims for warranty must be made in writing, within 30 days after the condition has been detected...

If after a reasonable number of attempts EcoTimber is unable to correct the defect covered under this warranty, EcoTimber will refund, if requested, the purchase price for the portion of the floor that fails. EcoTimber reserves the right to have a designated representative inspect the floor and remove samples for evaluation of claim.

This warranty is limited to a one time repair or replacement of defective material and shall be the buyer's exclusive remedy. Labor costs for installation, removal, or re-installation are NOT included. No other warranties, express or implied, are made and under no circumstances shall EcoTimber be liable for any loss or damage arising from the purchase, use or inability to use this product or any special, indirect, incidental or consequential damages, including any possible "chemical sensitivity" reactions to off-gassing from our products. This warranty gives you specific legal rights, and you may also have other rights, which vary from state to state.

WARRANTY REGISTRATION

As soon as you have installed your floor, please complete and mail/fax this section to the address above.

Name_____Address_____

City_____State_____ZIP/Postal Code_____Date of Purchase_____

Date of Installation_____ Square Feet Purchased_____ Date home constructed _____ Home sq.ft._____

Premises: (check one) New Construction ☐ Remodel ☐

Room(s) Installed_____ Installed by (check one) Myself ☐ Professional ☐

Installation Method (check one) Nail ☐ Glue-down ☐ Floating ☐ Over radiant heat ☐

What type of floor did you replace? (check one) Vinyl ☐ Ceramic ☐ Carpet ☐ Wood ☐

1611 Fourth Street • San Rafael, CA 94901 • t (415) 258-8454 • f (415) 258-8455 • www.ecotimber.com

ECO SPEC®
Interior Latex Flat 219

Features

- Low Odor
- Low VOCs
- Quick return to service
- 100% Acrylic
- Dries quickly to a beautiful, washable, and uniform flat finish
- Spatter-resistant

General Description

A low odor, low VOC, 100% acrylic latex flat that provides high hiding, excellent touch up, and a uniform flat finish. ECO SPEC® Interior Latex Flat (219) is ideally suited for commercial, facility management, and residential applications.

ECO SPEC® Interior Latex Flat (219) does not have the odor of conventional paints that contain ingredients known as Volatile Organic Compounds (VOCs).

Recommended For:

- New or previously painted interior wallboard, plaster, ceilings and masonry, as well as primed or previously painted wood and metal
- Use ECO SPEC® Interior Latex Primer Sealer (231) as a first coat when a low odor, solvent free primer/finish system is desired

Limitations:

- Do not paint when air and surface temperatures are below 50° F (10° C)

Product Information

Colors: —Standard:

219 01 Pure White
(May be tinted with up to 2.0 fl. oz. of BENJAMIN MOORE® COLOR PREVIEW® colorants per gallon.)

—Tint Bases:

BENJAMIN MOORE® COLOR PREVIEW® Bases 1B & 2B.

—Special Colors:

Contact your Benjamin Moore & Co. representative.

Certification:

Master Painters Institute MPI #143.
Formulated without lead or mercury.
Formulated without Volatile Organic Compounds (VOCs) or solvents.
This product has been GREENGUARD Indoor Air Quality Certified® by the GREENGUARD Environmental Institute under GREENGUARD Standard for Low Emitting Products.
This product meets Green Seal Environmental standards for organic compounds (VOCs) and other ingredients.

Technical Assistance

Available through your local authorized independent BENJAMIN MOORE® retailer.
For the location of the retailer nearest you, call 1-800-826-2623, see www.benjaminmoore.com, or consult your local Yellow Pages.

Technical Data		*White*
Vehicle Type		100% Acrylic Latex
Pigment Type◊		Titanium Dioxide
Volume Solids◊		34%
Theoretical Coverage At Recommended Film Thickness		400-450 Sq. Ft.
Recommended Film Thickness	– Wet	3.8 Mils
	– Dry	1.2 Mils
Dry Time @ 77˚ F (25˚ C) @ 50% RH	— Dry To Touch	30 Minutes-1 Hour
	— To Recoat	1-2 Hours
	— To Hard Dry	24 Hours
Dries By		Coalescence
Viscosity◊		99 ± 3 KU
Flash Point (Seta)		None
60˚ Specular Gloss	– Flat	2.7 ± 0.5
Surface Temperature at application	– Min.	50˚ F
	– Max.	90˚ F
Thin With:		Clean Water
Clean Up Thinner		Clean Water
Weight Per Gallon◊		10.7 lbs.
Storage Temperature	– Min.	40˚ F
	– Max.	90˚ F

Volatile Organic Compounds (VOC)

**Unthinned	Grams/Liter	0

*** Contact Benjamin Moore & Co. for actual levels, which may or may not be substantially less than stated.*
◊ Values given are for color shown; other colors may vary.

TDS219F

Surface Preparation

Surfaces to be primed must be clean, dry, and free of wax, grease, dust, mildew, water soluble materials, and scaling paint. Glossy areas should be dulled. Apply ECO SPEC® Interior Latex Primer Sealer (231) before and after filling nail holes, cracks, and other surface imperfections. Sand when dry. New plaster or masonry surfaces must be cured 30 days before priming.

WARNING! If you scrape, sand or remove old paint, you may release lead dust. **LEAD IS TOXIC. EXPOSURE TO LEAD DUST CAN CAUSE SERIOUS ILLNESS, SUCH AS BRAIN DAMAGE, ESPECIALLY IN CHILDREN. PREGNANT WOMEN SHOULD ALSO AVOID EXPOSURE.** Wear a NIOSH-approved respirator to control lead exposure. Carefully clean up with a HEPA vacuum and a wet mop. Before you start, find out how to protect yourself and your family by contacting the National Lead Information Hotline at 1-800-424-LEAD or log on to www.epa.gov/lead.

Primer/Finish Systems

For best hiding results, tint the primer to the approximate shade of the finish coat, especially when a significant color change is desired.

A primer is not required on previously painted surfaces in good condition and similar color.

Benjamin Moore & Co. offers a number of specialty primers for use over difficult substrates such as bleeding woods, grease, crayon markings, hard glossy surfaces, galvanized metal, or other substrates where paint adhesion or stain suppression is a particular problem. Your BENJAMIN MOORE® retailer can recommend the right problem-solving primer for your special needs.

Wood, New:
Primer: ECO SPEC® Interior Latex Primer Sealer (231)
Finish: 1 or 2 coats ECO SPEC® Interior Latex Flat (219)

Wood, Repaint:
Primer: ECO SPEC® Interior Latex Primer Sealer (231)
Finish: 1 or 2 coats ECO SPEC® Interior Latex Flat (219)

Plaster/Drywall, New: All plaster surfaces must be thoroughly cured. Drywall surfaces must be free of sanding dust.
Primer: ECO SPEC® Interior Latex Primer Sealer (231)
Finish: 1 or 2 coats ECO SPEC® Interior Latex Flat (219)

Plaster/Drywall, Repaint: Remove any peeling or scaling paint and sand these areas to feather edges smooth with adjacent surfaces. Greasy walls and ceilings must be washed with a strong detergent solution.
Primer: Spot prime as needed with ECO SPEC® Interior Latex Primer Sealer (231)
Finish: 1 or 2 coats ECO SPEC® Interior Latex Flat (219)

Masonry, New:
Rough Masonry:
Primer: ECO SPEC® Interior Latex Primer Sealer (231)
Finish: 1 or 2 coats ECO SPEC® Interior Latex Flat (219)
Smooth Poured or Precast Concrete:
Primer: ECO SPEC® Interior Latex Primer Sealer (231)
Finish: 1 or 2 coats ECO SPEC® Interior Latex Flat (219)

Masonry, Repaint: Remove all peeling and scaling paint by scraping or use of power equipment. All surfaces must be free from greasy or oily deposits. Glossy surfaces must be dulled.
Primer: Spot prime as needed with ECO SPEC® Interior Latex Primer Sealer (231)
Finish: 1 or 2 coats ECO SPEC® Interior Latex Flat (219)

Ferrous Metal, New: All ferrous metal surfaces must be wiped with mineral spirits to remove oily, greasy residue. Solvent and rags should be changed frequently. When shop coat is abraded and rust has developed, remove by sanding or wirebrushing to a sound surface.
Primer: IRONCLAD® Latex Low Lustre Metal and Wood Enamel (363) or MOORCRAFT SUPER SPEC® D.T.M. Alkyd Low Lustre Enamel (Z163)
Finish: 1 or 2 coats ECO SPEC® Interior Latex Flat (219)

Ferrous Metal, Repaint: All surfaces must be free of grease and oil, and cleaned in accordance with SSPC-SP1 "Solvent Cleaning," followed by removal of all loose, scaling paint by hand scraping, or by use of power tools. Rusted surfaces to be cleaned in accordance with SSPC-SP2 "Hand Tool Cleaning" or SSPC-SP3 "Power Tool Cleaning." Glossy surfaces should be dulled. Where heavy rust, corrosion and deteriorated coatings exist, the surface should be abrasive blast cleaned in accordance with SSPC-SP6 "Commercial Blast Cleaning." The surface should be blown off with compressed air to remove traces of blast products, and must be primed within 24 hours.
Primer: IRONCLAD® Latex Low Lustre Metal and Wood Enamel (363)
Finish: 1 or 2 coats ECO SPEC® Interior Latex Flat (219)

Galvanized Metal, New: All new galvanized metal surfaces must be thoroughly cleaned with mineral spirits.
Primer: IRONCLAD® Latex Low Lustre Metal and Wood Enamel (363)
Finish: 1 or 2 coats ECO SPEC® Interior Latex Flat (219)

Galvanized Metal, Repaint: All surfaces must be free of grease, oils and industrial contaminants, cleaned in accordance with SSPC-SP1 "Solvent Cleaning." Peeling or scaling paint must be removed by scraping, shading, or wirebrushing. Rusty surfaces must be wirebrushed and sanded free of rust and spot primed.
Primer: IRONCLAD® Latex Low Lustre Metal and Wood Enamel (363)
Finish: 1 or 2 coats ECO SPEC® Interior Latex Flat (219)

Application

Stir thoroughly before use. Apply one or two coats. For best results, use a BENJAMIN MOORE® Professional custom-blended nylon/polyester brush, BENJAMIN MOORE® Professional roller, or a similar product. This product can also be sprayed. Apply by brush, roller, or spray. Apply generously, using short overlapping strokes, brushing or rolling from unpainted areas into painted areas. Avoid excessive brushing and rolling. Let paint dry before touching up any missed spots. Do not apply when air or surface temperatures are below 50° F (10° C).

Spray, Airless: Fluid Pressure — 1,500 to 3,000 PSI;
Tip — .018 Orifice; Filter — 50 mesh.

Spray, Conventional: See **Thinning/Cleanup**

Thinning/Cleanup

Thinning is unnecessary, but if required to obtain desired application properties, a small amount of clean water may be added. Never add other paints or solvents.

Wash brushes, rollers, and other painting tools in warm soapy water immediately after use. Spray equipment should be given a final rinse with mineral spirits to prevent rusting.

USE COMPLETELY OR DISPOSE OF PROPERLY. Dry, empty containers may be recycled in a can recycling program. **Local disposal requirements vary; consult your sanitation department or state-designated environmental agency on disposal options.**

Environmental, Health & Safety Information

Use only with adequate ventilation. Do not breathe spray mist or sanding dust. Avoid contact with eyes and prolonged or repeated contact with skin. Wear eye protection and gloves during application or sanding. A dust/particulate respirator approved by NIOSH should be worn when sanding or spraying. Close container after each use.

FIRST AID: If you experience difficulty in breathing, leave the area to obtain fresh air.

IN CASE OF SPILL — Absorb with inert material and dispose of as specified under **Thinning/Cleanup.**

KEEP OUT OF REACH OF CHILDREN

PROTECT FROM FREEZING

Material Safety Data Sheets available on request from your servicing retailer.

Printed on Recycled Paper

Benjamin Moore & Co., 51 Chestnut Ridge Road, Montvale, NJ 07645 Tel: (201) 573-9600 Fax: (201) 573-9046 www.benjaminmoore.com **M72 21900 10/05**

ECO SPEC® *Interior Latex Primer Sealer 231*

Features

- Low Odor
- Low VOCs
- Quick return to service
- 100% Acrylic
- Spatter-resistant
- Exhibits excellent holdout properties

General Description

A low odor, low VOC, 100% acrylic interior latex primer sealer with spatter resistant properties.

Ideally suited for commercial, facility management, and residential applications.

ECO SPEC® Interior Latex Primer Sealer (231) does not have the odor of conventional primers which contain ingredients known as Volatile Organic Compounds (VOCs).

Always use ECO SPEC® Interior Latex Primer Sealer (231) as a first coat when a low odor, VOC free primer/finish system is required.

Recommended For:

Priming and sealing new or previously painted drywall, composition board, wood, concrete, plaster, and other porous surfaces when a low odor, solvent free primer/finish system is desired.

Limitations:

- Do not paint when temperature of air and surface is below 50° F (10° C)

Product Information

Colors: —Standard:

231 00 White
(May be tinted with up to 2.0 fl. oz. of BENJAMIN MOORE® COLOR PREVIEW® colorants per gallons.)

—Tint Bases:

Not Available.

—Special Colors:

Contact your Benjamin Moore & Co. representative.

Certification:

Master Painters Institute MPI #149.
Formulated without lead, mercury, or chromates.
Formulated with non-photochemically reactive solvents.
This product has been GREENGUARD Indoor Air Quality Certified® by the GREENGUARD Environmental Institute under GREENGUARD Standard for Low Emitting Products.
This product meets Green Seal Environmental standards for organic compounds (VOCs) and other ingredients.

Technical Assistance

Available through your local authorized independent BENJAMIN MOORE® retailer.
For the location of the retailer nearest you, call 1-800-826-2623, see www.benjaminmoore.com, or consult your local Yellow Pages.

Technical Data		*White*
Vehicle Type		100% Acrylic Latex
Pigment Type		Titanium Dioxide
Volume Solids		30%
Theoretical Coverage At Recommended Film Thickness		500-600 Sq. Ft.
Recommended Film Thickness	– Wet	2.9 Mils
	– Dry	1.0 Mils
Dry Time @ 77° F (25° C) @ 50% RH	— Dry To Touch	30 Minutes-1 Hour
	— To Recoat	1-2 Hours
	— To Hard Dry	1-2 Hours
Dries By		Evaporation, Coalescence
Viscosity		94 ± 3 KU
Flash Point (Seta)		None
60˚ Specular Gloss	– Flat	5.2 ± 5
Surface Temperature at application	– Min.	50˚ F
	– Max.	90˚ F
Thin With:		Clean Water
Clean Up Thinner		Clean Water
Weight Per Gallon		10.0 lbs.
Storage Temperature	– Min.	40˚ F
	– Max.	90˚ F

Volatile Organic Compounds (VOC)

**Unthinned	Grams/Liter	0

*** Contact Benjamin Moore & Co. for actual levels, which may or may not be substantially less than stated.*

TDS231C

Surface Preparation

Surfaces to be primed must be clean, dry, and free of wax, grease, dust, mildew, water soluble materials, and scaling paint. Glossy areas should be dulled. Apply ECO SPEC® Interior Latex Primer Sealer (231) before and after filling nail holes, cracks, and other surface imperfections. Sand when dry. New plaster or masonry surfaces must be cured 30 days before priming.

For best hiding results, tint ECO SPEC® Interior Latex Primer Sealer (231) to the approximate shade of the finish coat, especially when a significant color change is desired.

A primer is not required on previously painted surfaces in good condition and similar color.

Benjamin Moore & Co. offers a number of specialty primers for use over difficult substrates such as bleeding woods, grease, crayon markings, hard glossy surfaces, galvanized metal, or other substrates where paint adhesion or stain suppression is a particular problem. Your BENJAMIN MOORE® retailer can recommend the right problem-solving primer for your special needs.

WARNING! If you scrape, sand or remove old paint, you may release lead dust. **LEAD IS TOXIC. EXPOSURE TO LEAD DUST CAN CAUSE SERIOUS ILLNESS, SUCH AS BRAIN DAMAGE, ESPECIALLY IN CHILDREN. PREGNANT WOMEN SHOULD ALSO AVOID EXPOSURE.** Wear a NIOSH-approved respirator to control lead exposure. Carefully clean up with a HEPA vacuum and a wet mop. Before you start, find out how to protect yourself and your family by contacting the National Lead Information Hotline at 1-800-424-LEAD or log on to www.epa.gov/lead.

Application

Stir thoroughly before use. Apply one or two coats. For best results, use a BENJAMIN MOORE® custom-blended nylon/polyester brush, BENJAMIN MOORE® roller, or a similar product. This product can also be sprayed. Apply generously, using short overlapping strokes, brushing or rolling from unpainted areas into painted areas. Avoid excessive brushing and rolling. Let dry before touching up any missed spots. Do not apply when air or surface temperatures are below 50° F (10° C).

Spray, Airless: Fluid Pressure — 1,500 to 3,000 PSI;
Tip — .018 Orifice; Filter — 50 mesh.

Spray, Conventional: See **Thinning/Cleanup.**

Thinning/Cleanup

Thinning is unnecessary, but if required to obtain desired application properties, a small amount of clean water may be added. Never add other paints or solvents. Wash brushes, rollers, and other painting tools in warm soapy water immediately after use. Spray equipment should be given a final rinse with mineral spirits to prevent rusting.

USE COMPLETELY OR DISPOSE OF PROPERLY. Dry, empty containers may be recycled in a can recycling program. **Local disposal requirements vary; consult your sanitation department or state-designated environmental agency on disposal options.**

Environmental, Health & Safety Information

Use only with adequate ventilation. Do not breathe spray mist or sanding dust. Avoid contact with eyes and prolonged or repeated contact with skin. Wear eye protection and gloves during application or sanding. A dust/particulate respirator approved by NIOSH should be worn when sanding or spraying. Close container after each use.

FIRST AID: If you experience difficulty in breathing, leave the area to obtain fresh air.

IN CASE OF SPILL — Absorb with inert material and dispose of as specified under **Thinning/Cleanup**

KEEP OUT OF REACH OF CHILDREN

PROTECT FROM FREEZING

Material Safety Data Sheets available on request from your servicing retailer.

Printed on Recycled Paper

Benjamin Moore & Co., 51 Chestnut Ridge Road, Montvale, NJ 07645 Tel: (201) 573-9600 Fax: (201) 573-9046 www.benjaminmoore.com **M72 23100 10/05**

ECO SPEC®
Interior Latex Semi-Gloss Enamel 224

Features

- Low Odor
- Low VOCs
- Quick return to service
- 100% Acrylic
- Provides a durable, washable film
- Spatter-resistant

General Description

A low odor, low VOC, 100% acrylic latex semi-gloss enamel with spatter resistant properties. ECO SPEC® Interior Latex Semi-Gloss Enamel (224) provides a high hiding, washable semi-gloss finish.

ECO SPEC® Interior Latex Semi-Gloss Enamel (224) is ideally suited for commercial, facility management, and residential applications.

ECO SPEC® Interior Latex Semi-Gloss Enamel (224) does not have the odor of conventional paints that contain ingredients known as Volatile Organic Compounds (VOCs).

Recommended For:

- For new or previously painted interior plaster and masonry, wallboard, and primed or previously painted wood and metal
- Provides a beautiful semi-gloss finish for trim, doors, cabinets, walls, and ceilings

Limitations:

- Do not apply when air and surface temperatures are below 50° F (10° C)

Product Information

Colors: —Standard:

224 01 Pure White
(May be tinted with up to 2.0 fl. oz. of BENJAMIN MOORE® COLOR PREVIEW® colorants per gallon.)

—Tint Bases:

BENJAMIN MOORE® COLOR PREVIEW® Bases 1B & 2B.

—Special Colors:

Contact your Benjamin Moore & Co. representative.

Certification:

Master Painters Institute MPI #147.
Formulated without lead or mercury.
Formulated without Volatile Organic Compounds (VOCs) or solvents.
This product has been GREENGUARD Indoor Air Quality Certified® by the GREENGUARD Environmental Institute under GREENGUARD Standard for Low Emitting Products.
This product meets Green Seal Environmental standards for organic compounds (VOCs) and other ingredients.

Technical Assistance

Available through your local authorized independent BENJAMIN MOORE® retailer.
For the location of the retailer nearest you, call 1-800-826-2623, see www.benjaminmoore.com, or consult your local Yellow Pages.

Technical Data		*White*
Vehicle Type		100% Acrylic Latex
Pigment Type◊		Titanium Dioxide
Volume Solids◊		36%
Theoretical Coverage At Recommended Film Thickness		400-450 Sq. Ft.
Recommended Film Thickness	– Wet	3.8 Mils
	– Dry	1.4 Mils
Dry Time @ 77˚ F (25˚ C) @ 50% RH	— Dry To Touch	30 Minutes-1 Hour
	— To Recoat	1-2 Hours
	— To Hard Dry	24 Hours
Dries By		Coalescence
Viscosity◊		93 ± 3 KU
Flash Point (Seta)		None
60˚ Specular Gloss	– Semi-Gloss	40+
Surface Temperature at application	– Min.	50˚ F
	– Max.	90˚ F
Thin With:		Clean Water
Clean Up Thinner		Clean Water
Weight Per Gallon◊		10.2 lbs.
Storage Temperature	– Min.	40˚ F
	– Max.	90˚ F

Volatile Organic Compounds (VOC)

**Unthinned	Grams/Liter	11

*** Contact Benjamin Moore & Co. for actual levels, which may or may not be substantially less than stated.*
◊ Values given are for color shown; other colors may vary.

TDS224E

Surface Preparation

Surfaces to be primed must be clean, dry, and free of wax, grease, dust, mildew, water soluble materials, and scaling paint. Glossy areas should be dulled. Apply ECO SPEC® Interior Latex Primer Sealer (231) before and after filling nail holes, cracks, and other surface imperfections. Sand when dry. New plaster or masonry surfaces must be cured before priming.

WARNING! If you scrape, sand or remove old paint, you may release lead dust. **LEAD IS TOXIC. EXPOSURE TO LEAD DUST CAN CAUSE SERIOUS ILLNESS, SUCH AS BRAIN DAMAGE, ESPECIALLY IN CHILDREN. PREGNANT WOMEN SHOULD ALSO AVOID EXPOSURE.** Wear a NIOSH-approved respirator to control lead exposure. Carefully clean up with a HEPA vacuum and a wet mop. Before you start, find out how to protect yourself and your family by contacting the National Lead Information Hotline at 1-800-424-LEAD or log on to www.epa.gov/lead.

Primer/Finish Systems

For best hiding results, tint the primer to the approximate shade of the finish coat, especially when a significant color change is desired.

A primer is not required on previously painted surfaces in good condition and similar color.

Benjamin Moore & Co. offers a number of specialty primers for use over difficult substrates such as bleeding woods, grease, crayon markings, hard glossy surfaces, galvanized metal, or other substrates where paint adhesion or stain suppression is a particular problem. Your BENJAMIN MOORE® retailer can recommend the right problem-solving primer for your special needs.

Wood, New:
Primer: ECO SPEC® Interior Latex Primer Sealer (231)
Finish: 1 or 2 coats ECO SPEC® Interior Latex Semi-Gloss Enamel (224)

Wood, Repaint:
Primer: ECO SPEC® Interior Latex Primer Sealer (231)
Finish: 1 or 2 coats ECO SPEC® Interior Latex Semi-Gloss Enamel (224)

Plaster/Drywall, New: All plaster surfaces must be thoroughly cured. Drywall surfaces must be free of sanding dust.
Primer: ECO SPEC® Interior Latex Primer Sealer (231)
Finish: 1 or 2 coats ECO SPEC® Interior Latex Semi-Gloss Enamel (224)

Plaster/Drywall, Repaint: Remove any peeling or scaling paint and sand these areas to feather edges smooth with adjacent surfaces. Greasy walls and ceilings must be washed with a strong detergent solution.
Primer: Spot prime as needed with ECO SPEC® Interior Latex Primer Sealer (231)
Finish: 1 or 2 coats ECO SPEC® Interior Latex Semi-Gloss Enamel (224)

Masonry, New:
Rough Masonry:
Primer: ECO SPEC® Interior Latex Primer Sealer (231)
Finish: 1 or 2 coats ECO SPEC® Interior Latex Semi-Gloss Enamel (224)
Smooth Poured or Precast Concrete:
Primer: ECO SPEC® Interior Latex Primer Sealer (231)
Finish: 1 or 2 coats ECO SPEC® Interior Latex Semi-Gloss Enamel (224)

Masonry, Repaint: Remove all peeling and scaling paint by scraping or use of power equipment. All surfaces must be free from greasy or oily deposits. Glossy surfaces must be dulled.
Primer: Spot prime as needed with ECO SPEC® Interior Latex Primer Sealer (231)
Finish: 1 or 2 coats ECO SPEC® Interior Latex Semi-Gloss Enamel (224)

Ferrous Metal, New: All ferrous metal surfaces must be wiped with mineral spirits to remove oily, greasy residue. Solvent and rags should be changed frequently. When shop coat is abraded and rust has developed, remove by sanding or wirebrushing to a sound surface.
Primer: IRONCLAD® Latex Low Lustre Metal and Wood Enamel (363) or MOORCRAFT SUPER SPEC® D.T.M. Alkyd Low Lustre Enamel (Z163)
Finish: 1 or 2 coats ECO SPEC® Interior Latex Semi-Gloss Enamel (224)

Ferrous Metal, Repaint: All surfaces must be free of grease and oil, and cleaned in accordance with SSPC-SP1 "Solvent Cleaning," followed by removal of all loose, scaling paint by hand scraping, or by use of power tools. Rusted surfaces to be cleaned in accordance with SSPC-SP2 "Hand Tool Cleaning" or SSPC-SP3 "Power Tool Cleaning." Glossy surfaces should be dulled. Where heavy rust, corrosion and deteriorated coatings exist, the surface should be abrasive blast cleaned in accordance with SSPC-SP6 "Commercial Blast Cleaning." The surface should be blown off with compressed air to remove traces of blast products, and must be primed within 24 hours.
Primer: IRONCLAD® Latex Low Lustre Metal and Wood Enamel (363) or MOORCRAFT SUPER SPEC® D.T.M. Alkyd Low Lustre Enamel (Z163)
Finish: 1 or 2 coats ECO SPEC® Interior Latex Semi-Gloss Enamel (224)

Galvanized Metal, New: All new galvanized metal surfaces must be thoroughly cleaned with mineral spirits.
Primer: IRONCLAD® Latex Low Lustre Metal and Wood Enamel (363)
Finish: 1 or 2 coats ECO SPEC® Interior Latex Semi-Gloss Enamel (224)

Galvanized Metal, Repaint: All surfaces must be free of grease, oils and industrial contaminants, cleaned in accordance with SSPC-SP1 "Solvent Cleaning." Peeling or scaling paint must be removed by scraping, shading, or wirebrushing. Rusty surfaces must be wirebrushed and sanded free of rust and spot primed.
Primer: IRONCLAD® Latex Low Lustre Metal and Wood Enamel (363)
Finish: 1 or 2 coats ECO SPEC® Interior Latex Semi-Gloss Enamel (224)

Application

Stir thoroughly before use. Apply one or two coats. For best results, use a BENJAMIN MOORE® Professional custom-blended nylon/polyester brush, BENJAMIN MOORE® Professional roller, or a similar product. This product can also be sprayed. Apply by brush, roller, or spray. Apply generously, using short overlapping strokes, brushing or rolling from unpainted areas into painted areas. Avoid excessive brushing and rolling. Let paint dry before touching up any missed spots. Do not apply when air or surface temperatures are below 50° F (10° C).

Spray, Airless: Fluid Pressure — 1,500 to 3,000 PSI;
Tip — .018 Orifice; Filter — 50 mesh.

Spray, Conventional: See **Thinning/Cleanup**

Thinning/Cleanup

Thinning is unnecessary, but if required to obtain desired application properties, a small amount of clean water may be added. Never add other paints or solvents. Wash brushes, rollers, and other painting tools in warm soapy water immediately after use. Spray equipment should be given a final rinse with mineral spirits to prevent rusting.

USE COMPLETELY OR DISPOSE OF PROPERLY. Dry, empty containers may be recycled in a can recycling program. **Local disposal requirements vary; consult your sanitation department or state-designated environmental agency on disposal options.**

Environmental, Health & Safety Information

Use only with adequate ventilation. Do not breathe spray mist or sanding dust. Avoid contact with eyes and prolonged or repeated contact with skin. Wear eye protection and gloves during application or sanding. A dust/particulate respirator approved by NIOSH should be worn when sanding or spraying. Close container after each use.

FIRST AID: If you experience difficulty in breathing, leave the area to obtain fresh air.

IN CASE OF SPILL — Absorb with inert material and dispose of as specified under **Thinning/Cleanup.**

KEEP OUT OF REACH OF CHILDREN

PROTECT FROM FREEZING

Material Safety Data Sheets available on request from your servicing retailer.

Printed on Recycled Paper

Benjamin Moore & Co., 51 Chestnut Ridge Road, Montvale, NJ 07645 Tel: (201) 573-9600 Fax: (201) 573-9046 www.benjaminmoore.com **M72 22400 10/05**

M A T E R I A L S A F E T Y D A T A S H E E T Rev. 04B

For Coating, Resins, and Related Materials NPCA 1-84

Manufacturer's Name — Emergency Telephone No.

BENJAMIN MOORE & CO. — 800-424-9300 (CHEMTREC)

51 CHESTNUT RIDGE RD

MONTVALE, NJ 07645

Date Prepared	Last Rev Date	Information Telephone No.
05-08-06	07-19-05	201-573-9600

For the most up-to-date MSDS information please visit our website www.benjaminmoore.com/msds/go.html

SECTION I - PRODUCT ID

PRODUCT*: 219, n219

CLASS: WATER THINNED PAINT

NAME: ECO SPEC INTERIOR LATEX FLAT

COLOR: ALL

** HMIS CODE **

HEALTH: 1

FLAMMABILITY: 0

REACTIVITY: 0

PERSONAL PROT:

** SARA TITLE 312 **

ACUTE: N CHRONIC: N FIRE: N PRESSURE: N REACTIVITY: N

For a complete description of HMIS and an explanation of the PERSONAL PROT: code, see Section XX.

*NOTE: In the PRODUCT code a little n can be any capital letter of the alphabet except P or Q.

SECTION II HAZARDOUS INGREDIENTS

INGREDIENT	HAZ	SARA	MAX %	CAS #	TLV	PEL	STEL	CEIL	MM Hg
Titanium Dioxide	Y	N	25.0	013463-67-7	10 mg/M3	15 mg/M3	N/E	N/E	N/A
Silica, Amorphous	Y	N	5.0	007631-86-9	10 MG/M3	N/E	N/E	N/E	N/A
Calcium Carbonate	Y	N	15.0	000471-34-1	10 mg/M3	5 mg/M3	N/E	N/E	N/A
Diatomaceous Earth	Y	N	5.0	061790-53-2	10 mg/M3	5 mg/M3	N/E	N/E	N/A

NOTE: This product contains no reported or suspected carcinogens.

Note: This product contains pigments which may become a dust nuisance when removed by abrasive blasting, sanding, or grinding.

This product may contain small amounts of materials known to the State of California to cause cancer and reproductive harm.

SECTION III PHYSICAL DATA

BOILING RANGE: N/A WT/GALLON: 9.4 to 11.1 %VOL BY VOLUME: 63.1 to 77.2

EVAPORATION RATE: SLOWER THAN ETHER VAPOR DENSITY: HEAVIER THAN AIR

SECTION IV FIRE AND EXPLOSION HAZARD DATA

D.O.T. FLAMMABILITY CLASS.: NOT REGULATED FLASH POINT: > 250 F PMCC

LEL: Not Applicable

EXTINGUISHING MEDIA: FOAM CO2 DRY CHEMICAL WATER FOG
UNUSUAL FIRE AND EXPLOSION HAZARDS:
Toxic gases may form when product burns.
Closed containers may burst if exposed to extreme heat or fire.
SPECIAL FIRE FIGHTING PROCEDURES:
Cool exposed containers with water. Use self-contained breathing apparatus.

SECTION V HEALTH HAZARD DATA

EFFECTS OF OVEREXPOSURE - ACUTE:
Inhalation - Causes nose and throat irritation.
Inhalation - Causes lung irritation.
Skin and Eye Contact - Primary irritation.
Contact - Causes skin irritation.
Ingestion of large amounts could cause serious injury.
EFFECTS OF OVEREXPOSURE - CHRONIC:
Skin Contact - Prolonged or repeated exposure may cause dermatitis.
Chronic lung conditions may be aggravated by exposure to high dust levels.
MEDICAL CONDITIONS PRONE TO AGGRAVATION BY EXPOSURE:
None expected when used in accordance with Safe Handling and Use Information (Section VIII).
PRIMARY ROUTE(S) OF ENTRY: DERMAL INHALATION INGESTION
EMERGENCY AND FIRST AID PROCEDURES :
Inhalation - Remove to fresh air. Get medical help for any breathing difficulty.
Eye Contact - Flush thoroughly with water. Call physician.
Skin Contact - Wash with soap and water.
Ingestion - Drink 1 or 2 glasses of water to dilute.
DO NOT induce vomiting. Call physician.

SECTION VI REACTIVITY DATA

STABILITY: STABLE HAZARDOUS POLYMERIZATION WILL NOT OCCUR
CONDITIONS TO AVOID: Elevated temperatures
HAZARDOUS DECOMPOSITION PRODUCTS:
Burning may produce carbon dioxide and carbon monoxide.
INCOMPATABILITY (MATERIALS TO AVOID): None reasonably foreseeable.

SECTION VII SPILL OR LEAK PROCEDURES

STEPS TO BE TAKEN IN CASE MATERIAL IS RELEASED OR SPILLED:
Flush with water. Absorb with sawdust or rags.
WASTE DISPOSAL METHOD:
Conventional procedures in compliance with local, state and federal regulations. Do not incinerate sealed containers.

SECTION VIII SAFE HANDLING AND USE INFORMATION

RESPIRATORY PROTECTION:
Use NIOSH approved respirator specified for protection against paint spray mist and sanding dust in restricted or confined areas.
VENTILATION:
Adequate to maintain working atmosphere below T.L.V. and L.E.L. (See Sect. II for ingredient data and concentrations). Mechanical exhaust may be required in confined areas.
PROTECTIVE GLOVES: Waterproof during repeated contact.
EYE PROTECTION : Splash goggles or safety glasses with side shields.

OTHER PROTECTIVE EQUIPMENT: Clothing adequate to protect skin.
HYGIENIC PRACTICES:
Remove and wash clothing before reuse. Wash hands before eating, smoking or using the washroom.

SECTION IX SPECIAL PRECAUTIONS

PRECAUTIONS TO BE TAKEN IN HANDLING AND STORAGE:
Do not throw or drop containers.
OTHER PRECAUTIONS :
Avoid contact with eyes and prolonged contact with skin or breathing of spray mist or sanding dust.
Close container after each use. Keep out of reach of children. Do not take internally.

SECTION XX

HMIS (Hazardous Materials Identification System)(R) NPCA
HMIS is a recognized workplace Hazard Communications System as required by OSHA (29 CFR 1910.1200). Information on establishing a compliant hazardous communication program using HMIS is available from:

American Labelmark Co., Inc., Labelmaster Division
5724 N. Pulaski Rd., Chicago, IL 60646
1-800-621-5808

The ratings assigned by Benjamin Moore & Co. are only suggested ratings; the contractor/employer has ultimate responsibility for HMIS rating where this system is used.
PERSONAL PROTECTION: This code is left blank on Benjamin Moore & Co. MSDS's as it depends on application technique and the workplace ventilation. Please read Sections II through IX of this MSDS before deciding on appropriate protective equipment and beginning work. There are codes available for this section which can be obtained from Labelmaster.
Note: There are no SARA reportable materials in this product.

DISCLAIMER

The information contained herein is presented in good faith and believed to be accurate as of the effective date shown above. This information is furnished without warranty of any kind. Employers should use this information only as a supplement to other information gathered by them and must make independent determination of suitability and completeness of information from all sources to assure proper use of these materials and the safety and health of employees. Any use of this data and information must be determined by the user to be in accordance with applicable federal, state and local laws and regulations.
WARNING: If you scrape, sand, or remove old paint, you may release lead dust. LEAD IS TOXIC. EXPOSURE TO LEAD DUST CAN CAUSE SERIOUS ILLNESS, SUCH AS BRAIN DAMAGE, ESPECIALLY IN CHILDREN. PREGNANT WOMEN SHOULD ALSO AVOID EXPOSURE. Wear a NIOSH-approved respirator to control lead exposure. Clean up carefully with a HEPA vacuum and a wet mop. Before you start, find out how to protect yourself and your family by contacting the National Lead Information Hotline at 1-800-424-LEAD or log on to www.epa.gov/lead.

M A T E R I A L S A F E T Y D A T A S H E E T Rev. 03B

For Coating, Resins, and Related Materials NPCA 1-84

Manufacturer's Name Emergency Telephone No.

BENJAMIN MOORE & CO. 800-424-9300 (CHEMTREC)

51 CHESTNUT RIDGE RD

MONTVALE, NJ 07645

Date Prepared	Last Rev Date	Information Telephone No.
05-30-06	01-19-01	201-573-9600

For the most up-to-date MSDS information

please visit our website www.benjaminmoore.com/msds/go.html

SECTION I - PRODUCT ID

** HMIS CODE **

PRODUCT*: 231, n231 HEALTH: 1

CLASS: WATER THINNED PAINT FLAMMABILITY: 0

NAME: ECOSPEC INTERIOR LATEX PRIMER SEALER SEALER REACTIVITY: 0

COLOR: ALL PERSONAL PROT:

** SARA TITLE 312 **

ACUTE: N CHRONIC: N FIRE: N PRESSURE: N REACTIVITY: N

For a complete description of HMIS and an explanation of the PERSONAL PROT: code, see Section XX.

*NOTE: In the PRODUCT code a little n can be any capital letter of the alphabet except P or Q.

SECTION II HAZARDOUS INGREDIENTS

INGREDIENT	HAZ	SARA	MAX %	CAS #	TLV	PEL	STEL	CEIL	MM Hg
Titanium Dioxide	Y	N	15.0	013463-67-7	10 mg/M3	15 mg/M3	N/E	N/E	N/A
Hydrous Aluminum Silicates	Y	N	6.0	001332-58-7	2 Mg/M3	5 mg/M3	N/E	N/E	N/A

NOTE: This product contains no reported or suspected carcinogens

Note: This product contains pigments which may become a dust nuisance when removed by abrasive blasting, sanding, or grinding.

This product may contain small amounts of materials known to the State of California to cause cancer and reproductive harm.

SECTION III PHYSICAL DATA

BOILING RANGE: N/A WT/GALLON: 10.0 to 10.0 %VOL BY VOLUME: 71.7 to 71.7

EVAPORATION RATE: SLOWER THAN ETHER VAPOR DENSITY: HEAVIER THAN AIR

SECTION IV FIRE AND EXPLOSION HAZARD DATA

D.O.T. FLAMMABILITY CLASS.: NOT REGULATED FLASH POINT: > 250 F PMCC

LEL: Not Applicable

EXTINGUISHING MEDIA: FOAM CO2 DRY CHEMICAL WATER FOG

UNUSUAL FIRE AND EXPLOSION HAZARDS:

Toxic gases may form when product burns.

Closed containers may burst if exposed to extreme heat or fire.

SPECIAL FIRE FIGHTING PROCEDURES:

Cool exposed containers with water. Use self-contained breathing apparatus.

SECTION V HEALTH HAZARD DATA

EFFECTS OF OVEREXPOSURE - ACUTE:
Inhalation - Irritation of the respiratory tract.
Skin and Eye Contact - Primary irritation.
Ingestion of large amounts could cause serious injury.
EFFECTS OF OVEREXPOSURE - CHRONIC:
None Known
MEDICAL CONDITIONS PRONE TO AGGRAVATION BY EXPOSURE:
None expected when used in accordance with Safe Handling and Use Information (Section VIII).
PRIMARY ROUTE(S) OF ENTRY: DERMAL INHALATION INGESTION
EMERGENCY AND FIRST AID PROCEDURES :
Inhalation - Remove to fresh air. Get medical help for any breathing difficulty.
Eye Contact - Flush thoroughly with water. Call physician.
Skin Contact - Wash with soap and water.
Ingestion - Drink 1 or 2 glasses of water to dilute.
DO NOT induce vomiting. Call physician.

SECTION VI REACTIVITY DATA

STABILITY: STABLE HAZARDOUS POLYMERIZATION WILL NOT OCCUR
CONDITIONS TO AVOID: Elevated temperatures
HAZARDOUS DECOMPOSITION PRODUCTS:
Burning may produce carbon dioxide and carbon monoxide.
INCOMPATABILITY (MATERIALS TO AVOID): None reasonably foreseeable.

SECTION VII SPILL OR LEAK PROCEDURES

STEPS TO BE TAKEN IN CASE MATERIAL IS RELEASED OR SPILLED:
Flush with water. Absorb with sawdust or rags.
WASTE DISPOSAL METHOD:
Conventional procedures in compliance with local, state and federal regulations. Do not incinerate sealed containers.

SECTION VIII SAFE HANDLING AND USE INFORMATION

RESPIRATORY PROTECTION:
Use NIOSH approved respirator specified for protection against paint spray mist and sanding dust in restricted or confined areas.
VENTILATION:
Adequate to maintain working atmosphere below T.L.V. and L.E.L. (See Sect. II for ingredient data and concentrations). Mechanical exhaust may be required in confined areas.
PROTECTIVE GLOVES: Waterproof during repeated contact.
EYE PROTECTION : Splash goggles or safety glasses with side shields.
OTHER PROTECTIVE EQUIPMENT: Clothing adequate to protect skin.
HYGIENIC PRACTICES:
Remove and wash clothing before reuse. Wash hands before eating, smoking or using the washroom.

SECTION IX SPECIAL PRECAUTIONS

PRECAUTIONS TO BE TAKEN IN HANDLING AND STORAGE:
Do not throw or drop containers.

OTHER PRECAUTIONS :
Avoid contact with eyes and prolonged contact with skin or breathing of spray mist or sanding dust.
Close container after each use. Keep out of reach of children. Do not take internally.

SECTION XX

HMIS (Hazardous Materials Identification System)(R) NPCA

HMIS is a recognized workplace Hazard Communications System as required by OSHA (29 CFR 1910.1200). Information on establishing a compliant hazardous communication program using HMIS is available from:

American Labelmark Co., Inc., Labelmaster Division
5724 N. Pulaski Rd., Chicago, IL 60646
1-800-621-5808

The ratings assigned by Benjamin Moore & Co. are only suggested ratings; the contractor/employer has ultimate responsibility for HMIS rating where this system is used.
PERSONAL PROTECTION: This code is left blank on Benjamin Moore & Co. MSDS's as it depends on application technique and the workplace ventilation. Please read Sections II through IX of this MSDS before deciding on appropriate protective equipment and beginning work. There are codes available for this section which can be obtained from Labelmaster.
Note: There are no SARA reportable materials in this product.

DISCLAIMER

The information contained herein is presented in good faith and believed to be accurate as of the effective date shown above. This information is furnished without warranty of any kind. Employers should use this information only as a supplement to other information gathered by them and must make independent determination of suitability and completeness of information from all sources to assure proper use of these materials and the safety and health of employees. Any use of this data and information must be determined by the user to be in accordance with applicable federal, state and local laws and regulations.
WARNING: If you scrape, sand, or remove old paint, you may release lead dust. LEAD IS TOXIC. EXPOSURE TO LEAD DUST CAN CAUSE SERIOUS ILLNESS, SUCH AS BRAIN DAMAGE, ESPECIALLY IN CHILDREN. PREGNANT WOMEN SHOULD ALSO AVOID EXPOSURE. Wear a NIOSH-approved respirator to control lead exposure. Clean up carefully with a HEPA vacuum and a wet mop. Before you start, find out how to protect yourself and your family by contacting the National Lead Information Hotline at 1-800-424-LEAD or log on to www.epa.gov/lead.

M A T E R I A L S A F E T Y D A T A S H E E T Rev. 03B

For Coating, Resins, and Related Materials NPCA 1-84

Manufacturer's Name Emergency Telephone No.

BENJAMIN MOORE & CO. 800-424-9300 (CHEMTREC)

51 CHESTNUT RIDGE RD

MONTVALE, NJ 07645

Date Prepared	Last Rev Date	Information Telephone No.
04-28-06	01-19-01	201-573-9600

For the most up-to-date MSDS information

please visit our website www.benjaminmoore.com/msds/go.html

SECTION I - PRODUCT ID

** HMIS CODE **

PRODUCT*: 224, n224 HEALTH: 1

CLASS: WATER THINNED PAINT FLAMMABILITY: 0

NAME: ECO SPEC INTERIOR LATEX SEMI-GLOSS OSS ENAMELREACTIVITY: 0

COLOR: ALL PERSONAL PROT:

** SARA TITLE 312 **

ACUTE: N CHRONIC: N FIRE: N PRESSURE: N REACTIVITY: N

For a complete description of HMIS and an explanation of the PERSONAL PROT: code, see Section XX.

*NOTE: In the PRODUCT code a little n can be any capital letter of the alphabet except P or Q.

SECTION II HAZARDOUS INGREDIENTS

INGREDIENT	HAZ	SARA	MAX %	CAS #	TLV	PEL	STEL	CEIL	MM Hg
Titanium Dioxide	Y	N	30.0	013463-67-7	10 mg/M3	15 mg/M3	N/E	N/E	N/A
Silica, Amorphous	Y	N	5.0	007631-86-9	10 MG/M3	N/E	N/E	N/E	N/A
Hydrous Aluminum Silicates	Y	N	5.0	001332-58-7	2 Mg/M3	5 mg/M3	N/E	N/E	N/A

NOTE: This product contains no reported or suspected carcinogens

Note: This product contains pigments which may become a dust nuisance when removed by abrasive blasting, sanding, or grinding.

This product may contain small amounts of materials known to the State of California to cause cancer and reproductive harm.

SECTION III PHYSICAL DATA

BOILING RANGE: N/A WT/GALLON: 9.4 to 11.1 %VOL BY VOLUME: 60.0 to 68.2

EVAPORATION RATE: SLOWER THAN ETHER VAPOR DENSITY: HEAVIER THAN AIR

SECTION IV FIRE AND EXPLOSION HAZARD DATA

D.O.T. FLAMMABILITY CLASS.: NOT REGULATED FLASH POINT: > 250 F PMCC

LEL: Not Applicable

EXTINGUISHING MEDIA: FOAM CO_2 DRY CHEMICAL WATER FOG

UNUSUAL FIRE AND EXPLOSION HAZARDS:

Toxic gases may form when product burns.

Closed containers may burst if exposed to extreme heat or fire.
SPECIAL FIRE FIGHTING PROCEDURES:
Cool exposed containers with water. Use self-contained breathing apparatus.

SECTION V HEALTH HAZARD DATA

EFFECTS OF OVEREXPOSURE - ACUTE:
Inhalation - Irritation of the respiratory tract.
Skin and Eye Contact - Primary irritation.
Contact - Causes skin irritation.
Ingestion of large amounts could cause serious injury.
EFFECTS OF OVEREXPOSURE - CHRONIC:
Skin Contact - Prolonged or repeated exposure may cause dermatitis.
Chronic lung conditions may be aggravated by exposure to high dust levels.
MEDICAL CONDITIONS PRONE TO AGGRAVATION BY EXPOSURE:
None expected when used in accordance with Safe Handling and Use Information (Section VIII).
PRIMARY ROUTE(S) OF ENTRY: DERMAL INHALATION INGESTION
EMERGENCY AND FIRST AID PROCEDURES :
Inhalation - Remove to fresh air. Get medical help for any breathing difficulty.
Eye Contact - Flush thoroughly with water. Call physician.
Skin Contact - Wash with soap and water.
Ingestion - Drink 1 or 2 glasses of water to dilute.
DO NOT induce vomiting. Call physician.

SECTION VI REACTIVITY DATA

STABILITY: STABLE HAZARDOUS POLYMERIZATION WILL NOT OCCUR
CONDITIONS TO AVOID: Elevated temperatures
HAZARDOUS DECOMPOSITION PRODUCTS:
Burning may produce carbon dioxide and carbon monoxide.
INCOMPATABILITY (MATERIALS TO AVOID): None reasonably foreseeable.

SECTION VII SPILL OR LEAK PROCEDURES

STEPS TO BE TAKEN IN CASE MATERIAL IS RELEASED OR SPILLED:
Flush with water. Absorb with sawdust or rags.
WASTE DISPOSAL METHOD:
Conventional procedures in compliance with local, state and federal regulations. Do not incinerate sealed containers.

SECTION VIII SAFE HANDLING AND USE INFORMATION

RESPIRATORY PROTECTION:
Use NIOSH approved respirator specified for protection against paint spray mist and sanding dust in restricted or confined areas.
VENTILATION:
Adequate to maintain working atmosphere below T.L.V. and L.E.L. (See Sect. II for ingredient data and concentrations). Mechanical exhaust may be required in confined areas.
PROTECTIVE GLOVES: Waterproof during repeated contact.
EYE PROTECTION : Splash goggles or safety glasses with side shields.
OTHER PROTECTIVE EQUIPMENT: Clothing adequate to protect skin.
HYGIENIC PRACTICES:
Remove and wash clothing before reuse. Wash hands before eating, smoking or using the washroom.

SECTION IX SPECIAL PRECAUTIONS

PRECAUTIONS TO BE TAKEN IN HANDLING AND STORAGE:
Do not throw or drop containers.
OTHER PRECAUTIONS :
Avoid contact with eyes and prolonged contact with skin or breathing of spray mist or sanding dust.
Close container after each use. Keep out of reach of children. Do not take internally.

SECTION XX

HMIS (Hazardous Materials Identification System)(R) NPCA
HMIS is a recognized workplace Hazard Communications System as required by OSHA (29 CFR 1910.1200). Information on establishing a compliant hazardous communication program using HMIS is available from:

American Labelmark Co., Inc., Labelmaster Division
5724 N. Pulaski Rd., Chicago, IL 60646
1-800-621-5808

The ratings assigned by Benjamin Moore & Co. are only suggested ratings; the contractor/employer has ultimate responsibility for HMIS rating where this system is used.
PERSONAL PROTECTION: This code is left blank on Benjamin Moore & Co. MSDS's as it depends on application technique and the workplace ventilation. Please read Sections II through IX of this MSDS before deciding on appropriate protective equipment and beginning work. There are codes available for this section which can be obtained from Labelmaster.
Note: There are no SARA reportable materials in this product.

DISCLAIMER

The information contained herein is presented in good faith and believed to be accurate as of the effective date shown above. This information is furnished without warranty of any kind. Employers should use this information only as a supplement to other information gathered by them and must make independent determination of suitability and completeness of information from all sources to assure proper use of these materials and the safety and health of employees. Any use of this data and information must be determined by the user to be in accordance with applicable federal, state and local laws and regulations.
WARNING: If you scrape, sand, or remove old paint, you may release lead dust. LEAD IS TOXIC. EXPOSURE TO LEAD DUST CAN CAUSE SERIOUS ILLNESS, SUCH AS BRAIN DAMAGE, ESPECIALLY IN CHILDREN. PREGNANT WOMEN SHOULD ALSO AVOID EXPOSURE. Wear a NIOSH-approved respirator to control lead exposure. Clean up carefully with a HEPA vacuum and a wet mop. Before you start, find out how to protect yourself and your family by contacting the National Lead Information Hotline at 1-800-424-LEAD or log on to www.epa.gov/lead.

SPECIFICATION SECTION

DIVISION 10 - SPECIALTIES

Top Hung System

Junior 80/B – Hawa

- For 1 and 2 sliding wood doors
- Minimum installation height
- Outstanding durability
- Rattle-free bottom guide
- Suspension with carrier profile
- Smooth quiet operation
- Heights adjustable
- Door stop with adjustable retention spring
- Maximum door weight: **80 kg (176 lbs.)**
- Minimum door thickness: **35 mm (1⅜")**

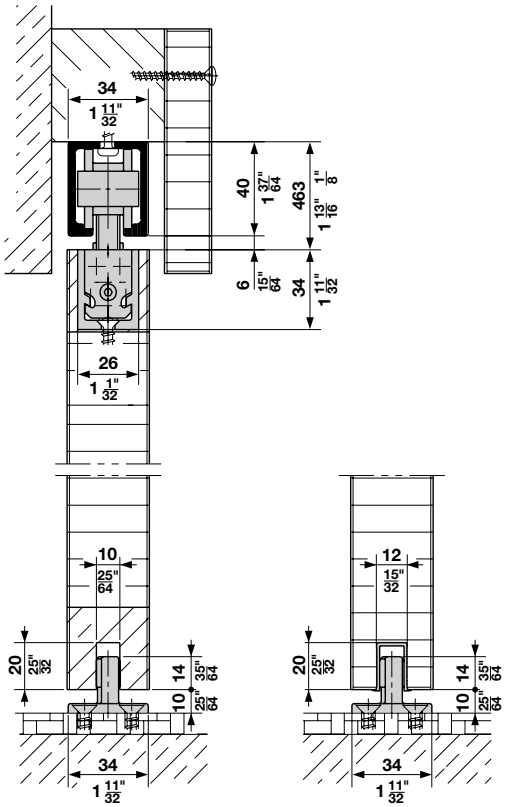

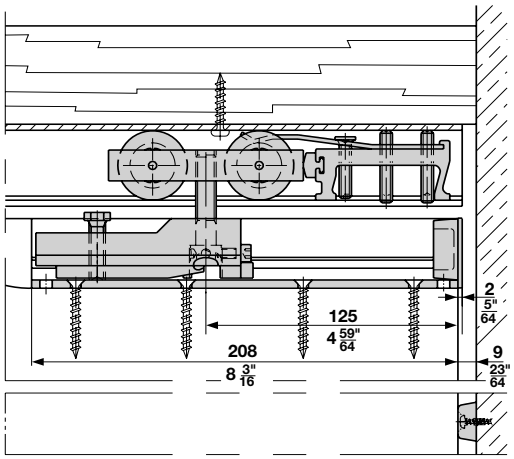

Dimensions in mm
Inches are approximate

Dimensional data not binding. We reserve the right to alter specifications without notice.

Top Hung System

Junior 80/B – Hawa

Fitting set for a single sliding door without upper track and lower guide channel

1 set				**940.80.002**
consisting of:	Description	Material/Color	Qty.	Item No.
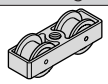	Double roller running gear		2 pcs.	940.80.012
	Carrier profile with suspension plates, M10 bolt and set screw		2 pcs.	940.80.024
	End caps for carrier profile	rubber, gray	2 pcs.	940.80.029
	Floor mounted guide, rattle-free	plastic, black	1 pc.	940.40.031
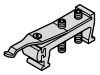	Track stopper with adjustable retention spring		1 pc.	940.80.041
	Wall buffer	rubber, black	1 pc.	940.40.051
	Locking wrench for suspension plate	steel, galvanized	1 pc.	940.80.092

Note:
- Item numbers are valid only for 1 piece, when ordering individual components, please state the desired amount
- Depending on application an additional track stopper has to be ordered with set
- For 2 bi-parting sliding doors please order 2 sets

Upper tracks, pre-drilled

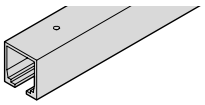

Material: aluminum, anodized

Length	clear
1.4 m (4' 7⅛")	940.80.140
1.6 m (5' 3")	940.80.160
1.8 m (5' 10⅞")	940.80.180
2.0 m (6' 6¾")	940.80.200
2.2 m (7' 2⅝")	940.80.220
2.5 m (8' 2 7/16")	940.80.250
3.0 m (9' 10⅛")	940.80.300
4.0 m (13' 1½")	940.80.400
6.0 m (19' 8¼")	940.80.600

Packing: 1 pc.

Accessories:
- Hawa mounting wedge (page **256**)
- Hawa Confort guides (page **251**)
- Hawa wall-mounted angle profile (page **249**)

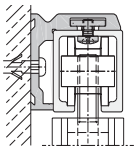

- Other lower guide options (page **258**)
- Hawa sound absorbing bracket (page **255**)

Supplementary parts:

Guide rail, glue-in type

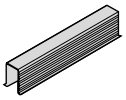

Material: plastic

Color	Item No.
black	940.41.130

Packing: 1 pc. (1.3 m (4' 3⅛")

Hawa mounting wedge, for doors running in the ceiling (2 pcs. per sliding door)

	Item No.
	940.80.050

Packing: 1 set

Cover cap, for upper track

Material: rubber

Color	Item No.
gray	940.80.020

Packing: 1 pc.

Installation plan: (included in fitting set), mounting instructions for planning and execution available upon request.

Dimensions in mm
Inches are approximate

Top Hung System

Junior 80/Inox – Hawa

Characteristics:
- For 1 and 2 sliding wood doors
- Smooth quiet operation
- Outstanding durability
- Rattle-free bottom guide
- Simple installation
- Stainless steel suspension plates and bolts
- Vertically and laterally adjustable
- Door stop with adjustable retention spring
- Improved corrosion resistance

Technical data:
- Maximum door weight: **80 kg (176 lbs.)**
- Minimum door thickness: **26 mm (1")**

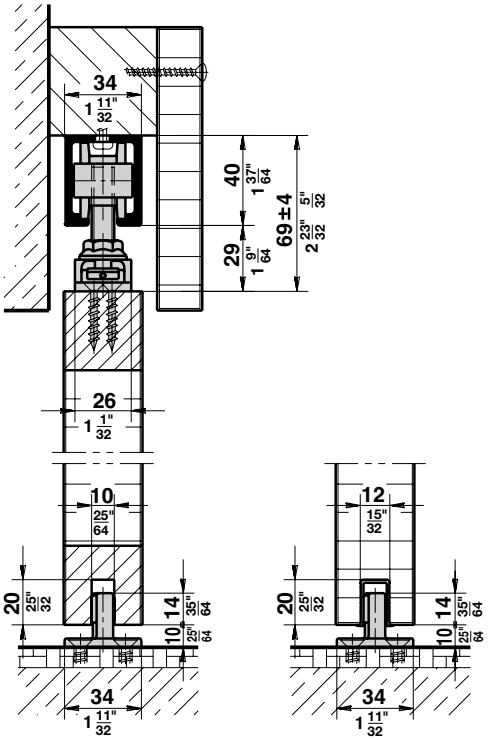

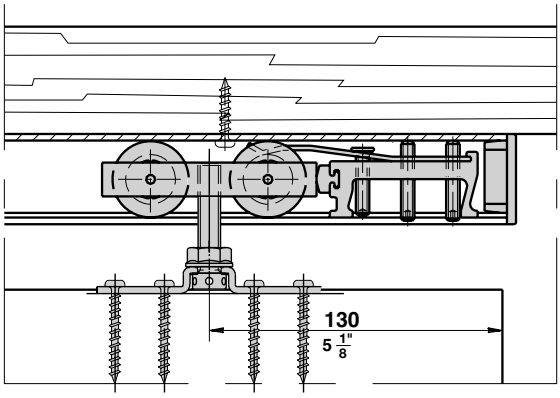

Dimensions in mm
Inches are approximate

Dimensional data not binding. We reserve the right to alter specifications without notice.

Top Hung System

Junior 80/Inox – Hawa

Fitting set for a single sliding door without upper track and bottom guide channel

1 set				**940.80.003**
consisting of:	Description	Material/Color	Qty.	Item No.
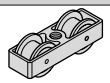	Double roller running gear, inox-type, nylon wheels		2 pc.	940.81.012
	One-way suspension plate, M10 bolt	stainless steel	2 pc.	940.81.026
	Floor mounted guide, rattle-free	black	1 pc.	940.40.031
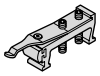	Track stopper with adjustable retention spring, inox-type nylon		1 pc.	940.80.042
	Rubber wall buffer	black	1 pc.	940.40.051

Note: • Item numbers are valid only for one piece, when ordering individual components, please state the desired amount
• For 2 bi-parting sliding doors please order 2 sets

Upper tracks, pre-drilled

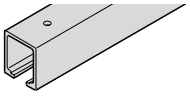

Material: aluminum, anodized

Length	clear
1.4 m (4' 7⅛")	940.80.140
1.6 m (5' 3")	940.80.160
1.8 m (5' 10⅞")	940.80.180
2.0 m (6' 6¾")	940.80.200
2.2 m (7' 2⅝")	940.80.220
2.5 m (8' 2 7/16")	940.80.250
3.0 m (9' 10⅛")	940.80.300
4.0 m (13' 1½")	940.80.400
6.0 m (19' 8¼")	940.80.600

Packing: 1 pc.

Guide rail

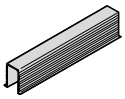

Material: plastic

Color	Item No.
black	940.41.130

Packing: 1 pc. (1.3 m (4' 3⅛")

Cover cap for upper track

Material: rubber

Color	Item No.
gray	940.80.020

Packing: 1 pc. (1.3 m (4' 3⅛")

Accessories:
- Hawa Confort guides (page **251**)
- Hawa wall-mounted angle profile (page **249**)

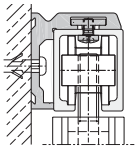

- Other lower guide options (page **258**)
- Hawa sound absorbing bracket (page **255**)

Dimensions in mm
Inches are approximate

Top Hung System

Telescopic 40/4 – Hawa

- For 4 sliding wood doors
- Smooth quiet operation
- Outstanding durability
- Rattle-free bottom guide
- Simultaneous opening and closing of 4 sliding doors
- Special two-way suspension
- Vertically and laterally adjustable
- Door stop with adjustable retention spring
- Maximum door weight per leaf: **40 kg (88 lbs.)**
- For door thickness: **40 - 47 mm (1 9/16" - 1 7/8")**
- For door width: **500 - 800 mm (19 11/16" - 31 1/2")**

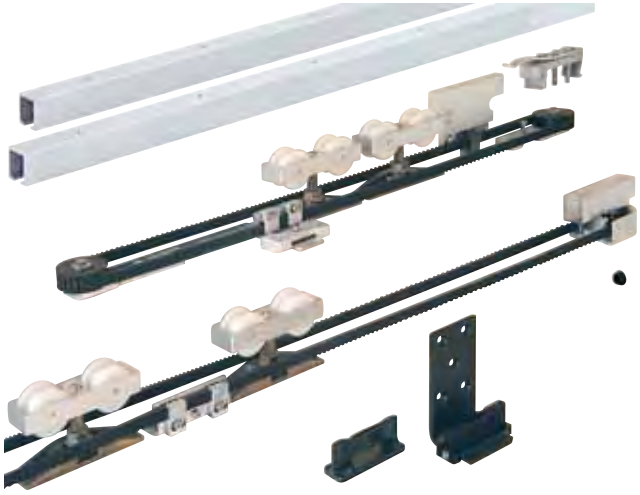

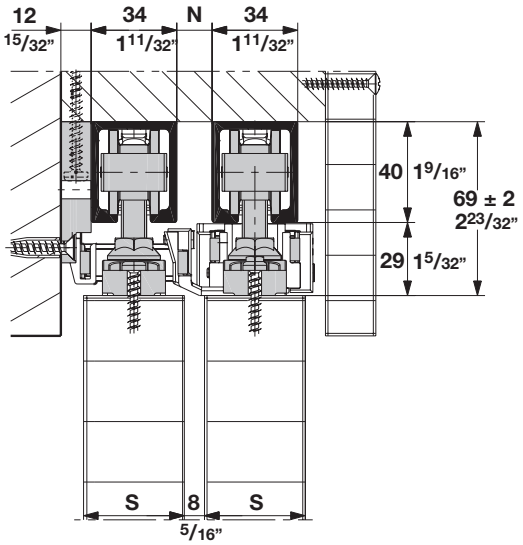

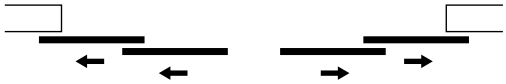

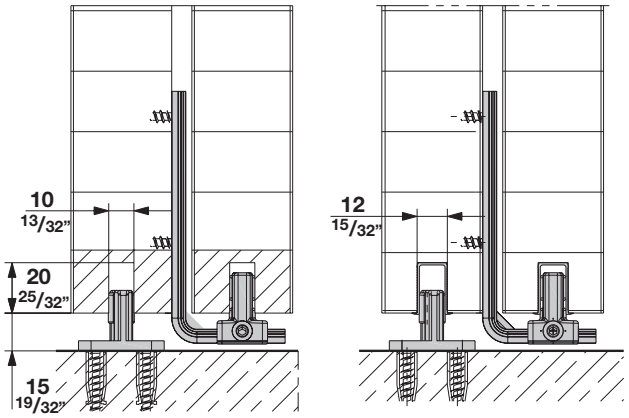

N = S - 26 mm (1 1/32")

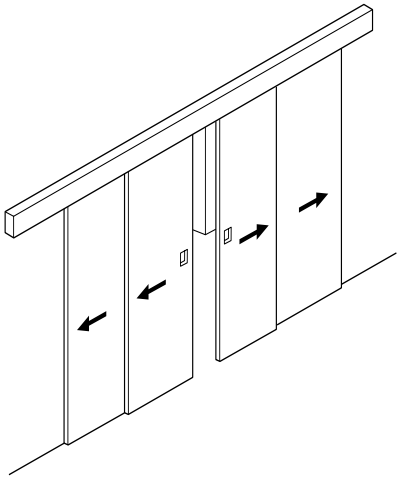

Upper track length (L) calculation
L = CO + (2 x DW)

Door width (DW) calculation

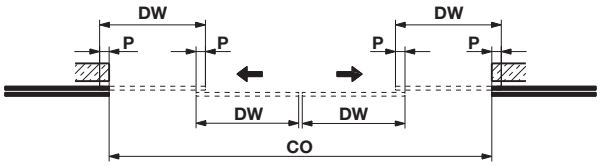

DW = Door width
CO = Clear opening
P = Overlap of doors

P = ≥ 75 mm (3")

4-panel: $DW = \frac{(4 \times P) + CO}{4}$

Dimensions in mm
Inches are approximate

Dimensional data not binding. We reserve the right to alter specifications without notice.

Top Hung System

Telescopic 40/4 – Hawa

Supplementary fitting set for four sliding doors

1 set				940.41.002
Consisting of:	Description	Color	Qty.	Item No.
	Driver, wide		2 pcs.	947.00.050
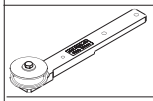	Guide pulley wheel, with mounting screws, long		2 pcs.	947.00.048
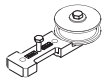	Guide pulley wheel, with mounting screws, short		2 pcs.	947.00.049
	Toothed belt mounting device for ceiling/wall mounting, complete		2 pcs.	947.00.053
	Toothed belt, 2.7 m (8' 10 5/16"), glass-fiber reinforced	black	2 pcs.	947.00.054
	Toothed belt, 10 m (32' 9 11/16"), glass-fiber reinforced	black	1 pc.	947.00.037
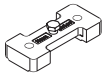	Driver counter-plate, wide		2 pcs.	947.00.051
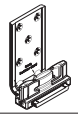	Floor guide HAWA Confort 120 – Telescopic		2 pcs.	940.40.070
	Deflection roller with end stops		2 pcs.	940.80.086
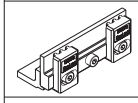	Clamping element for fastening ends of toothed belt		1 pc.	947.00.055
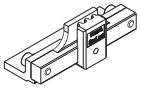	Clamping element for fastening continuous toothed belt		1 pc.	947.00.056

Note: In addition, 4 sets of Hawa Junior 80/Z have to be ordered with each Hawa Telescopic 40/4 fitting set

Description	Item No.
Hawa Junior 80/Z	940.80.001

Packing: 1 set

Upper tracks, pre-drilled

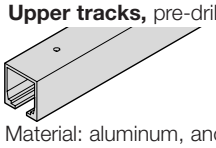

Material: aluminum, anodized

Length	clear
1.4 m (4' 7⅛")	940.80.140
1.6 m (5' 3")	940.80.160
1.8 m (5' 10⅞")	940.80.180
2.0 m (6' 6¾")	940.80.200
2.2 m (7' 2⅝")	940.80.220
2.5 m (8' 2 7/16")	940.80.250
3.0 m (9' 10⅛")	940.80.300
4.0 m (13' 1½")	940.80.400
6.0 m (19' 8¼")	940.80.600

Packing: 1 pc.

Guide rail

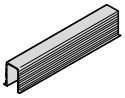

Material: plastic

Color	Item No.
black	940.41.130

Packing: 1 pc. (1.3 m (4' 3⅛")

Installation plan: (included in fitting set), mounting instructions for planning and execution available upon request.

Order specifications:
- Qty. of Telescopic 40/4 fitting sets
- Qty. of Jr. 80/Z sets
- Length of upper track

Accessories:
Hawa Confort guides (page **251**)

Dimensions in mm
Inches are approximate

Top Hung System

Telescopic 80/2 and 80/3 – Hawa

- For 2 or 3 bypassing sliding wood doors
- Smooth quiet operation
- Outstanding durability
- Rattle-free bottom guide
- Parallel opening and closing of 2 or 3 sliding doors
- Special two-way suspension
- Vertically and laterally adjustable
- Door stop with adjustable retention spring
- Maximum door weight per leaf: **80 kg (176 lbs.)**
- For door thickness: 80/2: **32 - 47 mm (1¼" - 1⅞")**
  80/3: **40 - 47 mm (1 9/16" - 1⅞")**
- For door width: **500 - 1200 mm (19 11/16" - 47¼")**

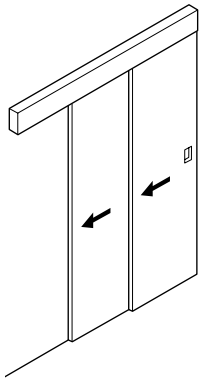

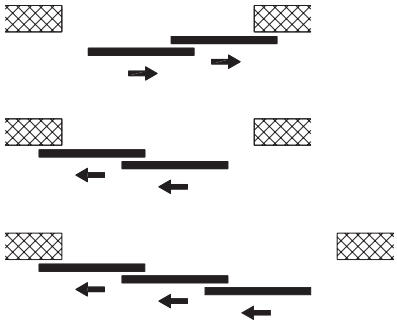

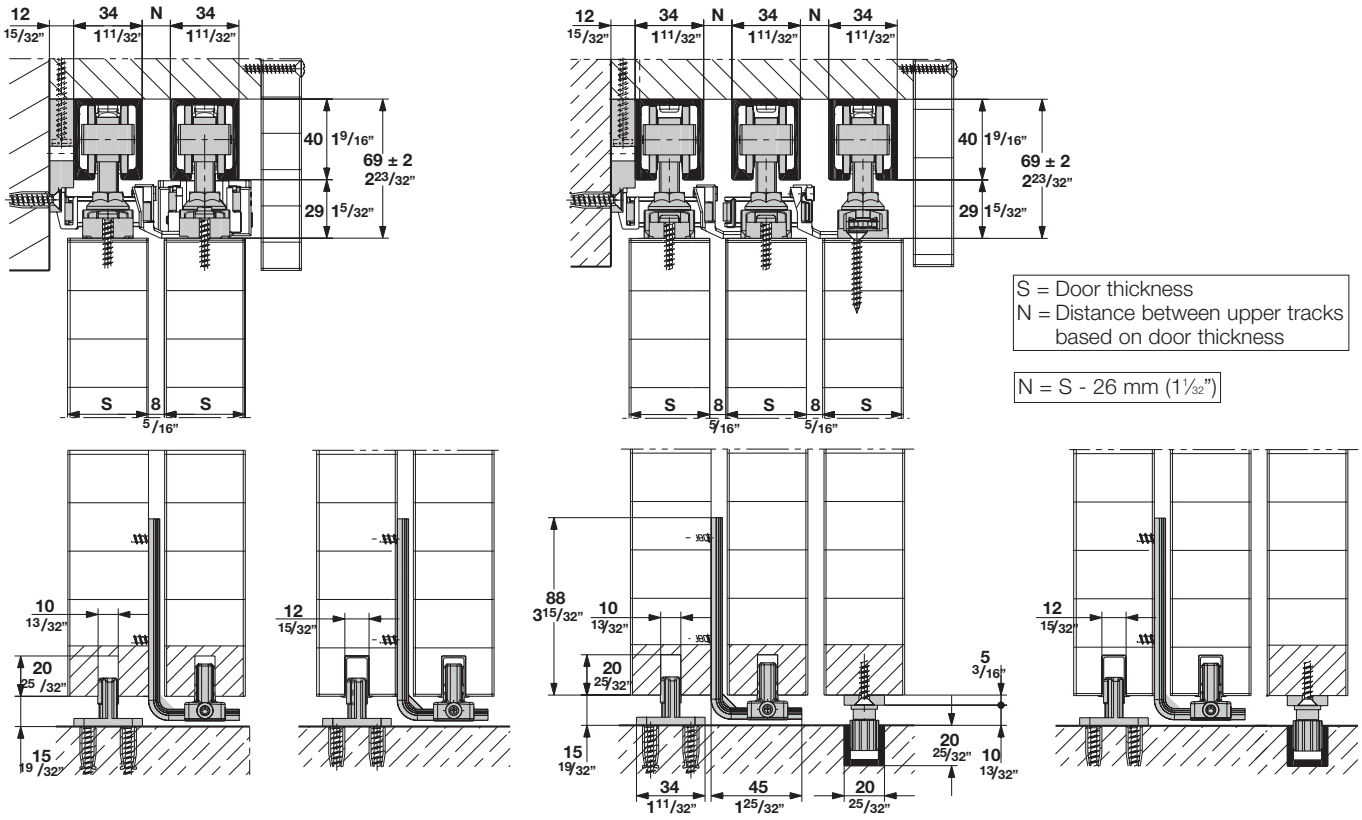

S = Door thickness
N = Distance between upper tracks based on door thickness

N = S - 26 mm (1 1/32")

Dimensional data not binding. We reserve the right to alter specifications without notice.

Dimensions in mm
Inches are approximate

Top Hung System

Telescopic 80/2 and 80/3 – Hawa

Supplementary fitting set for four sliding doors

1 set			940.81.007	940.81.008	
Consisting of:	Description	Color	Qty.	Qty.	Item No.
	Driver, wide		1 pc.	2 pcs.	947.00.050
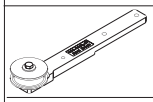	Guide pulley wheel, with mounting screws, long		1 pc.	2 pcs.	947.00.048
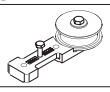	Guide pulley wheel, with mounting screws, short		1 pc.	2 pcs.	947.00.049
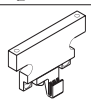	Toothed belt mounting device for ceiling/wall mounting, complete		1 pc.	1 pc.	947.00.053
	Toothed belt, 2.7 m (8' 10 5/16"), glass-fiber reinforced	black	1 pc.	2 pcs.	947.00.054
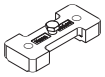	Driver counter-plate, wide		1 pc.	1 pc.	947.00.051
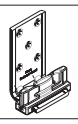	Floor guide HAWA Confort 120 – Telescopic		1 pc.	1 pc.	940.40.070
	Lower guide, steel plate with plastic slider		-	1 pc.	943.04.030
	Driver, narrow		-	1 pc.	947.00.052

Note: In addition, the following HAWA Junior 80/Z fitting sets have to be ordered separately: **Telescopic 80/2:** 2 sets; **Telescopic 80/3:** 3 sets

Description	Item No.
Hawa Junior 80/Z	940.80.001

Packing: 1 pc.

Upper tracks, pre-drilled

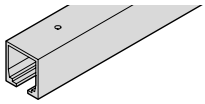

Material: aluminum, anodized

Length	clear
1.4 m (4' 7⅛")	940.80.140
1.6 m (5' 3")	940.80.160
1.8 m (5' 10⅞")	940.80.180
2.0 m (6' 6¾")	940.80.200
2.2 m (7' 2⅝")	940.80.220
2.5 m (8' 2 7/16")	940.80.250
3.0 m (9' 10⅛")	940.80.300
4.0 m (13' 1½")	940.80.400
6.0 m (19' 8¼")	940.80.600

Packing: 1 pc.

Installation plan:
(included in fitting set), mounting instructions for planning and execution available upon request.

Guide rail

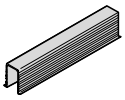

Material: plastic

Color	Item No.
black	940.41.130

Packing: 1 pc. (1.3 m (4' 3 1/8")

Order specifications:
- Qty. and type of Telescopic fitting sets
- Qty. of Jr. 80/Z sets
- Length of upper track

Accessories:
- Hawa Confort guides (page **251**)

Upper track length calculation:
80/2 L = CO + DW
80/3 L = CO + DW

DW = Door width
CO = Clear opening
P = Overlap

Door width (DW) calculation

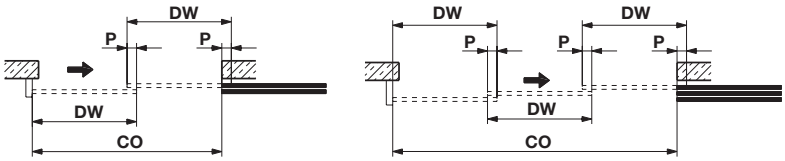

2-panel: $DW = \frac{(2 \times P) + CO}{2}$

3-panel: $DW = \frac{(3 \times P) + CO}{3}$

Dimensions in mm
Inches are approximate

Dimensional data not binding. We reserve the right to alter specifications without notice.

Top Hung System

Symmetric 80/Z – Hawa

- For bi-parting sliding wood doors
- Smooth quiet operation
- Outstanding durability
- Rattle-free bottom guide
- Simultaneous opening and closing of bi-parting sliding doors
- Special two-way suspension
- Vertically and laterally adjustable
- Door stop with adjustable retention spring
- Maximum door weight per leaf: **80 kg (176 lbs.)**
- Minimum door thickness: **26 mm (1")**

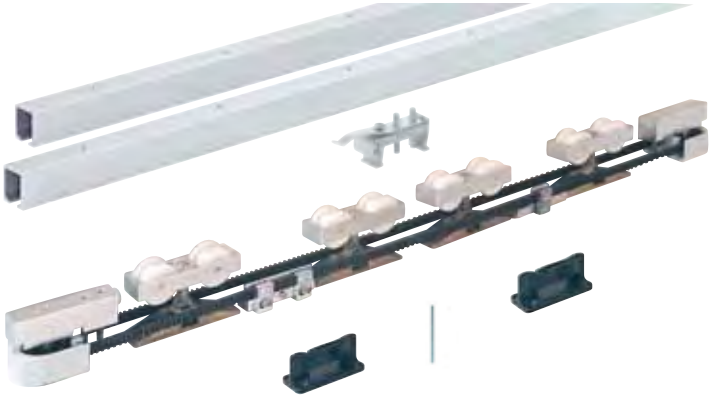

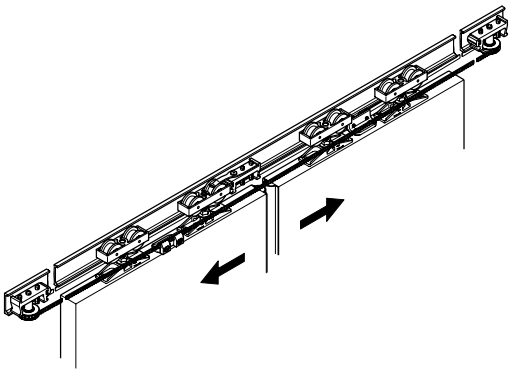

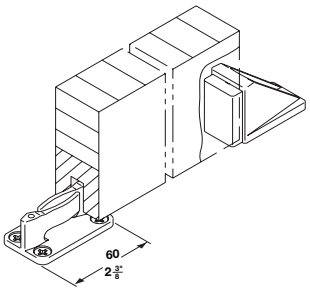

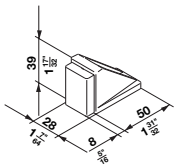

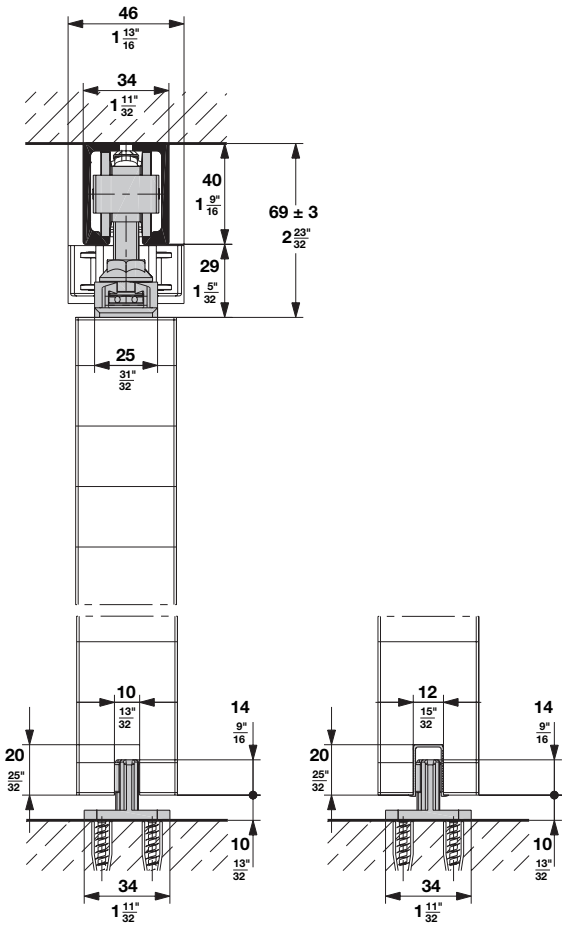

The two-way suspension bracket allows the door leaf to be hung and to be taken off in two different ways:

1. From the side:
Fixed pocket cover doesn't have to be removed.
Cover plate above opening has to be removable.

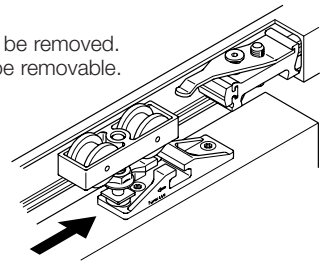

2. From the front:

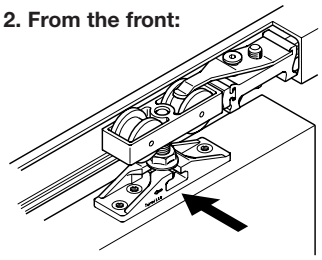

Dimensions in mm
Inches are approximate

Dimensional data not binding. We reserve the right to alter specifications without notice.

Top Hung System

Symmetric 80/Z – Hawa

Fitting set for bi-parting sliding doors without upper track and lower guide channel

1 set				**940.81.009**
Consisting of:	Description	Material/Color	Qty.	Item No.
	Double roller running gear		4 pcs.	940.80.012
	Two-way suspension plate, M10 bolt and mounting screws		4 pcs.	940.80.022
	Floor mounted guide, rattle-free	black	2 pcs.	940.40.031
	Track stopper with adjustable retention spring		1 pc.	940.80.041
	Height adjusting pin	steel	1 pc.	940.40.091
	Deflection roller with end stops		2 pcs.	940.80.086
	Clamping element for fastening ends of the toothed belt		1 pc.	947.00.055
	Clamping element for fastening continuous toothed belt		1 pc.	947.00.056
	Toothed belt, glass-fiber reinforced 10 m (32' 9 11/16")	black	1 pc.	947.00.037

Note:
- Item numbers are valid only for 1 piece, when ordering individual components, please state the desired amount
- The toothed belt (length 10 m) is calculated for 2 sliding doors having a maximum width of 1200 mm (3' 11¼") each

Upper tracks, pre-drilled

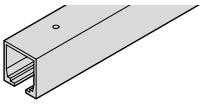

Material: aluminum, anodized

Length	clear
1.4 m (4' 7⅛")	940.80.140
1.6 m (5' 3")	940.80.160
1.8 m (5' 10⅞")	940.80.180
2.0 m (6' 6¾")	940.80.200
2.2 m (7' 2⅝")	940.80.220
2.5 m (8' 2 7/16")	940.80.250
3.0 m (9' 10⅛")	940.80.300
4.0 m (13' 1½")	940.80.400
6.0 m (19' 8¼")	940.80.600

Packing: 1 pc.

Installation plan: (included in fitting set), mounting instructions for planning and execution available upon request.

Supplementary parts:

Guide rail

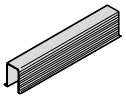

Material: plastic

Color	Item No.
black	940.41.130

Packing: 1 pc. (1.3 m (4' 3⅛")

Cover cap, for upper track

Material: rubber

Color	Item No.
gray	940.80.020

Packing: 1 pc.

Door stop, floor mounted

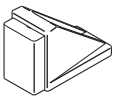

Material:

Color	Item No.
gray	940.80.052

Packing: 1 pc.

Calculating the upper track length (L):
L = CO x 2 + 120 mm (4¾")
CO = Clear opening

Accessories:
- Hawa Confort guides (page **251**)
- Hawa wall-mounted angle profile (page **249**)

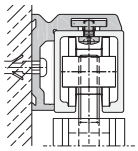

- Futura framing kit (pages **247 - 248**)

Dimensions in mm
Inches are approximate

Top Hung System

Divido 100/HSO – EKU

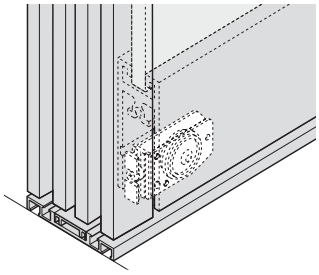

Characteristics:
- Suitable for 1 – 4 sliding doors
- Available with anodized aluminum fascias or clip components for attaching wood fascias
- Allows for wood and glass sliding door combinations
- Single upper running track can be ceiling or wall mounted

Technical data:
- Maximum door weight: **100 kg (220 lbs.)**
- Maximum door height: **2400 mm (7' 10 1/2")**
- Maximum door width: **1200 mm (3' 11 1/4")**
- Door thickness, wood: **30 mm (1 3/16")**
- Height adjustability: **+/- 3 mm (1/8")**

For door widths greater than 900 mm (35 7/16") it is recommended to use an additional lower guide. Refer to page **199** for detail.

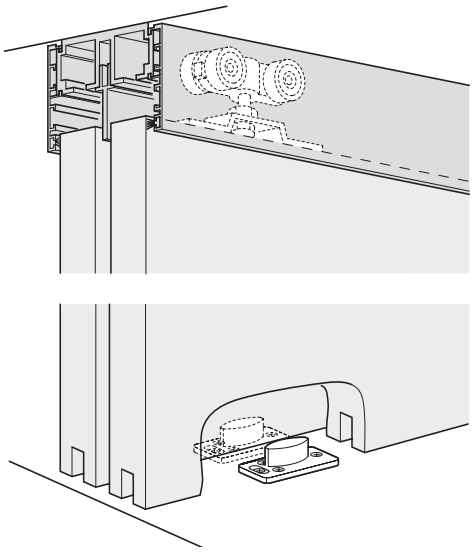

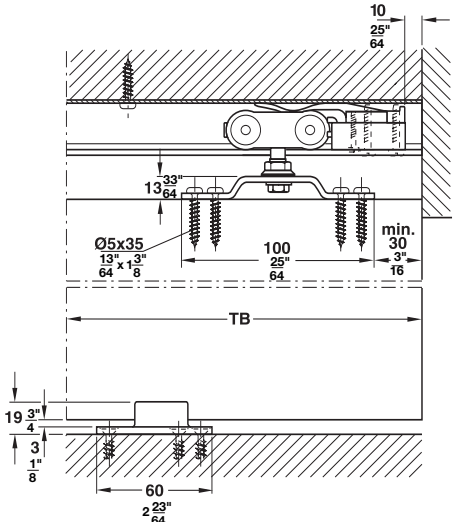

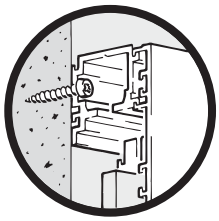

Wall mounted

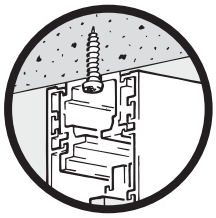

Ceiling mounted

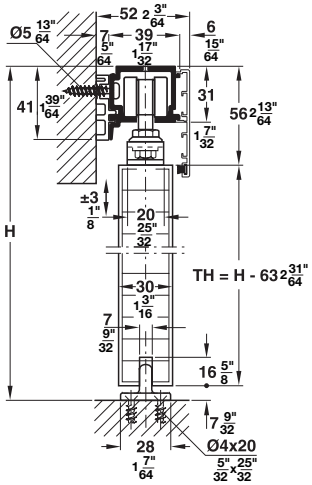

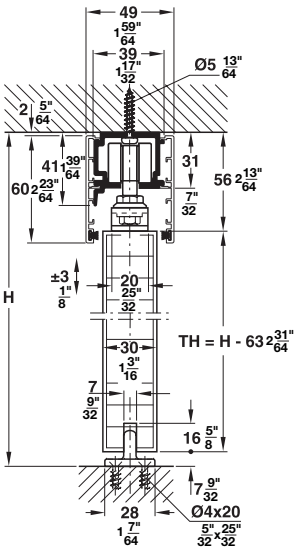

TH = Door height

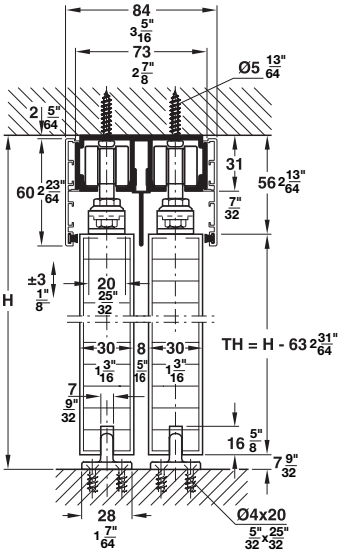

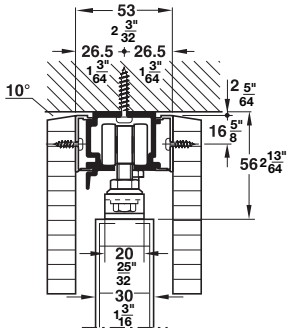

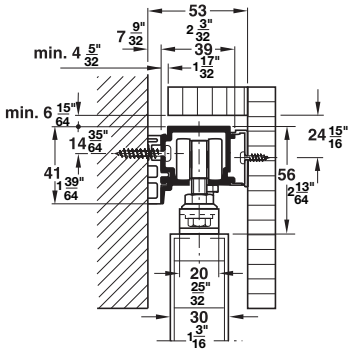

Option with wood fascia

Dimensions in mm
Inches are approximate

Dimensional data not binding. We reserve the right to alter specifications without notice.

Top Hung System

Divido 100/HSO – EKU

Complete fitting set for 1 sliding door without the upper running tracks:

Consisting of:	Description	Material/Color	**941.12.002**
	Running gear, with four wheels	plastic, white	2 pcs.
	Suspension bolt, M8 x 35 mm	steel, zinc-plated	2 pcs.
	Set nut, M8	steel, zinc-plated	2 pcs.
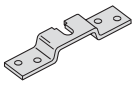	Suspension plate	steel, zinc-plated	2 pcs.
	Door stopper with adjustable retention spring	plastic, gray	2 pcs.
	Lower guide	plastic, anthracite gray	1 pc.
	Fixing screws		1 set

Packing: 1 set

Upper running tracks

	Description		Material	Item No.
	Single upper running track, 39 x 41 mm (1 9/16" x 1 5/8")	2.5 m (8’ 2 7/16") 3.5 m (11’ 5 13/16") 6.0 m (19’ 8 1/4")	aluminum, unanodized	941.00.253 941.00.353 941.00.603
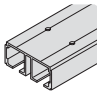	Dual upper running track, 73 x 31 mm (2 7/8" x 1 1/4")	2.5 m (8’ 2 7/16") 3.5 m (11’ 5 13/16") 6.0 m (19’ 8 1/4")	aluminum, anodized	941.12.925 941.12.935 941.12.960

Packing: 1pc.

Accessories

	Description		Material/Color	Packing	Item No.
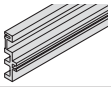	Spacer profile for wall mounting of single upper running track 11 x 36 mm (7/16" x 1 7/16”)	2.0 m (6’ 6 3/4")	plastic, gray	1 pc.	941.13.220
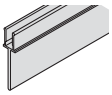	Clip-in skirt, 10 x 42 mm (3/8" x 1 11/16")	2.5 m (8’ 2 7/16") 3.5 m (11’ 5 13/16") 6.0 m (19’ 8 1/4")	aluminum, anodized	1 pc. 1 pc. 1 pc.	941.12.325 941.12.335 941.12.360
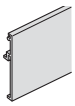	Clip-on fascia to upper running track, 7 x 60 mm (5/16" x 2 3/8")	2.5 m (8’ 2 7/16") 3.5 m (11’ 5 13/16") 6.0 m (19’ 8 1/4")	aluminum, anodized	1 pc. 1 pc. 1 pc.	941.12.425 941.12.435 941.12.460
	Brush seal for clip-on fascia, 5 x 5 mm (3/16" x 3/16")	10.0 m (32’ 9 11/16")	plastic, gray	1 roll	405.80.500
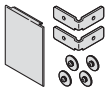	End piece to fascia, one-sided, wall mounted, 51 x 60 mm (2" x 2 3/8")		aluminum, anodized	1 set	941.12.060
	Clip piece for wood fascia, 30 x 10 x 47 mm, mounted every 400 – 600 mm (15 3/4" – 23 5/8")		aluminum, unanodized	1 pc.	941.00.065

Installation plan: (included in fitting set), mounting instructions for planning and execution available upon request.

Dimensions in mm
Inches are approximate

Top Hung System

Divido Synchro 100/HSO – EKU

Characteristics:
- Additional supplementary fitting set to Divido 100/HSO
- Simultaneous symmetrical opening of two top-hung sliding doors
- Available with anodized aluminum fascias or clip components for attaching wood fascias
- Single upper running track can be ceiling or wall mounted

Technical data:
- Maximum door weight: **100 kg (220 lbs.)**
- Maximum door height: **2400 mm (7' 10 1/2")**
- Maximum door width: **1200 mm (3' 11 1/4")**
- Door thickness, wood: **From 30 mm (1 3/16")**
- Height adjustability: **+/- 3 mm (1/8")**

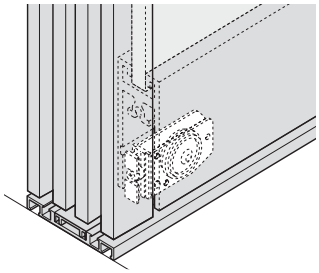

For door widths greater than 900 mm (35 7/16") it is recommended to use an additional lower guide. Refer to page **199** for detail.

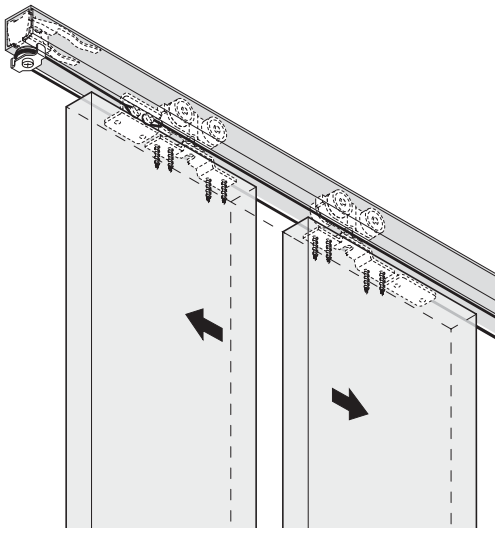

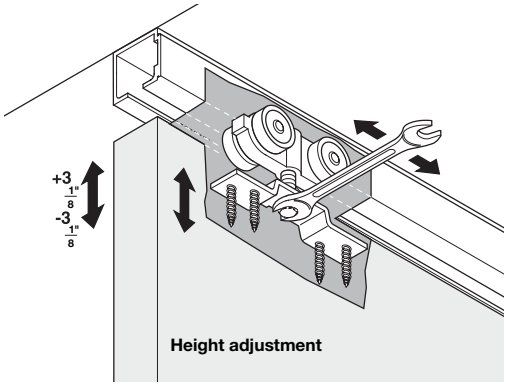

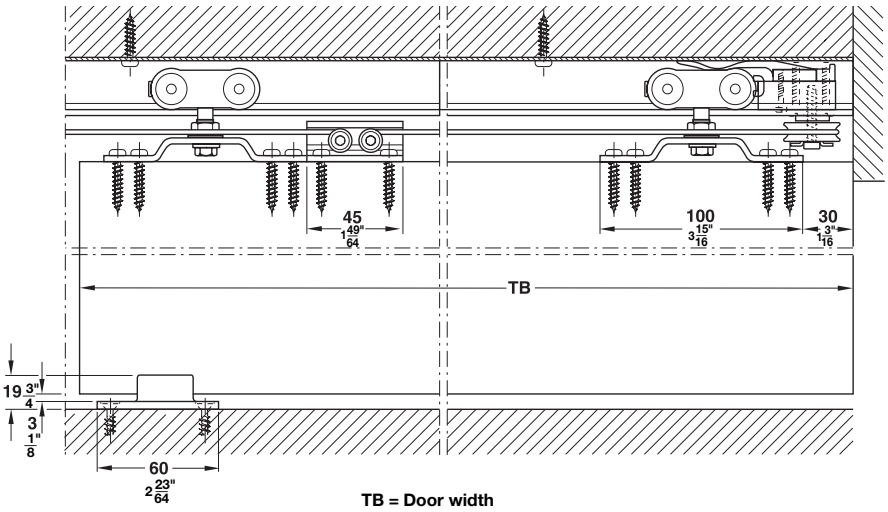

TB = Door width

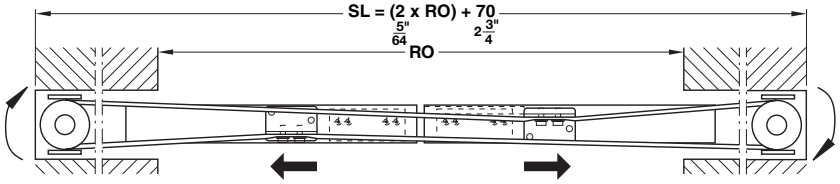

SL = Track length
RO = Clear opening

Dimensions in mm
Inches are approximate

Dimensional data not binding. We reserve the right to alter specifications without notice.

Top Hung System

Divido Synchro 100/HSO – EKU

Order specifications for Divido 100/HSO-Synchro
- 2 Divido 100/HSO sliding door fitting sets (page **173**)
- 1 Divido 100/HSO-Synchro supplementary fitting set (above)
- 1 Single upper running track
- 1 Clip-on fascia (optional)
- 1 End piece set for clip-on fascia (optional)
- Clip pieces to wood fascia (optional)

Supplementary fitting set for 2 sliding doors without the upper running tracks.

	Description	Material/Color	**941.12.005**
	Ball bearing wheel, mounted horizontally	plastic coated	2 pcs.
	Spacer ring	steel, zinc-plated	2 pcs.
	Rope safe guard	steel, zinc-plated	2 pcs.
	Fixing screw to rope safe guard	steel, zinc-plated	2 pcs.
	Mounting plate for Kevlar rope		2 pcs.
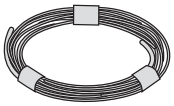	Kevlar rope, 10.0 m (32’ 9 11/16”)		1 roll
	Fixing screws	steel, zinc-plated	1 set

Packing: 1 set

Installation plan: (included in fitting set), mounting instructions for planning and execution available upon request.

Dimensions in mm
Inches are approximate

Top Hung System

Divido 100/HMO – EKU

Characteristics:
- Suitable for 1 – 4 sliding doors
- Allows for wood and glass sliding door combinations

Technical data:
- Maximum door weight: **100 kg (220 lbs.)**
- Maximum door height: **2400 mm (7' 10 1/2")**
- Maximum door width: **1200 mm (3' 11 1/4")**
- Door thickness, wood: **30 mm (1 3/16")**
- Height adjustability: **+ 1 mm (3/64")/ - 3 mm (1/8")**

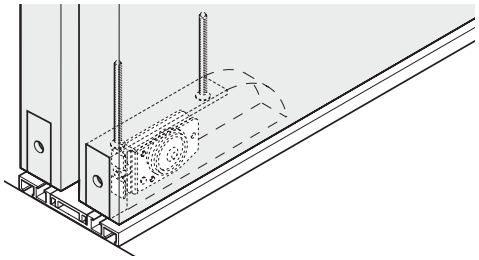

Lower guide with guide channel.
For door widths greater than 900 mm (35 7/16") it is recommended to use a lower guide channel. Refer to page **199** for detail.

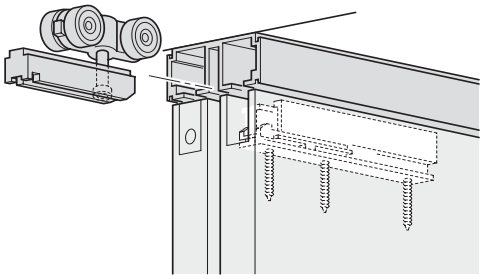

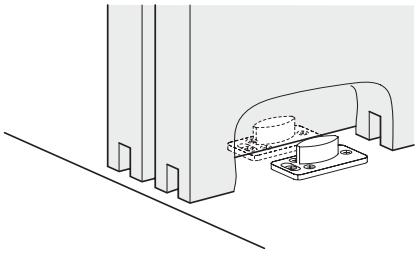

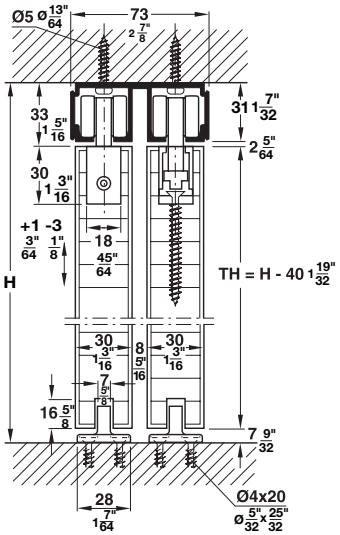

TH = Door height, H = Clear height

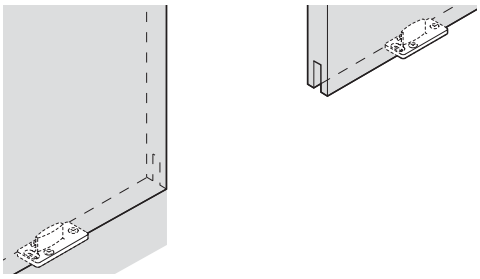

Lower guide without guide channel.

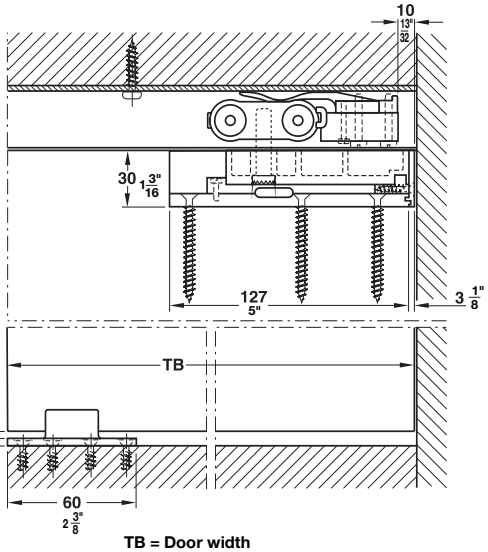

TB = Door width

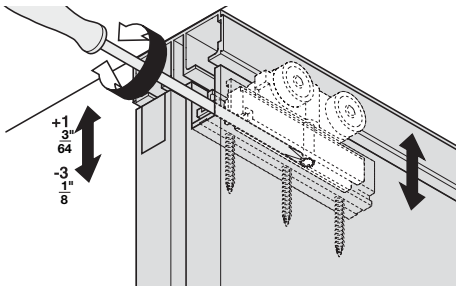

Height adjustment

Dimensions in mm
Inches are approximate

Dimensional data not binding. We reserve the right to alter specifications without notice.

Top Hung System

Divido 100/HMO – EKU

Complete fitting set for 1 sliding door without the upper running tracks:

	Description	Material/Color	**941.12.003**
	Running gear, with four wheels	plastic, white	2 pcs.
	Suspension bolt, M8 x 35 mm	steel, zinc-plated	2 pcs.
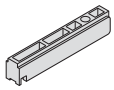	Carrier block	plastic, white	2 pcs.
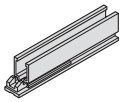	Suspension profile for carrier block	aluminum, unanodized	2 pcs.
	Cover cap, includes fixing screw	plastic, anthracite	2 pcs.
	Door stopper with adjustable retention spring	plastic, gray	2 pcs.
	Lower guide	plastic, anthracite gray	1 pc.
	Fixing screws		1 set

Packing: 1 set

Upper running tracks

	Description		Material	Item No.
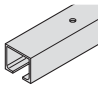	Single upper running track, 30 x 31 mm (1 3/16" x 1 1/4")	2.0 m (6’ 6 3/4") 2.5 m (8’ 2 7/16") 6.0 m (19’ 8 1/4")	aluminum, unanodized	941.00.200 941.00.250 941.00.600
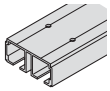	Dual upper running track, 73 x 31 mm (2 7/8" x 1 1/4")	2.5 m (8’ 2 7/16") 3.5 m (11’ 5 13/16") 6.0 m (19’ 8 1/4")	aluminum, anodized	941.12.925 941.12.935 941.12.960

Packing: 1 pc.

Installation plan: (included in fitting set), mounting instructions for planning and execution available upon request.

Dimensions in mm
Inches are approximate

SPECIFICATION SECTION

DIVISION 11 - EQUIPMENT

SONY

HDTV

Learn | Choose

Create your Personalized Shopping Guide

BRAVIA™ Line Up

Find the BRAVIA television that's right for you

Sony HDTV Lines

Summary	BRAVIA XBR® Series Television Sony's flagship LCD TV.	BRAVIA V Series Television Sony's step-up LCD TV.	BRAVIA S Series Television Sony's entry-level LCD TV.
Price	Starting from $4,099 or $117/mo	Starting from $1,999 or $57/mo	Starting from $1,999 or $57/mo
Screen Size	46, 40, and 32 inch diagonal screens	46, and 40 inch diagonal screens	46, 40, 32, 26, 23 inch diagonal screens
Resolution	Full HD 1080p (1920 x 1080)	Full HD 1080p (1920 x 1080)	720p (1366 x 768)
Key Features	• Optional bezels in 5 colors • Wide Color Gamut Sony LCD panel with S-PVA technology • ATSC integrated tuner • Three 1080p HDMI inputs, PC input (one HDMI input for 32 inch)	• Wide Color Gamut Sony LCD panel with S-PVA technology • ATSC integrated tuner • Two 1080p HDMI inputs, PC input	• Sony LCD panel with S-PVA technology • ATSC integrated tuner • HDMI inputs, PC input

BRAVIA™ LCD HDTVs

Not all LCD flat panels are created equal. Thanks to Sony's flat panel technology and 7th-Generation manufacturing, BRAVIA™ television stands apart.

Consider color.
Sony's Wide Color Gamut design reproduces 33% percent more colors than other LCDs. You'll see true reds, vivid greens and vibrant blues.

Consider viewing.
Sony's S-PVA panels achieve 178-degree viewing angle -- amazingly close to the full 180!

Consider speed.
Sony's S-PVA pixels achieve 6 millisecond response time. So you'll enjoy razor sharp motion for action movies and sports.

Full HD 1080p

Every pixel of performance.

HDMI 1080p inputs.
Sony's top BRAVIA televisions accept superb digital connections: HDMI 1080p inputs.

HDMI

Three HDMI™ inputs.
In addition, these televisions offer up to three HDMI™ inputs with 1080p capability. So can you enjoy the full performance of the latest 1080p sources, such as Blu-ray Disc™ players and the PLAYSTATION3 system.

Full HD 1080p

Did you know...
that many flat panel televisions can't display every pixel of high definition? Sony's top BRAVIA ™ models can. Feast your eyes on full 1080p (1920 x 1080) resolution.

Design

BRAVIA television looks really good on the wall. That's by design.

Sleek Styling.
With its slim design and stylish look, the BRAVIA only steals your eye when it's on.

5 inches thin

Freedom of expression.
Equipped with silver bezels, the KDL-46XBR2 and 40XBR2 also accept optional bezels in red, white, blue, black and brown.

TV, TV on the wall.
BRAVIA televisions are supplied with pedestals and they accept optional VESA wall mounts.

13 inches with pedestal

BRAVIA™ LCD HDTVs

Not all LCD flat panels are created equal. Thanks to Sony's flat panel technology and 7th-Generation manufacturing, BRAVIA™ television stands apart.

Consider color.
Sony's Wide Color Gamut design reproduces 33% percent more colors than other LCDs. You'll see true reds, vivid greens and vibrant blues.

Consider viewing.
Sony's S-PVA panels achieve 178-degree viewing angle -- amazingly close to the full 180!

Consider speed.
Sony's S-PVA pixels achieve 6 millisecond response time. So you'll enjoy razor sharp motion for action movies and sports.

Full HD 1080p

Every pixel of performance.

HDMI 1080p inputs.
Sony's top BRAVIA televisions accept superb digital connections: HDMI 1080p inputs.

HDMI

Three HDMI™ inputs.
In addition, these televisions offer up to three HDMI™ inputs with 1080p capability. So can you enjoy the full performance of the latest 1080p sources, such as Blu-ray Disc™ players and the PLAYSTATION3 system.

Did you know...
that many flat panel televisions can't display every pixel of high definition? Sony's top BRAVIA ™ models can. Feast your eyes on full 1080p (1920 x 1080) resolution.

Full HD 1080p

Design

BRAVIA television looks really good on the wall. That's by design.

Sleek Styling.
With its slim design and stylish look, the BRAVIA only steals your eye when it's on.

5 inches thin

Freedom of expression.
Equipped with silver bezels, the KDL-46XBR2 and 40XBR2 also accept optional bezels in red, white, blue, black and brown.

TV, TV on the wall.
BRAVIA televisions are supplied with pedestals and they accept optional VESA wall mounts.

13 inches with pedestal

Black Kenmore 18.5 cu. ft. Bottom Freezer Refrigerator with Factory-Installed Ice Maker

Sears item #04675939000 Mfr. model #75939

Other Colors Available:

$968.99
~~$1,019.99~~
Save $51.00
thru 03/03/07

Product images may differ from actual product appearance. Tires cannot be shipped to APO / FPO addresses.
Not all products are available at every Sears store. Online prices and promotions are for the continental U.S. only.

Styling:

Cabinet Color	Black
Door Color	Black
Door Style	Flat, textured
Handle Color	Black
Handle Type	Standard
Type	Bottom freezer

Capacity:

Freezer Section	5.6 cu. ft.
Overall	18.5 cu. ft.
Refrigerator Section	12.9 cu. ft.

Performance:

Kilowatt Hrs. per Year	475
Interior Lighting	Enhanced
Sound Reduction	Yes, low noise compressor
Energy Star Compliant	Yes

Freshness Features:

Advanced Cooling System	Yes, advanced temperature control
Air Filtration	No
Crispers	2 humidity-controlled crispers
Crisper Style ?	Clear

Snack/Deli Drawer	Yes
Temperature Controlled Meat/Vegetab	No
Temperature Controlled Snack/Deli D	Yes

Refrigeration Conveniences:

Adjustable Shelves	4
Advanced Storage Options	Yes, dairy compartment
Beverage Rack	Yes
Clear Adjustable Door Bins	5
Control Location	Up-front interior
Control Type	Electronic digital 1-7 controls
Opaque Adjustable Door Bins ?	0
Slide-Out Shelves	2
Specialty Storage	Egg/utility bin
Tilt Out Door Storage	1

Freezer Features:

Advanced Freezer Technology	Yes, advanced temperature control
Advanced Ice Production	No
Defrost System	Frost-free
Ice Maker	Yes
Ice Storage	No

Freezer Conveniences:

Adjustable Door Bins/Baskets	0
Door Bins/Baskets ?	1
Tilt-out Door Bins/Baskets	0
Removable Baskets	1
Slide-Out Baskets	1
Door Type	Swing

Durability:

Door Finish	Textured
Shelf Material	Glass, spill-proof

Dimensions:

Maximum Depth w/Handle	33-1/8 in.
Height w/out Hinge	65-5/8 in.
Maximum Height w/Hinge	66-3/4 in.
Maximum Width	29-5/8 in.
Depth w/out Handle	30-3/4 in.

Color:

Overall	Black

Stainless Steel w/Black Kenmore Elite 30 in. Electric Induction Cooktop

Sears item #02242800000 Mfr. model #42800

$1,619.99
~~$1,799.99~~
Save $180.00
thru 03/03/07

Product images may differ from actual product appearance. Tires cannot be shipped to APO / FPO addresses.
Not all products are available at every Sears store. Online prices and promotions are for the continental U.S. only.

Product Overview:

Item Weight	46.0 lbs.
General Warranty	1 year parts and labor
Type of Item	Large appliances

Electric Configuration:

No. of Elements/Cooking Zones	4
Element Configuration	Standard: 1-6 in. radiant, 1500/1200 watts 1-10 in. 2400/3200 watts nominal power/PowerBoost
Element Type	Induction (magnetic)
Safety Features	Automatic 18-hour shut off

Type:

Cooking Surface	Electric: induction glass surface
Cooking Zone	None, fixed elements/burners
Size	30 in.
Venting System	-

Controls:

Control Type(s)	Electronic touch pad controls
Control(s) Location	Front
Ease of Use	Built-in timer
Electronic Type	17 button electronic
Fan	Automatic

Light(s)	Power on light
Safety/In-Use Indicator(s)	Hot surface indicator(s) ON indicator(s)
Styling	Glass touch controls
Color:	
Control Dials/Knobs	Black
Overall	Stainless Steel w/Black
Top Surface	Black
Trim	Stainless Steel
Materials & Finishes:	
Control Panel	Ceramic-glass
Elements	Ceramic-glass
Frame	Stainless Steel
Subtop	Galvanized steel
Surface	Ceramic glass with stainless trim
Vent Air Channel	Steel
Dimensions:	
Depth, Burner Box	19-7/8 in.
Depth, Overall	21-1/2 in.
Height	2 in.
Maximum Width	30-3/4 in.
Cutouts:	
Clearance, above Cooktop	30 in. min.
Clearance, below Cooktop	4-1/2 in.
Clearance, Left Wall	7-1/2 in.
Clearance, Rear Wall	1-1/2 in.
Clearance, Right Wall	7-1/2 in.
Considerations	Never cut/modify cabinets w/o merchandise
Depth, Opening	20-1/4 in.
Height of Cooktop	1/2 in.
Min. to Front Edge of Counter	2-1/2 in.

Width, Opening	29-1/2 in.
Power Source:	
Electric Supply	240V/208V, 60Hz AC
Max. Amp Load	40
Power Cable Location	Right rear
Total Connected Load	7.4 kW @ 240V / 6.7 kW @ 208V
Power Source	Electric
Installation Options & Tips:	
Considerations	Requires a 3-wire w/ground circuit
Required Parts, Included	Mounting hardware
Included with Item:	
Other	Non-stick stainless steel skillet

Product and Cut-out Dimensions
Combination Microwave Oven
H4080BM

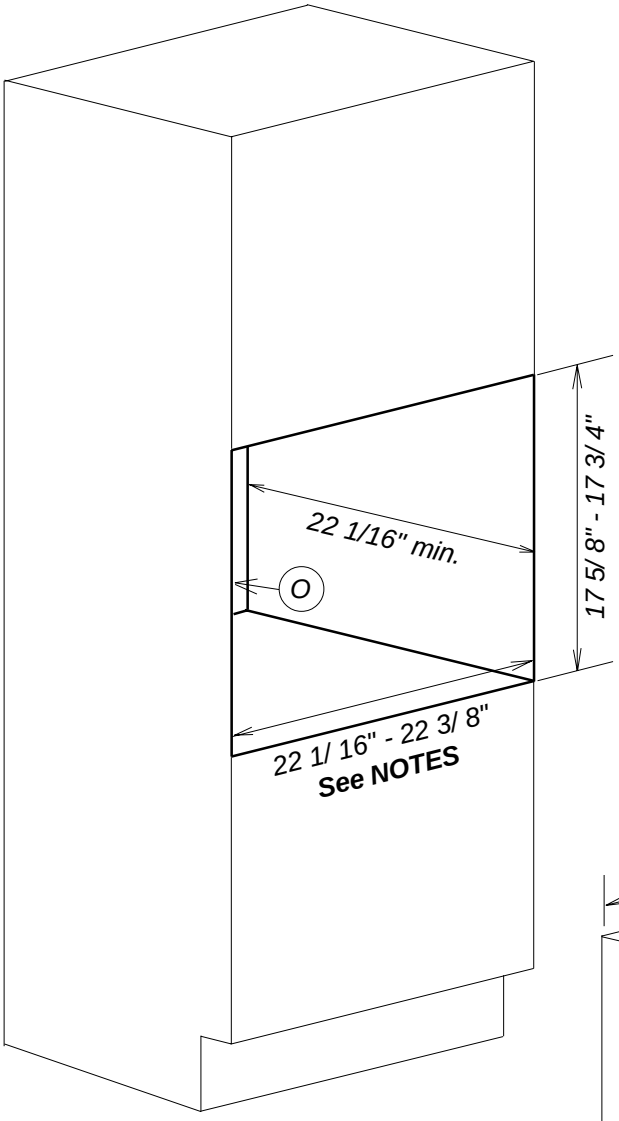

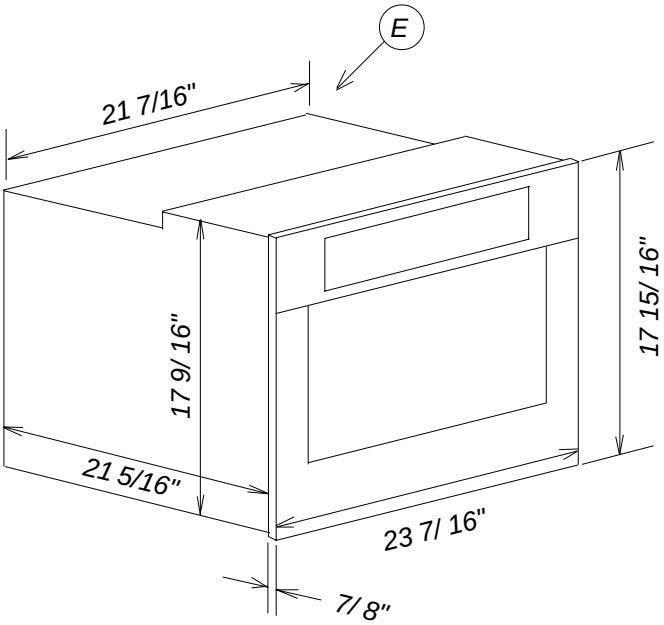

Location Codes
E - 5 foot electrical main with plug connects upper rear right side O - 208 - 240 Volt - 20 Amp 4 wire connection with NEMA 14-30R. Location must be accessible
Notes
• Width with optional EBA Trim Kits: EBA4470 26" - 26 1/4" EBA4476 28 3/8" - 28 1/2" • All installations must be done in accordance with local codes.

NOTE: Drawing is not to scale.
SPECIFICATION SHEETS 151105

LG PRODUCT INFORMATION

5 Reasons to Buy Steam:

1. Superior Washing Performance
2. Water Saving
3. Energy Saving
4. Steam Refresh
5. Washer & Dryer

* Actual product may differ slightly to that depicted for ongoing product improvement

WD-1247RD

Steam Combined Washer & Dryer

NEW MODEL

Available: SEPTEMBER 2006

FEATURES

9kg Wash / 5kg Dry
1200rpm
Steam Refresh
Direct Drive Motor
Intelligent Washing System
Water Recirculation
Load Sensing
9 Wash Programs / 5 Options / 5 Dry Programs
4 Star Water Rating
4.5 Star Energy Rating (Wash) / 2 Star (Dry)
2006 TESAW Award Winner
MRP: $2874

WD-1247RD Specifications

Wash Capacity	9kg	**Dry Capacity**	5kg
Colour	White with Silver Trim	**Drying Method**	Condensing
Motor Type	Direct Drive	**Sensor Dry**	●
Water Recirculation	●	**Drying Options**	
Load Sensing	●	*Time Dry*	● (30/60/90/120/150)
Auto Balance	●	*More*	●
Suds Dectection	●	*Normal*	●
Control	Electronic Control	*Iron*	●
Variable Spin Speed	1200/1000/800/400/No Spin	*Low Temp*	●
Variable Temperature	95/60/40/30/Cold	**LED Display**	●
Door Diameter	350mm	*Time Delay*	3 ~ 19hrs
Door Opening Angle	170°	*Running Time / Status*	●
Washing Programs	9	*Error / Self Diagnosis*	●
Refresh	●	**Washing Noise Level**	53dB
Baby Care	●	**Spinning Noise Level**	66dB
Cotton	●	**Water Rating**	4 Star
Synthetic	●	**Water Consumption**	87L
Delicate	●	**Energy Rating**	
Wool/Silk	●	*Wash*	4.5 Star
Hand Wash	●	*Dry*	2 Star
Duvet	●	**Energy Consumption**	
Quick 30	●	*Wash*	275kWh
Options	Eco Steam, Less Steam, Dry Only,	*Dry*	229kWh
	Rinse + Spin, Prewash	**Dimension (WxDxH)**	635x720x925mm
Rinse Options	Normal, Rinse+, Medic Rinse,	**Weight**	85kg
	Normal + Hold, Rinse+ + Hold	**Warranty**	2 Years + 8 Years on Motor*
Turbo Steam	●	**EAN CODE**	8801031755189

* 8 additional years on Direc t Drive motor part only excluding labour

SHOP/SALESMAN:
TEL/Mobile:
FAX:
e-mail:

LG Electronics Australia
2 Wonderland Drive
Eastern Creek NSW 2766
Tel: 02-8805-4000
Fax: 02-8805-4001

Life's Good

Note: Features and Specs are subject to change for further product development. WD-1247RD_Spec_060829.xls

SPECIFICATION SECTION

DIVISION 12 - FURNISHINGS

Section 12355 Residential Casework

Teragren, concerned with quality and sustainability

Since 1994, the founders of Teragren LLC have upheld a mission to help reduce the dependence on dwindling timber resources by manufacturing competitively priced, sustainably harvested bamboo flooring, panels and veneer.

As a manufacturer, Teragren directly controls production and quality

- Eleven manufacturing and quality assurance checkpoints.
- Strict management of moisture content to eliminate cupping and warping.
- Advanced state-of-the-art equipment to fortify durability.
- Independent U.S. testing results readily available to consumers.

Optimum 5.5™ Moso bamboo, harvested for performance

- Teragren uses only Optimum 5.5 Moso bamboo selected for its dense fibers (less expensive, softer bamboo species do not perform as well).
- The bamboo is harvested at maturity between 5½ to 6 years to achieve the highest level of hardness and enduring performance.
- Teragren bamboo panels and veneer are dimensionally more stable than maple and perform very favorably compared to traditional hardwoods.

Stringent standards for safety and sustainability add peace of mind

- Teragren uses only sustainably grown Optimum 5.5 Moso bamboo.
- Teragren's proprietary manufacturing adhesive emits formaldehyde at much lower levels than allowed by the strictest U.S. and European standards.
- Teragren's factories are ISO 9001:2000 and ISO 14001 certified for quality assurance.

Teragren Strand bamboo: U.S. Patent 5,543,197; Mexico Patent 204281

Coordinating Teragren bamboo flooring and accessories

Teragren bamboo flooring, stair parts, trim and floor vents are also made to exacting standards. For more information, ask for our flooring catalog or visit *www.teragren.com* to download the catalog in PDF format.

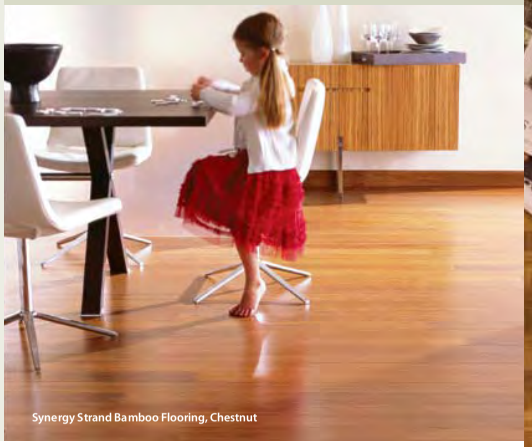

Synergy Strand Bamboo Flooring, Chestnut

Teragren
Fine Bamboo Flooring, Panels & Veneer

12715 Miller Road NE, Suite 301, Bainbridge Island, WA 98110
toll-free: 800.929.6333 tel: 206.842.9477
fax: 206.842.9456 email: info@teragren.com

www.teragren.com

Member: Architectural Woodwork Institute, Hardwood Plywood Veneer Association, American Institute of Architects, IIDA, U.S. Green Building Council, Business for Social Responsibility, World Floor Covering Association, National Association of Floor Covering Distributors, National Wood Flooring Association, National Kitchen & Bath Association.

Beautiful, Durable, Renewable Bamboo®

Panels, Veneer & Parquet Butcher Block

Teragren

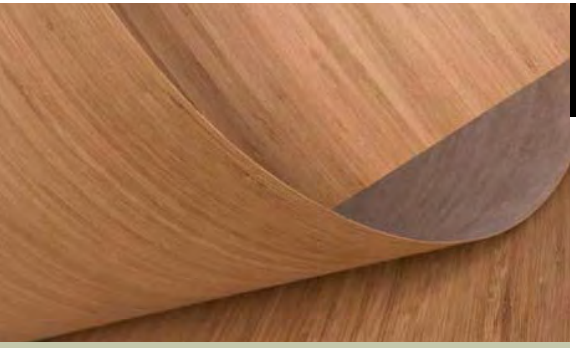

Why Teragren bamboo?

Uncommon beauty and versatility
The subtle grains and colors of Teragren bamboo hardwood panels, veneer and parquet butcher block complement an array of design styles from classic to contemporary in residential and commercial interior installations. Teragren also manufactures flooring, stair parts, moldings and floor vents in the same grains and colors as Teragren panels and veneer.

Durable and dimensionally stable
Teragren products are made from Optimum 5.5™ Moso bamboo (*Phyllostachys pubescens*) sustainably harvested at maturity between 5½ and 6 years for maximum stability and hardness. The result is products that are 25% harder than oak, 12% harder than maple, and contract and expand 2.5 times less than most traditional hardwoods. (View test results at *www.teragren.com*)

Multiple sizes to fit most projects and budgets
Teragren manufactures panels, veneer, parquet butcher block and edge banding in a wide range of sizes, grains and colors. This allows you the most flexibility in designing economically and efficiently.

Renewable and safe with two LEED® credits
Teragren bamboo panel and veneer products contribute to certification under the U.S. Green Building Council's LEED (Leadership in Energy & Environmental Design) Rating System: MR Credit 6: Rapidly Renewable Materials. To meet IEQ Credit 4.4, ask about our LEED Enhanced IEQ 4.4-compliant products that utilize a non-urea formaldehyde adhesive. Teragren's proprietary manufacturing adhesive emits formaldehyde at levels far below those allowed by the strictest standards in Europe and the U.S.

Customer service—custom orders, tech and specs online
Teragren tech support is very experienced in working with the materials in workshop situations and can also help you with custom orders, should the need arise. Specs available at *www.teragren.com*.

Available inventory, on-time delivery
Teragren panels and veneer are offered by stocking distributors across North America. In addition, Teragren maintains supplemental inventory in the United States to ensure available inventory and on-time delivery.

Cover photo: **Studio Vertical Grain Caramelized flooring and Bamboo Parquet Butcher Block.**

Complete Product Line

Hardwood panels and veneer for cabinetry, furniture, trim, doors, countertops or any interior building use.

- Grains: Vertical, Flat
- Colors: Natural, Caramelized
- Coordinating bamboo flooring, stair parts and flooring accessories
- Custom sizes available

Panels:
1´ x 6´ x ⅝˝ or ¾˝
1´ x 8´ x 13⁄16˝
4´ x 8´ x ¾˝ cross-ply
4´ x 8´ x ¾˝ solid stock
4´ x 8´ x ¼˝

Veneer:
4´ x 8´ x ⅛˝
17˝ x 98½˝ x 1⁄42˝
49˝ x 98½˝ x 1⁄42˝

Parquet butcher block:
30˝ x 96˝ x 1½˝
36˝ x 72˝ x 1½˝

Edge-banding:
Rolls: ⅞˝ x 500´ x 1⁄42˝

Custom-size panels or butcher blocks:
Available up to 4´ x 8´ x 3˝

Architectural casings:
2˝ x 96˝ x ¾˝
3⅝˝ x 96˝ x ¾˝


Flat Grain Natural


Flat Grain Caramelized


Vertical Grain Natural


Vertical Grain Caramelized


Butcher Block Natural


Butcher Block Caramelized

Strand panels are made from bamboo strands fused together with an environmentally safe adhesive to create a product 100% harder than red oak.

- Colors: Wheat or Chestnut
- Call for dimensions available


Wheat Strand Bamboo


Chestnut Strand Bamboo

Teragren Strand bamboo: U.S. Patent 5,543,197; Mexico Patent 204281

Fine Bamboo Panels, Veneer & Butcher Block

High-performance, furniture-grade bamboo hardwood panels and veneer

To assure performance and quality demanded of furniture-grade hardwood panels and veneer, Teragren products are professionally tested for hardness, adhesive formaldehyde levels, moisture content, deflection, flexural/strength, flammability, smoke density, compression strength, tensile strength and screw-holding both face and edge. Specifications, test results and Material Safety Data Sheets are available online at *www.teragren.com*.

Cross-ply Panels

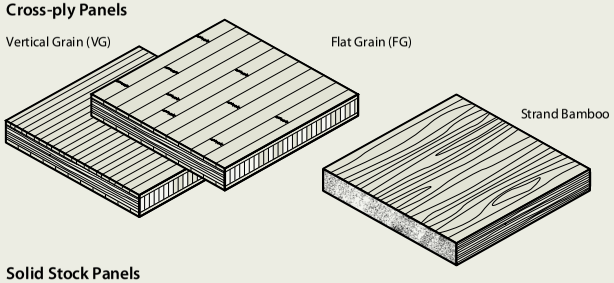

Solid Stock Panels


4´ x 8´ x 1⁄42˝ Veneer, Vertical Grain Caramelized


4´ x 8´ x ¾˝ Cross-ply Panels, Flat Grain Natural


4´ x 8´ x ¾˝ Panels, Vertical Grain Natural


Bamboo Parquet Butcher Block, Caramelized


4´ x 8´ x ¾˝ Cross-ply Panels, Vertical Grain Caramelized

www.teragren.com • e-mail: info@teragren.com • 800.929.6333

Teragren

FINE BAMBOO FLOORING, PANELS & VENEER

PRINT THIS PAGE RETURN TO SITE

Teragren LLC
12715 Miller Road N.E. Suite 301
Bainbridge Island, WA 98110

Emergency Phone: (206) 842-9477
Additional Information: (800) 929-6333
Email: Ann Knight

This Material Safety Data Sheet (MSDS) applies to all Teragren bamboo panels and veneer except the 1/42" veneer.

1. Product Identification

Product	Manufacturing Location
Unfinished Vertical Grain Panels Unfinished Flat Grain Panels	USA Headquarters - Bainbridge Island, WA.
Prefinished Vertical Grain Panels Prefinished Flat Grain Panels	USA Headquarters - Bainbridge Island, WA.

Synonyms: Bamboo Paneling, Cabinetry and Furniture System

2. Hazardous Ingredients/Identity Information

Name	CAS#	Percent	Agency	Exposure Limits	Comments
Bamboo[1]	None	88-89	OSHA OSHA ACGIH ACGIH	PEL-TWA 15 mg/m3 PEL-TWA 5 mg/m3 TLV-TWA 3 mg/m3 TLV-STEL 10 mg/m3	Total dust Respirable dust fraction Respirable dust fraction Inhalable particles
Urea formaldehyde resin solids[2]	9011-05-6	10-11	OSHA OSHA ACGIH	PEL-TWA 0.75 ppm PEL-STEL 2 ppm TLV- Ceiling 0.3 ppm	Free gaseous formaldehyde Free gaseous formaldehyde Free gaseous formaldehyde
UV Finish[3] Polymerized polyurethane	None	0-1	OSHA ACGIH	PEL-TWA None TLV-TWA None	None None

[1]Bamboo is a member of the grass family which has distinct anatomical differences from that of wood. Therefore, bamboo would be regulated as an organic dust in a category known as "Particulates Not Otherwise Regulated" (PNOR), or Nuisance Dust. By OSHA. The ACGIH classifies dust or particulate in this category as "Particulates Not otherwise Specified".

[2]Contains less than 0.1% free formaldehyde

[3]For pre-finished flooring

3. Hazard Identification

Appearance and Odor: A matrix of natural/blonde or caramel colored interlocking bamboo fibers bonded with low-fuming urea formaldehyde resin having a slightly aromatic odor.

Primary Health Hazards: The primary health hazards posed by these products are thought to be due to exposure to dust generated when machining this product (e.g. sanding, sawing, routing and or planning) and to a much lesser extent free gaseous formaldehyde.

Primary Route(s) of Exposure:
( ) Ingestion:
(X) Skin: Dust
(X) Inhalation: Dust or gas

Medical Conditions Generally Aggravated by Exposure: Gaseous formaldehyde or dust may aggravate preexisting respiratory conditions or allergies.

Chronic Health Hazards: Bamboo dust has not been associated with any long term health effects including cancer in animals as well as humans.

Carcinogenicity Listing:
(X) NTP: Formaldehyde, Group 2, A & B
(X) IARC Monographs: Formaldehyde, Group 2A;
(X) OSHA Regulated: Formaldehyde

NTP - Group 2: Reasonably anticipated to be a carcinogen. A) Limited evidence of carcinogenicity from studies in humans which indicates that causal relationship is credible.

B) Sufficient evidence of carcinogenicity from studies in experimental animals

IARC - Group 2A: Probably carcinogenic to humans; limited human evidence and sufficient evidence in experimental animals. Studies of cancer incidence among workers in a wide variety of occupations have failed to convincingly show carcinogenic activity of formaldehyde in humans. Gaseous formaldehyde has been shown to cause cancer in certain laboratory animals after long-term exposure to very high concentrations (14+ ppm), far above the levels of formaldehyde gas emitted by this product.

4. Emergency and First-Aid Procedures

Ingestion: Not applicable under normal use.

Eye Contact: Dust may cause mechanical irritation. Treat dust in eye as foreign object. Flush with water to remove dust particles. Get medical help if irritation persists.

Skin Contact: Although not applicable for this product in its purchased form, high concentrations of gaseous formaldehyde may cause allergic contact dermatitis in sensitized individuals resulting in redness, itching, and occasionally, hives. Frequent handling of dust or product in its manufactured form may cause some minor drying of the skin, mechanical abrasion, cuts or slivers. Wash hands after handling and obtain medical help if rash or irritation occurs.

Skin Absorption: Not known to occur under normal use.

Inhalation: Although not applicable for this product in it's purchased form (actual formaldehyde gas release levels from TimberGrass® Panel Products are 0.015 ppm). However, gaseous formaldehyde may cause respiratory difficulties for sensitized/allergic individuals. Bamboo dust may cause obstruction in the nasal passages, resulting in dryness of nose, dry cough and sneezing. Remove to fresh air. Get medical help if persistent irritation, severe coughing or breathing difficulty

occurs.

5. Fire and Explosion Data

Flash Point (Method Used): NAP

Flammable Limits:
LEL: NAP
UEL: NAP

Extinguishing Media: Water, carbon dioxide, sand or dry chemical.

Autoignition Temperature: Variable [typically 400-500oF (204-260oC)]

Special Firefighting Procedures: None.

Unusual Fire and Explosion Hazards: None

6. Accidental Release Measures

Steps to be Taken In Case Material Is Released or Spilled: Not applicable for product in purchased form. Dust generated from sawing, sanding, drilling, or routing of products may be vacuumed or shoveled for recovery or disposal. Avoid dusty conditions and provide good ventilation. A NIOSH-approved dust respirator should be worn if dust exposure limits are exceeded.

7. Handling and Storage

Precautions to be Taken In Handling and Storage: No special handling precautions are required for products in purchased form. Keep in cool, dry place away from open flame. This product will release small quantities of gaseous formaldehyde (0.01 ppm in accordance with ASTM E1333 test methods). Store in well ventilated area.

8. Exposure Control Measures

Personal Protective Equipment:

RESPIRATORY PROTECTION -- Not applicable for product in purchased form. A NIOSH-approved dust respirator is recommended when allowable exposure limits are exceeded.

PROTECTIVE GLOVES -- Not required. However, cloth, canvas, or leather gloves are recommended to minimize potential mechanical irritation slivers from handling and machining product.

EYE PROTECTION -- Not applicable for product in purchased form. Goggles or safety glasses are recommended when machining this product.

OTHER PROTECTIVE CLOTHING OR EQUIPMENT -- Not applicable for product in purchased form. Outer garments may be desirable in extremely dusty areas.

WORK/HYGIENE PRACTICES -- Follow good hygienic and housekeeping practices. Clean up areas where wood dust settles to avoid excessive accumulation of this combustible material. Minimize blowdown or other practices that generate high airborne-dust concentrations.

Ventilation:

LOCAL EXHAUST -- Provide local exhaust as needed so that exposure limits are met.

MECHANICAL (GENERAL) -- Provide general ventilation in processing and storage areas so that exposure limits are met.

SPECIAL - None.

OTHER - None.

9. Physical/Chemical Properties

Boiling Point (@ 760 mm Hg): NAP

Vapor Pressure (mm Hg): NAP

Vapor Density (air = 1; 1 atm): NAP

Specific Gravity (H2O = 1): 0.58 g/ml

Melting Point: NAP

Evaporation Rate (Butyl acetate = 1): NAP

Solubility in Water (% by weight): 0.1

% Volatile by Volume [@ 70oF (21oC)]: 0

pH: NAP

Oil-water distribution coefficient: NAP

Odor threshold: ND

10. Stability and Reactivity

Stability: ( ) Unstable (x) Stable

Conditions to Avoid: Avoid open flame. Product may ignite at temperatures in excess of 400oF (204oC).

Incompatibility (Materials to Avoid): Avoid contact with oxidizing agents.

Hazardous Decomposition or By-Products: Thermal decomposition products include carbon monoxide, carbon dioxide, aliphatic aldehydes, rosin acids, terpenes, and polycyclic aromatic hydrocarbons.

Hazardous Polymerization: ( ) May occur (x) Will not occur

Sensitivity to Mechanical Impact: NAP

Sensitivity to Static Discharge: NAP

11. Toxicological Information

None available for product in purchased form.

Formaldehyde OSHA Hazard rating = 3 for local and systemic acute and chronic exposures; highly toxic. Irritation studies: human skin, 150 ug/3 days, intermittent exposure produced mild results; human eye, 1 ppm/6 minutes, produced mild results. Toxicity studies: human inhalation TCLO of 8 ppm reported but response not specified; human inhalation TCLO of 17/mg/m3 for 30 minutes produced eye and pulmonary results; human inhalation TCLO of 300ug/m3 produced nose and CNS results; LC50 (rat, inhalation) = 1,000 mg/m3/30 minutes; LC50 (mice, inhalation) = 400mg/m3/2 hours.

Sources: Lewis, R.J., Sr. 1992 Sax's Dangerous Properties of Industrial Materials, Eighth Edition, Van Nostrand Reinhold, NY.; NIOSH Registry of Toxic Effects of Chemical Substances (RTECS), 1983-1984 Cumulative Supplement to 1981-1982 Edition and May 1995; OSHA Regulated Hazardous Substances, Government Institutes, Inc., February 1990.

12. Ecological Information

No information available at this time.

13. Disposal Considerations

Waste Disposal Method: If disposed of or discarded in its purchased form, incineration is preferable. Dry land disposal is acceptable in most states. It is, however, the user's responsibility to determine at the time of disposal whether your product meets RCRA criteria for hazardous waste. Follow applicable federal, state, and local regulations.

14. Transport Information

Not regulated as a hazardous material by the U.S. Department of Transportation.

Not listed as a hazardous material in Canadian Transportation of Dangerous Goods (TDG) regulations.

15. Regulatory Information

TSCA

All ingredients are on the TSCA inventory or are not required to be listed on the TSCA inventory.

Chemicals listed:
Formaldehyde CAS# 50-00-0

DSL

All ingredients are listed or are not required to be listed under the Canadian Domestic Substance List.

Chemicals listed:
Formaldehyde CAS# 50-00-0

WHMIS Classification

Not a controlled product

STATE RIGHT-TO KNOW

- California Prop 65 -This product contains formaldehyde which depending on temperature and humidity may be emitted from the product. Formaldehyde is a compound that is known in the State of California to cause cancer. Teragren LLC has evaluated formaldehyde emission rates from its products (typical range of 0-0.01 ppm) and have found these rates to be below the no significant risk level that would require product warnings.

- New Jersey - Not listed

- Pennsylvania -This product contains formaldehyde which depending on temperature and humidity may be emitted from the product.

SARA 313 Information

This product contains formaldehyde at a concentration that subjects the chemical to SARA Title III Section 313 supplier notification requirements. However, the emissions characteristics and concentrations have been measure using ASTM E1333 test methods (typical average concentration of 0.015 ppm equates to a yearly emission rate of 0.01 lbs/yr). This emission rate falls well below the Threshold Planning Requirement for Formaldehyde of 500 lbs.

SARA 311/312 Hazard Category

This product has been reviewed according to the EPA "Hazard Categories" promulgated under SARA Title III Sections 311 and 312 and is considered, under applicable definitions, to meet the following categories:

- An immediate (acute) health hazard - yes - dust only

- A delayed (chronic) health hazard - no

- A fire hazard - no

- A reactivity hazard - no

- A sudden release hazard - no

16. Additional Information

Date Prepared: 07/28/03

Date Revised: 8/12/03

Prepared By: Van Fidino CIH Clayton Group Services

User's Responsibility: The information contained in this Material Safety Data Sheet is based on the experience of occupational health and safety professionals and comes from sources believed to be accurate or otherwise technically correct. It is the user's responsibility to determine if this information is suitable for their applications and to follow safety precautions as may be necessary. The user has the responsibility to make sure that this sheet is the most up-to-date issue.

Definition of Common Terms:

ACGIH = American Conference of Governmental Industrial Hygienists

C = Ceiling Limit

CAS# = Chemical Abstracts System Number

DSL = Canadian Domestic Substance List

EPA = U.S. Environmental Protection Agency

IARC = International Agency for Research on Cancer

LCLo = Lowest concentration in air resulting in death

LC50 = Concentration in air resulting in death to 50% of experimental animals

LDLo = Lowest dose resulting in death

LD50 = Administered dose resulting in death to 50% of experimental animals

MSHA = Mining Safety and Health Administration

ND = Not Determined

NAP = Not Applicable

NAV = Not Available

NIOSH = National Institute for Occupational Safety and Health

NTP = National Toxicology Program

OSHA = Occupational Safety and Health Administration

PEL = Permissible Exposure Limit

PPM = Parts of gas or vapor per million parts of air

RCRA = Resource Conservation and Recovery Act

STEL = Short-Term Exposure Limit (15 minutes)

TDG = Canadian Transportation of Dangerous Goods

TCLo = Lowest concentration in air resulting in a toxic effect

TDLo = Lowest dose resulting in a toxic effect

TLV = Threshold Limit Value

TSCA = Toxic Substance Control Act

TWA = Time-Weighted Average (8 hours)

WHMIS = Workplace Hazardous Materials Information System

07/04

SPECIFICATION SECTION

DIVISION 13 - SPECIAL CONSTRUCTION

HIT PHOTOVOLTAIC MODULES

Models: HIP-180BA3, HIP-186BA3, HIP-190BA3, HIP-195BA3, HIP-200BA3, HIP-205BA3

Power Output: 180 - 205 Watts

Cell Efficiency: 17.8% - 20.2%

Module Efficiency: 15.3% - 17.4%

Proprietary Technology

SANYO HIT (**H**eterojunction with **I**ntrinsic **T**hin layer) solar cells are hybrids of single crystalline silicon surrounded by ultra-thin amorphous silicon layers.

High Efficiency

SANYO HIT solar panels are a leader in cell and module efficiency. With models up to 16.2 Watts per sq. foot (17.4% module efficiency) you obtain maximum power within a fixed amount of space. You save costs for using fewer support materials, wiring, and spend less time installing. The powerful modules are ideal for grid-connected solar systems, areas with performance-based incentives, and renewable energy credits.

Temperature Attributes

As temperatures rise, SANYO HIT solar panels produce more electricity (kWh) than conventional crystalline silicon solar panels at the same temperature.

Unique Structure

SANYO HIT solar panels have a black anodized double-wall aluminum frame. The panels come pre-equipped with a touch-safe junction box, lead wires, MC™ plug-n-play connectors, and a unique mounting lip, all of which help to minimize support structure materials, installation time and costs.

Valuable Features

SANYO HIT solar panels have no moving parts and weigh less than 31 pounds (14kg). The panels are 100% emission and noise free. The panels come with a 20-year Limited Power Output Warranty and a 2-year Limited Product Workmanship Warranty. Panels are UL 1703 safety rated for wind, fire and hail. You can transport the panels to a site using less space and our eco-package minimizes cardboard waste deposited in a customer's trash.

Quality, Ratings, Reliability

SANYO silicon wafers are manufactured in the USA, and the panels are assembled in Mexico. All SANYO solar factories in North America are ISO 9001 and 14001 certified. The panels undergo strict inspections to ensure electrical, mechanical, environmental, and visual compliance. SANYO's conservative model ratings give customers more kWh per rated kW, and assist to more accurately predict performance and financial economics.

SANYO HIT Solar Cell Structure

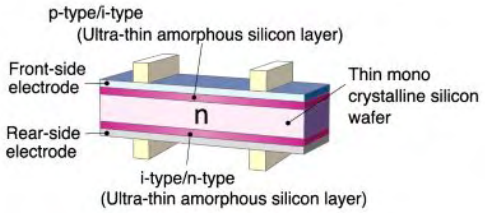

Unnecessary Section When Using SANYO HIT

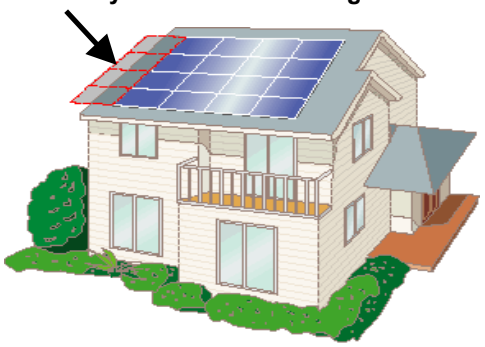

Increased Energy When Using SANYO HIT

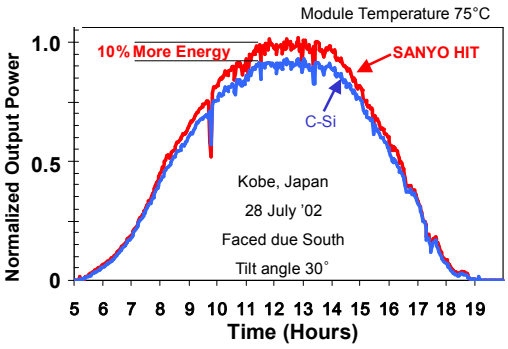

Models HIP-xxxBA3

Electrical Specifications

		180	186	190	195	200	205
Rated Power (Pmax)[1]	W	180	186	190	195	200	205
Maximum Power Voltage (Vpm)	V	54.0	54.4	54.8	55.3	55.8	56.7
Maximum Power Current (Ipm)	A	3.33	3.42	3.47	3.53	3.59	3.62
Open Circuit Voltage (Voc)	V	66.4	67.0	67.5	68.1	68.7	68.8
Short Circuit Current (Isc)	A	3.65	3.71	3.75	3.79	3.83	3.84
Minimum Power (Pmin)	W	162.0	167.4	171.0	175.5	180.0	184.5
Max System Voltage (Vsys)	V	600	600	600	600	600	600
Series Fuse Rating	A	15	15	15	15	15	15
Temperature Coefficient (Pmax)	%/°C	-0.33	-0.30	-0.30	-0.30	-0.29	-0.29
Temperature Coefficient (Voc)	V/°C	-0.173	-0.168	-0.169	-0.170	-0.172	-0.172
Temperature Coefficient (Isc)	mA/°C	1.10	0.85	0.86	0.87	0.88	0.88
Electrical Tolerance	%	+/- 10	+/- 10	+/- 10	+/- 10	+/- 10	+/- 10
PTC Rating[2]	W	168.0	174.9	178.7	183.5	188.7	193.4
Cell Efficiency	%	17.8	18.4	18.8	19.3	19.7	20.2
Module Efficiency	%	15.3	15.8	16.1	16.5	17.0	17.4
Power per Square Foot	W	14.2	14.7	15.0	15.4	15.8	16.2

Mechanical Specifications

Internal Bypass Diodes	4 Bypass Diodes
Module Area (m^2)	12.69 Ft^2 (1.18m^2)
Weight (kg)	30.86 Lbs. (14kg)
NOCT (°C)	112°F (44.2°C)
Dimensions LxWxH (mm)	51.9x35.2x1.4in (1319x894x35mm)
Cable Length -Male/+Female (mm)	30.7/24.8in (780/630mm)
Cable Size / Connector Type	No.12 AWG / MC™ Connectors
Static Load Wind / Snow (Pa)	50PSF (2400Pa) / 39PSF (1876Pa)
Pallet Dimensions LxWxH (mm)	53x36x63in (1346x912x1600mm)
Pieces per Full Pallet / Weight (kg)	36pcs / 1102 Lbs (500kg)
Quantity per 20'/40'/53' Container	360pcs / 756pcs / 972pcs

Standard Operating Conditions (SOC) and Safety Ratings

SOC Temperature[3]	-4°F to 104°F[3] (-20°C to 40°C)
SOC Relative Humidity	45% to 95%
Hail Safety Impact Velocity	1" hailstone (25mm) at 52mph (23m/s)
Fire Safety Classification	Class C
Safety & Rating Certifications	UL 1703, cUL, CEC
Limited Warranties	2 Years Workmanship / 20 Years Power Output

[1]STC: Cell Temp. 25°C, AM1.5, 1000W/m^2 [2]PTC: Ambient Temp. 20°C, AM1.5, 1000W/m^2, 1m/s Wind [3]Range defined as the monthly average low and high of the installation location

Dependence on Temperature

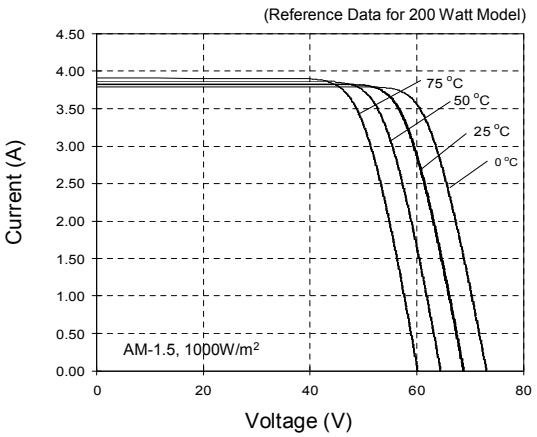

Dependence on Irradiance

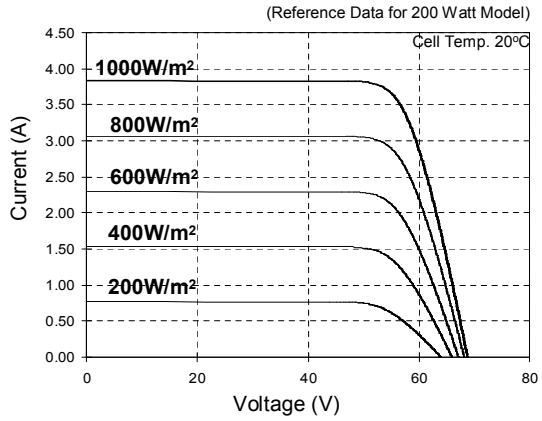

CAUTION! Read the operating instructions carefully before use of these products.

Dimensions

Unit: mm (Inches)

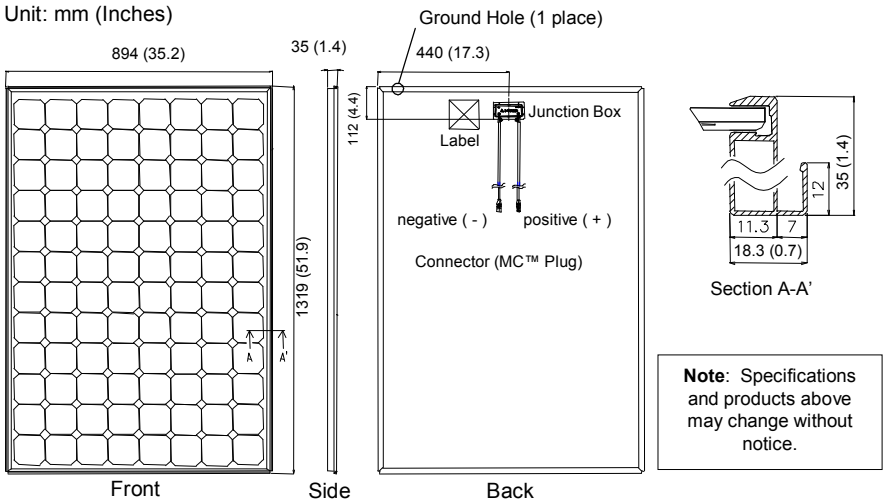

Note: Specifications and products above may change without notice.

Visit www.sanyo.com or contact our Authorized Representatives for more information:

Solar Cell Specifications

Manufacturer Contact:
Sanyo Energy USA Corp.
2055 Sanyo Ave
San Diego, CA 92154

Stock Number: HIP-205BA3

Module Area: 12.69 ft^2

Cost/Watt: ~$5.00

Categories

General
Home Automation
Yard & Garden
Weather
Cases
Boards & Kits->
Parts & Sensors
Cables & Connectors
Weather Toys
Clearance

Shopping Cart

0 items

Support The National Multiple Sclerosis Society

Support the fight against MS by teaming up with Hobby Boards. Click here to see how you can help.

Quick Find

Use keywords to find the product you are looking for.
Advanced Search

Notifications

Notify me of updates to 4 Channel Relay

Tell A Friend

Tell someone you know about this product.

Information

General Installation and Use
Links
Shipping & Returns
Privacy Notice
Conditions of Use
Contact Us

4 Channel Relay

$

[4R3-R1-A]

Click to

The four-channel relay is used to control up to four separate circuits. The relay acts as a glorified switch, turning the circuits on and off. The relay can be used for so many applications we couldn't possibly list them all, but examples include turning on and off a sprinkler system, automating a hot tub, or low-voltage lights.

This is a fully assembled and tested unit. The relay board requires supplemental power. Due to the current it draws, which is high for a 1-Wire circuit, it s powered locally and not over the CAT-5 cable. This device has RJ45 (standard network connectors, as well as screw terminals, for connecting to your 1-Wire network.

The relay can control loads of up to 3 amp and 250 volt AC.

Available Options:

Moisture Resistant Coating: No

Current Reviews: 2

Reviews

1 Add to

Additional Information:

Protective Coatings

Relay v3.2 Parts and Construction

Relay v3.2 Schematic

Related Products:

1-Wire Serial Adaptor
$28.00

4 Channel Relay Board
$17.00

1-Wire US
Adaptor

1-Wire USB Ada
$28.00

4 Channel Relay Kit
$35.75

Categories

General
Home Automation
Yard & Garden
Weather
Cases
Boards & Kits->
Parts & Sensors
Cables & Connectors
Weather Toys
Clearance

MPXA4115A

[MPXA4115A-P]

$

MPXA4115 Motorola Pressure Sensor

Click to

Shopping Cart

0 items

Reviews

1 Add to

Related Products:

Barometer
$60.00

Barometer Kit
$50.00

Barometer Bo
$8.00

Quick Find

Use keywords to find the product you are looking for.
Advanced Search

Notifications

Notify me of updates to MPXA4115A

Tell A Friend

Tell someone you know about this product.

Information

General Installation and Use
Links
Shipping & Returns
Privacy Notice
Conditions of Use
Contact Us

Friday 03 August, 2007

ENTTEC
Entertainment Technology

Data Sheet

DMX USB PRO

GENERAL INFORMATION

"A tool, not a toy". Born of the Open DMX USB, the DMX USB Pro represents a significantly more robust way to control lights from your computer, It's light-weight, portable and ready for professional applications. It can be used for output, controlling your lights, or as input to allow DMX data from another source to interact with various programs on your PC, On-board chips handle timing and signal processing, so you get a clean signal no matter what your PC's processor is up to.

APPLICATIONS

- TRADE SHOWS
- PROFESSIONAL, COMMUNITY OR ACADEMIC THEATRE
- DJS
- TELEVISION PRODUCTION
- AV PRODUCTION COMPANIES

FEATURES

- Lightweight and portable
- Control up to 512 channels (software permitting)
- LED indicator to show proper function
- Includes USB cable and driver CD.
- Works with many commercial, shareware, and freeware programs such as Capture, Arkaos, LightFactory (see website for more)

ACCESSORIES

Also available as part of the LightFactory Starter Kit Pro, with a 36 channel license of LightFactory. See the Enttec website for details

ORDERING INFORMATION

Part Number	Description
#70304	DMX USB Pro

OPTIONS

Part Number	Description
#70029	3-pin to 5-pin Adapter

SPARE PARTS

Part Number	Description
#79110	Replacement USB Cable

GENERAL SPECIFICATIONS

Power Requirements	300mA supplied by USB
Weight	0.66 LBS / 0.3 KG
Shipped Weight	0.88 LBS / 0.4 KG
Width	2.27” / 57.5MM
Height	1.58” / 40MM
Depth	3.03” / 77MM
Operating Environment	0°-50°C in non-condensing environment

ENTTEC Main HQ
P.O. Box 282
Kew, Vic 3101
Australia
+61 3 9819 2433 Tel
+61 3 9819 2733 Fax

ENTTEC USA
SHIPPING AND BILLING
500-A Bynum Road
Forest Hill, MD

ENTTEC USA
SALES AND INFO
sales@enttec.com
888 454-5922 Tel.
888 454-5922 Fax

Data Sheet

FUNCTIONAL SPECIFICATIONS

- USB port works with USB 1.1 or 2.0
- DMX Input - 5 Pin XLR (use optional)
- DMX Output - 5 Pin XLR (will be passive throughput if input is active)
- 1500V isolation between data & power lines to protect your computer from surges
- Micro processor enabled
- RDM enabled (though more limited in capabilities than the RDM USB Pro)
- Internal frame buffering
- Drivers for Windows, OSX and Linux
- Universe & user config EEPROM
- Refresh Rate configurable from 1 to 40Hz with a full 512 channel frame
- Break configurable from 96uS to 1.3mS
- MaB configurable from 10.6uS to 1.3mS
- Upgradeable firmware

Technical Illustration

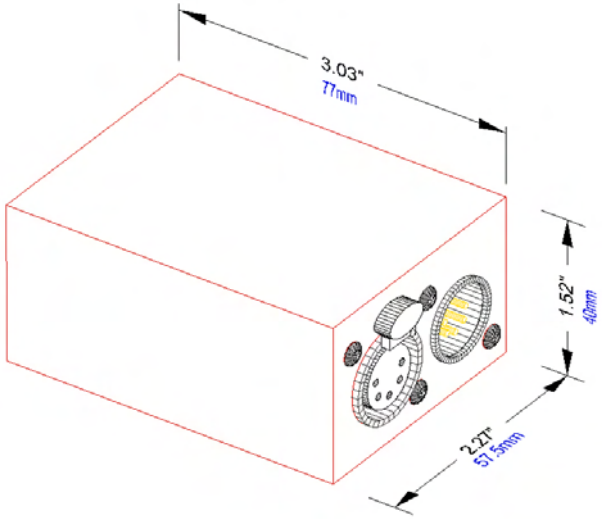

Wiring Diagram (Riser)

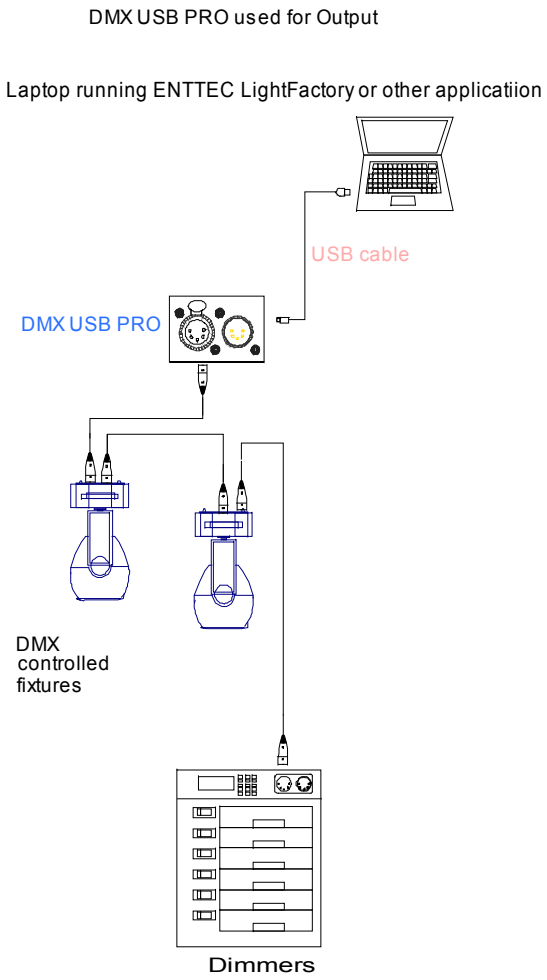

See other Riser Diagrams, Plates 70304-1 through 70304-2

ENTTEC Main HQ
P.O. Box 282
Kew, Vic 3101
Australia
+61 3 9819 2433 Tel
+61 3 9819 2733 Fax

ENTTEC USA
SHIPPING AND BILLING
500-A Bynum Road
Forest Hill, MD

ENTTEC USA
SALES AND INFO
sales@enttec.com
888 454-5922 Tel.
888 454-5922 Fax

2007/08/03

MPX4115A — FREESCALE SEMICONDUCTOR — Pressure Sensors IC

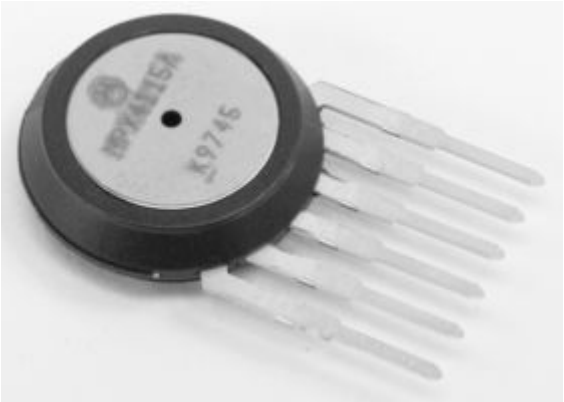

Image is for illustrative purposes only.
Please refer to product description

Manufacturer: FREESCALE SEMICONDUCTOR

Newark Part Number: 07F9894

Manufacturer Part No: MPX4115A

RoHS Compliance : **Yes**

Description

- Pressure Sensors IC
- IC Function:Pressure Sensors IC
- Package/Case:867 - Basic Element
- Full Scale Span:4.59V
- Leaded Process Compatible:Yes
- Operating Pressure Max:115kPa
- Over Pressure:400kPa
- Peak Reflow Compatible (260 C):No RoHS Compliant: Yes

Availability

Availability: 1027

Price For: 1 Each

Minimum Order Quantity: 1

Order Multiple Quantity: 1

Price: $18.27

Qty

Price

Qty	List Price	Promo Price
1 - 24	$18.41	$18.27
25 - 99	$14.46	$14.34
100 - 999	$13.63	$13.50
1000 +	$12.59	$12.48

PRODUCT INFORMATION

Catalog Page:

230 / 124

87 / 123

454 / 122

RoHS Certificate of Compliance

Datasheet

Get ADOBE® READER®

Web Site Support:
1.800.NEWARK.T (1.800.639.2758)

Contact Newark:
1.800.4.NEWARK (1.800.463.9275)

Categories

General
Home Automation
Yard & Garden
Weather
Cases
Boards & Kits->
Boards
Kits
Parts & Sensors
Cables & Connectors
Weather Toys
Clearance

Shopping Cart

0 items

Quick Find

Use keywords to find the product you are looking for.
Advanced Search

Notifications

Notify me of updates to Humidity/Temp/Solar Kit

Tell A Friend

Tell someone you know about this product.

Information

General Installation and Use
Links
Shipping & Returns
Privacy Notice
Conditions of Use
Contact Us

Friday 03 August, 2007

Humidity/Temp/Solar Kit

$

[HTS3-R1-K]

Click to

This is the circuit board plus all parts needed for you to assemble the Humidity/Temperature/Solar Sensor. It is the board for the Humidity/Temperature/Solar sensor, and includes all of the parts needed to monitor all three environmental variables. This board primarily uses surface mount components. Please see the product description of the fully assembled Humidity/Temperature/Solar device for more information.

Our Humidity/Temperature/Solar kit uses the DS2438Z and the DS18S20 1-Wire chips 4000 humidity sensor, and the CLD140 photodiode.

Cases are available. See Related Products Below

Reviews

1 Add to

Additional Information:

Humidity-Temp-Solar Dimensions

Humidity-Temp-Solar v3.1 Parts and Construction

Protective Coatings

Humidity-Temp-Solar v3.1 Schematic

Related Products:

Solar Radiation Case
$7.00

1-Wire Serial Adaptor
$28.00

1-Wire USB Ada
$28.00

Humidity/Temp/Solar
$55.75

Humidity/Temp/Solar Board
$7.00

USB-UIRT Home

NEW* Shipping within the UK now available (see order page for details) *NEW

! **USB-UIRT Home**

Welcome to the USB-UIRT home page!

Here you'll find information about the USB-UIRT as well as links to support files, downloads, as well as a USB-UIRT discussion forum.

WHAT IS THE USB-UIRT?

The USB-UIRT is a USB version of the now-notorious UIRT (stands for **U**niversal **I**nfrared **R**eceiver **T**ransmitter). The USB version offers a simple plug-and-play solution without having to deal with some of the hassles of the classic serial-port (RS-232) version.

WHAT DOES THE USB-UIRT DO?

The USB-UIRT, along with Automation Software such as Girder, allows your PC to both Receive and Transmit infrared signals -- exactly like those used by the collection of remote controls you've acquired for your TV, VCR, Audio System, etc. The USB-UIRT can:

- Receive signals from the remote controls you already have (allowing your PC to perform actions when the 'Play' button is pressed on your VCR remote, for example)

- 'Learn' from remotes you already have and *Transmit* a duplicate of these signals from your PC

! **News**

USB-UIRT is now available for order!

Announcing the introduction of the USB-UIRT -- a fully-assembled, plug-n-play version of the popular UIRT.
More >>

Now Taking Orders!
You can now place orders for the USB-UIRT by clicking here.

(for example, your PC could automatically turn ON your VCR and tune it to channel 3)

- Use codes available from the Web for other remotes (such as the Philips Pronto) to control all of your equipment with Remote (IR) receivers (including special 'discrete' remote codes your brand-name remote doesn't include!). For example, the USB-UIRT could transmit the discrete 'Input 3' code to your TV to directly switch it to input 3, rather than cycling through all of the inputs.

HOW DOES THE USB-UIRT WORK?

The USB-UIRT contains a small micro-controller which is capable of 'listening' for Infrared codes which are transmitted from most remote controls. When IR signals are detected, the USB-UIRT interprets these signals, decodes them, and sends them to your PC via a USB connection. Automation Software such as Girder can be programmed to respond to these codes. In addition, software on the PC can send IR codes to the USB-UIRT to be *transmitted*. The USB-UIRT's microcontroller will translate these codes to an Infrared stream and transmit them using built-in IR emitters or a connected IR extension.

More >>

Home and Building Automation

HUMIDITY SENSOR BOBCAT™ Specifications

The Humidity Bobcat™ is a single point module providing relative humidity readings from 5% to 95% RH.

Size: 2.5"L x 1.35"W x 0.6"H

Power: 9-12 Volts AC or DC, 30 mA.

I/O: ADNET: 2 Screw Terminals*
Power: 2 Screw Terminals*
*(up to 14 AWG)

Part #: BOBCAT/HUM

Description	Manual	FAQS

Home and Building Automation

FAQS
MANUALS
DISTRIBUTORS
PRODUCTS
CUSTOMER SUPPORT
CONTACT US
OTHER LINKS

LIGHT SENSOR BOBCAT™ Specifications

The Light Sensor Bobcat™ is a single point module for detecting dramatic light level changes from 0 to 10 LUX.

Size: 2.5"L x 1.35"W x 0.6"H

Power: 9-12 Volts AC or DC, 30 mA.

I/O: ADNET: 2 Screw Terminals*
Power: 2 Screw Terminals*
*(up to 14 AWG)

Part #: BOBCAT/LIGHT

Description	Manual	FAQS

1 Overview of the Ocelot

The Ocelot is Applied Digital Inc's (ADI) second generation of the original CPUXA home automation (HA) controller. The Ocelot features a complete programming language allowing the user to execute tasks based on complex "If/Then" logic. Tasks can be activated by various input and output (I/O) sources, or programmed to execute automatically based on time or date criteria, or by any combination of these. An external computer can be connected to the Ocelot and information exchanged in real time between the two, allowing expanded capabilities like web access and user created software applications to interface to the home automation system. Finally, the Ocelot supports an ever growing list of expansion modules to add capabilities like reading digital and analog inputs, activate relays, measure temperatures, humidity, etc. and even have slave Leopard or Ocelot controllers to facilitate access to it's resources. The Leopard (and Leopard II) is a controller with the same capabilities as the Ocelot but with the addition of a programmable touch screen that can trigger events and display information under program control.

1.1 Hardware Description

The Ocelot consists of a main central processing unit that holds the user program in non-volatile memory using flash-RAM technology. It has built in I/O interfaces for:

- X-10 devices. X-10 is a powerline communications protocol supported by multiple vendors of HA equipment.
- Infrared control. There is an Infrared (IR) receiver located along the top edge of the unit and an IR emitter can be connected to the I/O connector or jack to enable the controller to transmit IR commands. An external IR receiver can also be used with the Ocelot (with the built-in IR receiver disabled).
- Serial port. The RS-232 serial port is used to load programs and other data into the Ocelot and also serves as an interface to any external computer program that supports the Ocelot as an interface to a HA system.
- RS-485 expansion bus. The bus is used by the proprietary Adnet protocol to allow the Ocelot to communicate with the various expansion modules and slave controllers available from ADI. Like all other ADI controllers, the Ocelot can be configured as either a master or slave controller.

1.2 Hardware Specifications

Size: 6.5"L x 3.75"W x 1.38"H

I/O: RS232 - DBSF w/6' Cable
X-10 -RJ11 w/6' Cable
ADNET: 2 Screw Terminals*
Power: 2 Screw Terminals*
*(up to 14 AWG)
Infra-Red In - Stereo 3.5mm Jack
Infra-Red Out - Mono 3.5mm Jack

Each Unit Includes: User's Guide and C-Max 2.0 Control Wizard Software
Comms Cable for OCELOT - PC communication
25' cable for TW523 communication (TW523 not included)
9-12V @ 1A power supply

1.3 Software Specifications

Ladder Logic programming model
4096 Program Lines
128 Variables (integer, 0 to 65535)

64 Timers (1 second resolution, 1 to 65535 seconds)
1024 IR codes
128 ASCII messages
15 Alphanumeric Pager Messages
256 Screen objects
200 Screen Icons (max)

1.4 Installing the Ocelot

1.4.1 Hardware Installation

The Ocelot's modular style case allows it to be installed practically anywhere. Be careful when choosing your mounting location to avoid high voltage lines as they may cause problems with the electronics and communication of the equipment. Never bundle the communication or low voltage wiring with high voltage wiring as this may cause communication problems. Another consideration when choosing a mounting location is the necessity of getting the 12-volt, I/O and communications wiring to the Ocelot. This might mean planning ahead to avoid cable routing obstacles such as studs and horizontal braces in a wall. Cables should always run from the Ocelot to an easily accessible area. Also consider the accessibility of the built-in Infrared receiver if you will be using it to learn Infrared codes or to send Infrared commands to the Ocelot to control it.

Fig. 1 shows the physical location of the various connectors and jacks for the Ocelot. The screw terminals for the power and communications bus are actually on a plug in connector that can be removed (by pulling it out) to make connections easier to perform.

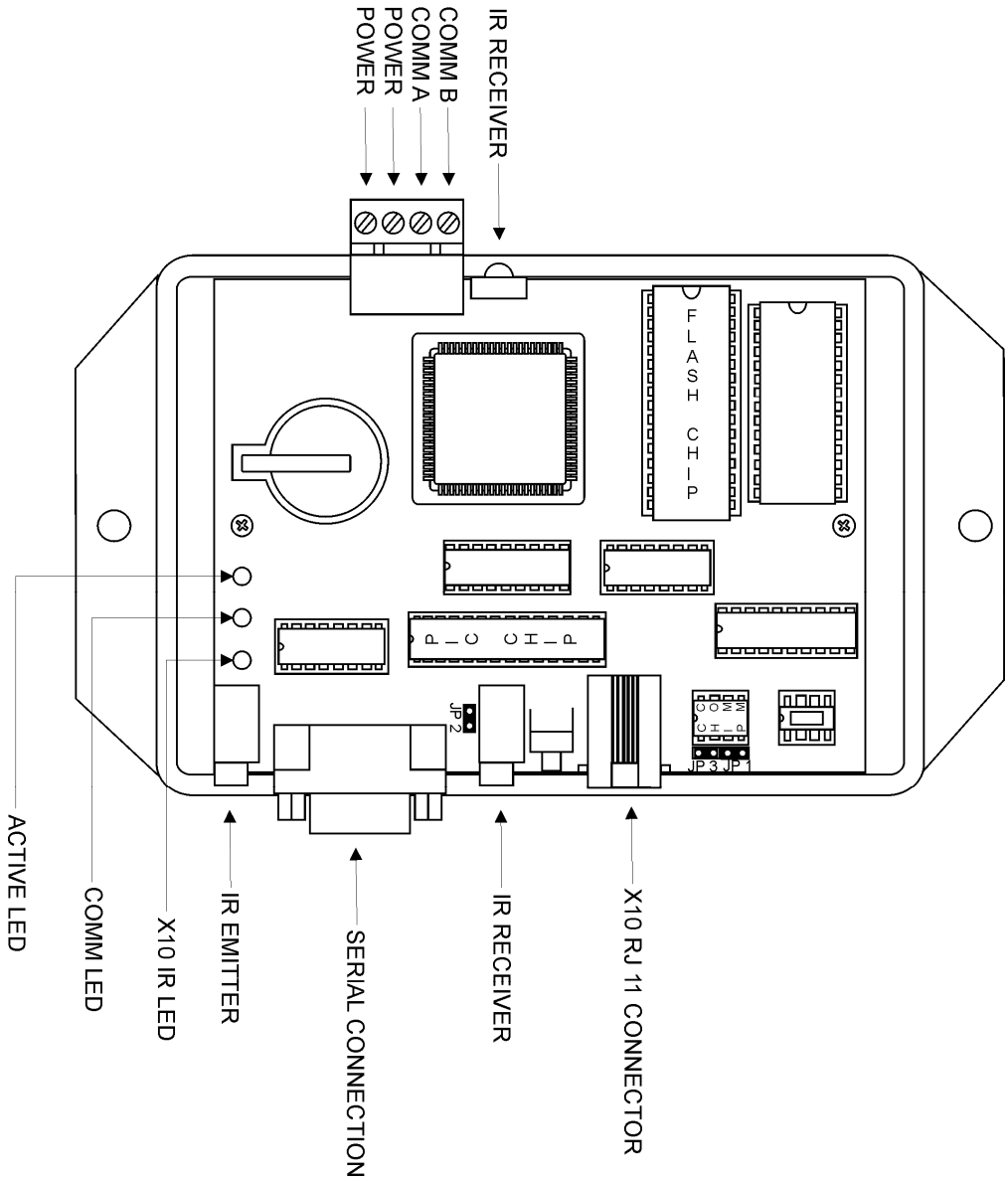
IR RECEIVER
COMM B
COMM A
POWER
POWER
FLASH CHIP
PLC CHIP
JP2
COMM CHIP
JP3 JP1
X10 RJ 11 CONNECTOR
IR RECEIVER
SERIAL CONNECTION
IR EMITTER
X10 IR LED
COMM LED
ACTIVE LED

Fig. 1

1.4.1.1 Power

The Ocelot requires either a 12-volt AC or DC, 200mA power supply (included with unit). The 12-volt power source is connected to the 4-position terminal plug at the top of the case. Make sure you correctly identify the power and bus connections before applying power. Polarity of the power wires is not important for this unit.

1.4.1.2 Connections for the built-in and expansion I/O interfaces

X-10

The RJ11 (telephone type) jack along the bottom is for the X-10 communications. Connect the supplied RJ11 cable to this jack, and then plug the other end into a PSC05 or TW523 X-10 interface (not included). Note that the supplied cable is wired pin to pin, and does not "roll over" the wires from one end to the other like most telephone cables. Be careful in observing this if you decide to use an extension or another cable for this connection.

Infrared

The IR out jack is located at the bottom left of the Ocelot. It is for a standard 5v mini IR emitter. To the right of the serial connector is the IR in jack. This can be used with the optional IR receiver dongle as an alternate way to receive IR commands (instead of the built-in IR receiver).

Serial port

This is a standard DB-9 connector. Use the supplied serial cable to connect this port to the PC that will be running C-Max to program the Ocelot. Note for alternate or extension wiring: only 3 wires are needed in the serial cable. These correspond to pins 2,3 and 5.

RS-485 bus (Adnet)

On the same connector as the power input. These terminals are used to connect to one or more of our Adicon 2500 modules or slaves. Connect Comm A to Comm A and Comm B to Comm B in a daisy chain manner.

1.5 Installing the C-Max Utility

Now that your hardware is installed, you will need to install and configure the C-Max utility software. The C-Max program serves as a program editor, event viewing tool, and many other functions. In order to program and use the Ocelot you will first need to install C-Max on your personal computer. All specific examples given in this document are given using C-Max version 2.00e which was the current version as of this writing. Your computer needs to be running Microsoft Windows 95 or later to use C-Max.

1.5.1 Installing from a CD

Your Ocelot was packaged with a CD containing the C-Max utility. The installation from a CD is very similar to installing most other Microsoft Windows applications. Simply insert the CD in your drive and the installation program should be launched automatically. If the installation does not start by itself, browse your CD drive and look for a file named "Setup.exe" in its main directory and then open the file. You will then be prompted through the installation process. Follow the instructions in the C-Max Installation paragraph below.

1.5.2 Installing from a compressed file

If you obtained C-Max from a source such as the Internet, it will come as a self-extracting compressed file. Simply execute to file as a program and the decompression will be automatically started. The installation program will suggest that the files be written to the "C:\temp" directory but any other temporary installation directory may be used and specifying a non-existent directory will cause the directory to be created. Once that is finished, you will need to browse to the temporary directory that was used and run the "Setup.exe" file to launch the installation of C-Max. You will be prompted through the installation process. Follow the instructions in the C-Max Installation paragraph below.

1.5.3 C-Max Installation

The default installation path will usually be "C:\Program Files\ADI\Adicon2500". Unless there is a need to install it in another directory, it is easiest to leave the default path as it is.

The installation program will overwrite any existing installation of C-Max. Any program files you may already have will be safely preserved. If for whatever reason you wish to keep a copy of your previous C-Max version and any programs or other files created by it (because once modified with version 2.0, they will no longer be backward compatible), then copy the entire contents of the "C:\Program Files\ADI\Adicon2500" directory (or wherever you had installed it) to another directory before installing C-Max 2.0.

Note that some things like the installation path are saved in the Windows Registry, so if you decide to install the new version in a different directory then an older one, the Registry settings will now point to the new directory. This can cause unexpected behavior if you then attempt to use the old version. For example, starting up the old version and reloading the executive will locate the flash512.bin file using the path of the new version (ie: you will be reloading the new executive version instead of the old one…).

1.5.4 Configuring C-Max

Once C-Max is installed on your personal computer, there a few settings that must be finalized before you can use it. Start the C-Max utility by clicking on Start → Programs → C-Max Control. You can also create a shortcut for your desktop by creating a new shortcut to the "Cpuxa.exe" file in the installation directory. Once started you will get a screen similar to the following (fig. 2)

Home and Building Automation

TEMPERATURE SENSOR BOBCAT™

The Temperature Bobcats™ are a single point module which provide temperature readings. The Temperature Bobcat is available in both Fahrenheit and Celsius. The Fahrenheit sensor has a range of -20ºF to 170ºF. The Celsius sensor has a range of -18ºC to 77ºC.

Specifications	Manual	FAQS

Home and Building Automation

CONTACT SENSOR BOBCAT™ Specifications

The Contact Sensor Bobcat™ is a single point module for detecting contact closures such as relays or switches.

Size: 2.5"L x 1.35"W x 0.6"H18" Sensor Cable

Power: 9-12 Volts AC or DC, 30 mA.

I/O: ADNET: 2 Screw Terminals
Power: 2 Screw Terminals*
*(up to 14 AWG)

Part #: BOBCAT/CONTACT

Description	Manual	FAQS

Dual Sensor, 120VAC with Battery Backup Smoke Alarm

• PI2000 • Item Number 442006

Dual Sensor
Contains both a photoelectric and ionization sensor, providing the best protection for your home.

Hush® Feature
Temporarily silences nuisance alarms.

Battery Backup
Provides protection even during a power outage.

Red LED
Flashes every 30-40 seconds to indicate that the smoke alarm is operating properly.

Test/Reset Button
Tests unit's electronic circuitry and horn.

Description

The Kidde PI2000 is a 120VAC, wire-in smoke alarm with 9V battery backup. This smoke alarm combines both photoelectric and an ionization sensors in a single alarm, providing the best overall protection. This smoke alarm functions as a stand alone unit or in an interconnected system. The Kidde PI2000 features Hush®, allowing you to quickly silence nuisance alarms and also includes a tamper resist features that deters tampering and theft. The PI2000 includes a quick connect power harness that allows for quick and easy installation.

Consumer Benefits

The Kidde PI2000, 120VAC, wire-in smoke alarm with 9V battery back up provides continuous protection against smoke and fire hazards, even during power outages. The combination of ionization and photoelectric sensors offer the best protection against both fast flaming and slow smoldering fires. The Kidde PI2000 interconnects with up to 24 Kidde devices including smoke alarms, CO alarms, heat detectors, strobe lights and relay modules on one wiring system. This unit also includes flashing LEDs to signal the alarm is functioning properly, a low battery warning and a loud 85dB alarm. The Kidde PI2000 is UL Listed and includes a 5-year limited warranty.

Features and Benefits

- **Ionization Sensor** – Protects best against fast flaming fires.
- **Photoelectric Sensor** – Protects best against slow smoldering fires.
- **Interconnect** – Interconnects with up to 24 Kidde devices on one wiring network.
- **Battery Backup (9V battery included)** – Provides continuous protection even during power outages.
- **Tamper Resistant** – Deters from tampering or theft.
- **Hush® Feature** – Temporarily silences nuisance alarms.
- **Red LED** – Flashes every 30-40 seconds to indicate that the smoke alarm is operating properly.
- **Test/Reset Button** – Tests smoke alarm circuitry and horn.
- **Alarm Memory** – Indicates the originating alarm in an interconnected system.

5 YEAR LIMITED WARRANTY

UL LISTED

Dual Sensor, 120VAC with Battery Backup Smoke Alarm

Unit Number PI2000
Item Number 442006

Architectural and Engineering Specifications

The smoke alarm shall be Kidde Unit PI2000 or approved equal. It shall be powered by a 120VAC, 60Hz, 80mA source along with a 9V battery backup. The unit shall incorporate both an ionization smoke sensor and a photoelectric smoke sensor with a nominal alarm sensitivity of 1.99%/ft. The temperature operating range shall be between 40˚F and 100˚F (4˚C and 38˚C) and the humidity operating range shall be 5% - 95% relative humidity.

The smoke alarm can be installed on any standard single gang electrical box, up to a 4" octagon junction box. The electrical connection (to the alarm) shall be made with a plug-in connector. A maximum of 24 Kidde devices can be interconnected in a multiple station arrangement. The interconnect system must not exceed the NFPA (National Fire Protection Association) limit of 18 initiation devices, of which 12 can be smoke alarms. With 18 initiation devices (smoke, heat, CO, etc.) interconnected, it is still possible to interconnect 6 strobe lights and or relay modules. The unit shall provide optional tamper resistance that deters removal of the unit from the wall or ceiling.

The alarm shall include a test button that will electronically simulate the presence of smoke and cause the unit to go into alarm. This sequence tests the unit's electronics, battery and horn to ensure proper operation.

The unit shall include a piezoelectric horn that is rated at 85 decibels at 10 feet. In a smoke incident, the horn will sound in the repetitive manner – three (3) beeps, a pause, three (3) beeps, a pause.

The unit shall include the Hush® feature that silences the unit. By pressing the Hush" button, it will desensitize the unit for approximately 7 minutes if a nuisance condition occurs. The alarm will chirp every 30-40 seconds during this time and will automatically reset after approximately 7 minutes and sound the alarm if particles of combustion are still present. The Hush® feature shall be overridden and the unit will alarm if the smoke is too dense.

The unit shall also include a low battery warning utilizing a brief alarm chirp every 30-40 seconds for a minimum of seven (7) days.
The alarm will utilize a red LED that shall flash once every 30-40 seconds to indicate the alarm is receiving power.

The unit shall at a minimum meet the requirements of UL2034, UL217, NFPA72, (chapter 11, 2002 edition) The State of California Fire Marshall, NFPA101 (One and two family dwellings) Federal Housing Authority (FHA), Housing and Urban Development (HUD). It shall also include a 5-year manufacturer's limited warranty.

Installation of Smoke Alarm

The smoke alarm should be installed to comply with all local codes having jurisdiction in your area, Article 760 of the National Electric Code, and NFPA 72. Make certain all alarms are wired to a single, continuous (non-switched) power line, which is not protected by a ground fault interrupter. A maximum of 1000 ft. of wire can be used in the interconnect system. Use standard UL listed household wire (18 gauge or larger as required by local codes).

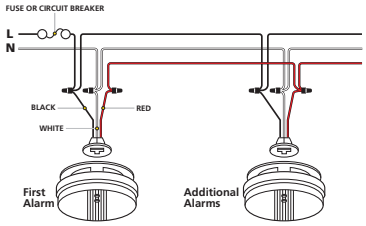

Technical Specifications

Unit Number:	PI2000
UPC Number:	0-25417-12000-4
Power Source:	120VAC with 9V battery backup
Sensor:	Dual Ionization and Photoelectric
Audio Alarm:	85dB at 10ft
Temperature Range:	40˚F (4.4˚C) to 100˚F (37.8˚C)
Humidity Range:	5%-95% relative humidity (RH)
Size:	5.75" in diameter x 1.8" depth
Weight:	1lb
Interconnects:	Up to 24 Kidde devices (of which 18 can be initiating)
LED:	Red, normal operation Green - AC power present
Warranty:	5 year limited

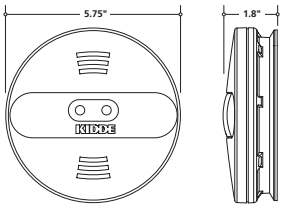

Ordering Information

UPC: 0-25417-12000-4

Part Number	I 2 of 5	Pack Quantity	Dimensions (w x d x h inches)	Weight	Case/ Skid	Layers/ Skid	Skid Weight
442006**	N/A	Individual	5.75 x 1.5 x 5.75	1lb	N/A	N/A	N/A
442006-006	200 25417 12000 8	Master Pack (6 units)	6 x 12.5 x 6	6.5lbs	105	5	682.5lbs

***Not for sale by individual unit*

UNIT

MASTER PACK

1394 South Third Street, Mebane NC 27302
1-800-880-6788 • www.kiddeus.com

Distributed by:

Residential Series

Living Area Fire Extinguisher (Primary Protection)

Part number 21005770 | **Living area use** | **Single use**

UL Rated 2-A:10-B:C

Meets NFPA recommendations for primary home protection

Description

Fights fires common to the home living areas such as wood, fabrics, furnishings, and drapes.

Meets NFPA recommendations for primary home protection and has a 10 year warranty.

Features bilingual nameplate and carton.

White finish.

Features

- Pressure gauge allows for immediate pressure status check
- Easy-to-pull safety pin
- Rust and impact resistant nylon handle
- 4 lb. of fire extinguishing agent (Average)
- 10 year limited warranty
- UL approved wall hanger
- Powder coated cylinder for corrosion protection

UPC: 0-47871-05770-2

For use on the following types of fire:

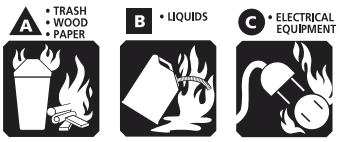

At a Glance

- Model FX210R
- Multipurpose Dry Chemical
- UL listed
- UL rated 2-A:10-B:C
- Supplied with wall hanger
- Monoammonium Phosphate
- 10 year limited warranty

Product Specification

Net agent weight (Average)	4.0 lb.
Unit weight (Average)	7.13 lb.
Diameter	4.5 inches
Height	16.07 inches
Discharge time	13-15 seconds
Discharge range	12-18 feet
Operating pressure	195 psi
Cylinder	Seamless aluminum
Valve, handle, lever	Nylon
Wall hanger	UL Listed

Packaging Options

Master Pack (2)	21005770
Master Pack (4)	21005771
Cut Case (8)	21005772

MASTER PACK

MASTER PACK

CUT CASE

MATERIAL SAFETY DATA SHEET

Kidde 55 Multi-Purpose Dry Chemical (Fire Extinguishing Agent)

1. PRODUCT AND COMPANY IDENTIFICATION

Product Name	Kidde 55 Multi –Purpose Dry Chemical (Fire Extinguishing Agent)
Other Trade Names	ABC, Ammonium Phosphate, Monoammonium Phosphate
Manufacturer/Supplier	Kidde – Residential and Commercial
Address	1394 S. Third Street Mebane, NC 27302 USA
Phone Number	(919) 563-5911 (919) 304-8200
Chemtrec Number (for emergencies only)	(800) 424-9300 (703) 527-3887 (International)
Revision Date:	
MSDS Date:	January 15, 2007

This MSDS has been compiled in accordance with - EC Directive 91/155/EC - OSHA's Hazcom Standard (29 CFR 1910.1200)

2. COMPOSITION/INFORMATION ON THE COMPONENTS

Component Name	CAS#/Codes	Concentration	R Phrases	EU Classification
Monoammonium Phosphate	7722-76-1 EC#2317645	55 - 65%	None	None
Ammonium Sulfate	7783-20-2 EC#2319841	30 - 40%	None	None
Mica	12001-26-2	1 - 4%	None	None
Clay	8031-18-3	<2%	None	None
Amorphous Silica	7631-86-9 EC#2315454	<2%	None	None
Dye	NA	<0.1%	None	None

3. HAZARD IDENTIFICATION

EU Main Hazards
Non Hazardous Powder

Routes of Entry
- Eye contact - Inhalation - Skin contact

Carcinogenic Status
See Section 11 - Toxicity

Target Organs
- Respiratory System - Skin - Eye

Health Effects - Eyes
Contact for short periods of time may cause irritation.

Health Effects - Skin
Contact may cause mild irritation.

3. HAZARD IDENTIFICATION

Health Effects - Ingestion
Ingestion is not an expected route of exposure.

Health Effects - Inhalation
May irritate the respiratory tract. May cause transient cough and shortness of breath.

4. FIRST AID MEASURES

Eyes
Immediately flood the eye with plenty of water of warm water for at least 15 minutes, holding the eye open. Obtain medical attention if soreness or redness persists.

Skin
Wash affected area with soap and water. Obtain medical attention if irritation persists.

Ingestion
Dilute by drinking large quantities of water and obtain medical attention.

Inhalation
Move victim to fresh air. Obtain medical attention immediately for any breathing difficulty.

Advice to Physicians
Treat symptomatically.

5. FIRE FIGHTING MEASURES

Extinguishing Media
This preparation is used as an extinguishing agent and therefore is not a problem when trying to control a blaze. Use extinguishing agent appropriate to other materials involved. Keep pressurized extinguishers and surroundings cool with water spray as they may rupture or burst in the heat of a fire.

Unusual Fire and Explosion Hazards
Pressurized containers may explode in heat of fire.

Protective Equipment for Fire-Fighting
Wear full protective clothing and self-contained breathing apparatus as appropriate for specific fire conditions.

6. ACCIDENTAL RELEASE MEASURES

Sweep up or vacuum. Prevent skin and eye contact. Wear appropriate protective equipment.

7. HANDLING AND STORAGE

Pressurized extinguishers should be properly stored and secured to prevent falling or being knocked over. Do not drag, slide or roll extinguishers. Do not drop extinguishers or permit them to strike against each other. Never apply flame or localized heat directly to any part of the extinguisher or plastic container. Store pressurized extinguishers and plastic containers away from high heat sources. Storage area should be: - cool - dry - well ventilated - under cover - out of direct sunlight

8. EXPOSURE CONTROLS/PERSONAL PROTECTION

Occupational Exposure Standards
Occupational exposure limits are listed below, if they exist.
Mica
ACGIH TLV: 3 mg/m3 TWA, measured as respirable fraction of the aerosol.
OSHA PEL: 20 mppcf, <1% crystalline silica
Nuisance Dust Limit
OSHA PEL: 50 mppcf or 15 mg/m3 TWA, total dust
15 mppcf or 5 mg/m3 TWA, respirable fraction

Engineering Control Measures
Use with adequate ventilation. There should be local procedures for the selection, training, inspection and maintenance of this equipment. When used in large volumes, use local exhaust ventilation.

Respiratory Protection
Not normally required. Use dust mask where dustiness is prevalent, or TLV is exceeded.

Hand Protection
Not normally needed when used as a portable fire extinguisher. Use gloves if irritation occurs.

Eye Protection
Chemical goggles or safety glasses with side shields.

Body Protection
Normal work wear.

9. PHYSICAL AND CHEMICAL PROPERTIES

Physical State	Powder
Color	Pale Yellow
Odor	Odorless
Specific Gravity	Not available
Boiling Range/Point (°C/F)	Not applicable
Flash Point (PMCC) (°C/F)	Not Flammable
Solubility in Water	Not applicable
Vapor Density (Air = 1)	Heavier than air.
Vapor Pressure	Not applicable
Evaporation Rate	Not applicable

10. STABILITY AND REACTIVITY

Stability
Stable under normal conditions.

Conditions to Avoid
- Heat - High temperatures - Exposure to direct sunlight

Materials to Avoid
- Strong oxidizing agents - strong acids - sodium hypochlorite

10. STABILITY AND REACTIVITY

Hazardous Polymerization
Will not occur.

Hazardous Decomposition Products
- oxides of carbon - ammonia – oxides of phosphorus – nitrogen oxides

11. TOXICOLOGICAL INFORMATION

Acute Toxicity
Low order of acute toxicity.

Chronic Toxicity/Carcinogenicity
This product is not expected to cause long term adverse health effects.

Mica and clay may contain small quantities of quartz (crystalline silica) as an impurity. Prolonged exposure to respirable crystalline silica dust at concentrations exceeding the occupational exposure limits may increase the risk of developing a disabling lung disease known as silicosis. IARC found limited evidence for pulmonary carcinogenicity of crystalline silica in humans.

Genotoxicity
This product is not expected to cause any mutagenic effects.

Reproductive/Developmental Toxicity
This product is not expected to cause adverse reproductive effects.

12. ECOLOGICAL INFORMATION

Mobility
No relevant studies identified.

Persistence/Degradability
No relevant studies identified.

Bio-accumulation
No relevant studies identified.

Ecotoxicity
No relevant studies identified.

13. DISPOSAL

Dispose of container in accordance with all applicable local and national regulations. Do not cut, puncture or weld on or near to the container. No harm to the environment is expected from this preparation.

14. TRANSPORT INFORMATION

DOT CFR 172.101 Data	Not regulated
UN Proper Shipping Name	Not regulated
UN Class	None
UN Number	None
UN Packaging Group	None

15. REGULATORY INFORMATION

EU Label Information

Classification and labelling have been performed according to EU directives 67/548/EEC and 99/45/EC including amendments.

EU Hazard Symbol and Indication of Danger.
This preparation is not classified as dangerous.

R phrases
None

S phrases
None.

US REGULATIONS (Federal, State) and INTERNATIONAL CHEMICAL REGISTRATION LAWS

TSCA Listing
This product contains ingredients that are listed on or exempt from listing on the EPA Toxic Substance Control Act Chemical Substance Inventory.

EINECS Listing
All ingredients in this product have not been verified for listing on the European Inventory of Existing Commercial Chemical Substances (EINECS) or the European List of New Chemical Substances (ELINCS).

DSL/NDSL (Canadian) Listing
All ingredients in this product are listed on the Domestic Substance List (DSL) or the Non-Domestic Substance List (NDSL) or are exempt from listing.

WHMIS Classification
D2B

This product was classified in accordance with the hazard criteria of the Canadian Controlled Products Regulations and the MSDS contains all the information required by these regulations.

MA Right To Know Law
All components have been checked for inclusion on the Massachusetts Substance List (MSL). Those components present at or above the de minimus concentration include: - Mica (12001-26-2) 1-4% - Amorphous Silica (7631-86-9) <2% - Ammonium Sulfate (7783-20-2) 30 - 40%

PA Right To Know Law
This product contains the following chemicals found on the Pennsylvania Hazardous Substance List: - Mica (12001-26-2) 1-4% - Amorphous Silica (7631-86-9) <2% - Ammonium Sulfate (7783-20-2)

30 - 40%

NJ Right To Know Law
This product contains the following chemicals found on the NJ Right To Know Hazardous Substance List: - Mica (12001-26-2) 1-4% - Amorphous Silica (7631-86-9) <2%

California Proposition 65
This product does not contain materials which the State of California has found to cause cancer, birth defects or other reproductive harm.

SARA Title III Sect. 302 (EHS)
This product does not contain any chemicals subject to SARA Title III Section 302.

SARA Title III Sect. 304
This product does not contain any chemicals subject to SARA Title III Section 304.

15. REGULATORY INFORMATION

SARA Title III Sect. 311/312 Categorization
- Immediate (Acute) Health Hazard

SARA Title III Sect. 313
This product does not contain any chemicals that are listed in Section 313 at or above de minimis concentrations.

16. OTHER INFORMATION

NFPA Ratings
NFPA Code for Health - 1
NFPA Code for Flammability - 0
NFPA Code for Reactivity - 0
NFPA Code for Special Hazards - None

HMIS Ratings
HMIS Code for Health - 1
HMIS Code for Flammability - 0
HMIS Code for Reactivity - 0
HMIS Code for Personal Protection - See Section 8

Abbreviations
N/A: Denotes no applicable information found or available
CAS#: Chemical Abstracts Service Number
ACGIH: American Conference of Governmental Industrial Hygienists
OSHA: Occupational Safety and Health Administration
TLV: Threshold Limit Value
PEL: Permissible Exposure Limit
STEL: Short Term Exposure Limit
NTP: National Toxicology Program
IARC: International Agency for Research on Cancer
R: Risk
S: Safety

Prepared By: EnviroNet LLC.

The information contained herein is based on data believed to be accurate. However, no representation, warranty, or guarantee is made to its accuracy, reliability or completeness. It is the user's responsibility to satisfy himself as to the suitability and completeness of such information for its own particular use. Badger Fire Protection assumes no responsibility for personal injury or property damage resulting from use, handling or from contact with this product.

Residential Series
Kitchen Fire Extinguisher (Secondary Protection)

Part Number 21005753 | **Kitchen use** | **Single use**

UL Rated 10-B:C

For use on the following types of fire:

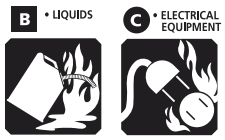

Description

The Kidde Kitchen Fire Extinguisher is suitable for fires common to the kitchen such as cooking grease and oils. The unit has a 10 year warranty.

Features bilingual nameplate and carton.

White finish.

At a Glance

- Model FX10K
- UL listed
- UL rated 10-B:C
- Supplied with wall hanger
- Sodium Bicarbonate
- 10 year limited warranty

Features

- Pressure gauge allows for immediate pressure status check
- Easy-to-pull safety pin
- Rust and impact resistant nylon handle
- 2.9 lb. of fire extinguishing agent (Average)
- 10 year limited warranty
- UL approved wall hanger
- Powder coated cylinder for corrosion protection

UPC: 0-47871-05753-5

Product Specification

Net agent weight (Average)	2.9 lb.
Unit weight (Average)	3.9 lb.
Diameter	3.25 inches
Height	13.75 inches
Discharge time	8-12 seconds
Discharge range	6-8 feet
Operating pressure	100 psi
Cylinder	Seamless aluminum
Valve, handle, lever	Nylon
Wall hanger	UL listed

Packaging Options

Master Pack (6)	21005753
Cut Case (12)	21005754

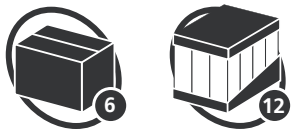

MASTER PACK CUT CASE

MATERIAL SAFETY DATA SHEET

Regular Dry Chemical
(Fire Extinguishing Agent)

1. PRODUCT AND COMPANY IDENTIFICATION

Product Name	Regular Dry Chemical (Fire Extinguishing Agent)
Other Trade Names	BC, SDC, Sodium Bicarbonate
Manufacturer/Supplier	Kidde – Residential and Commercial
Address	1394 S. Third Street Mebane, NC 27302 USA
Phone Number	(919) 563-5911 (919) 304-8200
Chemtrec Number (for emergencies only)	(800) 424-9300 (703) 527-3887 (International)
Revision Date:	
MSDS Date:	January 15, 2007

This MSDS has been compiled in accordance with - EC Directive 91/155/EC - OSHA's Hazcom Standard (29 CFR 1910.1200)

2. COMPOSITION/INFORMATION ON THE COMPONENTS

Component Name	CAS#/Codes	Concentration	R Phrases	EU Classification
Sodium Bicarbonate	144-55-8 EC#2056338	75 - 90%	None	None
Calcium Carbonate	471-34-1 EC#2074399	10 - 20%	None	None
Mica	12001-26-2	1- 4%	None	None
Clay	8031-18-3	<2%	None	None
Amorphous Silica	7631-86-9 EC#2315454	<2%	None	None

3. HAZARD IDENTIFICATION

EU Main Hazards
Non Hazardous Powder

Routes of Entry
- Eye contact - Inhalation - Skin contact

Carcinogenic Status
See Section 11 - Toxicity

Target Organs
- Respiratory System - Skin - Eye

Health Effects - Eyes
Contact for short periods of time may cause irritation.

Health Effects - Skin
Contact may cause mild irritation.

3. HAZARD IDENTIFICATION

Health Effects - Ingestion
Ingestion is not an expected route of exposure.

Health Effects - Inhalation
May irritate the respiratory tract. May cause transient cough and shortness of breath.

4. FIRST AID MEASURES

Eyes
Immediately flood the eye with plenty of water of warm water for at least 15 minutes, holding the eye open. Obtain medical attention if soreness or redness persists.

Skin
Wash affected area with soap and water. Obtain medical attention if irritation persists.

Ingestion
Dilute by drinking large quantities of water and obtain medical attention.

Inhalation
Move victim to fresh air. Obtain medical attention immediately for any breathing difficulty.

Advice to Physicians
Treat symptomatically.

5. FIRE FIGHTING MEASURES

Extinguishing Media
This preparation is used as an extinguishing agent and therefore is not a problem when trying to control a blaze. Use extinguishing agent appropriate to other materials involved. Keep pressurized extinguishers and surroundings cool with water spray as they may rupture or burst in the heat of a fire.

Unusual Fire and Explosion Hazards
Pressurized containers may explode in heat of fire.

Protective Equipment for Fire-Fighting
Wear full protective clothing and self-contained breathing apparatus as appropriate for specific fire conditions.

6. ACCIDENTAL RELEASE MEASURES

Sweep up or vacuum. Prevent skin and eye contact. Wear appropriate protective equipment.

7. HANDLING AND STORAGE

Pressurized extinguishers should be properly stored and secured to prevent falling or being knocked over. Do not drag, slide or roll extinguishers. Do not drop extinguishers or permit them to strike against each other. Never apply flame or localized heat directly to any part of the extinguisher or plastic container. Store pressurized extinguishers and plastic containers away from high heat sources. Storage area should be: - cool - dry - well ventilated - under cover - out of direct sunlight

8. EXPOSURE CONTROLS/PERSONAL PROTECTION

Occupational Exposure Standards
Occupational exposure limits are listed below, if they exist.
Mica
ACGIH TLV: 3 mg/m3 TWA, measured as respirable fraction of the aerosol.
OSHA PEL: 20 mppcf, <1% crystalline silica
Calcium Carbonate
OSHA PEL: 15 mg/m3 TWA, total dust
5 mg/m3 TWA ,respirable fraction
Nuisance Dust Limit
OSHA PEL: 50 mppcf or 15 mg/m3 TWA, total dust
15 mppcf or 5 mg/m3 TWA, respirable fraction

Engineering Control Measures
Use with adequate ventilation. There should be local procedures for the selection, training, inspection and maintenance of this equipment. When used in large volumes, use local exhaust ventilation.

Respiratory Protection
Not normally required. Use dust mask where dustiness is prevalent, or TLV is exceeded.

Hand Protection
Not normally needed when used as a portable fire extinguisher. Use gloves if irritation occurs.

Eye Protection
Chemical goggles or safety glasses with side shields.

Body Protection
Normal work wear.

9. PHYSICAL AND CHEMICAL PROPERTIES

Physical State	Powder
Color	White
Odor	Odorless
Specific Gravity	Ca. 2.2
Boiling Range/Point (°C/F)	Not applicable
Flash Point (PMCC) (°C/F)	Not Flammable
Solubility in Water	16.4g/100g
Vapor Density (Air = 1)	Heavier than air.
Vapor Pressure	Not applicable
Evaporation Rate	Not applicable

10. STABILITY AND REACTIVITY

Stability
Stable under normal conditions.

Conditions to Avoid
- Heat - High temperatures - Exposure to direct sunlight

10. STABILITY AND REACTIVITY

Materials to Avoid
- Strong oxidizing agents - strong acids

Hazardous Polymerization
Will not occur.

Hazardous Decomposition Products
- oxides of carbon

11. TOXICOLOGICAL INFORMATION

Acute Toxicity
Low order of acute toxicity.

Chronic Toxicity/Carcinogenicity
This product is not expected to cause long term adverse health effects.

Calcium carbonate, mica, and clay may contain small quantities of quartz (crystalline silica) as an impurity. Prolonged exposure to respirable crystalline silica dust at concentrations exceeding the occupational exposure limits may increase the risk of developing a disabling lung disease known as silicosis. IARC found limited evidence for pulmonary carcinogenicity of crystalline silica in humans.

Genotoxicity
This product is not expected to cause any mutagenic effects.

Reproductive/Developmental Toxicity
This product is not expected to cause adverse reproductive effects.

12. ECOLOGICAL INFORMATION

Mobility
No relevant studies identified.

Persistence/Degradability
No relevant studies identified.

Bio-accumulation
No relevant studies identified.

Ecotoxicity
No relevant studies identified.

13. DISPOSAL

Dispose of container in accordance with all applicable local and national regulations. Do not cut, puncture or weld on or near to the container. No harm to the environment is expected from this preparation.

14. TRANSPORT INFORMATION

DOT CFR 172.101 Data	Not regulated
UN Proper Shipping Name	Not regulated
UN Class	None
UN Number	None
UN Packaging Group	None

15. REGULATORY INFORMATION

EU Label Information

Classification and labelling have been performed according to EU directives 67/548/EEC and 99/45/EC including amendments.

EU Hazard Symbol and Indication of Danger.

This preparation is not classified as dangerous.

R phrases

None

S phrases

None.

US REGULATIONS (Federal, State) and INTERNATIONAL CHEMICAL REGISTRATION LAWS

TSCA Listing

This product contains ingredients that are listed on or exempt from listing on the EPA Toxic Substance Control Act Chemical Substance Inventory.

EINECS Listing

All ingredients in this product have not been verified for listing on the European Inventory of Existing Commercial Chemical Substances (EINECS) or the European List of New Chemical Substances (ELINCS).

DSL/NDSL (Canadian) Listing

All ingredients in this product are listed on the Domestic Substance List (DSL) or the Non-Domestic Substance List (NDSL) or are exempt from listing.

WHMIS Classification

D2B

This product was classified in accordance with the hazard criteria of the Canadian Controlled Products Regulations and the MSDS contains all the information required by these regulations.

MA Right To Know Law

All components have been checked for inclusion on the Massachusetts Substance List (MSL). Those components present at or above the de minimus concentration include: - Mica (12001-26-2) 1-4% - Amorphous Silica (7631-86-9) <2% - Calcium Carbonate (471-34-1) 10-20%

PA Right To Know Law

This product contains the following chemicals found on the Pennsylvania Hazardous Substance List: - Mica (12001-26-2) 1-4% - Amorphous Silica (7631-86-9) <2% - Calcium Carbonate (471-34-1) 10-20%

NJ Right To Know Law

This product contains the following chemicals found on the NJ Right To Know Hazardous Substance List: Mica (12001-26-2) 1-4% - Amorphous Silica (7631-86-9) <2%

15. REGULATORY INFORMATION

California Proposition 65
This product does not contain materials which the State of California has found to cause cancer, birth defects or other reproductive harm.

SARA Title III Sect. 302 (EHS)
This product does not contain any chemicals subject to SARA Title III Section 302.

SARA Title III Sect. 304
This product does not contain any chemicals subject to SARA Title III Section 304.

SARA Title III Sect. 311/312 Categorization
- Immediate (Acute) Health Hazard

SARA Title III Sect. 313
This product does not contain a chemical which is listed in Section 313 at or above de minimis concentrations.

16. OTHER INFORMATION

NFPA Ratings
NFPA Code for Health - 1
NFPA Code for Flammability - 0
NFPA Code for Reactivity - 0
NFPA Code for Special Hazards - None

HMIS Ratings
HMIS Code for Health - 1
HMIS Code for Flammability - 0
HMIS Code for Reactivity - 0
HMIS Code for Personal Protection - See Section 8

Abbreviations
N/A: Denotes no applicable information found or available
CAS#: Chemical Abstracts Service Number
ACGIH: American Conference of Governmental Industrial Hygienists
OSHA: Occupational Safety and Health Administration
TLV: Threshold Limit Value
PEL: Permissible Exposure Limit
STEL: Short Term Exposure Limit
NTP: National Toxicology Program
IARC: International Agency for Research on Cancer
R: Risk
S: Safety

Prepared By: EnviroNet LLC.

The information contained herein is based on data believed to be accurate. However, no representation, warranty, or guarantee is made to its accuracy, reliability or completeness. It is the user's responsibility to satisfy himself as to the suitability and completeness of such information for its own particular use. Kidde – Residential and Commercial assumes no responsibility for personal injury or property damage resulting from use, handling or from contact with this product.

SPECIFICATION SECTION

DIVISION 15 - MECHANICAL

KOHLER®

UNDERTONE™

UNDERCOUNTER SINK
K-3345

Features

- *18 gauge stainless steel*
- *Undercounter*
- *Single compartment*
- *Includes installation hardware*
- *Five-sided bowl*
- *15-3/4″ (40 cm) x 15-3/4″ (40 cm)*

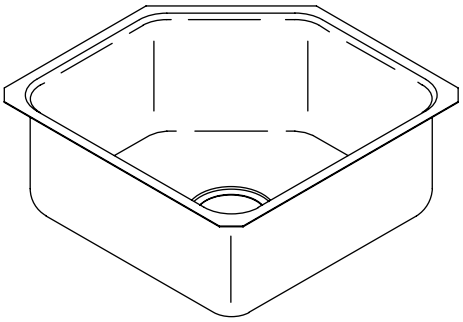

Codes/Standards Applicable

Specified model meets or exceeds the following:

- *ASME A112.19.3*
- *IAPMO/UPC*
- *CSA B45*

Colors/Finishes

- NA: None applicable

Accessories:

- CP: Polished Chrome
- 0: White
- Other: Refer to Price Book for additional colors/finishes
- NA: None applicable

Specified Model

Model	Description	Colors/Finishes	
K-3345	Undercounter sink	❑ NA	
Optional Accessories			
K-3193	Bottom basin rack	❑ 0 White	❑ Other_____
K-3294	Hardwood cutting board	❑ NA	
K-8801	Duostrainer® sink strainer	❑ CP	❑ Other_____
K-8813	Stainless steel sink strainer with tailpiece	❑ CP	
K-8814	Stainless steel sink strainer less tailpiece	❑ CP	

Product Specification

The undercounter sink shall be 15-3/4″ (40 cm) in length and 15-3/4″ (40 cm) in width. Sink shall be made of 18 gauge stainless steel. Sink shall be single compartment with five-sided bowl. Sink shall include installation hardware. Sink shall be Kohler Model K-3345.

USA: 1-800-4-KOHLER
Canada: 1-800-964-5590
kohler.com

UNDERTONE™

Technical Information

Fixture*:	
Basin area	15-3/4″ (40 cm) x 15-3/4″ (40 cm)
Water depth	7-7/16″ (19 cm)
Drain hole	3-5/8″ (9.2 cm) D.
*Approximate measurements for comparison only.	

Included components:	
Hardware kit	91915
Cut-out template	113394-7

Installation Notes

Install this product according to the installation guide.

Allow a minimum of 2″ (5.1 cm) clearance around the sink rim for clip attachment.

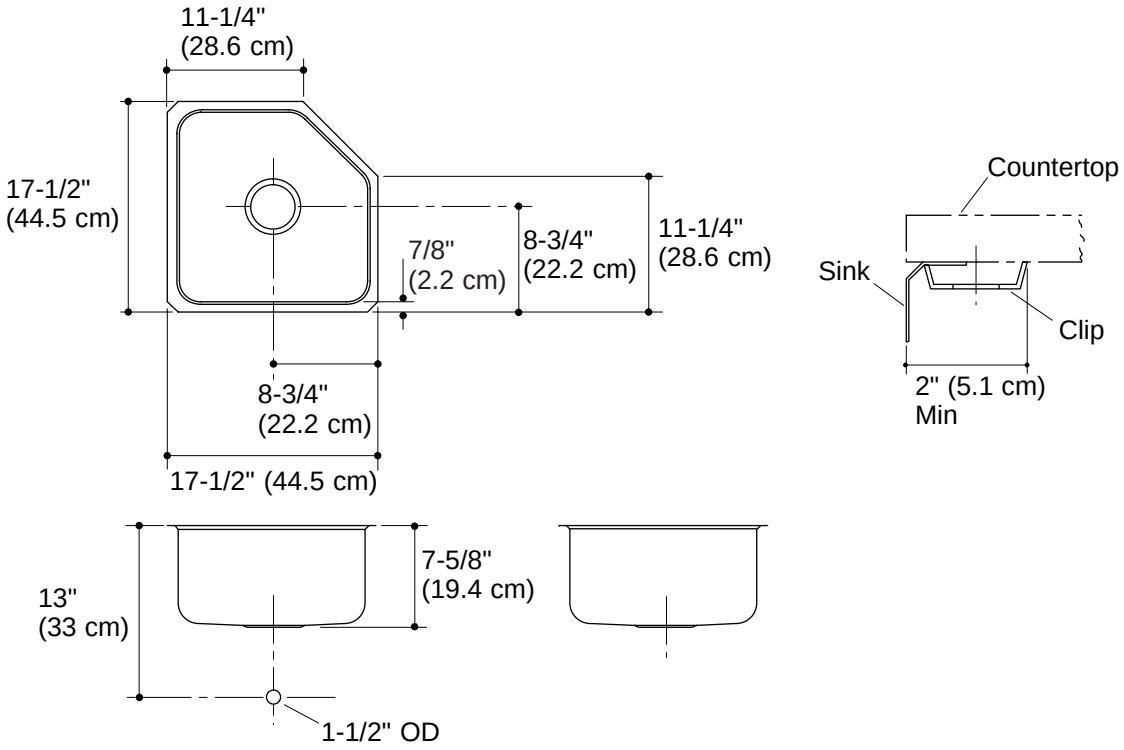

Product Diagram

THE BOLD LOOK OF KOHLER®

STERLING

A KOHLER COMPANY

STANTON

DUAL FORCE™ HIGH EFFICIENCY TOILET
402040

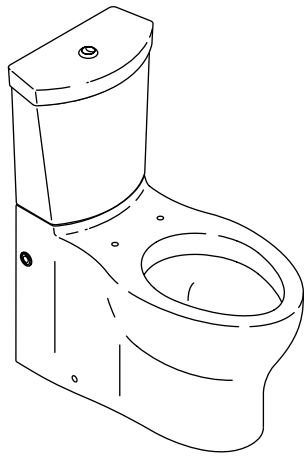

Features

- *12″ (30.5 cm) rough-in*
- *Modern styling made of Grade A vitreous china*
- *One flush performance limited guarantee*
- *2″ (5.1 cm) glazed trapway*
- *Elongated bowl*
- *Standard elongated seat - not supplied*
- *Seat post holes with 5-1/2″ (14 cm) centers*
- *5 year limited warranty*
- *Dual Force™ flushing system*
- *1.6 gpm (6 lpm) or .8 gpm (3 lpm)*
- *Two-bolt installation system*
- *Concealed trapway*
- *27-5/8″ (70.2 cm) x 14-3/16″ (36 cm) x 31-1/2″ (80 cm)*

Codes/Standards Applicable

Specified model meets or exceeds the following:

- *ASME A112.19.2*
- *IAPMO/UPC*
- *ASME A112.19.14*
- *CSA B45*

Colors/Finishes

- 0: White
- Other: Refer to Price Book for additional colors/finishes

Accessories:

- NA: None applicable

Specified Model

Model	Description	Included tank	Included bowl	Colors/Finishes	
402040	Elongated front toilet, 12″ (30.5 cm) rough-in	402031	402030	❑ 0	❑ Other_____

SterlingPlumbing.com

Visit us online for fixture color choices, detailed product information, color photos, installation instructions, care guides, and warranties. Sterling offers additional lines of plumbing products to complement the Sterling product you've chosen. Sign up for the Sterling monthly e-newsletter which showcases our latest product innovations. You may also call our Sterling Plumbing Answer Center from within the USA at 1-888-STERLING in addition to consulting with your local dealer. Sterling. Strong. Professional. Design.

Technical Information

Fixture:	
Configuration	2-piece
Water per full flush	1.6 gallons (6 L)
Water per half flush	.8 gallons (3 L)
Passageway	2″ (5 cm)
Water area	4-1/2″ (11.4 cm) x 5-3/4″ (14.6 cm)
Seat post hole centers	5-1/2″ (14 cm)

Included Components:	
Chrome push button	1035417
Float valve kit	1035410
Flush valve kit	1035413
Toilet lid	1052066

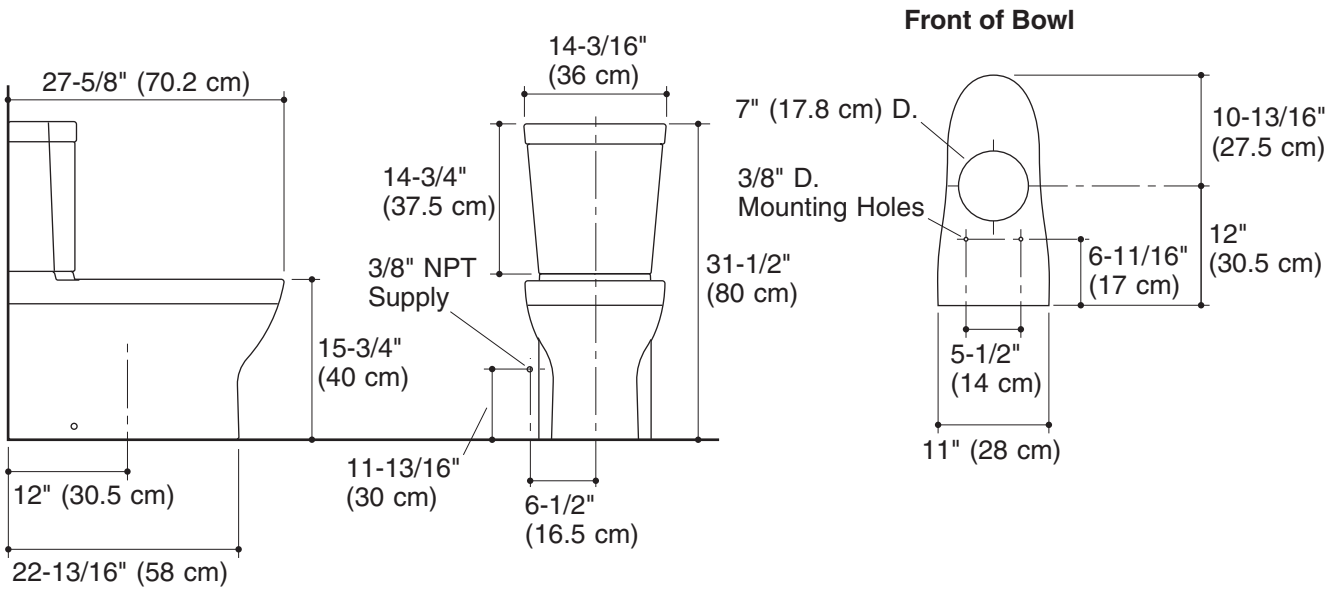

Product Diagram

KOHLER FAUCETS

PURIST®

Features

- *Brass construction*
- *Available with cross or lever handles*
- *Front seal plate assembly*
- *Handle assembly*
- *Complements Purist® Suite*

THERMOSTATIC FAUCET TRIM
K-T14488
ALSO K-T14489, K-T14490, K-T14491

ADA

Codes/Standards Applicable

Specified model meets or exceeds the following:

- *ASME A112.18.1*
- *CSA B125*
- *IAPMO/UPC*
- *ADA*

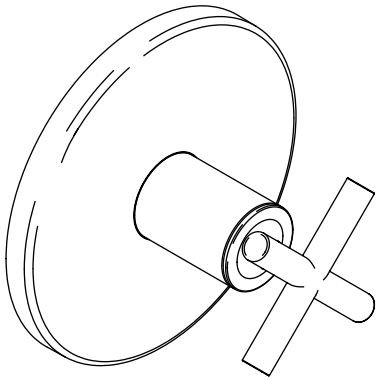

Colors/Finishes

- CP: Polished Chrome
- Other: Refer to Price Book for additional colors/finishes
- NA: None applicable

Specified Model

For complete faucet, both faucet trim and valving must be specified.

Model	Description	Colors/Finishes	
K-T14488-3	Thermostatic valve trim, cross handle	❑ CP	❑ Other ____
K-T14488-4	Thermostatic valve trim, lever handle	❑ CP	❑ Other ____
K-T14489-4	Stacked thermostatic valve trim. lever handle **only**	❑ CP	❑ Other ____
K-T14490-3	Volume control trim, cross handle	❑ CP	❑ Other ____
K-T14490-4	Volume control trim, lever handle	❑ CP	❑ Other ____
K-T14491-3	Transfer valve trim, cross handle	❑ CP	❑ Other ____
K-T14491-4	Transfer valve trim, lever handle	❑ CP	❑ Other ____

Required Accessory *(continued on page 2)*

K-669-KS	3/4″ Thermostatic valve	❑ NA
K-670-KS	3/4″ Stacked thermostatic valve	❑ NA
K-671-K	3/4″ Volume control	❑ NA
K-672-K	3/4″ Transfer valve	❑ NA
K-679-KS	1/2″ Thermostatic valve	❑ NA

Product Specification

Thermostatic faucet trim shall be of brass construction. Trim shall include front seal plate assembly and handle assembly. Product shall be available with cross or lever handles. Thermostatic faucet trim shall complement the Purist® Suite. Faucet trim shall be Kohler Model K-T____-____-____ and thermostatic valving shall be K-____-__-NA.

USA: 1-800-4-KOHLER
Canada: 1-800-964-5590
kohler.com

PURIST®

K-680-KS	1/2″ Stacked thermostatic valve	❑ NA
K-681-K	1/2″ Volume control	❑ NA

Installation Notes

Install this product according to the installation guide.

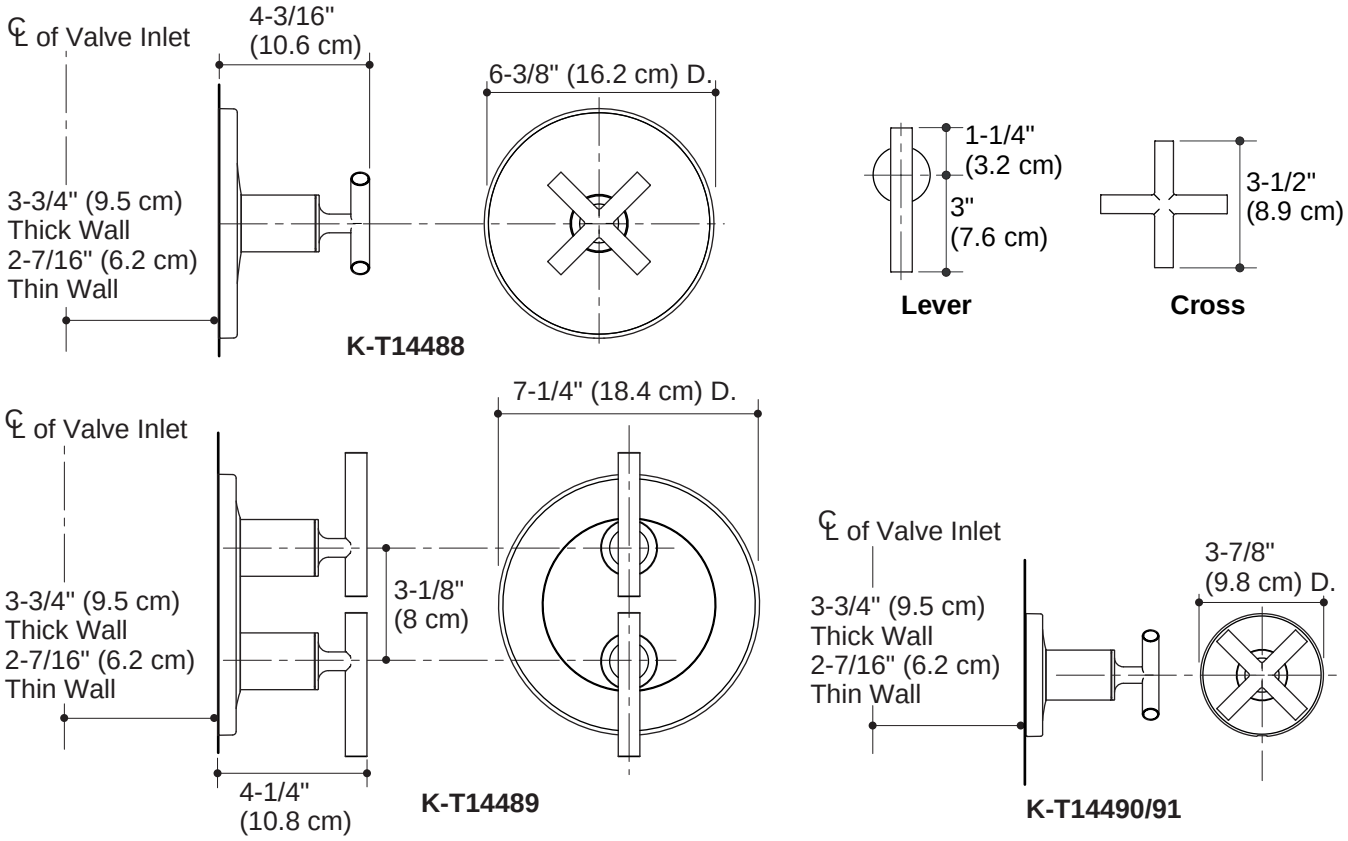

Product Diagram

THE BOLD LOOK OF KOHLER®

KOHLER FAUCETS

WATERTILE®

SHOWERHEAD K-8022 ALSO K-8023

Features

- *1/2″ NPT connections*
- *2.5 gallons (9.5 L) per minute maximum flow rate [at 80 psi (552 kPa)*
- *Vertical wall installation*
- *Available as a 54-nozzle with soothing spray [K-8022] or a 22-nozzle with stimulating spray [K-8023]*
- *Fully adjustable, pivoting MasterClean™ sprayface*

K-8022

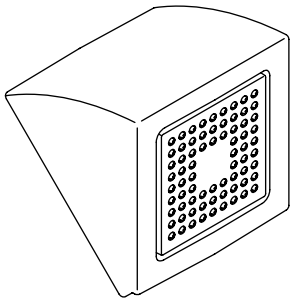

K-8023

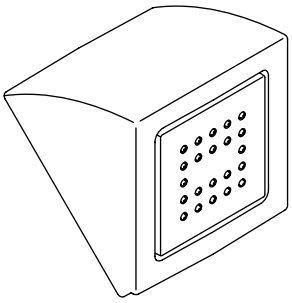

Codes/Standards Applicable

Specified model meets or exceeds the following:

- *ASME A112.18.1/CSA B125.1*
- *IAPMO/cUPC*
- *Energy Policy Act of 1992*

Colors/Finishes

- CP: Polished Chrome
- Other: Refer to Price Book for additional colors/finishes

Specified Model

Model	Description	Colors/Finishes	
K-8022	54-nozzle showerhead with soothing spray	❑ CP	❑ Other_____
K-8023	22-nozzle showerhead with stimulating spray	❑ CP	❑ Other_____

Product Specification

Showerhead shall be for 1/2″ NPT connections. Showerhead shall be for a vertical wall installation. Product shall have a flow rate of 2.5 gallons (9.5 L) per minute maximum at 80 psi (552 kPa). Product shall be available as a 54-nozzle with soothing spray [K-8022] or a 22-nozzle with stimulating spray [K-8023]. Product shall feature a fully adjustable, pivoting MasterClean sprayface which resists mineral buildup for years of reliable performance. Showerhead shall be Kohler Model K-____-____.

USA: 1-800-4-KOHLER
Canada: 1-800-964-5590
kohler.com

WATERTILE®

Installation Notes

Install this product according to the installation guide.

K-8022

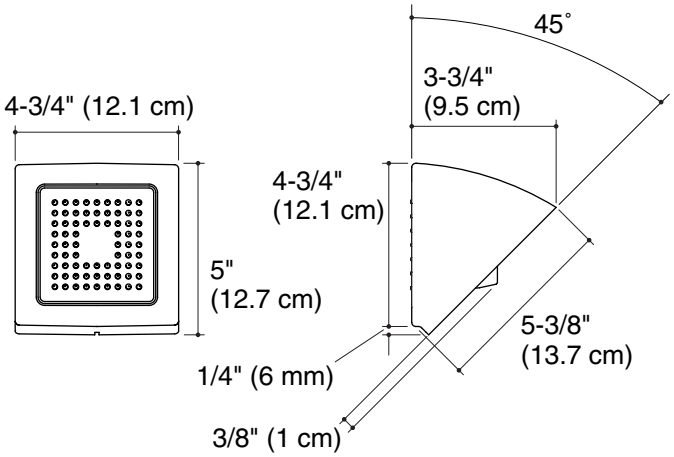

K-8023

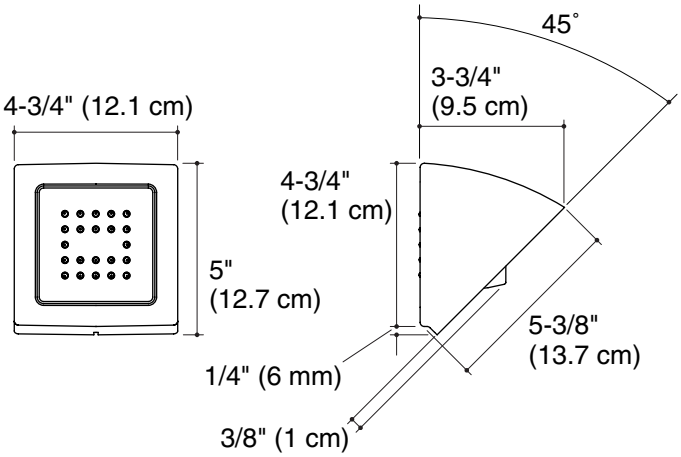

Product Diagram

THE BOLD LOOK OF KOHLER®

KOHLER FAUCETS

PURIST®

LAVATORY FAUCET
K-14402

ADA

Features

- *Brass construction*
- *One-piece, self-contained ceramic disc valve allows both volume and temperature control*
- *Temperature memory allows faucet to be turned on and off at any temperature setting*
- *High-temperature limit stop for added safety*
- *2.2 gpm (8.3 lpm) flow rate*
- *Lower flow aerator options are available (refer to the Kohler Price Book)*
- *Single-hole mounting*
- *Pop-up drain with lift rod and tailpiece*
- *Flexible supplies*
- *Available with straight or curved handle*
- *5-1/2″ (14 cm) spout*

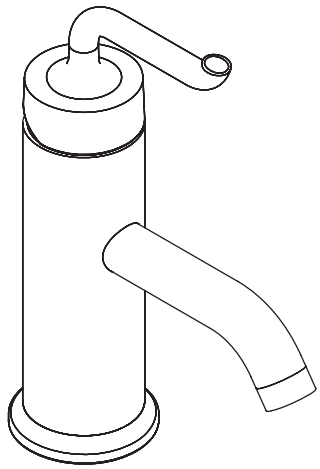

Codes/Standards Applicable

Specified model meets or exceeds the following:

- *ASME A112.18.1/CSA B125.1*
- *IAPMO/UPC*
- *NSF 61*
- *ADA*

Colors/Finishes

- CP: Polished Chrome
- PB: Polished Brass
- Other: Refer to Price Book for additional colors/finishes

Specified Model

Model	Description	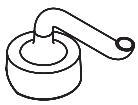			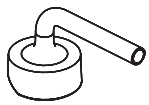		
K-14402-4	With curved handle	❑ CP	❑ PB	❑ Other ____			
K-14402-4A	With straight handle				❑ CP	❑ PB	❑ Other ____

Product Specification

Single-control lavatory faucet shall be of brass construction and rated at 2.2 gallons (8.3 L) per minute. Faucet shall have lower flow aerator options. Valve shall be a one-piece, self-contained ceramic disc valve, allowing volume and temperature control. Valve shall feature temperature memory, allowing the faucet to be turned on and off at any temperature setting, and includes a high-temperature limit stop. Faucet shall include single-hole mounting, flexible connections, 5-1/2″ (14 cm) spout, pop-up drain with lift rod and tailpiece, and curved or straight handle. Faucet shall be Kohler Model K-14402-_____-_____.

USA: 1-800-4-KOHLER
Canada: 1-800-964-5590
kohler.com

PURIST®

Installation Notes

Install this product according to the installation guide.

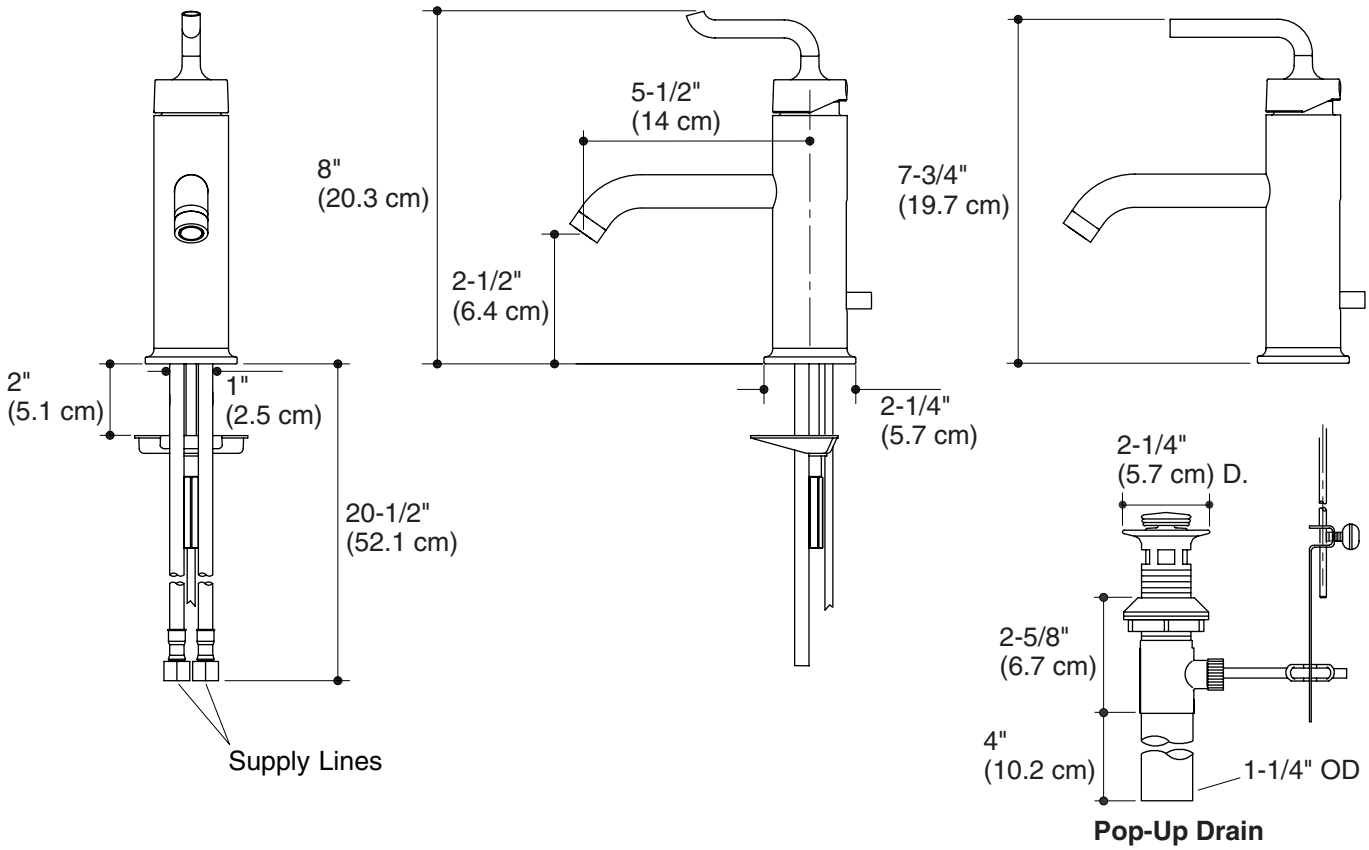

Product Diagram

THE BOLD LOOK OF KOHLER®

KOHLER®

ESCALE™

WALL-MOUNT LAVATORY
K-19033

Features

- *Vitreous china*
- *Offset tap position maximizes basin size*
- *Integral shroud and towel bar*
- *19-11/16″ (50 cm) x 12-7/16″ (31.6 cm)*

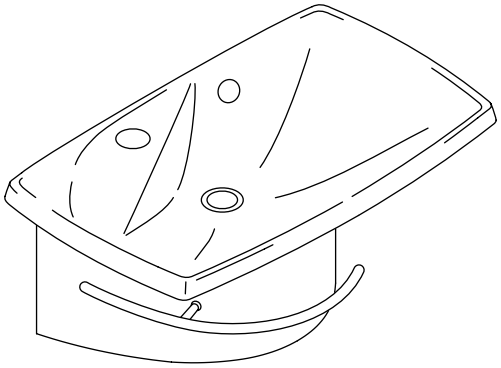

Codes/Standards Applicable

Specified model meets or exceeds the following:

- *IAPMO/UPC*
- *CSA International*

Colors/Finishes

- 0: White
- 47: Almond
- Other: Refer to Price Book for additional colors/finishes

Specified Model

Model	Description	Colors/Finishes		
K-19033-1	Wall mount lavatory	❑ 0	❑ 47	❑ Other_____

Product Specification

The wall-mount lavatory basin shall be 19-11/16″ (50 cm) in length and 12-7/16″ (31.6 cm) in width. Lavatory shall be made of vitreous china. Lavatory shall be Kohler Model K-19033-1-_____.

USA: 1-800-4-KOHLER
Canada: 1-800-964-5590
kohler.com

ESCALE™

Technical Information

Fixture*:	
Basin area	19-11/16″ (50 cm) x 12-7/16″ (31.6 cm)
Water depth	2″ (5.1 cm)
Drain hole	1-11/16″ (4.3 cm) D.
Faucet hole	1-3/8″ (3.5 cm) D.
*Approximate measurements for comparison only.	

Included component:	
Mounting hardware kit	C25513000

Installation Notes

Install this product according to the installation guide.

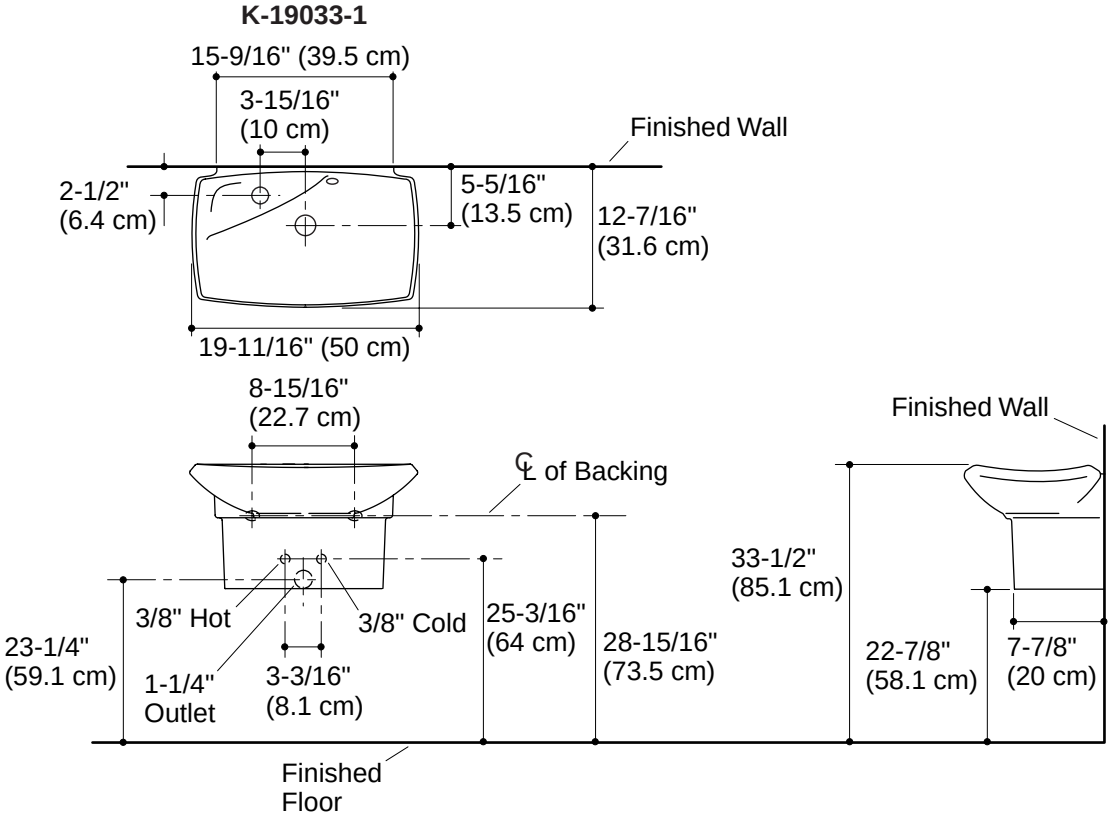

Product Diagram

THE BOLD LOOK OF KOHLER®

KOHLER FAUCETS

ESSEX ™

KITCHEN SINK FAUCET
K-8763
ALSO K-8762

ADA

Features

- *Brass construction*
- *Brass valve bodies*
- *Quarter-turn washerless ceramic disc valves*
- *2.5 gpm (9.5 lpm)*
- *Lower flow aerator options are available (refer to the Kohler Price Book)*
- *Wristblade handles*
- *Available with or without handspray*
- *Optional escutcheon plate is available for three-hole installations*
- *9-1/4″ (23.5 cm) gooseneck swing spout*

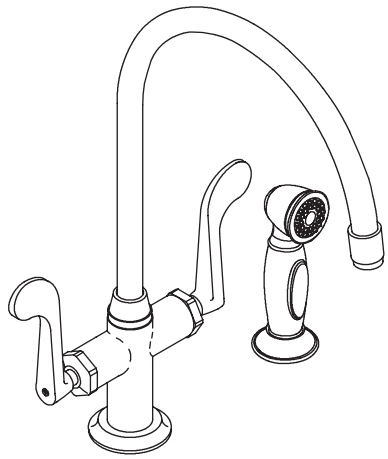

Codes/Standards Applicable

Specified model meets or exceeds the following:

- *ASME A112.18.1/CSA B125.1*
- *IAPMO/cUPC*
- *NSF 61*
- *Energy Policy Act of 1992 (EPACT)*
- *ADA*

Colors/Finishes

- CP: Polished Chrome
- BN: Brushed Nickel

Specified Model

Model	Description	Colors/Finishes			
K-8763	Kitchen sink faucet with accent handspray (shown)	❑ CP	❑ BN		❑ Other ____
K-8763-BX	Kitchen sink faucet with classic handspray			❑ BX	
K-8762	Kitchen sink faucet less handspray	❑ CP	❑ BN		❑ Other ____

Optional Accessories			
K-14511	10-1/2″ (26.7 cm) escutcheon plate for three-hole installations	❑ CP	❑ BN

Product Specification

The two-handle kitchen sink faucet shall be of brass construction. Faucet shall feature brass valve bodies. Faucet shall feature quarter-turn washerless ceramic disc valves, assuring positive handle stop positioning. Faucet shall include 9-1/4″ (23.5 cm) gooseneck swing spout, and wristblade handles. Faucet shall be available with or without handspray. Faucet shall be available with optional escutcheon plate for three-hole installations. Faucet shall have a flow rate of 2.5 gpm (9.5 lpm) with lower flow aerator options available (refer to the Kohler Price Book). Faucet shall be Kohler Model K-_____-_____ or K-8763-BX.

USA: 1-800-4-KOHLER
Canada: 1-800-964-5590
kohler.com

ESSEX TM

Installation Notes

Install this product according to the installation guide.

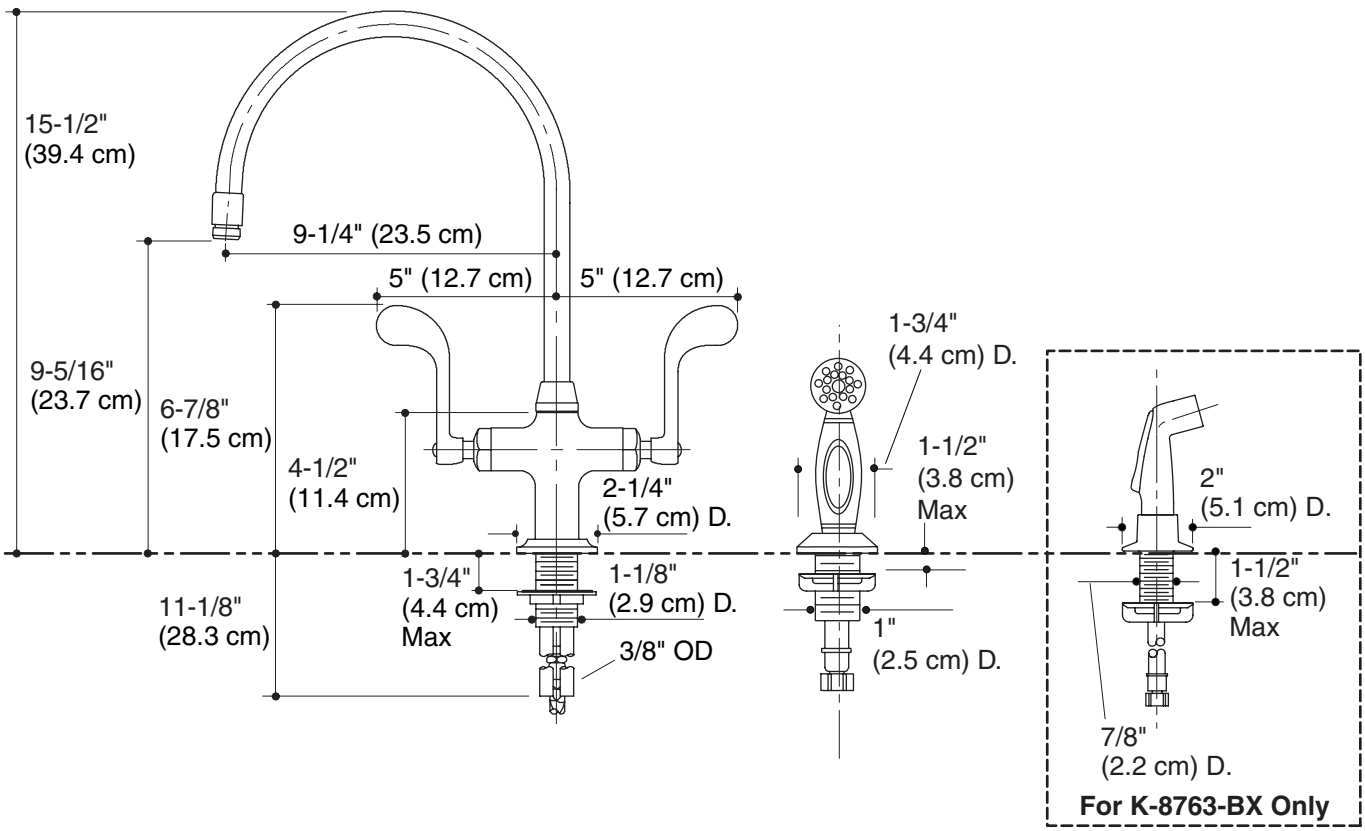

Product Diagram

THE BOLD LOOK OF KOHLER®

KOHLER FAUCETS

MASTERSHOWER™

THERMOSTATIC MIXER
K-669-KS
ALSO K-679-KS

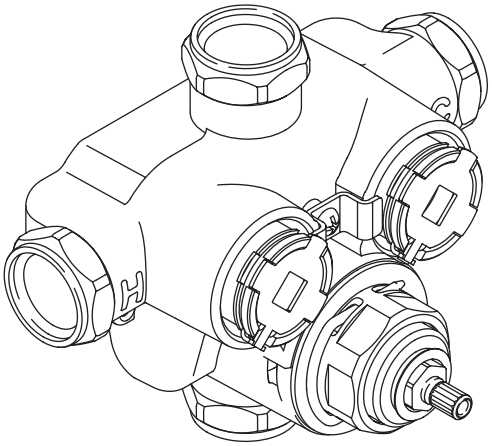

Features

- *Brass construction*
- *Wall-mount*
- *Brass valve body*
- *Single-handle control*
- *High-flow valving*
- *High-temperature limit stop for added safety*
- *Temperature-balancing mechanism*
- *Scald hazard prevention*
- *Integral stops*
- *Crossflow prevention*
- *1/2″ or 3/4″ NPT connections*
- *Filter screens*
- *Less volume control*

Codes/Standards Applicable

Specified model meets or exceeds the following:

- *ASME A112.18.1*
- *ASSE 1016*
- *CSA B125*
- *IAPMO/UPC*

Colors/Finishes

- NA: None applicable

Specified Model

Model	Description	Colors/Finishes
K-669-KS	3/4″ thermostatic mixer - less volume control	❑ NA
K-679-KS	1/2″ thermostatic mixer - less volume control	❑ NA
Required Accessory:		
K-671-K	3/4″ volume control valve - for use on bath and shower outlets	❑ NA
K-681-K	1/2″ volume control valve - for use on bath and shower outlets	❑ NA
Optional Accessory:		
K-9663	Twin ell - for use with diverter bath spouts only	❑ NA

Product Specification

Single-handle wall-mount thermostatic mixer less volume control shall be of brass construction. Product shall feature a brass valve body, high-flow valving, high-temperature limit stop for added safety, and temperature-balancing mechanism. Product shall feature integral stops, crossflow prevention, filter screens, and scald hazard prevention. Product shall be available with 1/2″ or 3/4″ NPT connections. The thermostatic mixer shall be Kohler Model K-_____-KS-NA and the required volume control valve shall be K-_____-K-NA.

USA: 1-800-4-KOHLER
Canada: 1-800-964-5590
kohler.com

MASTERSHOWER™

Installation Notes

Install this product according to the installation guide.

The K-669-KS and K-679-KS thermostatic mixer valves require a separate volume control valve, K-671-K or K-681-K, for each bath and/or shower outlet.

For bath-only or shower-only installations, an NPT plug must be installed in any unused outlet.

The lower port of the thermostatic mixer is intended for use with a bath spout only. If a bath spout is not used with this product, the lower port must be plugged.

For installations with a diverter spout, a twin ell, K-9663, is required between the valve and the spout. It is acceptable for the supply to the K-9663 twin ell to run from the top or bottom port through the volume control valve if the remaining unused port is plugged.

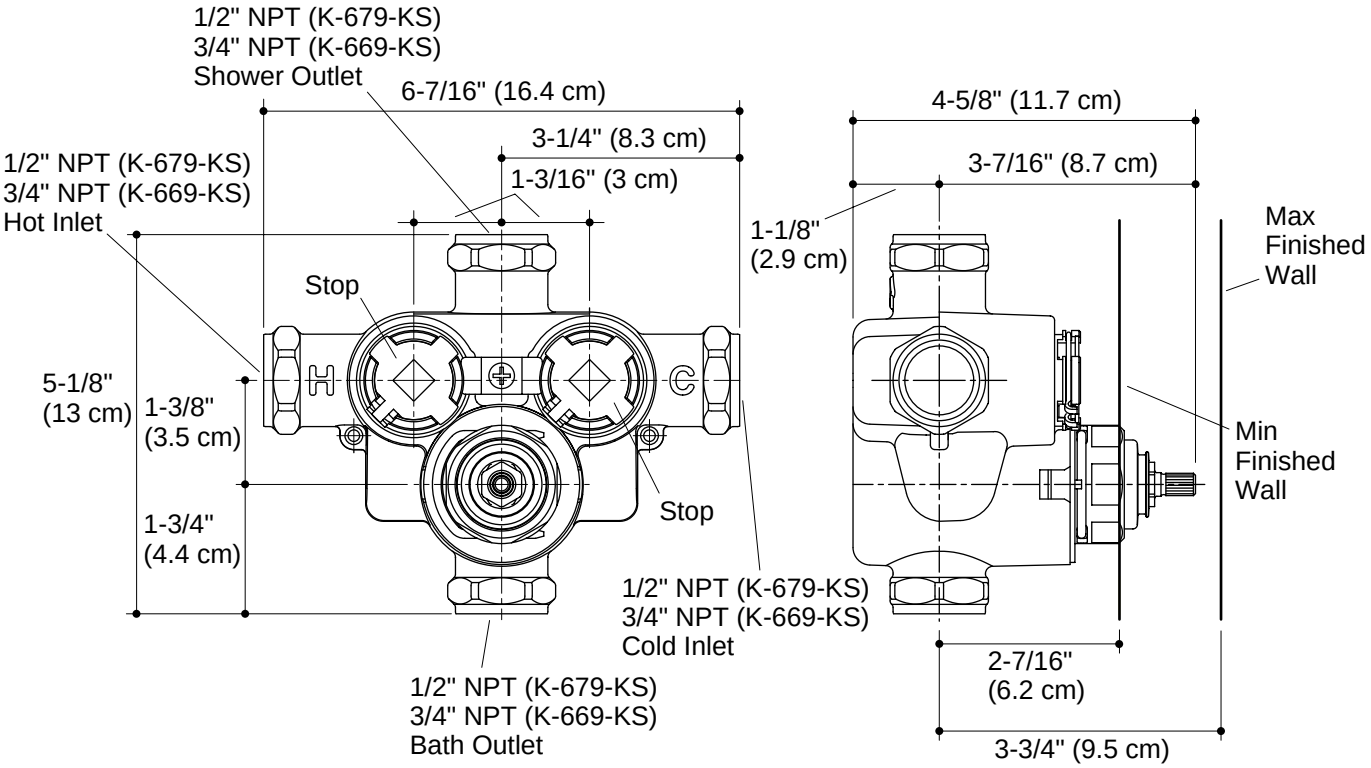

Product Diagram

THE BOLD LOOK OF KOHLER®

Submittal Data Information

101-028

Model 006 Cartridge Circulator

Effective: March 15, 2004 **Supersedes:** December 1, 2002

Job: _____ Engineer: _____ Contractor: _____ Rep: _____

ITEM NO.	MODEL NO.	IMP. DIA.	G.P.M.	HEAD/FT.	H.P.	ELEC. CHAR.

Features

- Standard High Capacity Output-Compact Design
- Quiet, Efficient Operation
- Direct Drive-Low Power Consumption
- Unique Replaceable Cartridge Design-Field Serviceable
- Self Lubricating
- No Mechanical Seal
- Unmatched Reliability-Maintenance Free
- Bronze Construction with Sweat, Threaded or Union Connections

Materials of Construction

Casing (Volute):	Bronze
Stator Housing:	Steel
Cartridge:	Stainless Steel
Impeller:	Non-Metallic
Shaft:	Ceramic
Bearings:	Carbon
O-Ring & Gaskets:	EPDM

Model Nomenclature

B - Bronze, Sweat
BC - Bronze, Sweat, Panel Mount Tappings
BT - Bronze, Threaded
BC-1 - Bronze, Union, Panel Mount Tappings
Variations:
Z - Zoning Circulator
VS - Variable Speed, Set Point
VR - Variable Speed, Outdoor Reset
VV - Variable Speed, Variable Voltage

Performance Data

Flow Range: 0 – 10 GPM
Head Range: 0 – 9 Feet
Minimum Fluid Temperature: 40°F (4°C)
Maximum Fluid Temperature: 220°F (104°C)
Maximum Working Pressure: 125 psi
Connection Sizes:
1/2" Swt, 3/4" Swt, 3/4" NPT, or Union

c UL us LISTED

FOR INDOOR USE ONLY

Application

The Taco 006 is designed for circulating hot or chilled fresh water in open or closed loop applications. Typical uses include hydronic heating, domestic hot water recirculation, hydro-air heating/cooling, heat recovery units, water source heat pumps, drain down open loop Solar systems and potable water applications. The unique, replaceable cartridge contains all of the moving parts and allows for easy service instead of replacing the entire circulator. The compact, low power consumption design is ideal for high efficiency jobs.

Pump Dimensions & Weights

		A		B		C		D		F		G		Ship Wt.	
Model	Conn.	in.	mm	in.	mm	in.	mm	in.	mm	in.	mm	in.	mm	lbs.	Kg
006-B4	3/4"Swt	5-1/8	130	4-1/8	105	2-3/16	56	3-1/16	78	3-5/16	84	4-13/32	112	6.0	2.7
006-BC4	1/2"Swt	5-1/8	130	4-1/8	105	2-1/8	54	3-1/16	78	3-5/16	84	4-1/4	108	6.0	2.7
006-BT4	3/4"NPT	5-5/8	143	4-7/8	124	2	51	3-1/16	78	3-5/16	84	4	102	6.0	2.7
006-BC4-1	Union	5-5/32	131	4-11/32	110	2-31/32	76	3-1/16	78	3-5/16	84	5-15/16	151	6.0	2.7

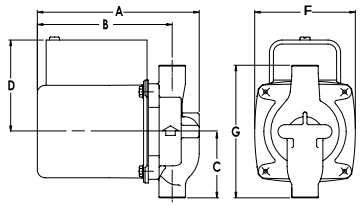

Mounting Positions

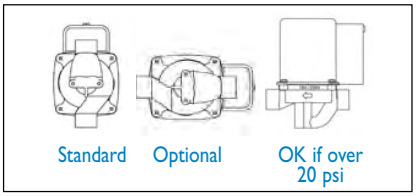

Electrical Data

Model	Volts	Hz	Ph	Amps	RPM	HP
006 All Models	115	60	1	.52	3250	1/40
Motor Type	Permanent Split Capacitor Impedance Protected					
Motor Options	220/50/1, 220/60/1, 230/60/1, 100/110/50/60/1					

Performance Field - 60Hz

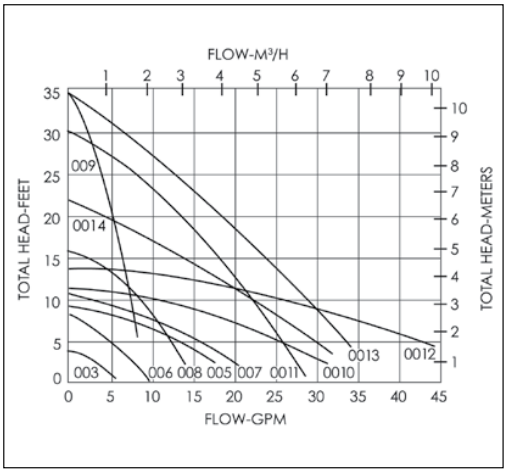

Do it Once. Do it Right.®

TACO INC., 1160 Cranston Street, Cranston, RI 02920 Telephone: (401) 942-8000 Fax: 942-2360
TACO (Canada), Ltd., 6180 Ordan Drive, Mississauga, Ontario L5T 2B3 Telephone: (905) 564-9422 Fax: (905) 564-9436
Visit our website at: www.taco-hvac.com

Apricus Solar Co., Ltd
(an Australian-Sino Joint Venture)

Manufacturing Plant
(under Australian management)
402, Building 8 East, Pukou New & High Tech Development Zone
Nanjing, China, 210061
Ph: +86 25 58649133 (GMT+08:00)
Fax: +1 2083364189

Apricus Solar Collector General Specifications	
Manifold Casing Material	Aluminium (grade 3A21)
Frame Material	1.5mm 304 Stainless Steel
Header Pipe Material	99.93% pure Copper & lead free 45% silver brazing
Insulation	Compressed Glass Wool - K = 0.043W/mK
Rubber Seals and Rings	HTV grade silicone rubber
Optimal installation angle	20-70° Vertical, -5° to +5° Horizontal
Maximum Operating Pressure	8bar - 116psi
Optimal flow rate	0.1L/min/tube - 0.026G/min/tube
Performance Data (SPF)	Conversion Factor: ho = 0.717 Loss Coefficients: a1 = 1.52, a2 = 0.0085

Model Specifications					
Model	AP-Demo	AP-10	AP-20	AP-22	AP-30
Overall Length (mm / inch) 1	660 / 25.9"	1980 / 77.9"			
Overall Width (mm / inch)	376 / 14.8"	796 / 31.3"	1496 / 58.8"	1636 / 64.4"	2196 / 86.4"
Overall Height (mm / inch)	156 / 6.1" (including flush roof mounting frame)				
Absorber Area (m^2 / ft^2) 2	0.08 / 0.86	0.8 / 8.6	1.6 / 17.2	1.76 / 18.9	2.4 / 25.8
Fluid Capacity (ml / ounces)	190 / 6.4	290 / 9.8	510 / 17.2	550 / 18.6	833 / 28.2
Gross Area (m^2 / ft^2) 3	0.25 / 2.67	1.57 / 16.95	2.96 / 31.8	3.24 / 34.8	4.35 / 46.8
Dry Weight (kg / pounds)	8 / 18	35 / 77	64 / 140	71 / 157	95 / 209

1. Length and width do not include the inlet and outlet which protrude from either the rear or ends of the manifold.
2. Absorber area calculated as: D x L x N where:
   D = diameter of the absorber tube, in this case 0.047m
   L = exposed length of tube: For 1.8m tubes this is 1.72m
   N = number of tubes (4, 10, 20, 22, 30)
   Eg. 0.047 x 1.72 x 20 = 1.6m^2 absorber area (1m^2 = 10.76ft^2)
3. Calculated simply as overall length (including frame) x overall width.
4. AP Models are named as follows:
   AP(Manifold Casing Colour)(Port Location) - (Tube Number)
   Manifold Casing Material: K = Black, S = Silver
   Port Location: R = Rear, E = End
   Tube Number: 4, 10, 20, 22, 30
   Eg. APKR-20 = black rear port 20 tube manifold.

Evacuated Tube Basic Specifications

Length (nominal)	1500mm /1800mm
Outer tube diameter	58mm
Inner tube diameter	47mm
Glass thickness	1.6mm
Thermal expansion	3.3×10^{-6} °C
Material	Borosilicate Glass 3.3
Absorptive Coating	Graded Al-N/Al
Absorptance	>92% (AM1.5)
Emittance	<8% (80°C)
Vacuum	$P<5 \times 10^{-3}$ Pa
Stagnation Temperature	>200°C
Heat Loss	<0.8W/ (m2°C)
Maximum Strength	0.8MPa

THE POWER OF THE SUN

Storage Tanks for Solar Applications

Single Heat Exchanger Models

Technical Data

Type		SB 150 S	SB 200 S	SBB 300 S	SBB 400 S
Contents					
Storage capacity	Gal / ltr	39.0 / 147.63	52 / 196.84	80.6 / 305	108.6 / 411
Volume of heat exchanger, top	Gal / ltr	NA	NA	NA	NA
Volume of heat exchanger, bottom	Gal / ltr	1.9 / 7.2	2.7 / 9.1	2.7 / 10.1	2.9 / 11.3
Pressure					
Working pressure	PSI / bar	150 / 10	150 / 10	150 / 10	150 / 10
Tested to pressure	PSI / bar	217 / 15	217 / 15	217 / 15	217 / 15
Max. pressure of boiler loop	PSI / bar	150 / 10	150 / 10	150 / 10	150 / 10
Temperature					
Max. temperature solar loop	°F / °C	203 / 95	203 / 95	203 / 95	203 / 95
Max. temperature of boiler loop	°F / °C	203 / 95	203 / 95	203 / 95	203 / 95
Heat exchanger					
Surface area heat exchanger top	sq. inch / m^2	NA	NA	NA	NA
Surface area heat exchanger bottom	sq. inch / m^2	1742	2059	2325 / 1.5	2635 / 1.7
Weights					
Tank weight empty	lb. / kg	190 / 86.18	226 / 102.5	292 / 133	371 / 169
Tank weight full	lb. / kg	523 / 237.2	658 / 298.4	988 / 448	1304 / 591
Other					
Standby losses in 24 hours	BTU / kWh	6500 / 1.9	4434 / 1.3	6500 / 1.9	7500 / 2.2
Cold/hot water connection		3/4" Male NPT		for 1" copper pipe with adapters, provided with unit	
Dimensions					
Height with insulation	in. / mm	50.5 /	62.75 /	66.1 / 1679	72.7 / 1848
Width with insulation	in. / mm	20.5 /	20.5 /	27.55 / 700	29.52 / 750

SB 150 S & SB 200 S models

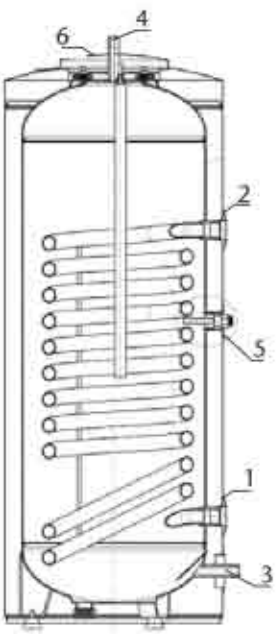

1 Heat exchanger out
2 Heat exchanger in
3 Cold water inlet
4 Hot water outlet
5 Well for thermostat
6 T & P valve

SBB 300 S & SBB 400 S models

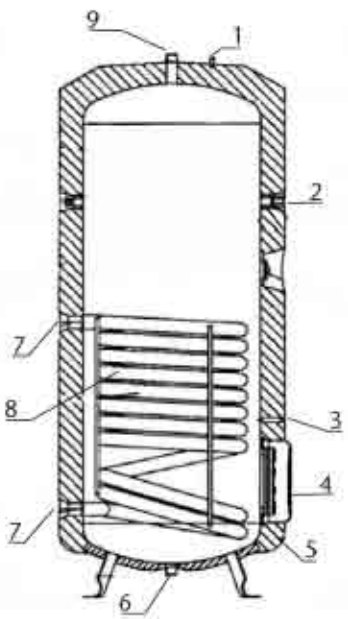

1 Sacrificial anode indicator
2 Thermometer
3 Well for temperature sensor (solar)
4 Clean-out port
5 Foam insulation
6 Cold water inlet
7 Heat exchanger ports (solar)
8 Exchanger coil (solar)
9 Hot water outlet

Note: heat exchangers are steel with porcelain enamel coating.

STIEBEL ELTRON

Dual Heat Exchanger Models

Technical Data

Type		SBB 300 Plus	SBB 400 Plus	SBB 600 Plus
Contents				
Storage capacity	Gal / ltr	80.6 / 305	108.6 / 411	162.9 / 617
Volume of heat exchanger, top	Gal / ltr	1.9 / 7.3	2.2 / 8.2	2.5 / 9.6
Volume of heat exchanger, bottom	Gal / ltr	2.7 / 10.1	2.9 / 11.3	3.5 / 13.2
Pressure				
Working pressure	PSI / bar	150 / 10	150 / 10	150 / 10
Tested to pressure	PSI / bar	217 / 15	217 / 15	217 / 15
Max. pressure of boiler loop	PSI / bar	150 / 10	150 / 10	150 / 10
Temperature				
Max. temperature solar loop	°F / °C	203 / 95	203 / 95	203 / 95
Max. temperature of boiler loop	°F / °C	203 / 95	203 / 95	203 / 95
Heat exchanger				
Surface area heat exchanger top	sq. inch / m^2	1706 / 1.1	2015 / 1.3	2945 / 1.9
Surface area heat exchanger bottom	sq. inch / m^2	2325 / 1.5	2635 / 1.7	3875 / 2.5
Weights				
Tank weight empty	lb. / kg	339 / 154	412 / 187	544 / 247
Tank weight full	lb. / kg	1,051 / 477	1,362 / 618	1,955 / 887
Other				
Standby losses in 24 hours	BTU / kWh	6,500 / 1.9	7,500 / 2.2	10,000 / 2.9
Cold/hot water connection		for 1" copper pipe with adapters, adapters provided with unit		
Dimensions				
Height with insulation	in. / mm	66.1 / 1679	72.7 / 1848	68.3 / 1735
Width with insulation	in. / mm	27.55 / 700	29.52 / 750	36.22 / 920 *

* Insulation is partially removeable to reduce width to 31.5" for clearance purposes

SBB 300 Plus, SBB 400 Plus and SBB 600 Plus models

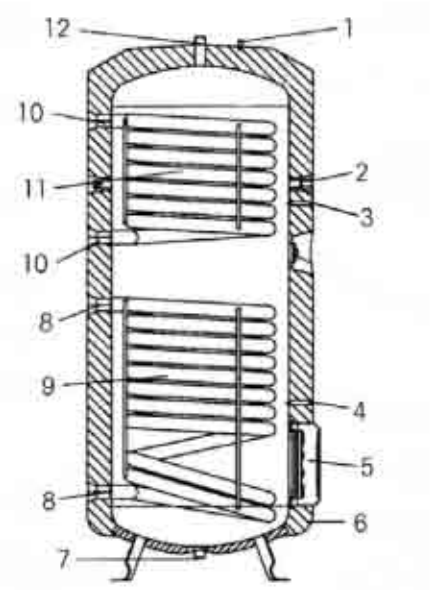

1 Sacrificial anode indicator
2 Thermometer
3 Well for temperature sensor (boiler)
4 Well for temperature sensor (solar)
5 Clean-out port
6 Foam insulation
7 Cold water inlet
8 Heat exchanger ports (solar)
9 Exchanger coil (solar)
10 Heat exchanger ports (boiler)
11 Exchanger coil (boiler)
12 Hot water outlet

Note: heat exchangers are steel with porcelain enamel coating.

Harvest the power of the Sun

Storage Tanks for Solar Applications

The Stiebel Eltron SB/SBB series water heaters are indirectly fired and are equipped with either one or two large heat exchangers. The heat exchangers are heavy gauge steel with procelain enamel coating.

The models with a single heat exchanger can be used for solar applications with some form of external backup heater. On the models with dual heat exchangers, the upper coil is typically connected to a space heating boiler fired by any fuel and the lower coil is connected to the solar panels.

All Stiebel Eltron SB/SBB series water heaters can also be used as high capacity indirectly fired water heaters in conjunction with any type of heating boiler.

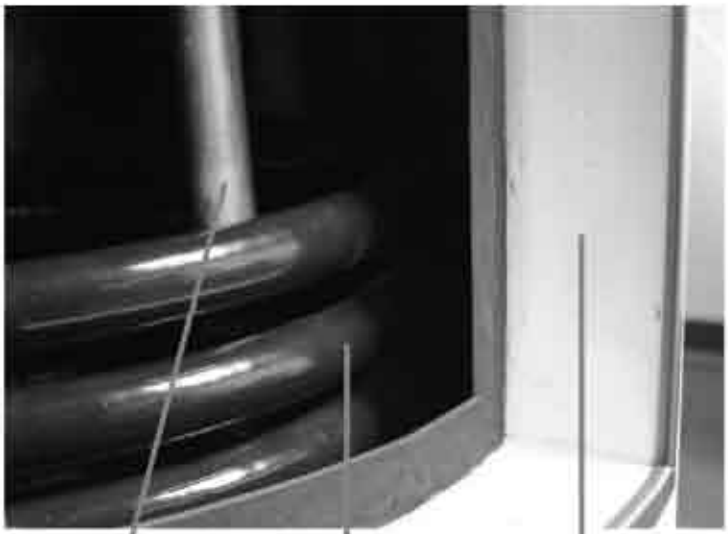

Stiebel Eltron Family of Products

Solar Panels

Tempra Tankless Water Heater

Stiebel Eltron is a world leader in the development of advanced water heating technology. We have pursued engineering excellence and high quality over a period of several decades.

Distributed by:

STIEBEL ELTRON, Inc.
17 West Street, West Hatfield, MA 01088
Phone (413) 247-3380 • (800) 582-8423
Fax: (413) 247-3369
E-mail: info@stiebel-eltron-usa.com
Please visit our web site at www.stiebel-eltron-usa.com

#41, 06

The coilex solution

Stainless Steel Indirect Water Heaters

Select coilex stainless indirect water heaters for maximum heating performance

Available in 7 different models

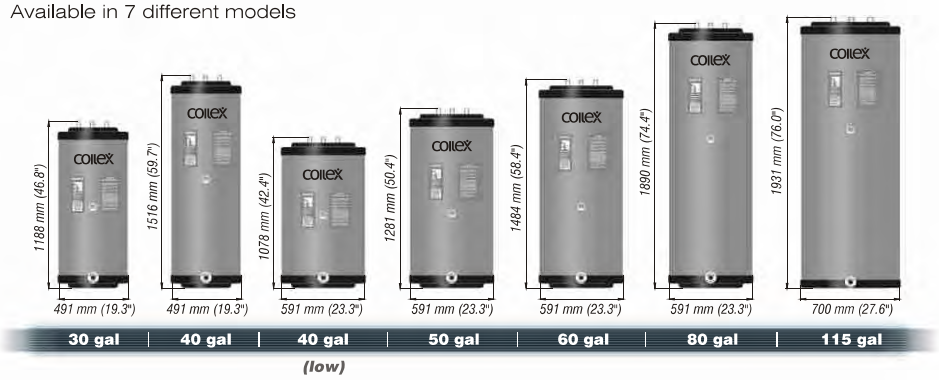

The high quality of the design and fabrication of our complete stainless steel heaters ensure efficient, maintenance-free operation and continuous supply of hot water. Turn to us for an economical and effective solution for all of your indirect water heater requirements.

These rugged units are designed for heating large volumes of domestic or process water for residential, commercial or industrial applications.

Characteristics	CX-30	CX-40	CX-40 (low)	CX-50	CX-60	CX-80	CX-115
Pump Capacity (gpm)	5	5	5	8	10	13	17
Loss in Feet	1.4	1.4	1.4	2.5	3.5	5.9	13
Capacity (gal)	30	40	40	50	60	80	115
Boiler Output (MBH)	75	85	85	100	125	175	225
Output (gal)							
First Hour	112	145	145	170	212	285	390
Continuous	91	115	115	135	167	233	300
Connections (inch)							
Domestic - MPT	3/4"	3/4"	3/4"	3/4"	3/4"	1"	1½"
Boiler - MPT	1"	1"	1"	1"	1"	1"	1"
Recirculation	-	-	-	-	-	3/4"	3/4"
Dimensions (inch)							
Diameter	19.3	19.3	23.3	23.3	23.3	23.3	27.6
Height	46.6	59.7	42.4	50.4	58.4	74.4	76
Shipping Weight (lbs)	65	80	80	95	110	140	180

Based on 90° rise with incoming water at 50°F and boiler temperature at 180°F.

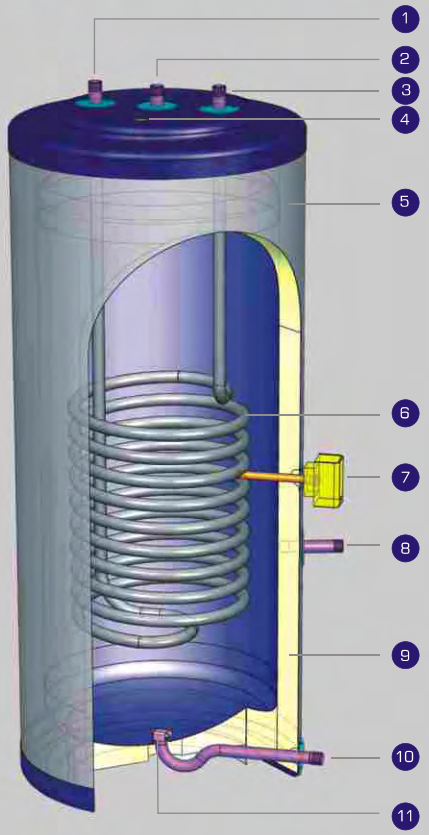

1	boiler water out
2	hot water outlet
3	boiler water in
4	temperature and pressure valve
5	polypropylene jacket
6	heating coil
7	aquastat control
8	recirculation
9	insulation
10	cold water inlet and drain
11	cold water diffuser

Our stainless steel indirect water heaters are ideal for use with any hydronic, radiant heat, and steam heating systems.

Uses Include:

- whirlpools, hot tubs, swimming pools
- radiant floor heating
- households with multiple bathrooms and appliances
- commercial and industrial institutions (hotels, apartments, schools, hospitals)

FOR INQUIRIES OR CUSTOMER SERVICE:

CALL 1-888-738-1350

Available Features with Coilex Indirect Water Heaters:

- Complete passivated 316L stainless steel constructions ensure reliability and durability of products
- Engineered single-coil, dual-coil, or custom-coil designs to increase heat transfer rates and equalize thermal distribution within the tanks
- Connections accessible from the side of the tank or through the top of the tank for ease of installation and use
- Units are fully drainable and flushable with the drain located in the bottom center
- Quick recovery rate for cost-effective operation
- Standard indirect water heaters available complete with aquastat
- Standard flame-retardant foam insulation to minimize heat loss and to protect the operator
- Compact, lightweight designs
- Easy to install, operate, and maintain

DOWFLAKE

77-80% CALCIUM CHLORIDE

General Description

DOWFLAKE* 77-80% calcium chloride is a flaked calcium chloride dihydrate product. DOWFLAKE 77-80% calcium chloride meets ASTM D 98 and AASHTO M144 requirements for calcium chloride purity. ASTM classification for DOWFLAKE 77-80% calcium chloride is “Type S; Grade 1, Class A.”

Applications

DOWFLAKE 77-80% calcium chloride is primarily used for dust control of unpaved roads and parking lots, and as a deicer.

Industrial applications include concrete acceleration, tire weighting, brine refrigeration systems, waste water treatment, and as a calcium source for chemical processing.

Many applications of DOWFLAKE 77-80% calcium chloride require the material to be put into solution. Typical properties of these solutions are found in Tables 1 & 2 on the back of this sheet.

Physical Properties

Appearance	White Flakes
Odor	None
Bulk Density	51-60 lbs. / cu. ft.
Sieve Analysis	0% > 3/8 inch 0-20% > #4 sieve 95-100% > #30 sieve

Availability

DOWFLAKE 77-80% calcium chloride is available in various package sizes and in bulk truck and bulk rail.

Typical Chemical Properties

Item	Limit	Unit
Calcium Chloride, min.	77.0	%
Total Alkali Salts (as NaCl), max.	4.3	%
Total Magnesium (as $MgCl_2$), max.	0.07	%
Other Impurities, max.	0.85	%
Calcium Hydroxide, max.	0.10	%
Calcium Carbonate, max.	0.07	%

Safety and Handling

For brief contact, no precautions other than clean body-covering clothing should be needed. Selection of specific items such as goggles, gloves, and apron will depend on the operation. Eye/face protection is recommended for dusty operations or when handling solutions.

Appropriate ventilation should be in place to keep atmospheric levels below industrial hygiene guidelines (Dow IHG for calcium chloride is 10 mg/cu. meter).

Rubber boots and gloves are recommended, due to the adverse effect of calcium chloride on leather.

Calcium chloride generates a great deal of heat when it is dissolved. Use cool (less than 80°F/26°C) water when making solutions.

Consult authorities for proper disposal information.

For full safety and handling details, contact The Dow Chemical Company for a current copy of the Material Safety Data Sheet for this product.

For more information contact The Dow Chemical Company Customer Information Center at 1-800-447-4369.

*Trademark of The Dow Chemical Company

Table 1—Typical Physical Properties of Solutions of DOWFLAKE 77-80% Calcium Chloride—English System

% $CaCl_2$	Approximate Specific Gravity @ 77°F	Weight (lbs./gal.) @ 77°F	Lbs. DOWFLAKE per Gal. Sol. @ 77°F	Gals. Solution per Ton DOWFLAKE @ 77°F	Lbs. DOWFLAKE per Gal. H_2O @ 77°F	Final Volume Gallons	Freezing Point (°F)
0	1.000	8.31	0	—	0	1.000	+32
10	1.090	9.06	1.16	1722	1.22	1.052	+20
11	1.100	9.14	1.29	1552	1.36	1.058	+18
12	1.110	9.22	1.42	1410	1.51	1.065	+16
13	1.120	9.31	1.55	1289	1.66	1.071	+14
14	1.129	9.38	1.68	1188	1.82	1.080	+12
15	1.139	9.47	1.82	1098	1.98	1.087	+10
16	1.149	9.55	1.96	1021	2.14	1.094	+8
17	1.159	9.63	2.10	953	2.32	1.104	+5
18	1.169	9.71	2.24	893	2.49	1.112	+2
19	1.179	9.80	2.39	838	2.68	1.121	-1
20	1.189	9.88	2.53	789	2.87	1.132	-4
21	1.199	9.96	2.68	746	3.06	1.142	-8
22	1.209	10.05	2.83	706	3.26	1.151	-12
23	1.219	10.13	2.99	670	3.48	1.169	-16
24	1.228	10.20	3.14	637	3.69	1.176	-20
25	1.240	10.30	3.30	606	3.92	1.187	-25
26	1.251	10.40	3.47	577	4.16	1.199	-31
27	1.263	10.50	3.63	550	4.40	1.210	-38
28	1.275	10.60	3.81	526	4.65	1.223	-46
29	1.287	10.69	3.97	503	4.92	1.238	-53
29.6	1.294	10.75	4.08	490	5.08	1.246	-60
30	1.298	10.79	4.15	482	5.19	1.251	-52
31	1.310	10.89	4.33	462	5.48	1.266	-34
32	1.322	10.99	4.51	444	5.78	1.282	-17
33	1.334	11.09	4.69	426	6.09	1.298	-4
34	1.345	11.18	4.87	410	6.42	1.318	+10
35	1.357	11.28	5.06	395	6.76	1.336	+20
36	1.369	11.38	5.25	381	7.12	1.356	+30
37	1.381	11.48	5.45	367	7.50	1.377	+39
38	1.392	11.57	5.64	355	7.89	1.400	+48
39	1.404	11.67	5.84	343	8.31	1.424	+55
40	1.416	11.77	6.04	331	8.75	1.449	+61
41	1.428	11.87	6.24	321	9.21	1.476	+65
42	1.439	11.96	6.44	311	9.70	1.506	+69
45	1.474	12.25	7.07	283	11.33	1.603	+78

Table 2—Typical Physical Properties of Solutions of DOWFLAKE 77-80% Calcium Chloride—Metric System

% $CaCl_2$	Approximate Specific Gravity @ 25°C	Weight (kg/liter) @ 25°C	Kgs. DOWFLAKE per liter Sol. @ 25°C	Liters Solution per Metric Ton DOWFLAKE @ 25°C	Kg DOWFLAKE per Liter H_2O @ 25°C	Final Volume Liters	Freezing Point (°C)
0	1.000	0.997	0.000	—	—	1.000	0
10	1.090	1.087	0.139	7177	0.147	1.052	-7
11	1.100	1.097	0.155	6466	0.164	1.058	-8
12	1.110	1.107	0.170	5873	0.181	1.064	-9
13	1.120	1.117	0.186	5373	0.199	1.071	-10
14	1.129	1.126	0.202	4950	0.218	1.079	-11
15	1.139	1.136	0.218	4579	0.237	1.086	-12
16	1.149	1.146	0.235	4256	0.257	1.094	-13
17	1.159	1.156	0.252	3971	0.278	1.103	-15
18	1.169	1.165	0.269	3718	0.299	1.112	-17
19	1.179	1.175	0.286	3492	0.321	1.122	-18
20	1.189	1.185	0.304	3290	0.344	1.132	-20
21	1.199	1.195	0.322	3107	0.367	1.141	-22
22	1.209	1.205	0.340	2941	0.392	1.153	-24
23	1.219	1.215	0.358	2790	0.417	1.164	-27
24	1.228	1.224	0.377	2655	0.443	1.176	-29
25	1.24	1.236	0.396	2524	0.470	1.187	-32
26	1.251	1.247	0.416	2405	0.499	1.200	-35
27	1.263	1.259	0.436	2294	0.528	1.211	-39
28	1.275	1.271	0.456	2191	0.558	1.223	-43
29	1.287	1.283	0.477	2096	0.590	1.237	-47
29.6	1.294	1.290	0.490	2043	0.610	1.246	-51
30	1.298	1.294	0.498	2009	0.623	1.252	-47
31	1.31	1.306	0.519	1926	0.658	1.267	-37
32	1.322	1.318	0.541	1849	0.694	1.283	-27
33	1.334	1.330	0.563	1777	0.731	1.299	-20
34	1.345	1.341	0.585	1711	0.770	1.318	-12
35	1.357	1.353	0.607	1647	0.812	1.337	-7
36	1.369	1.365	0.630	1587	0.855	1.357	-1
37	1.381	1.377	0.653	1531	0.900	1.378	4
38	1.392	1.388	0.676	1479	0.947	1.401	9
39	1.404	1.400	0.700	1429	0.997	1.424	13
40	1.416	1.412	0.724	1381	1.049	1.449	16
41	1.428	1.424	0.748	1336	1.105	1.476	18
42	1.439	1.435	0.773	1294	1.163	1.505	21
45	1.474	1.470	0.848	1179	1.360	1.603	26

Material Safety Data Sheet
The Dow Chemical Company

Product Name: DOWFLAKE* 77-80% Calcium Chloride (50 LB Bag)

Issue Date: 11/04/2005

Print Date: 05 Nov 2005

The Dow Chemical Company encourages and expects you to read and understand the entire (M)SDS, as there is important information throughout the document. We expect you to follow the precautions identified in this document unless your use conditions would necessitate other appropriate methods or actions.

1. Product and Company Identification

Product Name
DOWFLAKE* 77-80% Calcium Chloride (50 LB Bag)

COMPANY IDENTIFICATION
The Dow Chemical Company
2030 Willard H. Dow Center
Midland, MI 48674
USA

Customer Information Number: 800-258-2436

EMERGENCY TELEPHONE NUMBER
24-Hour Emergency Contact: 989-636-4400

2. Hazards Identification

Emergency Overview
Color: White
Physical State: Flakes
Odor: Odorless
Hazards of product:

WARNING! Causes eye irritation. May cause skin irritation. May be harmful if swallowed.

OSHA Hazard Communication Standard
This product is a "Hazardous Chemical" as defined by the OSHA Hazard Communication Standard, 29 CFR 1910.1200.

Potential Health Effects
Eye Contact: For dust: May cause severe eye irritation. May cause corneal injury. Effects may be slow to heal.
Skin Contact: Brief contact is essentially nonirritating to skin. Prolonged contact may cause skin irritation, even a burn. Not classified as corrosive to the skin according to DOT guidelines. May cause more severe response if skin is damp. May cause more severe response if skin is abraded (scratched or cut). May cause more severe response on covered skin (under clothing, gloves).

Skin Absorption: Prolonged skin contact is unlikely to result in absorption of harmful amounts.
Inhalation: Dust may cause irritation to upper respiratory tract (nose and throat). Vapors are unlikely due to physical properties.
Ingestion: Low toxicity if swallowed. Small amounts swallowed incidentally as a result of normal handling operations are not likely to cause injury; however, swallowing larger amounts may cause injury. Swallowing may result in gastrointestinal irritation or ulceration.
Effects of Repeated Exposure: The data presented are for the following material: Potassium chloride. In animals, effects have been reported on the following organs after ingestion: Gastrointestinal tract. Heart. Kidney. Dose levels producing these effects were many times higher than any dose levels expected from exposure due to use.

3. Composition Information

Component	CAS #	Amount
Calcium chloride	10043-52-4	> 77.0 %
Potassium chloride	7447-40-7	2.5 %
Sodium chloride	7647-14-5	1.5 %
Water	7732-18-5	< 19.0 %

4. First-aid measures

Eye Contact: Immediately flush eyes with water; remove contact lenses, if present, after the first 5 minutes, then continue flushing eyes for at least 15 minutes. Obtain medical attention without delay, preferably from an ophthalmologist.
Skin Contact: Wash skin with plenty of water.
Inhalation: Move person to fresh air; if effects occur, consult a physician.
Ingestion: Do not induce vomiting. Give one cup (8 ounces or 240 ml) of water or milk if available and transport to a medical facility. Do not give anything by mouth to an unconscious person.
Notes to Physician: Due to irritant properties, swallowing may result in burns/ulceration of mouth, stomach and lower gastrointestinal tract with subsequent stricture. Aspiration of vomitus may cause lung injury. Suggest endotracheal/esophageal control if lavage is done. If burn is present, treat as any thermal burn, after decontamination. No specific antidote. Treatment of exposure should be directed at the control of symptoms and the clinical condition of the patient.

5. Fire Fighting Measures

Extinguishing Media: This material does not burn. If exposed to fire from another source, use suitable extinguishing agent for that fire.
Fire Fighting Procedures: Keep people away. Isolate fire and deny unnecessary entry. This material does not burn. Fight fire for other material that is burning. Water should be applied in large quantities as fine spray.
Special Protective Equipment for Firefighters: Wear positive-pressure self-contained breathing apparatus (SCBA) and protective fire fighting clothing (includes fire fighting helmet, coat, trousers, boots, and gloves). Avoid contact with this material during fire fighting operations. If contact is likely, change to full chemical resistant fire fighting clothing with self-contained breathing apparatus. If this is not available, wear full chemical resistant clothing with self-contained breathing apparatus and fight fire from a remote location. For protective equipment in post-fire or non-fire clean-up situations, refer to the relevant sections.
Unusual Fire and Explosion Hazards: Heat is generated when product mixes with water.
Hazardous Combustion Products: Not applicable.

6. Accidental Release Measures

Steps to be Taken if Material is Released or Spilled: Small and large spills: Contain spilled material if possible. Collect in suitable and properly labeled containers. Flush residue with plenty of water. See Section 13, Disposal Considerations, for additional information.
Personal Precautions: Isolate area. Keep unnecessary and unprotected personnel from entering the area. Use appropriate safety equipment. For additional information, refer to Section 8, Exposure Controls and Personal Protection. Refer to Section 7, Handling, for additional precautionary measures.
Environmental Precautions: Prevent from entering into soil, ditches, sewers, waterways and/or groundwater. See Section 12, Ecological Information.

7. Handling and Storage

Handling

General Handling: Heat developed during diluting or dissolving is very high. Use cool water when diluting or dissolving (temperature less than 80°F, 27°C). Avoid contact with eyes, skin, and clothing. Do not swallow. Wash thoroughly after handling. Keep container closed. See Section 8, EXPOSURE CONTROLS AND PERSONAL PROTECTION.

Storage

Store in a dry place. Protect from atmospheric moisture.

8. Exposure Controls / Personal Protection

Exposure Limits

Component	List	Type	Value
Calcium chloride	Dow IHG	TWA	10 mg/m3

Personal Protection

Eye/Face Protection: Use safety glasses. For dusty operations or when handling solutions of the material, wear chemical goggles.
Skin Protection: Wear clean, body-covering clothing.

Hand protection: Use gloves chemically resistant to this material. If hands are cut or scratched, use gloves chemically resistant to this material even for brief exposures. Examples of preferred glove barrier materials include: Neoprene. Polyvinyl chloride ("PVC" or "vinyl"). Nitrile/butadiene rubber ("nitrile" or "NBR"). NOTICE: The selection of a specific glove for a particular application and duration of use in a workplace should also take into account all relevant workplace factors such as, but not limited to: Other chemicals which may be handled, physical requirements (cut/puncture protection, dexterity, thermal protection), potential body reactions to glove materials, as well as the instructions/specifications provided by the glove supplier.

Respiratory Protection: Atmospheric levels should be maintained below the exposure guideline. When respiratory protection is required for certain operations, use an approved air-purifying respirator. In dusty or misty atmospheres, use an approved particulate respirator. The following should be effective types of air-purifying respirators: Particulate filter.
Ingestion: Use good personal hygiene. Do not consume or store food in the work area. Wash hands before smoking or eating.

Engineering Controls

Ventilation: Provide general and/or local exhaust ventilation to control airborne levels below the exposure guidelines.

9. Physical and Chemical Properties

Physical State	Flakes
Color	White
Odor	Odorless
Flash Point - Closed Cup	Not applicable
Flammable Limits In Air	**Lower**: Not applicable **Upper**: Not applicable
Autoignition Temperature	Not applicable
Vapor Pressure	1.0 mmHg @ 25 °C *Literature*
Boiling Point (760 mmHg)	Not applicable
Vapor Density (air = 1)	Not applicable
Specific Gravity (H2O = 1)	Not applicable
Bulk Density	51 - 60 lb/ft3 *Estimated*
Freezing Point	Not applicable
Melting Point	174 °C (345 °F) *Literature* (Approx.)
Solubility in Water (by weight)	readily soluble
pH	Not applicable
Kinematic Viscosity	Not applicable

10. Stability and Reactivity

Stability/Instability
Stable. Hygroscopic.
Conditions to Avoid: None known. Avoid moisture.

Incompatible Materials: Heat is generated when mixed with water. Spattering and boiling can occur. Avoid contact with: Sulfuric acid. Corrosive when wet. Flammable hydrogen may be generated from contact with metals such as: Zinc. Sodium.

Hazardous Polymerization
Will not occur.

Thermal Decomposition
Does not decompose.

11. Toxicological Information

Acute Toxicity
Ingestion
For the major component(s): LD50, Rat 900 - 2,100 mg/kg
Skin Absorption
For the major component(s): LD50, Rabbit > 5,000 mg/kg
Repeated Dose Toxicity
The data presented are for the following material: Potassium chloride. In animals, effects have been reported on the following organs after ingestion: Gastrointestinal tract. Heart. Kidney. Dose levels producing these effects were many times higher than any dose levels expected from exposure due to use.
Developmental Toxicity
For the major component(s): Did not cause birth defects or any other fetal effects in laboratory animals.
Genetic Toxicology

The data presented are for the following material: Calcium chloride or CaCl2. In vitro genetic toxicity studies were negative. The data presented are for the following material Potassium chloride. In vitro genetic toxicity studies were positive. However, the relevance of this to humans is unknown.

12. Ecological Information

CHEMICAL FATE

Data for Component: **Calcium chloride**

Movement & Partitioning

No bioconcentration is expected because of the relatively high water solubility. Partitioning from water to n-octanol is not applicable.

Persistence and Degradability

Biodegradation is not applicable.

Data for Component: **Potassium chloride**

Movement & Partitioning

Partitioning from water to n-octanol is not applicable.

Persistence and Degradability

Biodegradation is not applicable.

Data for Component: **Sodium chloride**

Movement & Partitioning

No bioconcentration is expected because of the relatively high water solubility. Potential for mobility in soil is very high (Koc between 0 and 50). Partitioning from water to n-octanol is not applicable.

Persistence and Degradability

Biodegradation is not applicable.

ECOTOXICITY

Data for Component: **Calcium chloride**

Material is practically non-toxic to aquatic organisms on an acute basis (LC50/EC50 >100 mg/L in the most sensitive species tested).

Fish Acute & Prolonged Toxicity

LC50, bluegill (Lepomis macrochirus): 8,350 - 10,650 mg/l

Aquatic Invertebrate Acute Toxicity

LC50, water flea Daphnia magna: 759 - 3,005 mg/l

Toxicity to Micro-organisms

EC50; activated sludge, respiration inhibition: > 1,000 mg/l

Data for Component: **Potassium chloride**

Material is practically non-toxic to aquatic organisms on an acute basis (LC50/EC50 >100 mg/L in the most sensitive species tested).

Fish Acute & Prolonged Toxicity

LC50, rainbow trout (Oncorhynchus mykiss), 96 h: 4,236 mg/l

Aquatic Invertebrate Acute Toxicity

EC50, water flea Daphnia magna, 24 h, immobilization: 590 mg/l

Data for Component: **Sodium chloride**

Material is practically non-toxic to aquatic organisms on an acute basis (LC50/EC50 >100 mg/L in the most sensitive species tested).

Fish Acute & Prolonged Toxicity

LC50, fathead minnow (Pimephales promelas): 10,610 mg/l

Aquatic Invertebrate Acute Toxicity

LC50, water flea Daphnia magna: 4,571 mg/l

Toxicity to Micro-organisms

IC50, OECD 209 Test; activated sludge, respiration inhibition: > 1,000 mg/l

13. Disposal Considerations

All disposal practices must be in compliance with all Federal, State/Provincial and local laws and regulations. Regulations may vary in different locations. Waste characterizations and compliance with applicable laws are the responsibility solely of the waste generator. DOW HAS NO CONTROL OVER THE MANAGEMENT PRACTICES OR MANUFACTURING PROCESSES OF PARTIES HANDLING OR USING THIS MATERIAL. THE INFORMATION PRESENTED HERE PERTAINS ONLY TO THE PRODUCT AS SHIPPED IN ITS INTENDED CONDITION AS DESCRIBED IN MSDS SECTION: Composition Information. FOR UNUSED & UNCONTAMINATED PRODUCT, the preferred options include sending to a licensed, permitted: Reclaimer. Landfill. Waste water treatment system. As a service to its customers, Dow can provide names of information resources to help identify waste management companies and other facilities which recycle, reprocess or manage chemicals or plastics, and that manage used drums. Telephone Dow's Customer Information Group at 1-800-258-2436 or 1-989-832-1556 (U.S.), or 1-800-331-6451 (Canada) for further details.

14. Transport Information

DOT Non-Bulk

NOT REGULATED

DOT Bulk

NOT REGULATED

IMDG

NOT REGULATED

ICAO/IATA

NOT REGULATED

This information is not intended to convey all specific regulatory or operational requirements/information relating to this product. Additional transportation system information can be obtained through an authorized sales or customer service representative. It is the responsibility of the transporting organization to follow all applicable laws, regulations and rules relating to the transportation of the material.

15. Regulatory Information

OSHA Hazard Communication Standard

This product is a "Hazardous Chemical" as defined by the OSHA Hazard Communication Standard, 29 CFR 1910.1200.

Superfund Amendments and Reauthorization Act of 1986 Title III (Emergency Planning and Community Right-to-Know Act of 1986) Sections 311 and 312

Immediate (Acute) Health Hazard	Yes
Delayed (Chronic) Health Hazard	No
Fire Hazard	No
Reactive Hazard	No
Sudden Release of Pressure Hazard	No

Superfund Amendments and Reauthorization Act of 1986 Title III (Emergency Planning and Community Right-to-Know Act of 1986) Section 313
To the best of our knowledge, this product does not contain chemicals at levels which require reporting under this statute.

Pennsylvania (Worker and Community Right-To-Know Act): Pennsylvania Hazardous Substances List and/or Pennsylvania Environmental Hazardous Substance List:
To the best of our knowledge, this product does not contain chemicals at levels which require reporting under this statute.

Pennsylvania (Worker and Community Right-To-Know Act): Pennsylvania Special Hazardous Substances List:
To the best of our knowledge, this product does not contain chemicals at levels which require reporting under this statute.

California Proposition 65 (Safe Drinking Water and Toxic Enforcement Act of 1986)
This product contains no listed substances known to the State of California to cause cancer, birth defects or other reproductive harm, at levels which would require a warning under the statute.

US. Toxic Substances Control Act
All components of this product are on the TSCA Inventory or are exempt from TSCA Inventory requirements under 40 CFR 720.30

16. Other Information

Recommended Uses and Restrictions
Snow and ice melting. Dust Control For industrial use.

Revision
Identification Number: 50106 / 1001 / Issue Date 11/04/2005 / Version: 2.0
Most recent revision(s) are noted by the bold, double bars in left-hand margin throughout this document.

Legend

N/A	Not available
W/W	Weight/Weight
OEL	Occupational Exposure Limit
STEL	Short Term Exposure Limit
TWA	Time Weighted Average
ACGIH	American Conference of Governmental Industrial Hygienists, Inc.
DOW IHG	Dow Industrial Hygiene Guideline
WEEL	Workplace Environmental Exposure Level
HAZ_DES	Hazard Designation

The Dow Chemical Company urges each customer or recipient of this (M)SDS to study it carefully and consult appropriate expertise, as necessary or appropriate, to become aware of and understand the data contained in this (M)SDS and any hazards associated with the product. The information herein is provided in good faith and believed to be accurate as of the effective date shown above. However, no warranty, express or implied, is given. Regulatory requirements are subject to change and may differ between various locations. It is the buyer's/user's responsibility to ensure that its activities comply with all federal, state, provincial or local laws. The information presented here pertains only to the product as shipped. Since conditions for use of the product are not under the control of the manufacturer, it is the buyer's/user's duty to determine the conditions necessary for the safe use of this product. Due to the proliferation of sources for information such as manufacturer-specific (M)SDSs, we are not and cannot be responsible for (M)SDSs obtained from any source other than ourselves. If you have

ar
about Wa
Pow

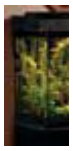

Proper F
Water P
Water P Guide
More...

FISH Categories:

Water Pumps & Powerheads

Powerheads
Water Pumps

2 WEEK SALE
NEW PRODUCTS
SALE ITEMS
CLEARANCE PRODUCTS
LiveAquaria Deliveries

Air Pumps & Accessories
Aquariums & Furniture
Books, Videos & Audio
Calcium, Kalkwasser & Calcium Reactors
Chillers
CO2 Systems & Accessories
Conditioners & Additives
Controllers & Monitors
Decor
Feeders
Filters
Filter Media
Foods
Gift Ideas
Heaters
Hydrometers, Refractometers
Lighting
Maintenance
Medications
Parts Department
Planted Aquarium Supplies
Plumbing Supplies
Protein Skimmers
Reef Care
RO & Deionization
Salt Mixes
Substrates
Testing Equipment
Thermometers
UV Sterilizers
Vitamins & Supplements
Water Pumps & Powerheads
Wave Makers

Customer Service Help Desk
1-800-381-7179

ViaAqua Water Pumps

LARGER VIEW SEND TO A FRIEND

MORE INFORMATION READ TESTIMONIALS

* **Economical, state-of-the-art water pumps**
* **Fully submersible design**
* **Quiet running**
* **Oil-free motor**

Pumps up to 1,321 gph - now that's power! Fully submersible multi-purpose pumps for circulating water, draining and filling aquarium, powering waterfalls, or operating wet/dry filters and skimmers. Oil-free motor helps keep aqaurium free of harmful contaminants. Quiet running, highly efficient motor keeps background noise to a minimum. Must be submerged at all times. Includes gravel filter adapter, standard hose tubing adapters, suction cups, elbow, directional flare nozzle, intake strainer, control valve with venturi, and discharge adapter.

Model	Dimensions	Max head	gph	Inlet (FTP)	Outlet (MTP)	Watts
180	2-1/4" x 1-1/4" x 1-3/4"	2 ft	80	*	1/2" slip	5
360	3" x 2" x 1-3/4"	3 ft	152	*	1/2" slip	8
480	3" x 2-1/2" x 1-7/8"	4 ft	200	*	1/2" slip	11
1300	4-1/2" x 2-1/4" x 3"	6 ft	370	3/4" barbed	3/4" barbed	31-1/2
1800	6" x 2-1/2" x 3-1/2"	6 ft	480	3/4" barbed	3/4" barbed	28
2300	6-1/4" x 2-1/2" x 3-1/3"	7 ft	600	3/4" barbed	3/4" barbed	41

Magnetic Drive

Little GIANT® Pump Company

3-MD-MT-HC

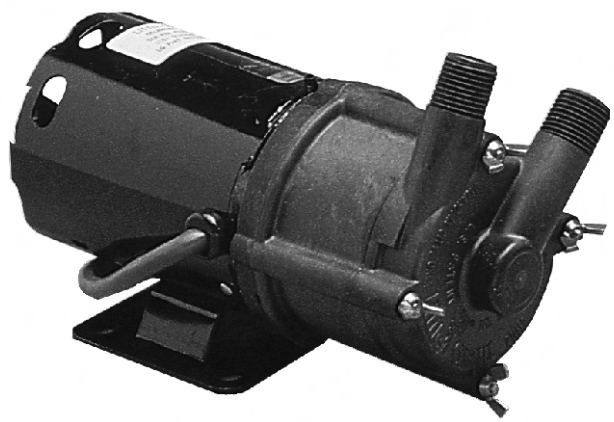

Features

Thermally Protected, Open, Fan-Cooled Motor

Sleeve Bearings

6' Power Cord with 3-Prong Plug

Specific Gravity to 1.1

Fluid Temperature to 200 Degrees F.

Ambient Air Temperature to 77 Degrees F.

Run-dry capability up to 8 hours

NOTE: Consult your local distributor or the factory for applications with higher ambient temperatures, specific gravities and viscosities.

Construction

Volute — Glass-filled Ryton®

Housing — Glass-filled Ryton®

Impeller — Glass-filled Ryton® w/Carbon Bushing

Shaft — Ceramic

Thrust Washers — Ceramic

O-Ring — Viton®

The Little Giant MD-HC series features leakproof, seal-less magnetic drives and are designed for in-line, non-submersible use. Volute, magnet housing and impeller are glass-filled Ryton® for excellent chemical resistance. Ceramic shaft and thrust washers are 99.5% pure alumina for excellent wear and trouble-free service. Pumping heads are easily rotated, cleaned or serviced with no special tools required. Spindle shaft is supported at both ends to prevent impeller damage during start-up and stop of pump.

Little Giant Pump Co.

3-MD-MT-HC

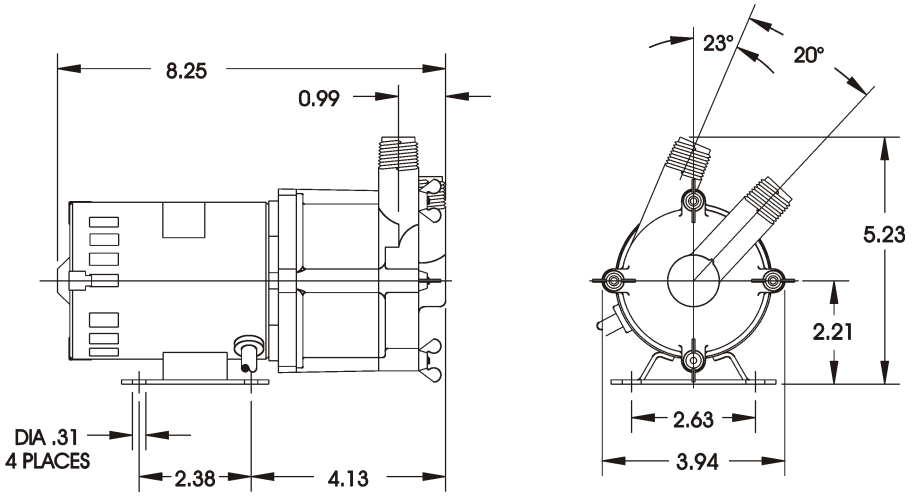

NOTE: Designs and dimensions may vary for various reasons (i.e. type of motor). This information should be used as general guide rather than an unqualified guarantee. Specifications are subject to change without prior notice.

Specifications

Model No.	Item No.	Intake	Discharge	Listing(s)	HP	Volts	Hertz	Amps	Watts	Performance (GPM @ Head) 1'	3'	6'	9'	15'	Shut Off Feet	PSI	Pwr. Cord (ft)	Weight (Lbs.)
3-MD-MT-HC	578603	1/2" MNPT	1/2" MNPT	UR/C-CSA	1/25	115	60	1.3	94	8.3	7.6	7.1	5.9	1.7	16.2	7.0	6	7.20
3-MD-MT-HC	578697	1/2" MNPT	1/2" MNPT	PUMP HEAD LESS MOTOR (Without Base)														2.00

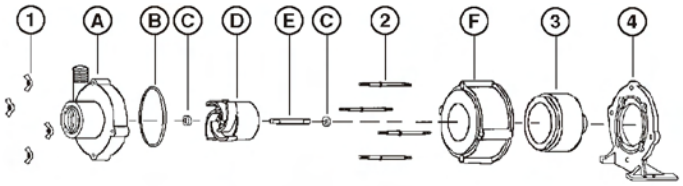

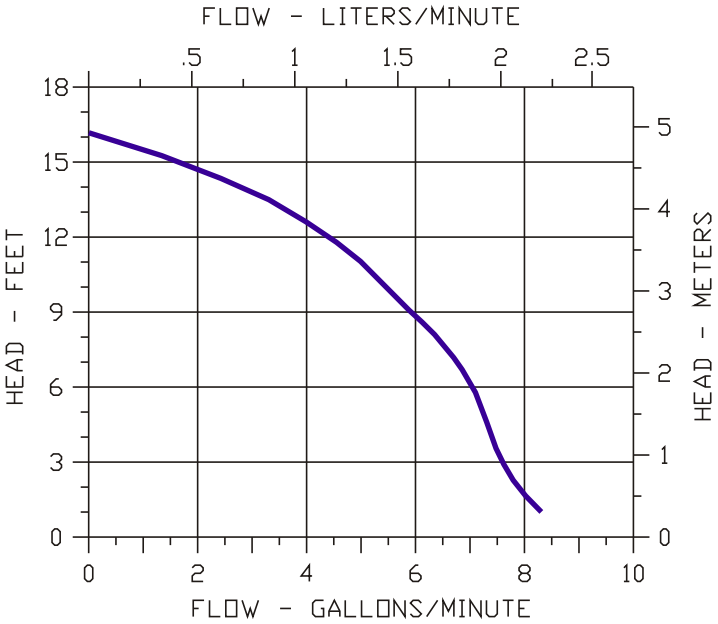

Replacement Parts

ITEM	PART NO.	DESCRIPTION
A	181202	Volute
B	924008	O-Ring
C	921077	Thrust Washer
D	181142	Impeller
E	180059	Shaft
F	180005	Housing
1	920003	Wing nut
2	911403	Stud, Collared
3	180602	Drive Magnet
4	180048	Mtg. Bracket without Base

Note: Parts A-F Contact Fluid.

Little Giant Pump Co.
PO Box 12010 • Oklahoma City, OK 73157
Phone: 405.947.2511 • Fax: 405.228.1550
E-mail: customerservice@littlegiant.com

GRAINGER
FOR THE ONES WHO GET IT DONE

Print *printed* August 3, 2007

Pump,Circulator,1/40hp

Hot Water Circulator Pump, Power Rating 1/40 HP, Pump Body Material Bronze, Impeller Non Metallic, Voltage Rating 115 Volts, Phase Single, Full Load Current 0.52 Amp, Thermal Protection Impedance, Maximum Temperature 220 Degrees Fahrenheit, Face 4 13/32 Inches, Inlet/Outlet 3/4 Inch FNPT Threaded, Flow @ 2 Feet of Head 10 GPM, Flow @ 3 Feet of Head 9 GPM, Flow @ 4 Feet of Head 8.5 GPM, Flow @ 5 Feet of Head 7.5 GPM

Grainger Item #	5P429
Price (ea.)	**$143.60**
Brand	TACO
Mfr. Model #	006-BT4-1
Ship Qty.	1
Sell Qty. (Will-Call)	1
Ship Weight (lbs.)	5.05
Usually Ships	Today
Catalog Page No.	2802

Price shown may not reflect your price. Log in or register.

Additional Info

Hot Water Circulating Pumps

Replaceable cartridge contains all moving parts; allows circulator to be serviced instead of replacing entire pump.

3250 RPM motor is self-lubricating and impedance-protected; contains no mechanical seal and requires no maintenance. Pumps feature nonmetallic impeller, ceramic shaft, and carbon bearings.

- Compact, low power consumption design
- Quiet direct-drive split capacitor motor
- Max. working pressure: 125 psi

Nos. 4PC85, 4PC86, 4PC87, and 5P429 through 5P432

Used for domestic hot water circulation, heat recovery units, water source heat pumps, drain down, open loop solar systems, and potable water systems.

Tech Specs

Item: Circulator Pump
Type: Hot Water
HP: 1/40
Phase: 1
Voltage: 115
Amps: 0.52
Inlet/Outlet: 3/4 FNPT
Impeller Material: Nonyl (R)

Optional Accessories

Isolation Flange,Pk 2

Item #: 4JA91
Brand: BELL & GOSSETT
Usually Ships: Today
Price (ea): $29.80

Impeller Material: Noryl (R)

Housing Material: Bronze
Thermal Protection: Impedance
Face to Face Dimension (In.): 4 13/32
Max. Temp. (F): 220
GPM of Water @ 1 Ft. of Head: 10.5
GPM of Water @ 2 Ft. of Head: 10
GPM of Water @ 3 Ft. of Head: 9
GPM of Water @ 4 Ft. of Head: 8.5
GPM of Water @ 5 Ft. of Head: 7.5
GPM of Water @ 6 Ft. of Head: 6.5
GPM of Water @ 7 Ft. of Head: 5
GPM of Water @ 8 Ft. of Head: 3.5
GPM of Water @ 9 Ft. of Head: 2
Length (In.): 5 5/8
Width (In.): 3 5/16
Shut-Off (Ft.): 9.5
Drive Type: Direct
Max. Working Pressure (PSI): 145
Construction: 30 Percentage Glass-filled Polyether Sulfone
FPT (In.): 3/4

Notes & Restrictions

Note: Do not use cast-iron pumps for potable water service.

MSDS

This item does not require a **Material Safety Data Sheet (MSDS).**

Required Accessories

Sealant Tape,1/2 x 260 In

Item #: 4X227
Brand: ANTI-SEIZE
Usually Ships: Today
Price (ea): $1.32

Isolation Flange,Pk 2

Item #: 4JA92
Brand: BELL & GOSSETT
Usually Ships: Today
Price (ea): $37.85

Isolation Flange,Pk 2

Item #: 4JA93
Brand: BELL & GOSSETT
Usually Ships: Today
Price (ea): $46.10

Isolation Flange,Pk 2

Item #: 4JA96
Brand: BELL & GOSSETT
Usually Ships: Today
Price (ea): $29.80

Isolation Flange,Pk 2

Item #: 4JA97
Brand: BELL & GOSSETT
Usually Ships: Today
Price (ea): $36.50

Isolation Flange,Pk 2

Item #: 4JA98
Brand: BELL & GOSSETT
Usually Ships: Today
Price (ea): $47.05

Alternate Products

There are currently no alternate products for this item.

Repair Parts

A Repair Part may be available for this item. Visit our Repair Parts Center or contact your local branch for more information.

UltimateAir®
RecoupAerator®

Whole-house ventilation and filtration

Standard Features

95% Efficiency

Self-balancing

Reliable, low maintenance

Variable speed control

Multi-function timer

Patented design

GM ECM brushless motors

Merv 12 filtration + aluminum pre-filter

Frost prevention

No drain

Humidity regulation without desiccants

Economic Cooling mode

5-year Warranty

Award-winner for energy efficiency, design and easy install

Filters/ core material: Easily washable/replaceable high filtration polymer material.

Case: 16 and 20 Gauge powder coated steel.

Controls: Standard, remote located, low voltage, variable speed wall controller. Standard 0-10 vds input control. Standard furnace input control.

EconoCool: To perform night time cooling / home air flush

Options:
PressureGuard: To control indoor pressure real-time
Co2 Guard: To automate ventilation with the increase in occupancy
HEPA: Add on HEPA filtration package

Boost Inputs: To boost ventilation using a bathroom switch

Mounting: Four rubber feet to set on a horizontal surface, or four metal D-rings for hanging from ceiling joinsts.

Weight: 72 lbs. Shipped weight: 80 lbs.

Certification:
All units are ETL certified to UL 1812. Third party performance testing done by Bodycote Materials Testing, Mississauga Ontario, Canada and by the Maryland Aviation Administration.

Variable air exchange rate:	60 - 210 cfm
Temperature effectiveness at full flow:	up to 95%
Latent efficiency (max):	88%
Dimensions:	25"H X 19"W X 25"D
Filter class of core material:	MERV 12
Pre-filter:	Washable aluminum mesh
Heat exchange material:	Washable polyester fiber
Duct connections:	6 inch
Certifications:	HVI, CE
Avg. electrical consumption	210 cfm = 200W
	60 cfm = 34W
Motor option	GE ECM 84 mm
Electrical	120 VAC / 5Amp

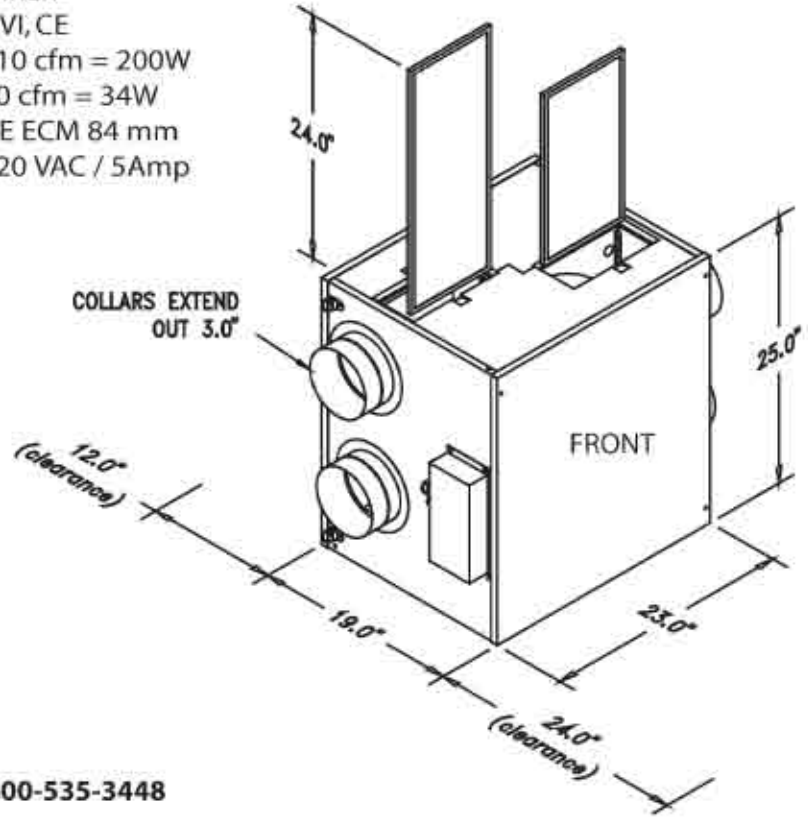

178 Mil Street, Athens, OH 45701
www.ultimateair.com / info@ultimateair.com / 800-535-3448

ICC Evaluation Service, Inc.
www.icc-es.org

Business/Regional Office ■ 5360 Workman Mill Road, Whittier, California 90601 ■ (562) 699-0543
Regional Office ■ 900 Montclair Road, Suite A, Birmingham, Alabama 35213 ■ (205) 599-9800
Regional Office ■ 4051 West Flossmoor Road, Country Club Hills, Illinois 60478 ■ (708) 799-2305

DIVISION: 06—WOOD AND PLASTICS
Section: 06160—Sheathing

REPORT HOLDER:

WARMBOARD, INC.
8035 SOQUEL DRIVE
APTOS, CALIFORNIA 95003
(831) 685-9276
www.warmboard.com
alsberg@warmboard.com

EVALUATION SUBJECT:

WARMBOARD™ RADIANT-FLOOR HEATING PANEL

1.0 EVALUATION SCOPE

Compliance with the following codes:

- 2003 *International Building Code*® (IBC)
- 2003 *International Residential Code*® (IRC)
- 1997 *Uniform Building Code*™ (UBC)

Properties evaluated:

- Span rating
- Diaphragm construction

2.0 USES

Subfloor sheathing to accommodate radiant floor tubing.

3.0 DESCRIPTION

3.1 General:

Warmboard™ radiant-floor heating panels are used as subfloor sheathing, and have grooves to accommodate radiant-floor tubing. Warmboard™ panels are manufactured from APA-rated Sturd-I-Floor plywood. The panels have a nominal thickness of $1^3/_{32}$ inches (27.78 mm) and an actual thickness of 1.075 inches (27.3 mm). The panels are 4 feet by 8 feet (1219 mm by 2438 mm) and have tongue-and-groove edges. One face of each panel has channel grooves routed into the face surface, to accommodate radiant-floor tubing. Grooves are approximately 0.68 inch (17.3 mm) deep and 0.68 inch (17.3 mm) wide, and are spaced 12 inches (305 mm) on center, parallel to the length of the panel. Nine inches (229 mm) from the panel edge, the grooves bend at 90 degrees and 180 degrees to permit the radiant-floor tubing to return to the field of the panel. Panels have an overlay of 0.025-inch-thick (0.64 mm) aluminum bonded to the grooved surface.

4.0 DESIGN

4.1 Allowable Spans and Loads:

Warmboard™ is a wood structural panel meeting the requirements of IBC Section 2303.1.4, IRC Section R503.2 and UBC Standard 23-3, DOC PS-2, and Section 2312 of the UBC. The panel single-floor span rating is 24 inches (610 mm) on center. The span rating applies to panels at least 24 inches (610 mm) wide. The allowable total and live loads at the maximum 24-inch (610 mm) span are 110 psf (5.3 kN/m^2) and 100 psf (4.2 kN/m^2), respectively. The span rating and allowable loads are based on panels installed with the grooves perpendicular to the joists. Panels shall be installed with grooves perpendicular to the joists.

4.2 Allowable Diaphragm Values:

Warmboard™ panels used in horizontal diaphragms may be used to resist horizontal forces not exceeding those set forth in Table 1 of this report. The general requirements for horizontal diaphragms specified in IBC Sections 2306 and 2307, and UBC Section 2315.1, are applicable to Warmboard™ panels.

4.3 Installation:

The dimension of the framing member to which the Warmboard™ panel is attached shall be at least 2 inches (nominal). Panel edges shall be butted together and centered over the framing members. Nails shall be placed not less than $^3/_8$ inch (9.5 mm) in from the panel edge; shall be spaced not more than 6 inches (152 mm) on center along panel edge bearings; and shall be firmly driven into the framing members. A floor finish material recommended by Warmboard, Inc., shall be installed over the Warmboard™ panel.

5.0 CONDITIONS OF USE

The Warmboard™ radiant-floor heating panel described in this report complies with, or is a suitable alternative to what is specified in, those codes listed in Section 1.0 of this report, subject to the following conditions:

5.1 The Warmboard™ panels are limited to use as structural subflooring or as combined subfloor underlayment.

5.2 The panels are installed in accordance with this report.

5.3 Allowable spans, loads and diaphragm capacities comply with this report.

5.4 The panels are manufactured for Warmboard™ in Willits, California, under a quality control program with inspections by APA—The Engineered Wood Association (AA-649).

6.0 EVIDENCE SUBMITTED

6.1 Data in accordance with UBC Standard 23-3 and DOC PS-2.

6.2 A quality control manual.

7.0 IDENTIFICATION

Each panel shall bear a stamp identifying the evaluation report holder (Warmboard, Inc.), product name, span rating, nominal panel thickness, Exposure 1 rating, evaluation report number (ESR-1421), and inspection agency (APA—The Engineered Wood Association). See Figure 2 for details.

TABLE 1—ALLOWABLE SHEAR (in pounds per foot) FOR HORIZONTAL WOOD STRUCTURAL WARMBOARD™ PANEL DIAPHRAGMS WITH FRAMING OF DOUGLAS FIR-LARCH OR SOUTHERN PINE[1]

PANEL GRADE	COMMON NAIL SIZE	MINIMUM NAIL PENETRATION INTO FRAMING (inches)	MINIMUM NOMINAL PANEL THICKNESS (inches)	MINIMUM NOMINAL WIDTH OF FRAMING MEMBER (inches)	BLOCKED DIAPHRAGMS				UNBLOCKED DIAPHRAGMS	
					Nail Spacing at Diaphragm Boundaries (all cases), at Continuous Panel Edges Parallel to Load (Cases 3 and 4), and at all Panel Edges (Cases 5 and 6)				Nails Spaced a Maximum of 6 Inches at Supported Edges	
					× 25.4 for mm				Case 1 (No unblocked edges or continuous joints parallel to load)	All other configurations (Cases 2, 3, 4, 5 and 6)
					6 inches	4 inches	$2^1/_2$ inches[2]	2 inches[2]		
					Nail spacing at other panel edges					
					× 25.4 for mm					
					6 inches	6 inches	4 inches	3 inches		
		× 25.4 for mm			× 0.0146 for N/mm					
Warmboard	10d	$1^5/_8$	$1^3/_{32}$	2	320	425	640	730	285	215
				3	360	480	720	820	320	240

For **SI:** 1 inch = 25.4 mm, 1 pound/foot = 14.6 N/m.

[1]These values are for short-term loads due to wind or earthquake and shall be reduced 25 percent for normal loading. Space nails 12 inches on center along intermediate framing members. For framing of other species: (1) Find specific gravity fo species of lumber in AFPA National Design Specification. (2) Find shear value from table above for nail size for actual grade and multiply value by the following adjustment factor: Specific Gravity Adjustment Factor = [1-(0.5-SG)], where SG = Specific Gravity of the framing member. This adjustment factor shall not be greater than 1.

[2]Framing at adjoining panel edges shall be 3 inches nominal or wider, and nails shall be staggered where nails are spaced 2 inches or $2^1/_2$ inches on center.

[3]Framing at adjoining panel edges shall be 3 inches nominal or wider, and nails shall be staggered where 10d nails having penetration of more than $1^5/_8$ inches into framing are spaced 3 inches or less on center.

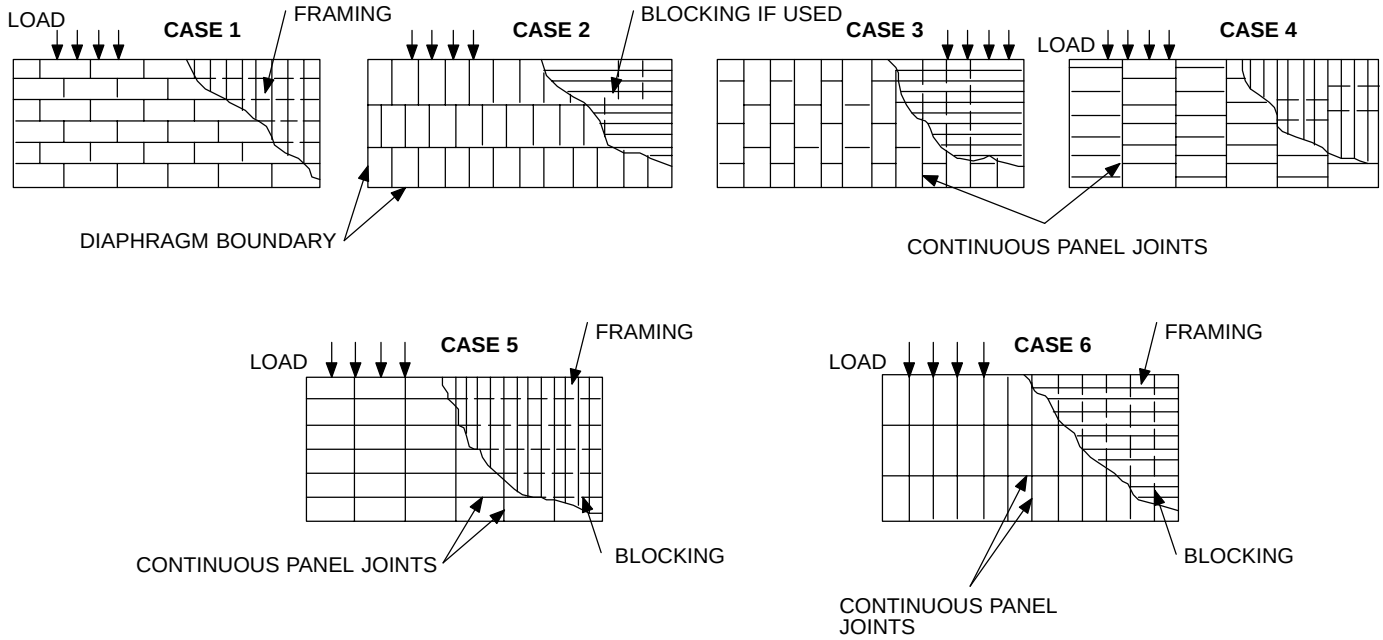

FIGURE 1

FIGURE 2

The application of hardwood floors installed over a radiant heated floor is approved by many hardwood manufacturers and trade organizations. Warmboard installed with hardwood floors is a proven successful technology. If you would like to research this topic, please check out the following:

Radiant Panel Association	www.radiantpanelassociation.org
The Hardwood Council	www.hardwoodcouncil.com
National Wood Flooring Assoc.	www.woodfloors.org
Launstein Floors	www.launstein.com
Lumber Liquidators	www.lumberliquidators.com
Carlisle Wide Plank Floors	www.wideplankflooring.com

First and Always...

Follow the specifications and recommendations of the wood floor manufacturer.
Also follow all installation specifications and guidelines documented by the National Wood Flooring Association.

- The hygroscopic nature of wood is actually why wood moves.
- The changing atmosphere of humidity will cause **hardwood** to **expand** and **contract**.
- These changes that finish hardwood floors can experience from humidity swings are referred to as **"gapping"** and **"cupping."**

Avoiding Gapping and Cupping of Hardwood Floors

Type of Lumber
Use a wood species that is dimensionally stable. There are three types of cuts from the tree: Quartersawn, Riftsawn, and Plainsawn. Quartersawn is nearly all vertical grain lumber which is a better quality cut and dimensionally stable. Riftsawn is the next best choice. Use narrow tongue and groove strips, 3 1/4" maximum. The narrower strips are more stable. Note that anything wider than 3 1/4" is referred to as plank flooring.

Acclimate Wood

Low moisture content of the wood strips is an important condition for stability. It is crucial to acclimate the wood. Bring the wood strips to the job site and sticker them. This means pull them out of their boxes and set them up so air can circulate around them. Acclimation time can vary, but two weeks is recommended. The wood flooring should not be delivered on the job site until the interior plastering is completed and dry.

The radiant floor heating should be in good operation also before the hardwood arrives. It is best to operate the radiant floor system for a few weeks to help bring down the moisture content of the Warmboard Subfloor. This procedure should take place no matter what time of year the hardwood is being installed.

Humidity control on the job site is crucial in some areas of the country. It may be required to operate the air conditioner to control the indoor humidity a few days before the wood is delivered. Keeping the indoor humidity between 30%-50% will keep the wood stable.

The hardwood should not experience any large swings in humidity or temperature once it arrives on the job site. It is best to keep the ambient temperature in the house between 60° and 80° and keep the indoor humidity between 30%-50% range. To meet these specifications, it will be required to operate the radiant floor heating or the air conditioner during wood acclimation and after hardwood installation.

Hardwood floor installers will often test the moisture content of the subfloor and the wood finish floor prior to an installation. The moisture content of Warmboard should be at 12% or less. The moisture content of the finish hardwood should read within 4% of the Warmboard reading. The ideal reading of the hardwood would be between 6%-9%, however, this reading can vary in your climate zone.

It is difficult to get a proper moisture content reading from the Warmboard subfloor due to the aluminum skin. For an accurate moisture reading from the top side of the Warmboard panel, use a moisture meter with insulated contract pins that have hammer probes. An example of this meter is model J4 or J2000 which is available at www.delmhorst.com.

Be aware of any moisture or humidity intrusion that may take place on a project. For example, a crawl space under Warmboard that is dry in the summer and experiences water intrusion in the winter months could cause large humidity swings and movement of the finished hardwood floor (gapping and cupping).

Installing the Hardwood

Hardwood should be nailed directly to the Warmboard. The required moisture barrier is built into the panel itself: the aluminum. Installing the hardwood perpendicular to the tubing is the easier method. It is important to see the tubing as strips are nailed to avoid tubing damage. It is recommended to tongue nail at a 45 degree angle at 6” on centers and use 2” flooring nails. Occasionally, the strip flooring will run the same direction as the tubing. When this occurs, either glue with Bostik’s Best (bostik.com) or face nail the strip.

Operating the Radiant Heating System

We recommend circulating low water temperatures for the first few days of operation under newly installed wood floors. Then, gradually bring the water temperature up to the designed set point. For example, start with 90° water and after a few days, bring it up to 100°. Then, finalize a set point of 110°.

It is ideal for the heating system to be designed with a control strategy referred to as Outdoor Reset. This technology sets up a heating curve that will gradually change the delivered water temperature based on the current heat loss of the house. This is an excellent strategy for gradually heating hardwood floors.

Important - Surface temperatures of the installed hardwood should not exceed 85°F.

Ductless Split Systems

Wall-Mounted Multi-zone

PURCHASER	P.O. #	DATE
PROJECT	LOCATION	
ENGINEER	ARCHITECT	
SUBMITTED BY	FOR APPROVAL	FOR REFERENCE

ITEM	PLAN DESIGNATION	QUANTITY	COOLING BTU/H	VOLTAGE	FRIEDRICH MODEL

Multiple wall-mounted indoor units connected to one outdoor unit.

Cool multiple rooms or use for backup systems in remote areas. Each indoor unit has its own remote control and is independently controlled for optimum zone cooling flexibility.

Features

- Auto-swing louvers (up/down)
- Auto-restart
- Auto-shut flaps
- Washable air filters
- Low-ambient operation
- Removable front grille

Wireless Remotes

- Individual remote for each indoor unit
- 24-hour timer and sleep timer
- Auto, cool, dry, fan and heat modes
- Four fan speeds plus auto-fan
- Four different transmitter codes

COOL/HEAT PUMP

		MODEL	ZONE 1	ZONE 2	TOTAL	SEER
BTU/h	C	M18DYF	9500	9500	19000	16.5
	H		11000	11000	22000	
	C	M21DYF	9500	12000	21500	16.5
	H		11000	14000	25000	
	C	M24DYF	12000	12000	24000	16.5
	H		14000	14000	28000	

COOL/HEAT PUMP

		MODEL	ZONE 1	ZONE 2	ZONE 3	ZONE 4	TOTAL	SEER
BTU/h	C	M27TYF	9200	9200	9200		27600	15.0
	H		11200	11200	11200		33600	
	C	M30TYF	9300	9300	11800		30400	15.0
	H		11000	11000	14000		36000	
	C	M33TYF	9400	11800	11800		33000	15.0
	H		10700	13600	13600		37900	
	C	M36TYF1	9100	9100	17000		35200	15.0
	H		9800	9800	18400		38000	
	C	M36TYF2	11700	11700	11700		35100	15.0
	H		12700	12700	12700		38100	
	C	M36QYF	8800	8800	8800	8800	35200	15.0
	H		9500	9500	9500	9500	38000	

TRI-ZONE HEAT PUMPS

PERFORMANCE RATINGS									
SYSTEM MODEL NO.		**M27TYF**	**M30TYF**		**M33TYF**		**M36TYF1**		**M36TYF2**
INDOOR MODEL		3 x MW09Y3FM	2 x MW09Y3FM	MW12Y3FM	MW09Y3FM	2 x MW12Y3FM	2 x MW09Y3FM	MW18Y3FM	3 x MW12Y3FM
OUTDOOR MODEL		MR36TQY3F	MR36TQY3F		MR36TQY3F		MR36TQY3F		MR36TQY3F
Capacity Cooling	BTU/h	9200 ea.	9300 ea.	11800	9400	11800 ea.	9100 ea.	17000	11700 ea.
Capacity Heating @ 47°F	BTU/h	11200 ea.	11000 ea.	14000	10700	13600 ea.	9800 ea.	18400	12700 ea.
Capacity Heating @ 17°F	BTU/h	8300 ea.	7700 ea.	9800	7200	9200 ea.	6700 ea.	12500	8600 ea.
HSPF		9.0	9.0		9.0		9.0		9.0
SEER		15.0	15.0		15.0		15.0		15.0
Moisture Removal	Pts/h	2.9 ea.	2.9 ea.	3.7	2.9	3.7 ea.	2.9 ea.	5.7	3.7 ea.
Airflow (Quiet, Low, Med, High)	CFM	185/220/260/295	185/220/260/295	215/250/305/355	185/220/260/295	215/250/305/355	185/220/260/295	240/290/355/415	215/250/305/355
Sound Rating - Indoor	dB-A	27/29/33/37	27/29/33/37	30/34/39/42	27/29/33/37	30/34/39/42	27/29/33/37	33/39/42/46	30/34/39/42
Sound Rating - Outdoor	dB-A	52	52		52		52		52
Operating Range COOL (HEAT)	°F	0 - 115 (14-75)	0 - 115 (14-75)		0 - 115 (14-75)		0 - 115 (14-75)		0 - 115 (14-75)
ELECTRICAL DATA (all indoor units receive power from outdoor unit; values listed are total)									
Power Source		230/208-60-1	230/208-60-1		230/208-60-1		230/208-60-1		230/208-60-1
Min. Ampacity	A	22.5	22.5		22.5		22.5		22.5
Cooling Watts	W	2710	3180		3710		4000		3980
Max. TD Fuse/Breaker	A	30	30		30		30		30
REFRIGERATION SYSTEM									
Refrigerant		R410A	R410A		R410A		R410A		R410A
Compressor Type		Inverter	Inverter		Inverter		Inverter		Inverter
Connections		Flare	Flare		Flare		Flare		Flare
Liquid Line O.D.	in	1/4	1/4		1/4		1/4	1/4	1/4
Suction Line O.D.	in	3/8	3/8		3/8		3/8	1/2	3/8
Factory Precharge	ft	165	165		165		165		165
Max. Line Length	ft	Each unit:82 Total:230	Each unit:82 Total:230		Each unit:82 Total:230		Each unit:82 Total:230		Each unit:82 Total:230
Max. Height Difference	ft	49	49		49		49		49
DIMENSIONS & WEIGHT									
INDOOR UNIT									
W x H x D	in	31 1/8 x 10 7/8 x 8 1/2 ea.	31 1/8 x 10 7/8 x 8 1/2 ea.		31 1/8 x 10 7/8 x 8 1/2		31 1/8 x 10 7/8 x 8 1/2	31 1/8 x 10 7/8 x 8 1/2	31 1/8 x 10 7/8 x 8 1/2
Net Weight	lbs	21 ea.	21 ea.	21	21	21 ea.	21 ea.	21	21 ea.
Shipping Weight	lbs	26 ea.	26 ea.	26	26	26 ea.	26 ea.	26	26 ea.
OUTDOOR UNIT									
W x H x D	in	35 3/8 x 32 5/8 x 13	35 3/8 x 32 5/8 x 13		35 3/8 x 32 5/8 x 13	35 3/8 x 32 5/8 x 13	35 3/8 x 32 5/8 x 13	35 3/8 x 32 5/8 x 13	35 3/8 x 32 5/8 x 13
Net Weight	lbs	159	159		159		159		159
Shipping Weight	lbs	172	172		172		172		172
REFRIGERATION LINE SETS									
15' Length		T32150	T32150		T32150		T32150	T42150	T32150
30' Length		T32350	T32350		T32350		T32350	T42350	T32350

DUAL-ZONE HEAT PUMPS

PERFORMANCE RATINGS					
SYSTEM MODEL NO.		**M18DYF**	**M21DYF**		**M24DYF**
INDOOR MODEL		2 x MW09Y3FM	MW09Y3FM	MW12Y3FM	2 x MW12Y3FM
OUTDOOR MODEL		MR24DY3F	MR24DY3F		MR24DY3F
Capacity Cooling	BTU/h	9500 ea.	9500 ea.	12000	12000 ea.
Capacity Heating @ 47°F	BTU/h	11000 ea.	11000 ea.	14000	14000 ea.
Capacity Heating @ 17°F	BTU/h	9500 ea.	9500 ea.	11000	10500 ea.
HSPF		9.0	9.0		9.0
SEER		16.5	16.5		16.5
Moisture Removal	Pts/h	2.9 ea.	2.9 ea	3.7 ea.	3.7 ea.
Airflow (Quiet, Low, Med, High)	CFM	185/220/260/295	185/220/260/295	215/250/305/355	215/250/305/355
Sound Rating - Indoor	dB-A	27/29/33/37	27/29/33/37	30/34/39/42	30/34/39/42
Sound Rating - Outdoor	dB-A	52	52		52
Operating Range COOL (HEAT)	°F	0 - 115 (14-75)	0 - 115 (14-75)		0 - 115 (14-75)
ELECTRICAL DATA (all indoor units receive power from outdoor unit; values listed are total)					
Power Source		230/208-60-1	230/208-60-1		230/208-60-1
Min. Ampacity	A	15	15		15
Cooling Watts	W	1600	1900		2300
Max. TD Fuse/Breaker	A	20	20		20
REFRIGERATION SYSTEM					
Refrigerant		R410A	R410A		R410A
Compressor Type		Inverter	Inverter		Inverter
Connections		Flare	Flare		Flare
Liquid Line O.D.	in	1/4	1/4	1/4	1/4
Suction Line O.D.	in	3/8	3/8	3/8	3/8
Factory Precharge	ft	98	98		98
Max. Line Length	ft	Each unit:82 Total:98	Each unit:82 Total:98		Each unit:82 Total:98
Max. Height Difference	ft	33	33		33
DIMENSIONS & WEIGHT					
INDOOR UNIT					
W x H x D	in	31 1/8 x 10 7/8 x 8 1/2 ea.	31 1/8 x 10 7/8 x 8 1/2 ea.		31 1/8 x 10 7/8 x 8 1/2 ea.
Net Weight	lbs	21 ea.	21	21	21 ea.
Shipping Weight	lbs	26 ea.	26	26	26 ea.
OUTDOOR UNIT					
W x H x D	in	35 3/8 x 32 5/8 x 13	35 3/8 x 32 5/8 x 13		35 3/8 x 32 5/8 x 13
Net Weight	lbs	151	151		151
Shipping Weight	lbs	164	164		164
REFRIGERATION LINE SETS					
15' Length		T32150	T32150		T32150
30' Length		T32350	T32350		T32350

QUAD-ZONE HEAT PUMP

M36QYF	
4 x MW09Y3FM	
MR36TQY3F	
8800 ea.	
9500 ea.	
6600 ea.	
9.0	
15.0	
2.9 ea.	
185/220/260/295	
27/29/33/37	
52	
0 - 115 (14-75)	
230/208-60-1	
22.5	
3900	
30	
R410A	
Inverter	
Flare	
1/4	
3/8	
165	
Each unit:82 Total:230	
49	
31 1/8 x 10 7/8 x 8 1/2 ea.	
21 ea.	
26 ea.	
35 3/8 x 32 5/8 x 13	
159	
172	
T32150	
T32350	

Note: One line set is required for each indoor unit.

SPLIT TYPE ROOM AIR CONDITIONER

INSTALLATION INSTRUCTION SHEET

⚠ CAUTION

R410A
REFRIGERANT

This Air Conditioner contains and operates with refrigerant R410A and Polyol Ester oil.

THIS PRODUCT MUST ONLY BE INSTALLED OR SERVICED BY QUALIFIED PERSONNEL.

Refer to Commonwealth, State, Territory and local legislation, regulations, codes, installation & operation manuals, before the installation, maintenance and/or service of this product.

(PART NO. 9374747030)

For authorized service personnel only.

This installation instruction sheet describes how to install the outdoor unit only. To install the indoor unit, refer to the installation instruction sheet included with the indoor unit.

IMPORTANT!
Please Read Before Starting

This air conditioning system meets strict safety and operating standards. As the installer or service person, it is an important part of your job to install or service the system so it operates safely and efficiently.

For safe installation and trouble-free operation, you must:

- Carefully read this instruction booklet before beginning.
- Follow each installation or repair step exactly as shown.
- Observe all local, state, and national electrical codes.
- Pay close attention to all danger, warning, and caution notices given in this manual.

WARNING: This symbol refers to a hazard or unsafe practice which can result in severe personal injury or death.

CAUTION: This symbol refers to a hazard or unsafe practice which can result in personal injury and the potential for product or property damage.

- Hazel alerting symbols

Electrical

Safety / alert

If Necessary, Get Help

These instructions are all you need for most installation sites and maintenance conditions. If you require help for a special problem, contact our sales/service outlet or your certified dealer for additional instructions.

In Case of Improper Installation

The manufacturer shall in no way be responsible for improper installation or maintenance service, including failure to follow the instructions in this document.

SPECIAL PRECAUTIONS

When Wiring

ELECTRICAL SHOCK CAN CAUSE SEVERE PERSONAL INJURY OR DEATH. ONLY A QUALIFIED, EXPERIENCED ELECTRICIAN SHOULD ATTEMPT TO WIRE THIS SYSTEM.

- Do not supply power to the unit until all wiring and tubing are completed or reconnected and checked.
- Highly dangerous electrical voltages are used in this system. Carefully refer to the wiring diagram and these instructions when wiring. Improper connections and inadequate grounding can cause accidental injury or death.
- Ground the unit following local electrical codes.
- Connect all wiring tightly. Loose wiring may cause overheating at connection points and a possible fire hazard.

When Transporting

Be careful when picking up and moving the indoor and outdoor units. Get a partner to help, and bend your knees when lifting to reduce strain on your back. Sharp edges or thin aluminum fins on the air conditioner can cut your fingers.

When Installing...

...In a Ceiling or Wall
Make sure the ceiling/wall is strong enough to hold the unit's weight. It may be necessary to construct a strong wood or metal frame to provide added support.

...In a Room
Properly insulate any tubing run inside a room to prevent "sweating" that can cause dripping and water damage to walls and floors.

...In Moist or Uneven Locations
Use a raised concrete pad or concrete blocks to provide a solid, level foundation for the outdoor unit. This prevents water damage and abnormal vibration.

...In an Area with High Winds
Securely anchor the outdoor unit down with bolts and a metal frame. Provide a suitable air baffle.

...In a Snowy Area (for Heat Pump-type Systems)
Install the outdoor unit on a raised platform that is higher than drifting snow. Provide snow vents.

When Connecting Refrigerant Tubing

- Keep all tubing runs as short as possible.
- Use the flare method for connecting tubing.
- Apply refrigerant lubricant to the matching surfaces of the flare and union tubes before connecting them, then tighten the nut with a torque wrench for a leak-free connection.
- Check carefully for leaks before starting the test run.

NOTE:
Depending on the system type, liquid and gas lines may be either narrow or wide. Therefore, to avoid confusion the refrigerant tubing for your particular model is specified as either "small" or "large" rather than as "liquid" or "gas".

When Servicing

- Turn the power OFF at the main circuit breaker panel before opening the unit to check or repair electrical parts and wiring.
- Keep your fingers and clothing away from any moving parts.
- Clean up the site after you finish, remembering to check that no metal scraps or bits of wiring have been left inside the unit being serviced.
- After installation, explain correct operation to the customer, using the operating manual.

⚠ DANGER
Never touch electrical components immediately after the power supply has been turned off. Electrical shock may occur. After turning off the power, always wait 5 minutes or more before touching electrical components.

⚠ WARNING	
①	**For the room air conditioner to operate satisfactorily, install it as outlined in this installation instruction sheet.**
②	**Connect the indoor unit and outdoor unit with the room air conditioner piping and cords available standards parts. This installation instruction sheet describes the correct connections using the installation set available from our standard parts.**
③	**Installation work must be performed in accordance with national wiring standards by authorized personnel only.**
④	**Also, do not use an extension cord.**
⑤	**Do not turn on the power until all installation work is complete.**
⑥	**Do not purge the air with refrigerants but use a vacuum pump to vacuum the installation.**
⑦	**There is not extra refrigerant in the outdoor unit for air purging.**
⑧	**Use a vacuum pump for R410A exclusively.**
⑨	**Using the same vacuum pump for different refrigerants may damage the vacuum pump or the unit.**
⑩	**Use a clean gauge manifold and charging hose for R410A exclusively.**
⑪	**If refrigerant leaks while work is being carried out, ventilate the area. If the refrigerant comes in contact with a flame, it produces a toxic gas.**

- **Be careful not to scratch the room air conditioner when handling it.**
- **After installation, explain correct operation to the customer, using the operating manual.**
- **Let the customer keep this installation instruction sheet because it is used when the room air conditioner is serviced or moved.**

STANDARD PARTS

The following installation parts are furnished. Use them as required.

Name and Shape	Q'ty	Use
Drain pipe 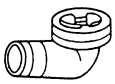	1	For outdoor unit drain piping work
Drain cap 	5	

36 type only

Name and Shape	Q'ty	Use
Adapter assy 12.7 mm → 9.52 mm (1/2 in.) (3/8 in.) 	1	For use when connecting models 9–12 to outdoor port A

OPERATING RANGE

	Temperature	Indoor air intake	Outdoor air intake
Cooling	Maximum	90 °F DB	115 °F DB
	Minimum	65 °F DB	32 °F DB
Heating	Maximum	86 °F DB or less	75 °F DB
	Minimum	—	14 °F DB

Indoor humidity about 80% or less

This air conditioner uses new refrigerant HFC (R410A).

The basic installation work procedures are the same as conventional refrigerant models.
However, pay careful attention to the following points:

① **Since the working pressure is 1.6 times higher than that of conventional refrigerant models, some of the piping and installation and service tools are special. (See the table below.)**
Especially, when replacing a conventional refrigerant model with a new refrigerant R410A model, always replace the conventional piping and flare nuts with the R410A piping and flare nuts.

② **Models that use refrigerant R410A have a different charging port thread diameter to prevent erroneous charging with conventional refrigerant and for safety. Therefore, check beforehand. [The charging port thread diameter for R410A is 1/2 UNF 20 threads per inch.]**

③ **Be more careful that foreign matter (oil, water, etc.) does not enter the piping than with refrigerant models. Also, when storing the piping, securely seal the openings by pinching, taping, etc.**

④ **When charging the refrigerant, take into account the slight change in the composition of the gas and liquid phases, and always charge from the liquid phase side whose composition is stable.**

Special tools for R410A

Tool name	Contents of change
Gauge manifold	Pressure is high and cannot be measured with a conventional gauge. To prevent erroneous mixing of other refrigerants, the diameter of each port has been changed. It is recommended the gauge with seals –0.1 to 5.3 MPa (–76 cmHg to 53 kgf/cm^2) for high pressure. –0.1 to 3.8 MPa (–76 cmHg to 38 kgf/cm^2) for low pressure.
Charge hose	To increase pressure resistance, the hose material and base size were changed.
Vacuum pump	A conventional vacuum pump can be used by installing a vacuum pump adapter.
Gas leakage detector	Special gas leakage detector for HFC refrigerant R410A.

Copper pipes

It is necessary to use seamless copper pipes and it is desirable that the amount of residual oil is less than 40 mg/10 m. Do not use copper pipes having a collapsed, deformed or discolored portion (especially on the interior surface). Otherwise, the expansion valve or capillary tube may become blocked with contaminants.
As an air conditioner using R410A incurs pressure higher than when using conventional refrigerant, it is necessary to choose adequate materials.
Thicknesses of copper pipes used with R410A are as shown in the table. Never use copper pipes thinner than that in the table even when it is available on the market.

Thicknesses of Annealed Copper Pipes (R410A)

Pipe outside diameter	Thickness
6.35 mm (1/4 in.)	0.80 mm (1/32 in.)
9.52 mm (3/8 in.)	0.80 mm (1/32 in.)
12.70 mm (1/2 in.)	0.80 mm (1/32 in.)
15.88 mm (5/8 in.)	1.00 mm (5/128 in.)
19.05 mm (3/4 in.)	1.20 mm (3/64 in.)

SELECTING THE MOUNTING POSITION

⚠ WARNING

Select installation locations that can properly support the weight of the indoor and outdoor units. Install the units securely so that they do not topple or fall.

⚠ CAUTION

① **Do not install where there is the danger of combustible gas leakage.**

② **Do not install the unit near heat source of heat, steam, or flammable gas.**

③ **If children under 10 years old may approach the unit, take preventive measures so that they cannot reach the unit.**

⚠ WARNING

① **Install the unit where it will not be tilted by more than 3˚. However, do not install the unit with it tilted towards the side containing the compressor.**

② **When installing the outdoor unit where it may exposed to strong wind, fasten it securely.**

Decide the mounting position with the customer as follows:

(1) Install the outdoor unit in a location which can withstand the weight of the unit and vibration, and which can install horizontally.
(2) Provide the indicated space to ensure good airflow.
(3) If possible, do not install the unit where it will be exposed to direct sunlight.
(If necessary, install a blind that does not interfere with the airflow.)
(4) Do not install the unit near a source of heat, steam, or flammable gas.
(5) During heating operation, drain water flows from the outdoor unit.
Therefore, install the outdoor unit in a place where the drain water flow will not be obstructed. (Reverse cycle model only)
(6) Do not install the unit where strong wind blows or where it is very dusty.
(7) Do not install the unit where people pass.
(8) Install the outdoor unit in a place where it will be free from being dirty or getting wet by rain as much as possible.
(9) Install the unit where connection to the indoor unit is easy.

- When there are obstacles at the back side.

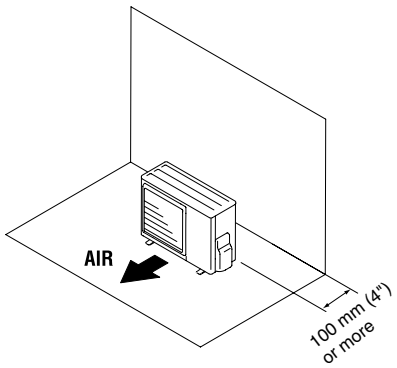

- When there are obstacles at the back and front sides.

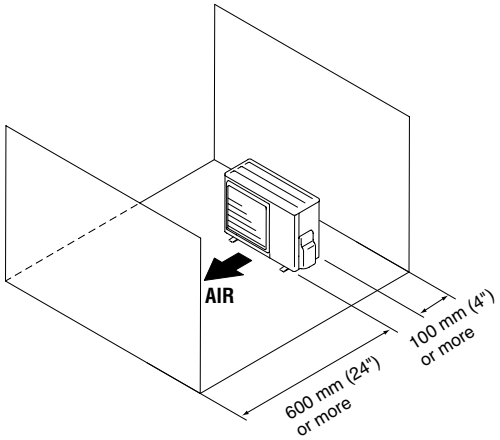

- When there are obstacles at the back, side(s), and top.

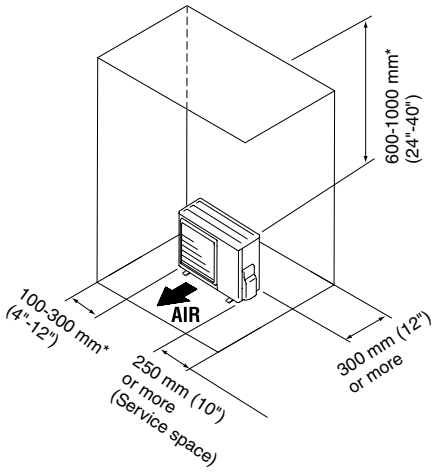

- When there are obstacles at the back side with the installation of more than one unit.

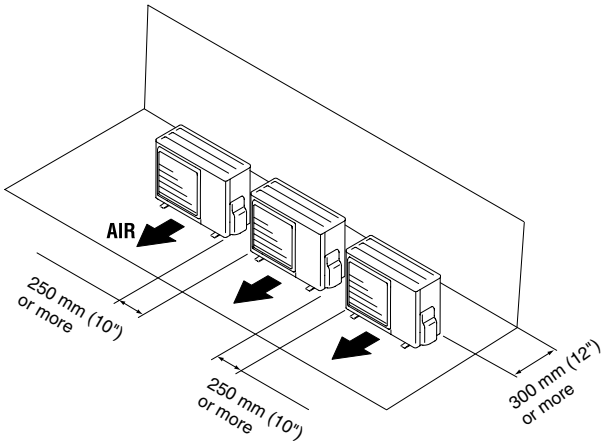

* If the space is larger than that is stated, the condition will be the same as that there are no obstacles.

SYSTEM LAYOUT

Layout example for the indoor units and outdoor unit

36 type

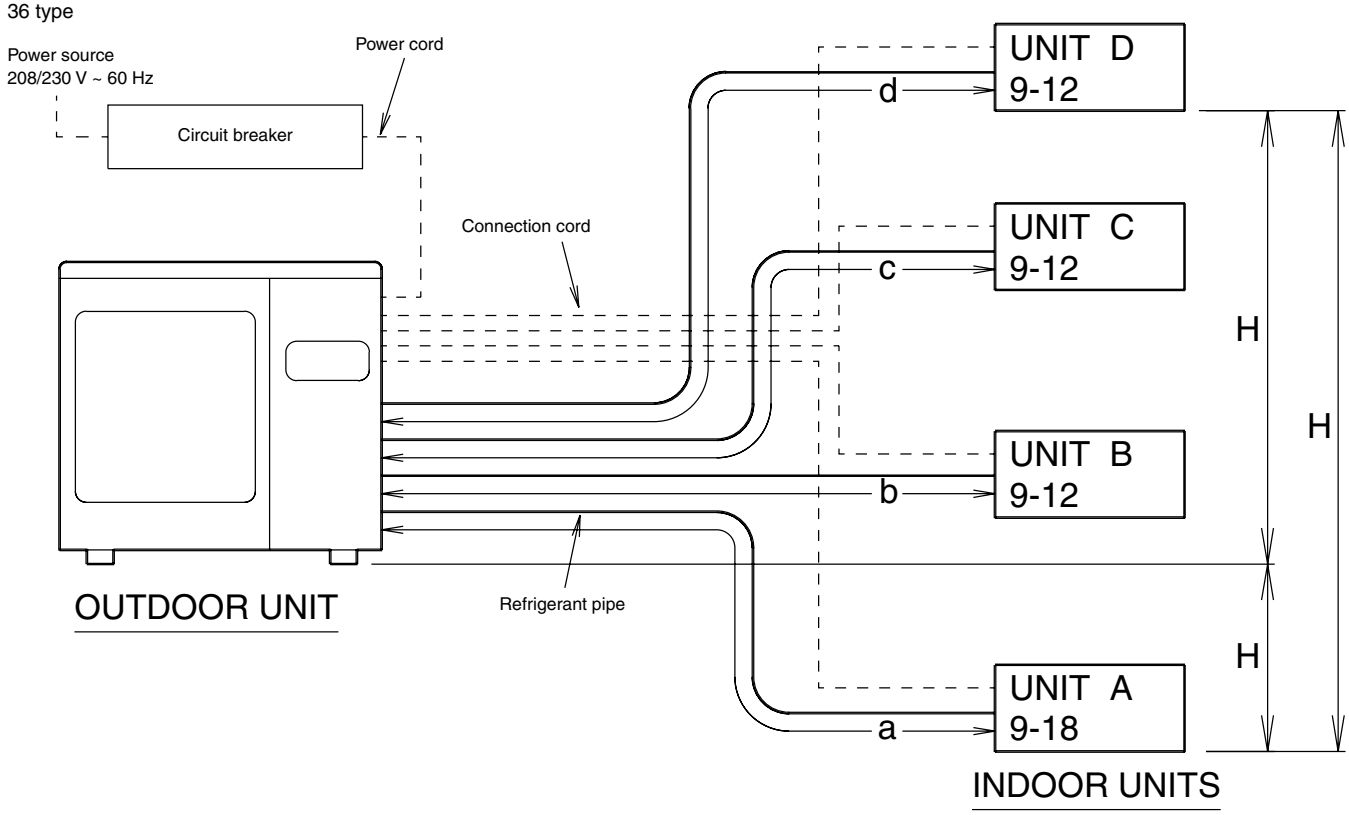

1. CONNECTABLE INDOOR UNIT CAPACITY TYPE

⚠ CAUTION

- **The total capacity of the indoor units connected must be between 27,000 and 36,000 BTU. (Refer to the Table.)**
  Ex. Maximum connection of four indoor units: 9,000+9,000+9,000+9,000=36,000
- **If the total capacity of the connected indoor units exceeds 36,000 BTU, an error will be displayed and the units will not operate. (For information on error displays, refer to the installation instruction sheets included with the indoor units.)**

- To install an indoor unit, refer to the installation instruction sheet included with the indoor unit.
- At least three indoor units must be connected to the outdoor unit.

Outdoor port		Connectable model name
Standard port size		
D	6.35/9.52	9 – 12
C	6.35/9.52	9 – 12
B	6.35/9.52	9 – 12
A	6.35/12.7	9 – 12*1/18

*1 When connecting models 9–12 to the outdoor unit, the included adapter is necessary. (For more information, refer to "2-4 HOW TO USE ADAPTER".)

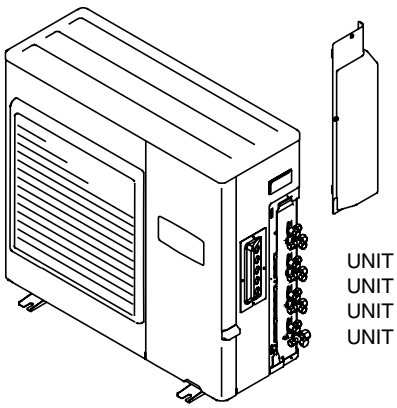

UNIT D ø6.35, ø9.52
UNIT C ø6.35, ø9.52
UNIT B ø6.35, ø9.52
UNIT A ø6.35, ø12.7

24 type

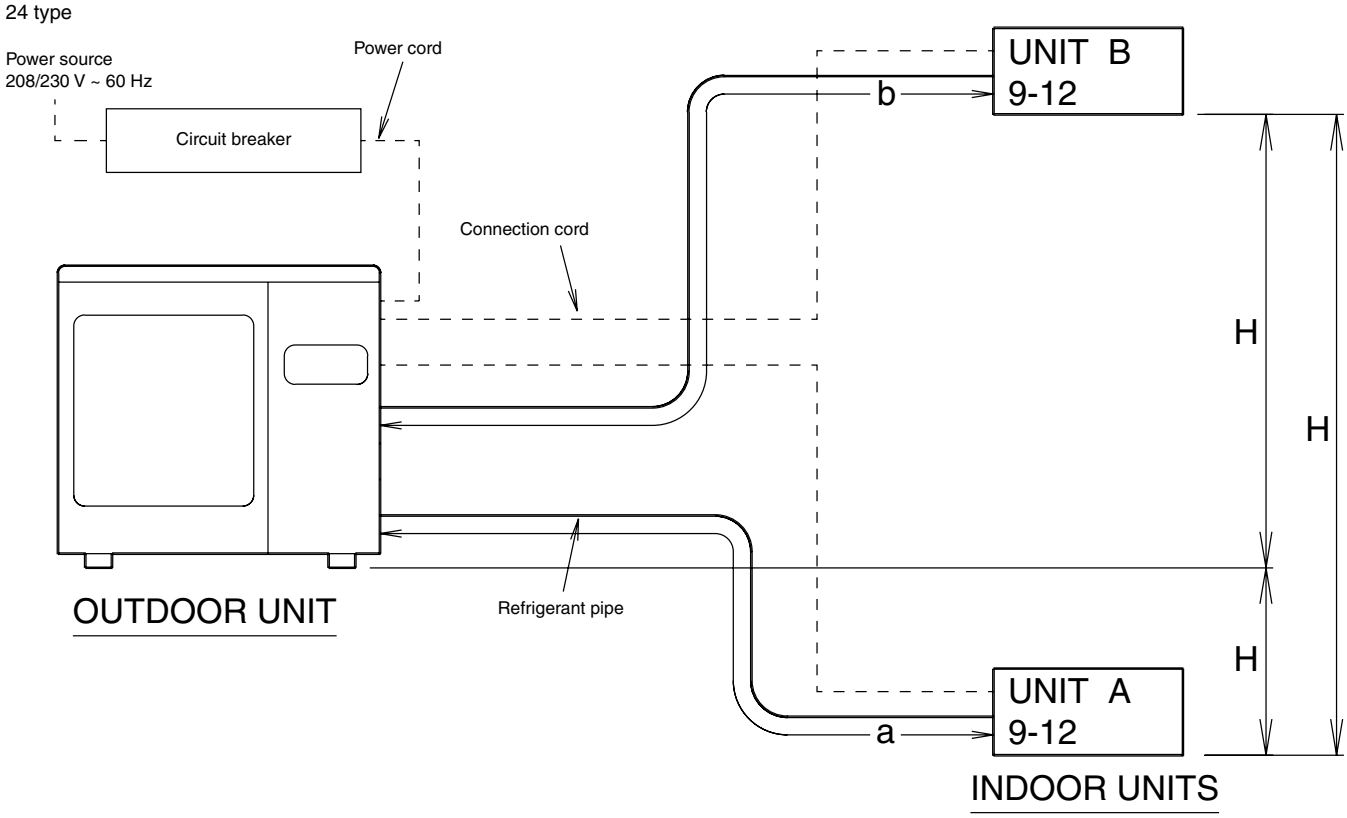

2. CONNECTABLE INDOOR UNIT CAPACITY TYPE

⚠ CAUTION

- **The total capacity of the indoor units connected must be between 18,000 and 24,000 BTU. (Refer to the Table.)**
  Ex. Maximum connection of four indoor units: 12,000+12,000=24,000
- **If the total capacity of the connected indoor units exceeds 24,000 BTU, an error will be displayed and the units will not operate. (For information on error displays, refer to the installation instruction sheets included with the indoor units.)**

- To install an indoor unit, refer to the installation instruction sheet included with the indoor unit.
- At least three indoor units must be connected to the outdoor unit.

Outdoor port		Connectable model name
Standard port size		
B	6.35/9.52	9 – 12
A	6.35/9.52	9 – 12

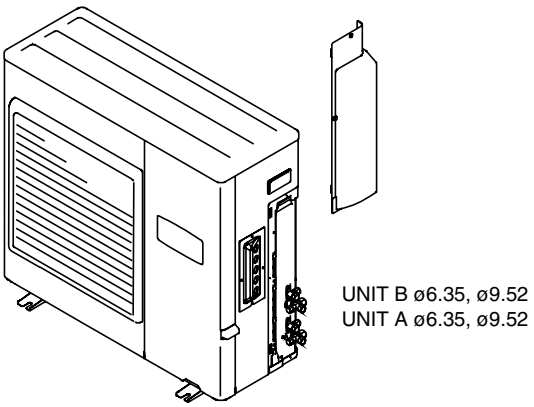

3. LIMITATION OF REFRIGERANT PIPING LENGTH

⚠ CAUTION

The total maximum pipe lengths and height difference of this product are shown in the table.
If the units are further apart than this, correct operation cannot be guaranteed.

36 type

Total max. length (a+b+c+d)	70 m (230 ft)*2
Max. length for each indoor unit (A, B, C, or D)	25 m (82 ft)
Max. height difference (H)	15 m (49 ft)
Min. length for each indoor unit (A, B, C, or D)	5 m (16 ft)

*2 If the total piping length is 51 m (167 ft) or longer, additional refrigerant charging is necessary. (For more information, refer to "2-6 ADDITIONAL CHARGE".)

24 type

Total max. length (a+b)	30 m (98 ft)
Max. length for each indoor unit (A or B)	25 m (82 ft)
Max. height difference (H)	10 m (33 ft)
Min. length for each indoor unit (A or B)	5 m (16 ft)

4. SELECTING PIPE SIZES

The diameters of the connection pipes differ according to the capacity of the indoor unit.
Refer to the following table for the proper diameters of the connection pipes between the indoor and outdoor units.

Capacity of indoor unit	Gas pipe size (thickness)	Liquid pipe size (thickness)
9 – 12	ø9.52 mm (0.8 mm) (3/8" (1/32"))	ø6.35 mm (0.8 mm) (1/4" (1/32"))
18	ø12.7 mm (0.8 mm) (1/2" (1/32"))	ø6.35 mm (0.8 mm) (1/4" (1/32"))

⚠ CAUTION

Operation cannot be guaranteed if the correct combination of pipes, valves, etc., is not used to connect the indoor and outdoor units.

5. HEAT INSULATION AROUND CONNECTION PIPES REQUIREMENTS

⚠ CAUTION

Install heat insulation around both the gas and liquid pipes. Failure to do so may cause water leaks.
Use heat insulation with heat resistance above 248 °F. (Reverse cycle model only)
In addition, if the humidity level at the installation location of the refrigerant piping is expected to exceed 70%, install heat insulation around the refrigerant piping. If the expected humidity level is 70-80%, use heat insulation that is 5.9 in. or thicker and if the expected humidity exceeds 80%, use heat insulation that is 7.9 in. or thicker.
If heat insulation is used that is not as thick as specified, condensation may form on the surface of the insulation.
In addition, use heat insulation with heat conductivity of 0.045 W/(m·K) or less (at 68 °F).

Connect the connection pipes according to "2 CONNECTING THE PIPING" in this installation instruction sheet.

6. ELECTRICAL REQUIREMENT

Always make the air conditioner power supply a special branch circuit and provide a special switch and receptacle. Do not extend the power cord.

⚠ CAUTION

	24 type	36 type
MINIMUM CIRCUIT AMPACITY	17 A	25 A
MAXIMUM OVERCURRENT PROTECTION (TIME DELAY FUSE OR HACR TYPE CIRCUIT BREAKER)	20 A	30 A

INSTALLATION PROCEDURE

1 OUTDOOR UNIT INSTALLATION

1. OUTDOOR UNIT PROCESSING

(1) Outdoor unit to be fasten with bolts at the four places indicated by the arrows without fail.

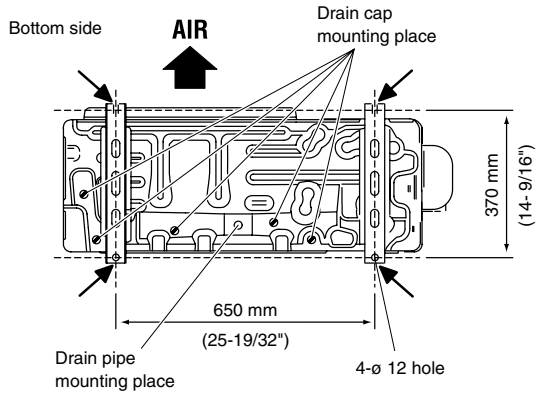

(2) Fix securely with bolts on a solid block. (Use 4 sets of commercially available M10 bolt, nut and washer.)

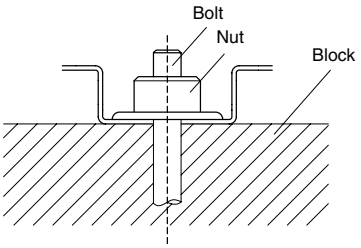

(3) Since the drain water flows out of the outdoor unit during heating operation, install the drain pipe and connect it to a commercial 16 mm hose. (Reverse cycle model only)

(4) When installing the drain pipe, plug all the holes other than the drain pipe mounting hole in the bottom of the outdoor unit with putty so there is no water leakage. (Reverse cycle model only)

⚠ CAUTION

When the outdoor temperature is 32 °F or less, do not use the accessory drain pipe and drain cap. If the drain pipe and drain cap are used, the drain water in the pipe may freeze in extremely cold weather. (Reverse cycle model only)

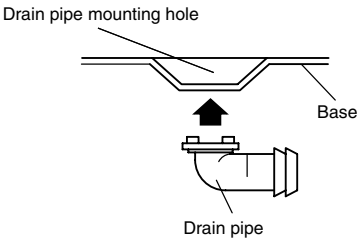

Outdoor unit connection cord and pipe connection preparations:

Remove outdoor unit valve cover.

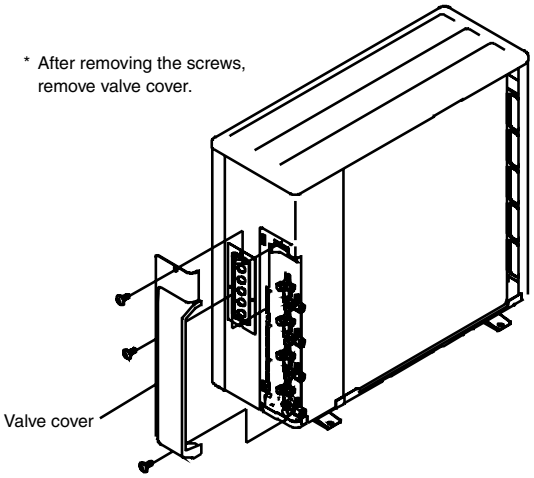

- Continued on back -

2 CONNECTING THE PIPE

⚠ CAUTION
① **Do not use mineral oil on flared part. Prevent mineral oil from getting into the system as this would reduce the lifetime of the units.**
② **While welding the pipes, be sure to blow dry nitrogen gas through them.**
③ **The maximum lengths of this product are shown in the table. If the units are further apart than this, correct operation can not be guaranteed.**

1. FLARING

(1) Cut the connection pipe to the necessary length with a pipe cutter.
(2) Hold the pipe downward so that cuttings will not enter the pipe and remove the burrs.
(3) Insert the flare nut (always use the flare nut attached to the indoor and outdoor units respectively) onto the pipe and perform the flare processing with a flare tool.
Use the special R410A flare tool, or the conventional flare tool.

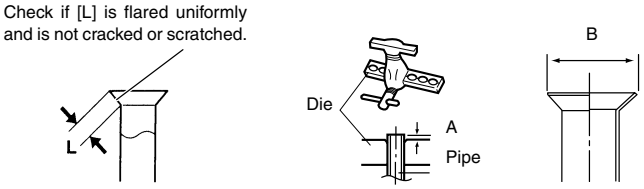

Pipe outside diameter	Dimension A (mm)
	Flare tool for R410A, clutch type
6.35 mm (1/4 in.)	0 to 0.5 (0 to 1/32 in.)
9.52 mm (3/8 in.)	
12.70 mm (1/2 in.)	
15.88 mm (5/8 in.)	
19.05 mm (3/4 in.)	

Pipe outside diameter	Dimension B $^{0}_{-0.4}$ (mm)
6.35 mm (1/4 in.)	9.1 (3/8 in.)
9.52 mm (3/8 in.)	13.2 (17/32 in.)
12.70 mm (1/2 in.)	16.6 (21/32 in.)
15.88 mm (5/8 in.)	19.7 (25/32 in.)
19.05 mm (3/4 in.)	24.0 (15/16 in.)

When using conventional flare tools to flare R410A pipes, the dimension A should be approximately 1/32 in. more than indicated in the table (for flaring with R410A flare tools) to achieve the specified flaring. Use a thickness gauge to measure the dimension A.

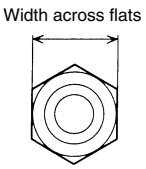

Pipe outside diameter	Width across flats of Flare nut
6.35 mm (1/4 in.)	17 mm (11/16 in.)
9.52 mm (3/8 in.)	22 mm (7/8 in.)
12.70 mm (1/2 in.)	26 mm (1-1/32 in.)
15.88 mm (5/8 in.)	29 mm (1-5/32 in.)
19.05 mm (3/4 in.)	36 mm (1-13/32 in.)

2. BENDING PIPES

The pipes are shaped by your hands. Be careful not to collapse them. Do not bend the pipes in an angle more than 90°.
When pipes are repeatedly bend or stretched, the material will harden, making it difficult to bend or stretch them any more. Do not bend or stretch the pipes more than three times.

⚠ CAUTION
① **To prevent breaking of the pipe, avoid sharp bends. Bend the pipe with a radius of curvature of 150 mm (6") or over.**
② **If the pipe is bent repeatedly at the same place, it will break.**

3. CONNECTION PIPES

Outdoor unit

(1) Detach the caps and plugs from the pipes.

⚠ CAUTION
① **Be sure to apply the pipe against the port on the indoor unit and outdoor unit correctly. If the centering is improper, the flare nut cannot be tightened smoothly. If the flare nut is forced to turn, the threads will be damaged.**
② **Do not remove the flare nut from the indoor unit pipe until immediately before connecting the connection pipe.**

(2) Centering the pipe against port on the indoor unit, turn the flare nut with your hand.

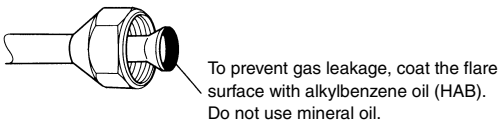

(3) Attach the connection pipe.

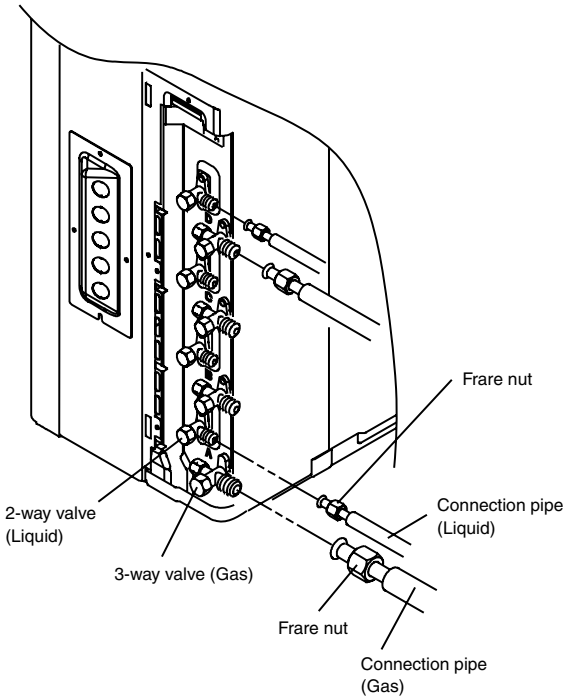

(4) When the flare nut is tightened properly by your hand, use a torque wrench to finally tighten it.

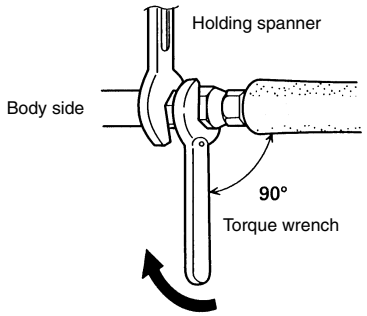

⚠ CAUTION

Hold the torque wrench at its grip, keeping it in the right angle with the pipe, in order to tighten the flare nut correctly.

Flare nut	Tightening torque
6.35 mm (1/4 in.) dia.	16 to 18 N·m (11.57 to 13.02 lbf·in.)
9.52 mm (3/8 in.) dia.	30 to 42 N·m (21.70 to 30.38 lbf·in.)
12.70 mm (1/2 in.) dia.	49 to 61 N·m (35.44 to 44.12 lbf·in.)
15.88 mm (5/8 in.) dia.	63 to 75 N·m (45.56 to 54.25 lbf·in.)
19.05 mm (3/4 in.) dia.	90 to 110 N·m (65.10 to 79.56 lbf·in.)

4. HOW TO USE ADAPTER (Connection ports of outdoor unit)

- When using the ADAPTER, be careful not to overtighten the nut, or the smaller pipe may be damaged.
- Apply a coat of refrigeration oil to the threaded connection port of the outdoor unit where the flare nut comes in.
- Use appropriate wrenches to avoid damaging the connection thread by overtightening the flare nut.
- Apply wrenches on both of flare nut (local part), and ADAPTER to tighten them.

Adapter tightening torque

Adapter type	Tightening torque
ø12.7 mm → ø9.52 mm (1/2 in.) (3/8 in.)	49 to 61 N·m (35.44 to 44.12 lbf·in.)

5. VACUUM

(1) Remove the cap, and connect the gauge manifold and the vacuum pump to the charging valve by the service hoses.
(2) Vacuum the indoor unit and the connecting pipes until the pressure gauge indicates –0.1 MPa (–76 cmHg).
(3) When –0.1 MPa (–76 cmHg) is reached, operate the vacuum pump for at least 30 minutes.
(4) Disconnect the service hoses and fit the cap to the charging valve to the specified torque.
(5) Remove the blank caps, and fully open the spindles of the 2-way and 3-way valves with a hexagon wrench [Torque: 6~7 N·m (4.4 to 5.2 lbf·in.)].
(6) Tighten the blank caps of the 2-way valve and 3-way valve to the specified torque.

		Tightening torque
Blank cap	6.35 mm (1/4 in.)	20 to 25 N·m (14.6 to 18.4 lbf·in.)
	9.52 mm (3/8 in.)	20 to 25 N·m (14.6 to 18.4 lbf·in.)
	12.70 mm (1/2 in.)	25 to 30 N·m (18.4 to 22.1 lbf·in.)
	15.88 mm (5/8 in.)	30 to 35 N·m (22.1 to 25.8 lbf·in.)
	19.05 mm (3/4 in.)	35 to 40 N·m (25.8 to 29.5 lbf·in.)
Charging port cap		10 to 12 N·m (7.4 to 8.9 lbf·in.)

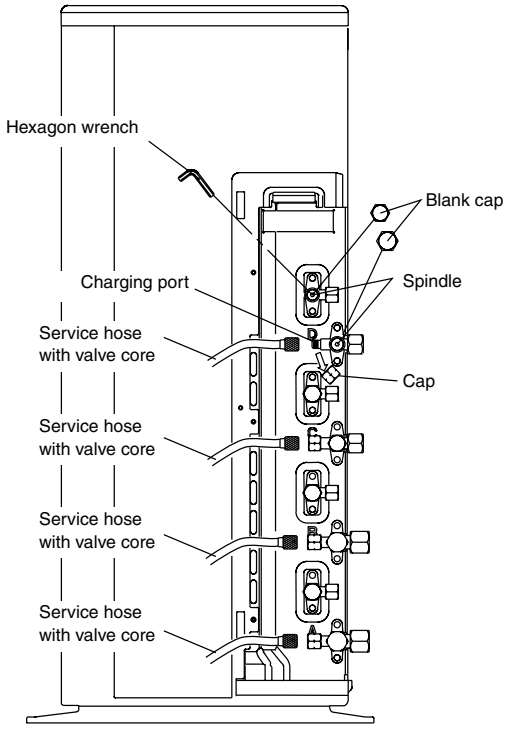

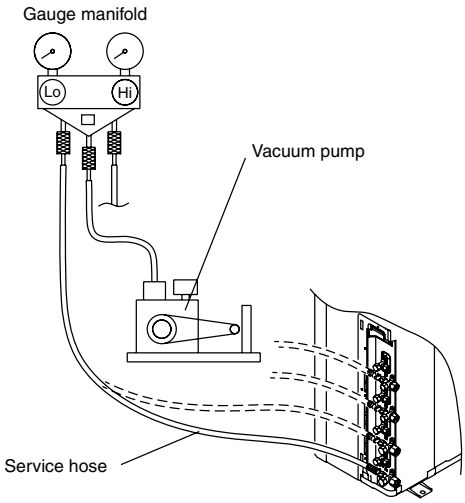

⚠ CAUTION

① **Do not purge the air with refrigerants, but use a vacuum pump to vacuum the installation! There is no extra refrigerant in the outdoor unit for air purging!**

② **Use a vacuum pump and gauge manifold and charging hose for R410A exclusively. Using the same vacuum for different refrigerants may damage the vacuum pump or the unit.**

6. ADDITIONAL CHARGE

Refrigerant suitable for a total piping length of 164 ft is charged in the outdoor unit at the factory.
When the piping is longer than 164 ft, additional charging is necessary.
For the additional amount, see the table below.

Total piping length	50 m (164 ft)	60 m (197 ft)	70 m (230 ft)	
Additional refrigerant	None	250 g (8.8 oz)	500 g (17.6 oz)	25 g/m (0.9 oz/ft)

⚠ CAUTION

① **When moving and installing the air conditioner, do not mix gas other than the specified refrigerant (R410A) inside the refrigerant cycle.**

② **When charging the refrigerant R410A, always use an electronic balance for refrigerant charging (to measure the refrigerant by weight).**

③ **When charging the refrigerant, take into account the slight change in the composition of the gas and liquid phases, and always charge from the liquid phase side whose composition is stable.**

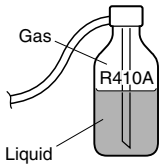

④ **Add refrigerant from the charging valve after the completion of the work.**

⑤ **If the units are further apart than the maximum pipe length, correct operation can not be guaranteed.**

7. GAS LEAKAGE INSPECTION

⚠ CAUTION

① **After connecting the piping, check the all joints for gas leakage with gas leak detector.**

② **When inspecting gas leakage, always use the vacuum pump for pressure. Do not use nitrogen gas.**

3 POWER

⚠ WARNING

① **The rated voltage of this product is 208/230 V A.C. 60 Hz.**

② **Before turning on verify that the voltage is within the 187 V to 253 V range.**

③ **Always use a special branch circuit and install a special receptacle to supply power to the air conditioner.**

④ **Use a special branch circuit breaker and receptacle matched to the capacity of the air conditioner. (Install in accordance with standard.)**

⑤ **Perform wiring work in accordance with standards so that the air conditioner can be operated safely and positively.**

⑥ **Install a leakage special branch circuit breaker in accordance with the related laws and regulations and electric company standards.**

⚠ CAUTION

① **The power source capacity must be the sum of the air conditioner current and the current of other electrical appliances. When the current contracted capacity is insufficient, change the contracted capacity.**

② **When the voltage is low and the air conditioner is difficult to start, contact the power company the voltage raised.**

4 ELECTRICAL WIRING

⚠ WARNING

① **Before starting work, check that power is not being supplied to the indoor unit and outdoor unit.**

② **Match the terminal board numbers and connection cord colors with those of the outdoor unit.**
Erroneous wiring may cause burning of the electric parts.

③ **Connect the connection cords firmly to the terminal board. Imperfect installation may cause a fire.**

④ **Always fasten the outside covering of the connection cord with the cord clamp. (If the insulator is chafed, electric leakage may occur.)**

⑤ **Always connect the ground wire.**

HOW TO CONNECT WIRING TO THE TERMINALS

A. For solid core wiring

(1) Cut the wire end with a wire cutter or wire-cutting pliers, then strip the insulation to about 63/64 in. to expose the solid wire.
(2) Using a screwdriver, remove the terminal screw(s) on the terminal board.
(3) Using pliers, bend the solid wire to form a loop suitable for the terminal screw.
(4) Shape the loop wire properly, place it on the terminal board and tighten securely with the terminal screw using a screwdriver.

B. For strand wiring

(1) Cut the wire end with a wire cutter or wire-cutting pliers, then strip the insulation to about 3/8 in. to expose the strand wiring.
(2) Using a screwdriver, remove the terminal screw(s) on the terminal board.
(3) Using a round terminal fastener or pliers, securely clamp a round terminal to each stripped wire end.
(4) Position the round terminal wire, and replace and tighten the terminal screw using a screwdriver.

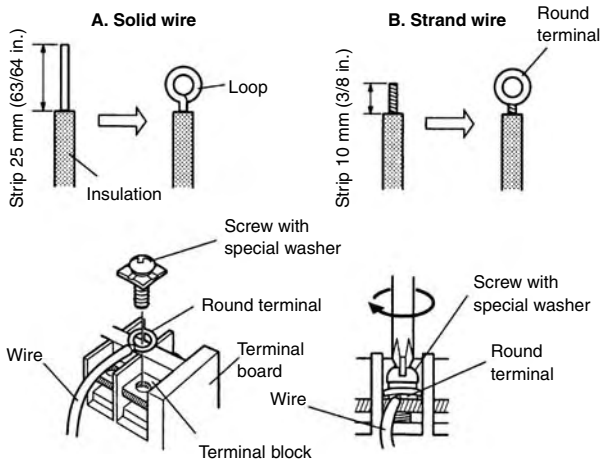

1. CONNECTION DIAGRAMS

36 type

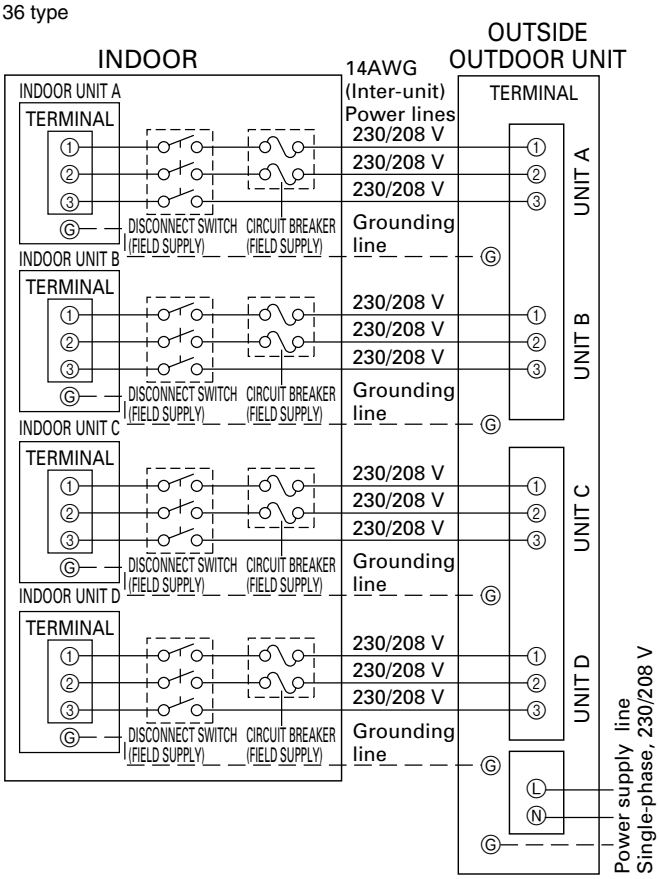

24 type

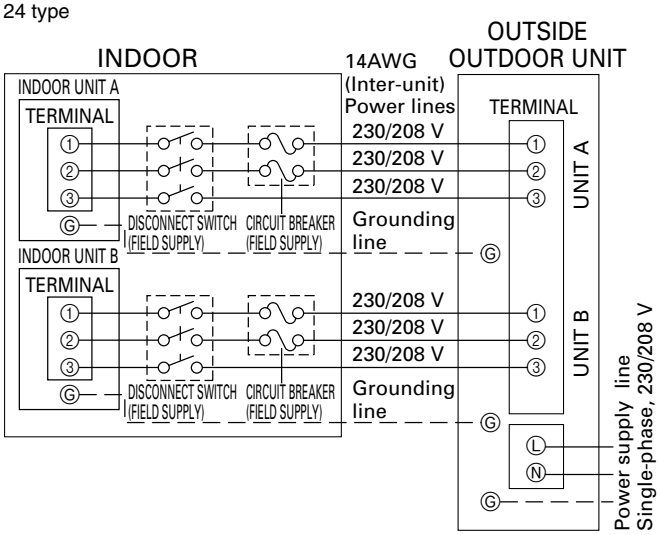

⚠ WARNING

Disconnect switch and circuit breaker for over current protection given in the table below is to be installed between the indoor unit and the outdoor unit.

Disconnect switch	Circuit breaker (or Fuse)
15A	240 V - 5A

⚠ CAUTION

① **Be sure to refer the above diagram and do correct field wiring.**
Wrong wiring causes malfunction of the unit.

② **Check local electrical codes and also any specific wiring instructions or limitation.**

2. OUTDOOR UNIT

(1) Service cover removal
- Remove the two mounting screws.
- Remove the service cover by pushing downwards.

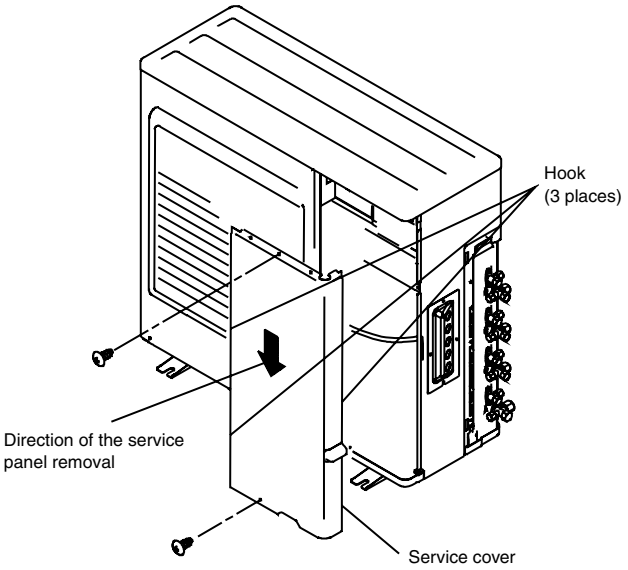

(2) Fasten the power supply cord and the connection cord to the conduit holder using the lock nut.
(Open the knock out holes with the tool so as not to transform conduit plate if necessary.)
(3) Connect the power supply cord and the connection cord to terminal.
(4) Fasten the power supply cord and connection cord with cord clamp.

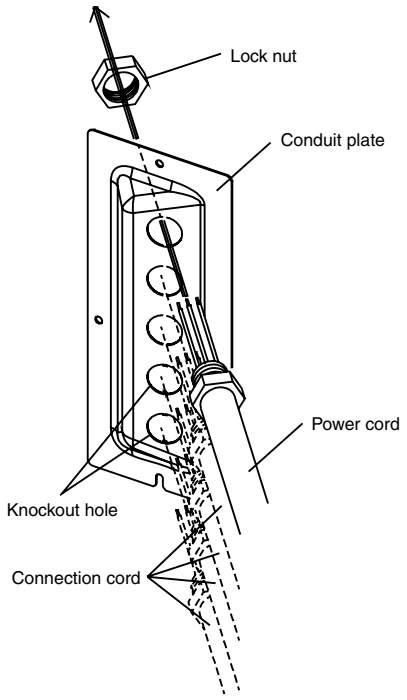

⚠ WARNING

Install the code perfectly. Imperfect installation may cause a risk of fire or electric shock due to dust or water.

36 type

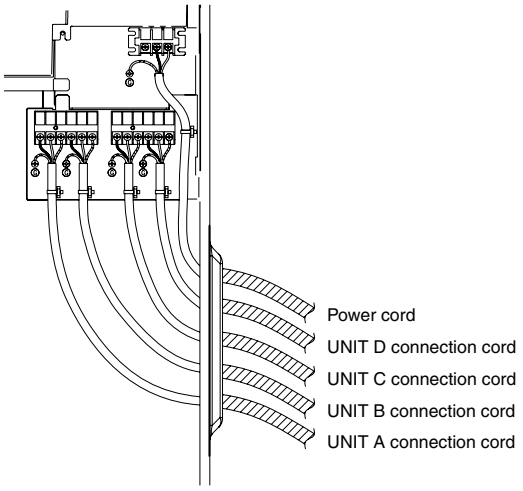

24 type

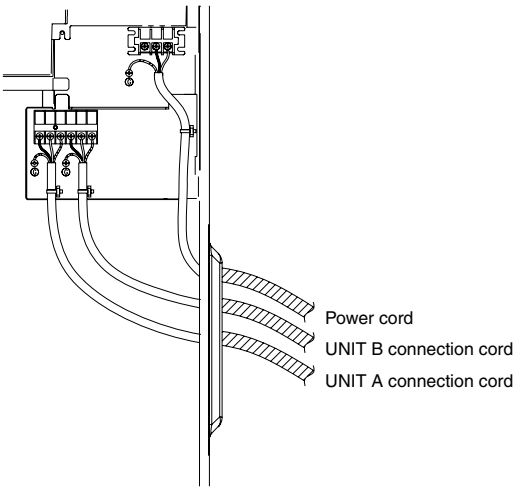

(5) Put the service cover and valve cover back after completion of the work.

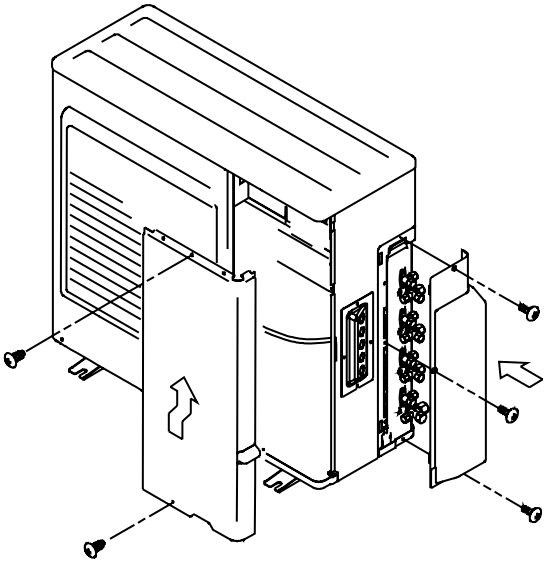

5 TEST RUNNING

⚠ CAUTION
Always turn on the power 12 hours prior to the start of the operation in order to ensure compressor protection

1. Make a TEST RUN in accordance with the installation instruction sheet for the indoor unit.

CHECK ITEMS

(1) INDOOR UNIT

(1) Is operation of each button on the remote control unit normal?
(2) Does each lamp light normally?
(3) Do the air flow-direction louver operate normally?
(4) Is the drain normal?
(5) Is there any abnormal noise and vibration during operation?

(2) OUTDOOR UNIT

(1) Is there any abnormal noise and vibration during operation?
(2) Will noise, wind, or drain water from the unit disturb the neighbors?
(3) Is there any gas leakage?

- Do not operate the air conditioner in the test running state for a long time.
- For the operation method, refer to the operating manual and perform operation check.

2. OUTDOOR UNIT LEDS

When a malfunction occurs in the outdoor unit, the LED on the circuit board lights to indicate the error. Refer to the following table for the description of each error according to the LED.

LED	Error contents
1 flash	Communication error (Indoor unit – Outdoor unit)
2 flash	Discharg pipe temperature sensor
3 flash	Outdoor heat exchanger temperature sensor
4 flash	Outdoor temperature sensor
5 flash	2 way valve sensor
6 flash	3 way valve sensor
7 flash	Compressor temperature sensor
8 flash	Heat sink temperature sensor
9 flash	Pressure switch A abnormal
10 flash	Pressure switch B abnormal
11 flash	Connection indoor unit error
12 flash	IPM error
13 flash	Compressor rotor position cannot detect
14 flash	Compressor cannot operate
15 flash	Outdoor fan abnormal
17 flash	Communication error (inverter - multi controller)
lighting	No error

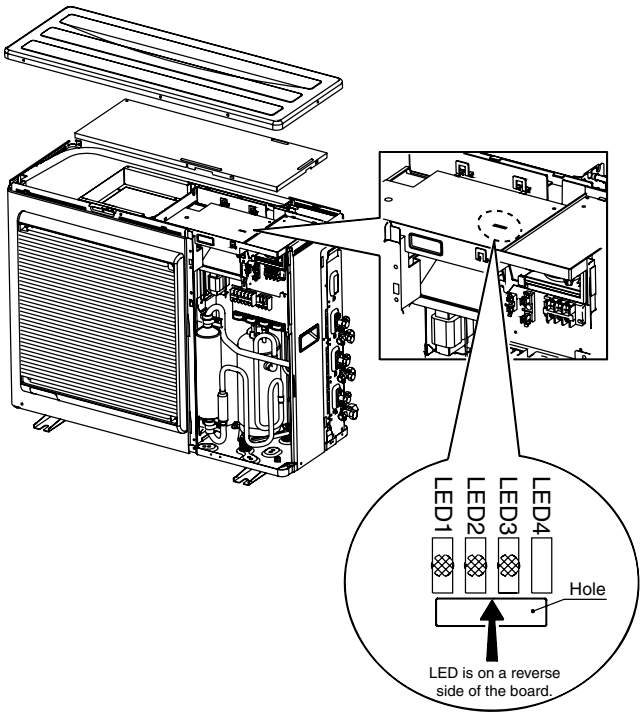

6 CUSTOMER GUIDANCE

Explain the following to the customer in accordance with the operating manual:

(1) Starting and stopping method, operation switching, temperature adjustment, timer, air flow adjustment, and other remote control unit operations.
(2) Air filter removal and cleaning.
(3) Give the operating manual and installation instruction sheet to the customer.

www.quietflex.com

Class 1 Flexible Air Duct

Product Specifications and Key Features

QuietFlex® manufactures flexible duct for the commercial, residential and manufactured home industries. We produce 3" through 22" duct in R4.2, R6, and R8 insulation thickness.

- Weather-resistant packaging
- Easy-to-carry package: Up to 10" bags are strapped to form a pair
- 12.5', 25'and 50' Lengths available
- Quick clean-up and easy disposal
- HUD/FHA standards 515.2.1, Paragraph B
- NFPA standards 90A and 90B
- Meets most federal, state, and local codes and standards
- Available in boxes and bags
- ETL Listed/Approved

"RIP STOP" Silver Jacket

The QuietFlex® Rip-Stop Silver Jacket Flex Duct has a metallic, polyester – vapor barrier with a special "rip-stop" scrim reinforcement.

SERIES		R-VALUE	DIAMETER													
BOX	BAG		3"	4"	5"	6"	7"	8"	9"	10"	12"	14"	16"	18"	20"	22"
30	40	4.2		●	●	●	●	●	●	●	●	●	●	●	●	●
70	80	6.0	●	●	●	●	●	●	●	●	●	●	●	●	●	●
84	85	8.0	●	●	●	●	●	●	●	●	●	●	●	●	●	●

UV-Inhibited Black Jacket

The QuietFlex® UV-Inhibited Black Jacket Flex Duct has a UV-inhibited polyethylene vapor barrier.

SERIES		R-VALUE	DIAMETER											
BOX	BAG		4"	5"	6"	7"	8"	9"	10"	12"	14"	16"	18"	20"
10	20	4.2	●	●	●	●	●	●	●	●	●	●	●	●
50	60	6.0	●	●	●	●	●	●	●	●	●	●	●	●
54	65	8.0	●	●	●	●	●	●	●	●	●	●	●	●

Mobile Home

The QuietFlex® Mobile Home Flex Duct has an extra heavy-duty, UV-inhibited, polyethylene-vapor barrier and complies with HUD standards for outdoor use with mobile homes.

SERIES	R-VALUE	DIAMETER						
		6”	8”	10”	12”	14”	16”	18”
51	4.2	●	●	●	●	●	●	●
71	6.0			●	●	●	●	●
81	8.0			●	●	●	●	●

Uninsulated Air Connector

SERIES	DIAMETER									
	3”	4”	5”	6”	7”	8”	9”	10”	12”	14”
06	●	●	●	●	●	●	●	●	●	●

Installation Notes:

- Not to be installed in lengths greater than 14 feet.
- Not to be used to vent appliances for cooling, heating, and clothes drying unless approved and recommended by appliance manufacturer.

PERFORMANCE DATA - APPLIES TO ALL PRODUCTS	
Rated Positive Pressure	**10” W.C. per UL 181**
Rated Negative Pressure	**½ W.C. per UL 181**
Velocity	**6,000 FPM**
Temperature Range	**-20°F to 200°F - Intermittent / -20°F to 180°F - Continuous**
Flame Spread / Smoke Developed	**Less than 25 / Less than 50**

Limited Warranty | Limitation of Liability | Disclaimer of Unstated Warranties

The flexible air duct is warranted by QuietFlex® Manufacturing Company, L.P., for five (5) years against defects in material and workmanship. This warranty is for exchange of duct only and does not include installation.

Warranty Exclusions
Warranty is excluded if flexible air duct is used in the following installations / applications:
1. Where duct is exposed to direct or indirect light
2. Where duct is used on the high – pressure side of variable air – volume (VAV) systems.

Limitation of Liability
QuietFlex's® liability for damages, whether in contract, in tort, under warranty, in negligence or otherwise, shall not exceed the return of the amount of the purchase price paid for the QuietFlex® products. QuietFlex® shall not be liable for special, indirect or consequential damages. Specification and performance data listed herein are subject to change without notice.

Disclaimer of Unstated Warranties
This warranty is the only warranty of QuietFlex® products. All other warranties, expressed or implied, including, but not limited to, warranties of merchantibility and fitness for a particular purpose are expressly disclaimed.
QuietFlex® is a registered trademark of QuietFlex® Manufacturing Company, L.P.

Proud Member Of HARDI
HEATING, AIRCONDITIONING & REFRIGERATION DISTRIBUTORS INTERNATIONAL

QuietFlex Manufacturing Company, L.P.
4518 Brittmoore Road
Houston, Texas 77041
Phone 713.849.2163
Fax 713.849.0753
Toll Free 877.694.3669

www.quietflex.com

Aprilaire®
Fresh Ideas for Indoor Air

EMAIL APRILAIRE or CALL 1-800-334-6011

FIND AN APRILAIRE DEALER
Enter Zip or Postal Code
GO

NEED REPLACEMENT PARTS?

SEARCH FOR KEYWORDS
GO

Our Products > Aprilaire Model 8870 Thermostat

More Information on This Model:

Owner's Manual
Product Registration
VIEW CONSUMER FEEDBACK

Are you building your dream home or have you already built it? Do you want or have a system that enables you to control all your audio, video, security and lighting systems from one central location? Of course you do—but what about your heating, ventilation and air conditioning system (HVAC)? If you truly want the utmost in comfort and convenience for your family and home, your automation system has to include HVAC.

Take controlling your heating and air conditioning system to a whole new level. Aprilaire's Communicating Thermostats can be integrated into a home automation system or controlled right from your home's PC. Never again will you have to walk around to each thermostat to control the temperature in different areas of your house. The 8870 also simplifies the process when you have 4, 6, 10, 20 or more thermostats. Simply control your HVAC through an automation system or your personal computer whether at home, at work or from any other location.

Whether you're building a new home with total smart-home automation in mind or are making your current home smarter—the Aprilaire 8870 Communicating Thermostats promise you total convenience and control 24-7.

You want a simple but technologically advanced system that can give you total control over all your home's systems. Aprilaire's Communicating Thermostats can be integrated into a whole-home automation system or controlled right from your home's computer giving you the control you want and need.

Whole-Home Automation

Sophisticated whole-home automation systems are making the home of the future a reality. Today's homes are being built with even the most basic automated systems such as home security or lighting systems. Aprilaire's Communicating Thermostats are capable of seamlessly integrating into those systems, so instead of using a thermostat to just control your climate needs, you can use one automation system to control your HVAC, lighting, security, audio/video and other home automation needs.

Aprilaire offers the flexibility to work with many manufacturers' automation systems—click here for a sample list.

PC Control

What if I don't have a home automation system? Aprilaire offers a package that allows you to take control of your thermostats through your personal computer. Program, monitor, set limits, view history and see the current outdoor temperature while sitting at your home computer, and better yet, with Internet access you can do all this from outside your home—anywhere in the world. This package is an excellent monitor and control option for second or vacation homes and condos.

Features & Benefits

Using state-of-the-art design and the latest in technology, automated systems use multiple thermostats installed throughout your home. Some features and benefits include:

SEE INDOOR AIR QUALITY IN ACTION!

SELECTED PRODUCT

< Thermostats
- Programmable Thermostats
  - Model 8570
  - Models 8363/8365/8366
- Non-Programmable Thermostats
  - Models 8344/8346/8348
- Communicating Thermostats
  - Model 8870
- Problems
  - High Energy Bills
- Consumer Feedback
- FAQs
- Intelligence

OTHER PRODUCTS

> Humidifiers
> Dehumidifiers
> Air Cleaners
> Zoned Comfort Control
> Ventilation

MORE PRODUCT INFO

> Literature
> Portable vs. Whole Home
> Product Registration

- **Simple Operation—**While Aprilaire Model 8870 Communicating Thermostats can be individually operated, they work best in a system, whether controlled by a PC or home automation system. Internet access allows you to control the system from virtually anywhere in the world.
- **Exceptional Convenience—**The individual programming or resetting of thermostats is completely eliminated. You receive information from all Aprilaire 8870 Thermostats on your home automation system's touch panel.
- **Energy Savings—**Temperature settings can be customized within the system to fit your lifestyle, delivering increased energy savings.
- **Total Comfort and Ease of Mind—**Left for work and forgot to set back your thermostat? Turn them off from your work PC. Going to your vacation home this summer? Program your air conditioner to turn on a couple hours before you arrive. Relaxing at night with a great movie—adjust the temperature, dim the lights, and turn on your A/V system all from one location, your home automation's touch panel.

Want to get automated today? Contact your local Systems Integrator or Aprilaire for more information today.

SPECIFICATION SECTION

DIVISION 16 - ELECTRICAL

AllKindsCable.co
A Division of Security Design S

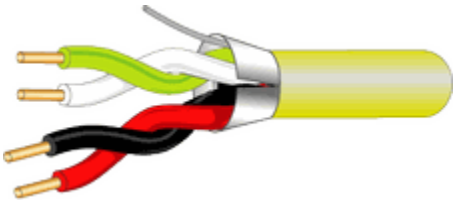

West Penn HA3245
2 Pair 16 Gauge
Shielded Broadcast Cable

Spool size 1000 ft.

Description:

- 2 pair 16 AWG overall shielded
- ASTM Bare copper conductor 16 AWG (26x30)
- PVC insulation thickness . 010" (.25mm)
- Twisted pair construction
- Overall shielded with aluminum foil 100% coverage and TC 18 AWG stranded drain wire
- Overall PVC jacket Nom. jacket thickness .020" (.51mm)
- Nominal O.D. .240" (6.10 mm)
- Standard spool size 1000 feet Applications: Indoor (non-conduit per NEC) for:
- Home Entertainment Systems
- Sound and Audio
- Background Music
- Power-Limited Control Circuits Rating:
- UL listed NEC type CL2
- Constructed in accordance with UL Standard 13
- Complies with UL 1581 Vertical Tray Flame Test
- Temperature range: -20°C to 60°C dry locations Electrical Characteristics:
- Nominal capacitance: 80 pf/ft* 144 pf/ft**
- Nom. D.C.R. @ 20℃ : 4.4 Ω/1000 ft. *Capacitance between conductors. **Capacitance l

conductor and the other conductors connected to the shield. Color Code Conductors: Black Green Overall Jacket Color: Blue

CAUTION: Dry locations only. The electronic characteristics of this cable may change due t tension, crushing, and application of pulling compounds during installation.

Spec Sheet in PDF format

WPHA3245 **$384.00** Add to Cart

Toll Free (877) 719-2288

Phone (518) 943-4451 FAX (518) 943-4888

Power Delivery

Floor Boxes For Wood Floors

homeSELECT™ Wood Floor Boxes allow for the placement of electrical power or a combination of power and voice/data devices. Boxes easily mount into the floor and are height adjustable (up to ¾") for optimal alignment and fit. UL Listed E31999 and CSA Certified.

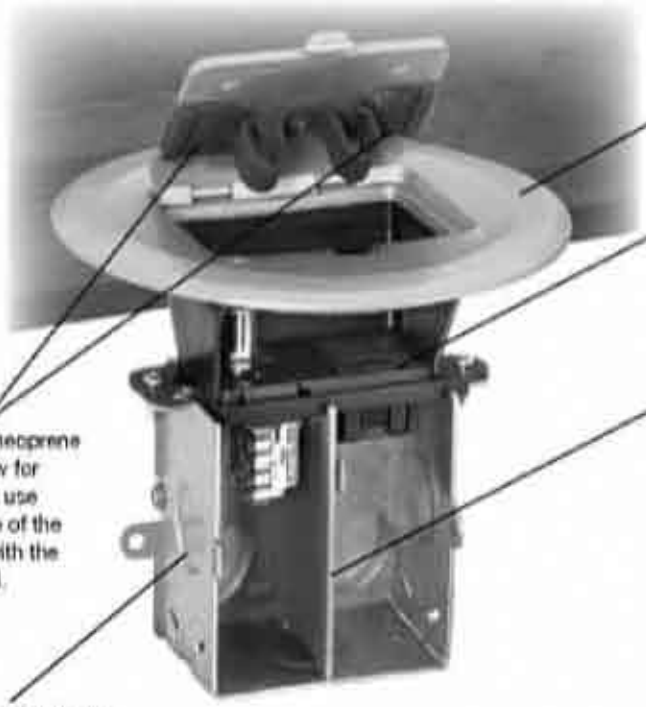

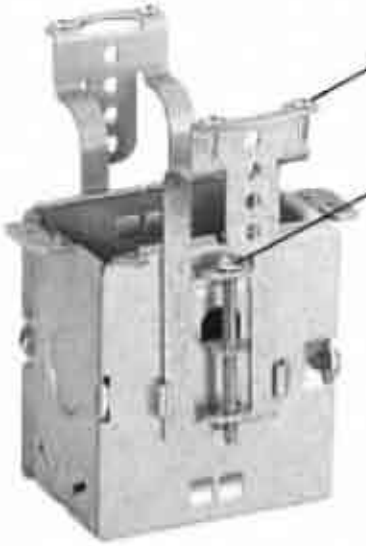

Floor Boxes For Wood Floors

Duplex floor receptacles provide ample connections to service lighting, entertainment equipment and computers for family rooms and offices. Single receptacle configurations available for minimum requirements.

- Metal covers feature electrostatic powder coating that resists wear and provides a distinctive finish.
- Recessed GFCI/Decorator opening.
- Cut out template provided to assure proper sub-flooring preparation.

Description	Rating	Material	Catalog No.
Decorator Duplex Receptacle Floor Box Kit includes steel box, flange and hinged door cover assembly with duplex receptacle. Designed for installation in wood floors, mounts to sub-floor between joists.	15A 125V NEMA 5-15R	Brass Finish Stainless Finish	RF515 RF515SS
Flange and Hinged Door Cover Assembly includes duplex receptacle, neoprene gaskets, for use with steel box RF500.	15A 125V NEMA 5-15R	Brass Finish Stainless Finish	RF506 RF506SS
Adjustable Floor Box 2½" Deep Three ½" knockouts: One on bottom, one on each side, non-metallic sheathed cable clamps on each side.		Steel	RF500
Hinged Door Cover Only Replacement door for RF515 and RF506 series.		Brass Finish Stainless Finish	RF507 RF507SS
JLOAD™ Multimedia Outlet Specifically designed to provide power, Cat. 5e and coax in a single gang box. Requires adjustable box RF500. Perfect for HDTV and computer use where a combination of power and data are needed. Includes decorator frame, voltage divider, one Cat. 5e, one F-connector and one power receptacle 15A 125V, NEMA 5-15R.		Black	RJ650BK
Single Receptacle Floor Box Rated includes steel box, single receptacle and cover.	15A 125V NEMA 5-15R	Brass	RF151
Single Receptacle Display Rated Receptacle and cover only, excludes box.	15A 125V NEMA 5-15R	Brass	RF151D

netSELECT™ Voice/Data and Audio/Video

Audio/Video Connectors

netSELECT™ Audio Video Connectors allow custom creation of multimedia outlets and workstations while maintaining a decorative look.

- Quick and secure snap in design.
- Use with multimedia plates and decorator frames. See pages H5 & H6.
- cULus Listed 1863 - Communication Circuit Accessory.

Customize your jack selections and look.

Description	Color	Standard Catalog No.	Recessed Catalog No.
Gold F-Type Coupler Bulkhead, Female to Female	Almond	SFFGAL	SFGRFAL
	Black	SFFGBK	SFGRFBK
	Gray	SFFGGY	SFGRFGY
	Ivory	SFFGEI	SFGRFEI
	Light Almond	SFFGLA	SFGRFLA
	White	SFFGW	SFGRFW
Nickel F-Type Coupler Bulkhead, Female to Female	Almond	SFFALX	–
	Black	SFFBX	–
	Gray	SFFGX	–
	Ivory	SFFEX	–
	Light Almond	SFFLAX	–
	White	SFFWX	–
RCA Gold Pass Through, Female to Female, Red Interior	Almond	SFRCRFFAL	SFRCRRAL
	Black	SFRCRFFBK	SFRCRRBK
	Gray	SFRCRFFGY	SFRCRRGY
	Ivory	SFRCRFFEI	SFRCRREI
	Light Almond	SFRCRFFLA	SFRCRRLA
	White	SFRCRFFW	SFRCRRW
RCA Gold Pass Through, Female to Female, White Interior	Almond	SFRCWFFAL	SFRCWRAL
	Black	SFRCWFFBK	SFRCWRBK
	Gray	SFRCWFFGY	SFRCWRGY
	Ivory	SFRCWFFEI	SFRCWREI
	Light Almond	SFRCWFFLA	SFRCWRLA
	White	SFRCWFFW	SFRCWRW
RCA Gold Pass Through, Female to Female, Yellow Interior	Almond	SFRCYFFAL	SFRCYRAL
	Black	SFRCYFFBK	SFRCYRBK
	Gray	SFRCYFFGY	SFRCYRGY
	Ivory	SFRCYFFEI	SFRCYREI
	Light Almond	SFRCYFFLA	SFRCYRLA
	White	SFRCYFFW	SFRCYRW

netSELECT™ Voice/Data and Audio/Video

Audio/Video Connectors

netSELECT™ Audio Video Connectors allow custom creation of multimedia outlets and workstations while maintaining a decorative look.

- Quick and secure snap in design.
- Use with multimedia plates and decorator frames. See pages H5 & H6.
- cULus Listed 1863 - Communication Circuit Accessory.

Description	Color	Catalog No.
BNC Connector	Almond	SFBAL
	Black	SFBBK
	Gray	SFBGY
	Ivory	SFBEI
	White	SFBW

Snap In RCA 110 Punch Down,		
Red Interior	Black	SFRC110R
White Interior	Black	SFRC110W
Yellow Interior	Black	SFRC110Y

Gold Speaker Post Connectors, with Black Stripe	Almond	SFSPGBKAL
	Ivory	SFSPGBKEI
	Light Almond	SFSPGBKLA
	White	SFSPGBKW
Gold Speaker Post Connectors, with Red Stripe	Almond	SFSPGRAL
	Ivory	SFSPGREI
	Light Almond	SFSPGRLA
	White	SFSPGRW

Gold Speaker Black Banana Plug (Order 1 to receive a bag of 10 plugs)	Black	SPPBK10
Gold Speaker Red Banana Plug (Order 1 to receive a bag of 10 plugs)	Red	SPPR10

Note: Not cUL.

S-Video, Female to Female Connectors	Black	SFSVBK
S-Video, 110 Terminals	Black	SFSV110BK

Blank Insert (Order 1 to receive a bag of 10 blanks)	Almond	SFSBAL10
	Black	SFSBBK10
	Gray	SFSBGY10
	Ivory	SFSBEI10
	Light Almond	SFSBLA10
	White	SFSBW10

Decorator Products

Modular Snap Fit Jacks

netSELECT™ Voice/Data Jacks and AV Connectors allow custom creation of multimedia outlets and workstations while maintaining a decorative look.

- Quick and secure snap in design.
- Use with multimedia plates and decorator frames (see pages H5 & H6).
- UL Listed and CSA Certified, or cULus Listed 1863 - Communication Circuit Accessory.

Molded-in icon designation for: Cat. 6, Cat. 5e or telephone jacks

6 5e

Description	Color	Cat. 6	Cat. 5e	USOC
Modular Snap Fit Jacks	Almond	NSJ6AL	NSJ5EAL	NSJUAL
	Black	NSJ6BK	NSJ5EBK	NSJUBK
	Blue	NSJ6B	NSJ5EB	NSJUB
	Gray	NSJ6GY	NSJ5EGY	NSJUGY
	Ivory	NSJ6I	NSJ5EI	NSJUI
	Light Almond	NSJ6LA	NSJ5ELA	NSJULA
	Orange	NSJ6OR	NSJ5EOR	NSJUOR
	White	NSJ6W	NSJ5EW	NSJUW

Description	Color	Standard	Recessed
Gold F-Type Coupler Bulkhead, Female to Female	Almond	SFFGAL	SFGRFAL
	Black	SFFGBK	SFGRFBK
	Gray	SFFGGY	SFGRFGY
	Ivory	SFFGEI	SFGRFEI
	Light Almond	SFFGLA	SFGRFLA
	White	SFFGW	SFGRFW
Nickel F-Type Coupler Bulkhead, Female to Female	Almond	SFFALX	–
	Black	SFFBX	–
	Gray	SFFGX	–
	Ivory	SFFEX	–
	Light Almond	SFFLAX	–
	White	SFFWX	–
RCA Gold Pass Through, Female to Female, Red Interior	Almond	SFRCRFFAL	SFRCRRAL
	Black	SFRCRFFBK	SFRCRRBK
	Gray	SFRCRFFGY	SFRCRRGY
	Ivory	SFRCRFFEI	SFRCRREI
	Light Almond	SFRCRFFLA	SFRCRRLA
	White	SFRCRFFW	SFRCRRW
RCA Gold Pass Through, Female to Female, White Interior	Almond	SFRCWFFAL	SFRCWRAL
	Black	SFRCWFFBK	SFRCWRBK
	Gray	SFRCWFFGY	SFRCWRGY
	Ivory	SFRCWFFEI	SFRCWREI
	Light Almond	SFRCWFFLA	SFRCWRLA
	White	SFRCWFFW	SFRCWRW
RCA Gold Pass Through, Female to Female, Yellow Interior	Almond	SFRCYFFAL	SFRCYRAL
	Black	SFRCYFFBK	SFRCYRBK
	Gray	SFRCYFFGY	SFRCYRGY
	Ivory	SFRCYFFEI	SFRCYREI
	Light Almond	SFRCYFFLA	SFRCYRLA
	White	SFRCYFFW	SFRCYRW

See pages H2 - H4 for complete voice/data and AV connectors.

Switches and Receptacles

Duplex Quick-Thread Receptacle

Quick And Easy Does It.

homeSELECT™ exclusive "Quick Thread" makes installation of wallplates and receptacles quicker and easier.

ONE PUSH FOR A SNUG FIT
Just push in the screw and turn.

Elongated strap with continuous plaster ears to secure device.

New face design provides smooth appearance to complement interiors and the convenience of finder grooves.

Multiple-drive Slot/Phillips/Robertson head screws.

Push wire "sure hold" termination for extra holding power.

Tough thermoplastic ultrasonically welded cover and base.

HOW "QUICK THREAD" WORKS

A stainless steel spring grabs the threads and locks the screw in place. "Quick Thread" works with any wallplate screw.

Just push the screw in with a screwdriver.

Description	Rating	Color	Catalog No.
Duplex Receptacle,	15A 125V	Almond	**RR15QAL**
Quick Thread,	NEMA 5-15R	Brown	**RR15Q**
2 Pole, 3 Wire,		Ivory	**RR15QI**
Self-Grounding,		Light Almond	**RR15QLA**
Push and Side Wire Terminations		White	**RR15QW**

Switches and Receptacles

Duplex and Single Receptacles

Provides branch circuit convenience power in duplex and single configurations.

- Smooth indented face appearance.
- Terminal screws accepts up to #12 AWG.
- Push wire designed for #14 AWG solid copper wire only.
- Duplex ultrasonically welded.
- UL Listed E2186, CSA Certified.

Description	Rating	Color	Catalog No.
Duplex Receptacle, 2 Pole, 3 Wire, Grounding, Push and Side Wire Terminations	15A 125V NEMA 5-15R	Almond	**RR15AL**
		Brown	**RR15**
		Ivory	**RR15I**
		Light Almond	**RR15LA**
		White	**RR15W**
Duplex Receptacle, 2 Pole, 3 Wire, Self-Grounding, Push and Side Wire Terminations	15A 125V NEMA 5-15R	Almond	**RR15SAL**
		Brown	**RR15S**
		Ivory	**RR15SI**
		Light Almond	**RR15SLA**
		White	**RR15SW**
Duplex Receptacle, Without Ears, 2 Pole, 3 Wire, Grounding, Push and Side Wire Terminations (Bulk pack 100)	15A 125V NEMA 5-15R	Almond	**RR15KAL**
		Ivory	**RR15KI**
		White	**RR15KW**
Single Receptacle, 2 Pole, 3 Wire, Self-Grounding, Side Wire Terminations	15A 125V NEMA 5-15R	Almond	**RR151AL**
		Brown	**RR151**
		Ivory	**RR151I**
		Light Almond	**RR151LA**
		White	**RR151W**
Single Receptacle, 2 Pole, 3 Wire, Self-Grounding, Side Wire Terminations	20A 125V NEMA 5-20R	Almond	**RR201AL**
		Brown	**RR201**
		Ivory	**RR201I**
		Light Almond	**RR201LA**
		White	**RR201W**

Self Test GFCI Receptacles

Safety, Plus More.

The only GFCI receptacle that tests itself. Every 60 seconds the device performs a diagnostic test on its circuitry, offering a comprehensive approach to testing. Reverse wire safety feature assures unit cannot be reset under a reversed wiring condition. Meets UL943 performance requirements.

Rating

4 to 6 mA
.025 sec. nominal
60 Hz.
120V AC +10% - 15%
15A/20A, 20A Feed Thru
2000A
-35°C to +66°C or
-30°F to +150°F
95%
Meets UL498 for receptacles,
UL943 for GFCIs
UL File E41978, CSA Certified
Meets all NEC® & CEC requirements

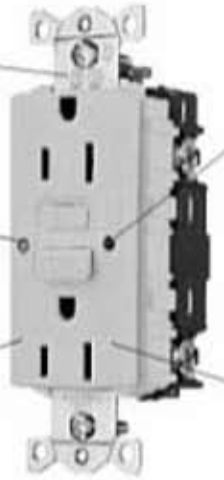

Description	Rating	Color	Catalog No.
Self Test GFCI Duplex Receptacle, Rush, Nylon Face, Back and Side Wire Terminations, Matching Nylon Wallplate Included	15A 125V NEMA 5-15R	Almond	**GFST15AL**
		Black	**GFST15BK**
		Brown	**GFST15**
		Gray	**GFST15GY**
		Ivory	**GFST15I**
		Light Almond	**GFST15LA**
		Red	**GFST15R**
		White	**GFST15W**
Self Test GFCI Duplex Receptacle, Rush, Nylon Face, Back and Side Wire Terminations, Matching Nylon Wallplate Included	20A 125V NEMA 5-20R	Almond	**GFST20AL**
		Black	**GFST20BK**
		Brown	**GFST20**
		Gray	**GFST20GY**
		Ivory	**GFST20I**
		Light Almond	**GFST20LA**
		Red	**GFST20R**
		White	**GFST20W**
Self Test Circuit Guard Faceless GFCI, Faceless, Back and Side Wire Terminations, Matching Nylon Wallplate Included	20A 125V	Almond	**GFSTBF20AL**
		Black	**GFSTBF20BK**
		Brown	**GFSTBF20**
		Gray	**GFSTBF20GY**
		Ivory	**GFSTBF20I**
		Light Almond	**GFSTBF20LA**
		Red	**GFSTBF20R**
		White	**GFSTBF20W**

Switches and Receptacles

Range and Dryer Power Receptacles and Plugs

Rock And Lock - As Easy As 1-2-3.

Speed up installations with rock and lock self alignment.

1 Line up the cover & base.

2 Rock into place.

3 Lock in with screw.

Description	Color	Flush Mount Power Recept.	Panel Mount With Ground	Flush Mount With Cover	Surface Mount Power Recept.	Angled Plugs
NEMA 14-30 30A 125/250V	Black White	**RR430F** **RR430FW**	**RR430PM** –	– **RR430WIP**	**RR430** –	**RR435P** –
NEMA 14-50 50A 125/250V	Black White	**RR450F** **RR450FW**	**RR450PM** –	– **RR450WIP**	**RR450** –	**RR435P** –
NEMA 10-30 30A 125/250V	Black	**RR330F***	–	–	**RR330***	**RR335P**
NEMA 10-50 50A 125/250V	Black	**RR350F***	–	–	**RR350***	**RR335P**

* For replacement use only.

Switches and Receptacles

Range and Dryer Power Receptacles and Plugs

Range and dryer devices offer heavy-duty connections in either surface mount or flush mount configurations. Made of rugged thermoplastic. Available in 30 Amp and 50 Amp, 75° C Rated.

- Terminals accept up to #4 AWG conductors.
- Power outlets are suitable for copper or aluminum conductors.
- Flush mount outlets fit 1 and 2-gang boxes.
- UL Listed E1706, CSA Certified.

Description	Rating	Color	Catalog No.
Flush Mount Power Receptacle, 3 Pole, 4 Wire, with Ground, Mounts on One or Two-Gang Box	30A 125/250V	Black	**RR430F**
	30A 125/250V	White	**RR430FW**
	50A 125/250V	Black	**RR450F**
	50A 125/250V	White	**RR450FW**
Flush Mount Power Receptacle, 3 Pole, 3 Wire, without Ground, Mounts on One or Two-Gang Box	30A 125/250V	Black	**RR330F***
	50A 125/250V	Black	**RR350F***

Panel Mount, 3 Pole, 4 Wire, with Ground	30A 125/250V	Black	**RR430PM**
	50A 125/250V	Black	**RR450PM**

Flush Mount Power Receptacle, 3 Pole, 4 Wire, with Ground, Integrated Wallplate Cover, Mounts on 4 11/16" Square Box	30A 125/250V	White	**RR430WIP**
	50A 125/250V	White	**RR450WIP**

Surface Mount Power Receptacle, 3 Pole, 4 Wire, with Ground	30A 125/250V	Black	**RR430**
	50A 125/250V	Black	**RR450**
Surface Mount Power Receptacle, 3 Pole, 3 Wire, without Ground	30A 125/250V	Black	**RR330***
	50A 125/250V	Black	**RR350***

Angled Plugs, 3 Pole, 4 Wire, with Ground	30/50A 125/250V	Black	**RR435P**
3 Pole, 3 Wire, without Ground	30/50A 125/250V	Black	**RR335P**
Plugs supplied with interchangeable blades for 30 or 50 Amp configuration.			

Description	Color	Standard	Mid-Size
Surface Mount Wallplate, 1-Gang, 1-Single Hole 2.15" Dia.	Ivory	**NP724I**	**NPJ724I**
	White	**NP724W**	**NPJ724W**
	Chrome	**SCH723**	–
	Stainless Steel	**SS723**	–

Surface Mount Wallplate, 2-Gang, 1-Single Hole 2.15" Dia.	Ivory	**NP703I**	**NPJ703I**
	White	**NP703W**	**NPJ703W**
	Stainless Steel	**SS703**	–

* For replacement use only.

OutBack Power Systems, Inc.

MODULAR RUGGEDIZED SINEWAVE INVERTER/CHARGERS

Now Its Your Choice!

Although OutBack has become known for offering the first and only sealed true sinewave inverter/charger, we still found some real reasons to consider offering a vented version of the popular FX series as well…

Introducing the VFX series sinewave inverter/chargers

original FX SERIES

FX2024E	2.0 kWAC	24 VDC	$1995 USD
FX2348E	2.3 kWAC	48 VDC	$2245 USD

Sealed Construction Features:

- Powder coated all aluminum die-cast chassis
- Internal electronic components are cooled by heat transfer
- Gaskets on all openings to provide water-resistance
- Sealed design protects internal electronics from salt, dirt or contaminated air, bugs, critters, mold etc.
- Conformal coated circuit boards to resist corrosion
- Designed to allow easy field servicing and repair

Ideal Applications:

- Hot and humid climates where a protected area is not available for installation of the inverter/charger system
- Coastal environments where you can't get away from the salt air
- Dirty environments where dust or drifting organic matter could clog the air intake openings in an unattended system
- Boats and RV's where water might splash on the inverter
- Greater control of unwanted radio frequency interference

new VFX SERIES

VFX3024E	3.0 kWAC	24 VDC	$2345 USD
VFX3048E	3.0 kWAC	48 VDC	$2345 USD

Vented Construction Features:

- Powder coated all aluminum die-cast chassis
- Internal electronic components are cooled by outside air
- Stainless steel screen to protect air intake and internal fan
- UL 94V0 plastic vent grills to protect the air exhaust. All openings are 0.0025 inches square to keep out dirt, bugs, and other critters – we call it "bug proof" construction
- Air inlet comes with removable, washable foam filter insert to trap small particles
- Conformal coated circuit boards to resist corrosion
- Higher output power when inverting or battery charging when compared with the sealed FX inverter versions
- Designed to allow easy field servicing and repair

Ideal Applications:

- Areas where salt air is not a problem and the climate is dry
- When more watts per dollar is required
- Installations where well protected environments are available
- Very hot locations such as in poorly ventilated equipment rooms

OutBack Power Systems, Inc.
ARLINGTON WA USA

MODULAR RUGGEDIZED TRUE SINEWAVE INVERTER/CHARGERS

SPECIFICATIONS

	FX2012E	FX 2024E	FX 2348E	VFX2612E	VFX 3024E	VFX 3048E
Continuous Power Rating at 25 degrees C	2000VA	2300VA	2300VA	2600VA	3000VA	3000VA
Nominal DC Input Voltage	12	24	48	12	24	48
Nominal AC Input Voltage / Frequency	230V / 50Hz	230V / 50Hz	230V / 50Hz	230V / 50Hz	230V / 50Hz	230V / 50Hz
Continuous AC RMS Output current at 25 C	8.7 amps	8.7 amps	10 amps	11.3 amps	13 amps	13 amps
Idle Power (typical at no AC load) (sleep – 3 watts)	18-20 Watts	18-20 Watts	21-23 Watts	18-20 Watts	18-20 Watts	21-23 Watts
Efficiency (typical at 25 degree C and 75% resistive load)	>90%	92%	93%	89%	90%	90%
Total Harmonic distortion voltage (typical / max)	2% / 5%	2% / 5%	2% / 5%	2% / 5%	2% / 5%	2% / 5%
Output Voltage Regulation	+/- 2% typ	+/- 2% typ	+/- 2% typ	+/- 2% typ	+/- 2% typ	+/- 2% typ
Surge Power Capability Peak (1mSec)	28 amps AC	35 amps AC	28 amps AC	35 amps AC	35 amps AC	35 amps AC
Surge Power Capability RMS (100mSec)	20 amps AC	25 amps AC	25 amps AC	20 amps AC	25 amps AC	25 amps AC
Overload Capability (from 25 C start) 5second	4000 VA	4800 VA	4800 VA	4000 VA	4800 VA	4800 VA
Overload Capability (from 25 C start) 30 minutes	2500 VA	3100 VA	3100 VA	3100 VA	3300 VA	3300 VA
Automatic AC transfer Relay (at nominal AC)	30 amps AC	30 amps AC	30 amps AC	30 amps AC	30 amps AC	30 amps AC
AC Input Current (adjustable limits)	30 amps max	30 amps max	30 amps max	30 amps max	30 amps max	30 amps max
AC Input Voltage Range (adjustable limits)	200-260 VAC	200-260 VAC	200-260 VAC	200-260 VAC	200-260 VAC	200-260 VAC
Frequency Range – AC Input	40 to 60 Hz	40 to 60 Hz	40 to 60 Hz	40 to 60 Hz	40 to 60 Hz	40 to 60 Hz
DC Input Range (adjustable low battery cut-out)	10 – 16.5 VDC	20 - 33 VDC	40 - 66 VDC	10 – 16.5 VDC	20 - 33 VDC	40 - 66 VDC
Recommended DC Breaker	OBDC-250	OBDC-175	OBDC-100	OBDC-250	OBDC-250	OBDC-175
Continuous Battery Charger Output amps DC	100 amps	55 amps	35 amps	125 amps	85 amps	45 amps
Shipping Weight	60 Lbs	60 Lbs	60 Lbs	62 Lbs	62 Lbs	62 Lbs

Revision D

OutBack Power Systems

PSR

POWER SYSTEM RACK

OutBack Power Systems introduces a new idea - a combined battery cabinet and system component rack that is changing how renewable energy systems are installed.

The **PSR** saves time, money and space by combining the batteries, disconnects, overcurrent protection devices and even the inverter/charger into a single enclosure.

The **PSR** is shipped knocked down for ease of shipment, storage and installation.

The PSR is also available frame only (**PSR-FO**) or insulated rainproof outdoor version (**PSR-3R**)

PSR – *Indoor version*

PSR-FO *with Group 31 batteries*

43" high x 34" wide x 17" deep
PSR shipping weight: 110 lbs

Standard Features and Components

- ETL listed indoor powder coated steel enclosure with internal support frame , shelves and removable side/top panels (**PSR** version)
- Holds up to twelve Group 27/31, eight T105, four L16, or even four 8D type batteries
- Shipped knocked down for easy shipping and storage – electric screwdriver bit tool included
- All sides and top can be removed with conduit attached on the **PSR** and **PSR-3R** versions
- Includes DC breaker bracket which holds up to five small breakers and one large breaker
- Easily connected to various power inverters or the OutBack **PSDC** via 2" conduit
- Available with or without the circuit breakers included – easily added option in the field
- **PSR**s can be directly mated end to end for large storage battery systems

Optional Components

- **PSR-SK** - Additional shelf kit for use with more batteries or components
- One **OBDC-100, 175** or **250** DC breaker for disconnecting the inverter/battery system
- **OBDC-60** - PV array disconnect 60 amp DC
- **OBDC-GFP/2** - Dual circuit 60 amp PV ground fault protection system for one or two PV controllers (only one OBDC-GFP/2 fits)
- **OBDC15** and **OBDC-30** breakers for DC loads
- **PSR-SZ4** - Seismic zone 4 Kit to meet UBC earthquake safety requirements
- **PSR-SCT** - Spill Containment Tray for one shelf – holds up to four Group 31, T105 or L16 batteries or one 8D battery
  Molded Green Polyethylene plastic
- **PSR-HDT** - Heavy Duty Top for mounting an SW series inverter directly on top of a PSR cabinet – indoor use only
- **PSR-BCK** – Breaker cover kit for PSR only
- **PSR-MP** - Mounting plate for components such as inverters or PV charge controllers

A NEW IDEA for PV system design and integration

OutBack Power Systems, Inc. Tel 360.435.6030 Fax 360.435.6019
19009 62nd Ave NE, Arlington, WA 98223 USA www.outbackpower.com

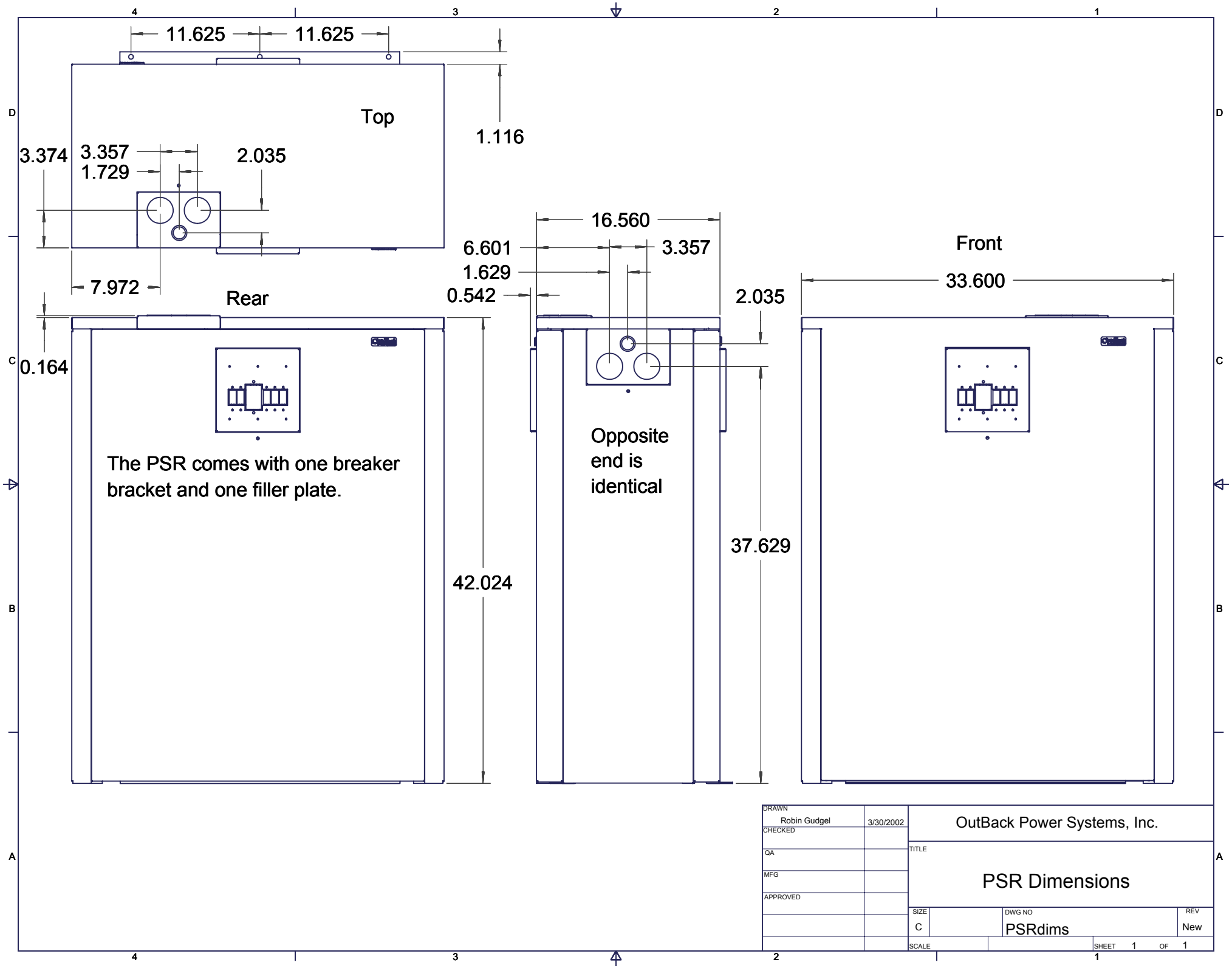
11.625
11.625
Top
1.116
3.374
3.357
1.729
2.035
7.972
Rear
0.164
The PSR comes with one breaker bracket and one filler plate.
42.024
16.560
6.601
3.357
1.629
0.542
2.035
Opposite end is identical
37.629
Front
33.600
DRAWN
Robin Gudgel
3/30/2002
CHECKED
QA
MFG
APPROVED
OutBack Power Systems, Inc.
TITLE
PSR Dimensions
SIZE
C
DWG NO
PSRdims
REV
New
SCALE
SHEET 1 OF 1

FLEXware 1000

For applications with large power requirements such as large residential, commercial or village power systems. The FLEXware 1000 system architecture is capable of supporting up to four OutBack FX Series Inverter/Chargers, four MX60 Charge Controllers, and all the required AC and DC components and wiring. Utilizing a compact design, FLEXware 1000 AC and DC enclosures accommodate all of the essential protective devices with lots of room for additional breakers and large cable connections and can be mounted either vertically or horizontally.

Breaker Configuration Diagram

AC Side

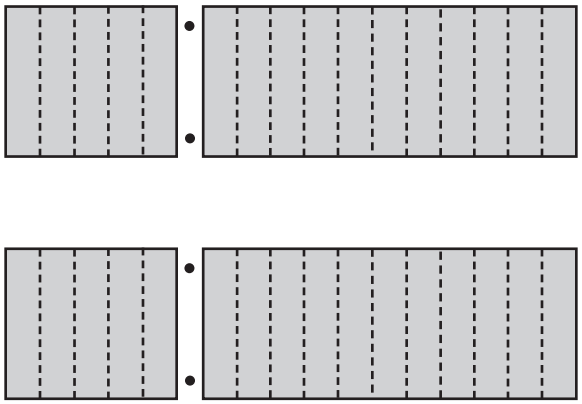

Holds up to thirty-two DIN mount AC breakers (not included). Support for optional AC Input-Output-Bypass Assembly. AC breakers are rated from 10-60 Amps of AC current.

DC Side

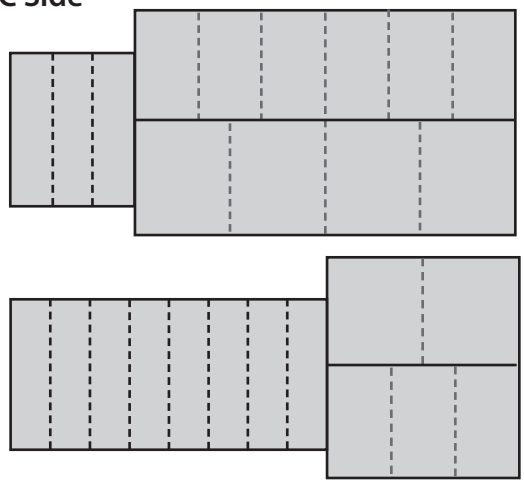

Holds up to eleven small 0.75" (19 mm) wide, nine medium 1" (26 mm) wide or six large 1.5" (32 mm) wide DC rated breakers. The small are rated for 1-80 Amps, the medium for 100 or 125 Amps and the large are rated for 175 or 250 Amps of DC current.

Knockout Location Diagram

Left
- (4) 2" knockout (2.468" diameter)
- (9) 1" knockout (1.359" diameter)
- (2) Duplex GFCI Outlet knockout

Back
- (2) 2" knockout (2.468" diameter)
- (2) 1" knockout (1.359" diameter)

Right
- (17) 1" knockout (1.359" diameter)

Top
- (3) 1" knockout (1.359" diameter)
- (1) ¾" knockout (1.093" diameter)
- (4) 2" knockout (2.468" diameter)

Bottom
- (3) 1" knockout (1.359" diameter)
- (1) ¾" knockout (1.093" diameter)
- (4) 2" knockout (2.468" diameter)

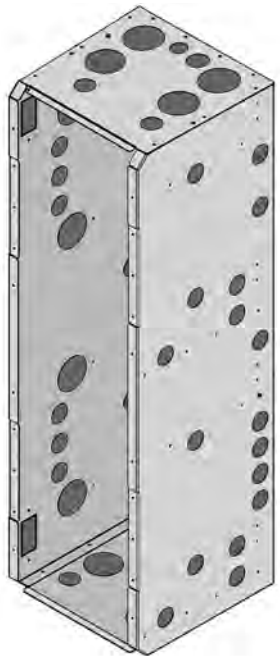

FLEXware 1000

Model: FW1000-DC

Description: DC enclosure which mounts at the DC side of three or four FX Inverter/Chargers. Supports eight terminal bus bars (not including GBB) and three shunt assemblies.

Includes: Ground bus bar, 1000 Amp DC, shunt assembly, positive bus, breaker mounting hardware, enclosure mounting hardware, two FW-SBUS and one FLEXware 1000 breaker bus

Unit Dimensions (H x W x D)	Shipping Dimensions (H x W x L)	Shipping Weight	Enclosure Type
38.5 x 11.4 x 12.1" (97.8 x 29.0 x 30.7 cm)	14.5 x 13.6 x 40.6" (36.8 x 34.5 x 103.1 cm)	21 lbs. (9.5 kg)	Type-1 indoor (IP30)

Model: FW1000-AC

Description: AC enclosure which mounts at the AC side of three or four FX Inverter/Chargers. Supports eight terminal bus bars and one FW-X240.

Includes: Ground bus bar, two DIN mounting brackets and FLEXware 1000 wiring raceway

Unit Dimensions (H x W x D)	Shipping Dimensions (H x W x L)	Shipping Weight	Enclosure Type
38.5 x 11.4 x 12.1" (97.8 x 29.0 x 30.7 cm)	14.5 x 13.6 x 40.6" (36.8 x 34.5 x 103.1 cm)	21 lbs. (9.5 kg)	Type-1 indoor (IP30)

- The FW1000 system utilizes two FW-MP mounting plate and a set of the DCA and ACA conduit adapters for each inverter/charger.
- DC and AC breakers, Input-Output-Bypass Assemblies and all other additional components sold separately.

FLEXware 1000 AC Input-Output-Bypass Assemblies

Field installable kit for bypassing the AC input to the AC output for inverter maintainence or installation. Also provides over-current protection.

Model: FW-IOB-T-120/208VAC

Includes: Nine 60A 120VAC single pole DIN mount breakers, sliding bypass interlock plate, wire and hardware kit

System Rating	Bypass Breaker	Input Breaker	Output Breaker
Three Phase 120/208 VAC 60 Amps 21.6 kW	Three Poles @ 60 Amps 21.6 kW	Three Poles @ 60 Amps 21.6 kW	Three Poles @ 60 Amps 21.6 kW

Model: FW-IOB-T-230/400VAC

Includes: Nine 30A 230VAC single pole DIN mount breakers, sliding bypass interlock plate, wire and hardware kit

System Rating	Bypass Breaker	Input Breaker	Output Breaker
Three Phase 230/400 VAC 30 Amps 20.7 kW	Three Poles @ 30 Amps 20.7 kW	Three Poles @ 30 Amps 20.7 kW	Three Poles @ 30 Amps 20.7 kW

Model: FW-IOB-Q-120/240VAC

Includes: Twelve 60A 120VAC single pole DIN mount breakers, sliding bypass interlock plate, wire and hardware kit

System Rating	Bypass Breaker	Input Breaker	Output Breaker
Split Phase 120/240 VAC 120 Amps 28.8 kW	Four Poles @ 60 Amps 28.8 kW	Four Poles @ 60 Amps 28.8 kW	Four Poles @ 60 Amps 28.8 kW

Model: FW-IOB-Q-120VAC

Includes: Twelve 60A 120VAC single pole DIN mount breakers, sliding bypass interlock plate, wire and hardware kit

System Rating	Bypass Breaker	Input Breaker	Output Breaker
Single Phase 120 VAC 240 Amps 28.8 kW	Four Poles @ 60 Amps 28.8 kW	Four Poles @ 60 Amps 28.8 kW	Four Poles @ 60 Amps 28.8 kW

Model: FW-IOB-Q-230VAC

Includes: Twelve 30A 230VAC single pole DIN mount breakers, sliding bypass interlock plate, wire and hardware kit

System Rating	Bypass Breaker	Input Breaker	Output Breaker
Single Phase 230 VAC 120 Amps 27.6 kW	Four Poles @ 30 Amps 27.6 kW	Four Poles @ 30 Amps 27.6 kW	Four Poles @ 30 Amps 27.6 kW

FLEXware MP

The FLEXware MP is a one piece, powder-coated aluminum mounting plate for FLEXware 500 and FLEXware 1000 enclosures. Utilizing stainless steel mounting hardware, the integrated locating bolts make installation quick and easy by providing guides to line up enclosures and inverter/chargers. A single FLEXware MP is designed to accommodate a FLEXware 500 while two FLEXware MPs are utilized in a FLEXware 1000 configuration.

Single MP Configuration for FLEXware 500

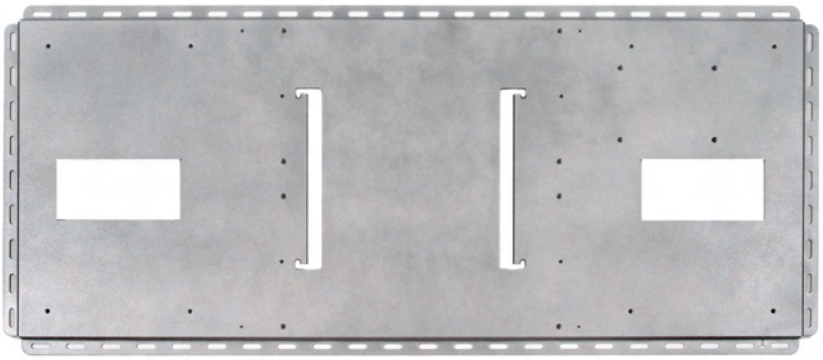

Dual MP Configuration for FLEXware 1000

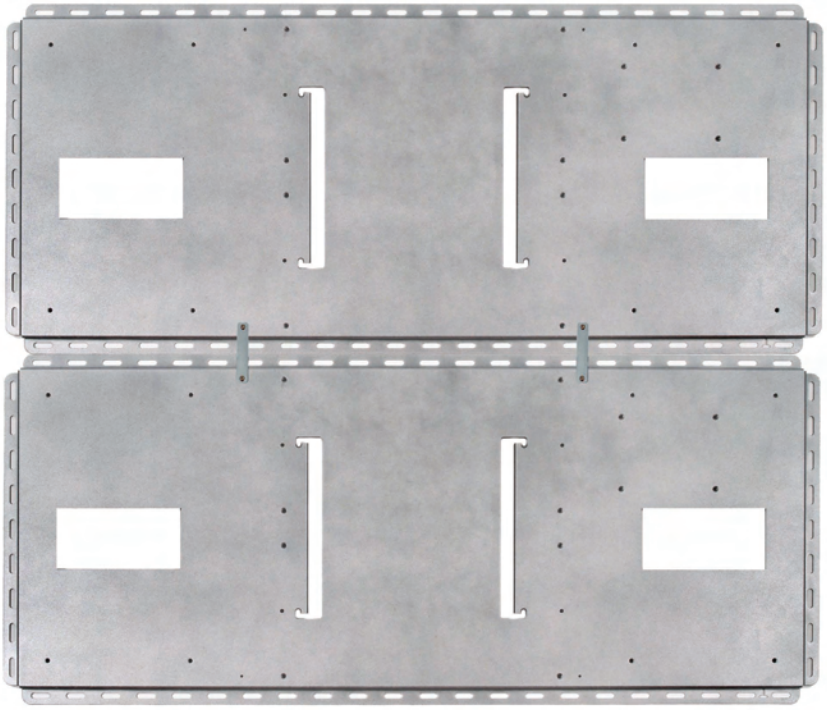

Model: FW-MP

Description: FLEXware system mounting plate

Unit Dimensions (H x W x D)	Shipping Dimensions (H x W x L)	Shipping Weight
20.3 x 46.3 x .8" (51.6 x 117.6 x 2.1 cm)	1.15 x 22.9 x 48.4" (2.9 x 58.2 x 123 cm)	14 lbs. (6.4 kg)

Components

OutBack DIN Mount Breakers

DIN rail mountable, hydraulic-magnetic type breakers that can be used for input, output or load circuits.

Model	Current Rating	Voltage Rating	Branch Circuit	Variation	Width
OBB-15-120VAC-DIN	15 Amp	120VAC 50/60Hz	10k AIC	Single pole	0.50" (13 mm
OBB-15D-240VAC-DIN	15 Amp	120/240VAC 50/60Hz	10k AIC	Dual pole	1.0" (26 mm)
OBB-20-120VAC-DIN	20 Amp	120VAC 50/60Hz	10k AIC	Single pole	0.50" (13 mm)
OBB-20D-240VAC-DIN	20 Amp	120/240VAC 50/60Hz	10k AIC	Dual pole	1.0" (26 mm)
OBB-25D-240VAC-DIN	25 Amp	120/240VAC 50/60Hz	10k AIC	Dual pole	1.0" (26 mm)
OBB-10-277VAC-DIN	10 Amp	277VAC 50/60Hz	N/A	Single pole	0.5" (13 mm)
OBB-15-277VAC-DIN	15 Amp	277VAC 50/60HZ	N/A	Single pole	0.5" (13 mm)
OBB-30-277VAC-DIN	30 Amp	277VAC 50/60Hz	N/A	Single pole	0.5" (13 mm)
OBB-30D-480VAC-DIN	30 Amp	277/480VAC 50/60Hz	N/A	Dual pole	1.0" (26 mm)
OBB-30T-480VAC-DIN	30 Amp	277/480VAC 50/60Hz	N/A	Three pole	1.5" (39 mm)
OBB-50-277VAC-DIN	50 Amp	277VAC 50/60Hz	N/A	Single pole	0.5" (13 mm)
OBB-50D-480VAC-DIN	50 Amp	277/480VAC 50/60Hz	N/A	Dual pole	1.0" (26 mm)
OBB-50T-480VAC-DIN	50 Amp	277/480VAC 50/60Hz	N/A	Three pole	1.5" (39 mm)
OBB-60-277VAC-DIN	60 Amp	277VAC 50/60Hz	N/A	Single pole	0.5" (13 mm)

- #14 to 2 AWG clamp terminals

OutBack Panel Mount Breakers

Panel mounted hydraulic-magnetic type breakers that can be used for DC sources, inverters or load circuits.

Model	Current Rating	Voltage Rating	Branch Circuit	Terminals	Width
OBB-1-125VDC120VAC-PNL	1 Amp	125VDC 120VAC	10k AIC	1/4" stud	0.75" (19 mm)
OBB-5-125VDC120VAC-PNL	5 Amp	125VDC 120VAC	10k AIC	1/4" stud	0.75" (19 mm)
OBB-10-125VDC120VAC-PNL	10 Amp	125VDC 120VAC	10k AIC	1/4" stud	0.75" (19 mm)
OBB-15-125VDC120VAC-PNL	15 Amp	125VDC 120VAC	10k AIC	1/4" stud	0.75" (19 mm)
OBB-20-125VDC120VAC-PNL	20 Amp	125VDC 120VAC	10k AIC	1/4" stud	0.75" (19 mm)
OBB-30-125VDC120VAC-PNL	30 Amp	125VDC 120VAC	10k AIC	1/4" stud	0.75" (19 mm)
OBB-40-125VDC120VAC-PNL	40 Amp	125VDC 120VAC	10k AIC	1/4" stud	0.75" (19 mm)
OBB-50-125VDC120VAC-PNL	50 Amp	125VDC 120VAC	10k AIC	1/4" stud	0.75" (19 mm)
OBB-60-125VDC120VAC-PNL	60 Amp	125VDC 120VAC	10k AIC	1/4" stud	0.75" (19 mm)
OBB-80-125VDC-PNL	80 Amp	125VDC	N/A	1/4" stud	0.75" (19 mm)
OBB-100-125VDC-PNL	100 Amp	125VDC	N/A	5/16" stud	1.0" (26 mm)
OBB-125-125VDC-PNL	125 Amp	125VDC	N/A	5/16" stud	1.0" (26 mm)
OBB-175-125VDC-PNL	175 Amp	125VDC	N/A	3/8" stud	1.5" (39 mm)
OBB-250-125VDC-PNL	250 Amp	125VDC	N/A	3/8" stud	1.5" (39 mm)

- ETL Listed for 15O VDC max open circuit. For PSPV applications only.

Components

OutBack PV Ground Fault Protection System

Ground fault protection is required by the NEC for PV arrays mounted on or within a specified vicinity of residential dwelling roofs as a safety precaution. The OutBack PV Ground Fault Protection System protects wiring and system components for one or two PV arrays when used in a FLEXware 250, FLEXware 500 or FLEXware 1000.

Model	Description	Terminals	Width
OBB-GFP-80D-125VDC-PNL	OutBack PV Ground Fault Protection 80 Amp 125VDC dual pole panel mount	1/4" stud	2.25" (57 mm)

Uses three 3/4" wide panel mount breaker spaces

X-240 Auto-transformer

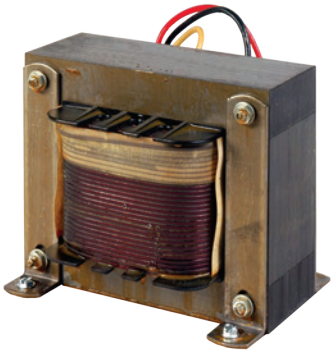

Designed to be housed within the FLEXware 500 or FLEXware 1000 AC enclosures. The FW-X240 auto transformer with a 120 volt/30 Amp primary and secondary winding can be used for step-up, step-down, generator and split phase output balancing for series stacked inverters. It can transfer 2kW from one 120 VAC leg of a generator or the total rating of an OutBack stacked series/parallel 120/240 VAC inverter/charger configuration.

Model	Description	Includes
FW-X240	Auto-transformer 4 kVA 120/240VAC 60Hz with 25 Amp dual pole breaker for mounting inside of FLEXware 500-AC or FLEXware 1000-AC	Auto-transformer , 25 Amp dual pole breaker and mounting hardware

DC Bus Bars

OutBack Power Systems DC bus bars are designed to enable the most complex of code compliant DC cable connections.

Model	Description	Includes
FW-BBUS	Breaker Bus allows connection of two 175-250 Amp, three 100-125 Amp, four 1-80 Amp DC breakers or three 500 Amp DC current shunts	Plated copper plate rated for 500 Amps
FW-CBUS	Combiner Bus connects up to eight DIN mounted breakers or four DIN mounted fuse holders	One 1/0 AWG set screw lug - plated copper rated for 200 Amps
FW-SBUS	Shunt Bus allows up to four high current cable connections on same side of DC shunt	Two 3/8 inch bolts solid brass rated for 1000 Amps

DC Current Shunts

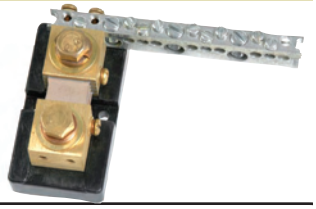

When used with an amp hour meter OutBack Power Systems DC current shunt kits can provide valuable insight into the status of your batteries or DC power source. One shunt kit is included standard on FLEXware 500 and FLEXware 1000 DC enclosures.

Model	Description	Includes
FW-SHUNT250	500 Amp DC current shunt with attached terminal bus bar for mounting on top of a FX Series Inverter/Charger	Shunt, mounting hardware and terminal bus bar for connection to FX Inverter's DC negative terminal
FW-SHUNT500	500 Amp DC current shunt with attached terminal bus bar	Shunt, terminal bus bar and one white insulator and mounting screws

Components

Conduit Adapters

Allows connection of the FX and VFX Inverter/Chargers to FLEXware 500 and FLEXware 1000 enclosures, one ACA and DCA required per FX Inverter/Charger.

Model	Description	Includes
ACA	Adapter for AC end of FX Inverter/Charger	ACA, bushing and mounting hardware
DCA	Adapter for DC end of FX Inverter/Charger	DCA, bushing and mounting hardware

Charge Controller Mounting Brackets

FW-CCB and FW-CCB2 mounting brackets allow OutBack Power Systems charge controllers to be mounted on the side of FW500-DC or FW1000-DC enclosures. FW-CCB2-T mounting bracket allows OutBack Power Systems charge controllers to be mounted on the top of FW500-DC or FW1000-DC enclosures.

Model	Description	Includes
FW-CCB	Bracket for mounting a single MX60 Charge Controller	Bracket, bushings and mounting hardware
FW-CCB2	Bracket for mounting two MX60 Charge Controllers	Brackets, bushings and mounting hardware
FW-CCB2-T	Bracket for mounting two MX60 Charge Controllers	Bracket, bushings and mounting hardware

DC Cable Assemblies

DC interconnect cable assemblies for wiring between inverter/chargers and breakers or DC shunts. Can also be used as battery interconnects. The THW type cable assemblies are UL listed and NEC compliant with a maximum voltage rating of 1000VDC and a temperature rating of 105°C.

Model	Description	Hole to hole length
FW-CABLE250-15R	250 Amp 4/0 AWG DC cable 15 inches (380 mm) long with ring terminals on both ends and red heat shrink. For connection from 250 Amp DC breaker to inverter positive terminal.	19" (483mm)
FW-CABLE175-15R	175 Amp 2/0 AWG DC cable 15 inches (380 mm) long with ring terminals on both ends and red heat shrink. For connection from 175 Amp DC breaker to inverter positive terminal.	19" (483 mm)
FW-CABLE250-36R	250 Amp 4/0 AWG DC cable 36 inches (915 mm) long with ring terminals on both ends and red heat shrink. For connection from 250 Amp DC breaker to inverter positive terminal.	40" (1016 mm)
FW-CABLE175-36R	175 Amp 2/0 AWG DC cable 36 inches (915 mm) long with ring terminals on both ends and red heat shrink. For connection from 175 Amp DC breaker to inverter positive terminal.	40" (1016 mm)
FW-CABLE250-36W	250 Amp 4/0 AWG DC cable 36 inches (915 mm) long with ring terminals on both ends and white heat shrink. For connection from DC current shunt to inverter negative terminal.	40" (1016 mm)
FW-CABLE175-36W	175 Amp 2/0 AWG DC cable 36 inches (915 mm) long with ring terminals on both ends and white heat shrink. For connection from DC current shunt to inverter negative terminal.	40" (1016 mm)

- All ring lugs have 3/8" (9.53 mm) diameter hole.

PSPV

The rainproof PSPV is a solar array combiner which can be used with a wide variety of system configurations and solar module types. Approved for installation on both vertical and angled surfaces with a slope as little as 3-in-12 pitch - or pole mounted (brackets not included), the PSPV is designed to provide NEC code compliant series over-current protection of the wiring of multiple PV modules or sub arrays for connection to charge controllers, inverters or other system components. The PSPV is easily field configurable to match your PV system design and amperage requirements. For negative or positive grounded PV systems.

Breaker Configuration Diagram

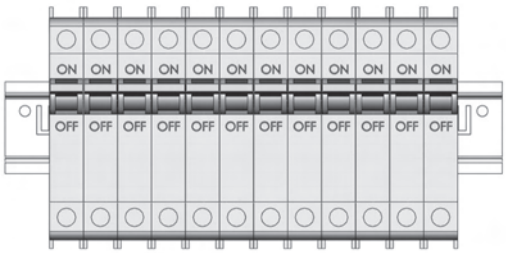

Fuse Configuration Diagram

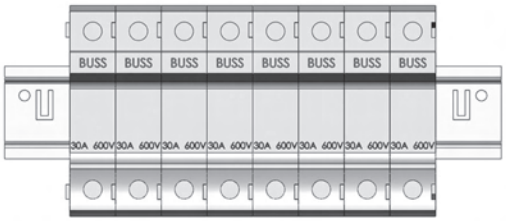

Holds up to twelve OutBack Power Systems DIN mounted breakers for PV array configurations of 12 to 72 VDC systems with a maximum open circuit voltage of 150 VDC or use eight OutBack Power Systems OBF "touch safe" type fuse holders for high voltage systems with a maximum open circuit voltage of 600 VDC

Knockouts

Left
- (1) ¾" knockout (0.875" diameter)

Right
- (1) ¾" knockout (0.875" diameter)

Back
- (1) combination 1" (1.093" diameter) 1 3/8" (1.375" diameter) knockout

Bottom
- (1) combination 1" (1.093" diameter), 1 3/8" (1.375" diameter) knockout
- (8) ¾" knockout (0.875" diameter)

Model: PSPV

Description: Powder coated aluminum PV array combiner box

Includes: Enclosure, dual combining bus bars, one terminal bus bar, two #1/0 AWG set-screw compression type box lug terminals and one #1/0 AWG ground lug

Unit Dimensions (H x W x D)	Shipping Dimensions (H x W x L)	Shipping Weight	Enclosure Rating
13.1 x 8.8 x 3.4" (34.1 x 22.4 x 8.6 cm)	16 x 12 x 7" (40.6 x 30.5 x 17.8 cm)	5 lbs (2.3 kg)	Type 3R (IP44)

PSPV

OutBack DC DIN Mount Breakers

DIN rail mount breakers are hydraulic-magnetic type and are not affected by high ambient temperatures.

Model	Current Rating	Voltage Rating*	Terminals	Width
OBB-1-125VDC-DIN	1 Amp	125VDC	#14 to 2 AWG clamp terminals	0.5" (13 mm)
OBB-2-125VDC-DIN	2 Amp	125VDC	#14 to 2 AWG clamp terminals	0.5" (13 mm)
OBB-3-125VDC-DIN	3 Amp	125VDC	#14 to 2 AWG clamp terminals	0.5" (13 mm)
OBB-4-125VDC-DIN	4 Amp	125VDC	#14 to 2 AWG clamp terminals	0.5" (13 mm)
OBB-5-125VDC-DIN	5 Amp	125VDC	#14 to 2 AWG clamp terminals	0.5" (13 mm)
OBB-6-125VDC-DIN	6 Amp	125VDC	#14 to 2 AWG clamp terminals	0.5" (13 mm)
OBB-8-125VDC-DIN	8 Amp	125VDC	#14 to 2 AWG clamp terminals	0.5" (13 mm)
OBB-9-125VDC-DIN	9 Amp	125VDC	#14 to 2 AWG clamp terminals	0.5" (13 mm)
OBB-10-125VDC-DIN	10 Amp	125VDC	#14 to 2 AWG clamp terminals	0.5" (13 mm)
OBB-15-125VDC-DIN	15 Amp	125VDC	#14 to 2 AWG clamp terminals	0.5" (13 mm)
OBB-20-125VDC-DIN	20 Amp	125VDC	#14 to 2 AWG clamp terminals	0.5" (13 mm)
OBB-30-125VDC-DIN	30 Amp	125VDC	#14 to 2 AWG clamp terminals	0.5" (13 mm)
OBB-50-125VDC-DIN	50 Amp	125VDC	#14 to 2 AWG clamp terminals	0.5" (13 mm)
OBB-60-125VDC-DIN	60 Amp	125VDC	#14 to 2 AWG clamp terminals	0.5" (13 mm)

* Approved for maximum VOC of 15O VDC by ETL for PV array applications only.

OutBack High Voltage DIN Mount Fuse Holders and Fuses

Fuse holders are DIN rail mount with #8 AWG set-screw type compression terminals. Touch-safe design and not rated for load make or load break usage. Maximum of eight fuseholders in one PSPV enclosure.

Model	Description	Current Rating	Voltage Rating	Width
OBF-6-600VDC	Fuse	6 Amp	600VDC	N/A
OBF-10-600VDC	Fuse	10 Amp	600VDC	N/A
OBF-15-600VDC	Fuse	15 Amp	600VDC	N/A
OBFH-30-600VDC-DIN	Fuse Holder	30 Amp	600VDC	0.7" (18 mm)

Terminal Bus Bars

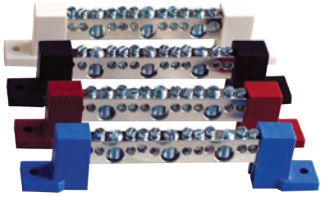

Used for adding more wire terminations or for isolating multiple positive/negative circuits. All TBB models have three #1/0 to 14 AWG and eight #6 to 14 AWG screw type compression terminals, which means no ring lugs are required. Available with black, white, red, blue and brown insulators. All required TBBs are included with the AC Input-Output-Bypass Assemblies.

Model	Description	Terminals
TBB-GROUND	Ground/Neutral terminal bus bar with mounting screws (no insulators)	Three #1/0 to 14 AWG and Eight #6 to 14 AWG screw type compression
TBB-BLACK	Bus bar with black insulators with mounting screws - use as L1 hot or DC negative	Three #1/0 to 14 AWG and Eight #6 to 14 AWG screw type compression terminals
TBB-BLUE	Bus bar with blue insulators with mounting screws - use as Phase C on three phase systems	Three #1/0 to 14 AWG and Eight #6 to 14 AWG screw type compression terminals
TBB-RED	Bus bar with red insulators with mounting screws - use as L2 hot or DC positive	Three #1/0 to 14 AWG and Eight #6 to 14 AWG screw type compression terminals
TBB-WHITE	Bus bar with white insulators with mounting screws - use as AC neutral or DC negative	Three #1/0 to 14 AWG and Eight #6 to 14 AWG screw type compression terminals
TBB-BROWN	Bus bar with brown insulators with mounting screws - use as AC hot in European systems	Three #1/0 to 14 AWG and Eight #6 to 14 AWG screw type compression terminals

Battery Specifications

Manufacturer Contact:
MK Battery
1645 South Sinclair Street
Anaheim, CA 92806

Stock Number: S8D SLD G LTP

Module Voltage: 12V

Bus Voltage/System Voltage: 48V

Number of Modules: 52

Cost: $440

S8D SLD G LTP

Valve-Regulated, Gelled-Electrolyte Battery

SPECIFICATIONS

Nominal Voltage (V)	12V
Capacity at C/100	265Ah
Weight	157 (71.2 kg)
Plate Alloy	Lead Calcium
Posts	Forged terminals & bushings
Container/Cover	Polypropylene
Operating Temperature Range	-76°F (-60°C) – 140°F (60°C)
Charge Voltage @ 68°F (20°C)	
Cycle	2.30 - 2.35 VPC
Float	2.25 - 2.30 VPC
Vent	Self-sealing (2 PSI operation)
Electrolyte	Sulfuric acid thixotropic gel
Resistance	4.0 Milliohms (full charge)
Terminal	T975

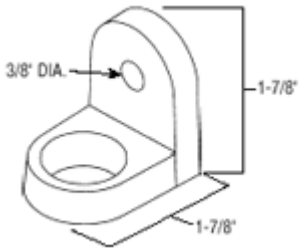

Rated non-spillable by ICAO, IATA and DOT
Approved by CEC
Made in the U.S.A by East Penn Manufacturing

Distributed by:

DIMENSIONS

Length (mm)	**20.75 (527 mm)**
Width (mm)	**11 (279 mm)**
Height (mm)	**10.63 (270 mm)**

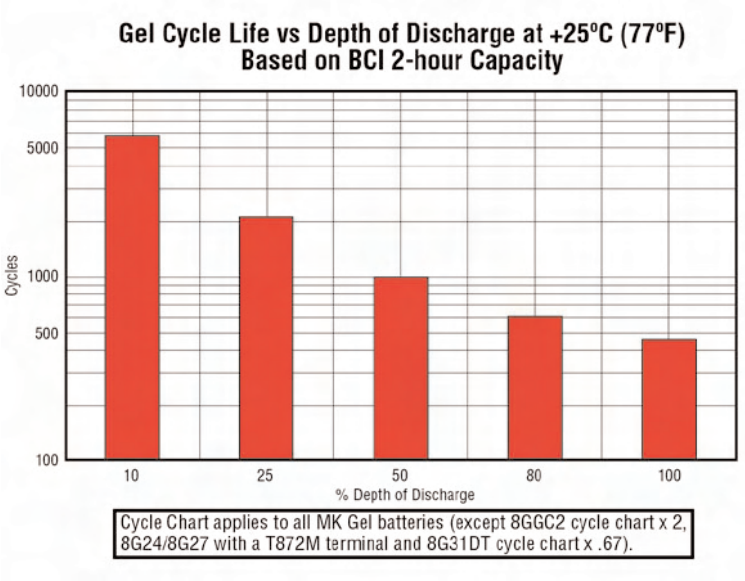

MK Battery
1645 South Sinclair Street • Anaheim, California 92806
Toll Free: 800-372-9253 • Fax: 714-937-0818 • E-Mail: sales@mkbattery.com

MATERIAL SAFETY DATA SHEET

EFFECTIVE SEPTEMBER , 2003

U.S. BATTERY MFG. CO.
1675 SAMPSON AVE
CORONA, CA. 91719-1889

•

U.S. BATTERY MFG. CO.
1895 TOBACCO RD.
AUGUSTA, GA. 30906

•

U.S. BATTERY MFG. CO.
653 INDUSTRIAL PARK DR.
EVANS, GA. 30809

TRANSPORTATION EMERGENCY NO:
INFOTRAC: (800) 535-5053 / INT'L (352) 323-3500

GENERAL INFORMATION NO:
SAFETY DEPT. (909) 371-8090

SECTION I

PRODUCT NAME: BATTERY, WET, FILLED WITH ACID
CHEMICAL NAME: LEAD / ACID STORAGE BATTERY
CHEMICAL FAMILY: TOXIC AND CORROSIVE MATERIAL
FORMULA: LEAD / ACID

SECTION II

MATERIALS	CAS NUMBER	PERCENT	TLV (units)
LEAD / LEAD OXIDE	7439-92-1	60	0.05
ANTIMONY ALLOY	7440-36-0	1-5	0.5
ARSENIC	7440-38-2	LESS THAN 1%	LESS THAN 1%
SULFURIC ACID	7664-93-9	10-30	10-30

SECTION III

PHYSICAL / CHEMICAL CHARACTERISTICS

BOILING POINT: APPOX. 203°F
VAPOR PRESSURE (mm Hg): 10@18°F
VAPOR DENSITY (air = 1): LESS THAN 1
SOLUBILITY IN WATER: 100%
PERCENT, VOLATILE BY VOLUME(%): 10-30%
EVAPORATION RATE: -1
APPEARANCE AND ODOR: CLEAR LIQUID, PUNGENT ODOR (SHARP PENETRATING ODOR)

SECTION IV

FIRE AND EXPLOSION HAZARD DATA

FLASH POINT: N/A
FLAMMABLE LIMITS: Lel 4.0 Uel 74.2
EXTINGUISHING MEDIA: HALON OR DRY CHEMICAL EXTINGUISHER
UNUSUAL FIRE AND EXPLOSION HAZARDS:
HYDROGEN GAS AND SULFURIC ACID VAPORS ARE GENERATED UPON OVERCHARGE. VENTILATE CHARGING AREAS.

SECTION V

HEALTH HAZARD DATA

THRESHOLD LIMIT VALUE: SEE SECTION II
EFFECTS OF OVEREXPOSURE:
EYES: SERVE BURNS, CORNEA DAMAGE AND BLINDNESS.
SKIN: SERVE IRRITATION, BURNING AND ULCERATION.
INHALATION: BREATHING OF VAPORS OR MIST MAY CAUSE RESPIRATORY DAMAGE.
INGESTION: BURNS TO MOUTH,THROAT AND INTESTINAL TRACT.

SECTION V (continued)

EMERGENCY AND FIRST AID PROCEDURES:

SEEK MEDICAL ATTENTION
FOR ALL EXPOSURE EMERGENCIES

EYES: WASH WITH COPIOUS QUANTITIES OF RUNNING WATER FOR 15 MINUTES.

SKIN: FLUSH AREAS WITH RUNNING WATER FOR 15 MINUTES.

INGESTION: GIVE MILK OR DRINK. DO NOT INDUCE VOMITING.

SECTION VI

REACTIVITY DATA

STABILITY: U-3,F-0,S-2,R-~~W~~ UNSTABLE

CONDITIONS TO AVOID: AVOID OVERCHARGING AND SMOKING IN THE VICINITY OF CHARGING BATTERIES. AVOID SPARKS. POOR VENTILATION

INCOMPATIBILITY: WATER: MAY CAUSE ELECTRIC SHOCK AND REACTION.

HAZARDOUS POLYMERIZATION: WILL NOT OCCUR

SECTION VII

SPILL OR LEAK PROCEDURES

IF MATERIAL IS RELEASED OR SPILLED TAKE THE FOLLOWING ACTIONS:
CONTAIN SPILLED MATERIAL, WASH WITH WATER OR NEUTRALIZE WITH SODIUM CARBONATE OR BICARBONATE.

WASTE DISPOSAL METHOD: DISPOSE HAS GENERAL WASTE

SECTION VIII

SPECIAL PROTECTION INFORMATION

RESPIRATORY PROTECTION: SULFURIC ACID MIST / HALF MASK RESPIRATOR WITH ACID MIST FILTERS.

VENTILATION: LOCAL EXHAUST PREFERRED
MECHANICAL ACCEPTABLE AT 1 TO 4 CHANGES / PER / HOUR

PROTECTIVE GLOVES: LATEX / RUBBER GLOVES

EYE PROTECTION: GOGGLES OR FACE SHIELD

OTHER PROTECTIVE EQUIPMENT: RUBBER OR PLASTIC APRON

SECTION IX

SPECIAL PRECAUTIONS

WHEN HANDLING AND STORING, KEEP AWAY FROM FLAMES DURING AND IMMEDIATELY AFTER CHARGING.
AVOID PROLONGED OVERCHARGING.

TRANSPORTATION INFORMATION

DOT SHIPPING NAME: BATTERIES, WET FILLED WITH ACID, ELECTRIC STORAGE

IDENTIFICATION NUMBER: UN 2794

HAZARD CLASS: 8

SHIPPING LABELS: CORROSIVE

PLACARD (when required) CORROSIVE

PROPOSITION 65

WARNING:

LEAD AND IT'S COMPOUNDS ARE CHEMICALS KNOW TO THE STATE OF CALIFORNIA TO CAUSE REPRODUCTIVE HARM TO BOTH MALES AND FEMALES AND TO CAUSE BIRTH DEFECTS.

Style 301 1:8 Scale

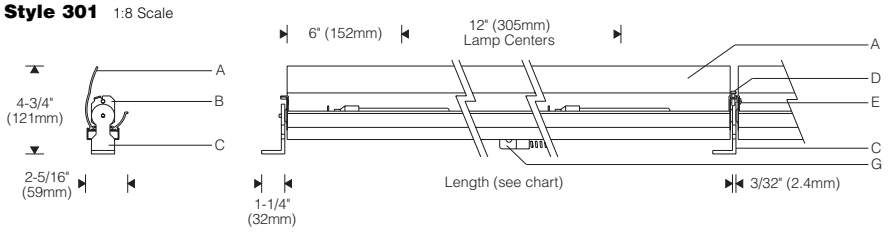

Cove

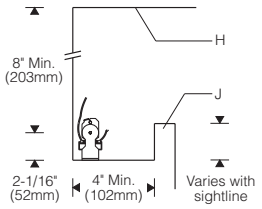

Joint 1:4 Scale

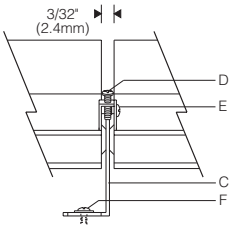

No. Lamps	Length
2	24" (610mm)
3	36" (914mm)
4	48" (1219mm)
5	60" (1524mm)
6	72" (1829mm)
7	84" (2134mm)
8	96" (2438mm)
9	108" (2743mm)
10	120" (3048mm)

Note: Finish interior of cove matte white.

Specifications

A Specular extruded aluminum reflector
B Stainless steel lamp-holder/support brackets
C Aluminum L-shaped mounting brackets
D Rotation locking screw
E Joiner/alignment screw
F Mounting fastener (by others)
G Flexible metal conduit with 90° connector
H Ceiling
J Architectural cove (for design guidance, see Applications Section)

Finish:
Reflector - extruded high purity aluminum with clear anodized specular finish. Mounting brackets - mill finish aluminum. All luminaire hardware - stainless steel.

Mounting:
L-shaped mounting brackets can be base or wall mounted. Two brackets are supplied for each reflector. Reflectors can be mounted individually or joined together to form a continuous row. When mounted in a row, one bracket supports adjacent reflectors for minimum spacing.

Reflector aiming is adjustable and is fixed in position by rotation locking screws at each mounting bracket. When mounted in a continuous row, joiner screws lock reflectors together allowing all in the row to be aimed together.

Electrical:
Use 90°C wire for supply connections. 5' (1.5m) wire leads exit bottom of reflector. One 90° connector and 4' (1.2m) of flexible metal conduit are provided.

Intermediate base lampholders for use with 25W or 40W T6-1/2 frosted incandescent lamps. Lamps are spaced 12" on center.

Standard:
UL listed or CSA certified.

Features

- *Linear incandescent uplight for warm, concealed lighting for residences, retail, and executive offices*
- *Compact and flexible - easily concealed; dimmable*
- *Adjustable - all reflectors in a row join and aim together*
- *Create rows, fit niches of any length - 2' to 10' modules*
- *Durable - all parts are aluminum or stainless steel*

C 10.0

Performance

Two parabolic reflector sections drive light across the ceiling from one edge. An elliptical section shields the lamp from normal viewing angles and redirects its light to a parabola. Glare is minimized and asymmetry of the beam is maximized resulting in high beam efficiency and superior surface uniformity.

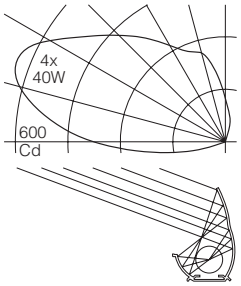

For complete photometrics, visit www.elliptipar.com

To form a Catalog Number

I 3 0 1 - [ ] - S - 0 0 - A - [ ] [ ]

1 2 3 4 5 6 7 8

1 Source

I = Incandescent

2 Style

301 = Small concealed

3 Lamp

[ ] [ ] = **Lamp Code**

Lamp Wattage, specify **25** or **40**

Number of lamps per reflector, specify **02**, **03**, **04**, **05**, **06**, **07**, **08**, **09** or **10**

Example: **0640** = 72" reflector with six 40W lamps

4 Mounting

S = L-shaped brackets for base or wall mounting

5 Finish

00 = Bright anodized reflector

6 Voltage

A = 120V

7 Option (see Accessories Section for specifications)

00 = No options
0Y = Modified to comply with New York City code.
XX = For modification not listed, include detailed description. Consult factory prior to specification.

8 Standard

0 = UL, Underwriters Laboratories
J = CSA, Canadian Standards Association

Project: [ ] Type: [ ]

Example

I301 - 0940 - S - 00 - A - 000

Small concealed incandescent unit consisting of nine 40W T6-1/2 incandescent lamps in nominal 108" reflector. L-shaped mounting brackets. 120V. UL.

elliptipar
114 Boston Post Road, West Haven, Connecticut 06516, USA
Voice 203.931.4455 • Fax 203.931.4464 • **www.elliptipar.com**

PaneLux™

FEATURES

- High Performance Light Emitting Diode Fixture to be used in general illumination.
- Slim profile used in accent lighting in design applications and as a replacement for overhead bathroom and kitchen fixtures.
- Sleek design allows for discrete placement in small areas such as under-cabinet lighting.
- Choice of four different correlated color temperature white light options: 3200°K, 4400°K, 5500°K and 6700°K.
- Dimmable capabilities allows intensity abatement down to less than five percent with no shift in Correlated Color Temperature.
- Use of High Efficiency White LEDs create no UV radiation making installation ideal in sensitive locations such as museums and shops.
- Unique mounting allows flush fit to surfaces.
- Guaranteed for three years against mechanical defects in manufacturing.

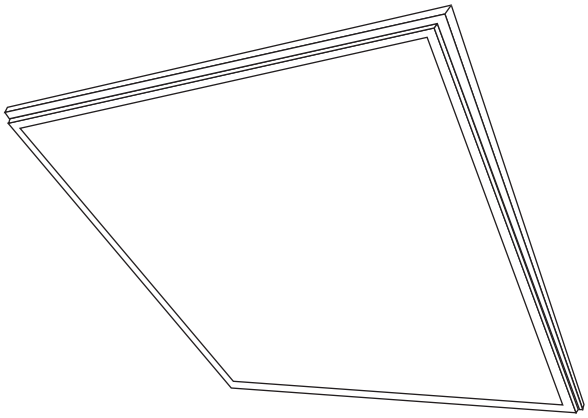

SPECIFICATIONS

Color Temperature Range:	3200°K 4400°K 5500°K 6700°K
Source:	High Efficiency White LED
Beam Angle:	Wide Intensity Distribution
Housing:	Die Cast Aluminum
Lens:	Soft-focus PC
Listings:	UL

ELECTRICAL SPECIFICATION

Input Power:	110/277V; AC 50-60 Hz.
Power Consumption:	32 Watts

ORDERING GUIDE

MODEL NO.		SIZE		COLOR TEMP.		MOUNTING		VOLTAGE		OPTIONS
P2S	–	11	–		–	L	–		–	__/__/__
P2S		1 x 1		6700°K 5500°K 4400°K 3200°K		L = Standard Lay-in Grid SM = Surface Mount		110v 277v		RD = Remote Dimmer

21 Grand Ave. South #623, Palisades Park, New Jersey 07650
tel.: 201.945.6200 / fax: 201.624.7475 / e-mail: info@ledfolio.com / www.LEDfolio.com

LED folio corporation

Summary Data:

CIE Classification	Direct
Spacing Criterion (0-Deg.)	0.9
Spacing Criterion (90-Deg.)	0.9
Lumens/Lamp	1,400
No. of Lamps	1
Luminous Opening	Square
Luminous Width	0.5" (inches)
Luminous Length	12.0"
Luminous Height	12.0"
Input Watts	32
RP-1-93 VDT Conformance	Conforming

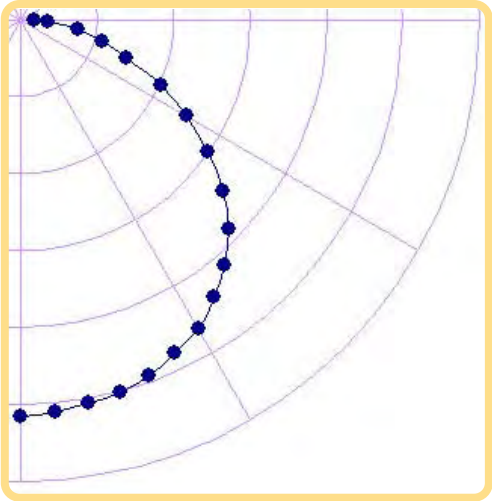

Zonal Lumens

Zone	Lumens	% Luminaire
0-30	208	25
30-60	624	52
60-90	184	23
0-180	1,400	100

Candle Intensity:

Angle	Degrees
0	258
5	256
10	253
15	251
20	246
25	239
30	232
35	220
40	208
45	192
50	173
55	149
60	125
65	101
70	73
75	55
80	38
85	18
90	9

Average Luminance

Angle	Luminance
0	2786
45	2932
55	2805
65	2580
75	2294
85	1610

Coefficient of Utilization Table (FCR = 20%)

Pcc..	80				70				50			30			10			0
Pw	70	50	30	10	70	50	30	10	50	30	10	50	30	10	50	30	10	0
RCR																		
0	117	117	117	117	114	114	114	114	109	109	109	104	104	104	100	100	100	98
1	106	101	97	93	103	95	91	88	95	91	88	91	88	85	87	85	83	81
2	96	87	80	75	93	82	77	72	82	77	72	79	74	70	76	72	69	66
3	87	76	68	61	85	72	65	60	72	65	60	69	63	59	66	62	58	55
4	79	67	58	51	77	63	56	50	63	56	50	61	55	50	59	53	49	47
5	73	60	51	44	71	57	49	43	57	49	43	55	48	43	53	47	42	40
6	67	54	45	38	65	51	43	38	51	43	38	49	42	37	48	42	37	35
7	62	48	40	33	60	46	39	33	46	39	33	45	38	33	43	37	32	30
8	58	44	36	30	56	42	35	29	42	35	29	41	34	29	40	34	29	27
9	54	40	32	27	52	39	31	26	39	31	26	38	31	26	37	30	26	24
10	50	37	29	24	49	36	29	24	36	29	24	35	28	24	34	28	24	22

21 Grand Ave. South #623, Palisades Park, New Jersey 07650
tel.: 201.945.6200 / fax: 201.624.7475 / e-mail: info@ledfolio.com / www.LEDfolio.com

LED folio corporation

Fire

FreeJack	MonoRail	Two-Circuit MonoRail	Kable Lite	TwinRail	T~trak™
			N/A		

PENDANT

RED

Shown approximately 35% actual size.

AMBER

COBALT

GREEN

SMOKE

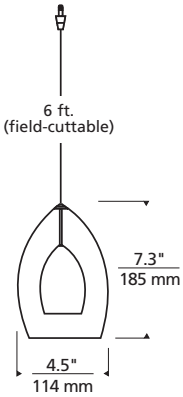

Socket terminates with FreeJack male connector, which may be installed into a system connector. Elements ordered with a system prefix include a connector for that system.

DESCRIPTION

Rich, translucent Murano glass surrounds a small frost raindrop glass. Includes six feet of field-cuttable suspension cable (custom lengths available).

SYSTEM

Available for FreeJack, MonoRail, Two-Circuit MonoRail, and TwinRail. For use on T~trak, order FreeJack version and T~trak FreeJack Connector (sold separately).
Not recommended for Kable Lite due to weight.

COLOR

Amber, cobalt, green, red, smoke.

FINISH

Antique bronze, chrome, gold, satin nickel.
TwinRail available in chrome only.

LAMP

Low-voltage 12 or 24 volt Halogen bi-pin up to 50 watts with Pyrex glass shield (included).

ACCESSORIES AND OPTICAL CONTROLS

None.

WEIGHT

2.15 lb./0.98 kg. ±

ORDERING INFORMATION

700	SYSTEM	FIR	COLOR	FINISH	VOLTAGE
	FJ FREEJACK		**A** AMBER	**Z** ANTIQUE BRONZE	12 VOLT
	MO MONORAIL		**B** COBALT	**C** CHROME	**24** 24 VOLT
	MO2 TWO-CIRCUIT MONORAIL		**G** GREEN	**G** GOLD	
			R RED	**S** SATIN NICKEL	
	TW TWIN RAIL		**K** SMOKE		

700 _____ FIR _____ _____ _____

FIXTURE TYPE: _____

JOB NAME: _____

TECH LIGHTING®

7400 Linder Avenue
Skokie, Illinois 60077

T 847.410.4400
F 847.410.4500

www.techlighting.com

DESCRIPTION

Adjustable square lensed shower light with baffle designed for use with IC or Non-IC AIR-TITE™ 3" Halo small aperture line and low voltage housings. Trim is available in six finish styles to match interior decor. Trim uses low voltage MR16 or GU10 line voltage lamps ideal for accent and task lighting. Trim offers 15° tilt and 360° rotation. Wet location listed for use in showers.

Catalog #		Type
Project		
Comments		Date
Prepared by		

DESIGN FEATURES

Cast aluminum trim available in Matte White, Black, Satin Nickel, Antique Copper or Tuscan Bronze finishes with Black Baffle. White trim also available with White Baffle. Lampholder element can be rotated independently of trim. lampholder has 15° tilt. Three pressure springs ensure positive retention in housing.

Trim includes cover glass lens which may be replaced with a variety of media. (Lamps that have integral glass lens do not require use of the cover glass supplied with this trim).

3012 is designed for use with the following H3 housings;

- Line Voltage Housing (for 120V GU10 lamps). For nominal 2 x 6 or larger construction.

H36ICAT	50W	IC Air-Tite Housing
H36TAT	50W	Non-IC Airtite Housing
H36RTAT	50W	Non-IC Air-Tite Remodel Housing

- Low Voltage Housing (for 12V MR16 lamps). For nominal 2 x 6 or larger construction.

H36LVICAT	50W	IC Air-Tite Housing
H36LVTAT	50W	Non-IC Air-Tite Housing
H36LVRTAT	50W	Non-IC Air-Tite Remodel Housing

- Line Voltage Housing (for 120V GU10 lamps). For nominal 2 x 8 or larger construction.

H38ICAT	50W	IC Air-Tite Housing

- Low Voltage Housing (for 12V MR16 lamps). For nominal 2 x 8 or larger construction.

H38LVICAT	37W	IC Air-Tite Housing

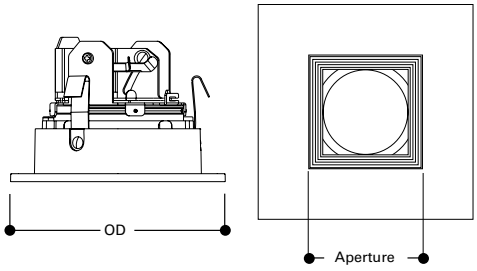

Trim Aperture: 2-1/4" [57mm]
Outside Dimension: 4-1/4" Square[108mm]

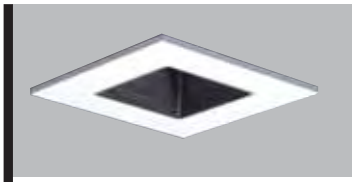

3012WHBB
White with Black Baffle

3012WHWB
White with White Baffle

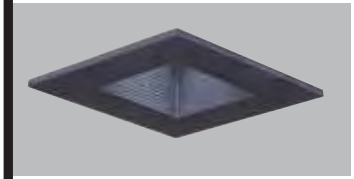

3012BKBB
Black with Black Baffle

3012SNBB
Satin Nickel with Black Baffle

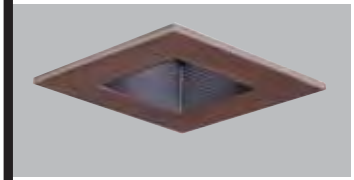

3012ACBB
Antique Copper with Black Baffle

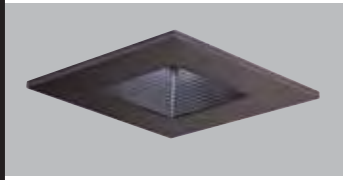

3012TBZBB
Tuscan Bronze with Black Baffle

Trim	Finish
3012	

3012= 3" Adjustable Lensed Showerlight Square Trim

WHBB=White with Black Baffle
WHWB=White with White Baffle
BKBB=Black with Black Baffle
SNBB=Satin Nickel with Black Baffle
ACBB=Antique Copper with Black Baffle
TBZBB=Tuscan Bronze with Black Baffle

3012

3"Lensed Showerlight Adjustable Baffle Square Trim

3" TRIMS

Note: Specifications and Dimensions subject to change without notice.
Visit our web site at www.cooperlighting.com

COOPER Lighting
Customer First Center 1121 Highway 74 South Peachtree City, GA 30269 770.486.4800 FAX 770 486.4801
Cooper Lighting 5925 McLaughlin Rd. Mississauga, Ontario, Canada L5R 1B8 905.507.4000 FAX 905.568.7049

DESCRIPTION

Adjustable square with baffle designed for use with IC or Non-IC AIR-TITE™ 3″ Halo small aperture line and low voltage housings. Trim is available in six finish styles to match interior decor. Trim uses low voltage MR16 or GU10 line voltage lamps ideal for accent and task lighting. Trim offers 15° tilt and 360° rotation.

Catalog #		**Type**
Project		
Comments		**Date**
Prepared by		

DESIGN FEATURES

Cast aluminum trim available in Matte White, Black, Satin Nickel, Antique Copper or Tuscan Bronze finishes with Black Baffle. White trim also available with White Baffle. Three pressure springs ensure positive retention in housing.

Trim includes cover glass lens which may be replaced with a variety of media. (Lamps that have integral glass lens do not require use of the cover glass supplied with this trim).

3011 is designed for use with the following H3 housings;

- Line Voltage Housing (for 120V GU10 lamps). For nominal 2 x 6 or larger construction.

H36ICAT	50W	IC Air-Tite Housing
H36TAT	50W	Non-IC Airtite Housing
H36RTAT	50W	Non-IC Air-Tite Remodel Housing

- Low Voltage Housing (for 12V MR16 lamps). For nominal 2 x 6 or larger construction.

H36LVICAT	50W	IC Air-Tite Housing
H36LVTAT	50W	Non-IC Air-Tite Housing
H36LVRTAT	50W	Non-IC Air-Tite Remodel Housing

- Line Voltage Housing (for 120V GU10 lamps). For nominal 2 x 8 or larger construction.

H38ICAT	50W	IC Air-Tite Housing

- Low Voltage Housing (for 12V MR16 lamps). For nominal 2 x 8 or larger construction.

H38LVICAT	37W	IC Air-Tite Housing

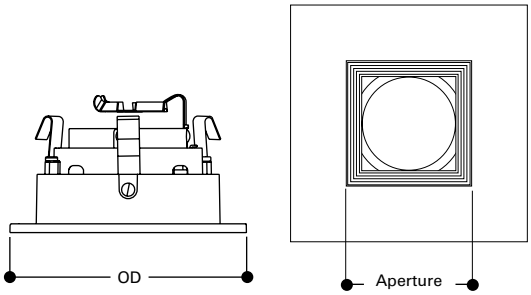

Trim Aperture: 2-1/4" [57mm]
Outside Dimension: 4-1/4" Square[108mm]

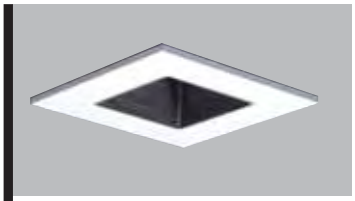

3011WHBB
White with Black Baffle

3011WHWB
White with White Baffle

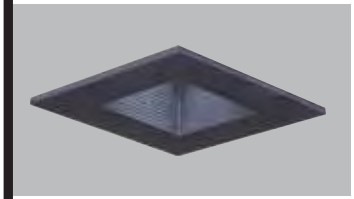

3011BKBB
Black with Black Baffle

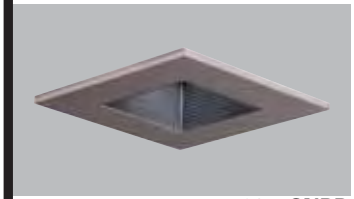

3011SNBB
Satin Nickel with Black Baffle

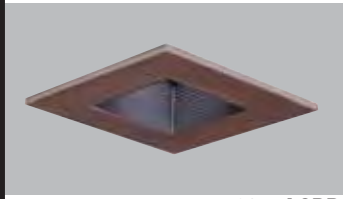

3011ACBB
Antique Copper with Black Baffle

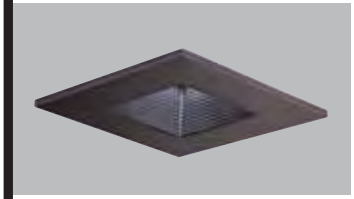

3011TBZBB
Tuscan Bronze with Black Baffle

Trim	Finish
3011	

3011= 3" Adjustable Square Trim

WHBB=White with Black Baffle
WHWB=White with White Baffle
BKBB=Black with Black Baffle
SNBB=Satin Nickel with Black Baffle
ACBB=Antique Copper with Black Baffle
TBZBB=Tuscan Bronze with Black Baffle

3011

3" Adjustable Baffle Square Trim

Note: Specifications and Dimensions subject to change without notice.
Visit our web site at www.cooperlighting.com

COOPER Lighting
Customer First Center 1121 Highway 74 South Peachtree City, GA 30269 770.486.4800 FAX 770 486.4801
Cooper Lighting 5925 McLaughlin Rd. Mississauga, Ontario, Canada L5R 1B8 905.507.4000 FAX 905.568.7049

ADV060268

LinearLux™

FEATURES

- High Performance Light Emitting Diode Fixture to be used in general illumination.
- Linear profile perfect for use as a luminous border in architectural applications.
- Sleek design allows for discrete placement in small areas to be used in accent lighting.
- Choice of four different correlated color temperature white light options: 3200°K, 4400°K, 5500°K and 6700°K.
- Dimmable capabilities allows intensity abatement down to less than five percent with no shift in Correlated Color Temperature.
- Use of High Efficiency White LEDs create no UV radiation making installation ideal in sensitive locations such as museums and shops.
- Unique mounting allows flush fit to surfaces.
- Guaranteed for three years against mechanical defects in manufacturing.

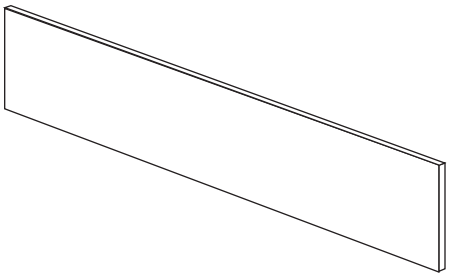

SPECIFICATIONS

Color Temperature Range:	3200°K 4400°K 5500°K 6700°K
Source:	High Efficiency White LED
Beam Angle:	Wide Intensity Distribution
Housing:	Die Cast Aluminum
Lens:	Soft-focus PC
Listings:	UL

ELECTRICAL SPECIFICATION

Input Power:	110/277V; AC 50-60 Hz.
Power Consumption:	53W

ORDERING GUIDE

MODEL NO.		COLOR TEMP.		VOLTAGE		OPTIONS
L2S	–		–		–	___ / ___ / ___
L2S		6700°K 5500°K 4400°K 3200°K		110v 277v		RD = Remote Dimmer

21 Grand Ave. South #623, Palisades Park, New Jersey 07650
tel.: 201.945.6200 / fax: 201.624.7475 / e-mail: info@ledfolio.com / www.LEDfolio.com

LED folio corporation

Summary Data:

CIE Classification	Direct
Lumens/Lamp	2,000
No. of Lamps	1
Luminous Opening	Rectangular
Luminous Width	4" (inches)
Luminous Height	0.5"
Input Watts	53W
RP-1-93 VDT Conformance	Conforming

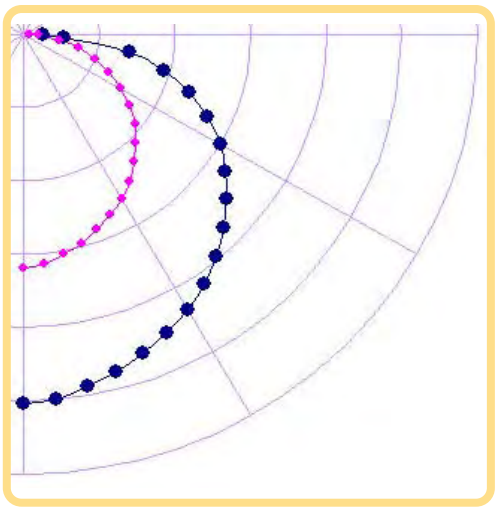

Zonal Lumens

Zone	Lumens	% Luminaire
0-30	398	22
30-60	853	47
60-90	546	31
0-180	2,000	100

Candle Intensity:

Angle	Candelas
0	504
5	500
10	488
15	476
20	463
25	449
30	434
35	416
40	396
45	374
50	351
55	326
60	300
65	268
70	233
75	193
80	143
85	54
90	26

Average Luminance

Angle	Luminance
0	1378
45	1283
55	1280
65	1267
75	1251
85	991

Coefficient of Utilization Table (FCR = 20%)

Pcc..	80				70				50			30			10			0
Pw	70	50	30	10	70	50	30	10	50	30	10	50	30	10	50	30	10	0
RCR																		
0	117	117	117	117	114	114	114	114	109	109	109	104	104	104	100	100	100	98
1	106	101	97	93	103	95	91	88	95	91	88	91	88	85	87	85	83	81
2	96	87	80	75	93	82	77	72	82	77	72	79	74	70	76	72	69	66
3	87	76	68	61	85	72	65	60	72	65	60	69	63	59	66	62	58	55
4	79	67	58	51	77	63	56	50	63	56	50	61	55	50	59	53	49	47
5	73	60	51	44	71	57	49	43	57	49	43	55	48	43	53	47	42	40
6	67	54	45	38	65	51	43	38	51	43	38	49	42	37	48	42	37	35
7	62	48	40	33	60	46	39	33	46	39	33	45	38	33	43	37	32	30
8	58	44	36	30	56	42	35	29	42	35	29	41	34	29	40	34	29	27
9	54	40	32	27	52	39	31	26	39	31	26	38	31	26	37	30	26	24
10	50	37	29	24	49	36	29	24	36	29	24	35	28	24	34	28	24	22

21 Grand Ave. South #623, Palisades Park, New Jersey 07650
tel.: 201.945.6200 / fax: 201.624.7475 / e-mail: info@ledfolio.com / www.LEDfolio.com

LED folio corporation

PDS-70MR 24V

FEATURES

- Economical
- Compact size
- Ease of installation
- Ethernet/DMX ready
- Available with Preprogrammed effects
- Robust 72W power source
- Wet/damp NEMA 4 housing (IP66)
- Choice of intelligent data drivers

DRY

WET & DAMP

LISTED 78GF

ITEM# 109-000018-00 (Preprogrammed)
109-000018-01 (DMX)
109-000018-02 (Ethernet)

BRO135 Rev 02

Specifications subject to change without notice.

Color Kinetics® PDS-70mr 24V provides power and data to Color Kinetics iColor MR g2 lamps, and features Color Kinetics patented Smartjuice® technology. Smartjuice multiplexes incoming power and data onto an outgoing two-wire circuit for use with conventional lighting fixtures such as, tracks, cables, rails, and pendants for simplified new and retrofit installations.

PDS-70mr 24V provides a robust 72W power source and a choice of intelligent data drivers. The available data drivers condition data supplied from Ethernet or DMX512 controllers, including Color Kinetics full line of controllers, to a format compatible with the lamps. PDS-70mr 24V is also available with a preprogrammed effects module. The integration of power and data simplifies wiring installation, and the selection of control configurations expands the versatility of the applications.

PDS-70mr 24V PREPROGRAMMED interface is best suited for installations using simple effects across all light nodes. The preprogrammed shows are: Chasing Rainbow, Fixed Color, Color Wash, Random Fade.

PDS-70mr 24V DMX interface is used for installations using a DMX controller such as iPlayer 2, ColorDial, or a third party DMX controller.

PDS-70mr 24V ETHERNET interface is designed to work with Color Kinetics Light System Manager and is ideal for large installations.

PDS-70mr 24V is housed in a compact NEMA 4 (IP66) enclosure designed for use in wet locations and complies with National Electrical Code (NEC) requirements. Each PDS-70mr 24V features multiple conduit entries sized for 1/2- and 3/4-inch trade sized conduit. The 72W power source features an automatic over-temperature shut-off to protect it from damage due to overheating and the data drive circuitry has been specifically designed with short circuit protection to prevent failures due to incorrect wiring or installation.

PDS-70mr 24V automatically accommodates supply voltages ranging from 100VAC to 240VAC, which must be hard-wired to the power source and is over-current protected. RJ45 data input accepts data from Ethernet or DMX Cat 5 data cables. From a DMX or Preprogrammed power/data supply, the data output connectors allow daisy-chaining DMX data to other DMX supplies.

PDS-70mr 24V SPECIFICATIONS

POWER INPUT	100VAC to 240VAC auto ranging (50Hz–60Hz), 1.7A Power factor correction (PFC)
POWER OUTPUT	24VDC (72W Max.)
HEAT DISSIPATION	25 percent of total power output
AMBIENT OPERATING TEMP	14°F to 104°F (-10°C to 40°C)
HOUSING	NEMA 4 enclosure; housing dimensions: 8.8" (22.4 cm) x 5.5" (14 cm) x 3.6" (9 cm)
CONNECTORS	Data: RJ45 input and output connectors Power: 2-pin output connectors
DATA INPUT INTERFACE	**PDS-70mr PREPROGRAMMED**: No external data input **PDS-70mr DMX**: Color Kinetics DMX controllers or DMX512 compatible **PDS-70mr ETHERNET**: Color Kinetics Light System Manager Ethernet
PROTECTION RATING	IP66
LISTINGS	C-UL US listed, CE listed, Pending

U.S. AND FOREIGN PATENTS AND PATENTS PENDING

COLOR KINETICS INCORPORATED • 10 MILK STREET, SUITE 1100 • BOSTON, MA 02108 • USA
TEL 888 FULL RGB • TEL 617 423 9999 • FAX 617 423 9998 • INFO@COLORKINETICS.COM • WWW.COLORKINETICS.COM

OVERALL DIMENSIONS

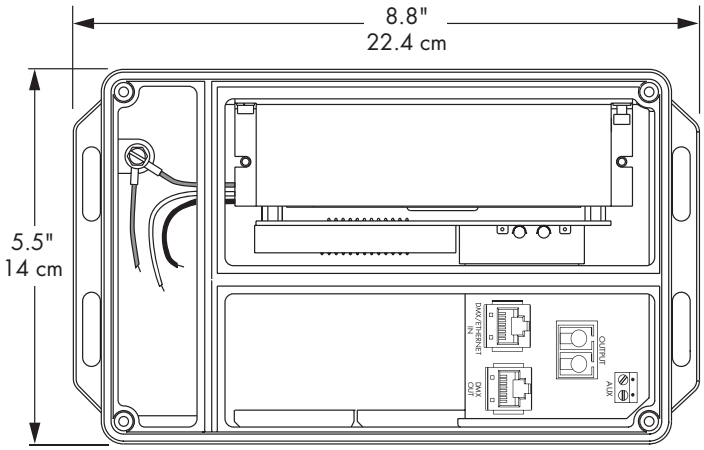

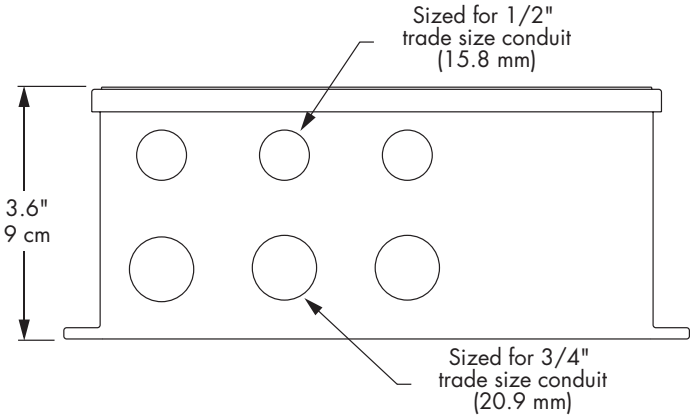

MOUNTING DIMENSIONS

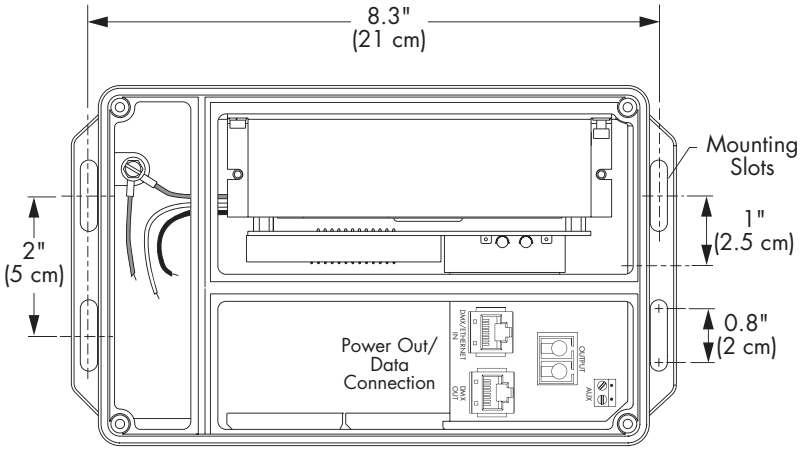

PDS-70mr 24V ITEM# 109-000018-00/01/02	
DATA CONNECTOR	Input and output: RJ45
OUTPUT CONNECTOR	2-pin
SUPPLY CONNECTOR	Flying leads
WEIGHT	4.5 lbs. (2 kg)

DMX

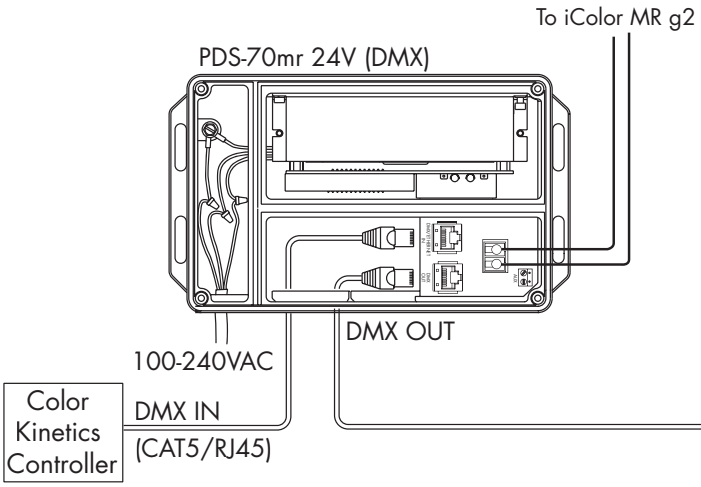

OPTIONAL DAISY CHAIN

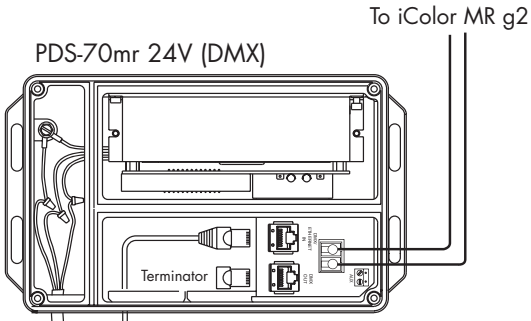

PREPROGRAMMED

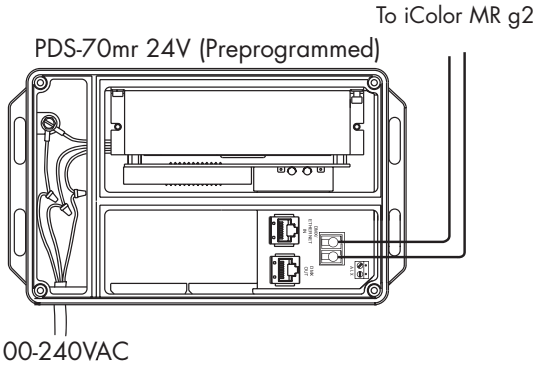

DAISY CHAIN PREPROGRAMMED TO DMX

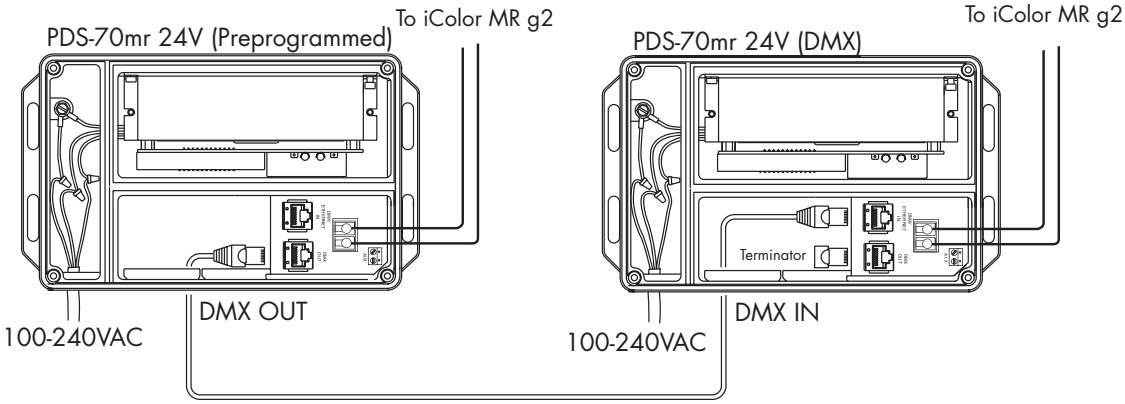

For complete installation instructions and safety precautions, refer to the PDS-70mr 24V User Guide and wiring diagrams located at www.colorkinetics.com/support.

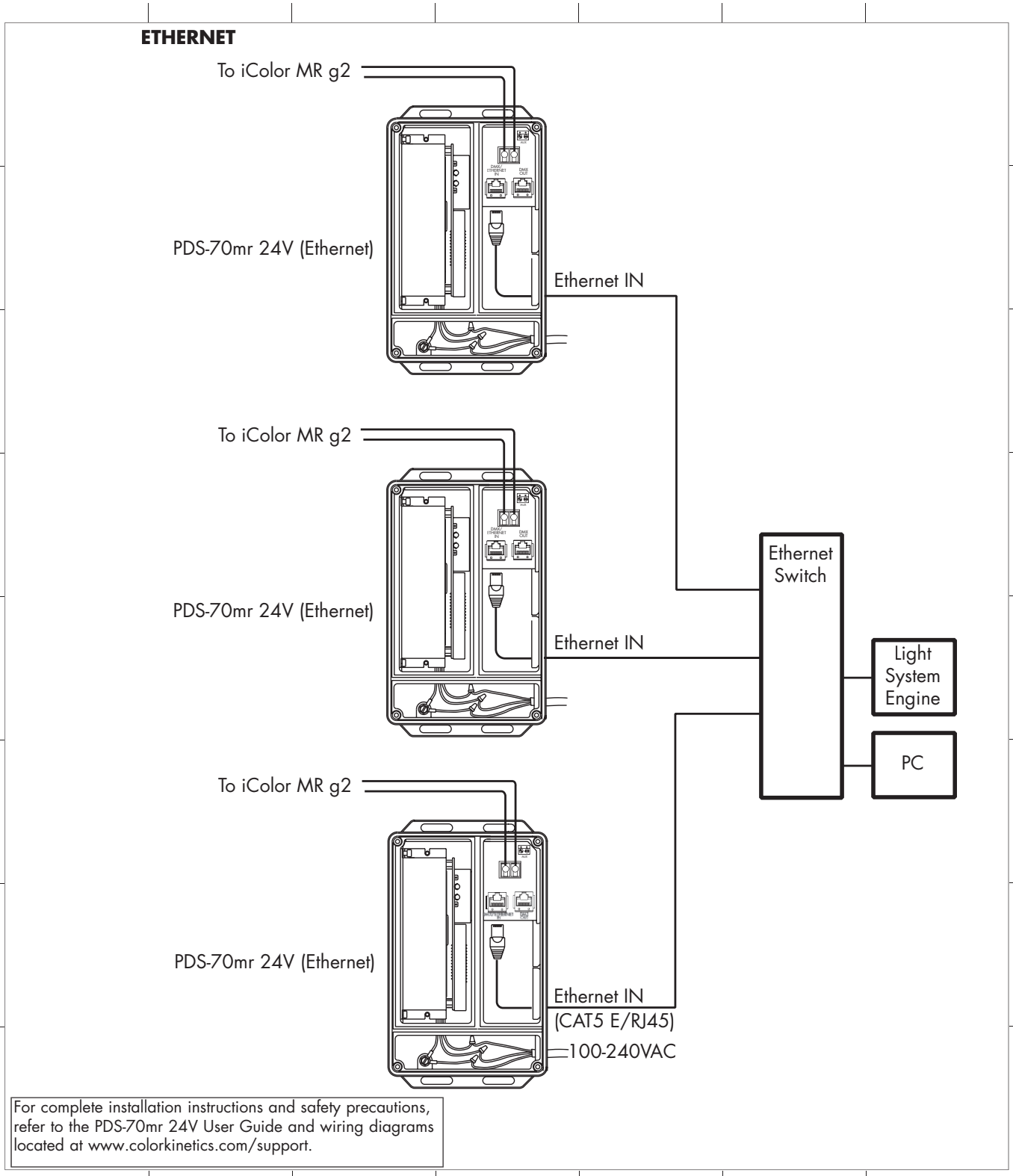

For complete installation instructions and safety precautions, refer to the PDS-70mr 24V User Guide and wiring diagrams located at www.colorkinetics.com/support.

Browse Categories

Recessed Lighting
- 3" Recessed Trims
- 4" Recessed Trims
- 6" Recessed Trims
- Minilights Cabinet Lights
- Downlights

Track Lighting
- Rail Track Lights
- Flexible Track Kits
- Track Lights
- 120V Lumiere

Cable Lighting
- Cable Light Kits
- Hardware
- Fixtures

Ceiling & Pendants
- Chandeliers
- Flush Mounts
- Pendants
- Suspension
- Easy Match

Wall Lights
- Bathroom Wall Lights
- Wall Lights over $100
- Wall Lights under $100

Specialty Lights
- LED Lighting
- Rope Lighting
- Outdoor Lighting

Light Bulbs

Transformers

Information

- Contact Us
- Customer Accounts
- About Us
- Help / FAQ
- Payment & Returns
- Customer Testimonials
- Photo Gallery

store home | search | checkout | shopping cart

Home

ILFW230 - LED Cluster

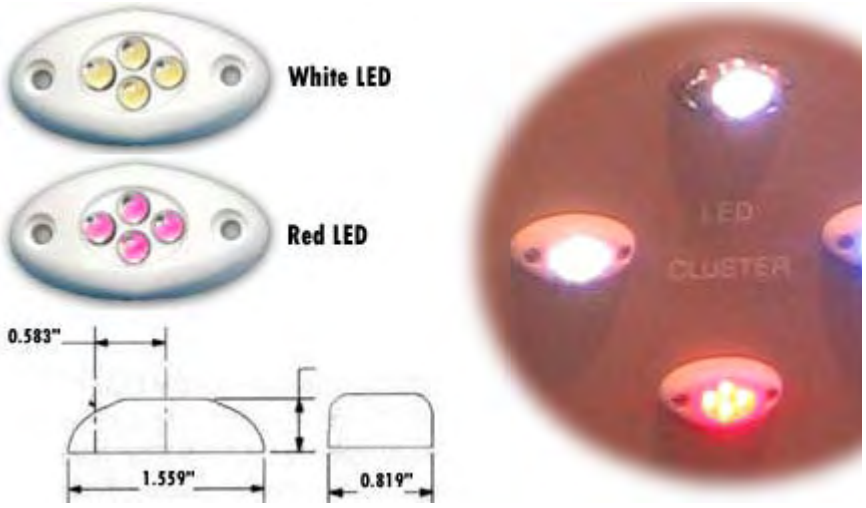

Price: $18.00

Select Model *

- (●) Red LED
- ( ) White LED - Add $5.00
- ( ) White LED Black Housing - Add $5.00
- ( ) White LED Side Entry - Add $5.00
- ( ) Blue LED - Add $7.00

Quantity: 1

add to cart

Usually Ships in 3 to 5 business days.

Available Sizes: 1.56 " X 0.82 "
Available Finishes: White or Black Plastic Casing
Bulb: Built-in LED
Details:

- Interior / Exterior Light

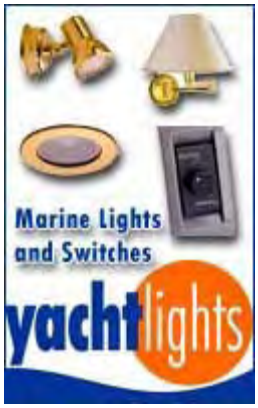

- 12VDC
- LED Colors: White, Blue, or Red
- IP65 Rated Fully Water Resistant
- 0.025 Amp @12V
- Using 1/10th. the energy of comparable incandescent year lighted life.

Customer Review Rating: ★★★☆☆
(201 REVIEWS) View All Reviews Write a Review

RECENT REVIEWS

★★★★☆ **car enthusiast**, february 12 2005
Reviewer: lee
I put these cluster lights on my bmw replacing

Did you find this review helpful? Yes No
3 of 5 people found this review helpful

Click to **email a friend** about this item.

related items

LED-3 - 3W LED Driver
Price: $19.95

LED-25 - 25W
Regularly:
On Sale: $

shopping cart

Your shopping cart is

iCOLOR MR g2

POWERED BY CHROMACORE®

Color Kinetics® iColor® MR g2 is an intelligent, color changing lamp that delivers intense, saturated color and color changing effects. The stylish, silver housing fits into most standard MR16 fixtures, such as tracks, cables, rails, and pendants, and facilitates both new and retrofit installations. High-power LEDs, with a wide 60° beam angle and a narrow 24° beam angle, make iColor MR g2 suitable for a wide-range of applications and environments, including, architectural, theatrical, and retail environments where custom effects and saturated bursts of color are required. iColor MR g2 comes with an interchangeable frosted lens, and an accessory/adapter ring (Item# 101-000050-00) is available for attaching lighting accessories and to ensure a proper fixture fit.

iColor MR g2 receives power and data via Color Kinetics PDS-70mr 24V with Smartjuice® technology. Smartjuice multiplexes incoming power and data onto an outgoing two-wire circuit for use with conventional MR16 fixtures and sockets. Fourteen MR g2 lamps can be powered by one PDS-70mr 24V, which is available with DMX, Ethernet, or preprogrammed data controls, and can be controlled by Color Kinetics full line of controllers, including Color Kinetics Light System Manager, or a third-party DMX controller.

Each iColor MR g2 comes pre-addressed to light number one. Using a DMX controller, simple effects, such as fixed color and color wash, require no additional addressing. Chasing effects across multiple lights, including Chasing Rainbow or Color Sweep, require further addressing using one of the following Color Kinetics addressing tools: Serial Addressing Software (SAS) or Zapi 1.5. For large installations, Light System Manager simplifies installations by discovering and addressing lights in a network.

iCOLOR MR G2 SPECIFICATIONS

COLOR RANGE	16.7 million (24-bit) additive RGB colors; continuously variable intensity output range
SOURCE	High power colored LEDs
BEAM ANGLE	24° narrow angle, 60° wide angle
HOUSING	Painted silver, die cast zinc, 2" (5 cm) diameter
CONNECTORS	Standard MR16 pins
LISTINGS	UL/cUL, CE

ENVIRONMENTAL SPECIFICATIONS

TEMPERATURE RANGE	Ambient: - 4°F to 104°F (- 20°C to 40°C); Surface: 167°F (75°C)
HUMIDITY RANGE	0 to 95% non-condensing humidity

COMMUNICATION SPECIFICATIONS

DATA INTERFACE	Color Kinetics data interface system
CONTROL	Color Kinetics three-channel RGB controllers, including Light System Manager Ethernet protocol, or third-party DMX512

ELECTRICAL SPECIFICATIONS

POWER REQUIREMENT	24VDC
POWER CONSUMPTION	Maximum: 5 Watt
POWER/DATA	Color Kinetics PDS-70mr 24V power/data supply

CHROMACORE® BY COLOR KINETICS

OPTIBIN® BY COLOR KINETICS

SMARTJUICE® BY COLOR KINETICS

DRY

c UL us LISTED
LED LAMP
1XFR

ITEM# 101-000049-02 (Wide Angle)
ITEM# 101-000049-06 (Narrow Angle)

This product is protected by one or more of the following patents: U.S. Patent Nos. 6,016,038, 6,150,774 and other patents listed at http://colorkinetics.com/patents/. Other patents pending.

BRO137 Rev 03

Specifications subject to change without notice. Refer to www.colorkinetics.com for the most recent data sheet versions.

LED SOURCE LIFE

In traditional lamp sources, lifetime is defined as the point at which 50% of the lamps fail. This is also termed Mean Time Between Failure [MTBF]. LEDs are semiconductor devices and have a much longer MTBF than conventional sources. However, MTBF is not the only consideration in determining useful life. Color Kinetics uses the concept of useful light output for rating source lifetimes. Like traditional sources, LED output degrades over time (lumen depreciation) and this is the metric for SSL lifetime.

LED lumen depreciation is affected by numerous environmental conditions such as ambient temperature, humidity, and ventilation. Lumen depreciation is also affected by means of control, thermal management, current levels, and a host of other electrical design considerations. Color Kinetics systems are expertly engineered to optimize LED life when used under normal operating conditions. Lumen depreciation information is based on LED manufacturers' source life data as well as other third party testing. Low temperatures and controlled effects have a beneficial effect on lumen depreciation. Overall system lifetime could vary substantially based on usage and the environment in which the system is installed.

Temperature and effects will affect lifetime. Color Kinetics rates product lifetime using lumen depreciation to 50% of original light output. When the fixture is running at room temperature using a color wash effect, the range of lifetime is in the range of 80,000-100,000 hours. This is LED manufacturers' test data. High output is defined as any LED device that is 1/2 watt or above. For more detailed information on source life, please see www.colorkinetics.com/lifetime.

COLOR KINETICS INCORPORATED • 10 MILK STREET, SUITE 1100 • BOSTON, MA 02108 • USA
TEL 888 FULL RGB • TEL 617 423 9999 • FAX 617 423 9998 • INFO@COLORKINETICS.COM • WWW.COLORKINETICS.COM

iCOLOR MR g2 NARROW ANGLE

PHOTOMETRIC PERFORMANCE

Photometric data is based on test results from an independent testing lab.

SOURCE SPECIFICATIONS

Optics:	Metallized polycarbonate reflectors
Lens:	Tempered clear glass lens
Source:	10 LEDs (4 red, 3 green, 3 blue)
Beam Angle:	24° (at 50% of peak illuminance)
Distribution:	Symmetric direct illumination
CCT:	Adjustable 1,000–10,000K
CRI:	Not measurable (CIE 13.3-1995)

ILLUMINANCE DISTRIBUTION

0.3 / 3.2	1.3 / 14.0	1.4 / 15.1	2.3 / 24.8	1.3 / 14.0	0.3 / 3.2	1.5′/0.5m
1.3 / 14.0	3.2 / 34.4	5.2 / 56.0	5.2 / 56.0	3.2 / 34.4	1.3 / 14.0	
2.3 / 24.8	5.2 / 56.0	9.1 / 98.0	8.1 / 87.2	5.3 / 57.0	2.3 / 24.8	0′/0m
1.4 / 15.1	5.3 / 57.0	8.2 / 88.3	9.1 / 98.0	5.3 / 57.0	1.4 / 15.1	
1.3 / 14.0	3.3 / 35.5	5.4 / 58.1	5.4 / 58.1	3.3 / 35.5	1.3 / 14.0	
0.3 / 3.2	1.3 / 14.0	1.4 / 15.1	2.4 / 25.8	1.3 / 14.0	0.3 / 3.2	1.5′/0.5m
1.5′/0.5m		0′/0m			1.5′/0.5m	

CANDLE POWER DISTRIBUTION

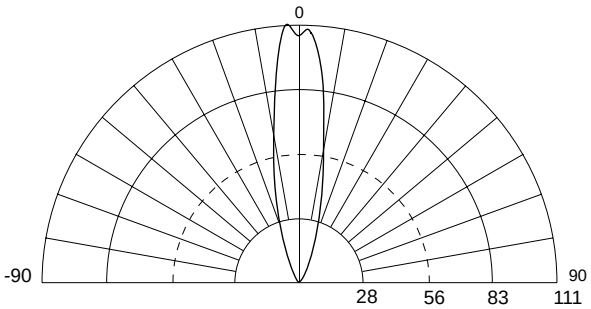

Measured on:	White
Beam center:	111 cd
Multipliers:	0.34 Red, 0.47 Green, 0.21 Blue
Dashed line:	Indicates 50% of peak

ILLUMINANCE DISTRIBUTION PARAMETERS

Units:	Footcandles (top)/Lux (bottom) 10.8 lux = 1 fc
Location:	Bottom of grid, 1′/0.3m from surface, light at perpendicular to surface
Measured on:	All, reflectance model 50%

ILLUMINANCE

DISTANCE	1′ / 0.3m	2′ / 0.6m	3′ / 1.0m	4′ / 1.2m
WHITE	107.0 / 1151.7	26.6 / 286.3	11.8 / 127.0	6.6 / 71.0
RED	36.4 / 391.6	9.0 / 97.3	4.0 / 43.2	2.2 / 24.2
GREEN	49.8 / 585.6	12.4 / 133.1	5.5 / 59.1	3.1 / 33.0
BLUE	22.4 / 240.7	5.6 / 59.8	2.5 / 26.5	1.4 / 14.8

Measured in: Footcandles (top)/Lux (bottom) on axis.
Measured on: All, reflectance 0%

LIGHT OUTPUT

	TOTAL OUTPUT (lumens)	POWER (Watts)	EFFICACY (lm/W)
WHITE	28	4.0	7.0
RED	9.5	1.3	7.3
GREEN	13.0	1.3	10.0
BLUE	5.9	1.3	4.5

iCOLOR MR g2 WIDE ANGLE

PHOTOMETRIC PERFORMANCE

Photometric data is based on test results from an independent testing lab.

SOURCE SPECIFICATIONS

Optics:	Metallized polycarbonate reflectors
Lens:	Tempered clear glass lens
Source:	10 LEDs (4 red, 3 green, 3 blue)
Beam Angle:	60° (at 50% of peak illuminance)
Distribution:	Symmetric direct illumination
CCT:	Adjustable 1,000–10,000K
CRI:	Not measurable (CIE 13.3-1995)

ILLUMINANCE DISTRIBUTION

0.4 / 4.3	0.5 / 5.4	0.7 / 7.5	0.9 / 9.7	0.6 / 6.5	0.4 / 4.3	1.0′/0.3m
0.6 / 6.5	1.0 / 10.8	1.2 / 12.9	1.1 / 11.8	0.9 / 9.7	0.6 / 6.5	
0.9 / 9.7	1.2 / 12.9	1.7 / 18.3	1.6 / 17.2	1.1 / 11.8	0.9 / 9.7	0′/0m
0.7 / 7.5	1.1 / 11.8	1.6 / 17.2	1.7 / 18.3	1.2 / 12.9	0.7 / 7.5	
0.5 / 5.4	0.9 / 9.7	1.1 / 11.8	1.2 / 12.9	1.0 / 10.8	0.5 / 5.4	
0.4 / 4.3	0.5 / 5.4	0.7 / 7.5	0.9 / 9.7	0.6 / 6.5	0.4 / 4.3	1.0′/0.3m
1.0′/0.3m		0′/0m			1.0′/0.3m	

CANDLE POWER DISTRIBUTION

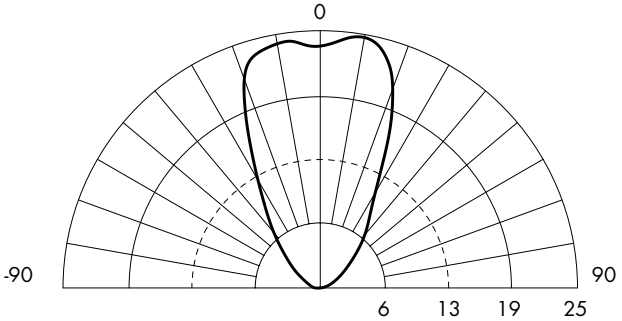

Measured on:	White
Beam center:	25 cd
Multipliers:	0.40 Red, 0.18 Green, 0.42 Blue
Dashed lined:	Indicates 50% of peak

ILLUMINANCE DISTRIBUTION PARAMETERS

Units: Footcandles (top)/Lux (bottom)
Location: 1′/0.3m from, and perpendicular to surface
Multipliers: 0.40 Red, 0.18 Green, 0.42 Blue
Measured on white, reflectance model: 50%

ILLUMINANCE

DISTANCE	1′ / 0.3m	2′ / 0.6m	3′ / 1.0m	4′ / 1.2m
WHITE	40.2 / 432.7	6.8 / 73.2	2.7 / 29.1	1.4 / 15.1
RED	16.1 / 173.1	2.7 / 29.3	1.1 / 11.6	0.6 / 6.0
GREEN	7.2 / 77.9	1.2 / 13.2	0.5 / 5.2	0.3 / 2.7
BLUE	16.9 / 181.7	2.9 / 30.7	1.1 / 12.2	0.6 / 6.3

Measured in Footcandles (top)/Lux (bottom) on axis.
Measured on white, reflectance 0%

LIGHT OUTPUT

	TOTAL OUTPUT (lumens)	POWER (Watts)	EFFICACY (lm/W)
WHITE	29	4.0	7.3
RED	11.6	1.3	9.3
GREEN	5.2	1.3	4.2
BLUE	12.2	1.3	9.7

COLOR KINETICS INCORPORATED • 10 MILK STREET, SUITE 1100 • BOSTON, MA 02108 • USA
TEL 888 FULL RGB • TEL 617 423 9999 • FAX 617 423 9998 • INFO@COLORKINETICS.COM • WWW.COLORKINETICS.COM

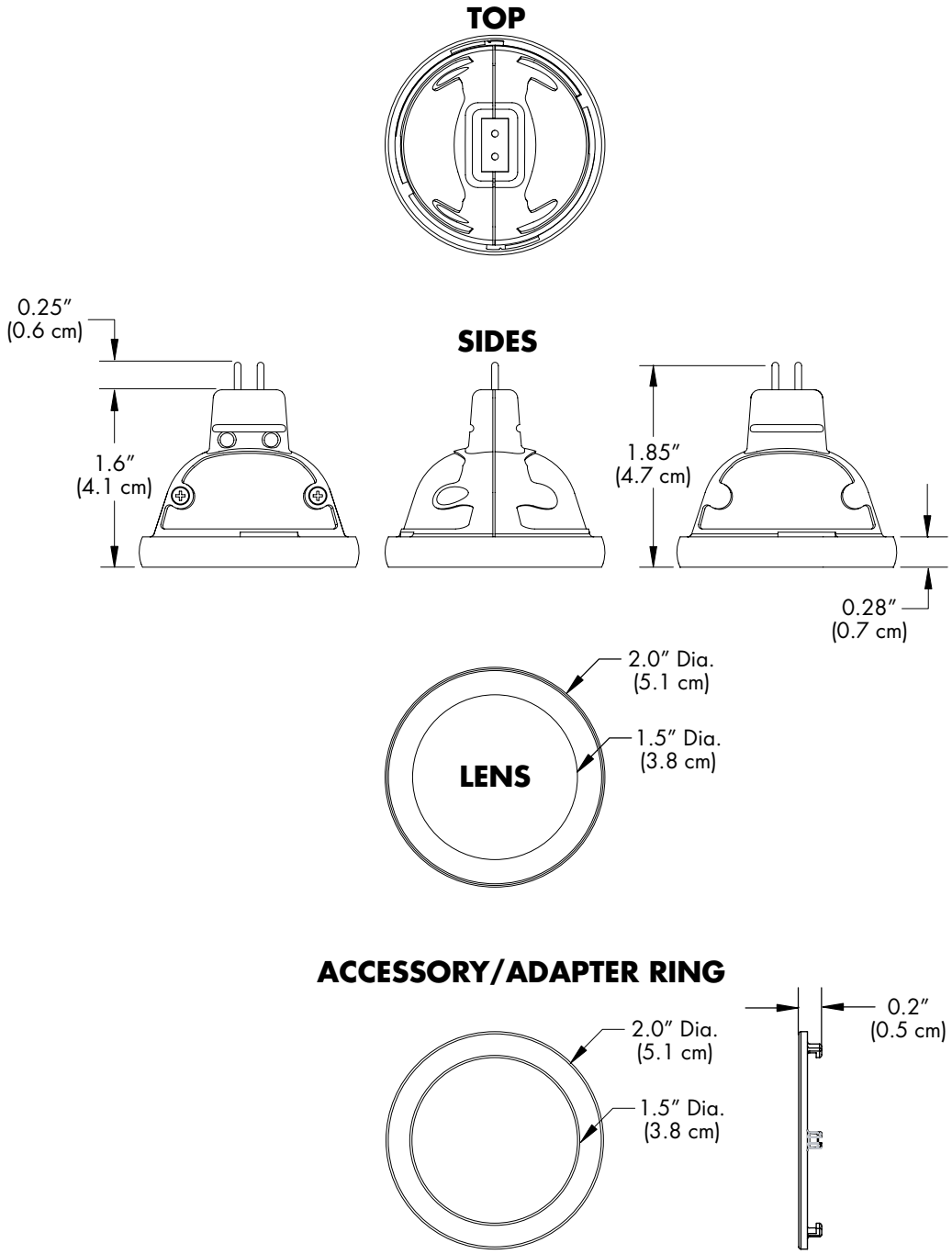

iCOLOR MR g2 ITEM# 101-000049-02/06	
WEIGHT	3.4oz (96g)
POWER CONNECTOR	Standard MR16 fixture
POWER CONSUMPTION	5 Watts

iCOLOR MR g2

FUNCTIONAL FLOW DIAGRAM

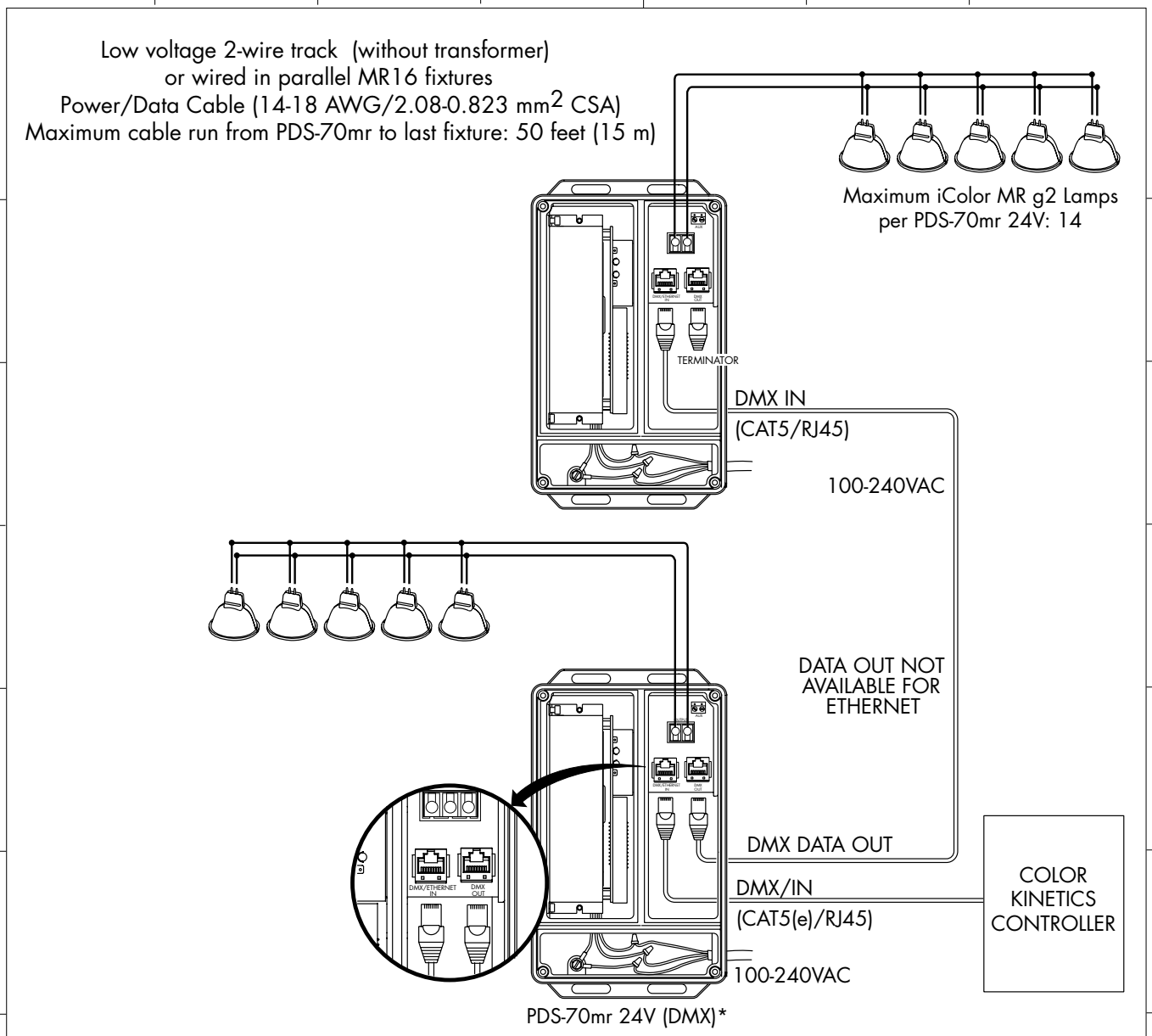

* PDS-70mr 24V is also available for Ethernet or with preprogrammed effects.

For complete installation instructions and safety precautions, refer to the iColor MR g2 User Guide and wiring diagrams located at www.colorkinetics.com/support.

OPTIBIN®

There are inherent variations in the fabrication processes of all semiconductor materials. For LEDs, this variance results in differences in the color and intensity of light output as well as electrical characteristics. Due to these differences, LED manufacturers sort production into "bins," but insuring the availability of a single bin is very difficult. To minimize this issue and achieve optimal color consistency in its products, Color Kinetics has developed and uses a proprietary technology called Optibin. Optibin is an advanced production binning optimization process that minimizes the effects of LED variance for the best possible output uniformity in the final product. Color Kinetics Optibin technology gives you the most consistent control of color and intensity from product to product.

Color Kinetics Incorporated • 10 Milk Street, Suite 1100 • Boston, MA 02108 • USA

Tel 888 FULL RGB • Tel 617 423 9999 • Fax 617 423 9998 • info@colorkinetics.com • www.colorkinetics.com

DESCRIPTION

Westwood 904 and 904-2 are ultra-compact MR16 low voltage halogen fixtures. Model 904 provides downlight or uplight. Model 904-2 provides combination uplight and downlight. Both models mount directly to any wall surface or over a standard 4" J-box and require a remote 12V step-down transformer (not included). Various lenses, louvers and color or dichroic filters can be combined - up to three at once - to create multiple lighting effects. Lumière's exclusive Siphon Protection System (S.P.S.) prevents water from siphoning into the fixture through its own lead wires.

Catalog #		Type
Project		
Comments		Date
Prepared by		

SPECIFICATION FEATURES

A ... Material
Housing and hood are precision-machined from corrosion-resistant 6061-T6 aluminum billet, brass, bronze or stainless steel. Mounting canopy is constructed from corrosion-resistant silicone aluminum, brass, bronze or stainless steel.

B ... Finish Painted
Fixtures constructed from 6061-T6 aluminum are double protected by a chromate conversion undercoating and polyester powdercoat paint finish, surpassing the rigorous demands of the outdoor environment. A variety of standard colors are available. Brass, Bronze or Stainless Steel Fixtures constructed from brass, bronze or stainless steel are left unpainted to reveal the natural beauty of the material. Brass and bronze will patina naturally over time.

C ... Hood
Hood is removable for easy relamping and accepts up to three internal accessories at once (lenses, louvers, filters) to achieve multiple lighting effects. Weep holes prevent water collection on the uplight position.

D ... Gasket
Housing and hood are sealed with a high temperature silicone o-ring gasket to prevent water intrusion.

E ... Lens
Tempered glass lens, factory sealed with high temperature adhesive to prevent water intrusion and breakage due to thermal shock.

F ... Mounting
Both models mount directly to wall surface or over a standard 4" J-box and require remote 12V step-down transformer (not included). Model 904 provides downlight or uplight. Model 904-2 provides non-adjustable uplight and downlight. Lumière's exclusive Siphon Protection System (S.P.S.) prevents water from siphoning into the fixture through its own lead wires.

G ... Hardware
Stainless steel hardware is standard to provide maximum corrosion-resistance.

H ... Socket
Ceramic socket with 250° C Teflon® coated lead wires and GU5.3 bi-pin base.

I ... Electrical
Remote 12V transformer required (not included). Available from Lumière as an accessory - see the Accessories & Technical Data section of this catalog for details.

J ... Lamp
Not included. Available from Lumière as an accessory - see reverse side of this page.

K ... Labels & Approvals
UL and cUL listed, standard wet label. IP65 rated. Manufactured to ISO 9001-2000 Quality Systems Standard. IBEW union made.

L ... Warranty
Lumière warrants its fixtures against defects in materials & workmanship for three (3) years. Auxiliary equipment such as transformers, ballasts and lamps carry the original manufacturer's warranty.

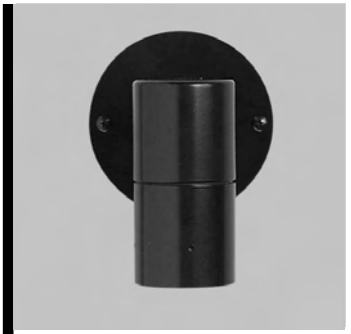

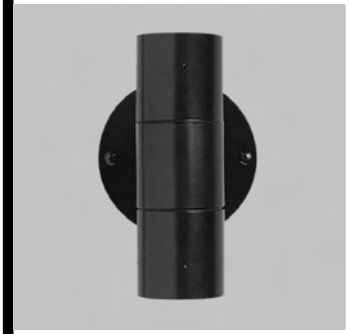

WESTWOOD

904

904-2

50W (max.) MR16
Halogen
Low Voltage

Wall

IP65

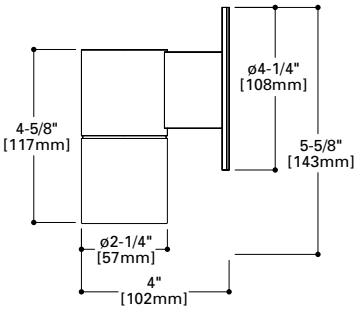

Westwood 904

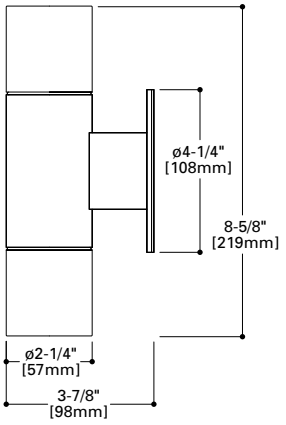

Westwood 904-2

Specifications and Dimensions subject to change without notice.
Consult your representative for additional options and finishes.

Westwood 904/904-2
Lamp=50MR16/NSP
(EXT)
CBCP=11,000

Cone of Light

Distance to Illuminated Plane	Initial Nadir Footcandles	Beam Diameter
15'0"	45	4'0"
10'0"	102	3'0"
8'0"	159	2'0"
6'0"	283	1'6"
4'0"	638	1'0"
2'0"	2550	0'6"

Lamp Wattage Multiplier
20W x 0.32

Westwood 904/904-2
Lamp=50MR16/NFL
(EXZ)
CBCP=3200

Cone of Light

Distance to Illuminated Plane	Initial Nadir Footcandles	Beam Diameter
15'0"	13	10'0"
10'0"	29	6'6"
8'0"	45	5'0"
6'0"	81	4'0"
4'0"	181	2'6"
2'0"	725	1'0"

Westwood 904/904-2
Lamp=50MR16/FL
(EXN)
CBCP=2000

Cone of Light

Distance to Illuminated Plane	Initial Nadir Footcandles	Beam Diameter
15'0"	7	12'0"
10'0"	17	8'0"
8'0"	27	6'6"
6'0"	48	5'0"
4'0"	106	3'0"
2'0"	431	1'6"

Lamp Wattage Multiplier
35W x 0.57
20W x 0.30

Westwood 904/904-2
Lamp=50MR16/WFL
(FNV)
CBCP=1200

Cone of Light

Distance to Illuminated Plane	Initial Nadir Footcandles	Beam Diameter
15'0"	5	17'0"
10'0"	11	11'6"
8'0"	17	9'0"
6'0"	30	7'0"
4'0"	67	4'6"
2'0"	269	2'0"

LAMP INFORMATION

Lamp	ANSI Code	Watts	Beam Spread	CBCP	°K	Life (hrs.)	Base	Volts
50MR16/NSP	EXT	50	12°	11,000	3050	4000	GU5.3 bi-pin	12
50MR16/NFL	EXZ	50	25°	3200	3050	4000	GU5.3 bi-pin	12
50MR16/FL	EXN	50	40°	2000	3050	4000	GU5.3 bi-pin	12
50MR16/WFL	FNV	50	60°	1200	3050	4000	GU5.3 bi-pin	12

NOTE: Inferior quality lamps may adversely affect the performance of this product. Use only name brand lamps from reputable lamp manufacturers.

NOTES AND FORMULAS

- Beam diameter is to 50% of maximum footcandles, rounded to the nearest half-foot.
- Footcandle values are initial. Apply appropriate light loss factors where necessary.
- Bare lamp data shown. Consult lamp manufacturers to obtain detailed specifications for their lamps.

ORDERING INFORMATION

Sample Number: 904-2-50MR16-12-NCP

Series
904: MR16 Up/Down Westwood Wall Fixture

Lamp Head Quantity
__: One Lamp Head
2: Two Lamp Heads

Source
Halogen
50MR16: 50W Max Halogen MR16, GU5.3 Base

Voltage
12: 12V

Finish
Painted
BK: Black
BZ: Bronze
CS: City Silver
VE: Verde
WT: White
Metal
NBR: Brass
NCP: Copper
NSS: Stainless Steel

Accessories
Filters
F71: Peach Dichroic Filter, 2.00" Dia
F72: Amber Dichroic Filter, 2.00" Dia
F73: Green Dichroic Filter, 2.00" Dia
F74: Medium Blue Dichroic Filter, 2.00" Dia
F75: Yellow Dichroic Filter, 2.00" Dia
F76: Red Dichroic Filter, 2.00" Dia
F77: Dark Blue Dichroic Filter, 2.00" Dia
F78: Light Blue Dichroic Filter, 2.00" Dia
F79: Neutral Density Dichroic Filter, 2.00" Dia
F80: Magenta Dichroic Filter, 2.00" Dia
F22: Red Color Filter, 2.00" Dia
F33: Blue Color Filter, 2.00" Dia
F44: Green Color Filter, 2.00" Dia
F55: Yellow Color Filter, 2.00" Dia
F66: Mercury Vapor Color Filter, 2.00" Dia
Optical Lenses
LSL: Linear Spread Lens (elongate standard beam spread), 2.00" Dia
OSL: Overall Spread Lens (increase beam spread), 2.00" Dia
DIF: Diffused Lens (provide even illumination), 2.00" Dia
Optical Louver
LVR: Hex Cell Louver (reduce glare), 2.00" Dia
Lamps
EZX: 20W MR16 GU5.3 Bi-Pin Very Narrow Spot
ESX: 20W MR16 GU5.3 Bi-Pin Narrow Spot
BAB: 20W MR16 GU5.3 Bi-Pin Flood
FRB: 35W MR16 GU5.3 Bi-Pin Narrow Spot
FRA: 35W MR16 GU5.3 Bi-Pin Spot
FMW: 35W MR16 GU5.3 Bi-Pin Flood
EXT: 50W MR16 GU5.3 Bi-Pin Narrow Spot
EXZ: 50W MR16 GU5.3 Bi-Pin Narrow Flood
EXN: 50W MR16 GU5.3 Bi-Pin Flood
FNV: 50W MR16 GU5.3 Bi-Pin Very Wide Flood

Notes:
* Lamp not included.
* 12V remote transformer required - not included.
* See ACCESSORIES & TECHNICAL DATA section of the Lumière catalog for Low Voltage Cable & Transformers.
* Consult your Cooper Lighting representative for additional options and finishes.

GRAFIK Eye®

3000/4000 SERIES

SPECIFICATION GUIDE

SPECIFICATION GUIDE TABLE OF CONTENTS

GRAFIK Eye®

GRAFIK Eye® preset dimming controls increase the functionality, flexibility and beauty of any space, from the simplest residential applications to the most complex commercial applications.

One standard product family handles virtually any job. GRAFIK Eye 3000 Series controls operate via integral dimmers for residential and smaller commercial applications. GRAFIK Eye 4000 Series controls are used with separate Dimming Panels for high performance architectural applications. Both specification grade, GRAFIK Eye 3000 & 4000 Series controls offer consistent, convenient lighting scene recall at the touch of a button.

Lutron offers a choice of GRAFIK Eye Models to control 2 to 64 zones of lighting along with Accessory Controls to expand the system's capabilities for such functions as light sequencing, lockout features and much more. Consult your Lutron representative for the right GRAFIK Eye lighting control solution for your needs.

General Specifications

Fade Times:
Adjustable for each scene from immediate to 60 minutes.

Power Failure Memory:
Lights automatically return to prior levels; scenes and fade times are saved.

Input Power:
50/60 Hz from conventional utility distribution systems or from a generator-based system.

Energy Management / Savings:
GRAFIK Eye lighting controls offer longer bulb life for incandescent sources, energy savings and increased productivity.

Integration:
Interfaces are available for seamless integration with audio/visual, security and other equipment. Visit the Lutron website, www.lutron.com, for detailed application notes.

SOURCES			
			**Incandescent/Tungsten**
	**Neon/Cold-Cathode**		**Electronic Transformer Low Voltage**
	**T-12, T-8, T-5, plus T-4 Compact Fluorescent**		**Magnetic Transformer Low Voltage**

GRAFIK Eye controls work with above sources for intensity changes (either directly or through interfaces) that are smooth and continuous. GRAFIK Eye Dimmers are electronically assigned to the appropriate load types/dimming curve (including non-dim) and can be reassigned at any time. Contact Lutron for information on other lighting sources.

GRAFIK Eye

PRESET LIGHTING CONTROL

GRAFIK Eye controls allow the user to create and recall custom preset scenes for common room activities. Scenes are set by adjusting the lighting zones (a light or group of lights controlled together within a room or space) to create the perfect combination for any activity. Switch between scenes at the touch of a button.

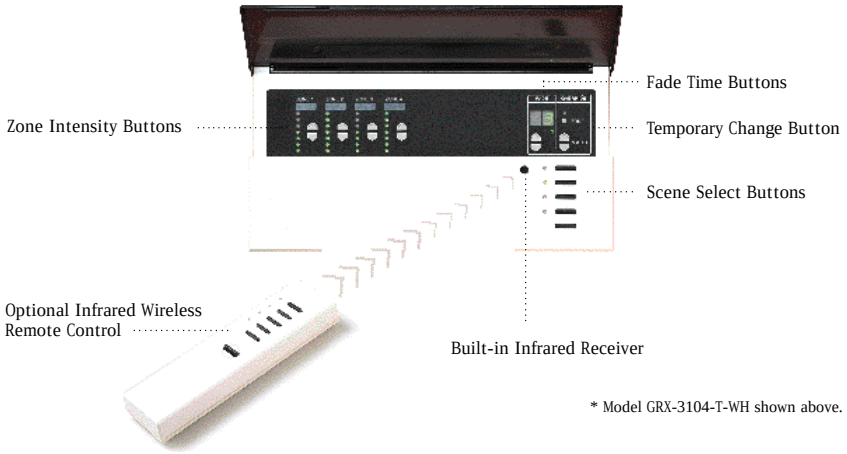

* Model GRX-3104-T-WH shown above.

SCENES	ZONES

1. Set Up

Lights are on for room set up before use. Table, perimeter and accent lighting are all preset at 90 percent for maximum viewing and energy savings. Podium lights are off.

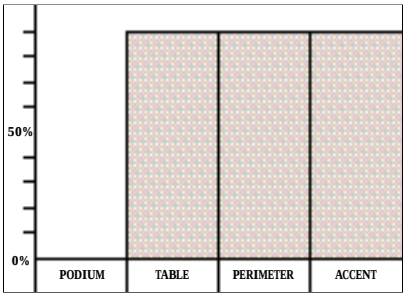

2. General Meeting

Once participants are assembled, this general meeting setting highlights the working area with table lighting at 80 percent and accent lights set at 60 percent while podium and perimeter lights are completely off.

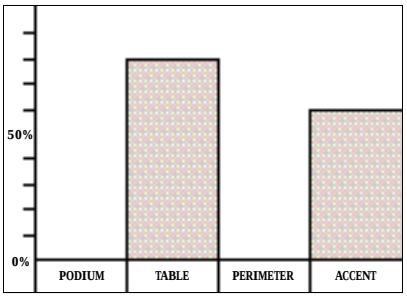

3. A/V Presentation

For A/V presentations, this setting allows the room to be darkened without sacrificing work lighting at the table. Podium lighting is at 80 percent, table lighting is at 60 percent, perimeter lighting is at 20 percent while accent lighting is off to darken the background.

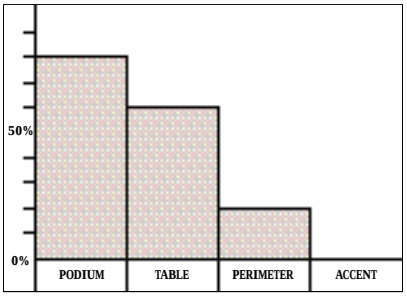

4. Unoccupied/Night light

Lights are set at low levels when room is not in use. Podium, table and accent lights are all off, with perimeter lighting set at 50 percent.

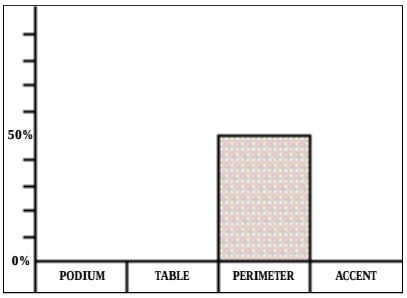

Photo location: Executive Board Room, Manulife Financial, Toronto, Ontario

GRAFIK Eye®	3000 SERIES	MULTI-SCENE PRESET DIMMING CONTROLS

Models 3100 & 3500 for residential and smaller commercial applications have integral power dimmers with line voltage outputs.

3000 Series—Specification Grade
4 Scenes and 2, 3, 4, or 6 Zones, expandable to 16 scenes and 48 zones.

- Can link up to 8 GRAFIK Eye Control Units (8 addresses) for up to 48 zones
- Up to 16 Accessory Controls for total of 24 control points
- Built-in Infrared Receiver/Optional Infrared Wireless Remote Control
- Can increase individual zone capacities to 30,000 W/VA at 120V/277V (For detailed information, see page 13.)

■ Power Interfaces are necessary for Fluorescent (GRX-FDBI) and Electronic Low Voltage (GRX-ELVI). Power Interfaces are not required with HP 2•4•6 Dimming Module. (For detailed Power Interface information, see page 13.)

▲ GRX-TVI– Provides a 0-10V output that conforms to BSI 929. Can be used to switch all lighting loads, including metal halide and electronic ballasts. If switching other non-lighting loads, use a relay by others.

Note: System requires interface at 230V.

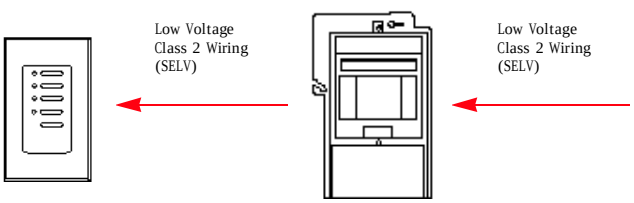

Accessory Controls-
A full line of wallstation controls (up to 16 per system) available to expand system capabilities (For more detailed information, see page 12.) (1)

Interface Accessories-
Provide inputs and outputs for seamless integration with additional equipment (For more detailed information, see page 13.)

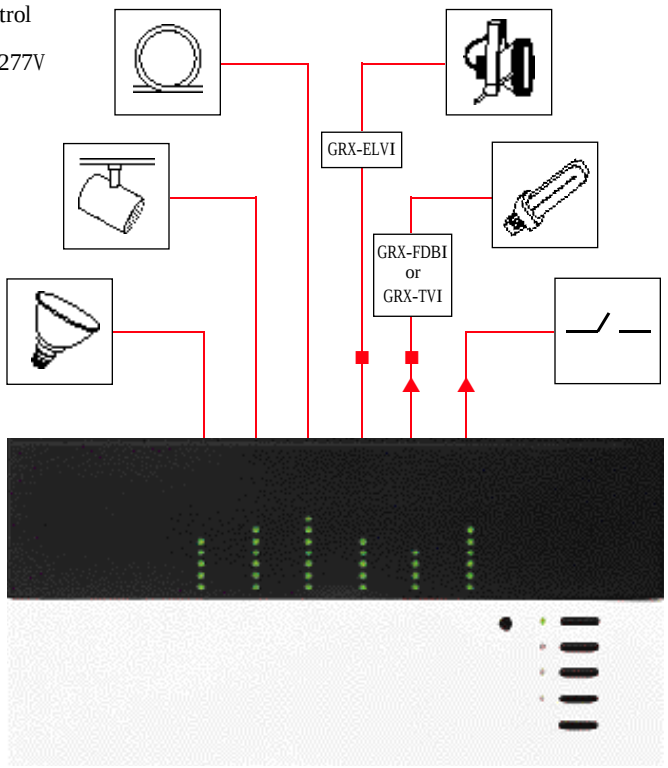

Model shown: GRX-3106-T-WH

Power In Line Voltage

(1) Use of more than 3 Accessory Controls and Low Voltage Interface Accessories per GRAFIK Eye 3000 Series Control Unit requires addition of Part No. GRX-12VDC Class 2 transformer (120V AC: 12 VDC). Consult factory for 220-240V applications.

GRAFIK Eye Models 3100 & 3500 Control Unit Specifications

GRAFIK EYE MODEL NO.	NO. OF ZONES	WALLBOX SIZE*	TOTAL WATTS/VA 120V	100V (-JA)	220-240V (-AU)	230V CE (-CE)
GRX-3102- GRX-3502-	2	2 Gang†† (2) SB-1G	1200	1000	1600	1600†
GRX-3103- GRX-3503-	3	3 Gang†† (3) SB-1G	1500	1250	2400	2300†
GRX-3104- GRX-3504-	4	4 Gang (1) SB-4G	2000	1600	3000	2300
GRX-3106- GRX-3506-	6	4 Gang (1) SB-4G	2000	1600	3000	2300

* Mount in standard multiple gang wallbox, 2.75" deep minimum, 3.5" deep recommended.
* Available from Lutron as Part No. listed.
† (1) No. SB-4G required.
†† CE requires SB-4G (4 gang) wallbox.

Note: To build a complete Model No., see page 18.

Global Product Offerings

Volts	Zone Capacity
120V	6.7A/800WA
100V	6.0A/600W/VA
220-240V	5.0A/1200W/VA
230V	3.4A/800W/VA

Note: GRAFIK Eye Control Units have both a maximum capacity limit per zone and a maximum capacity limit per unit. Each **zone** cannot exceed the total Watts/VA in the chart at left, and each **unit** cannot exceed the total Watts/VA outlined in the chart on page 4. However, the maximum unit capacity can be allocated among each individual zone in the unit. For example, on a 3-zone unit at 120V with a maximum zone capacity of 800W and a maximum unit capacity of 1500W, some zones will not reach the individual zone maximum because the total unit maximum cannot exceed 1500W. Check total unit maximums before ordering Model Nos.

SYSTEM WIRING

Diagram at right illustrates basic system wiring for GRAFIK Eye 3000 Series Control Units.

Note: For wiring multiple Control Units, Interfaces, and Accessory Controls, system wiring should be: Low Voltage Class 2 (SELV) 4-wire daisy chain of two No. 18 (1.0mm²) twisted pairs (4 wires); two Belden 9740, or one Liberty LU02PSH18EX-GRN. For complete system wiring information, see 3000 Series Installer's Guide, P/N 032-042.

For CE Wiring, consult factory.

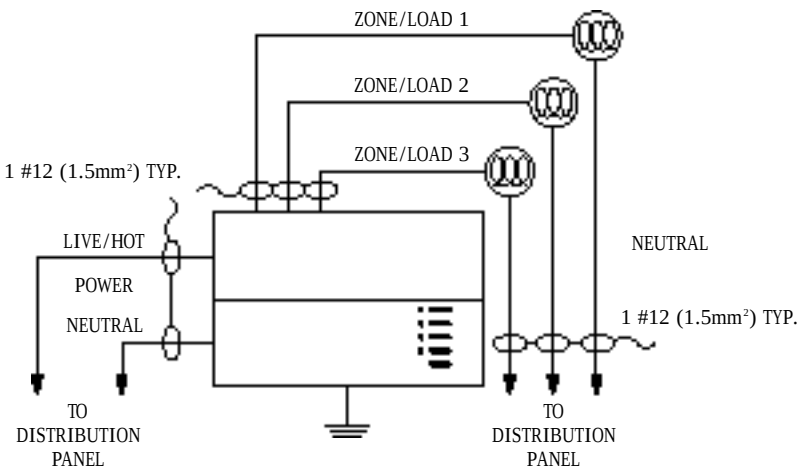

POWER BOOSTER AND INTERFACE WIRING

For GRAFIK Eye 3000 Series controls only, Lutron Power Boosters can be added to increase zone capacities. Consult factory for other load types (e.g. HID). (For 120V, Power Interfaces are not required with HP 2·4·6 Dimming Module.)

For other Interface Wiring information, consult installation information shipped with product.

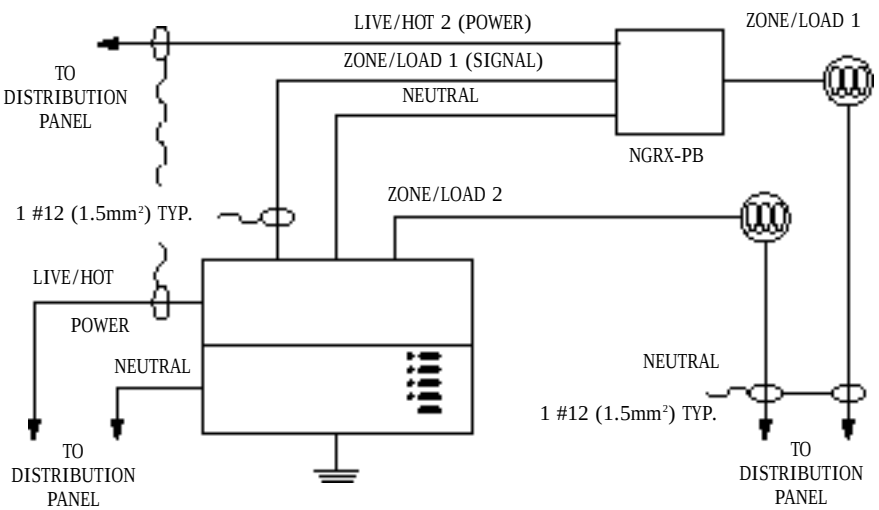

Use of more than 3 Accessory Controls and Low Voltage Interface Accessories per GRAFIK Eye 3000 Series Control Unit requires addition of Part No. GRX-12VDC Class 2 transformer (120V AC: 12 VDC). Consult factory for 220-240V applications.

Class 2 (SELV) Low Voltage Accessory Controls (for GRAFIK Eye 3000 and 4000 Series)

	DESCRIPTION	FUNCTIONS	REF. P/N†
	**GRX-IT, GRX-8IT** Handheld Infrared Wireless Remote Control Transmitters	Controls 4 (or 8) scenes plus master raise/lower and off. Recalls scenes or fine tunes light levels. Turns lighting on or off. **Note: Not included in 16 accessory maximum.**	362-592
	**NTGRX-2B-SL** Two-Button Entrance Control	Turns lighting (scene 1) on or off. Selects 2 scenes (either 1/off, 9/10 or 13/14), partition opened/closed, panic station, sequencing, raise/lower.	362-933, 362-593
	**NTGRX-4S, NTGRX-4B** Scene Selection Control Four-Button Control	Activates scenes 1-4; master raise/lower and off. Recalls or fine tunes light levels. Activates scenes 1-4, 5-8, 9-12, or 13-16; operates one or more GRAFIK Eye units.	362-596 362-934
	**GRX-4S-DW** Architrave™ Door Jamb Control	Activates scenes 1-4; master raise/lower and off. Recalls or fine tunes light levels. Ideal for door jambs. Operates one or more GRAFIK Eye units.	362-597
	**NTGRX-4M** Master Control	Activates scene 1 or off for up to eight GRAFIK Eye units, and all on or all off.	362-598
	**NTGRX-4PS** Partition Control	Provides 4 buttons to operate selected GRAFIK Eye units independently, or in combination to reflect partition status.	362-599
	**NTGRX-4S-IR** Infrared Receiver/Scene Selection Control	Activates scenes 1-4 and off by touch-buttons or infrared transmitters (above). Recalls or fine tunes light levels. Activates scenes 1-4, 5-8, 9-12, or 13-16; operates one or more GRAFIK Eye units.	362-602
	**NTGRX-SI4S-IR** Infrared Receiver/Scene Control/Switch Interface	Provides access to scenes 1-4 or 5-8 based on external contact closure (example: to control partitioned spaces).	362-782

† GRAFIK Eye Specification Submittal Sheets are available for downloading/printing on Lutron's website, www.lutron.com.

Low Voltage Interface Accessories (for GRAFIK Eye 3000 and 4000 Series)

	DESCRIPTION	FUNCTION	REF. P/N
	**GRX-AV** Contact Closure Interface	Two-way interface between GRAFIK Eye controls and contact-closure devices (A/V systems, timeclocks, security systems, occupant sensors, etc.).	362-600
	GRX-RS232 RS232 Interface	Integrates GRAFIK Eye controls with user-supplied PC or digital A/V equipment.	362-756
	GRX-ATC RS232/Timeclock Interface	Integrates GRAFIK Eye controls with user-supplied PC or digital A/V equipment. Features built-in astronomic timeclock—4 schedules/60 events per schedule.	362-812
	GRX-PRG 3500/4500 Programmer Interface	For use with GRX-3500/4500. Integrates GRAFIK Eye controls with user-supplied PC or digital A/V equipment. Features built-in astronomic timeclock (same as above). Provides access to advanced user-programmable features.	366-579
	**GRX-CIR** Ceiling Mounted Infrared Receiver	Provides remote infrared wireless control to GRAFIK Eye units. Functions with handheld transmitters. Activates scenes 1-4, 5-8, 9-12, or 13-16 via handheld transmitter. Operates one or more GRAFIK Eye units.	362-601

Line/Mains Voltage Power Boosters and Interface Accessories (for GRAFIK Eye 3000 Series only)

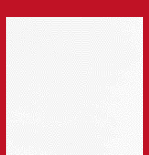	**NGRX-PB** Power Booster	Increases single zone load capacity for incandescent, magnetic low voltage, neon/cold-cathode sources. 1920W per zone @120V; 2400W @240V; 1200W flush mount (with face plate), 1840W surface mount (without face plate) @ 240V for CE.	362-603
	GRX-FDBI Fluorescent Power Interface	Single zone interface to dim or switch Lutron electronic dimming ballasts. 16A per zone @ 120V, 10A @ 240V.	362-622
	GRX-ELVI Electronic Low Voltage Power Interface	Single zone interface to dim electronic transformer supplied low voltage lighting. 1000W @ 120V, 1200W @ 240V, 1000W @ 230V for CE.	362-635
	**GRX-TVI** Phase Control to 0-10V Ballast Interface	Provides 0-10V control (BSI 929) and ballast switching capabilities in one; allows 120V fluorescent controls the ability to control 0-10V ballasts that reside in an industrial power grid (for example, 277V); provides switching relays that can handle the in-rush current of a circuit of ballasts.	366-551
	**HP 2•4•6** Dimming Module	Increases single zone load capacity to 2000 W/VA (HP-2), 4000 W/VA (HP), 6000 w/VA (HP-6), all @120V. For incandescent, magnetic and electronic low voltage, neon and fluorescent sources. Up to 5 modules can be daisy chained for greater capacity (30,000 W/VA @120V, also 240A @277V for fluorescent). **Note: Not for 100, 220-240V.**	362-604

Other Accessories

	**NTGRX-1S** On/Off Doorway Control	Line/main voltage control. Switches lighting (scene 1) on or off from a remote wall location. (Functions as three-way switch.)	360-178

Note: Also available: A Lockable Cover which prevents tampering with GRAFIK Eye controls and accessories and permits infrared operation—translucent black—Model No. GRX-___-GLC (Insert 1, 2, 3, or 4 in Model No. for wallbox gang size); and Matching Receptacles, 15A and 20A 120V conventional and GFCI, with matching telephone and cable TV jacks.

Control Unit

For specific Model No. in series, place a 1 or 5 in the blank space, i.e. GRX-3**1**02.

MODEL NO.	A	B
GRX-3_ 02† GRX-4_ 02†	4-15/16” (123mm)	1-13/16” (46mm)
GRX-3_ 03† GRX-4_ 03†	6-11/16” (168mm)	3-5/8” (92mm)
GRX-3_ 04 GRX-4_ 04 GRX-3_ 06 GRX-4_ 06 GRX-4_ 08 GRX-4_ 16 GRX-4_ 24	8-5/16” (208mm)	5-7/16” (138mm)

Main Control Unit (GRX-3000, GRX-4000)
Mount in standard 2-, 3- or 4-gang wallbox (3.5” deep, 89 mm).

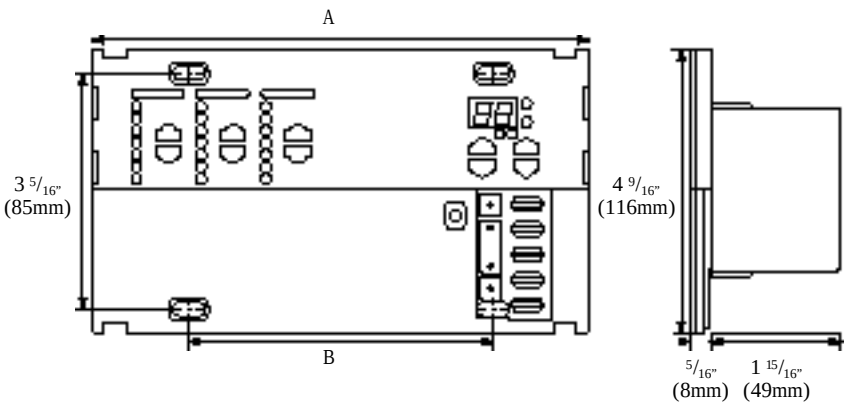

† For CE requirements, Control Unit dimensions are 8 5/16” (208 mm) x 5 7/16” (138 mm) and must mount in standard 4-gang wallbox.

Accessories

FIG.	MODEL NO.	A	B	C	D
1	NTGRX-1S NTGRX-2B-SL	2-3/4” (70mm)	4-9/16” (116mm)	5/16” (8mm)	1-3/8” (35mm)
	NTGRX-4S, 4B, 4SIR	2-3/4” (70mm)	4-9/16” (116mm)	5/16” (8mm)	13/16” (21mm)
	NTGRX-4M	2-3/4” (70mm)	4-9/16” (116mm)	5/16” (8mm)	13/16” (21mm)
	NTGRX-4PS	2-3/4” (70mm)	4-9/16” (116mm)	5/16” (8mm)	13/16” (21mm)
2	GRX-AV GRX-RS232 GRX-ATC GRX-PRG	5” (127mm)	7-3/4” (197mm)	2-1/2” (64mm)	—
3	GRX-4S-DW	1-3/4” (44mm)	4-1/2” (114mm)	1/4” (6mm)	1-3/8” (35mm)
4	NGRX-PB GRX-FDBI/ELVI	4-1/2” (114mm)	4-9/16” (116mm)	11/16” (17mm)	1-7/8” (48mm)

FIG. 1

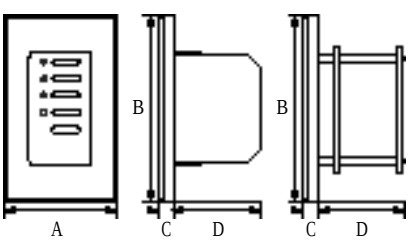

Wallbox Control Panels (NTGRX-1S, -2B-SL, -4S, -4B, -4SIR, -4M, and -4PS)
Mount in single-gang wallbox. (1) See mounting notes below.

FIG. 2

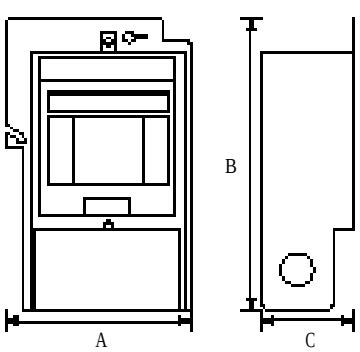

Interface Control (GRX-AV, -ATC, -PRG, -RS232)
Mounts on 4” -square utility box. (3)

Mounting Notes: (1) Mounts in standard single-gang wallbox 2.75" deep minimum, 3.5" deep recommended (Lutron Part No. SB-1G). (2) Lutron supplies backbox (Part No. 241-399). (3) Mounts on standard 4"x4" junction box (Lutron Part No. 241-496). (4) Mounts in standard two-gang wallbox; 2.75" deep minimum, 3.5" deep recommended. (Two each Lutron Part No. SB-1G).

Accessories (continued)

FIG. 3

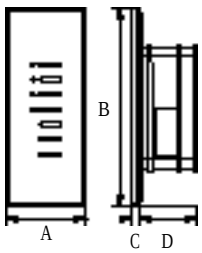

Architrave Door Jamb Control (GRX-4S-DW)
Mounts directly in door jamb. (2)

FIG. 4

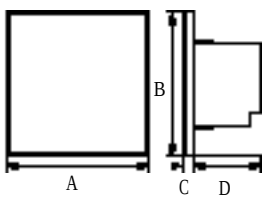

Power Booster (NGRX-PB),Fluorescent Interface (GRX-FDBI), Electronic Low Voltage Interface (GRX-ELVI), Mount in two-gang wallbox. (4)

XP Switching/LP Dimming Panels

FIG. 1

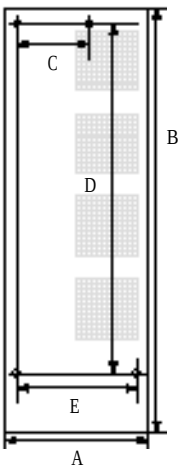

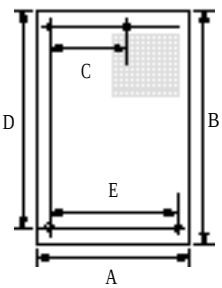

XP Panel (24, 32 and 48 switching circuits)
Wall-mounted: allow 12” (305 mm) clearance above and below panel. Reference publication P/N 362-849.

LP Panel (16-32 switching legs)
Wall-mounted: allow 12” (305 mm) clearance above and below panel. Reference publication P/N 366-552.

FIG. 2

Mini XP Panel (4, 8, 12, and 16 switching circuits)
Wall-mounted; allow 12” (305 mm) clearance above and below panel. Reference publication P/N 366-529.

Mini LP Panel (4, 8, and 12 switching legs)
Wall-mounted: allow 12” (305 mm) clearance above and below panel. Reference publication P/N 366-530.

FIG.	MODEL NO.	A	B	C	D	E	DEPTH
1	XP, LP	14.375” (37cm)	59” (150cm)	8” (20cm)	41.75” (106cm)	11” (28cm)	4” (10cm)
2	Mini XP, Mini LP	14.375” (37cm)	26” (66cm)	8” (20cm)	21.5” (55cm)	10.75” (28cm)	4” (10cm)

Dimming Panels

FIG. 1

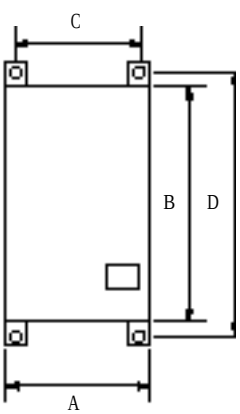

Mini Panel, GP3 and GP4 (3 and 4 circuits)
Wall-mounted: allow 12” (305 mm) clearance above and below panel. Reference publication P/N 362-643.

FIG. 2

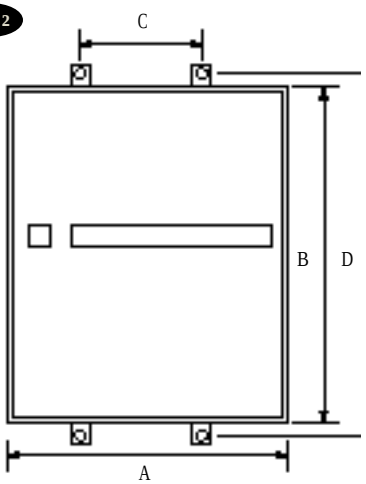

GP8, GP12, GP16, GP20, and GP24 Panels (8, 12, 16, 20 and 24 circuits)
Wall-mounted: allow 12” (305 mm) clearance above and below panel. Reference publication P/N 362-605.

FIG. 3

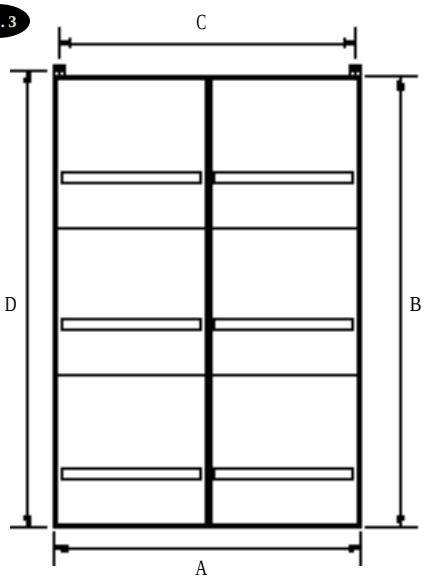

GP72 Panel
Handles up to 3 feeds. Floor-standing: allow 12” (305 mm) clearance above panel. Reference publication P/N 362-788.

FIG.	MODEL NO.	A	B	C	D	DEPTH
1	GP3,GP4	11” (28cm)	18” (46cm)	9.625” (25cm)	19.5” (50cm)	6.25” (16cm)
2	GP8,12,16, 20 and 24	27.6” (70cm)	32.9” (84cm)	11.9” (30cm)	35” (89cm)	12” (31cm)
3	GP72	52.3” (133cm)	86” (218cm)	50” (127cm)	87” (220cm)	14” (36cm)

LUTRON Quality Systems Registered to ISO 9001

Safety standards listed above apply to one or more products in the GRAFIK Eye product line. Consult factory for specific information.

General Specifications

- The entire lighting control system shall be U.L., CSA or CE marked as appropriate. Manufacturer shall maintain ISO 9001 certification. Dimming system shall be covered by a minimum one-year warranty from time of purchase.
- Manufacturer shall be capable of providing on-site service support within 24 hours anywhere in the continental U.S.A., and within five business days anywhere in the world, except where special visas are required.
- Premium Temperature Margins: Panels operate at a minimum of 20 degrees Celsius below the power conducting component temperature rating. Electronic components live twice as long for every 10 degrees Celsius below the rating at which they operate both increasing semiconductor reliability and ensuring the system's design life span.

Accessories

- Four-Scene Control(s) shall be capable of recalling any one of four scenes, master raise/lower and off. Control shall provide access for up to 16 scenes.
- Wireless Infrared Transmitter(s) shall be capable of recalling any one of four preset scenes and off. In addition, a master raise/lower shall be provided. The transmitter shall be manufactured by the dimming system manufacturer. The range of the transmitter to any single receiver shall be at least 50 feet.
- System should employ common architecture for products, accessories and user interfaces.

Control Unit

Preset dimming control shall incorporate an airgap switch relay which shall be accessible without removing the faceplate.

- Preset dimming control shall meet ANSI/IEEE Std. C62.41©1980, tested to withstand voltage surges of up to 6000V and current surges of up to 200A without damage.
- Preset dimming control shall provide power failure memory.
- Faceplate shall attach using no visible means of attachment.
- Controls shall incorporate built-in wide angle Infrared Receiver, providing control via a separate Wireless Remote Control Transmitter from up to 50 feet away.
- Programming of preset scenes shall be accomplished without the use of an ENTER or STORE button.

Ballasts

- Ballasts shall withstand 4000 volt surges as specified in ANSI C62.41.
- Ballasts shall preheat lamp cathodes before applying arc voltage to ensure rated lamp life is not diminished.
- Ballasts shall internally limit in-rush current to not exceed three amps at 277 volts or seven amps at 120 volts to avoid computer problems, nuisance circuit breaker trips, and control contact malfunctions.

Installation

- Wiring from preset dimming control to Dimming Panel and Accessory Controls shall be Low Voltage Class 2 Wiring (SELV).

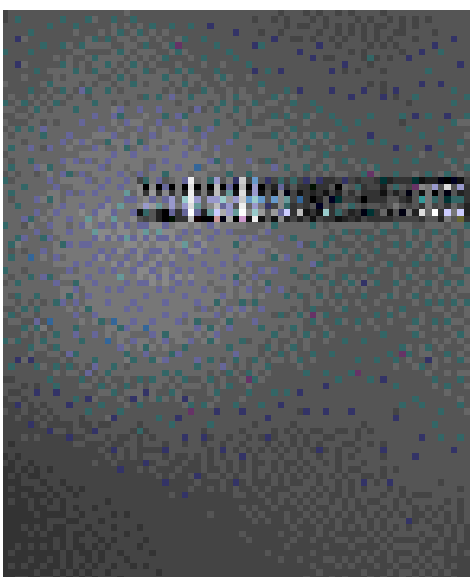

XP Switching Panel

- Relays shall be rated for 16 Amps, continuous duty, for the following load types: Incandescent/Tungsten, Electronic and Magnetic Low Voltage, Neon/Cold-Cathode, high intensity discharge, high in-rush Electronic and Magnetic Fluorescent lamp ballasts.
- Load shall be switched in a manner that ensures no arcing will occur at the mechanical contacts when power is applied to the load circuit.

Dimming Panels: LP/GP

- Panels shall be completely prewired by the manufacturer. The contractor shall be required to provide input feed wiring, load wiring, and control wiring.
- Panels shall be cooled via free-convection, unaided by fans, and capable of continuous operation to all of these section specifications within an ambient temperature range of 0°C (32°F) to 40°C (104°F). Panel shall provide capability to electronically assign each circuit to any zone in the dimming system. Panels using mechanical switches, rewiring, or EPROMS shall not be acceptable.
- One type of Dimming Module/Card shall be used for all sources. Systems requiring different types of modules or modular dimming cards shall not be acceptable.
- A positive air gap relay shall be employed with each dimmer to ensure that the load circuits are open when the “off” function is selected at a control station.
- Dimmers shall operate the following sources/load types with a smooth continuous Square Law dimming curve: Incandescent, Tungsten and Magnetic Low Voltage Transformer, Electronic Low Voltage Transformer, Fluorescent Electronic Dimming Ballasts (Ballasts for Fluorescent fixtures must be Lutron Hi-lume “FDB” or “Eco-10” series), Neon and Cold-Cathode.
- Dimmers shall also be capable of operating sources on a non-dim basis. Dimmers shall be electronically assigned to the appropriate load type/dimming curve and can be reassigned at any time. Universal-type dimmers that do not adjust the dimming curve shall not be acceptable.

GRAFIK Eye Accessories and Control Units are available in a variety of colors and finishes. Custom paint matching and personalized engraving of Accessories and Control Units also are available. Consult your Lutron representative to find the right custom solution for your needs.

Engraving is available in the following typestyles:

HELVETICA BOLD
ROMAN BLOCK
GOTHIC

Engraving is available in the following colors:

White, Beige, Black, Brown, Gray

Controls are available in the following colors:

Control Unit

Cover—Opaque to match base color (A) or translucent black (T).

Base—White (WH), beige (BE), ivory (IV), brown (BR), black (BL), gray (GR), bright brass (BB), bright chrome (BC), satin brass (SB).

Accessories

Accessory Controls, receptacles and jacks are available in white (WH), beige (BE), ivory (IV), brown (BR), black (BL), and gray (GR).

Architrave™ Controls are available in bright brass (BB), and white (WH).

Handheld transmitters and ceiling receivers are available in white (WH).

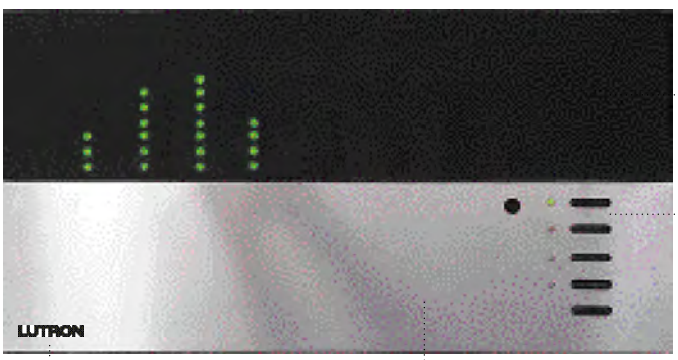

Choice of translucent or opaque cover.

Engrave scene name beneath each button, i.e. Room Setup, General Meeting, A/V Presentation, etc.

Your company name or logo here.

Choice of six distinct colors and three metallic/metal finishes.

* Example: Model GRX-3104-T-BC shown above.

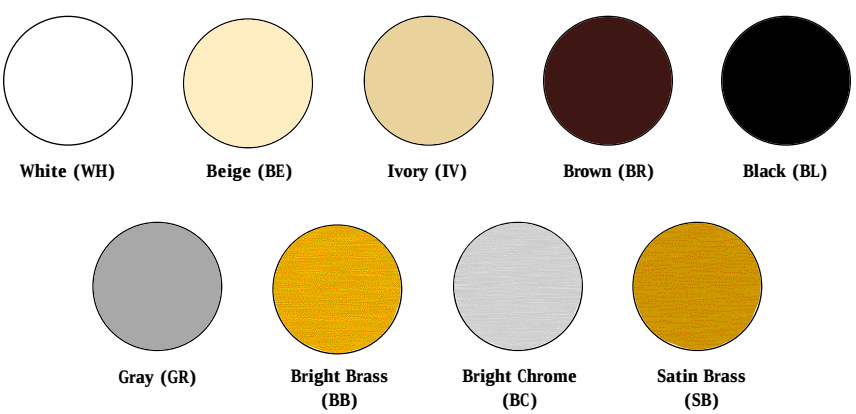

Global Product Offerings:

Add suffix to all Model Nos. when ordering for global power requirements:

Volts	Model Suffix
120V	(none)
100V	–JA
220-240V	–AU
230V	–CE

Ordering Information:

Follow the examples below when creating Model Nos. to order product:

- To order a four-zone Control Unit with a bright brass (BB) base and a translucent (T) cover in 120V, the model number would be GRX-3104-T-BB.
- To order a six-zone Control Unit with a white cover (A) to match a white (WH) base in 230V, the model number would be GRX-3106-A-WH-CE.

Consult your Lutron representative for more details about custom finishes and engraving or call the Lutron Hotline at 1.800.523.9466.

Lutron is the World's Leading Manufacturer of Lighting Controls

A dedication to quality and a commitment to product innovation have made Lutron the world's leading manufacturer of solid state controls to manage the visual environment. Lutron was among the first companies to be registered to ISO 9001, the broadest international quality standard.

Lutron products are available in voltages, frequencies and capacities for residential, commercial and institutional applications, and they meet or exceed applicable national and international product safety standards.

Customers in over 65 countries depend on Lutron controls for reliability, design elegance, and superior performance. For the name of your nearest representative, distributor or sales agent, call any of our worldwide offices.

Warranty

Lutron warrants each new unit, for a period of one year from the date of shipment, to be free from defects in materials or workmanship under conditions of normal use and specified ambient temperature when installed and operated under Lutron product specifications and in accordance with the applicable National Electrical Code and Safety Standards of Underwriters Laboratories. Lutron shall, at its option, repair or replace any defective unit which in its opinion, has not been improperly installed, wired, insulated, used or maintained, provided, however, that Lutron shall not be required to remove, install or re-install any defective unit and provided that Lutron is promptly notified of said defect within the aforementioned warranty period. The foregoing warranty and optional remedies are exclusive and, except for the foregoing warranties, THERE ARE NO EXPRESS OR IMPLIED WARRANTIES OF MERCHANTABILITY NOR OF ANY OTHER TYPE. In no event shall Lutron or any other seller be liable for consequential or special damages, nor for any repair work undertaken without its prior written consent, nor shall Lutron's liability on any claim for damages arising out of or connected with the manufacture, sale, installation, delivery of use of said unit ever exceed the price paid therefore.

These products may be covered by one or more of the following U.S. patents: 4,797,599; 4,803,380; 4,893,062; 5,030,893; 5,191,265; 5,430,356; 5,463,286; 5,633,540; DES 308,647; DES 310,349; DES 311,170; DES 311,382; DES 311,485; DES 311,678; DES 313,738; DES 335,867; DES 344, 264; and corresponding foreign patents. Other U.S. and foreign patents may be pending.

Lutron reserves the right to make product improvements or changes without prior notice. Lutron, GRAFIK Eye, Eco-10, Hi-lume, Serena and Architrave are trademarks of Lutron Electronics Co., Inc. AutoCAD is a trademark of Autodesk, Inc. Microsoft, Access and Windows are trademarks of Microsoft Corp.

Consult your Lutron representative for the latest product information or to find the right combination of Control Units, Accessories and Dimming Modules for a specific job.

If you need more detailed information about GRAFIK Eye controls or other Lutron lighting control products, dial into our FAX-On-Demand line through our toll-free hotline or visit us at our website.

Hotline: 1.800.523.9466

Website: www.lutron.com

World Headquarters
Lutron Electronics Co., Inc.
7200 Suter Road
Coopersburg, PA 18036-1299 U.S.A.
Toll Free: 800-523-9466
(U.S.A., Canada & Caribbean)
Tel: 610-282-3800;
International 1-610-282-3800
Fax: 610-282-3090;
International 1-610-282-1243

European Headquarters
Lutron EA Ltd.
Lutron House
6 Sovereign Close
Wapping
London, E1-9HW, England
Freephone: 0800 282107 (U.K.)
0130-8151-34 (Germany)
Tel: 0171-702-0657;
International 44-171-702-0657
Fax: 0171-480-6899;
International 44-171-480-6899

Asian Offices
Lutron Asuka Corporation K.K.
Madre Matsuda Bldg., 3F
4-13 Kioi-cho
Chiyoda-Ku, Tokyo 102, Japan
Toll Free: (0120) 083417 (Japan)
Tel: 03-3234-1486;
International 81-3-3234-1486
Fax: 03-3234-0167;
International 81-3-3234-0167

Hong Kong Sales Office
Tel: 2593-1119;
International 852-2593-1119
Fax: 2593-1197;
International 852-2593-1197

UAE, Dubai Sales Office
Tel/Fax: 04-440-206;
International 971-4-440-206

LUTRON Quality Systems
Registered to ISO 9001

Safety standards listed above apply to one or more products in the GRAFIK Eye product line. Consult factory for specific information.

LUTRON®
www.lutron.com

Printed in U.S.A 9/97 P/N 366-580

For help with applications, call:
800-523-9466 (U.S.A., Canada & Caribbean);
(1) 610-282-3800 (Other Areas)