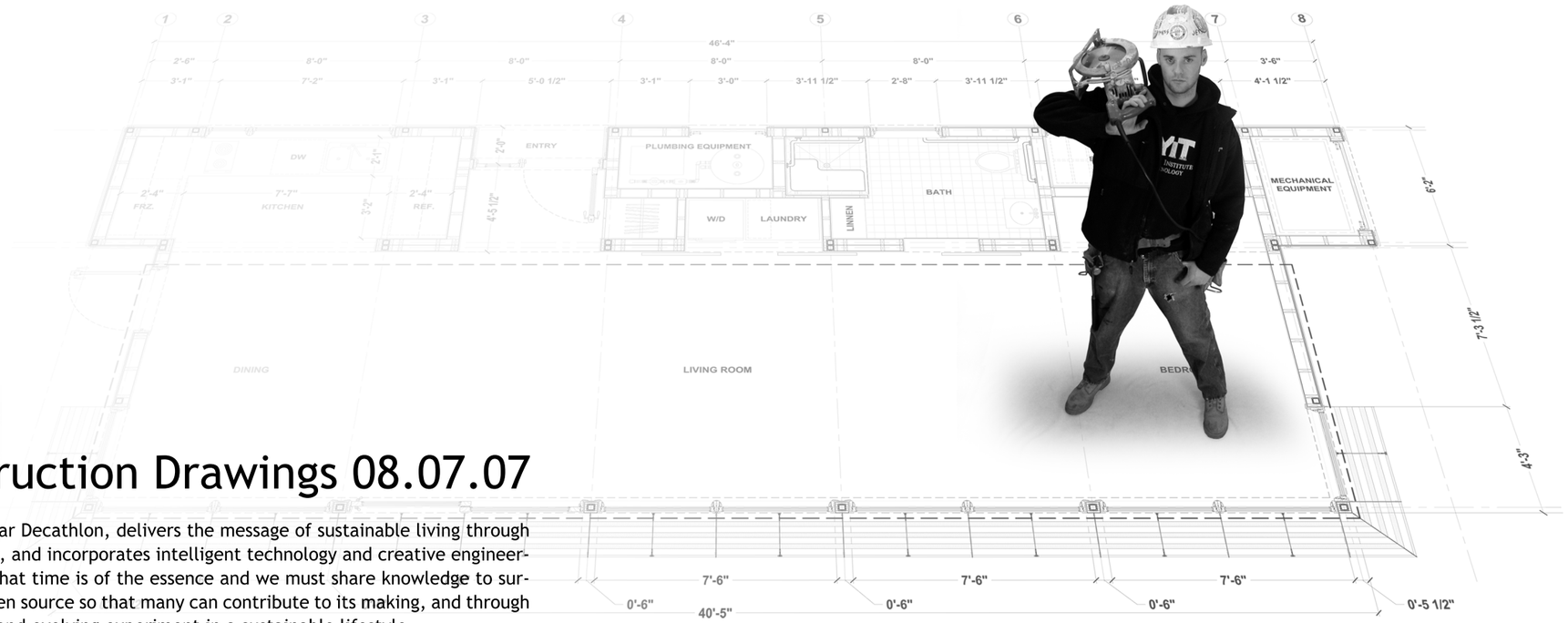

Solar Decathlon 2007 | Construction Drawings 08.07.07

NYIT

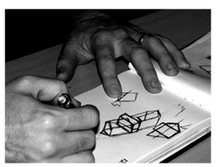

OPEN House, NYIT's entry in to the 2007 Solar Decathlon, delivers the message of sustainable living through the design of a house that is adaptable, smart, and incorporates intelligent technology and creative engineering. It is the collective thought of the team that time is of the essence and we must share knowledge to survive. Thus, OPEN House is open access and open source so that many can contribute to its making, and through feedback it can evolve; this house is an open and evolving experiment in a sustainable lifestyle.

There are two parts to OPEN House: a manifold, or core, that contains kitchen, bathroom and environmental systems; and a large, open space that encourages diverse living scenarios. The house as a whole is open, adaptable and customizable. Its flexibility enables a range of lifestyles from starter home to vacation house. The prototype built for the Solar Decathlon competition is just one iteration of a myriad of design typologies that can be created with user input which connects with our philosophy of open source design.

The living space is open to interpretation. Services are distributed throughout to create flexible zones to accommodate a multiplicity of functions. Flexible furnishings create floating micro-environments for inhabitants.

Water facilitates open exchange between house and environment. On the roof of the core is a pool of water that simulates a geothermal well by storing or dissipating heat generated by OPEN House. A waterfall off the west side of the core allows water to cool and be recycled back to the roof pond allowing inhabitants to experience the poetic engineering of the home in its environment.

OPEN House is smart. It detects temperature, humidity, power usage and water deployment. It communicates these through the internet and computer technology, creating a dynamic, informational feedback loop between OPEN House and its inhabitants.

Spaces in the home can be reinterpreted by its inhabitants, creating a flexible, educational realm where people can visualize OPEN House as a unique ecosystem coexisting within the larger ecosystem of our earth. The system of OPEN House allows for design permutations encouraging life to be lived experimentally, creatively and responsibly. We hope that the interrelationships of habitat, humans and ecology will become a new basis for human community.

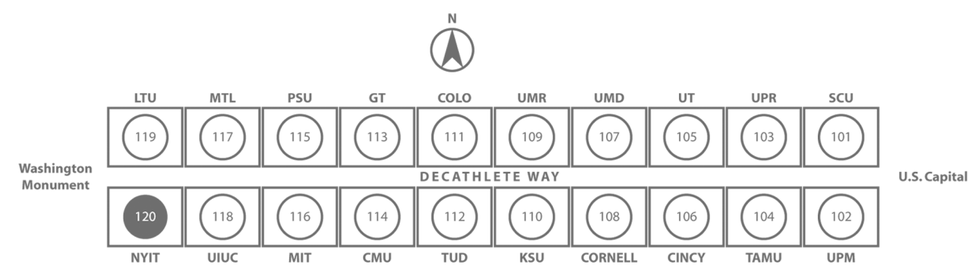

DRAWING #	DRAWING TITLE	SCALE
	GENERAL	
	COVER SHEET	_
G1.1	DRAWING INDEX	_
G1.2	NOTES, SYMBOLS & ABBREVIATIONS	_
	LANDSCAPE	
L1.0	PLANT SCHEDULE	_
L1.1	SITE PLAN	1/8" = 1' - 0"
L1.2	SITE ELEVATIONS - NORTH / SOUTH	1/8" = 1' - 0"
L1.3	SITE ELEVATIONS - EAST / WEST	1/8" = 1' - 0"
	ARCHITECTURAL	
A1.0	WINDOW & DOOR SCHEDULE	_
A1.1	ARCHITECTURAL FLOOR PLAN	1/4" = 1' - 0"
A1.2	ROOF PLAN	1/4" = 1' - 0"
A1.3	MINIMUM CONDITIONED AREA	1/4" = 1' - 0"
A1.4	MAXIMUM ALLOWABLE FOOTPRINT	1/4" = 1' - 0"
A2.1	SOUTH ELEVATION	1/4" = 1' - 0"
A2.2	NORTH ELEVATION	1/4" = 1' - 0"
A2.3	EAST ELEVATION	1/4" = 1' - 0"
A2.4	WEST ELEVATION	1/4" = 1' - 0"
A3.1	LONGITUDINAL SECTION THROUGH LIVING SPACE	1/4" = 1' - 0"
A3.2	LONGITUDINAL SECTION THROUGH CORE	1/4" = 1' - 0"
A3.3	TRANSVERSE SECTION THROUGH KITCHEN	1/4" = 1' - 0"
A4.0	PLAN DETAILS	1-1/2" = 1' - 0"
A4.1	PLAN DETAILS	1-1/2" = 1' - 0"
A4.2	BIPV OVERHANG DETAILS	AS NOTED
A4.3	ROOF POND DETAILS	AS NOTED
A5.0	FINISH SCHEDULE AND NOTES	_
A5.1	FINISH PLAN	1/4 = 1'-0"
A5.2	INTERIOR SLIDING DOOR LAYOUT	1/4 = 1'-0"
A5.3	SLIDING DOOR DETAILS	AS NOTED
A5.4	SLIDING DOOR DETAILS	AS NOTED
A6.0	LIFE SAFETY NOTES & ADA REQUIREMENTS	_
A6.1	FIRE SAFETY PLAN	1/4" = 1' - 0"
A6.2	TOUR ROUTE PLAN	1/8" = 1' - 0"
A6.3	ADA DETAILS	AS NOTED
A6.4	ADA DETAILS	AS NOTED
	STRUCTURAL	
S1.0	STRUCTURAL NOTES & SPECS	_
S1.1	STRUCTURAL STEEL PLAN	1/4" = 1' - 0"
S1.1A	FOUNDATION PLAN	3/16" = 1'-0"
S1.2	STRUCTURAL ROOF PLAN	1/4" = 1' - 0"
S1.3	STEEL FRAME SECTIONS & ELEVATIONS	1/4" = 1' - 0"
S1.4	STEEL FRAME SECTIONS & ELEVATIONS	1/4" = 1' - 0"
S1.5	STEEL FRAME SECTIONS & ELEVATIONS	1/4" = 1' - 0"
S1.6	STEEL FRAME SECTIONS & ELEVATIONS	1/4" = 1' - 0"

DRAWING #	DRAWING TITLE	SCALE
	STRUCTURAL(cont.)	
S1.7	OPEN SPACE FRAME ISO	1/4" = 1' - 0"
S1.8	CORE FRAME ISO	1/4" = 1' - 0"
S1.9	ROOF FRAME ISO	1/4" = 1' - 0"
S2.1	STRUCTURAL DETAILS	1 1/2" = 1' - 0"
S2.2	STRUCTURAL DETAILS	1 1/2" = 1' - 0"
S2.3	STRUCTURAL DETAILS	1 1/2" = 1' - 0"
S2.4	STRUCTURAL DETAILS	1 1/2" = 1' - 0"
S2.5	STRUCTURAL DETAILS	1 1/2" = 1' - 0"
S3.1	DECK FRAMING PLAN	3/16" = 1'-0"
S3.2	DECK CONSTRUCTION MODULES	1/4" = 1'-0"
S3.3	TYPICAL DECK MODULE DETAIL	1/2" = 1'-0"
S3.4	RAMP & RAILING DETAILS	AS NOTED
S4.1	SIP LAYOUT - FLOOR	1/4" = 1'-0"
S4.2	SIP LAYOUT - ROOF	1/4" = 1'-0"
	ELECTRICAL	
E1.1	PV WIRING DIAGRAM	_
E1.2	ELECTRICAL POWER PLAN	1/4" = 1'-0"
E1.3	LIGHTING PLAN	1/4" = 1'-0"
E1.4	PANEL SCHEDULE	_
	PLUMBING	
P1.1	SOLAR HOT WATER DIAGRAM	_
P1.2	PLUMBING RISER DIAGRAMS	_
P1.3	PLUMBING RISER AXON	_
P1.4	PLUMBING FIXTURE PLAN	
	MECHANICAL	
M1.1	THERMAL SYSTEMS DIAGRAM	_
M1.2	HVAC DISTRIBUTION DIAGRAM	_
M1.3	HVAC DUCT LAYOUT	_

OPEN House

New York Institute of Technology
NORTHERN BLVD., OLD WESTBURY, NY 11568
TEL: 516-686-7659 FAX: 516-686-7921

Solar Decathlon 2007

CONSTRUCTION DOCUMENTS

TITLE: DRAWING INDEX

Scale: NOT TO SCALE

Date: August 7th, 2007

Drawn By: MM

Checked By: MM

REVISIONS

No.	Date:	Description:
1	06.13.06	Design Development Drawings
2	03.06.07	Construction Drawings Rev. 1
3	08.07.07	Construction Drawings Rev. 2

DRAWING:

G 1.1

GENERAL NOTES

1. ALL WORK SHALL BE PERFORMED IN STRICT ACCORDANCE WITH THE INTERNATIONAL RESIDENTIAL CODE AND THE SOLAR DECATHLON 2007 RULES & REGULATIONS LATEST EDITION AND ALL OTHER GOVERNING AGENCIES BUILDING REQUIREMENTS.

2. ALL ITEMS OF WORK IDENTIFIED ON THESE DRAWINGS ARE DESIGNATED TO BE NEW UNLESS OTHERWISE NOTED.

3. WINDOW AND DOOR MODELS AS MANUFACTURED BY MARVIN. REFER TO WINDOW AND DOOR SCHEDULE ON SHEET A1.0 FOR DIMENSIONS AND SPECIFIC DETAILS.

4. THESE DRAWINGS ARE INSTRUMENTS OF SERVICE AND SHALL REMAIN THE PROPERTY OF THE NEW YORK INSTITUTE OF TECHNOLOGY, WHETHER THE PROJECT FOR WHICH THEY ARE MADE IS EXECUTED OR NOT. THEY MAY NOT BE USED ON ANY OTHER PROJECT EXCEPT BY WRITTEN AUTHORIZATION BY THE NEW YORK INSTITUTE OF TECHNOLOGY.

5. DO NOT SCALE DRAWINGS. WRITTEN DIMENSIONS SUPERCEDE SCALED DIMENSIONS.

DRAWING SYMBOLS

ELEV. 1 A 2.X	ELEVATION BUBBLE
SECT. 1 A 3.X	SECTION BUBBLE
1 2 3 4 A5.X	INTERIOR ELEVATION CALLOUT
1 A 4.X	DETAIL CALLOUT
1	DOOR CALLOUT
A	WINDOW CALLOUT
3	COLUMN GRID
ELEV.	ELEVATION DATUM
	CENTER LINE
	HIDDEN LINE
	LINE ABOVE

S	SINGLE POLE SWITCH
S_d	SINGLE POLE DIMMER SWITCH
S_3	3-WAY SWITCH
S_{3d}	3-WAY SWITCH WITH DIMMER
S_4	4-WAY SWITCH
S_{dc}	DIGITAL CONTROL SWITCH
¢	OPERABLE CLERESTORY SWITCH
	120V DUPLEX RECEPTACLE
	240V RECEPTACLE
GFI	120 V RECEPTACLE WITH GROUND FAULT INTERRUPT
	120 V FLOOR RECEPTACLE
J	JUNCTION BOX FOR DIRECT CONNECTION
T	THERMOSTAT
	EXHAUST FAN
	AIR SUPPLY FIXTURE
	RETURN AIR FIXTURE
FE	FIRE EXTINGUISHER
S.D	SMOKE DETECTOR
C.D	CARBON MONOXIDE DETECTOR

UNDER CABINET FLUORESCENT - 48"
UNDER CABINET FLUORESCENT - 24"
RECESSED FLOURESCENT - 36"
SURFACE MOUNTED COMPACT FLUORESCENT - 6"
RECESSED LED - 6"
RECESSED WATER RESISTANT LED - 6"
SURFACE MOUNTED LED - 12" SQUARE
SURFACE MOUNTED SOLAR ADDRESS LIGHT

ABBREVIATIONS

ABV.	ABOVE
A.F.F.	ABOVE FINISHED FLOOR
A.F.G	ABOVE FINISHED GRADE
ACC.	ACCESS
ACQ	ALKALINE COPPER QUARTERNARY
ADA	AMERICANS WITH DISABILITES ACT
A/C	AIR CONDITIONING
ADJ.	ADJUSTABLE
ALUM.	ALUMINUM
ACOUST.	ACOUSTICAL
APPROX.	APPROXIMATELY
ARCH.	ARCHITECTURAL
BLK.	BLOCKING OR BLOCK
BD.	BOARD
BLDG.	BUILDING
BM.	BEAM
B.O.	BOTTOM OF
B.P.	BASE PLATE
CLG.	CEILING
C.J	CEILING JOISTS
C.I.F	CUT IN FIELD
CONC.	CONCRETE
C.M.U	CONCRETE MASONRY UNITS
C.O.	CLEAN OUT
COL.	COLUMN
CONST.	CONSTRUCTION
CONN.	CONNECTOR
CONT.	CONTINUOUS
CORR.	CORRUGATED
C.S.	COUNTER SUNK
D.J.	DECK JOISTS
DOE	DEPARTMENT OF ENERGY
DET.	DETAIL
DIA.	DIAMETER
DIM.	DIMENSION
DW	DISHWASHER
DN.	DOWN
D.S.	DOWN SPOUT
DWG.	DRAWING
EA.	EACH
E.O.	EDGE OF
ELEC.	ELECTRIC
EL.	ELEVATION
ERV	ENERGY RECOVERY VENTILATOR
EQ.	EQUAL
EPDM	ETHYLENE PROPYLENE DIENE MONOMER
EXH.	EXHAUST
EXP.	EXPANSION
E.J.	EXPANSION JOINT
EXT.	EXTERIOR
F.O.S	FACE OF STUD
FG.	FIBERGLASS
FIN.	FINISH
F.F.	FINISHED FLOOR
F.O.	FINISHED OPENING
F.E.	FIRE EXTINGUISHER
F.R.	FIRE RATED/RETARDANT
FIXT.	FIXTURE
FL.	FLOOR
F.D.	FLOOR DRAIN
F.J.	FLOOR JOISTS
FLUOR.	FLUORESCENT
FTG.	FOOTING
FRZ.	FREEZER
GALV.	GALVANIZED
GA.	GAUGE
G.W.B.	GYPSUM WALL BOARD
GYP.	GYPSUM
HD.	HARD
HDR.	HEADER
HEX. HD.	HEXAGONAL HEAD
H.P.	HIGH POINT
HORIZ.	HOLLZONTAL
H.B.	HOSE BIB
HR.	HOUR
I.B.C	INTERNATIONAL BUILDING CODE
I.F.C	INTERNATIONAL FIRE CODE
I.R.C	INTERNATIONAL RESIDENTIAL CODE
INSUL.	INSULATION
I.D.	INTERIOR DESIGN
JST.	JOIST
LAM.	LAMINATED
L.V.L.	LAMINATED VENEER LUMBER
L.O.	LINE OF
L.P.	LOW POINT
MFGR.	MANUFACTURER
MAS.	MASONRY
M.O.	MASONRY OPENING
MAX.	MAXIMUM
MECH.	MECHANICAL
MDF	MEDIUM DENSITY FIBERBOARD
MTL.	METAL
MIN.	MINIMUM
MISC.	MISCELLANEOUS
MULL.	MULLION
NREL	NATIONAL RENEWABLE ENERGY LABORATORY
NAT.	NATURAL
N/A	NOT APPLICABLE
N.I.C	NOT IN CONTRACT
N.T.S.	NOT TO SCALE
NO.	NUMBER
O.C.	ON CENTER
OPP.	OPPOSITE
O.S.B.	ORIENTED STRAND BOARD
O.D.	OUTSIDE DIAMETER
OH.	OVERHEAD
PKG.	PACKAGE
PTD.	PAINTED
PNL.	PANEL
PV	PHOTOVOLTAIC
PLAS.	PLASTIC
PL.	PLATE
PVC	POLYVINYL CHLORIDE
PREC.	PRECAST
R.	RADIUS OR RISER
REF.	REFRIGERATOR
REINF.	REINFORCED
REQD.	REQUIRED
R.J.	ROOF JOISTS
R.R.	ROOF RAFTERS
RM.	ROOM
R.O.	ROUGH OPENING
SHT.	SHEET
S.G.	SAFETY GLASS
SIM.	SIMILAR
S.A.F.B	SOUND ATTENUATION FIRE BLANKET
SQ.	SQUARE
S.S.	STAINLESS STEEL
STL.	STEEL
STRUT	STRUCTURAL
S.I.P	STRUCTURAL INSULATED PANEL
SUSP.	SUSPENDED
T.G.	TEMPERED GLASS
TEMP.	TEMPORARY
TH.	THICK OR THICKNESS
TBD	TO BE DETERMINED
T&G	TONGUE AND GROOVE
T.O.	TOP OF
T.	TREAD
TRTD	TREATED
TYP.	TYPICAL
UL	UNDERWRITERS LABORATORIES
UON.	UNLESS OTHERWISE NOTED
V.B.	VAPOR BARRIER
V.I.F.	VERIFY IN FIELD
W/D	WASHER / DRYER
W.P.	WATERPROOF
W/	WITH
W/O	WITHOUT
WD.	WOOD
W.S.	WOOD SCREW

OPENHouse

New York Institute of Technology
NORTHERN BLVD., OLD WESTBURY, NY 11568
TEL: 516-686-7659 FAX: 516-686-7921

Solar Decathlon 2007

CONSTRUCTION DOCUMENTS

TITLE: NOTES, SYMBOLS & ABBREVIATIONS

REVISIONS

No.	Date:	Description:
1	06.13.06	Design Development Drawings
2	03.06.07	Construction Drawings Rev. 1
3	08.07.07	Construction Drawings Rev. 2

Scale: NOT TO SCALE

Date: August 7th, 2007

Drawn By: MM

Checked By: MM

DRAWING:

G 1.2

SHEET: 3 of 66

PLANT SCHEDULE

	GARDEN	KEY	NAME	TYPE	QTY	SIZE	REMARKS
FRUITS AND VEGETABLE GARDEN (A)	A	BAS	BASIL	HERB	6	2 QT	USE IN SAUCES, STEWS...
	A	SAG	SAGE	HERB			
	A	ROS	ROSEMARY	HERB			
	A	MIN	MINT	HERB			
	A	THY	THYME	HERB			
	A	BEE	BEETS	VEGETABLE			
	A	BRO	BROCCOLI	VEGETABLE			
	A	CAR	CARROTS	VEGETABLE			
	A	CAU	CAULIFLOWER	VEGETABLE			
	A	MUS	MUSTARD GREENS	VEGETABLE			
	A	SPI	SPINACH	VEGETABLE			
	A	BRU	BRUSSEL SPROUTS	VEGETABLE			
	A	LEE	LEEKS	VEGETABLE			
	A	SWI	SWISS CHARD	VEGETABLE			
	A	BEA	BEANS	VEGETABLE			
	A	PUM	PUMPKIN	VEGETABLE			
	A	TOM	TOMATOES	VEGETABLE			
	A	SQU	WINTER SQUASH	VEGETABLE			
	A	STR	STRAWBERRY	FRUIT			
FLOWER GARDEN (B)	B	SHD	SHASTA DAISIES	PERRENIAL	3	POTS	
	B	BES	BLACK-EYED SUSANS	PERRENIAL	3	POTS	
	B	RUS	RUSSIAN SAGE	PERRENIAL	3	POTS	
	B	YAR	YARROW	PERRENIAL	3	POTS	
	B	MAR	MARIGOLDS	ANNUAL	1 FLAT	(48 QTY)	
	B	COR	COREOPSIS	PERRENIAL	3	POTS	
	B	SAL	SALVIA (OR VERBENA)	ANNUAL/PER.	½ FLAT	(24 QTY)	
	B	DAH	DAHLIAS	ANNUAL	6	POTS	
	B	HEL	HELIOTROPE	ANNUAL	3	POTS	
	B	BUT	BUTTERFLY BUSH	PERRENIAL	1	POT	
BACK GARDEN (C)	C	BFG	BLUE FESCUE GRASS	GRASS	12		PLANT 3 TO A POT
	D	COL	COLEUS	ANNUAL	12		SHADE, COLORFUL FOLIAGE
	D	OST	OSTRICH PLUME FERN	PERRENIAL	12		SHADE, FERN
	D	IMP	IMPATIENTS	ANNUAL	12		FLOWERS, SHADE
FRONT GARDEN (D)	D	BFG	BLUE FESCUE GRASS	GRASS	12		SHADE
	D	COL	COLEUS	ANNUAL	12		SHADE, COLORFUL FOLIAGE
	D	OST	OSTRICH PLUME FERN	PERRENIAL	12		SHADE, FERN
	D	IMP	IMPATIENTS	ANNUAL	12		FLOWERS, SHADE

KEY PLAN - GARDENS

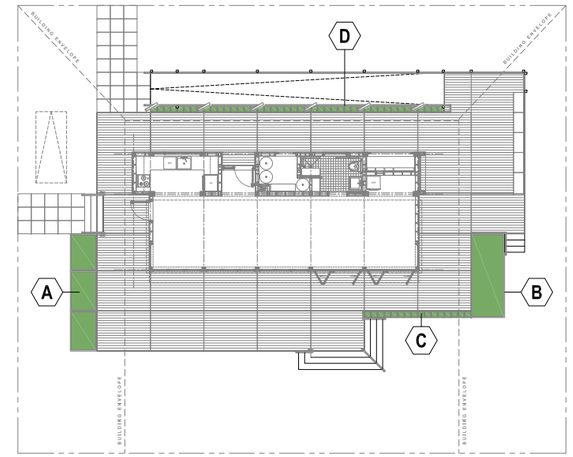

OPEN House

New York Institute of Technology
NORTHERN BLVD., OLD WESTBURY, NY 11568
TEL: 516-686-7659 FAX: 516-686-7921

Solar Decathlon 2007

CONSTRUCTION DOCUMENTS

TITLE: PLANT SCHEDUAL

Scale: NOT TO SCALE

Date: August 7th, 2007

Drawn By: JEC

Checked By: MM

REVISIONS

No.	Date:	Description:
1	06.13.06	Design Development Drawings
2	03.06.07	Construction Drawings Rev. 1
3	08.07.07	Construction Drawings Rev. 2

DRAWING:

L 1.0

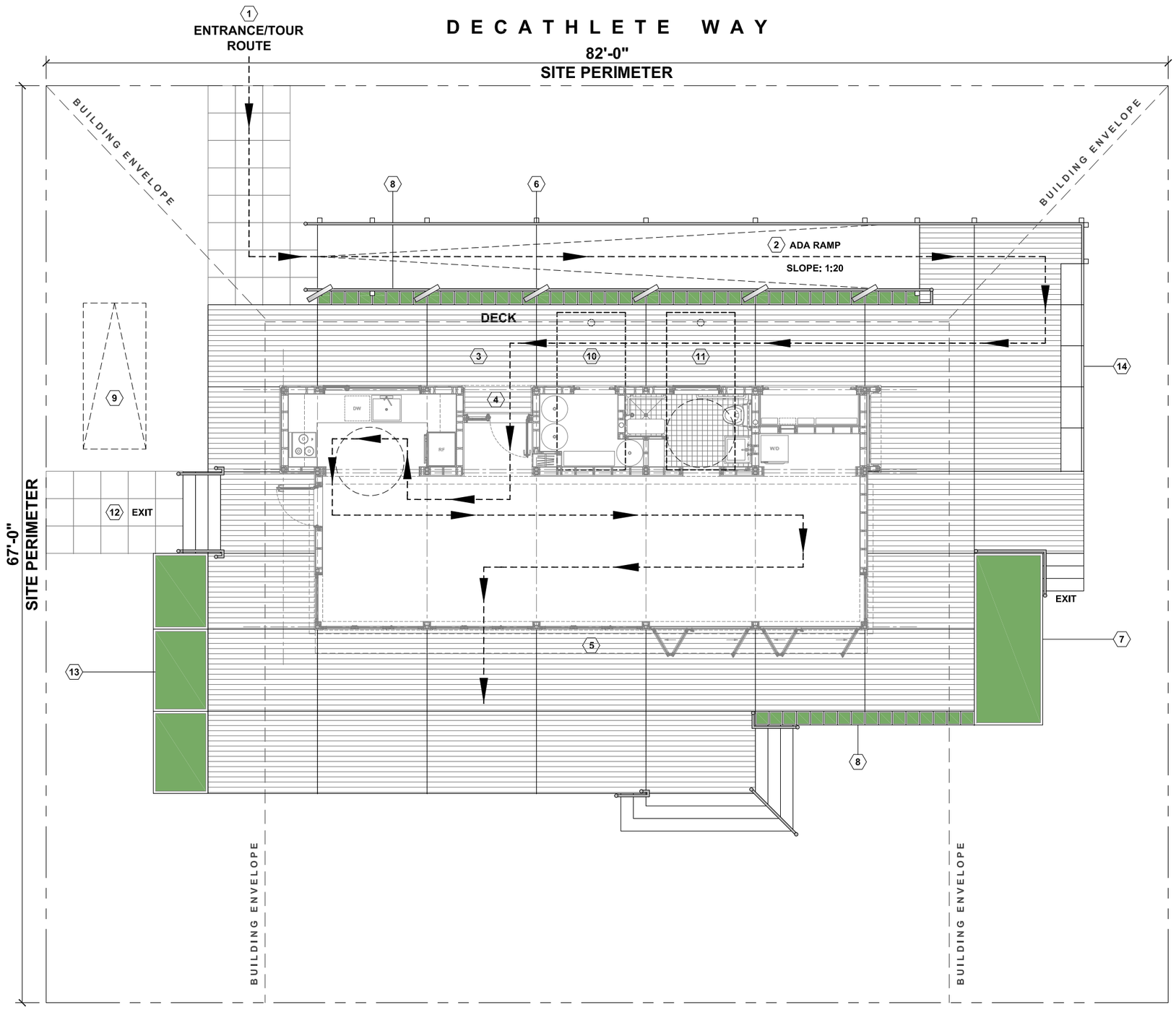

NOTES:

WATER STORAGE:
DOMESTIC WATER SUPPLY AND GREYWATER TANKS LOCATED UNDER DECK ARE TO BE PROVIDED WITH A MINIMUM 4" FILLING PORT ON NORTH SIDE OF TANK.

FINISHED DECKING MATERIAL IS TO BE REMOVED IN ORDER TO PROVIDE A MINIMUME 12" CLEARANCE AS SPECIFIED IN SECTION 13.2 OF THE SOLAR DECATHLON RULES AND REGULATIONS.

WATER TANKS ARE TO BE POINT LOADED TO PROVIVE MINIMUM IMPACT ON TURF.

LEGEND:

1. SITE ENTRY
2. ADA RAMP
3. DECK
4. HOUSE ENTRY
5. REAR ENTRY
6. INFORMATION STANDS
7. NATIVE GRASSES
8. NATIVE PLANT LIVE
9. CAR STATION
10. CUSTOM SUPPLY WATER TANK (UNDER DECK) 350 GALLONS
11. CUSTOM GREY WATER TANK (UNDER DECK) 350 GALLONS
12. 2'x2' RUBBER MATS
13. FRUIT & VEGETABLE GARDEN
14. BATTERY STORAGE / BENCH

SITE PLAN
SCALE 1/8" = 1'- 0"

0 4' 8' 16'

OPEN House

New York Institute of Technology
NORTHERN BLVD., OLD WESTBURY, NY 11568
TEL: 516-686-7659 FAX: 516-686-7921

Solar Decathlon 2007

CONSTRUCTION DOCUMENTS

TITLE: SITE PLAN

Scale: 1/8" = 1' - 0"
Date: August 7th, 2007
Drawn By: JEC
Checked By: MM

REVISIONS

No.	Date:	Description:
1	06.13.06	Design Development Drawings
2	03.06.07	Construction Drawings Rev. 1
3	08.07.07	Construction Drawings Rev. 2

DRAWING:

L 1.1

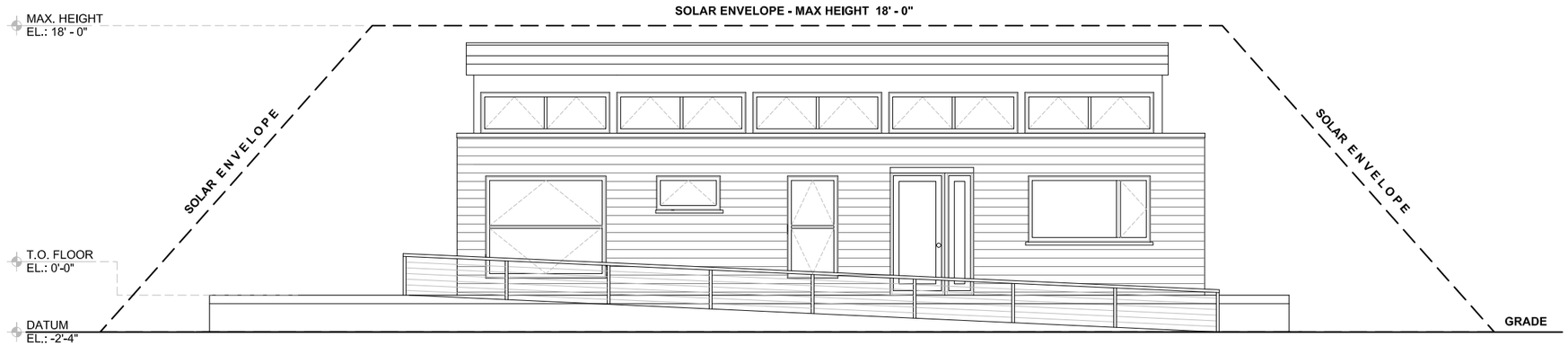

SITE ELEVATION NORTH
SCALE 1/8" = 1'- 0"

0 4' 8' 16'

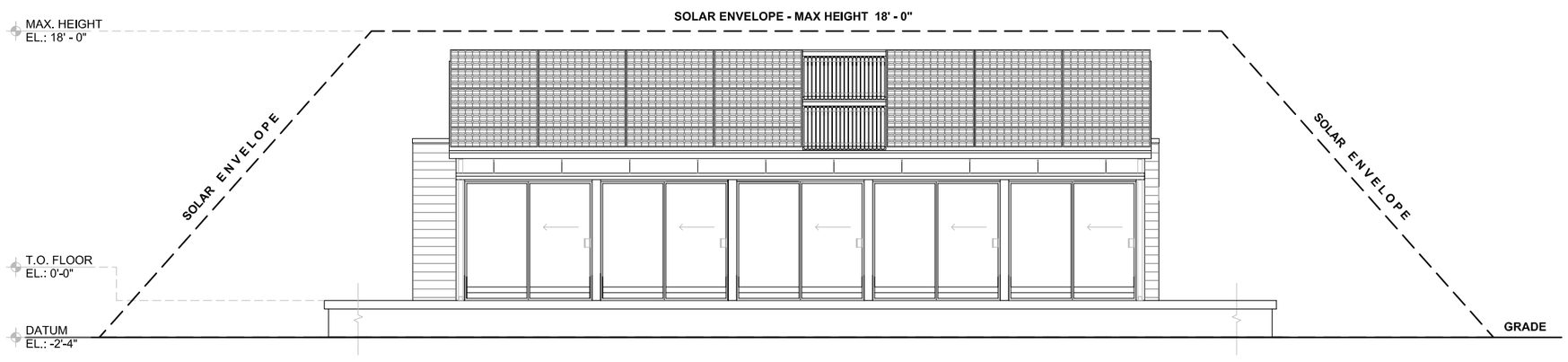

SITE ELEVATION SOUTH
SCALE 1/8" = 1'- 0"

0 4' 8' 16'

OPEN House

New York Institute of Technology
NORTHERN BLVD., OLD WESTBURY, NY 11568
TEL: 516-686-7659 FAX: 516-686-7921

Solar Decathlon 2007

CONSTRUCTION DOCUMENTS

TITLE: SITE ELEVATIONS - NORTH / SOUTH

Scale: 1/8" = 1' - 0"

Date: August 7th, 2007

Drawn By: AC

Checked By: MM

REVISIONS

No.	Date:	Description:
1	06.13.06	Design Development Drawings
2	03.06.07	Construction Drawings Rev. 1
3	08.07.07	Construction Drawings Rev. 2

DRAWING:

L 1.2

SHEET: 6 of 66

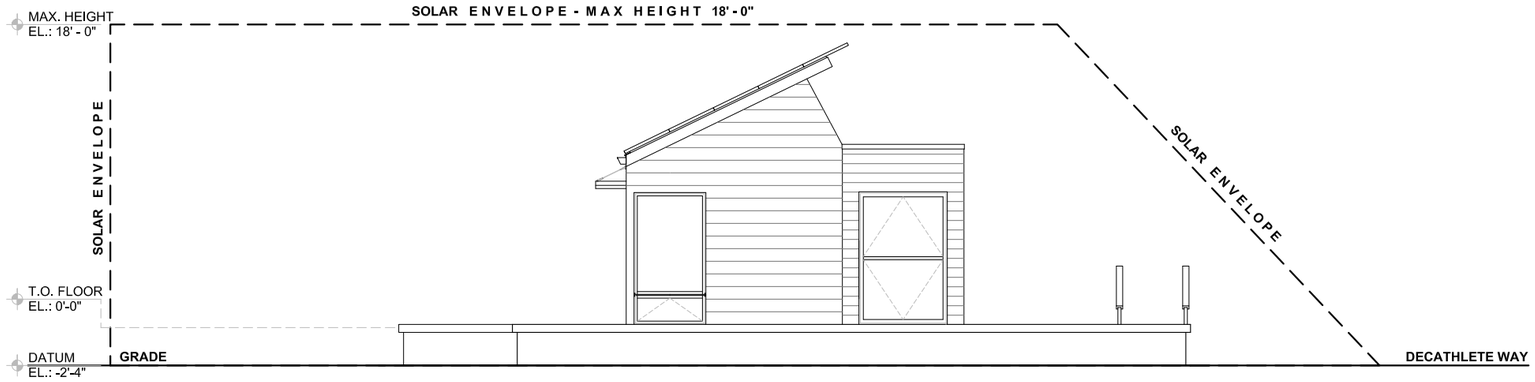

SITE ELEVATION - WEST
SCALE 1/8" = 1'- 0"

0 4' 8' 16

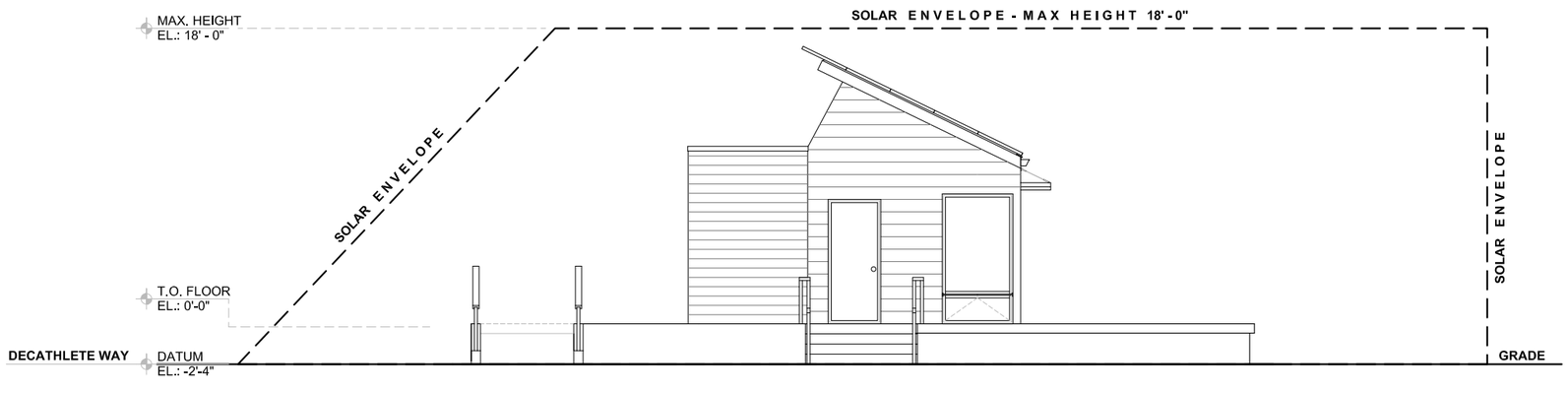

SITE ELEVATION - WEST
SCALE 1/8" = 1'- 0"

0 4' 8' 16

OPENHouse

New York Institute of Technology
NORTHERN BLVD., OLD WESTBURY, NY 11568
TEL: 516-686-7659 FAX: 516-686-7921

Solar Decathlon 2007

CONSTRUCTION DOCUMENTS

TITLE: SITE ELEVATIONS - EAST / WEST

Scale: 1/8" = 1' - 0"

Date: August 7th, 2007

Drawn By: AC

Checked By: MM

REVISIONS

No.	Date:	Description:
1	06.13.06	Design Development Drawings
2	03.06.07	Construction Drawings Rev. 1
3	08.07.07	Construction Drawings Rev. 2

DRAWING:

L 1.3

SHEET: 7 of 66

WINDOW SCHEDULE											
UNIT	LOCATION	MANUFACTURER	PRODUCT NUMBER	QTY	UNIT SIZE	ROUGH OPENING:	SPECIES	INTERIOR FINISH	EXTERIOR FINISH	GLAZING TYPE	REMARKS
A	KITCHEN	ANDERSON	P5535-CN135 (F-R)	1	7'-1 7/16" X 3'-4 13/16"	7'-2" X 3'-5 5/8"	WOOD CLAD	WHITE	WHITE	HIGH PERFORMANCE LOW-E4 GLASS	STATIONARY PICTURE MULLED WITH OPERABLE CASEMENT WINDOW
B	BATHROOM	ANDERSON	AN351 (V)	1	3'-4 13/16" X 1'-8 1/2"	3'-5 3/8" X 1'-9"	WOOD CLAD	WHITE	WHITE	HIGH PERFORMANCE LOW-E4 GLASS	AWNING WINDOW
C	CELESTORY	ANDERSON	A351-2 (V-V)	5	6'-9 3/4" X 2'-0 1/8"	6'-10 1/4" X 2'-0 5/8"	WOOD CLAD	WHITE	WHITE	HIGH PERFORMANCE LOW-E4 GLASS	MOTORIZED AWNING WINDOW - FACTORY MULLED
D	SOUTH EAST/WEST	NANAWALL	WD68 TT	2	3'-8" X 7'-0"	3'-9" X 7'-0 1/2"	DOUGLAS FIR	NATURAL WOOD	NATURAL WOOD	LOW-E KRYPTON FILL W/HEAT MIRROR	TILT TURN

WINDOW SCHEDULE
1/4" = 1'- 0"

DOOR SCHEDULE											
UNIT	LOCATION	MANUFACTURER	PRODUCT NUMBER	QTY	UNIT SIZE	ROUGH OPENING:	SPECIES	INTERIOR FINISH	EXTERIOR FINISH	GLAZING TYPE	REMARKS
1	NORTH ENTRY	ANDERSON	FWH31611-FWSL17611	1	4'-7 1/8" X 6'-10 3/8"	4'-7 7/8" X 6'-11"	WOOD CLAD	WHITE	WHITE	HIGH PERFORMANCE LOW-E4 GLASS	INSWING / LEFT HINGED DOOR W/FULL LITE MULLED WITH SIDELITE
2	WEST ENTRY	ANDERSON	FWO31611 (AL)	1	3'-1 1/2" X 7'-0"	3'-2 1/2" X 7'-1/2"	WOOD CLAD	WHITE	WHITE	HIGH PERFORMANCE LOW-E4 GLASS	OUTSWING / LEFT HINGED DOOR W/FULL LITE
3	SOUTH WALL	NANAWALL	WD66	5	7'-5" X 7'-0"	7'-6" X 7'-0 1/2"	DOUGLAS FIR	NATURAL WOOD	NATURAL WOOD	LOW-E KRYPTON FILL W/HEAT MIRROR	2L1R OUTSWING BI-FOLDING DOORS
4	MECH. ROOM	CUSTOM	NA	1	3'-0" X 7'-0"	3'-1" X 7'-0 1/2"	ALUMINUM	ALUMINUM	ALUMINUM	FROSTED GLASS	CUSTOM HORIZONTAL BIFOLD DOOR
5	ELEC. ROOM	CUSTOM	NA	1	6'-10" X 7'-0"	6'-11" X 7'-0 1/2"	ALUMINUM	ALUMINUM	ALUMINUM	FROSTED GLASS	CUSTOM HORIZONTAL BIFOLD DOOR

DOOR SCHEDULE
1/4" = 1'- 0"

OPEN House

New York Institute of Technology
NORTHERN BLVD., OLD WESTBURY, NY 11568
TEL: 516-686-7659 FAX: 516-686-7921

Solar Decathlon 2007

CONSTRUCTION DOCUMENTS

TITLE: **WINDOW & DOOR SCHEDULE**

Scale: 1/4" = 1'- 0"

Date: August 7th, 2007

Drawn By: TZ

Checked By: MM

REVISIONS

No.	Date:	Description:
1	06.13.06	Design Development Drawings
2	03.06.07	Construction Drawings Rev. 1
3	08.07.07	Construction Drawings Rev. 2

DRAWING:

A 1.0

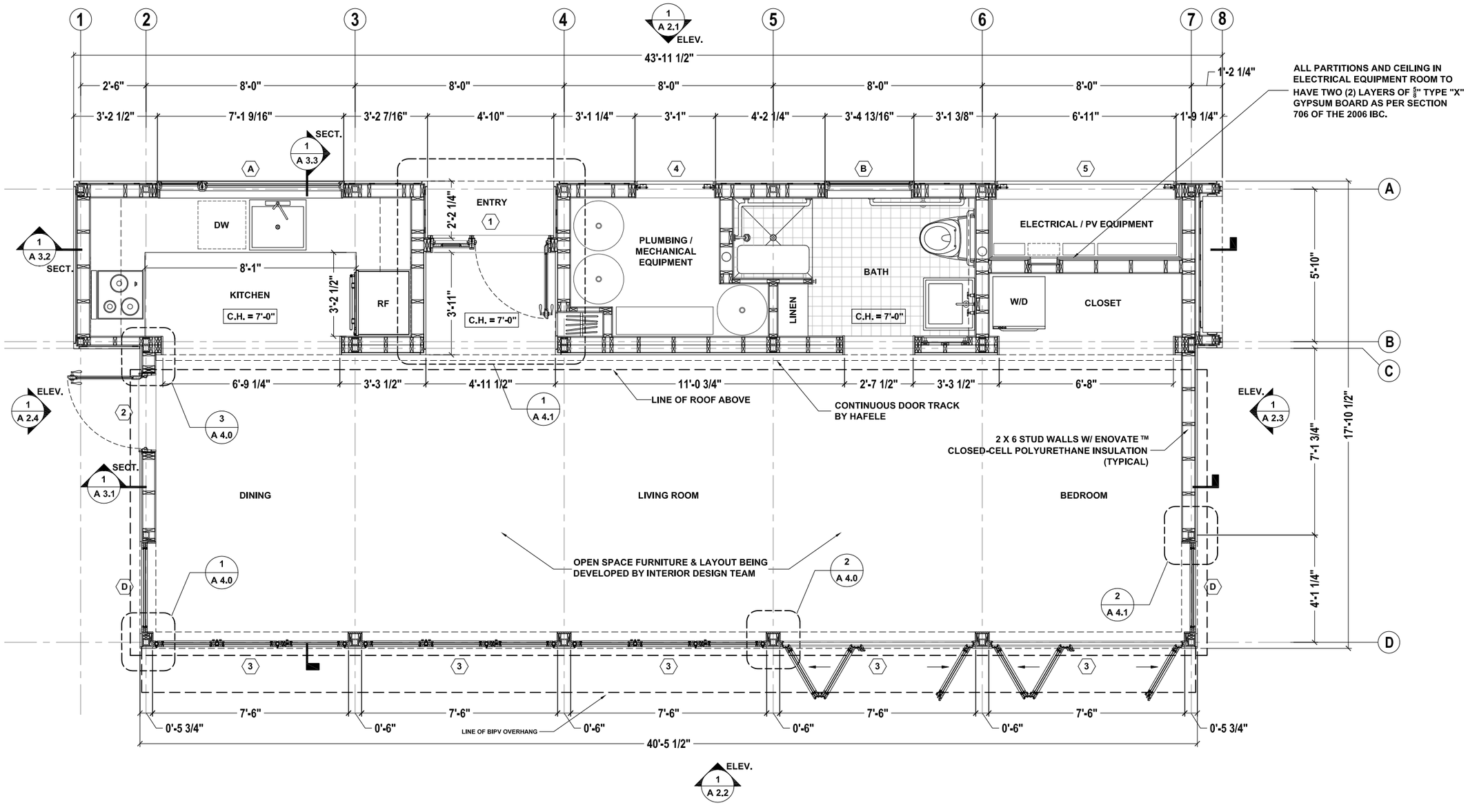

ARCHITECTURAL FLOOR PLAN

SCALE 1/4" = 1'- 0"

0 2' 4' 8'

OPEN House

New York Institute of Technology

NORTHERN BLVD., OLD WESTBURY, NY 11568
TEL: 516-686-7659 FAX: 516-686-7921

Solar Decathlon 2007

CONSTRUCTION DOCUMENTS

TITLE: **ARCHITECTURAL FLOOR PLAN**

Scale: 1/4" = 1' - 0"

Date: August 7th, 2007

Drawn By: MM

Checked By: MM

REVISIONS

No.	Date:	Description:
1	06.13.06	Design Development Drawings
2	03.06.07	Construction Drawings Rev. 1
3	08.07.07	Construction Drawings Rev. 2

DRAWING:

A 1.1

SHEET: 9 of 66

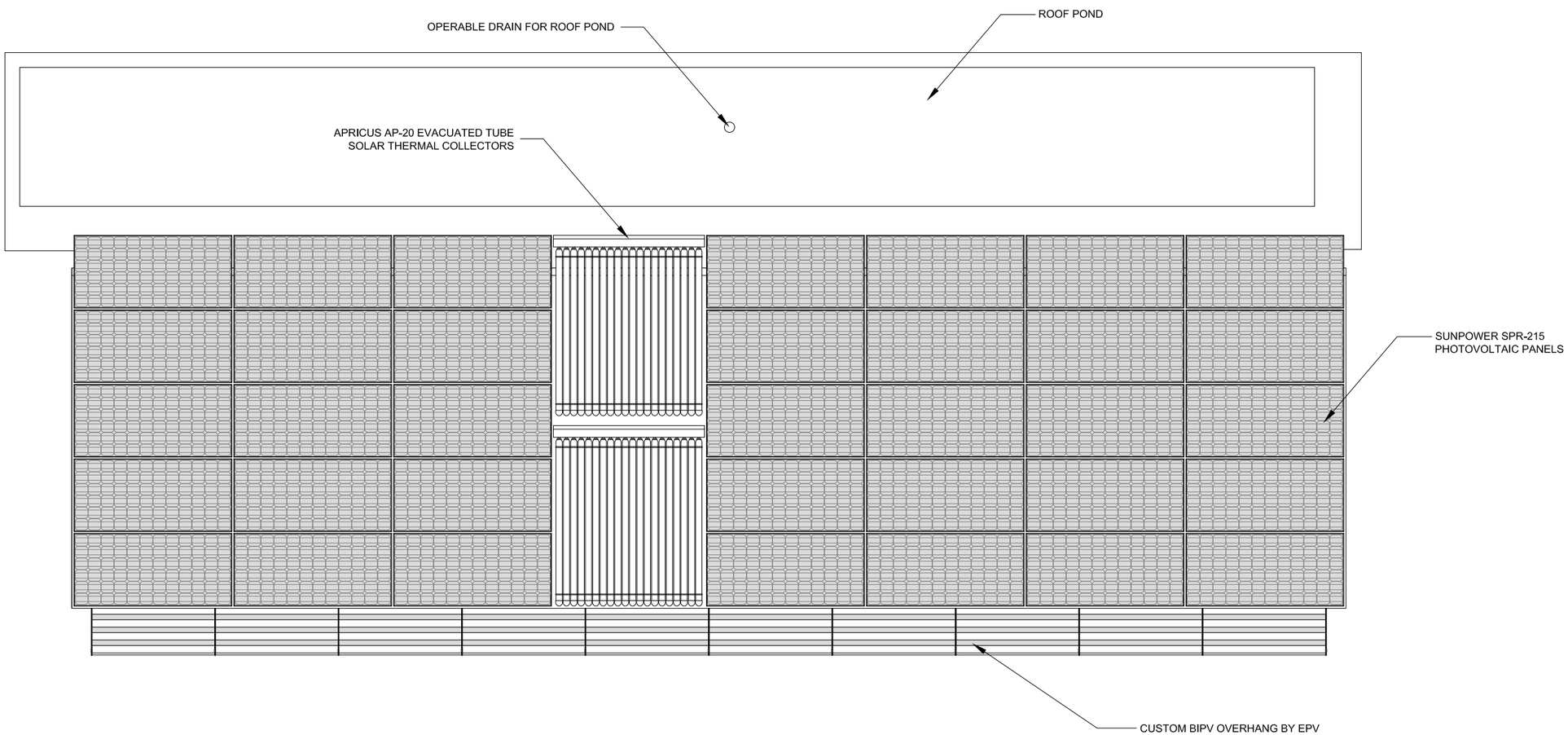

ROOF PLAN
SCALE 1/4" = 1'- 0"

0 2' 4' 8'

OPENHouse

New York Institute of Technology
NORTHERN BLVD., OLD WESTBURY, NY 11568
TEL: 516-686-7659 FAX: 516-686-7921

Solar Decathlon 2007

CONSTRUCTION DOCUMENTS

TITLE: **ROOF PLAN**

Scale: 1/4" = 1' - 0"

Date: August 7th, 2007

Drawn By: MM Checked By: MM

REVISIONS

No.	Date:	Description:
1	06.13.06	Design Development Drawings
2	03.06.07	Construction Drawings Rev. 1
3	08.07.07	Construction Drawings Rev. 2

DRAWING:

A 1.2

SHEET: 10 of 66

NOTES:

INTERIOR CONDITIONED SPACE REPRESENTED BY THE SHADED AREA IS CALCULATED TO BE APPROX. 595 SF, WHICH IS IN COMPLIANCE WITH SECTION 11.3 OF THE SOLAR DECATHLON RULES AND REGULATIONS.

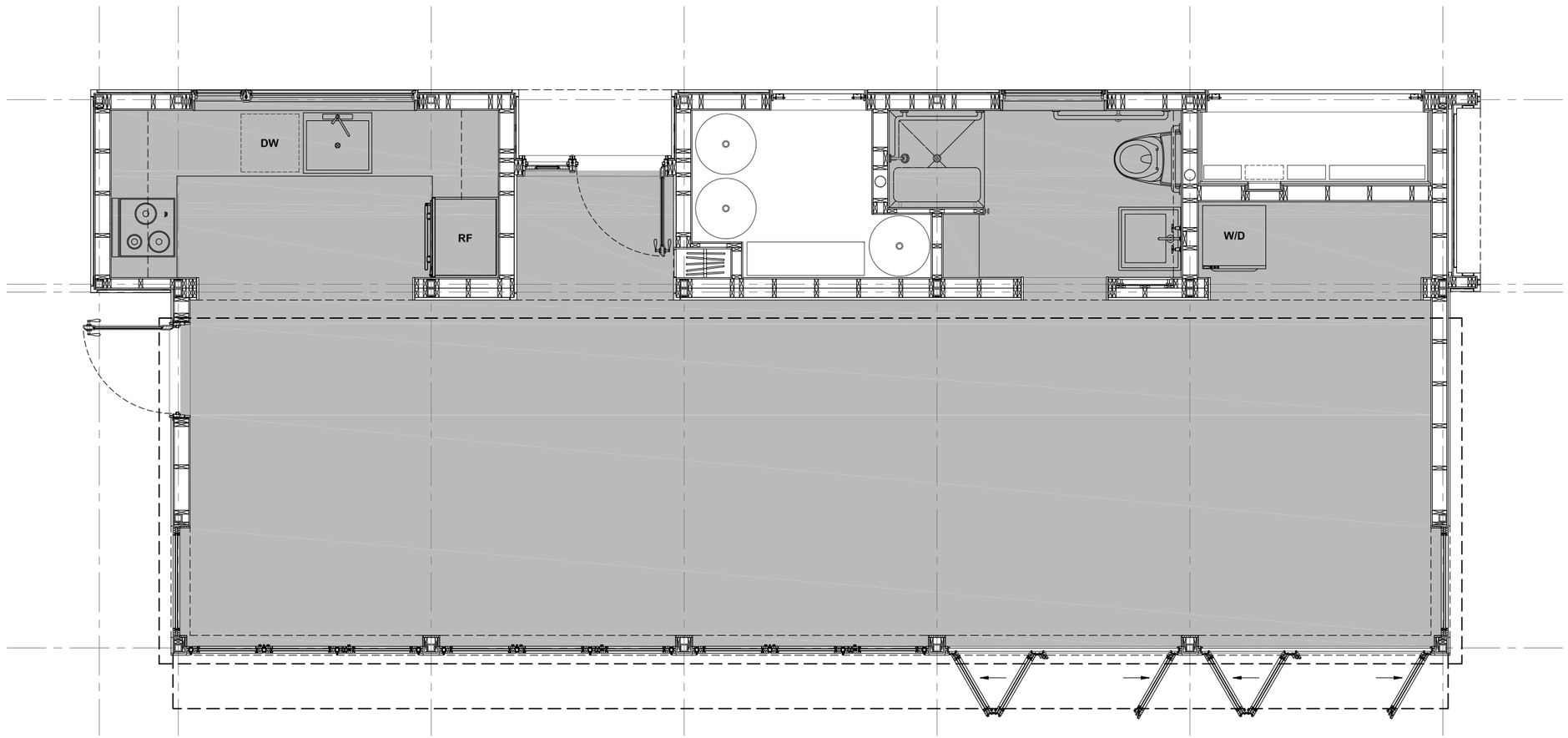

MINIMUM CONDITIONED AREA
SCALE 1/4" = 1'- 0"

0 2' 4' 8'

OPEN House

New York Institute of Technology
NORTHERN BLVD., OLD WESTBURY, NY 11568
TEL: 516-686-7659 FAX: 516-686-7921

Solar Decathlon 2007

CONSTRUCTION DOCUMENTS

TITLE: **MINIMUM CONDITIONED AREA**

Scale: 1/4" = 1' - 0"

Date: August 7th, 2007

Drawn By: MM

Checked By: MM

REVISIONS

No.	Date:	Description:
1	06.13.06	Design Development Drawings
2	03.06.07	Construction Drawings Rev. 1
3	08.07.07	Construction Drawings Rev. 2

DRAWING:

A 1.3

SHEET: 11 of 66

NOTES:

THE FOOTPRINT REPRESENTED BY THE SHADED AREA IS CALCULATED TO BE APROX. 782 SF, WHICH IS IN COMPLIANCE WITH SECTION 11.3 OF THE RULES AND REGULATIONS.

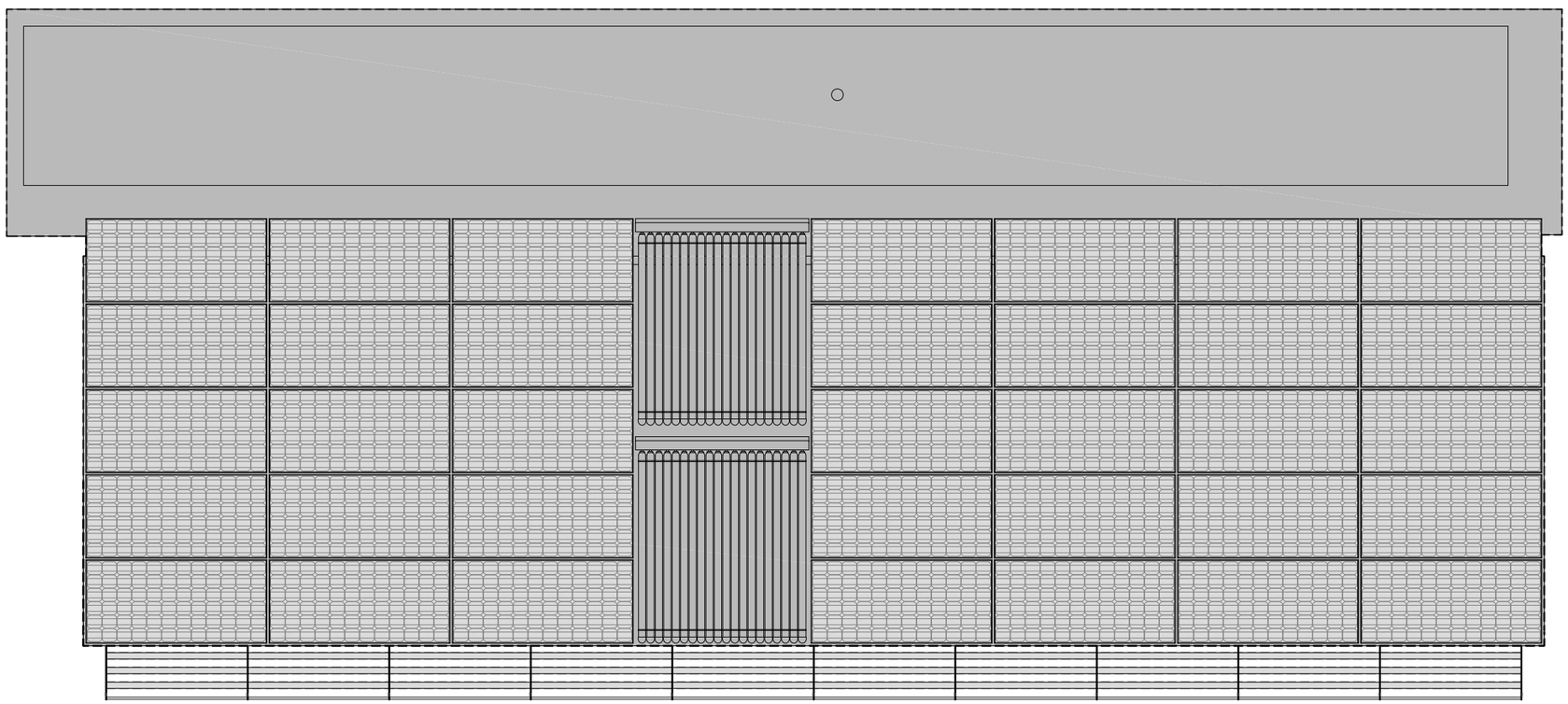

MAXIMUM ALLOWABLE FOOTPRINT

SCALE 1/4" = 1'- 0"

0 2' 4' 8'

OPEN House

New York Institute of Technology

NORTHERN BLVD., OLD WESTBURY, NY 11568

TEL: 516-686-7659 FAX: 516-686-7921

Solar Decathlon 2007

CONSTRUCTION DOCUMENTS

TITLE: MAXIMUM ALLOWABLE FOOTPRINT

Scale: 1/4" = 1' - 0"

Date: August 7th, 2007

Drawn By: MM

Checked By: MM

REVISIONS

No.	Date:	Description:
1	06.13.06	Design Development Drawings
2	03.06.07	Construction Drawings Rev. 1
3	08.07.07	Construction Drawings Rev. 2

DRAWING:

A 1.4

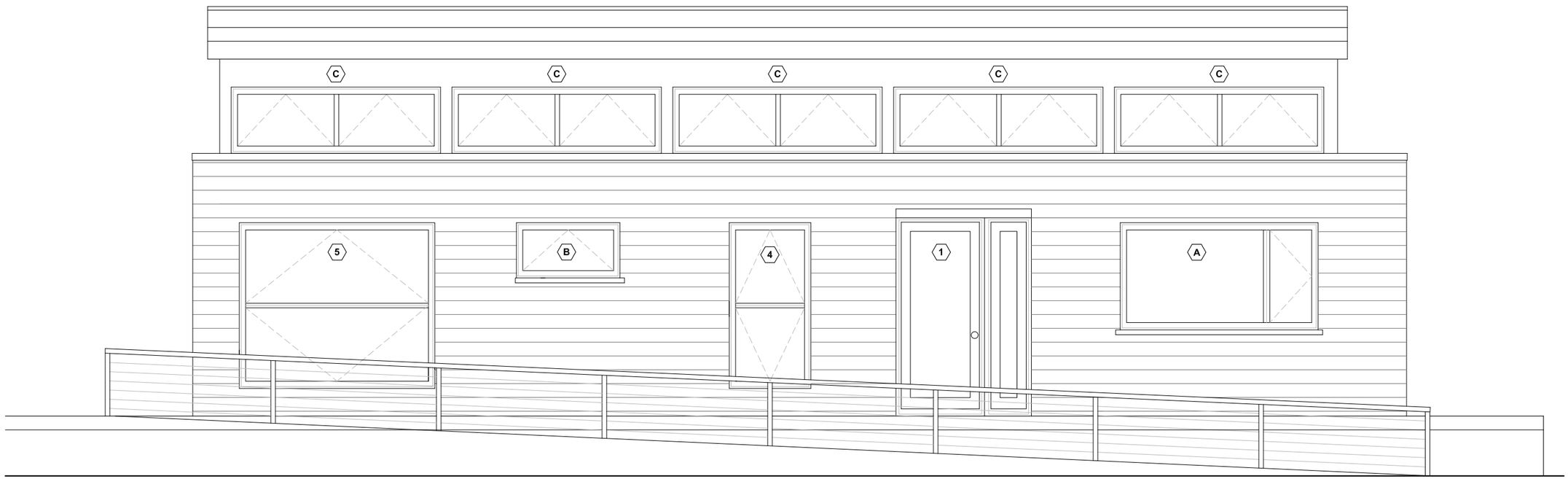

NORTH ELEVATION
SCALE 1/4" = 1'- 0"

0 2' 4' 8'

OPEN House

New York Institute of Technology
NORTHERN BLVD., OLD WESTBURY, NY 11568
TEL: 516-686-7659 FAX: 516-686-7921

Solar Decathlon 2007

CONSTRUCTION DOCUMENTS

TITLE: NORTH ELEVATION

Scale: 1/4" = 1' - 0"

Date: August 7th, 2007

Drawn By: AC

Checked By: MM

REVISIONS

No.	Date:	Description:
1	06.13.06	Design Development Drawings
2	03.06.07	Construction Drawings Rev. 1
3	08.07.07	Construction Drawings Rev. 2

DRAWING:

A 2.1

SHEET: 13 of 66

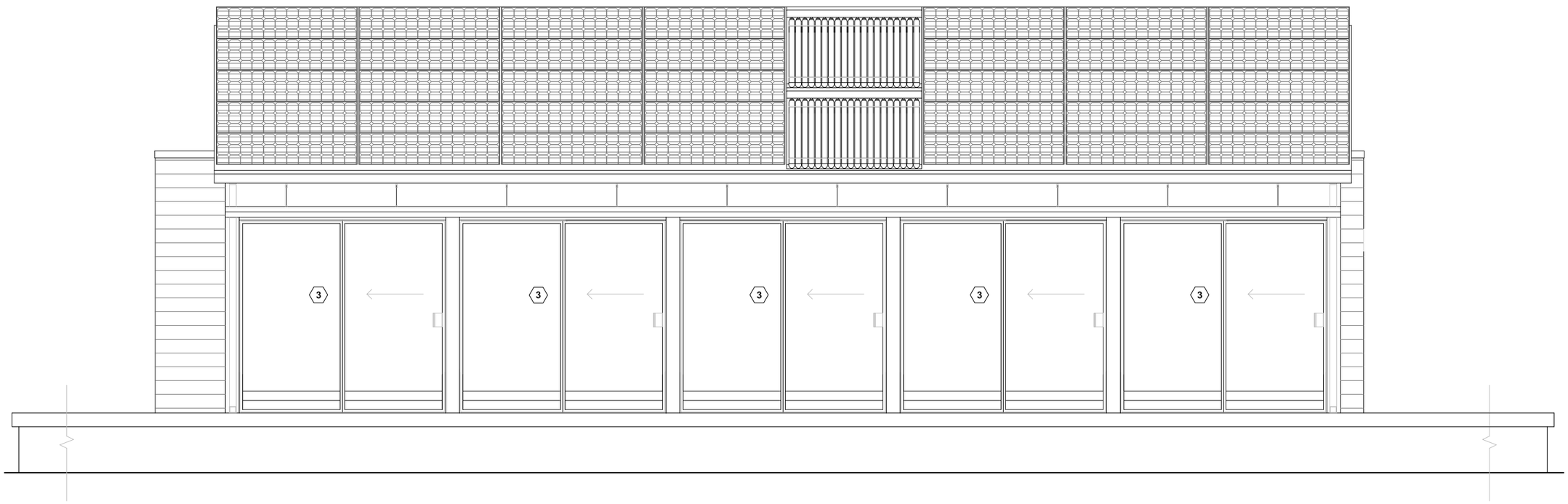

SOUTH ELEVATION
SCALE 1/4" = 1'- 0"

0 2' 4' 8'

OPEN House

New York Institute of Technology
NORTHERN BLVD., OLD WESTBURY, NY 11568
TEL: 516-686-7659 FAX: 516-686-7921

Solar Decathlon 2007

CONSTRUCTION DOCUMENTS

TITLE: SOUTH ELEVATION

Scale: 1/4" = 1' - 0"

Date: August 7th, 2007

Drawn By: AC

Checked By: MM

REVISIONS

No.	Date:	Description:
1	06.13.06	Design Development Drawings
2	03.06.07	Construction Drawings Rev. 1
3	08.07.07	Construction Drawings Rev. 2

DRAWING:

A 2.2

SHEET: 14 of 66

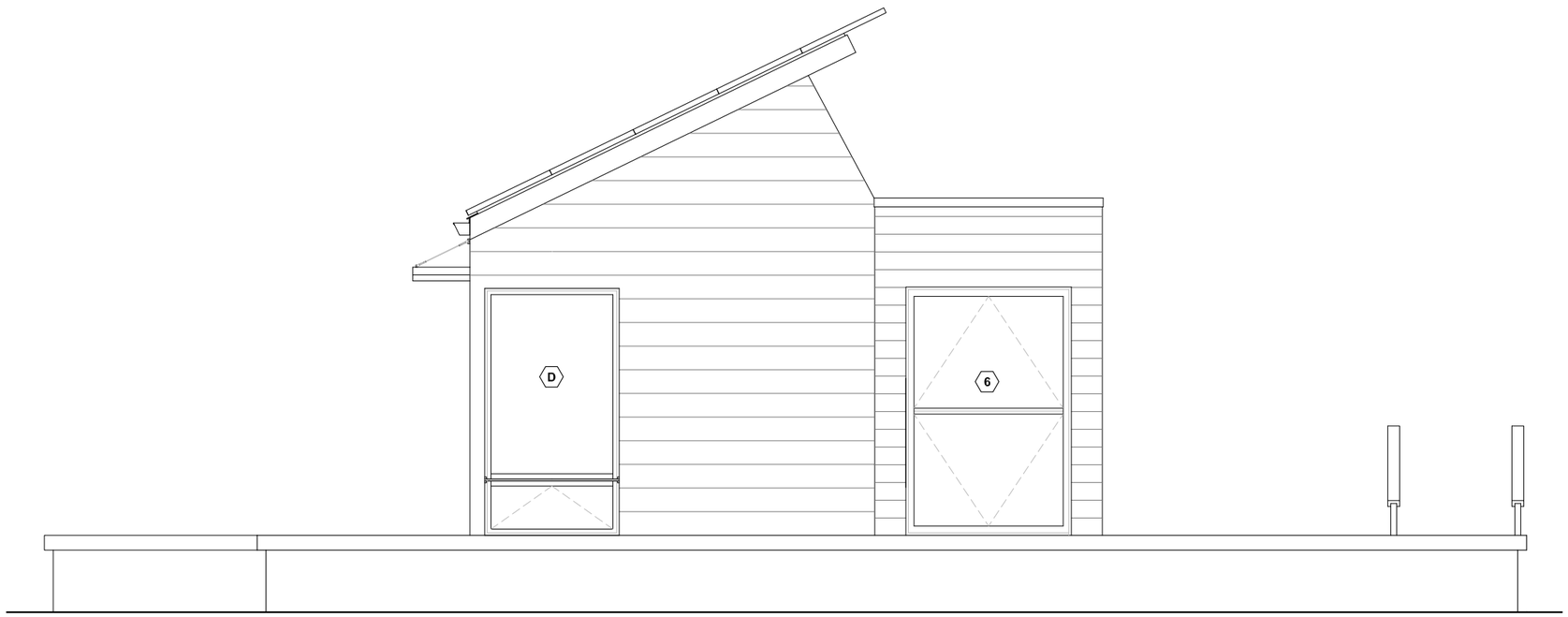

EAST ELEVATION
SCALE 1/4" = 1'- 0"

0 2' 4' 8'

OPEN House

New York Institute of Technology
NORTHERN BLVD., OLD WESTBURY, NY 11568
TEL: 516-686-7659 FAX: 516-686-7921

Solar Decathlon 2007

CONSTRUCTION DOCUMENTS

TITLE: **EAST ELEVATION**

REVISIONS

No.	Date:	Description:
1	06.13.06	Design Development Drawings
2	03.06.07	Construction Drawings Rev. 1
3	08.07.07	Construction Drawings Rev. 2

Scale: 1/4" = 1' - 0"
Date: August 7th, 2007
Drawn By: AC
Checked By: MM

DRAWING:

A 2.3

SHEET: 15 of 66

WEST ELEVATION
SCALE 1/4" = 1'- 0"

0 2' 4' 8'

OPEN House

New York Institute of Technology
NORTHERN BLVD., OLD WESTBURY, NY 11568
TEL: 516-686-7659 FAX: 516-686-7921

Solar Decathlon 2007

CONSTRUCTION DOCUMENTS

TITLE: **WEST ELEVATION**

Scale: 1/4" = 1' - 0"

Date: August 7th, 2007

Drawn By: AC

Checked By: MM

REVISIONS

No.	Date:	Description:
1	06.13.06	Design Development Drawings
2	03.06.07	Construction Drawings Rev. 1
3	08.07.07	Construction Drawings Rev. 2

DRAWING:

A 2.4

SHEET: 16 of 66

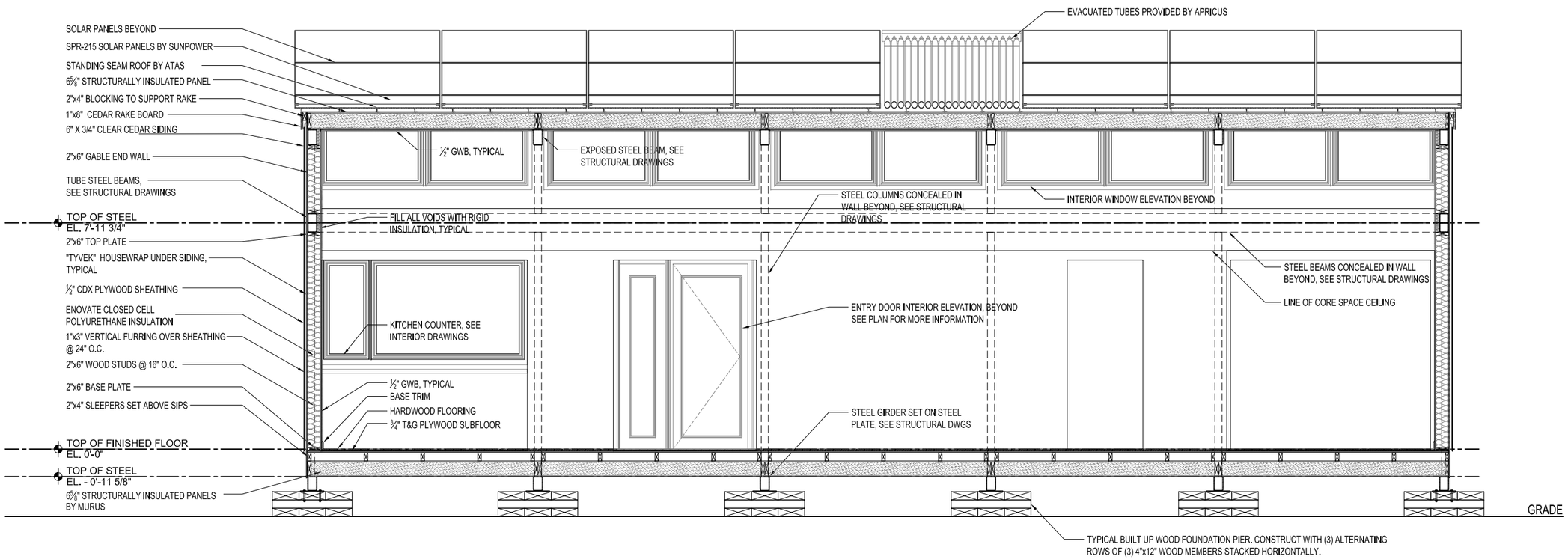

LONGITUDINAL SECTION THROUGH OPEN SPACE

SCALE 1/4" = 1'- 0"

0 2' 4' 8'

OPENHouse

New York Institute of Technology
NORTHERN BLVD., OLD WESTBURY, NY 11568
TEL: 516-686-7659 FAX: 516-686-7921

Solar Decathlon 2007

CONSTRUCTION DOCUMENTS

TITLE: LONGITUDINAL SECTION THROUGH OPEN SPACE

Scale: 1/4" = 1' - 0"

Date: August 7th, 2007

Drawn By: TM

Checked By: MM

REVISIONS

No.	Date:	Description:
1	06.13.06	Design Development Drawings
2	03.06.07	Construction Drawings Rev. 1
3	08.07.07	Construction Drawings Rev. 2

DRAWING:

A 3.1

SHEET: 17 of 66

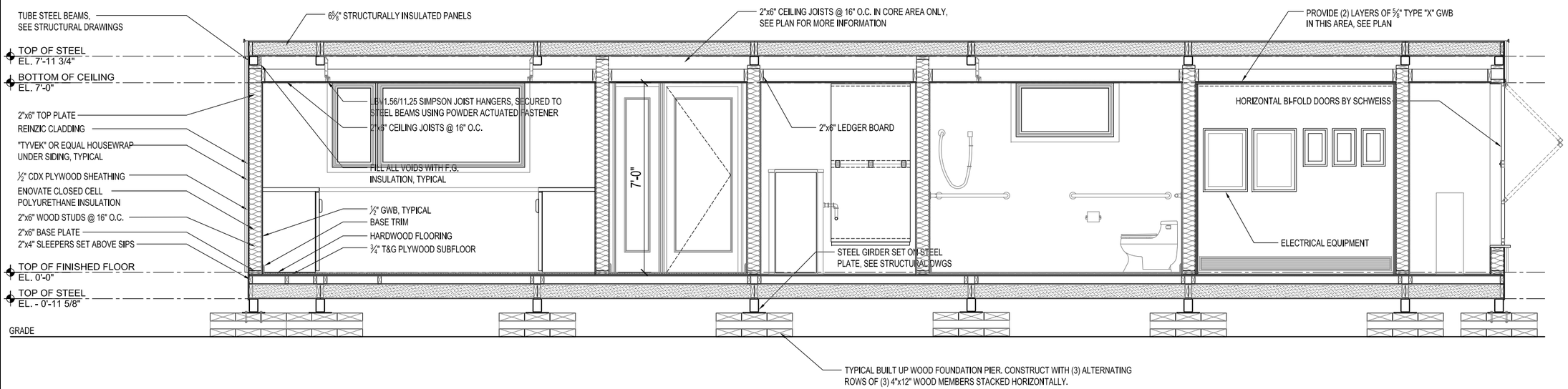

LONGITUDINAL SECTION THROUGH CORE
SCALE 1/4" = 1'- 0"

0 2' 4' 8'

OPEN House

New York Institute of Technology
NORTHERN BLVD., OLD WESTBURY, NY 11568
TEL: 516-686-7659 FAX: 516-686-7921

Solar Decathlon 2007

CONSTRUCTION DOCUMENTS

TITLE: **LONGITUDINAL SECTION THROUGH CORE**

Scale: 1/4" = 1' - 0"

Date: August 7th, 2007

Drawn By: TM

Checked By: MM

REVISIONS

No.	Date:	Description:
1	06.13.06	Design Development Drawings
2	03.06.07	Construction Drawings Rev. 1
3	08.07.07	Construction Drawings Rev. 2

DRAWING:

A 3.2

SHEET: 18 of 66

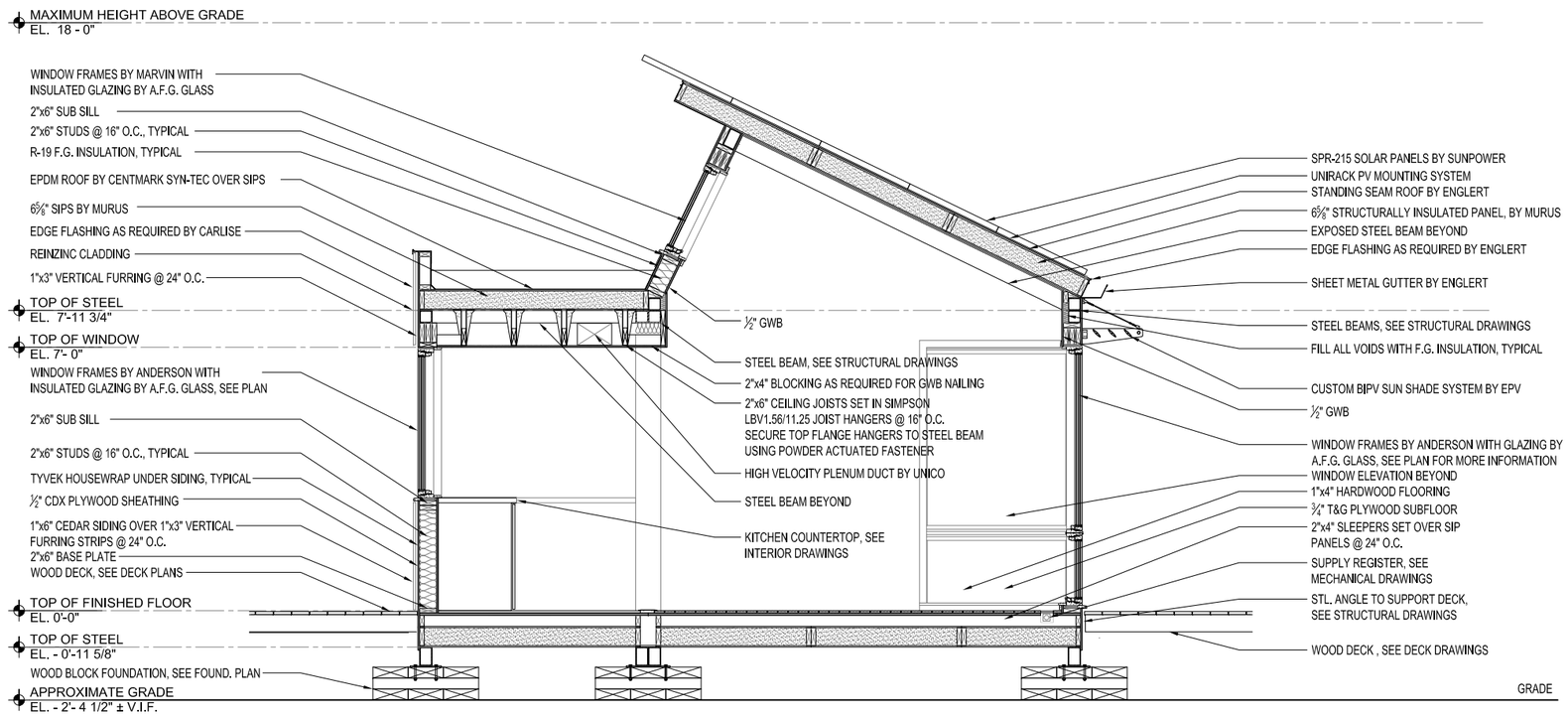

TRANSVERSE SECTION THROUGH KITCHEN

SCALE 1/4" = 1'- 0"

0 2' 4' 8'

OPENHouse

New York Institute of Technology

NORTHERN BLVD., OLD WESTBURY, NY 11568
TEL: 516-686-7659 FAX: 516-686-7921

Solar Decathlon 2007

CONSTRUCTION DOCUMENTS

TITLE: **TRANSVERSE SECTION THROUGH KITCHEN**

Scale: 1/4" = 1' - 0"

Date: August 7th, 2007

Drawn By: MM

Checked By: MM

REVISIONS

No.	Date:	Description:
1	06.13.06	Design Development Drawings
2	03.06.07	Construction Drawings Rev. 1
3	08.07.07	Construction Drawings Rev. 2

DRAWING:

A 3.3

SHEET: 19 of 66

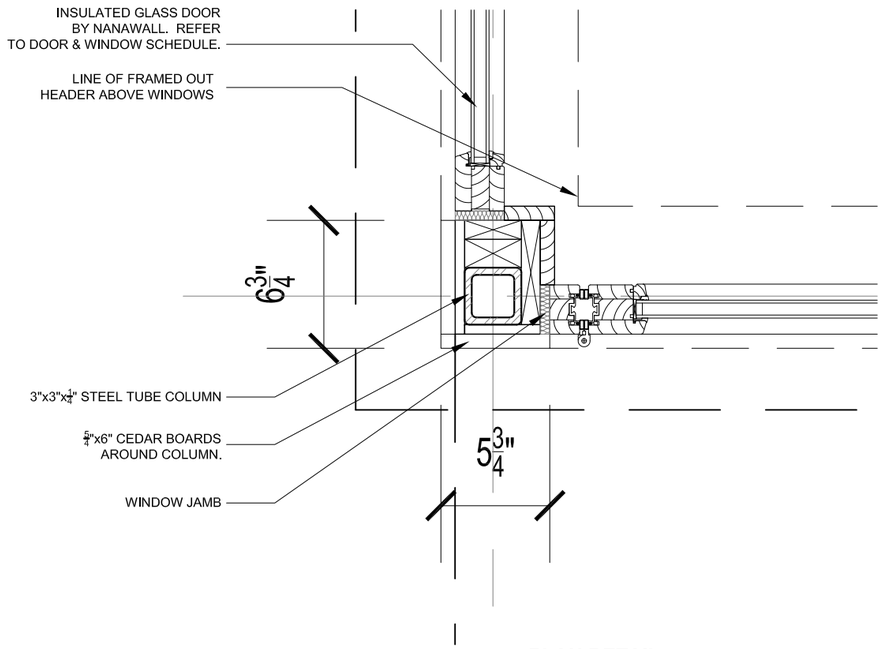

1 PLAN DETAIL: OPEN SPACE
SCALE 1-1/2" = 1'- 0"

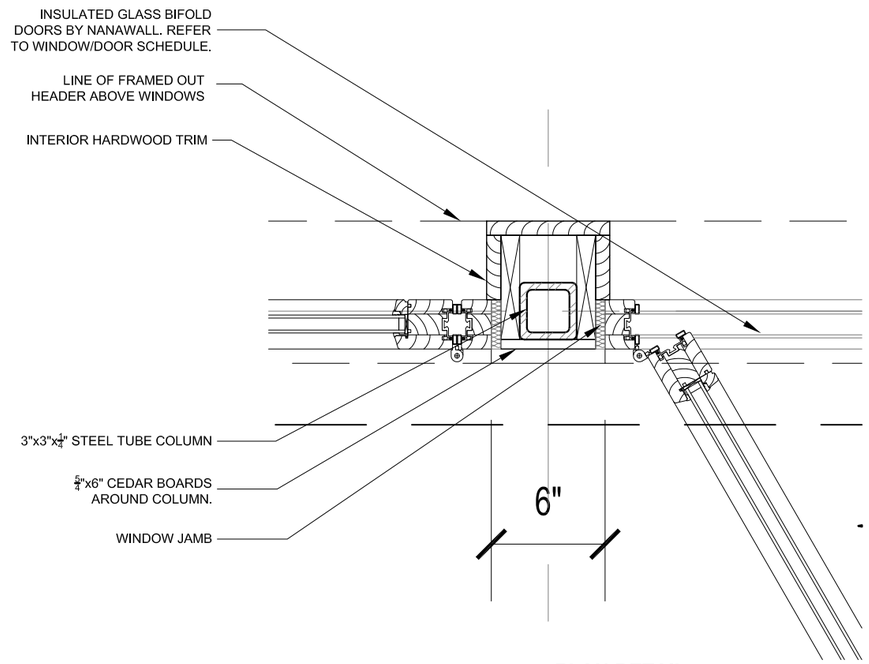

2 PLAN DETAIL: OPEN SPACE
SCALE 1-1/2" = 1'- 0"

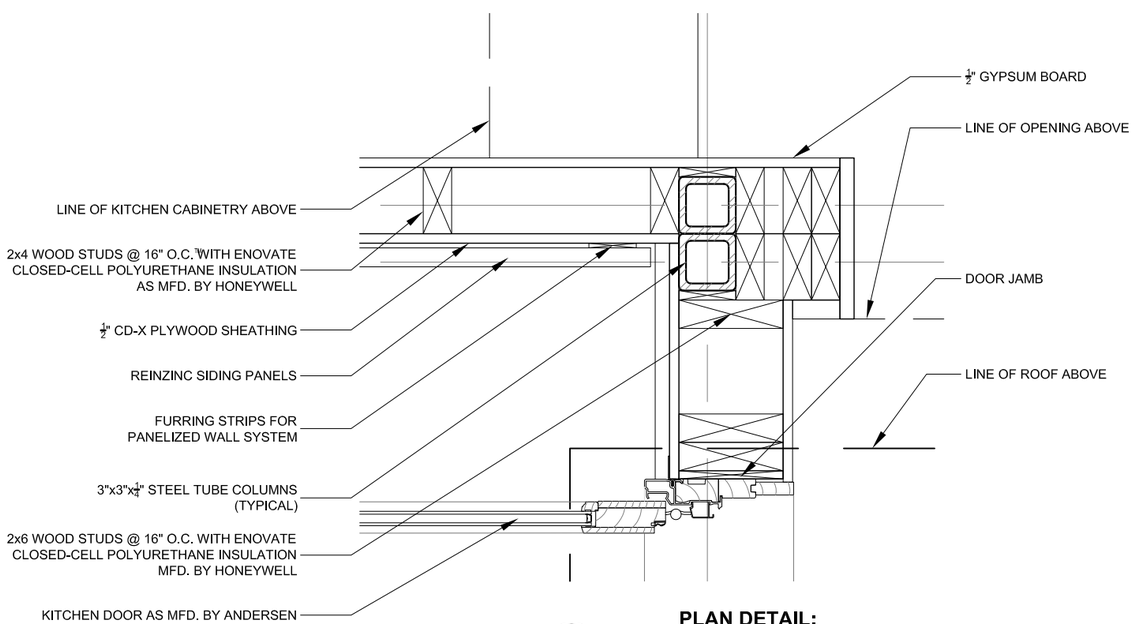

3 PLAN DETAIL: OPEN SPACE/CORE
SCALE 1-1/2" = 1'- 0"

OPENHouse

New York Institute of Technology
NORTHERN BLVD., OLD WESTBURY, NY 11568
TEL: 516-686-7659 FAX: 516-686-7921

Solar Decathlon 2007

CONSTRUCTION DOCUMENTS

TITLE: **PLAN DETAILS**

Scale: 1 1/2" = 1' - 0"

Date: August 7th, 2007

Drawn By: MAF

Checked By: MM

REVISIONS

No.	Date:	Description:
1	06.13.06	Design Development Drawings
2	03.06.07	Construction Drawings Rev. 1
3	08.07.07	Construction Drawings Rev. 2

DRAWING:

A4.0

SHEET: 20 of 66

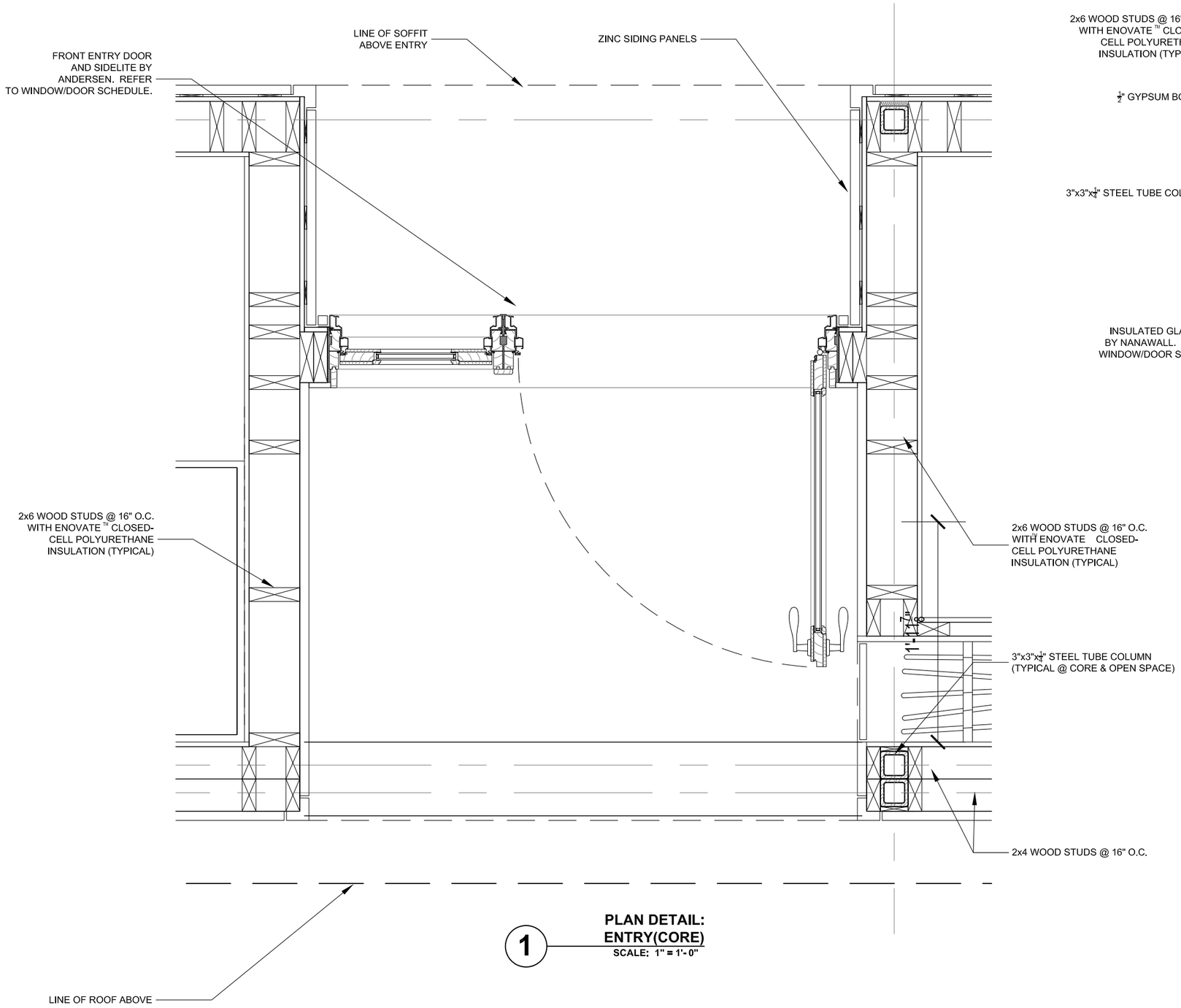

1 PLAN DETAIL: ENTRY(CORE)
SCALE: 1" = 1'- 0"

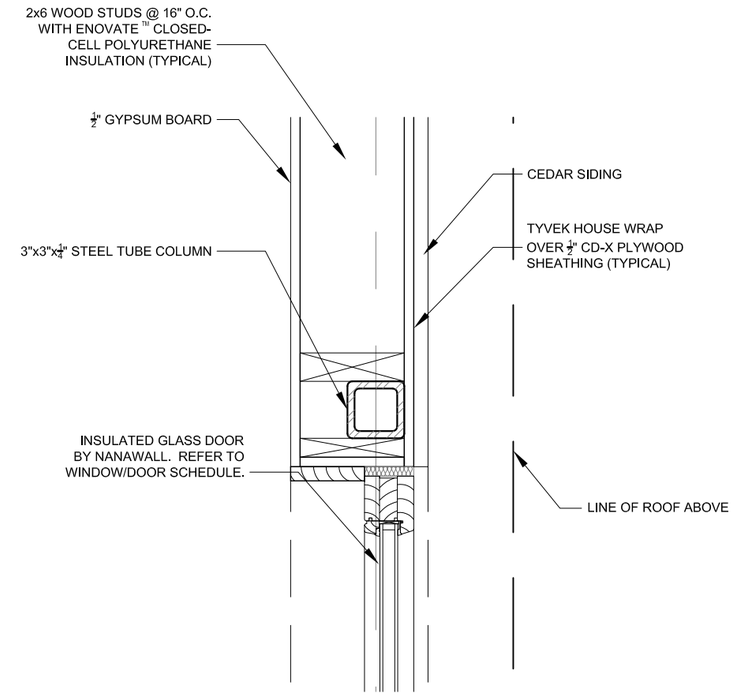

2 PLAN DETAIL: OPEN SPACE
SCALE 1-1/2" = 1'- 0"

OPEN House

New York Institute of Technology
NORTHERN BLVD., OLD WESTBURY, NY 11568
TEL: 516-686-7659 FAX: 516-686-7921

Solar Decathlon 2007

CONSTRUCTION DOCUMENTS

TITLE: PLAN DETAILS

Scale: 1 1/2" = 1' - 0"

Date: August 7th, 2007

Drawn By: MAF

Checked By: MM

REVISIONS

No.	Date:	Description:
1	06.13.06	Design Development Drawings
2	03.06.07	Construction Drawings Rev. 1
3	08.07.07	Construction Drawings Rev. 2

DRAWING:

A4.1

SHEET: 21 of 66

NOTE: TO BE DEVELOPED, SEE PLAN FOR DIMENTIONS

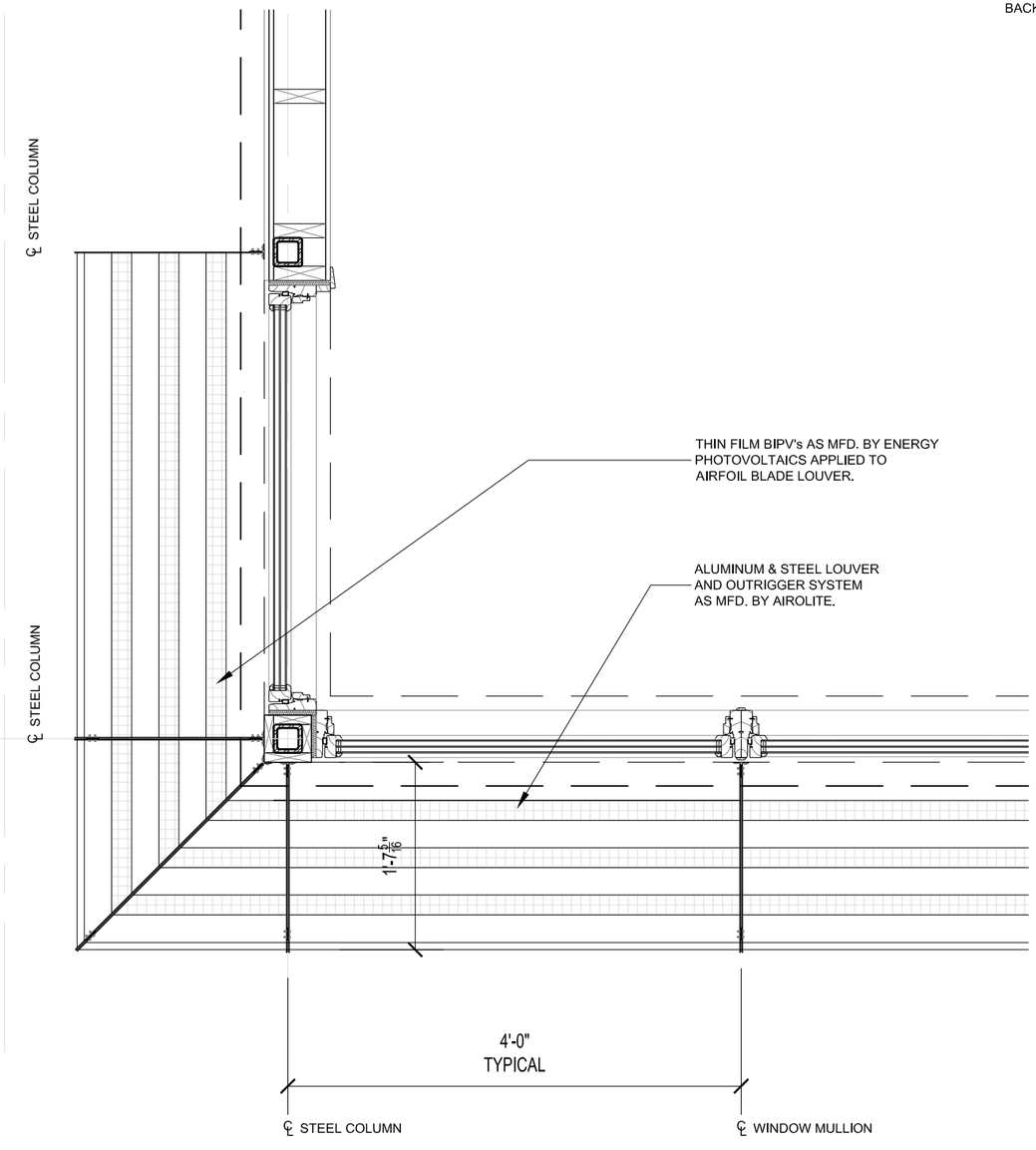

1 **PLAN DETAIL: BIPV OVERHANG**
SCALE: 1" = 1'- 0"

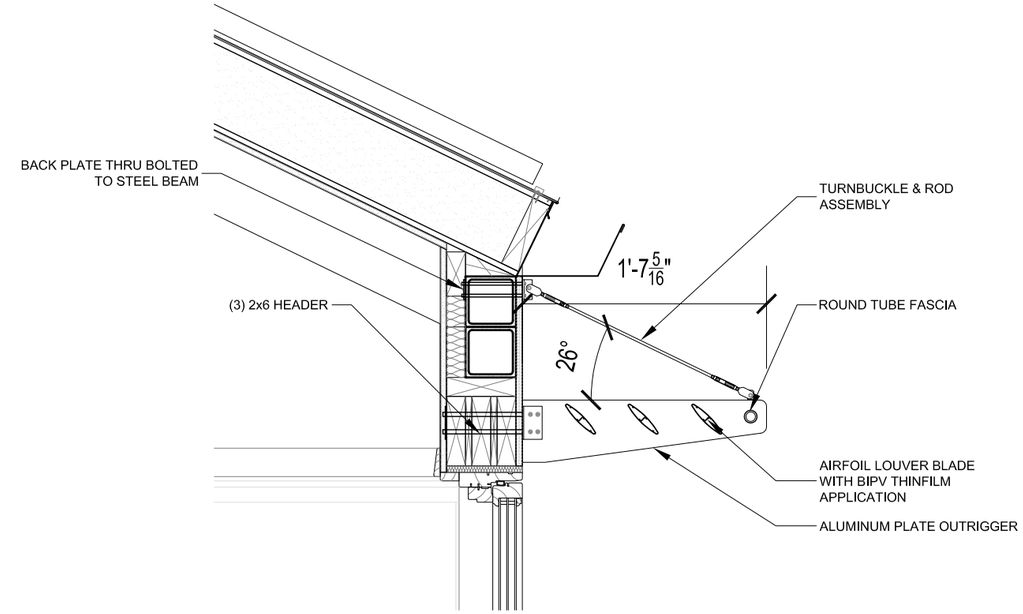

2 **DETAIL @ BIPV OVERHANG**
SCALE: n.t.s.

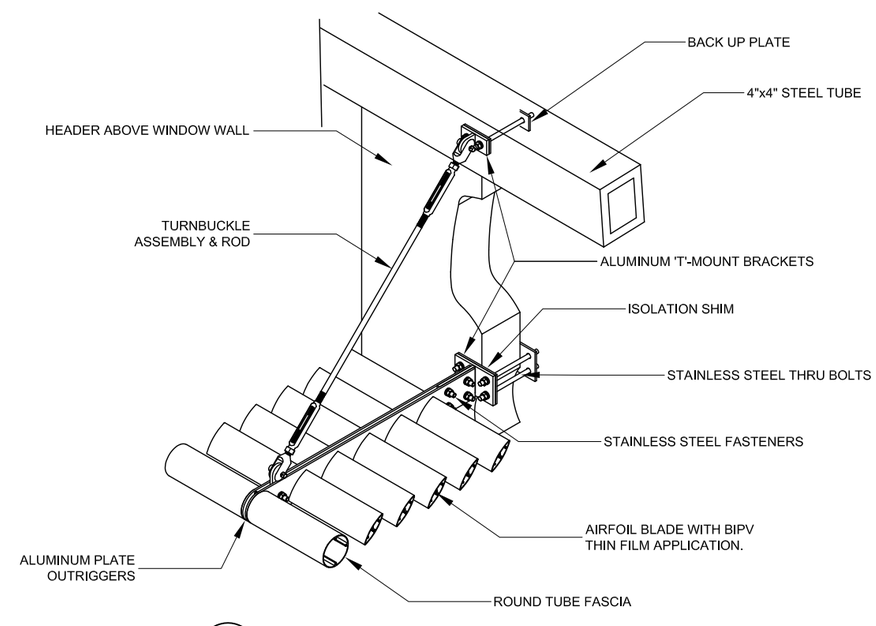

3 **TYPICAL MOUNTING DETAIL**
SCALE: n.t.s.

OPEN House

New York Institute of Technology
NORTHERN BLVD., OLD WESTBURY, NY 11568
TEL: 516-686-7659 FAX: 516-686-7921

Solar Decathlon 2007

CONSTRUCTION DOCUMENTS

TITLE: **BIPV OVERHANG DETAILS**

Scale: **AS NOTED**

Date: **August 7th, 2007**

Drawn By: MAF

Checked By: MM

REVISIONS

No.	Date:	Description:
1	06.13.06	Design Development Drawings
2	03.06.07	Construction Drawings Rev. 1
3	08.07.07	Construction Drawings Rev. 2

DRAWING:

A 4.2

SHEET: 22 of 66

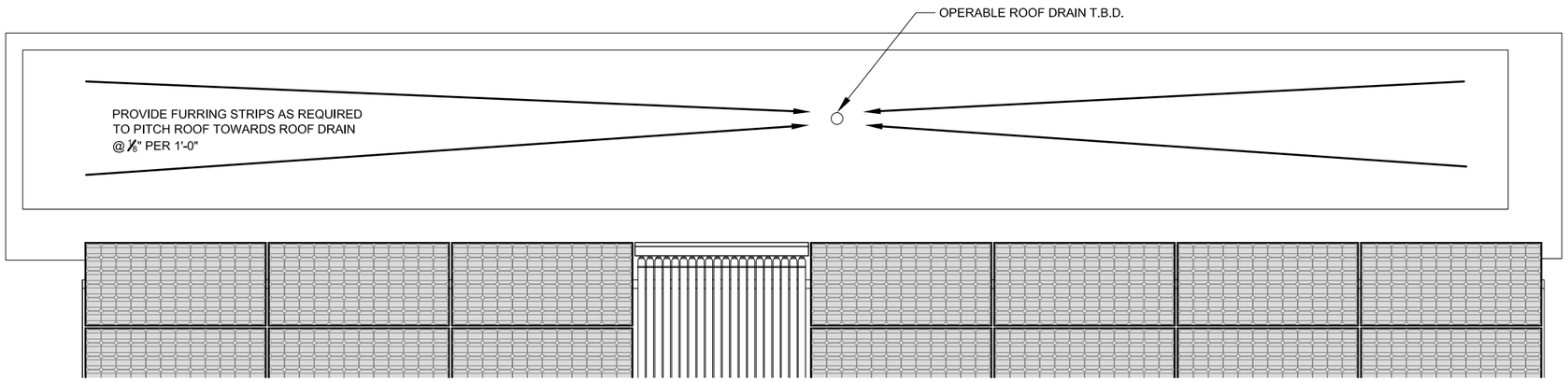

ROOF POND PLAN
SCALE 1/4" = 1'-0"

0 2' 4' 8'

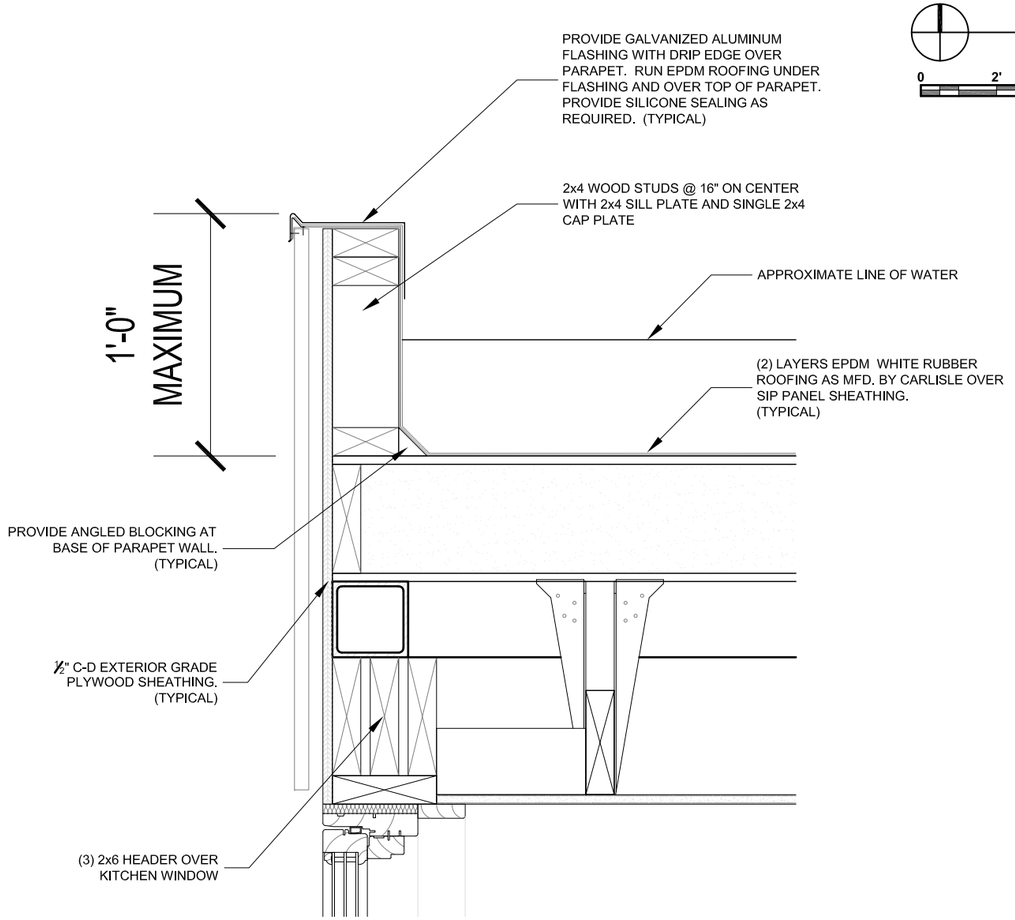

PARAPET DETAIL - CORE
SCALE 1-1/2" = 1'-0"

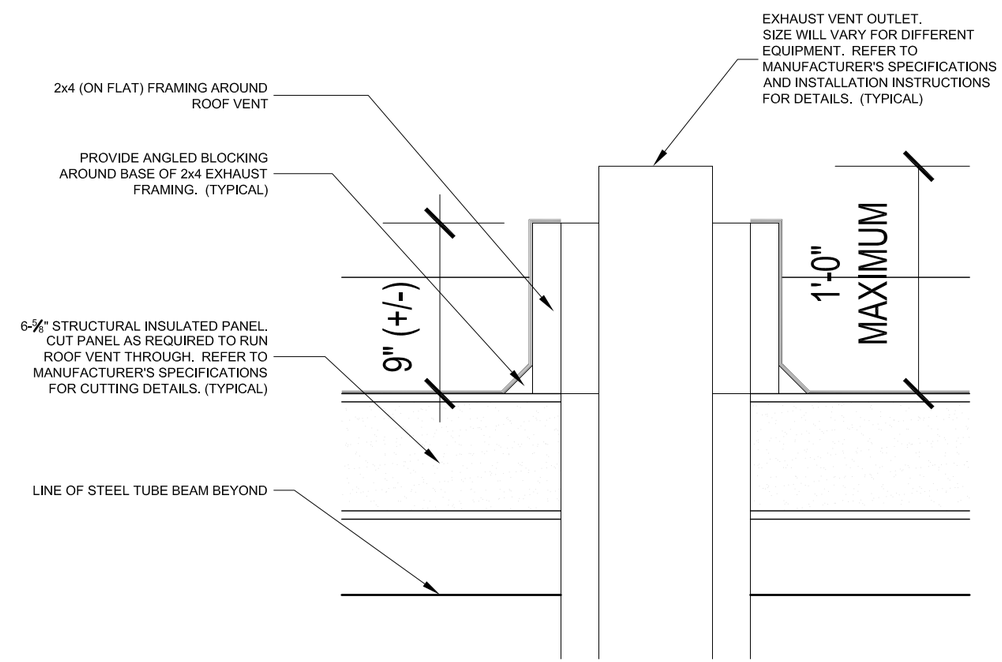

TYPICAL EXHAUST VENT DETAIL
SCALE 1-1/2" = 1'-0"

OPENHouse

New York Institute of Technology
NORTHERN BLVD., OLD WESTBURY, NY 11568
TEL: 516-686-7659 FAX: 516-686-7921

Solar Decathlon 2007

CONSTRUCTION DOCUMENTS

TITLE: **ROOF POND DETAILS**

Scale: AS NOTED

Date: August 7th, 2007

Drawn By: MAF

Checked By: MM

REVISIONS

No.	Date:	Description:
1	06.13.06	Design Development Drawings
2	03.06.07	Construction Drawings Rev. 1
3	08.07.07	Construction Drawings Rev. 2

DRAWING:

A4.3

FINISH SCHEDULE

SPACE / ROOM	FLOOR	WALLS	CEILING	BASE	DOOR & TRIM	CABINETRY	COUNTERS	REMARKS
ENTRANCE	W-R	PL	P	P	P	---	---	SUBMIT SAMPLES FOR ARCHITECT'S APPROVAL
KITCHEN	T-RG	P	P	P	P	W-B	C	SUBMIT SAMPLES FOR ARCHITECT'S APPROVAL
BATHROOM	T-RS	P & T-MG	P	P	P	W-B	---	SUBMIT SAMPLES FOR ARCHITECT'S APPROVAL
LIVING/DINING/ OFFICE/BEDROOM	W-HW	PL	P	P	P	---	---	SUBMIT SAMPLES FOR ARCHITECT'S APPROVAL

NOTES:

1) ALL MATERIALS SUBJECT TO REVISION

FINISH LEGEND

ITEM	DESCRIPTION	MANUFACTURER/MODEL #	RATING	REMARKS
P	PAINT	BENJAMIN MOORE, ECO SPEC INTERIOR LATEX, COLOR T.B.D.	LOW VOC & SOLVENTS	SUBMIT SAMPLES FOR ARCHITECT'S APPROVAL
WD	WOOD	PINE (UNLESS OTHERWISE SPECIFIED), PAINT GRADE	---	SUBMIT SAMPLES FOR ARCHITECT'S APPROVAL
WC	WALLCOVERING	---	---	SUBMIT SAMPLES FOR ARCHITECT'S APPROVAL
T-RG	RECYCLED GLASS TILE	ENVIROGLAS, ENVIROPLANK TERRAZZO TILE, COLOR T.B.D.	---	SUBMIT SAMPLES FOR ARCHITECT'S APPROVAL
T-RS	RECYCLED PORCELAIN STONE TILE	CROSSVILLE, ECOCYCLE PORCELAIN STONE, COLOR T.B.D.	---	SUBMIT SAMPLES FOR ARCHITECT'S APPROVAL
T-MG	MESH MOUNTED GLASS TILE	INTERSTYLE RIVER CRYSTALS, COLOR T.B.D.	---	SUBMIT SAMPLES FOR ARCHITECT'S APPROVAL
W-HW	SUSTAINABLE HARDWOOD	CHERRY HARDWOOD FLOORING, MANUFACTURER AND FINISH T.B.D.	---	SUBMIT SAMPLES FOR ARCHITECT'S APPROVAL
W-B	BAMBOO	ALTERECO BAMBOO CABINETRY, STYLE T.B.D.	---	SUBMIT SAMPLES FOR ARCHITECT'S APPROVAL
C	PAPER BASED SHEET COMPOSITE	RICHLITE, PAPER BASED COUNTER, COLOR AND STYLE T.B.D.	---	SUBMIT SAMPLES FOR ARCHITECT'S APPROVAL
PL	SKIM COAT INTEGRALLY COLORED PLASTER	AMERICAN CLAY, EARTH PLASTER FINISH, STYLE AND COLOR T.B.D.	---	SUBMIT SAMPLES FOR ARCHITECT'S APPROVAL

OPEN House

New York Institute of Technology
NORTHERN BLVD., OLD WESTBURY, NY 11568
TEL: 516-686-7659 FAX: 516-686-7921

Solar Decathlon 2007

CONSTRUCTION DOCUMENTS

TITLE: FINISH SCHEDULE AND NOTES

Scale: NOT TO SCALE

Date: August 7th, 2007

Drawn By: MAF

Checked By: MM

REVISIONS

No.	Date:	Description:
1	06.13.06	Design Development Drawings
2	03.06.07	Construction Drawings Rev. 1
3	08.07.07	Construction Drawings Rev. 2

DRAWING:

A 5.0

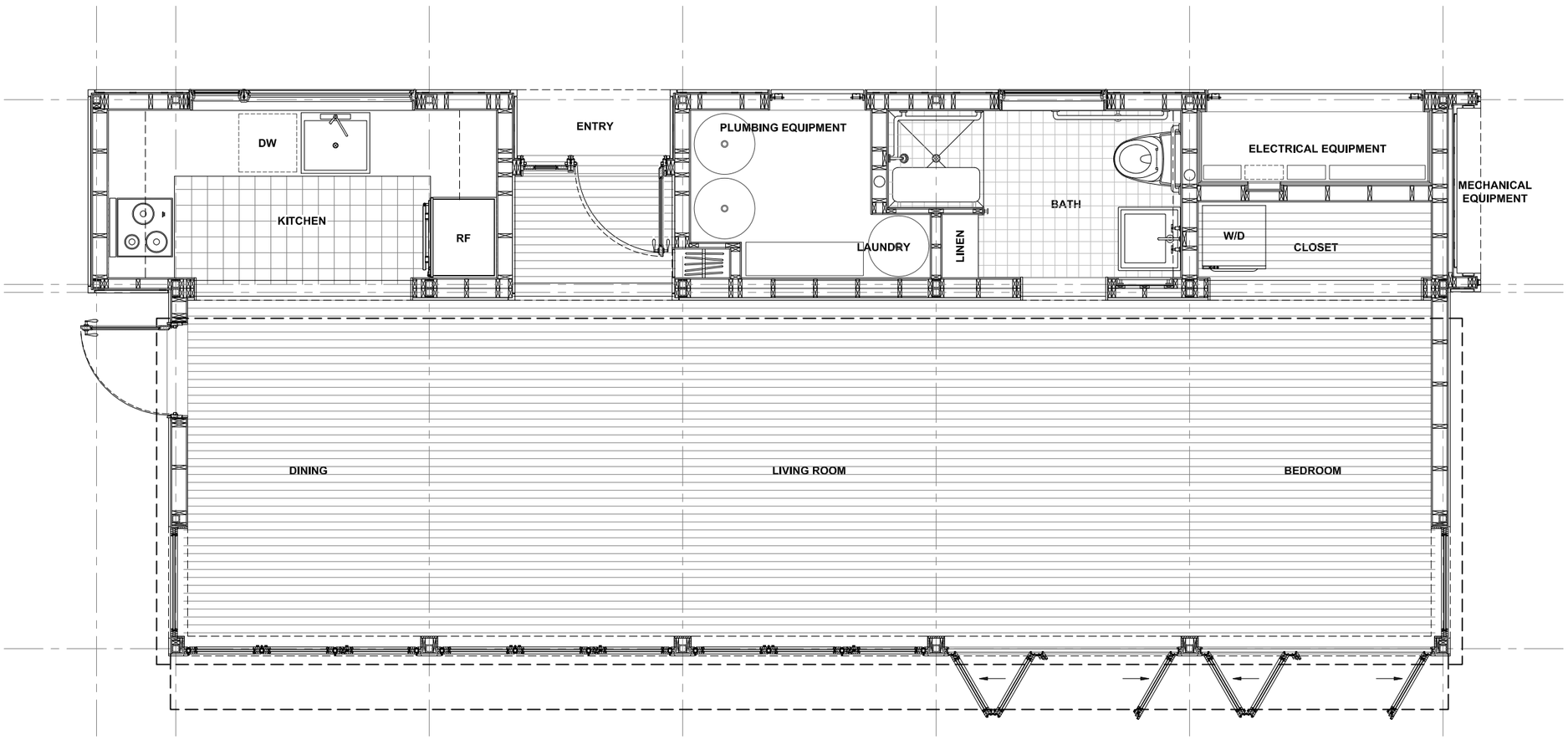

FINISH PLAN
SCALE 1/4" = 1'- 0"

0 2' 4' 8'

OPEN House

New York Institute of Technology
NORTHERN BLVD., OLD WESTBURY, NY 11568
TEL: 516-686-7659 FAX: 516-686-7921

Solar Decathlon 2007

CONSTRUCTION DOCUMENTS

TITLE: **FINISH PLAN**

Scale: 1/4" = 1' - 0"
Date: August 7th, 2007
Drawn By: MAF
Checked By: MM

REVISIONS

No.	Date:	Description:
1	06.13.06	Design Development Drawings
2	03.06.07	Construction Drawings Rev. 1
3	08.07.07	Construction Drawings Rev. 2

DRAWING:

A 5.1

SHEET: 25 of 66

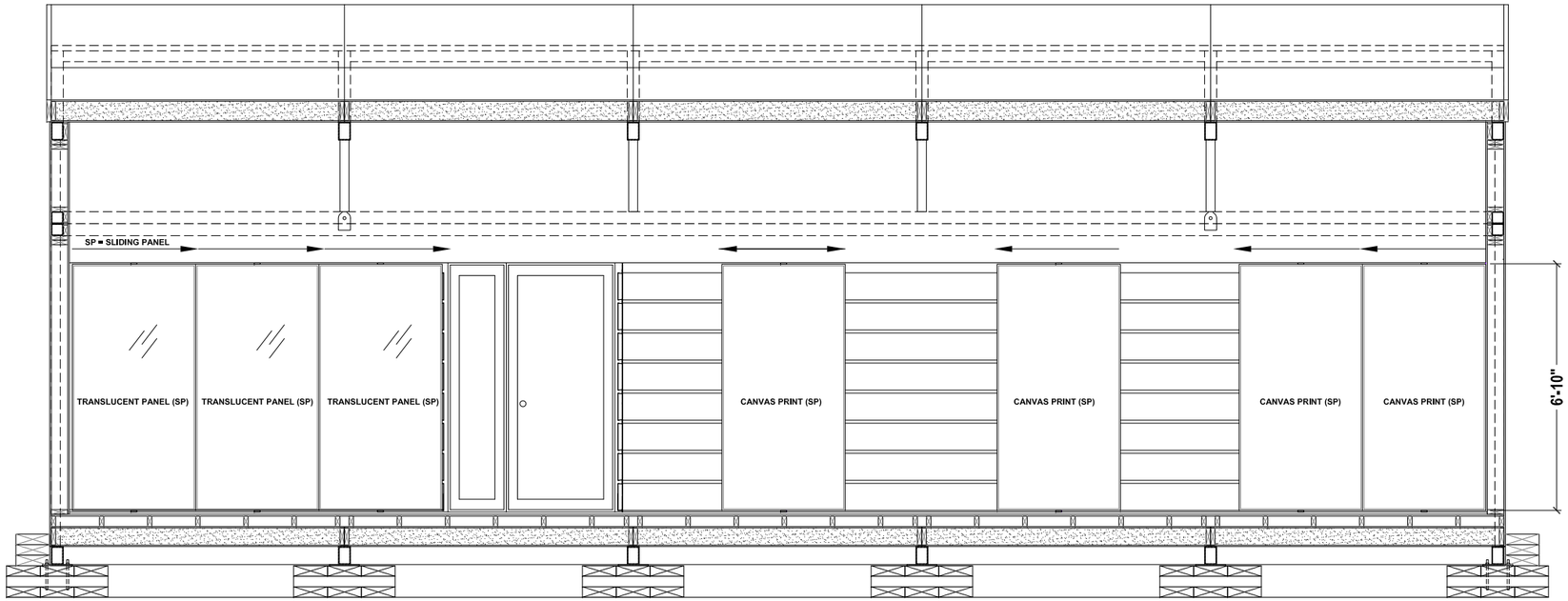

INTERIOR ELEVATION NORTH
SCALE 1/4" = 1'- 0"

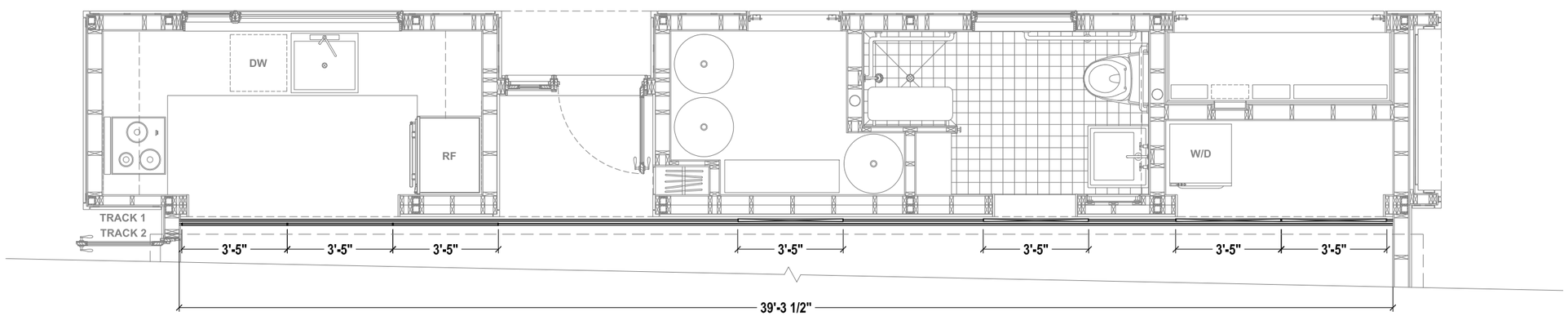

PLAN OF NORTH INTERIOR SHOWING SLIDING PANEL
SCALE 1/4" = 1'- 0"

0 2' 4' 8'

OPEN House

New York Institute of Technology
NORTHERN BLVD., OLD WESTBURY, NY 11568
TEL: 516-686-7659 FAX: 516-686-7921

Solar Decathlon 2007

CONSTRUCTION DOCUMENTS

TITLE: **SLIDING DOOR LAYOUT**

Scale: 1/4" = 1' - 0"
Date: August 7th, 2007
Drawn By: JS
Checked By: MM

REVISIONS

No.	Date:	Description:
1	06.13.06	Design Development Drawings
2	03.06.07	Construction Drawings Rev. 1
3	08.07.07	Construction Drawings Rev. 2

DRAWING:

A 5.2

SHEET: 26 of 66

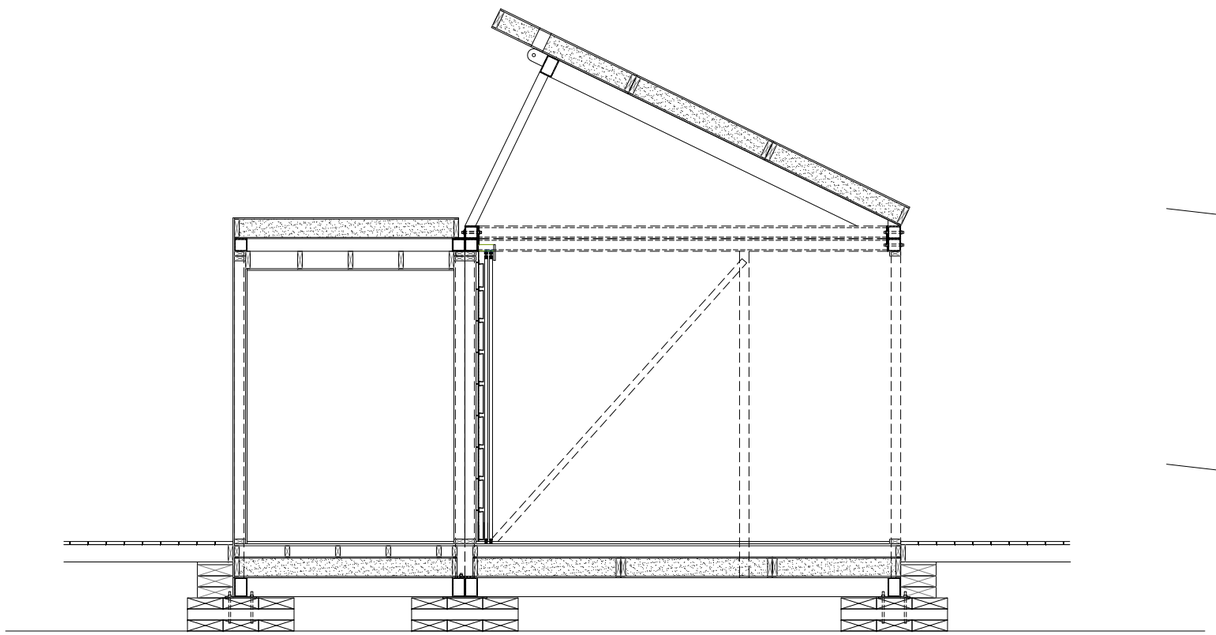

TRANSVERSAL SECTION SHOWING PANELS
SCALE 1/4" = 1'- 0"

0 2' 4' 8'

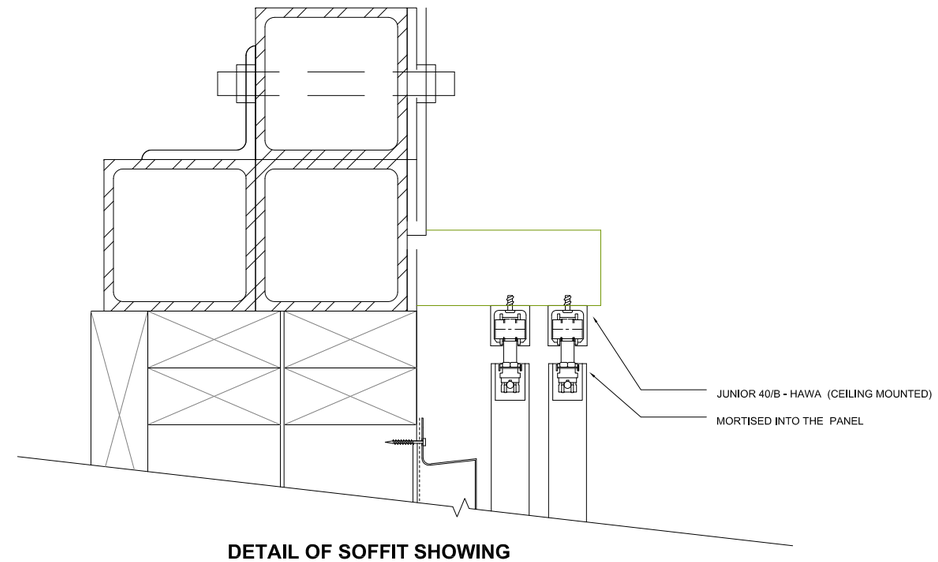

DETAIL OF SOFFIT SHOWING SLIDING PANELS FOR THE TOP HUNG SYSTEM
SCALE 3" = 1'- 0"

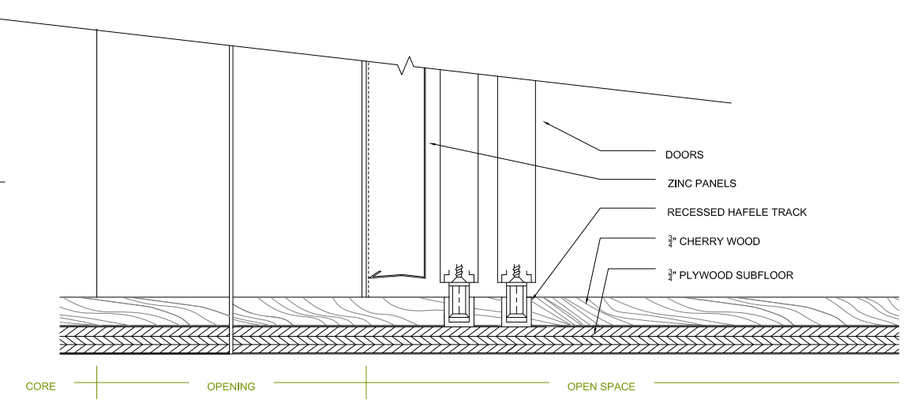

DETAIL AT FLOOR OF SLIDING PANELS FOR LOWER GUIDE CHANNEL
SCALE 3" = 1'- 0"

OPEN House

New York Institute of Technology
NORTHERN BLVD., OLD WESTBURY, NY 11568
TEL: 516-686-7659 FAX: 516-686-7921

Solar Decathlon 2007

CONSTRUCTION DOCUMENTS

TITLE: **SLIDING DOOR DETAILS**

Scale: AS NOTED

Date: August 7th, 2007

Drawn By: JS

Checked By: MM

REVISIONS

No.	Date:	Description:
1	06.13.06	Design Development Drawings
2	03.06.07	Construction Drawings Rev. 1
3	08.07.07	Construction Drawings Rev. 2

DRAWING:

A 5.3

SHEET: 27 of 66

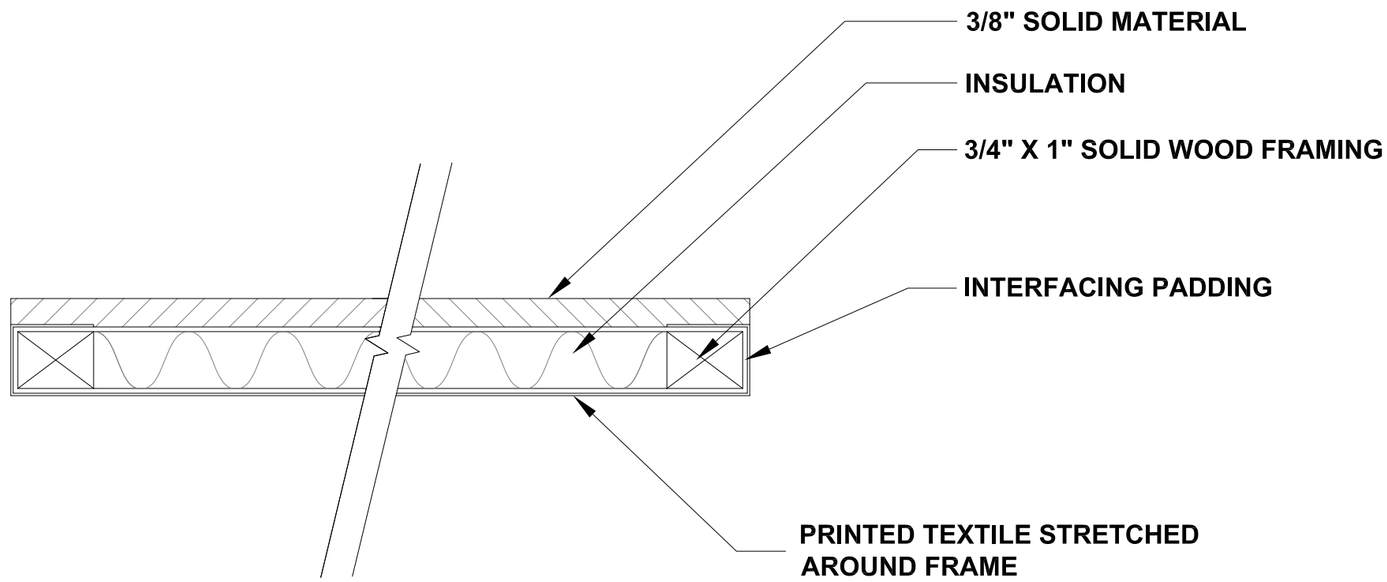

SECTION THROUH OPAQUE PANELS, (4) FOUR

SCALE 6" = 1'- 0"

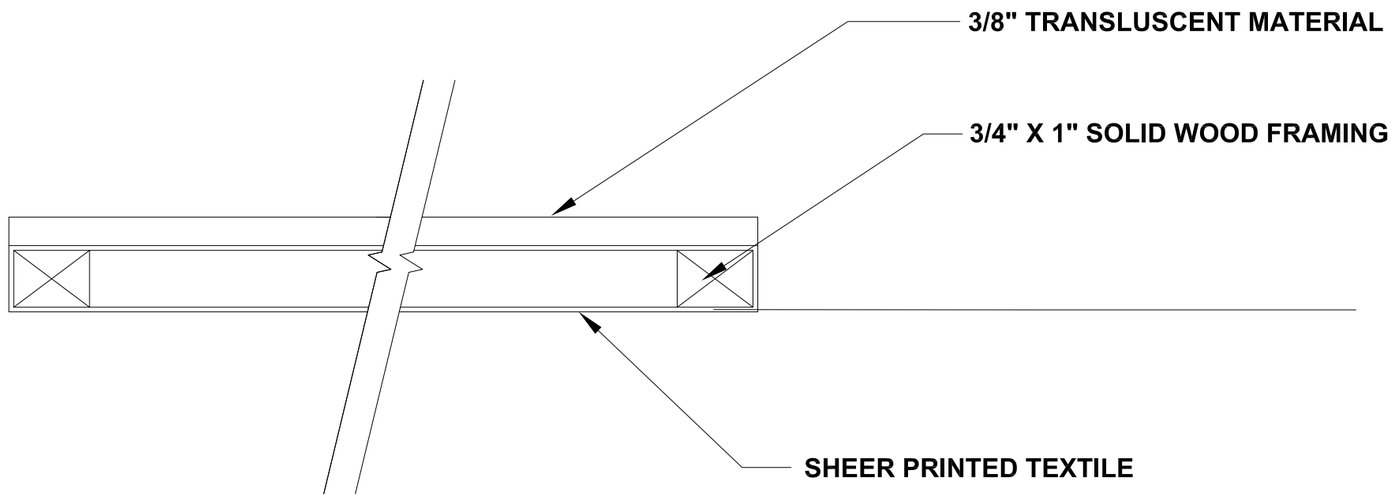

SECTION THROUGH TRANSPARENT PANELS, (3) THREE

SCALE 6" = 1'- 0"

OPEN House

New York Institute of Technology
NORTHERN BLVD., OLD WESTBURY, NY 11568
TEL: 516-686-7659 FAX: 516-686-7921

Solar Decathlon 2007

CONSTRUCTION DOCUMENTS

TITLE: **SLIDING DOOR DETAILS**

Scale: AS NOTED

Date: August 7th, 2007

Drawn By: JS

Checked By: MM

REVISIONS

No.	Date:	Description:
1	06.13.06	Design Development Drawings
2	03.06.07	Construction Drawings Rev. 1
3	08.07.07	Construction Drawings Rev. 2

DRAWING:

A 5.4

SHEET: 28 of 66

LIFE SAFETY & ACCESSIBILITY NOTES:

FIRE PROTECTION NOTES:

1. UNLESS OTHERWISE NOTED, FIRE EXTINGUISHERS SHALL HAVE A MINIMUM U.L. RATING OF 2A-10BC.

2. FIRE EXTINGUISHER UL CLASS 60 MARINE TYPE U.S.C.G. TYPE B-C SIZE II APP # 162.028 EX 1909 QUIK AID DRY CHEMICAL FIRE EXTINGUISHER GP 10F

NOTE: REFER TO WINDOW & DOOR SCHEDULE ON SHEET A1.0 FOR ALL GLAZING NOTES AND DETAILS.

ACCESSIBILITY NOTES:
(AS PER ICC/ANSI 117.1-2003)

1. MAXIMUM EFFORT TO OPEN DOORS SHALL NOT EXCEED 8.5 POUNDS FOR EXTERIOR DOORS AND 5 POUNDS FOR INTERIOR DOORS.

2. REQUIRED EXIT DOORWAYS SHALL HAVE A MINIMUM 32" CLEAR OPENING WITH THE DOOR AT 90° TO THE CLOSED POSITION.

3. MAXIMUM HEIGHT OF THRESHOLD TO BE ½". MAXIMUM VERTICAL CHANGE AT EDGE IS ¼" WITH A MAX BEVEL OF 45°.

NOTE: SEE TOUR PLAN SUBMISSION FOR MORE DETAILS.

ADA REQUIREMENTS:

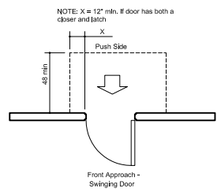

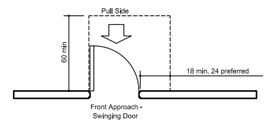

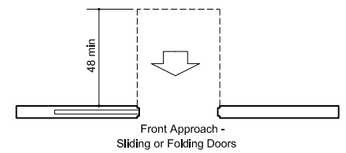

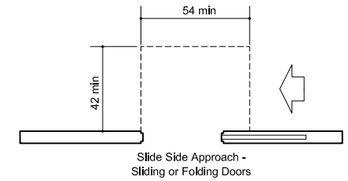

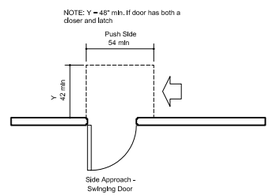

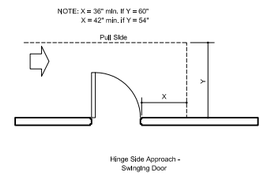

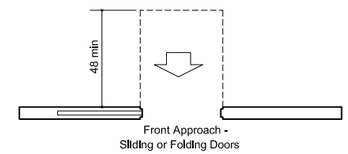

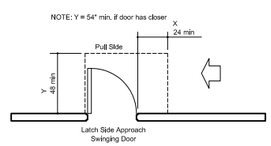

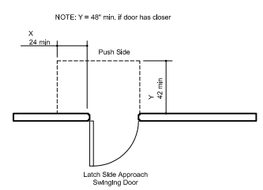

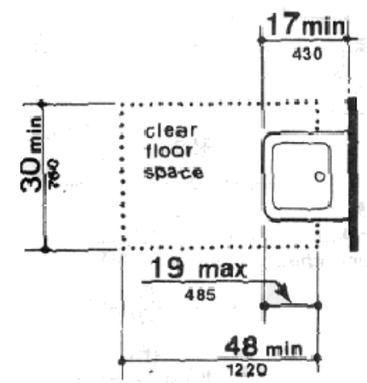

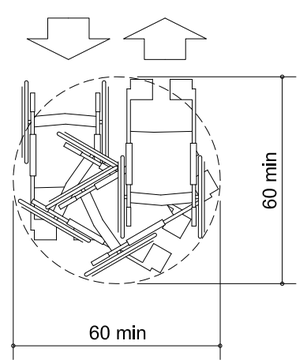

Wheelchair Turning Space

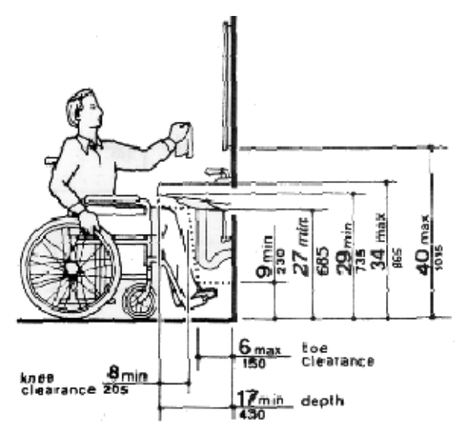

OPEN House

New York Institute of Technology
NORTHERN BLVD., OLD WESTBURY, NY 11568
TEL: 516-686-7659 FAX: 516-686-7921

Solar Decathlon 2007

CONSTRUCTION DOCUMENTS

TITLE:
LIFE SAFETY NOTES & SPECIFICATIONS

REVISIONS

No.	Date:	Description:
1	06.13.06	Design Development Drawings
2	03.06.07	Construction Drawings Rev. 1
3	08.07.07	Construction Drawings Rev. 2

Scale: 1/4" = 1' - 0"
Date: August 7th, 2007
Drawn By: MAF
Checked By: MM

DRAWING:
A6.0

SHEET: 29 of 66

FIRE ALARM LEGEND

SYMBOL	DESCRIPTION	
S.D.	SMOKE DETECTOR	I= IONIZATION P= PHOTOELECTRIC UF= UNDERFLOOR
C.D	CARBON MONOXIDE DETECTOR	
FE	PROVIDE DRY CHEMICAL "CO2" TYPE 13 lb. CAPACITY FIRE EXTINGUISHERS (F.E.), WHERE INDICATED ON THE FLOOR PLANS.	

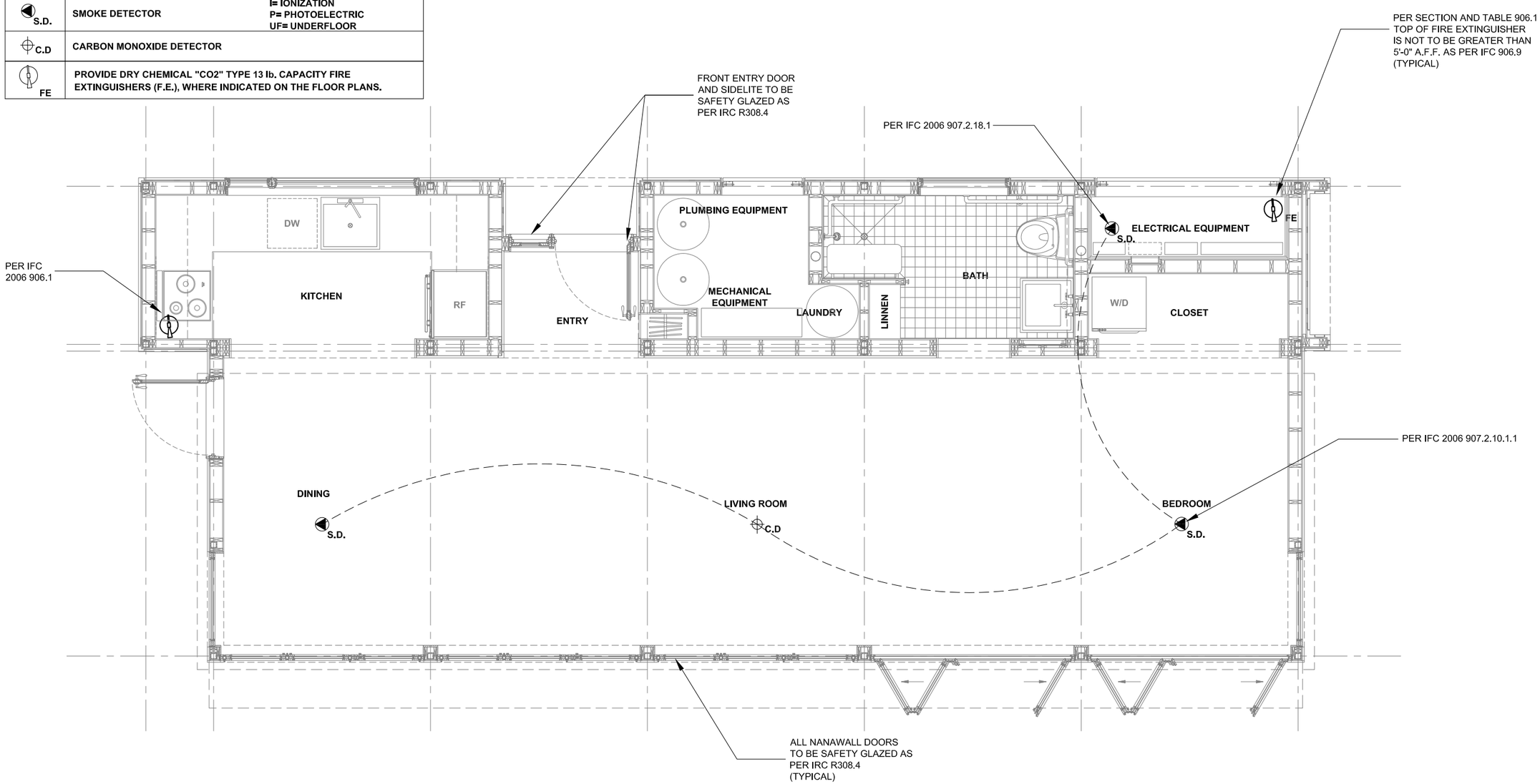

FIRE SAFETY PLAN

SCALE 1/4" = 1'- 0"

0 2' 4' 8'

OPEN House

New York Institute of Technology

NORTHERN BLVD., OLD WESTBURY, NY 11568
TEL: 516-686-7659 FAX: 516-686-7921

Solar Decathlon 2007

CONSTRUCTION DOCUMENTS

TITLE: **FIRE SAFETY PLAN**

Scale: 1/4" = 1' - 0"

Date: August 7th, 2007

Drawn By: MAF

Checked By: MCB

REVISIONS

No.	Date:	Description:
1	06.13.06	Design Development Drawings
2	03.06.07	Construction Drawings Rev. 1
3	08.07.07	Construction Drawings Rev. 2

DRAWING:

A6.1

SHEET: 30 of 66

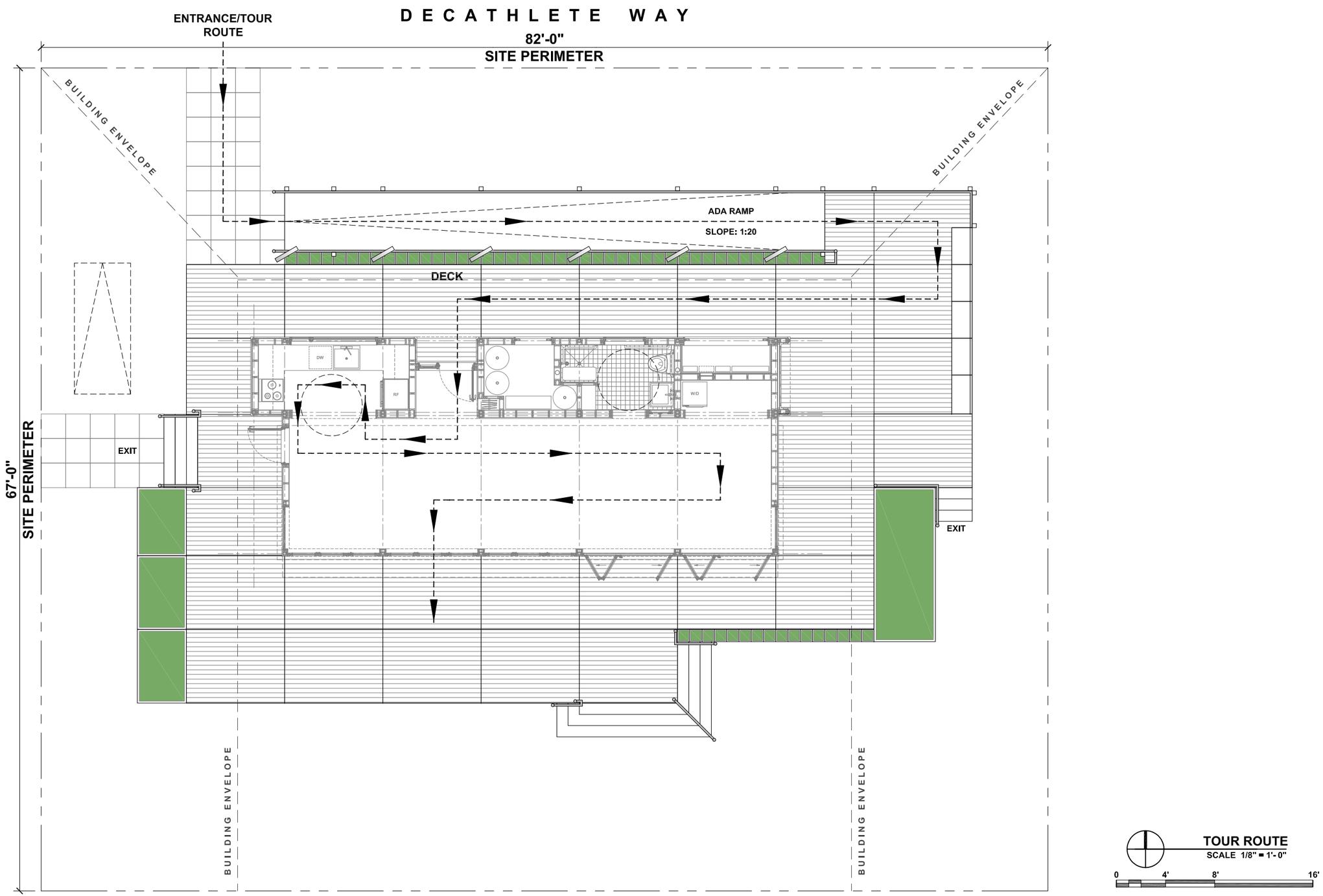

OPEN House

New York Institute of Technology
NORTHERN BLVD., OLD WESTBURY, NY 11568
TEL: 516-686-7659 FAX: 516-686-7921

Solar Decathlon 2007

CONSTRUCTION DOCUMENTS

TITLE: **TOUR ROUTE**

Scale: 1/8" = 1' - 0"

Date: August 7th, 2007

Drawn By: JEC

Checked By: MM

REVISIONS

No.	Date:	Description:
1	06.13.06	Design Development Drawings
2	03.06.07	Construction Drawings Rev. 1
3	08.07.07	Construction Drawings Rev. 2

DRAWING:

A 6.2

SHEET: 31 of 66

ADA SHOWER REQUIREMENTS:

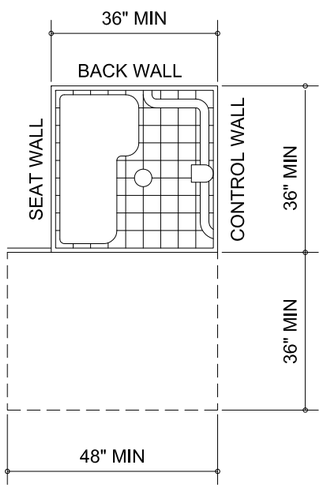

36" X 36" STALL
SHOWER SIZE AND CLEARANCES

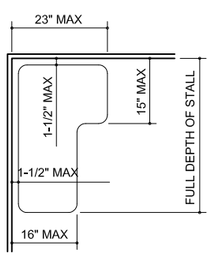

SHOWER SEAT DESIGN

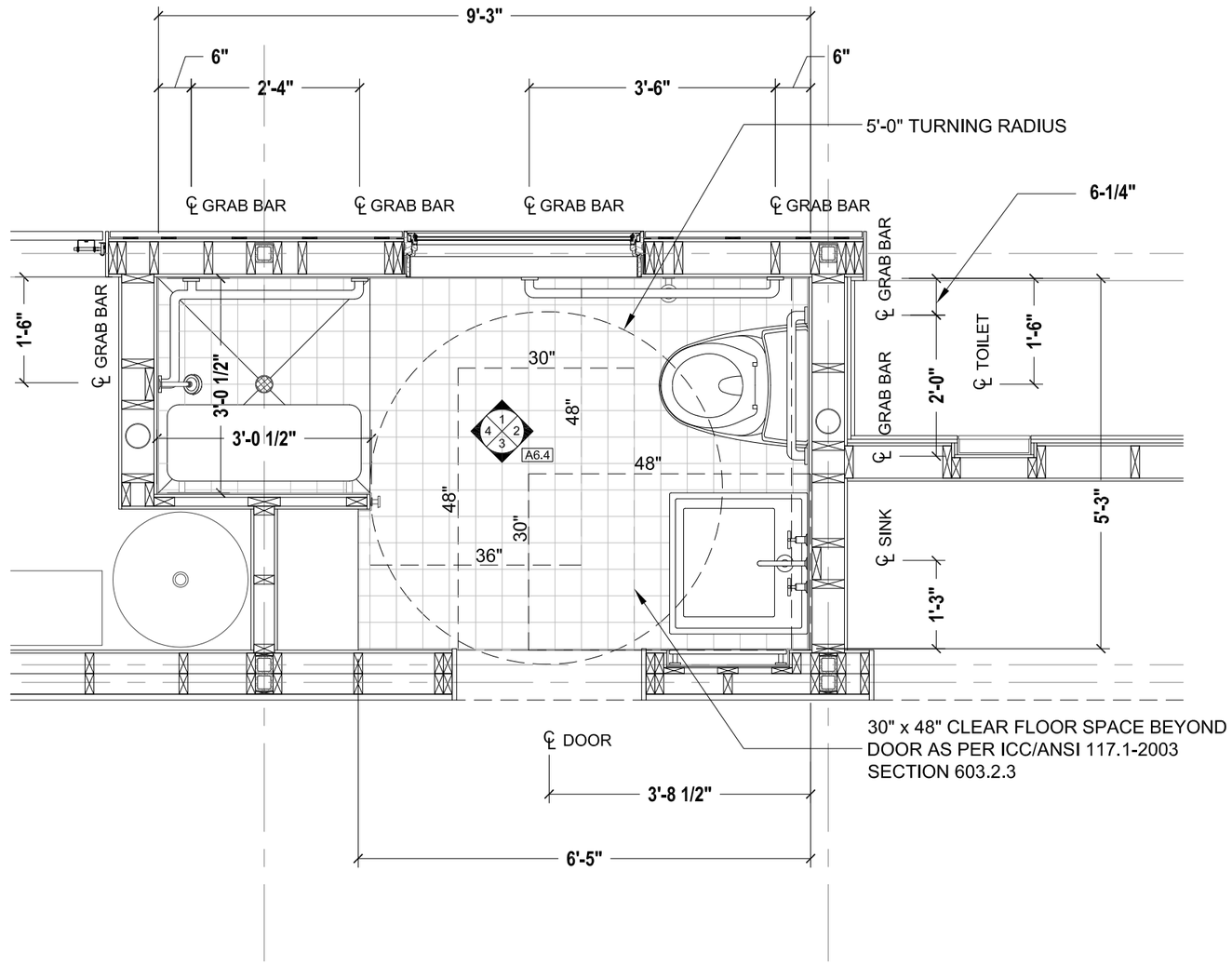

ADA BATHROOM PLAN
SCALE 1/2" = 1'- 0"

OPEN House

New York Institute of Technology
NORTHERN BLVD., OLD WESTBURY, NY 11568
TEL: 516-686-7659 FAX: 516-686-7921

Solar Decathlon 2007
CONSTRUCTION DOCUMENTS

TITLE: **ADA BATHROOM DETAILS**

Scale: **AS NOTED**
Date: **August 7th, 2007**
Drawn By: MAF
Checked By: MM

REVISIONS

No.	Date:	Description:
1	06.13.06	Design Development Drawings
2	03.06.07	Construction Drawings Rev. 1
3	08.07.07	Construction Drawings Rev. 2

DRAWING:
A 6.3

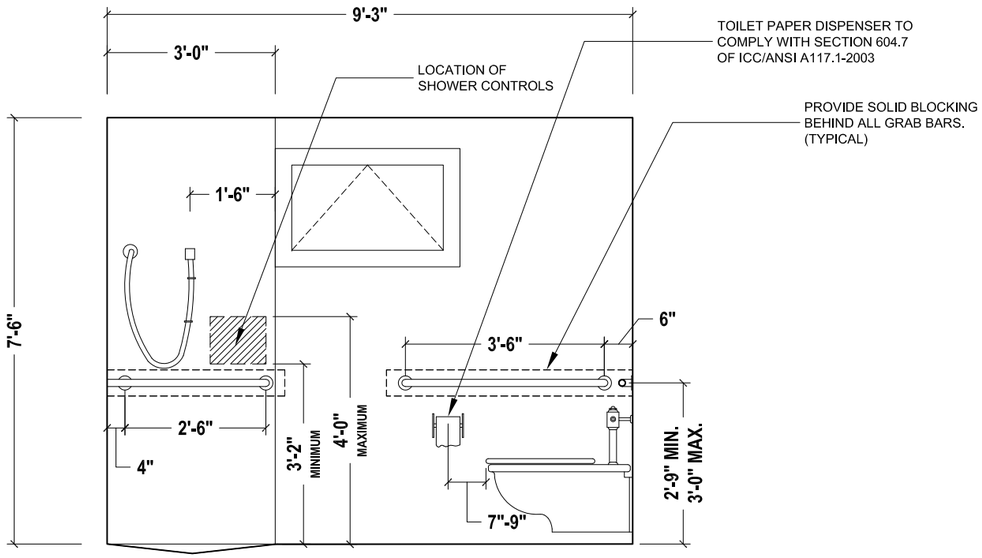

1 BATHROOM INTERIOR ELEVATION
SCALE 3/8" = 1'- 0"

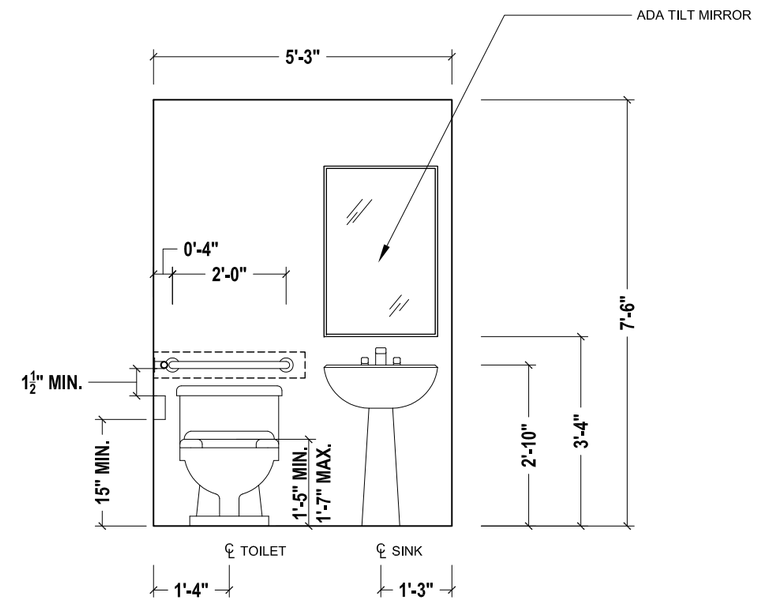

2 BATHROOM INTERIOR ELEVATION
SCALE 3/8" = 1'- 0"

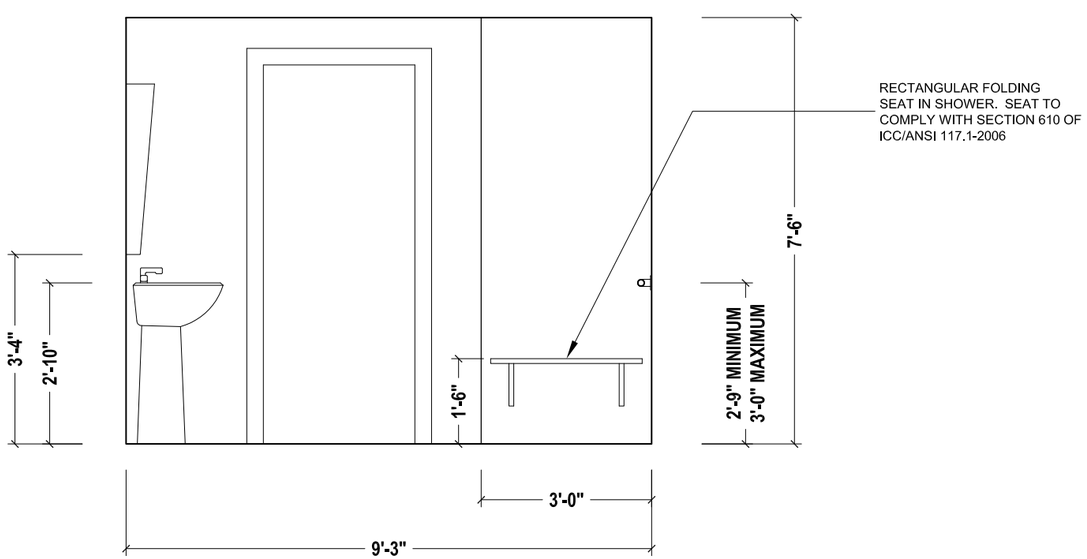

3 BATHROOM INTERIOR ELEVATION
SCALE 3/8" = 1'- 0"

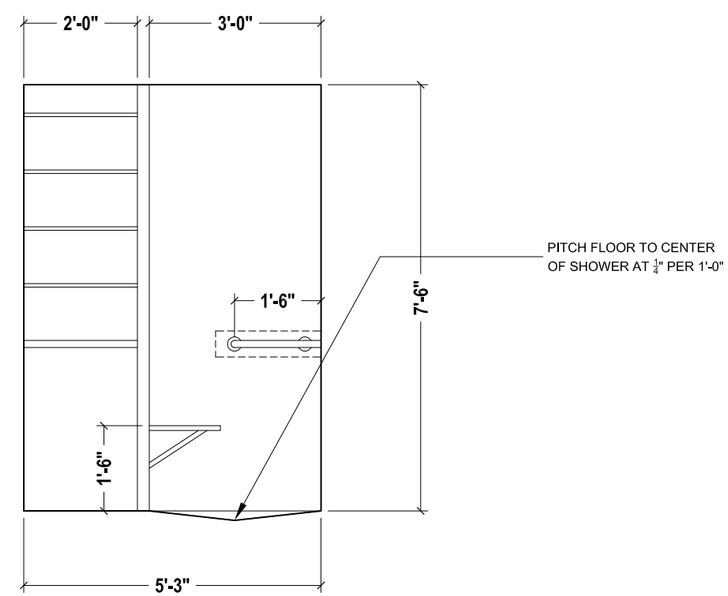

4 BATHROOM INTERIOR ELEVATION
SCALE 3/8" = 1'- 0"

OPEN House

New York Institute of Technology
NORTHERN BLVD., OLD WESTBURY, NY 11568
TEL: 516-686-7659 FAX: 516-686-7921

Solar Decathlon 2007

CONSTRUCTION DOCUMENTS

TITLE: **ADA BATHROOM DETAILS**

Scale: 3/8" = 1' - 0"
Date: August 7th, 2007
Drawn By: MAF
Checked By: MM

REVISIONS

No.	Date:	Description:
1	06.13.06	Design Development Drawings
2	03.06.07	Construction Drawings Rev. 1
3	08.07.07	Construction Drawings Rev. 2

DRAWING:

A6.4

SHEET: 33 of 66

STEEL NOTES

1. DESIGN, FABRICATION, AND ERECTION OF STRUCTURAL STEEL SHALL CONFORM TO LOCAL ORDINANCES, NEW YORK STATE BUILDING CODES, AND THE LASTEST EDITIONS OF THE AISC "SPECIFICATIONS FOR THE DESIGN, FABRICATION, AND ERECTION OF STRUCTURAL STEEL FOR BUILDINGS", AND THE AISI SPECIFICATIONS FOR THE DESIGN OF COLD-FORMED MEMBERS.

2. STRUCTURAL STEEL SHALL CONFORM TO ASTM GRADE DESIGNATION A992, GRADE 50 (STANDARD STRUCTURAL SHAPES) OR A500, GRADE B (STRUCTURAL TUBING). ALL ROOF STEEL HAS BEEN DESIGNED FOR A MINIMUM TOTAL LOAD OF 50 PSF UNLESS OTHERWISE NOTED.

3. SHOP AND FIELD CONNECTIONS NOT SPECIFICALLY DETAILED ON THE DRAWINGS SHALL BE WELDED OR BOLTED.

4. ALL WELDING SHALL COMPLY WITH THE AMERICAN WELDING SOCIETY (AWS) STRUCTURAL WELDING CODE STANDARDS. ALL WELDING SHALL BE PERFORMED BY CERTIFIED WELDERS. ALL WELDING IS TO BE PERFORMED WITH E70XX ELECTRODES UNLESS OTHERWISE NOTED OR REQUIRED. REMOVE ALL DIRT, GREASE, PAINT, AND BURRS WITHIN 3" OF ALL WELDS. ALL BEAM SPLICES SHALL DEVELOP THE FULL STRENGTH OF THE MEMBERS BEING JOINED.

5. ALL WELDS NOT SPECIFICALLY CALLED OUT ON THE DRAWING SHALL BE THE MINIMUM WELD SIZE, AS SPECIFIED BY THE AISC MANUAL, LATEST EDITION.

6. BOLTED CONNECTIONS SHALL BE FRICTION-TYPE USING HIGH-STRENGTH, ¾" DIAMETER, A-325 BOLTS WITH ASTM A90 GALVANIZED COATING SET IN 13/16" DIAMETER HOLES IN ACCORDANCE WITH THE AISC SPECIFICATIONS FOR STRUCTURAL JOINTS, LATEST EDITION. MINIMUM WEB CONNECTION(S) SHALL HAVE (2) BOLTS.

7. INCORRECTLY FABRICATED, DAMAGED, OR OTHERWISE MISFITTING AND/OR NON-CONFORMING MATERIALS OR CONDITIONS SHALL BE REPORTED TO NYIT PRIOR TO REMEDIAL ACTION. ANY SUCH ACTION SHALL REQUIRE NYIT'S APPROVAL.

8. ALL STEEL PLATES AND ANGLES SHALL CONFORM TO ASTM GRADE DESIGNATION A36.

9. DO NOT SCALE DRAWINGS. WRITTEN DIMENSIONS SUPERCEDE SCALED DIMENSIONS.

10. ALL STRUCTURAL STEEL TUBES TO BE DRIED AND CAPPED TO PREVENT MOISTURE DAMAGE FROM THE INSIDE OF BEAM.

STRUCTURAL INSULATED PANEL (SIP) NOTES

1. ALL ROOF AND FLOOR PANELS TO BE 6-⅝" STRUCTURAL INSULATED PANELS AS MANUFACTURED BY MURUS. (MODEL# - OSB-2165PUR) REFER TO MANUFACTURER'S SPECIFICATIONS AND INSTALLATION INSTRUCTIONS.

STRUCTURAL DESIGN LOADS

REFER TO THE "STRUCTURAL CALCULATIONS FOR THE NYIT SOLAR DECATHLON 2007" BY RUDOLPH SHATARAH DATED 03/06/07 UNDER SEPARATE COVER.

STRUCTURAL DESIGN CRITERIA:

DESIGN STANDARD	ASCE 7-02
FLOOR LIVE LOAD	
-MEANS OF EGRESS	100 PSF
-ALL OTHER AREAS	50 PSF
ROOF LIVE LOAD	20 PSF
RAILINGS	200 LB. (APPLIED IN ANY DIRECTION AT ANY POINT AT TOP OF RAIL)
WIND	90 MPH (3 SECOND GUST) EXPOSURE C
ALLOWABLE SOIL BEARING	1,000 PSF

OPEN House

New York Institute of Technology
NORTHERN BLVD., OLD WESTBURY, NY 11568
TEL: 516-686-7659 FAX: 516-686-7921

Solar Decathlon 2007

CONSTRUCTION DOCUMENTS

TITLE: STRUCTURAL NOTES & SPECIFICATIONS

Scale: NOT TO SCALE

Date: August 7th, 2007

Drawn By: MAF

Checked By: MM

REVISIONS

No.	Date:	Description:
1	06.13.06	Design Development Drawings
2	03.06.07	Construction Drawings Rev. 1
3	08.07.07	Construction Drawings Rev. 2

DRAWING:

S 1.0

SHEET: 34 of 66

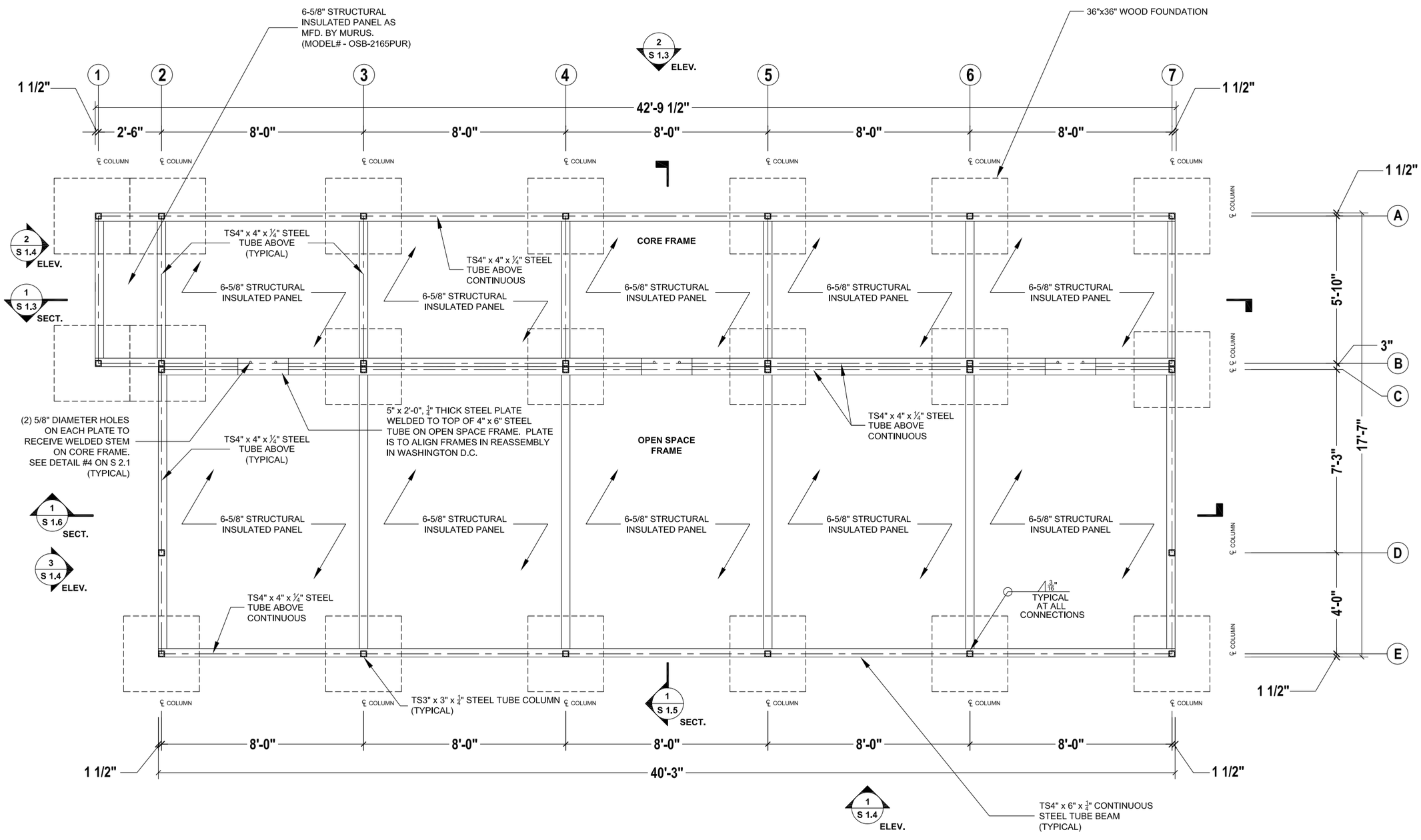

STRUCTURAL STEEL PLAN

SCALE 1/4" = 1'- 0"

0 2' 4' 8'

OPENHouse

New York Institute of Technology
NORTHERN BLVD., OLD WESTBURY, NY 11568
TEL: 516-686-7659 FAX: 516-686-7921

Solar Decathlon 2007

CONSTRUCTION DOCUMENTS

TITLE: **STRUCTURAL STEEL FRAME PLAN**

Scale: 1/4" = 1' - 0"

Date: August 7th, 2007

Drawn By: MAF

Checked By: MM

REVISIONS

No.	Date:	Description:
1	06.13.06	Design Development Drawings
2	03.06.07	Construction Drawings Rev. 1
3	08.07.07	Construction Drawings Rev. 2

DRAWING:

S 1.1

SHEET: 35 of 66

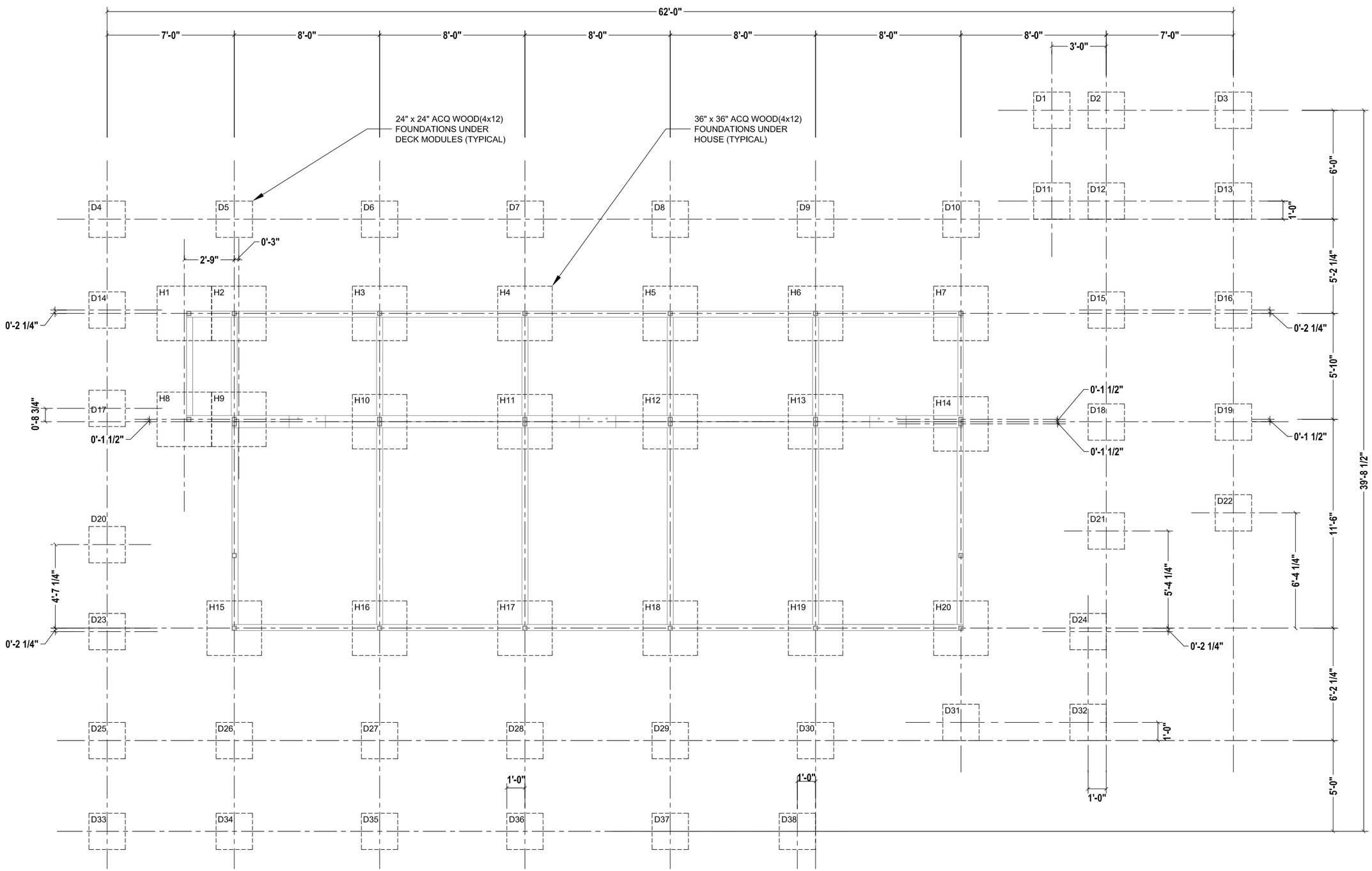

FOUNDATION PLAN

SCALE 3/16" = 1'- 0"

0 2' 4' 8'

OPEN House

New York Institute of Technology

NORTHERN BLVD., OLD WESTBURY, NY 11568
TEL: 516-686-7659 FAX: 516-686-7921

Solar Decathlon 2007

CONSTRUCTION DOCUMENTS

TITLE: **FOUNDATION PLAN**

Scale: 3/16" = 1' - 0"

Date: August 7th, 2007

Drawn By: MAF

Checked By: MM

REVISIONS

No.	Date:	Description:
1	06.13.06	Design Development Drawings
2	03.06.07	Construction Drawings Rev. 1
3	08.07.07	Construction Drawings Rev. 2

DRAWING:

S 1.1A

SHEET: 36 of 66

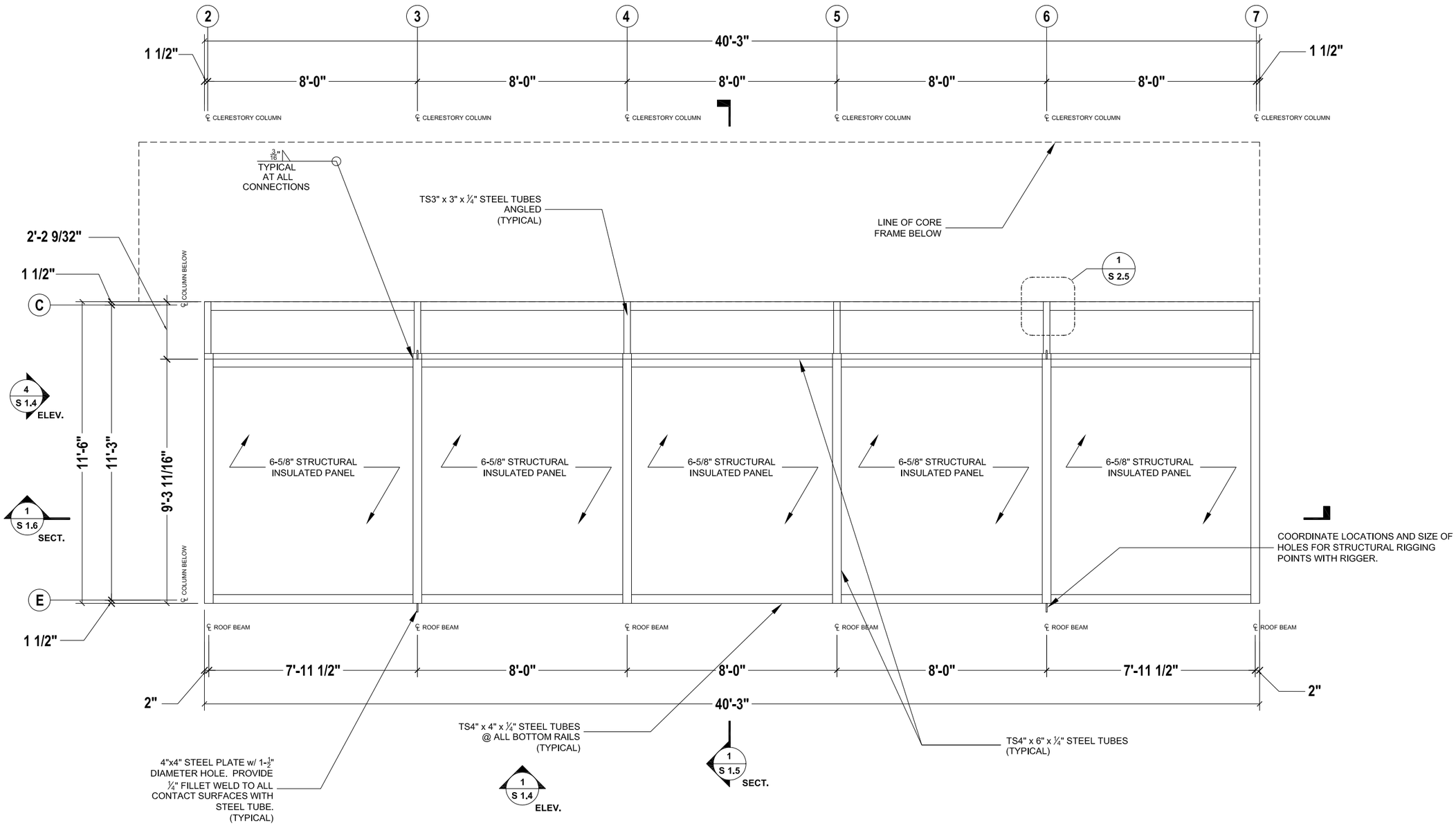

STRUCTURAL STEEL ROOF PLAN

SCALE 1/4" = 1'- 0"

0 2' 4' 8'

OPEN House

New York Institute of Technology

NORTHERN BLVD., OLD WESTBURY, NY 11568
TEL: 516-686-7659 FAX: 516-686-7921

Solar Decathlon 2007

CONSTRUCTION DOCUMENTS

TITLE: **STRUCTURAL STEEL ROOF PLAN**

Scale: 1/4" = 1' - 0"

Date: August 7th, 2007

Drawn By: MAF

Checked By: MM

REVISIONS

No.	Date:	Description:
1	06.13.06	Design Development Drawings
2	03.06.07	Construction Drawings Rev. 1
3	08.07.07	Construction Drawings Rev. 2

DRAWING:

S 1.2

SHEET: 37 of 66

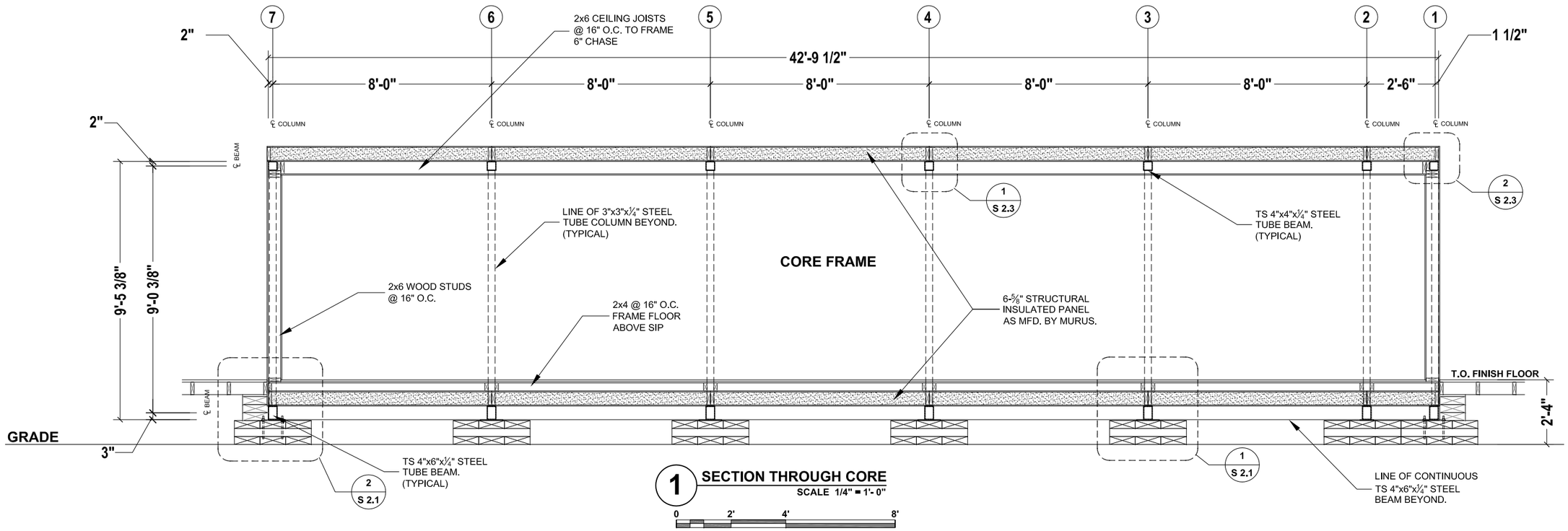

1 SECTION THROUGH CORE
SCALE 1/4" = 1'- 0"

0 2' 4' 8'

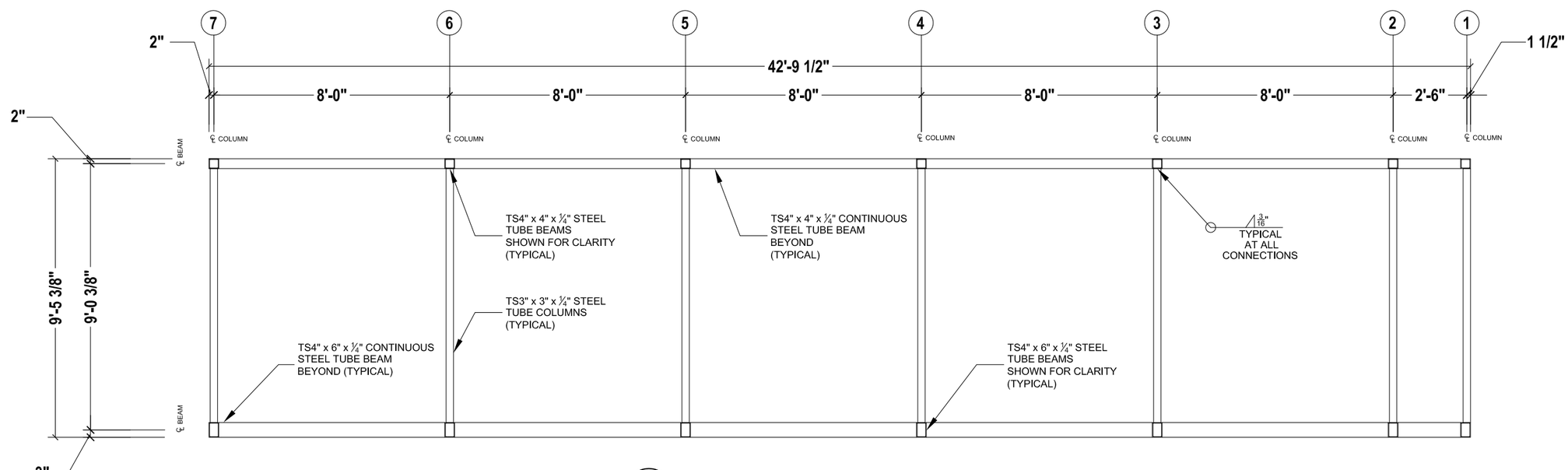

2 CORE NORTH ELEVATION
SCALE 1/4" = 1'- 0"

0 2' 4' 8'

OPEN House

New York Institute of Technology
NORTHERN BLVD., OLD WESTBURY, NY 11568
TEL: 516-686-7659 FAX: 516-686-7921

Solar Decathlon 2007

CONSTRUCTION DOCUMENTS

TITLE: **CORE FRAME SECTION & ELEVATION**

Scale: 1/4" = 1' - 0"

Date: August 7th, 2007

Drawn By: MAF

Checked By: MM

REVISIONS

No.	Date:	Description:
1	06.13.06	Design Development Drawings
2	03.06.07	Construction Drawings Rev. 1
3	08.07.07	Construction Drawings Rev. 2

DRAWING:

S 1.3

SHEET: 38 of 66

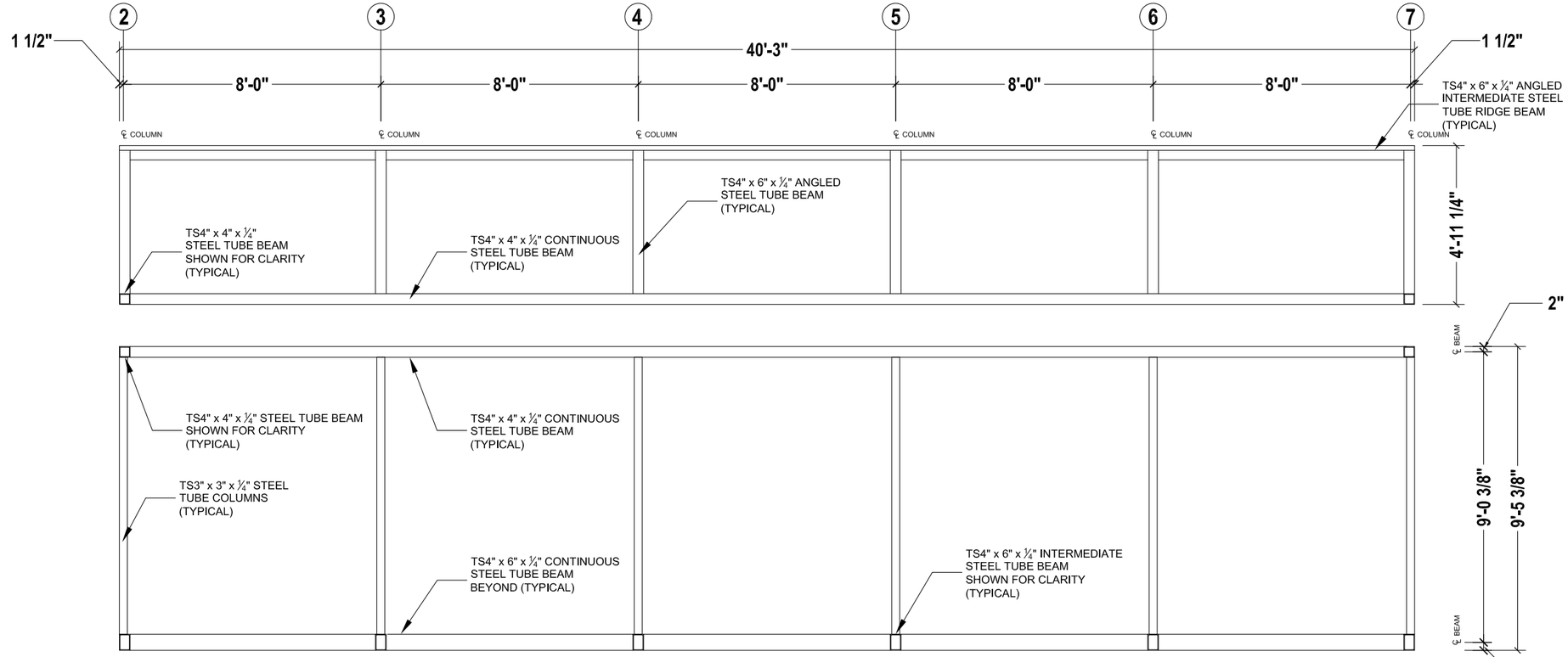

1 OPEN SPACE & ROOF FRAME SOUTH ELEVATION

SCALE 1/4" = 1'- 0"

0 2' 4' 8'

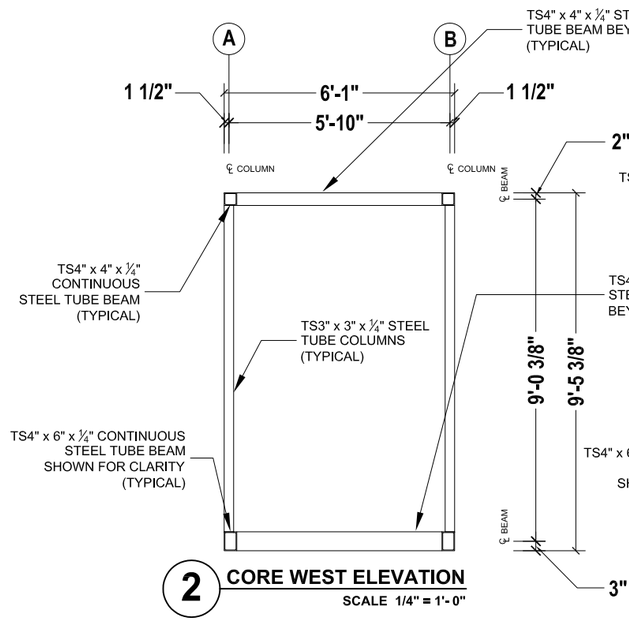

2 CORE WEST ELEVATION

SCALE 1/4" = 1'- 0"

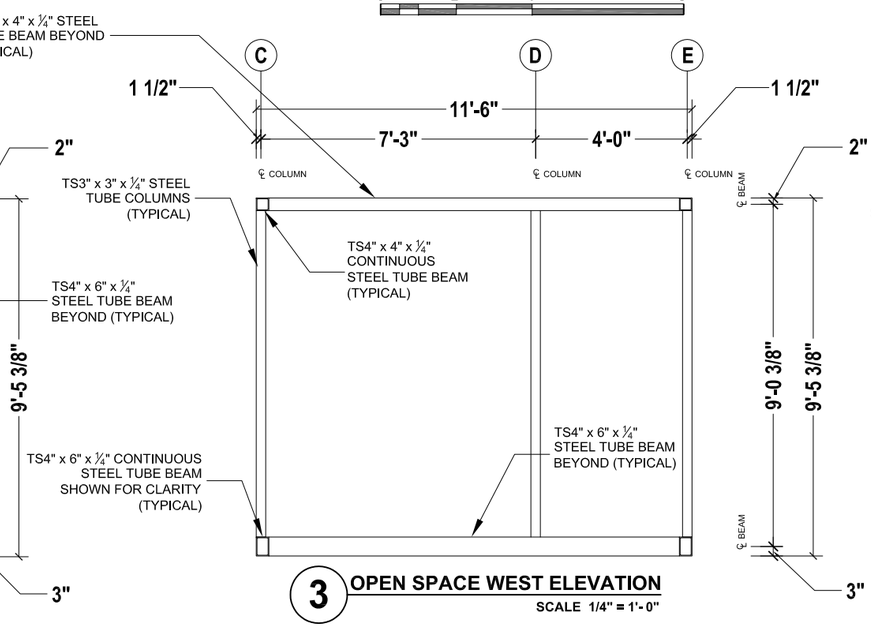

3 OPEN SPACE WEST ELEVATION

SCALE 1/4" = 1'- 0"

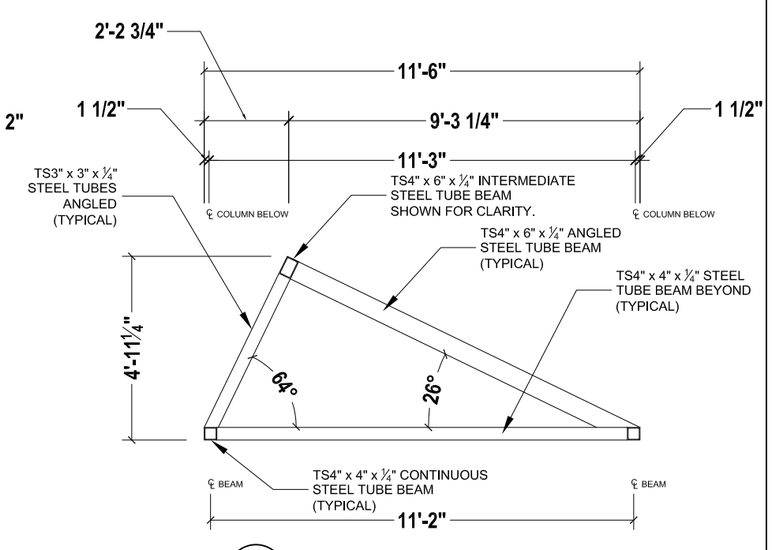

4 ROOF FRAME WEST ELEVATION

SCALE 1/4" = 1'- 0"

OPEN House

New York Institute of Technology

NORTHERN BLVD., OLD WESTBURY, NY 11568
TEL: 516-686-7659 FAX: 516-686-7921

Solar Decathlon 2007

CONSTRUCTION DOCUMENTS

TITLE: **STEEL FRAME ELEVATIONS**

Scale: 1/4" = 1' - 0"

Date: August 7th, 2007

Drawn By: MAF

Checked By: MM

REVISIONS

No.	Date:	Description:
1	06.13.06	Design Development Drawings
2	03.06.07	Construction Drawings Rev. 1
3	08.07.07	Construction Drawings Rev. 2

DRAWING:

S 1.4

SHEET: 39 of 66

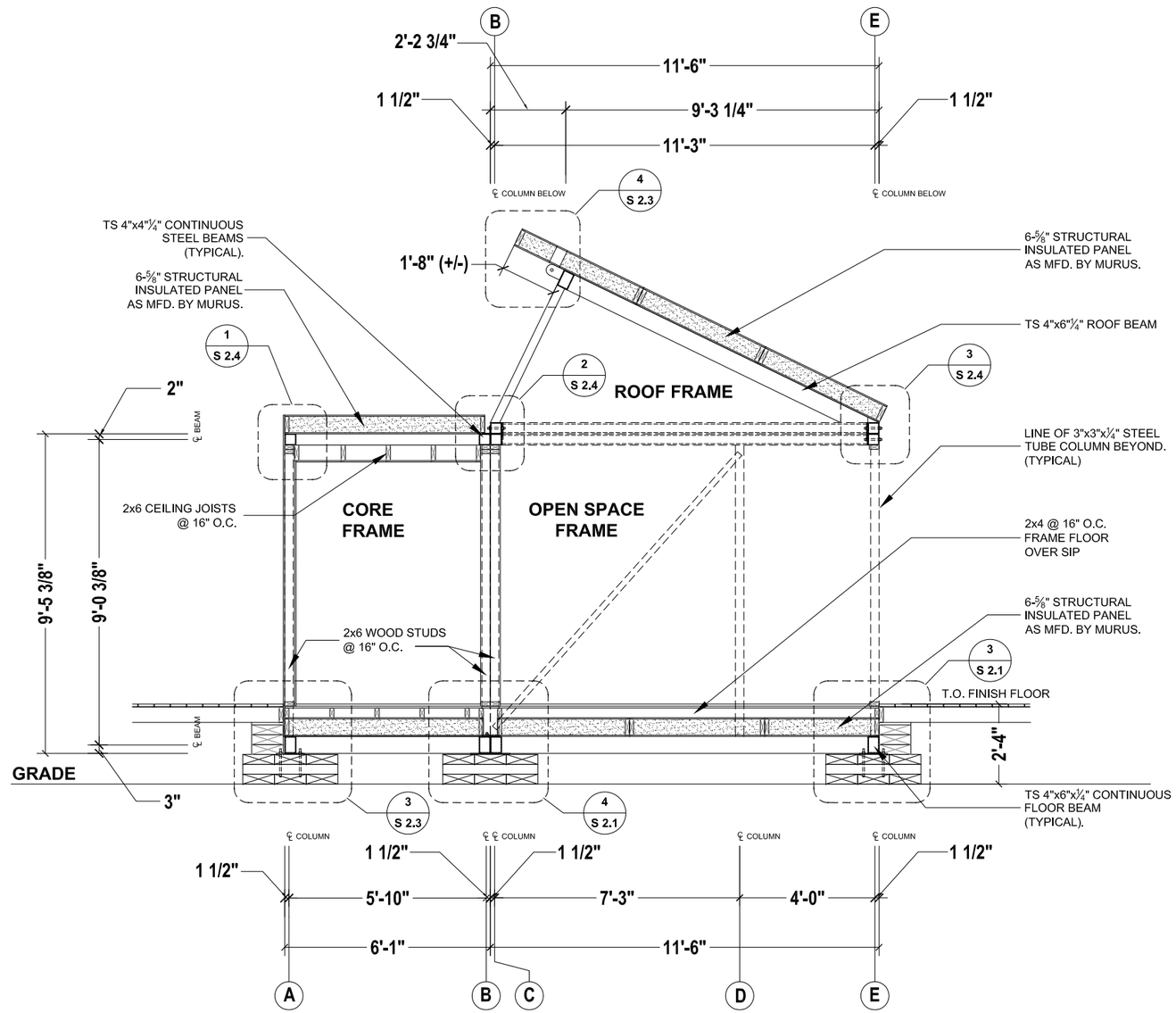

1 STRUCTURAL CROSS SECTION

SCALE 1/4" = 1'- 0"

0 2' 4' 8'

OPEN House

New York Institute of Technology

NORTHERN BLVD., OLD WESTBURY, NY 11568
TEL: 516-686-7659 FAX: 516-686-7921

Solar Decathlon 2007

CONSTRUCTION DOCUMENTS

TITLE: **STRUCTURAL FRAME CROSS SECTION**

Scale: 1/4" = 1' - 0"

Date: August 7th, 2007

Drawn By: MAF

Checked By: MM

REVISIONS

No.	Date:	Description:
1	06.13.06	Design Development Drawings
2	03.06.07	Construction Drawings Rev. 1
3	08.07.07	Construction Drawings Rev. 2

DRAWING:

S 1.5

SHEET: 40 of 66

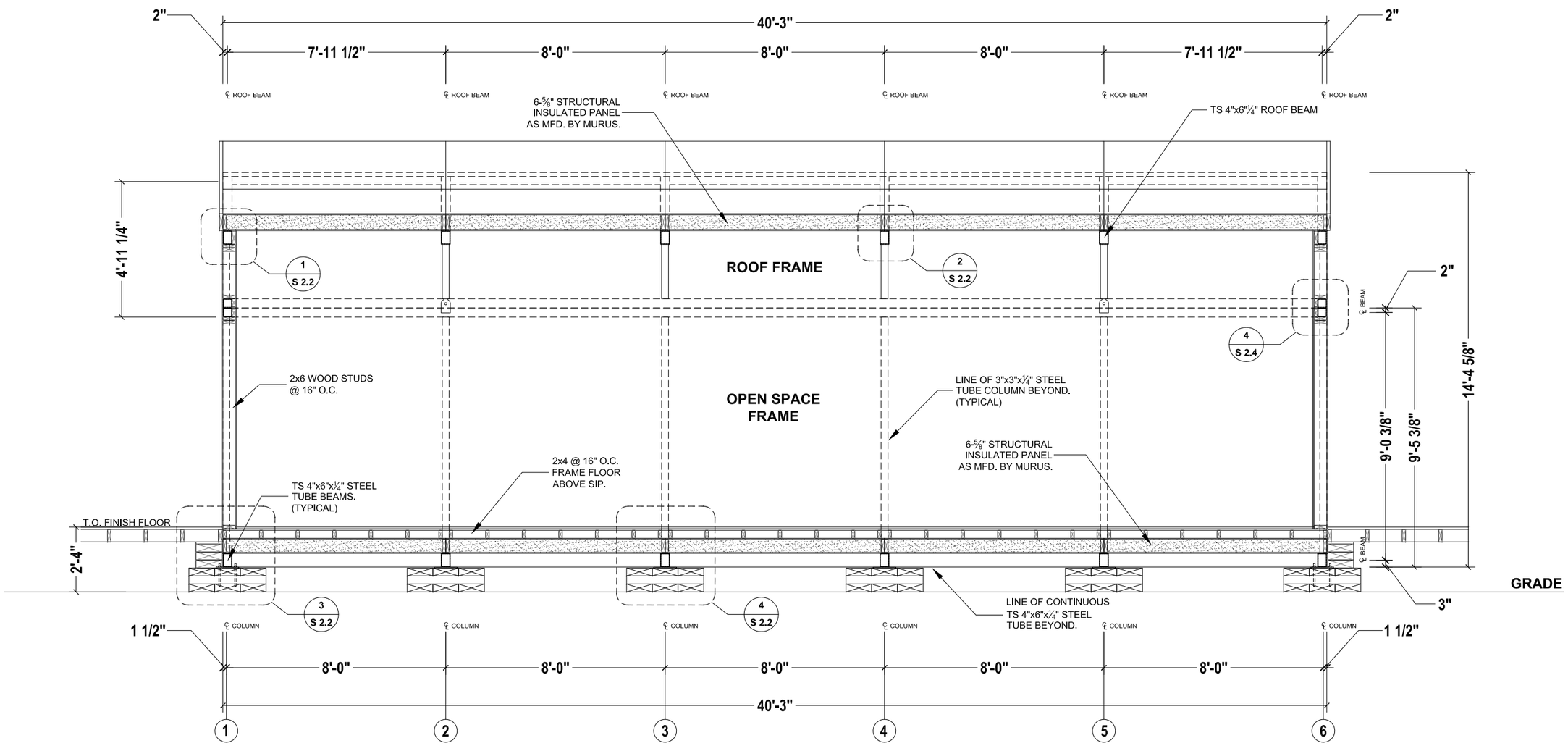

1 LONGITUDINAL SECTION THROUGH OPEN SPACE & ROOF

SCALE 1/4" = 1'- 0"

0 2' 4' 8'

OPENHouse

New York Institute of Technology

NORTHERN BLVD., OLD WESTBURY, NY 11568
TEL: 516-686-7659 FAX: 516-686-7921

Solar Decathlon 2007

CONSTRUCTION DOCUMENTS

TITLE: **STRUCTURAL FRAME LONGITUDINAL SECTION**

Scale: 1/4" = 1' - 0"

Date: August 7th, 2007

Drawn By: MAF

Checked By: MM

REVISIONS

No.	Date:	Description:
1	06.13.06	Design Development Drawings
2	03.06.07	Construction Drawings Rev. 1
3	08.07.07	Construction Drawings Rev. 2

DRAWING:

S 1.6

SHEET: 41 of 66

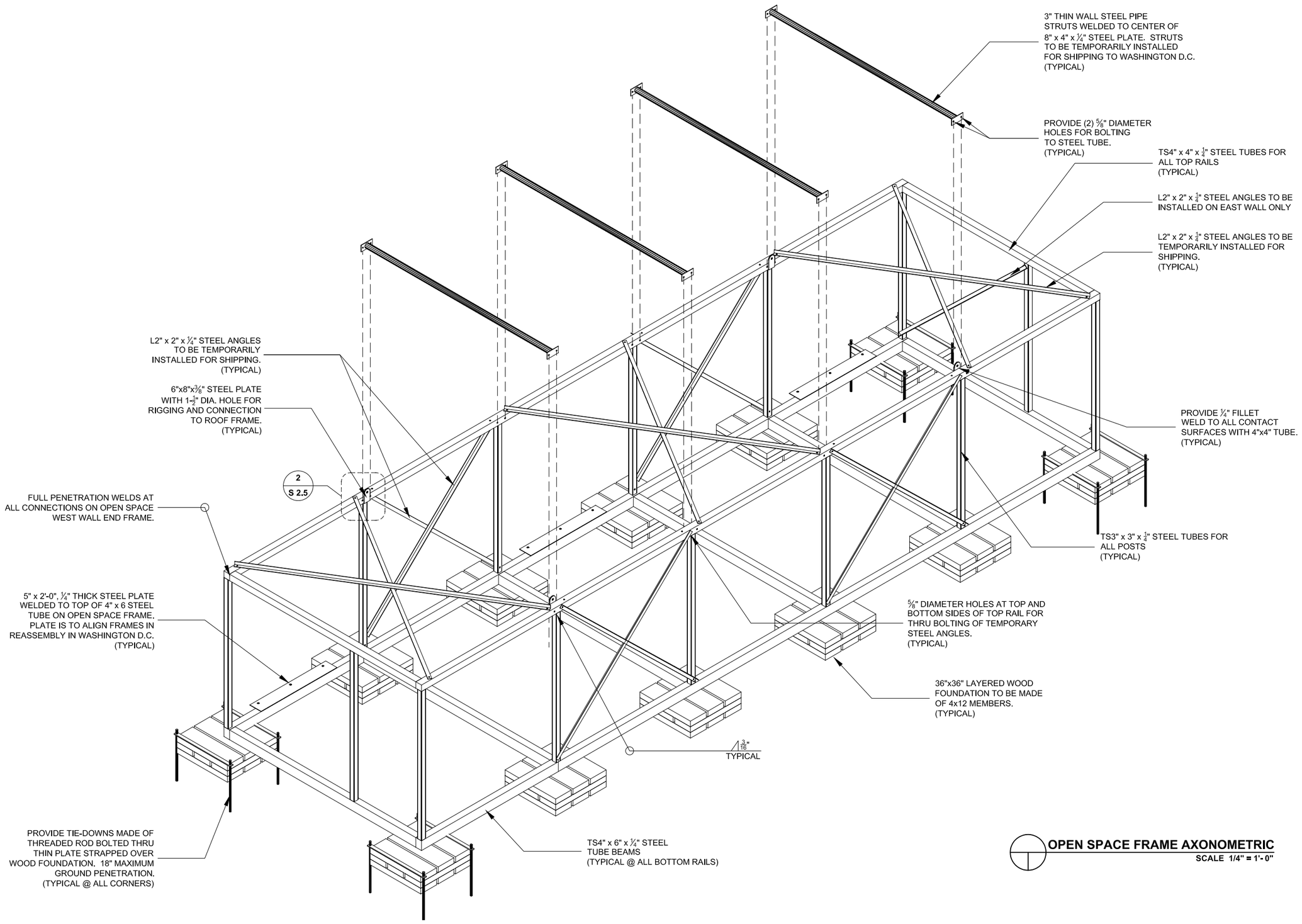

OPEN SPACE FRAME AXONOMETRIC
SCALE 1/4" = 1'- 0"

OPEN House

New York Institute of Technology
NORTHERN BLVD., OLD WESTBURY, NY 11568
TEL: 516-686-7659 FAX: 516-686-7921

Solar Decathlon 2007

CONSTRUCTION DOCUMENTS

TITLE: **OPEN SPACE FRAME AXONOMETRIC**

Scale: 1/4" = 1' - 0"

Date: August 7th, 2007

Drawn By: MAF

Checked By: MM

REVISIONS

No.	Date:	Description:
1	06.13.06	Design Development Drawings
2	03.06.07	Construction Drawings Rev. 1
3	08.07.07	Construction Drawings Rev. 2

DRAWING:

S 1.7

SHEET: 42 of 66

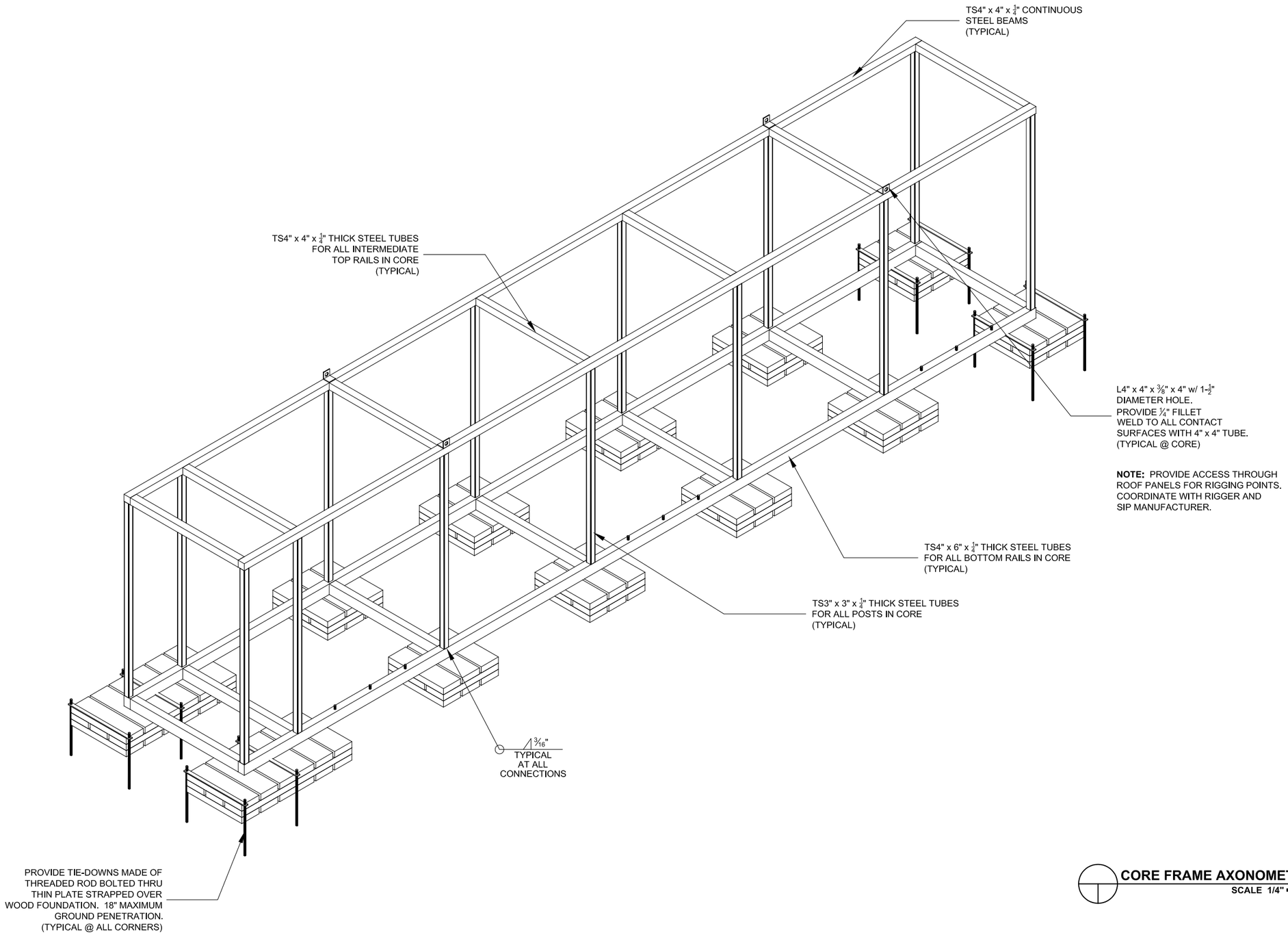

CORE FRAME AXONOMETRIC
SCALE 1/4" = 1'- 0"

OPENHouse

New York Institute of Technology
NORTHERN BLVD., OLD WESTBURY, NY 11568
TEL: 516-686-7659 FAX: 516-686-7921

Solar Decathlon 2007

CONSTRUCTION DOCUMENTS

TITLE: **CORE FRAME AXONOMETRIC**

Scale: 1/4" = 1' - 0"

Date: August 7th, 2007

Drawn By: MAF

Checked By: MM

REVISIONS

No.	Date:	Description:
1	06.13.06	Design Development Drawings
2	03.06.07	Construction Drawings Rev. 1
3	08.07.07	Construction Drawings Rev. 2

DRAWING:

S 1.8

SHEET: 43 of 66

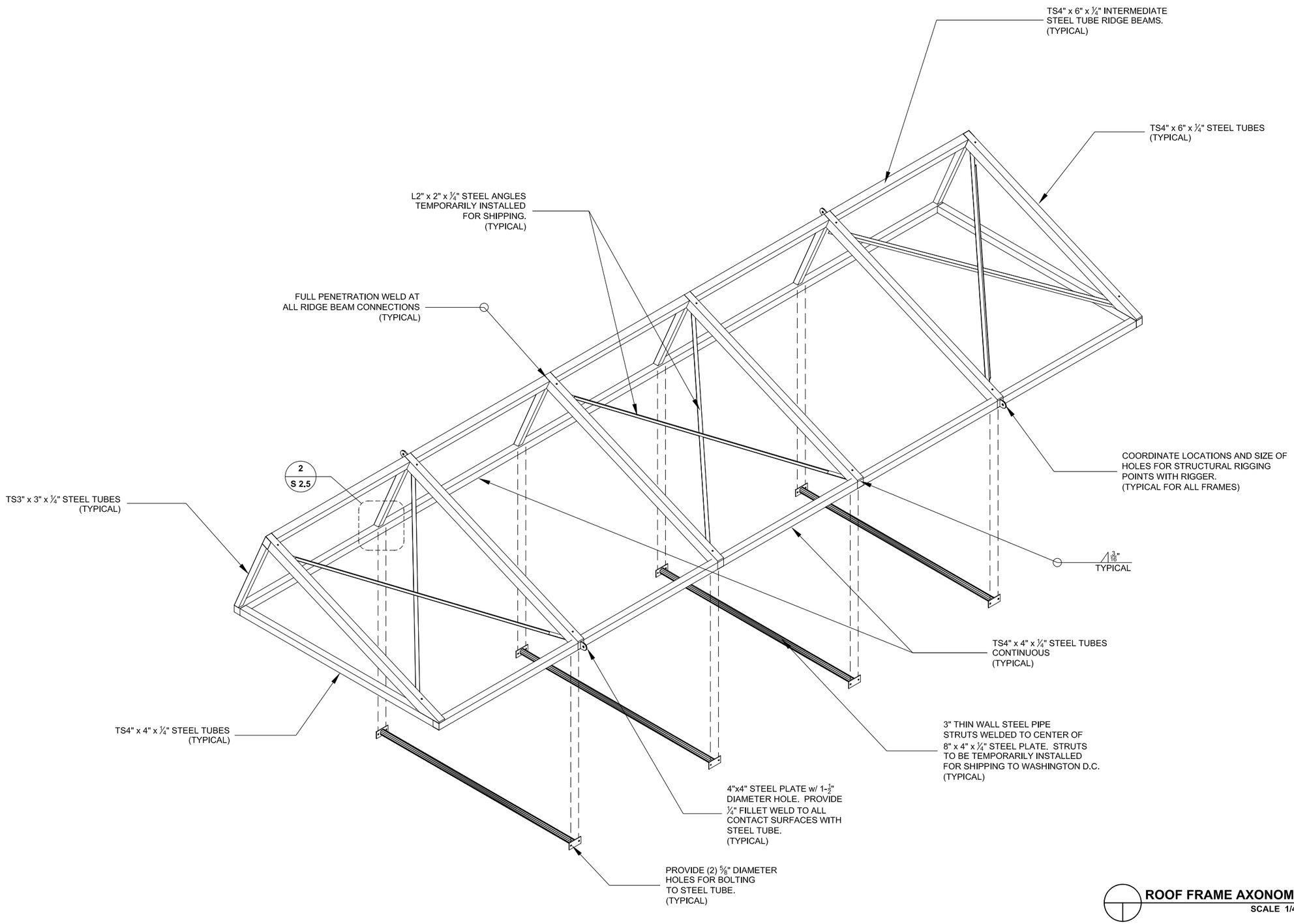

ROOF FRAME AXONOMETRIC
SCALE 1/4" = 1'- 0"

OPEN House

New York Institute of Technology
NORTHERN BLVD., OLD WESTBURY, NY 11568
TEL: 516-686-7659 FAX: 516-686-7921

Solar Decathlon 2007

CONSTRUCTION DOCUMENTS

TITLE: **ROOF FRAME AXONOMETRIC**

Scale: 1/4" = 1' - 0"
Date: August 7th, 2007
Drawn By: MAF
Checked By: MM

REVISIONS

No.	Date:	Description:
1	06.13.06	Design Development Drawings
2	03.06.07	Construction Drawings Rev. 1
3	08.07.07	Construction Drawings Rev. 2

DRAWING:

S 1.9

SHEET: 44 of 66

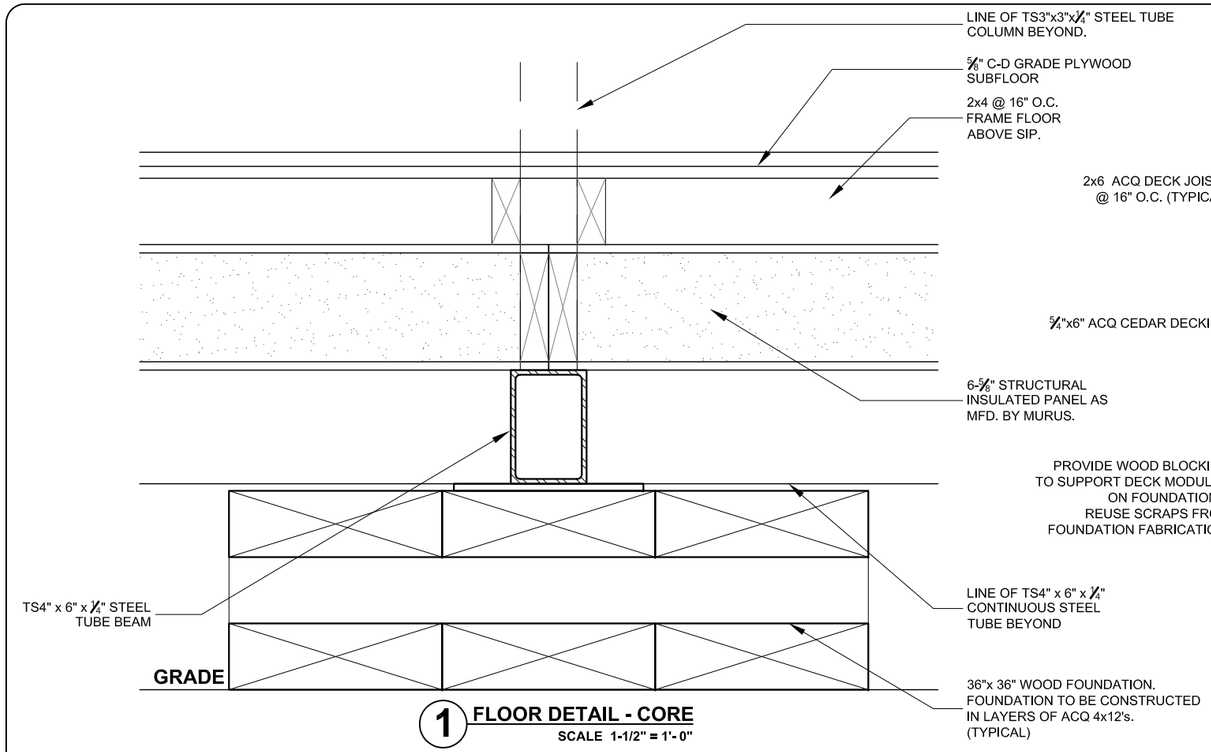

1 FLOOR DETAIL - CORE
SCALE 1-1/2" = 1'- 0"

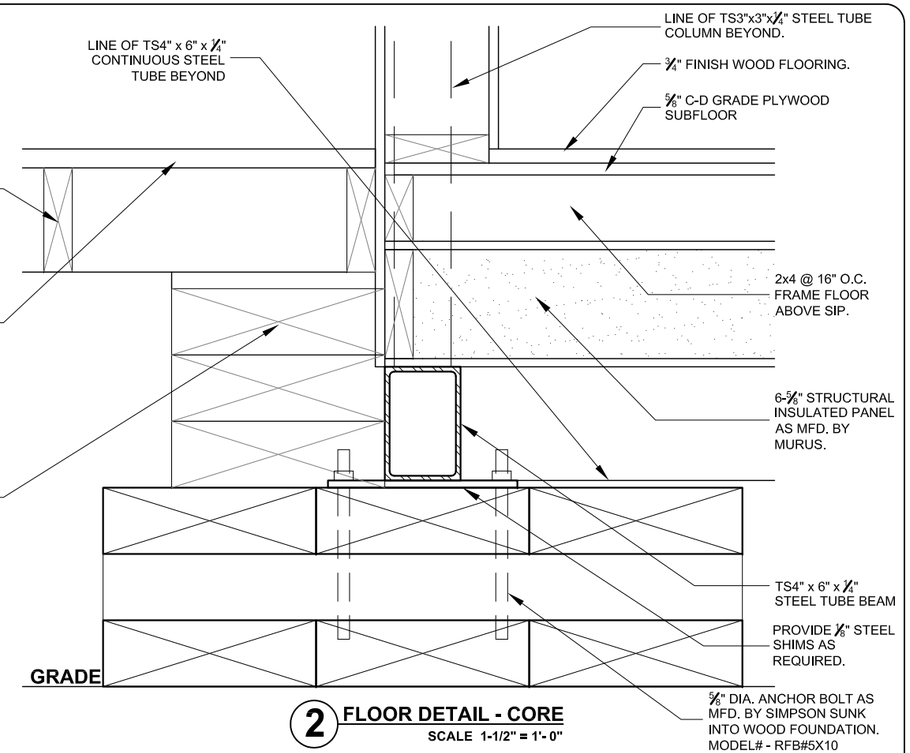

2 FLOOR DETAIL - CORE
SCALE 1-1/2" = 1'- 0"

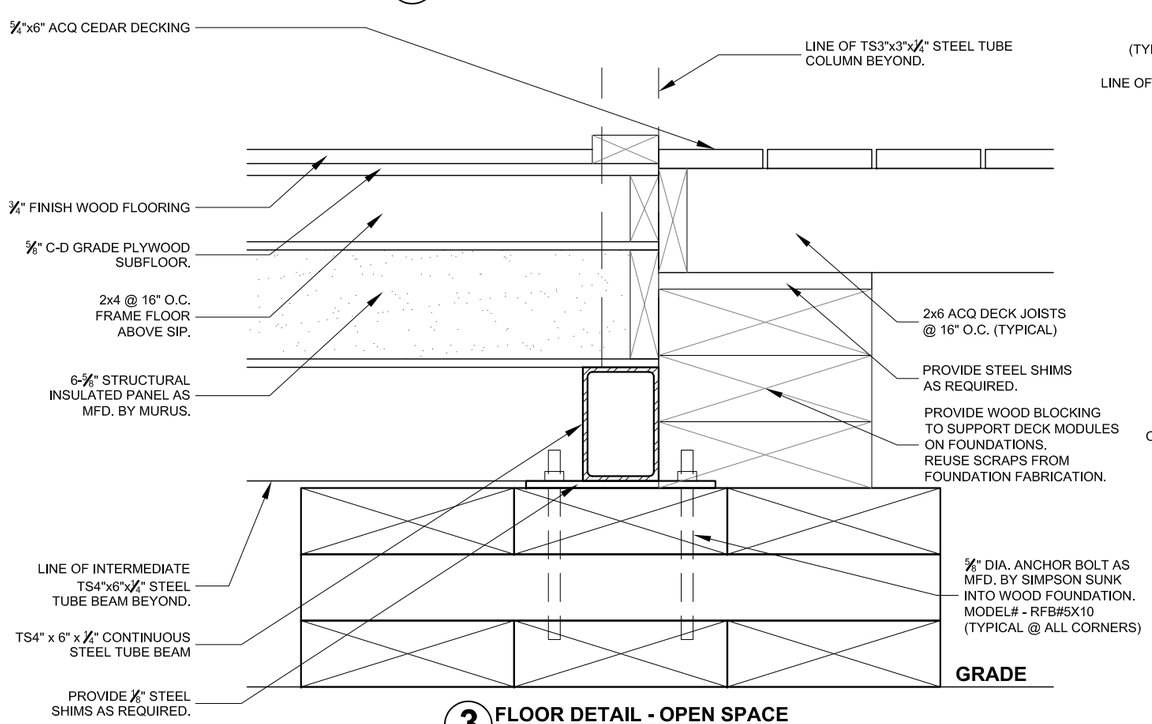

3 FLOOR DETAIL - OPEN SPACE
SCALE 1-1/2" = 1'- 0"

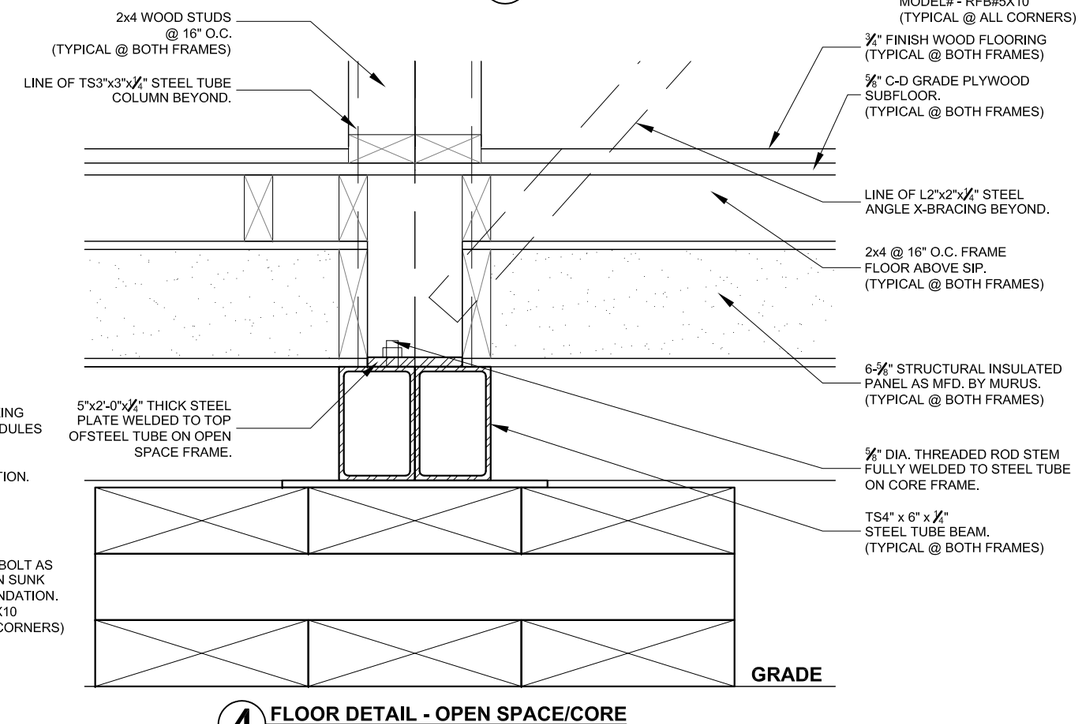

4 FLOOR DETAIL - OPEN SPACE/CORE
SCALE 1-1/2" = 1'- 0"

OPEN House

New York Institute of Technology
NORTHERN BLVD., OLD WESTBURY, NY 11568
TEL: 516-686-7659 FAX: 516-686-7921

Solar Decathlon 2007

CONSTRUCTION DOCUMENTS

TITLE: STRUCTURAL DETAILS

Scale: 1-½" = 1' - 0"

Date: August 7th, 2007

Drawn By: MAF

Checked By: MM

REVISIONS

No.	Date:	Description:
1	06.13.06	Design Development Drawings
2	03.06.07	Construction Drawings Rev. 1
3	08.07.07	Construction Drawings Rev. 2

DRAWING:

S 2.1

SHEET: 45 of 66

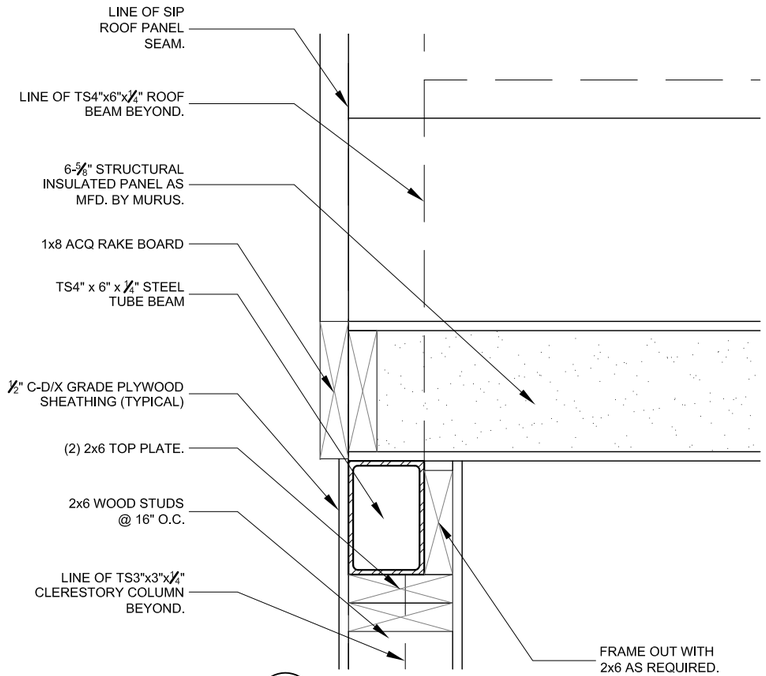

1 RAKE DETAIL - ROOF
SCALE 1-1/2" = 1'- 0"

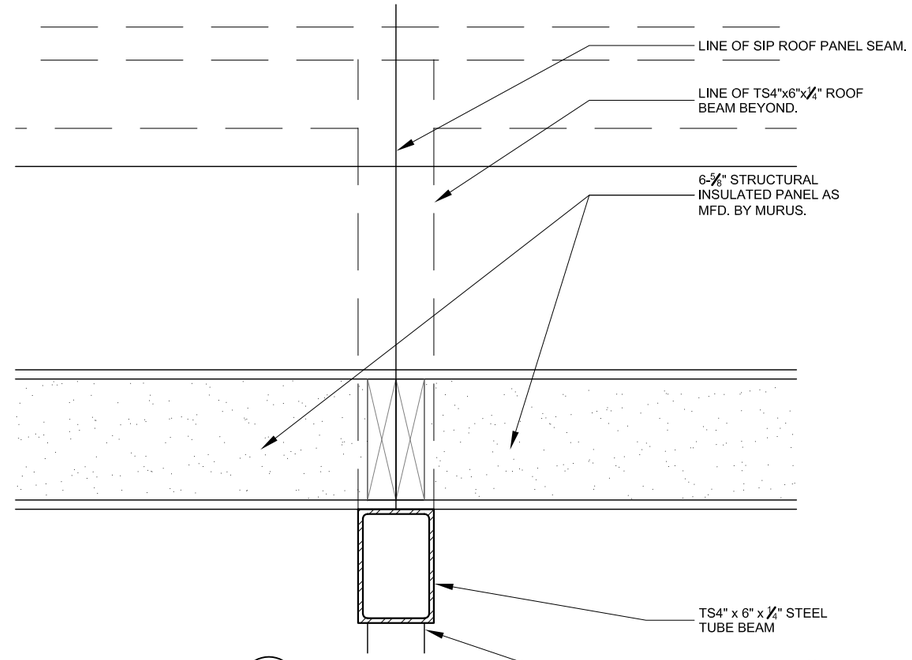

2 BEAM DETAIL - ROOF
SCALE 1-1/2" = 1'- 0"

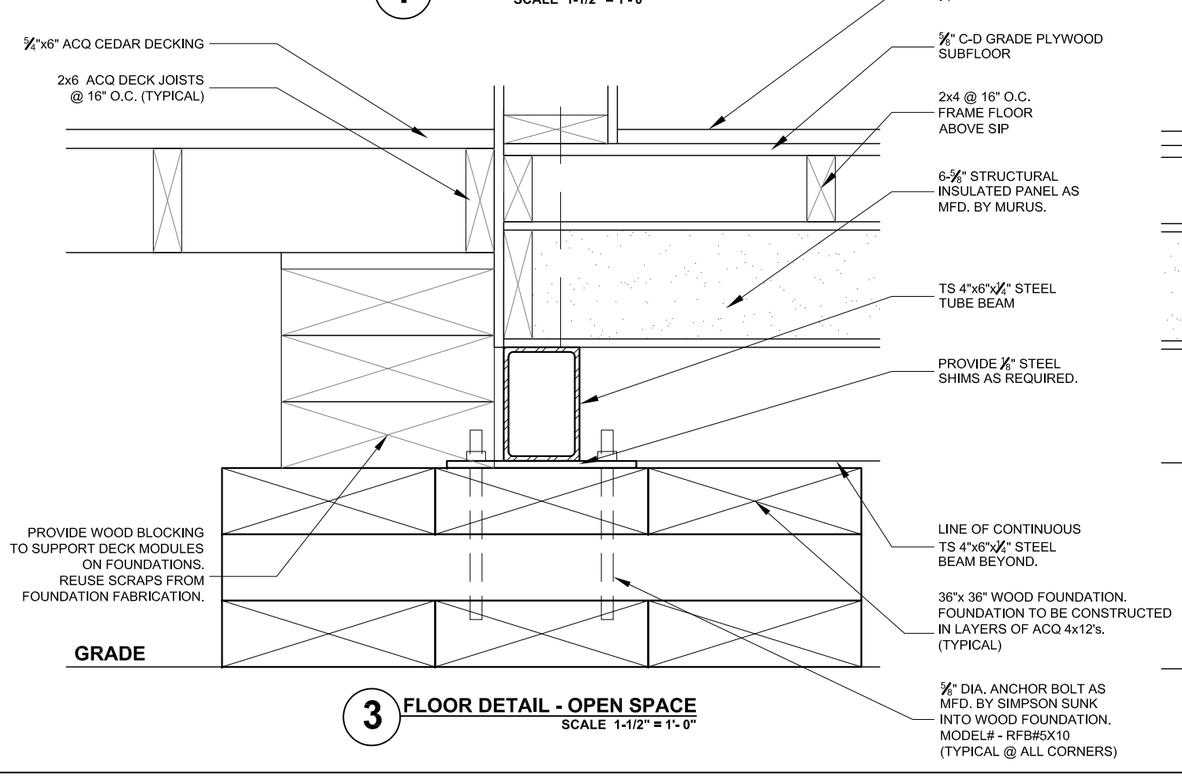

3 FLOOR DETAIL - OPEN SPACE
SCALE 1-1/2" = 1'- 0"

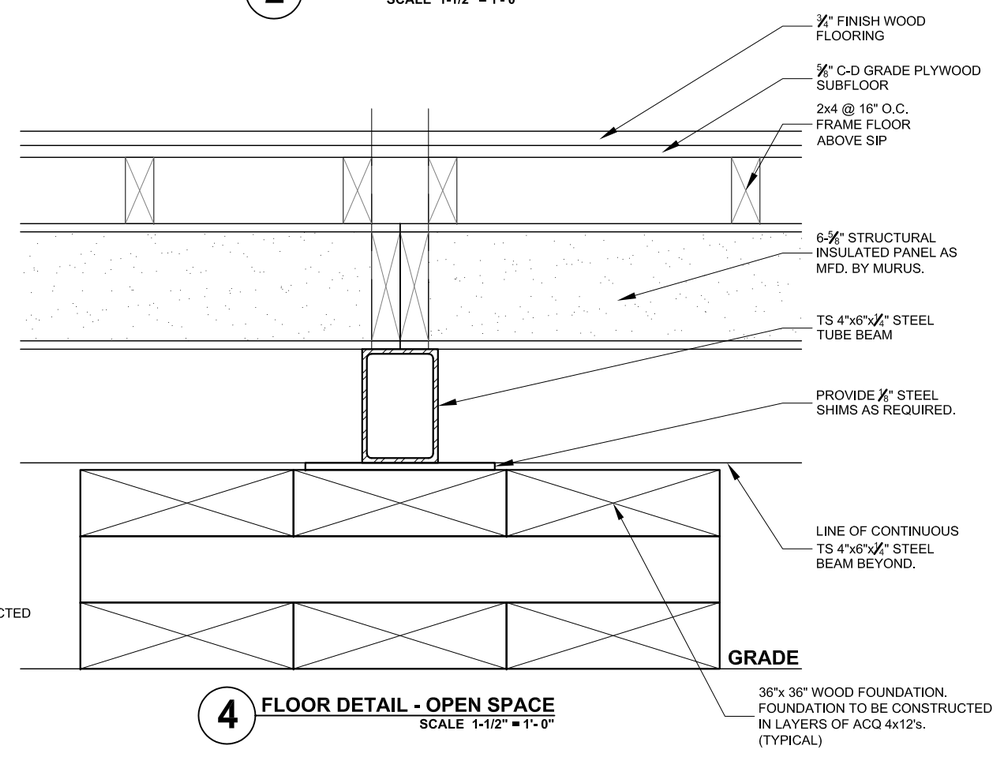

4 FLOOR DETAIL - OPEN SPACE
SCALE 1-1/2" = 1'- 0"

OPEN House

New York Institute of Technology
NORTHERN BLVD., OLD WESTBURY, NY 11568
TEL: 516-686-7659 FAX: 516-686-7921

Solar Decathlon 2007

CONSTRUCTION DOCUMENTS

TITLE: **STRUCTURAL DETAILS**

Scale: 1-½" = 1' - 0"
Date: August 7th, 2007
Drawn By: MAF
Checked By: MM

REVISIONS

No.	Date:	Description:
1	06.13.06	Design Development Drawings
2	03.06.07	Construction Drawings Rev. 1
3	08.07.07	Construction Drawings Rev. 2

DRAWING:

S 2.2

SHEET: 46 of 66

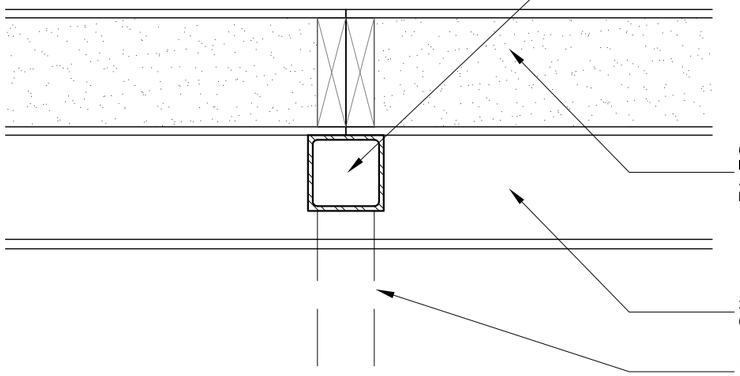

1 ROOF DETAIL - CORE
SCALE 1-1/2" = 1'- 0"

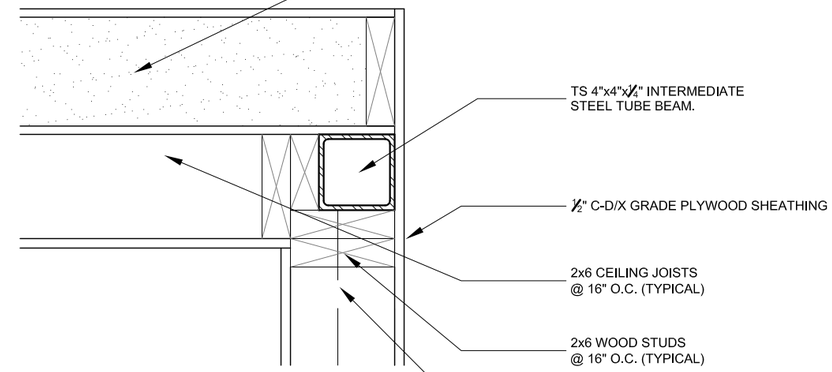

2 ROOF DETAIL - CORE
SCALE 1-1/2" = 1'- 0"

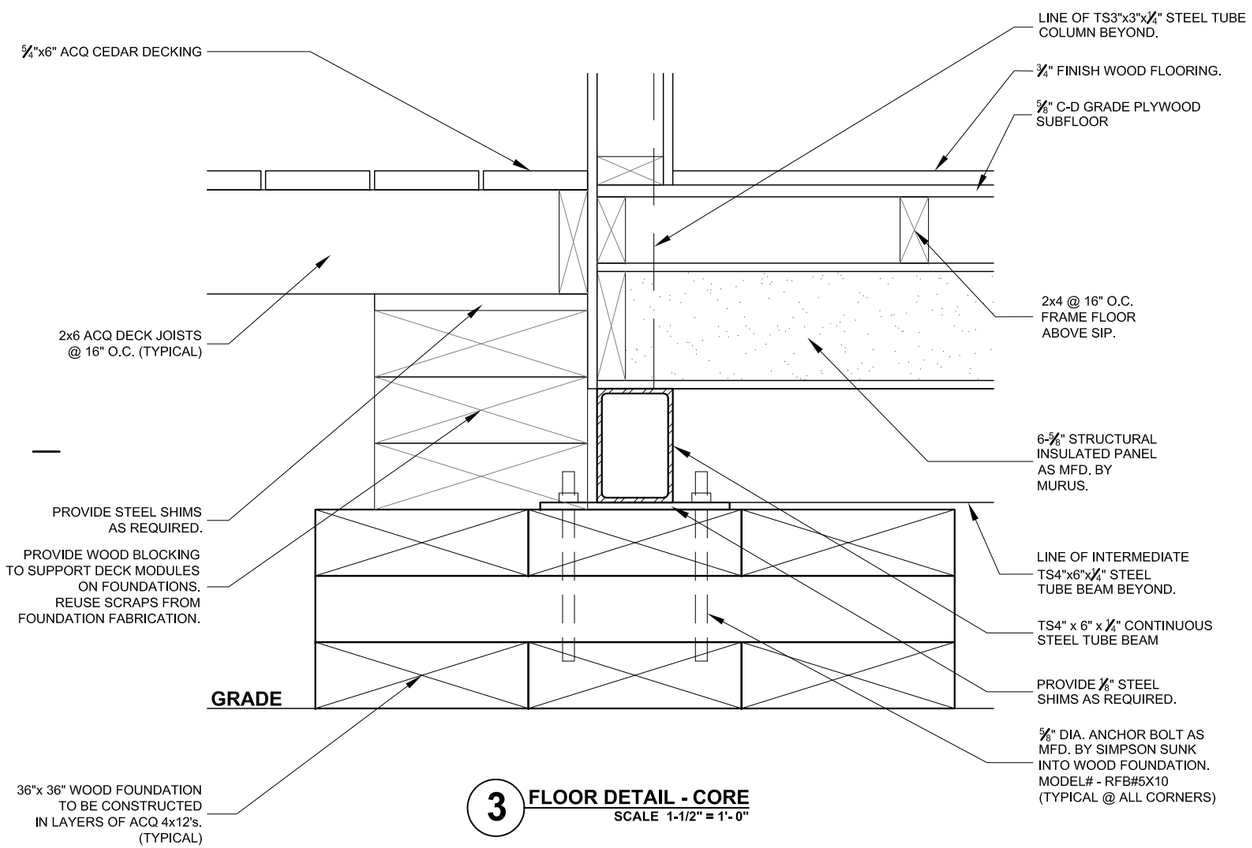

3 FLOOR DETAIL - CORE
SCALE 1-1/2" = 1'- 0"

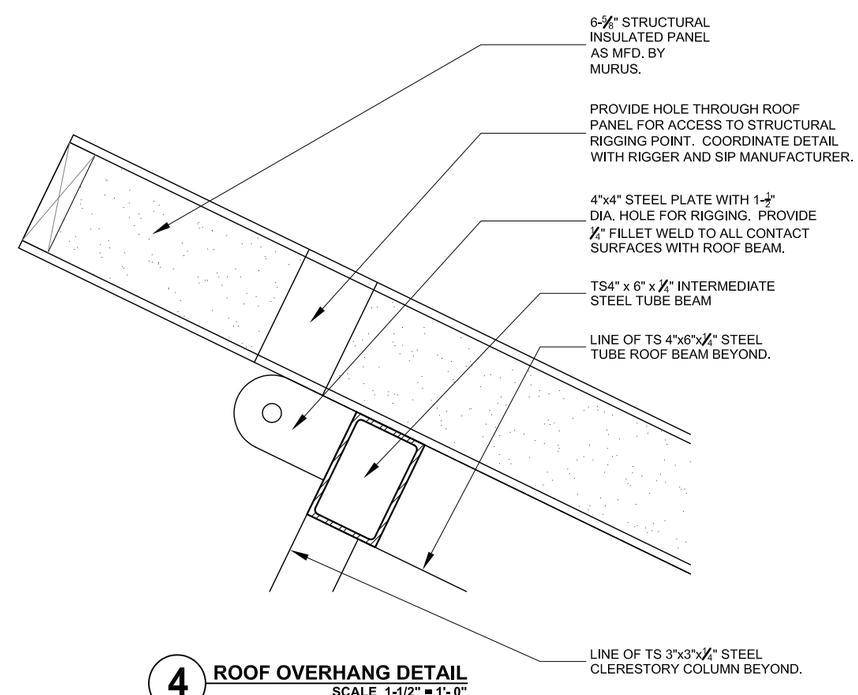

4 ROOF OVERHANG DETAIL
SCALE 1-1/2" = 1'- 0"

OPEN House

New York Institute of Technology
NORTHERN BLVD., OLD WESTBURY, NY 11568
TEL: 516-686-7659 FAX: 516-686-7921

Solar Decathlon 2007

CONSTRUCTION DOCUMENTS

TITLE: **STRUCTURAL DETAILS**

Scale: 1-½" = 1' - 0"
Date: August 7th, 2007
Drawn By: MAF
Checked By: MM

REVISIONS

No.	Date:	Description:
1	06.13.06	Design Development Drawings
2	03.06.07	Construction Drawings Rev. 1
3	08.07.07	Construction Drawings Rev. 2

DRAWING:

S 2.3

SHEET: 47 of 66

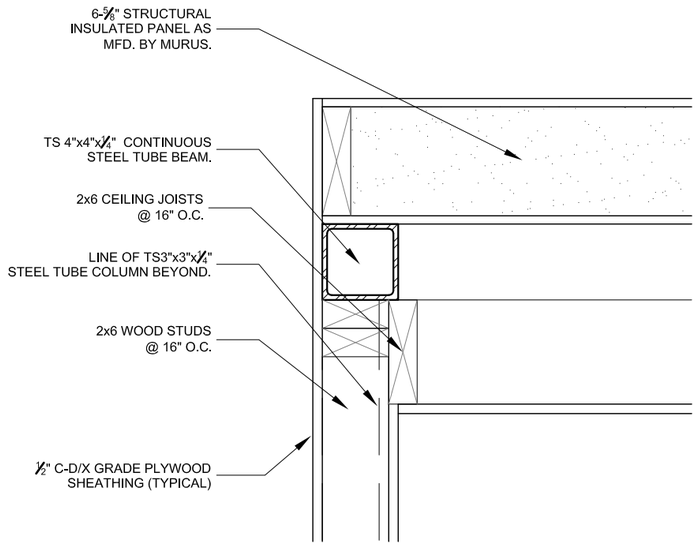

1 ROOF DETAIL - CORE
SCALE 1-1/2" = 1'- 0"

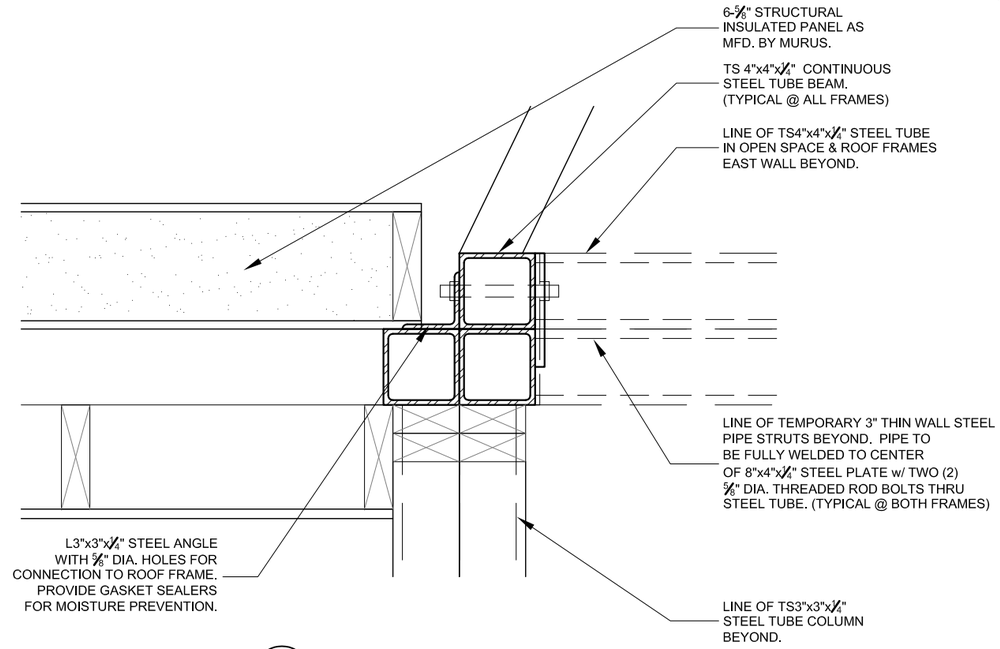

2 FRAME CONNECTION DETAIL
SCALE 1-1/2" = 1'- 0"

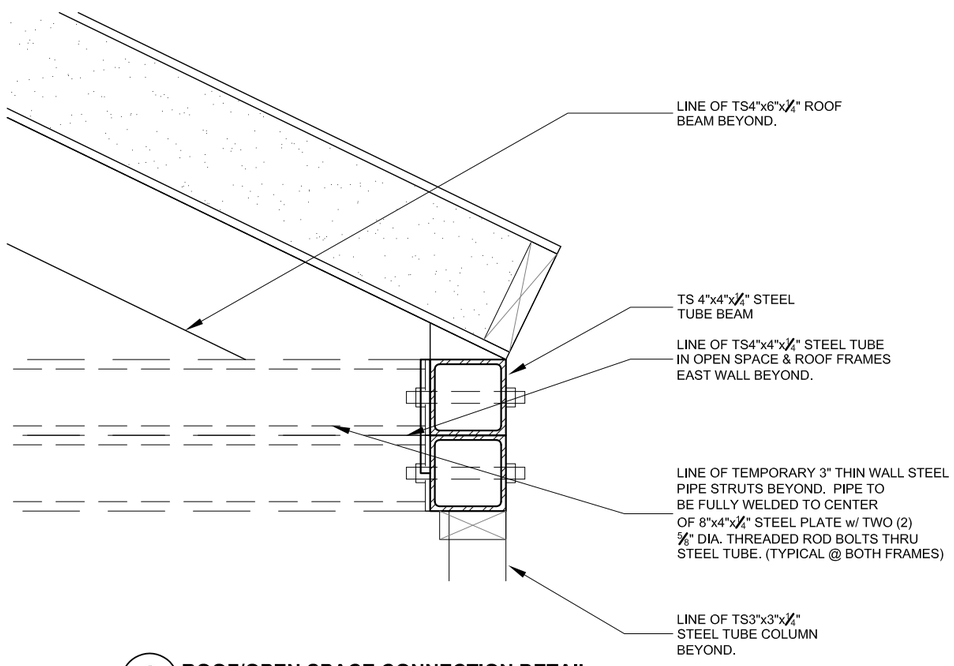

3 ROOF/OPEN SPACE CONNECTION DETAIL
SCALE 1-1/2" = 1'- 0"

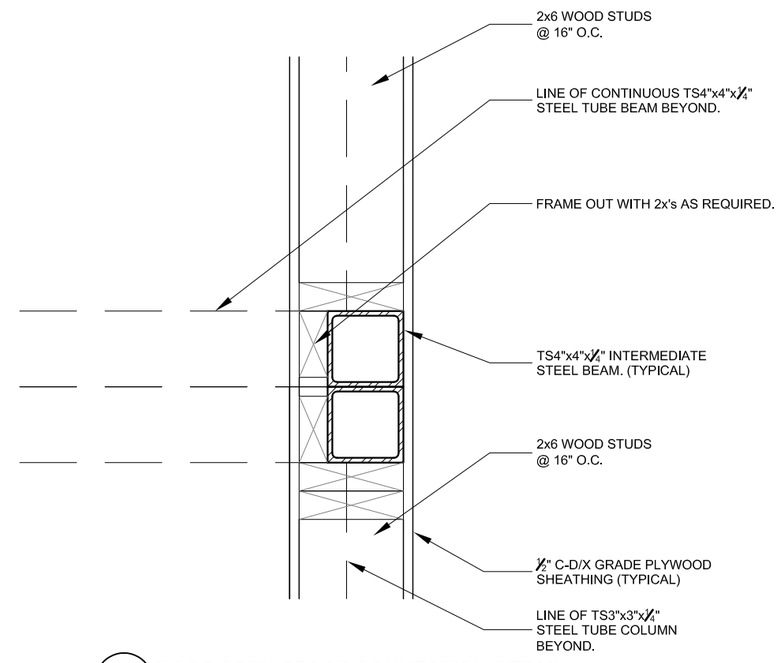

4 ROOF/OPEN SPACE CONNECTION DETAIL
SCALE 1-1/2" = 1'- 0"

OPEN House

New York Institute of Technology
NORTHERN BLVD., OLD WESTBURY, NY 11568
TEL: 516-686-7659 FAX: 516-686-7921

Solar Decathlon 2007

CONSTRUCTION DOCUMENTS

TITLE: **STRUCTURAL DETAILS**

Scale: 1-1/2" = 1' - 0"
Date: August 7th, 2007
Drawn By: MAF
Checked By: MM

REVISIONS

No.	Date:	Description:
1	06.13.06	Design Development Drawings
2	03.06.07	Construction Drawings Rev. 1
3	08.07.07	Construction Drawings Rev. 2

DRAWING:

S 2.4

SHEET: 48 of 56

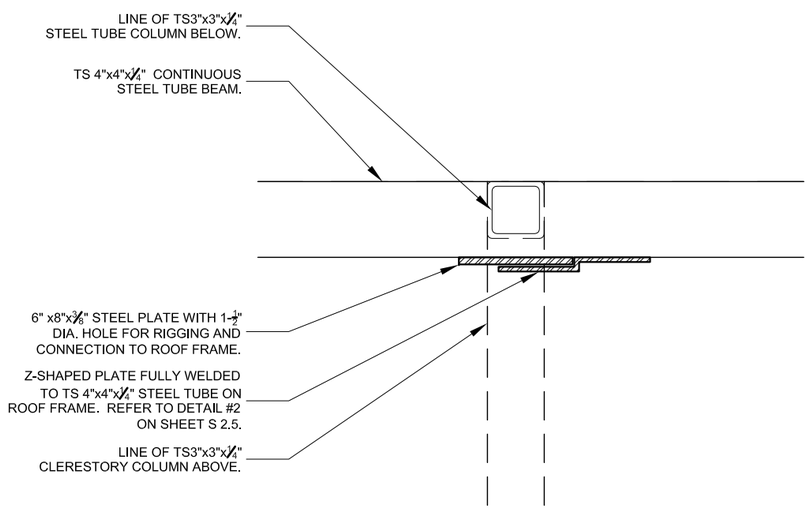

1 PLAN DETAIL - OPEN SPACE
SCALE 1-1/2" = 1'- 0"

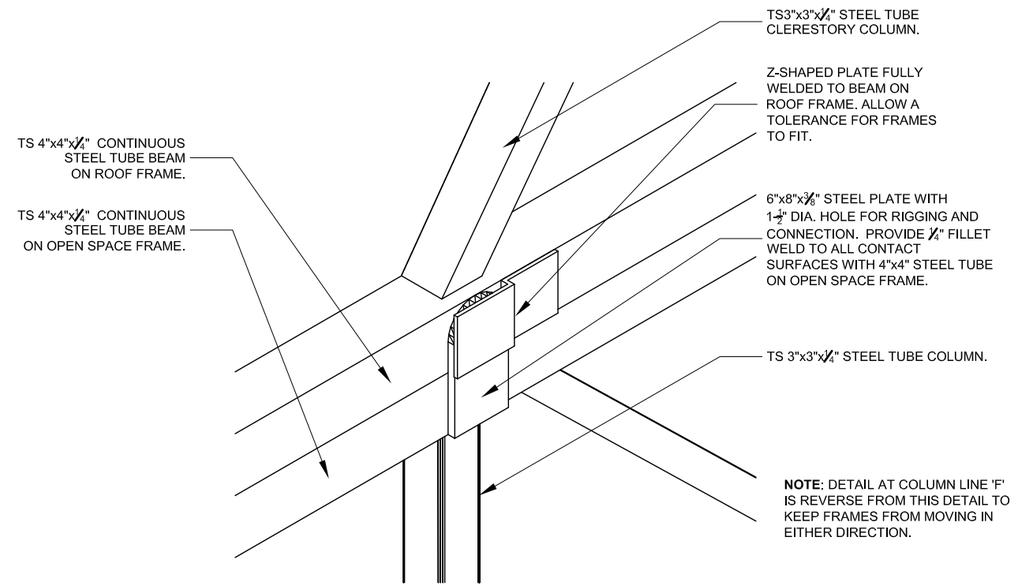

2 FRAME CONNECTION DETAIL
SCALE 1-1/2" = 1'- 0"

OPEN House

New York Institute of Technology
NORTHERN BLVD., OLD WESTBURY, NY 11568
TEL: 516-686-7659 FAX: 516-686-7921

Solar Decathlon 2007

CONSTRUCTION DOCUMENTS

TITLE: **STRUCTURAL DETAILS**

Scale: 1-½" = 1' - 0"

Date: August 7th, 2007

Drawn By: MAF

Checked By: MM

REVISIONS

No.	Date:	Description:
1	06.13.06	Design Development Drawings
2	03.06.07	Construction Drawings Rev. 1
3	08.07.07	Construction Drawings Rev. 2

DRAWING:

S 2.5

SHEET: 49 of 66

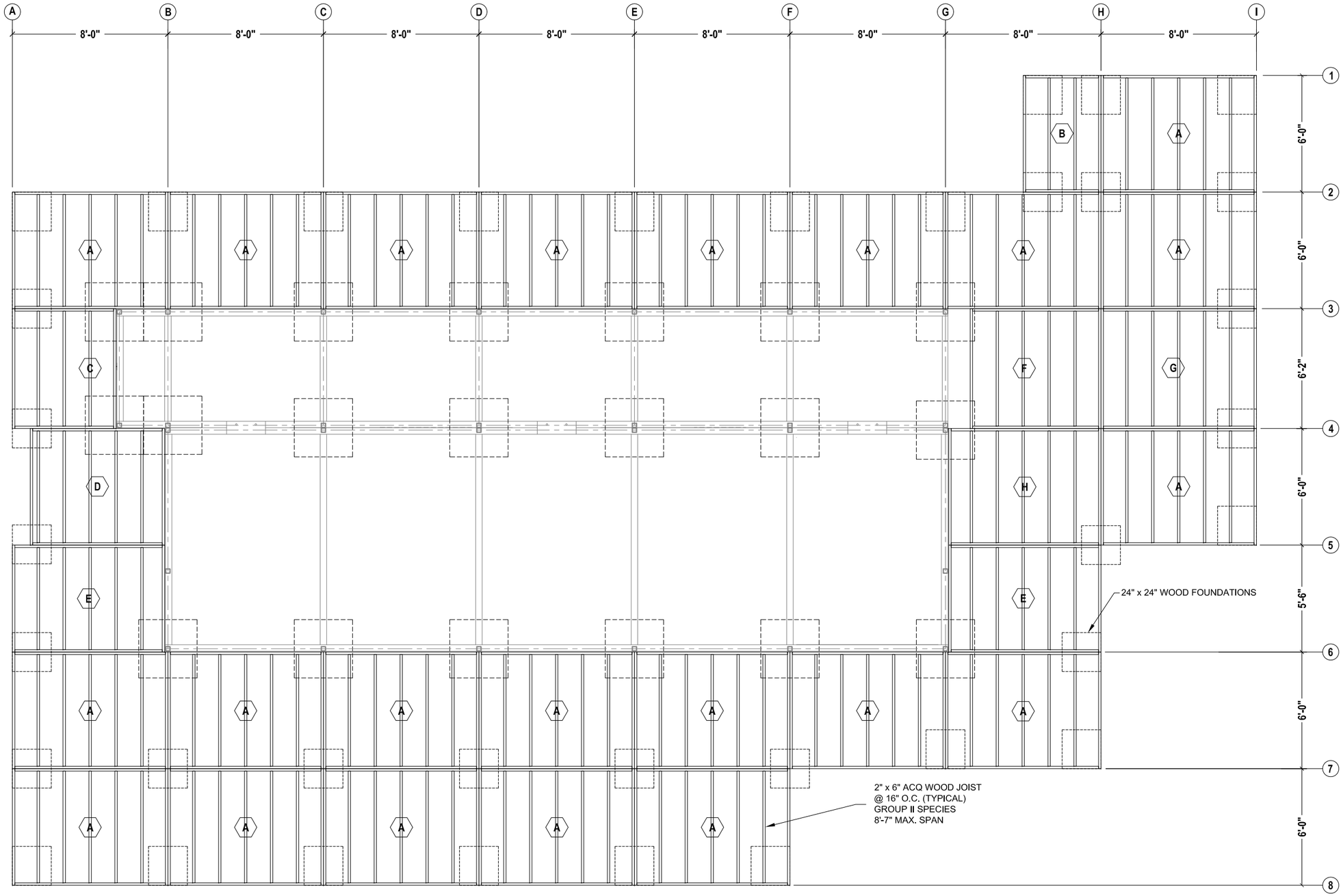

DECK FRAMING PLAN

SCALE 3/16" = 1'- 0"

0 2' 4' 8'

OPEN House

New York Institute of Technology

NORTHERN BLVD., OLD WESTBURY, NY 11568
TEL: 516-686-7659 FAX: 516-686-7921

Solar Decathlon 2007

CONSTRUCTION DOCUMENTS

TITLE: **DECK FRAMING PLAN**

Scale: 3/16" = 1' - 0"

Date: August 7th, 2007

Drawn By: JEC

Checked By: MM

REVISIONS

No.	Date:	Description:
1	06.13.06	Design Development Drawings
2	03.06.07	Construction Drawings Rev. 1
3	08.07.07	Construction Drawings Rev. 2

DRAWING:

S 3.1

SHEET: 50 of 66

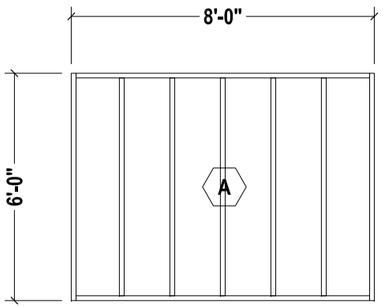

FRAMING PLAN-MODULE "A"
SCALE 1/4" = 1'- 0"

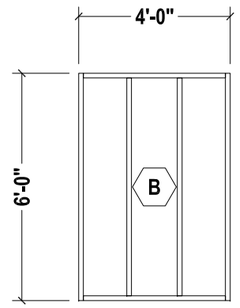

FRAMING PLAN-MODULE "B"
SCALE 1/4" = 1'- 0"

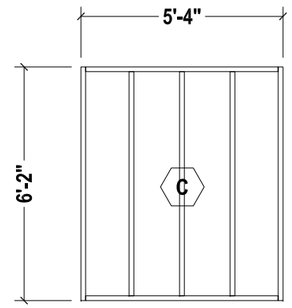

FRAMING PLAN-MODULE "C"
SCALE 1/4" = 1'- 0"

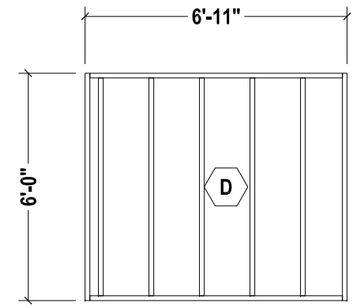

FRAMING PLAN-MODULE "D"
SCALE 1/4" = 1'- 0"

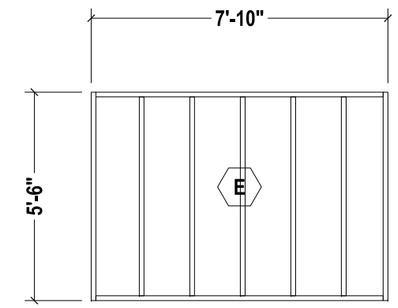

FRAMING PLAN-MODULE "E"
SCALE 1/4" = 1'- 0"

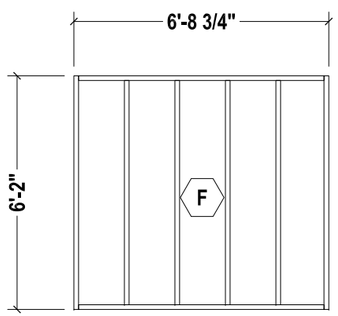

FRAMING PLAN-MODULE "F"
SCALE 1/4" = 1'- 0"

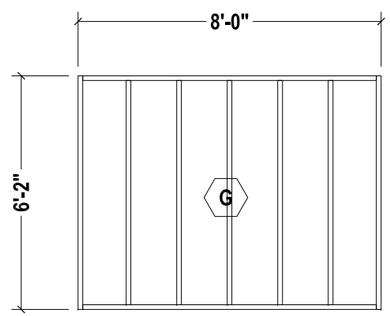

FRAMING PLAN-MODULE "G"
SCALE 1/4" = 1'- 0"

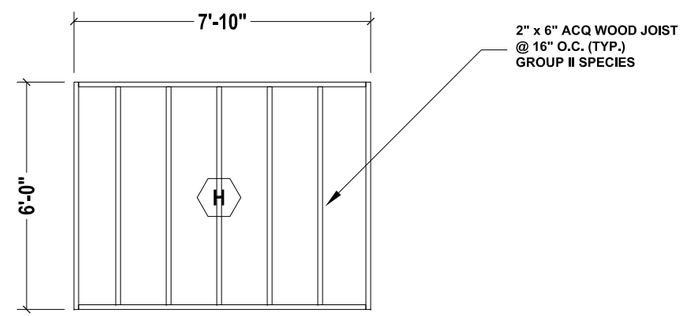

FRAMING PLAN-MODULE "H"
SCALE 1/4" = 1'- 0"

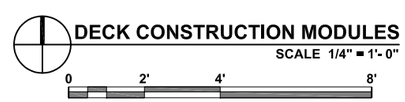

DECK CONSTRUCTION MODULES
SCALE 1/4" = 1'- 0"

OPEN House

New York Institute of Technology
NORTHERN BLVD., OLD WESTBURY, NY 11568
TEL: 516-686-7659 FAX: 516-686-7921

Solar Decathlon 2007

CONSTRUCTION DOCUMENTS

TITLE: DECK CONSTRUCTION MODULES

Scale: 1/4" = 1' - 0"

Date: August 7th, 2007

Drawn By: JEC

Checked By: MM

REVISIONS

No.	Date:	Description:
1	06.13.06	Design Development Drawings
2	03.06.07	Construction Drawings Rev. 1
3	08.07.07	Construction Drawings Rev. 2

DRAWING:

S 3.2

SHEET: 51 of 66

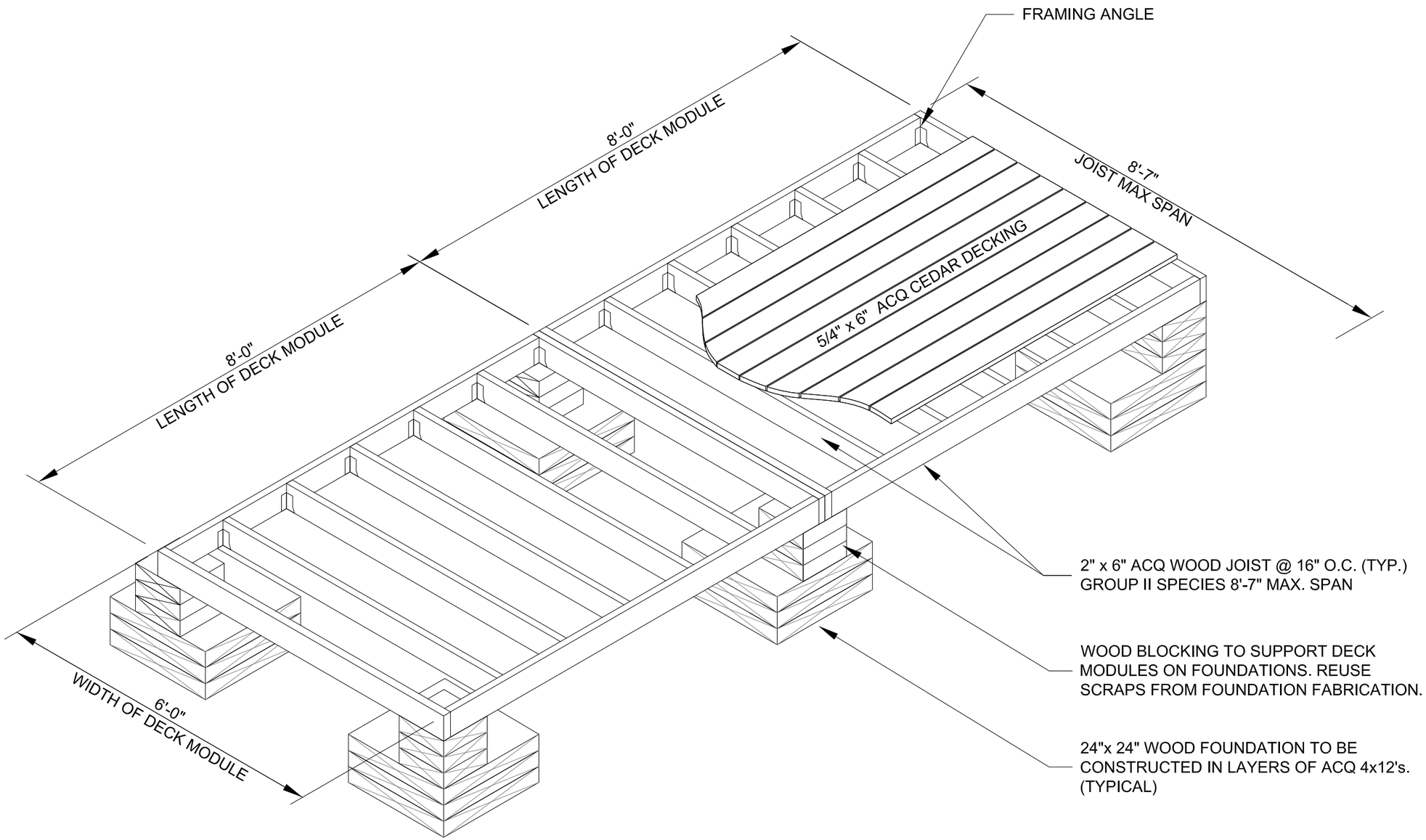

TYPICAL DECK MODULE DETAIL
SCALE 1/2" = 1'- 0"

0 2' 4'

OPEN House

New York Institute of Technology
NORTHERN BLVD., OLD WESTBURY, NY 11568
TEL: 516-686-7659 FAX: 516-686-7921

Solar Decathlon 2007

CONSTRUCTION DOCUMENTS

TITLE: **TYPICAL DECK MODULE DETAIL**

Scale: 1/2" = 1' - 0"

Date: August 7th, 2007

Drawn By: JEC

Checked By: MM

REVISIONS

No.	Date:	Description:
1	06.13.06	Design Development Drawings
2	03.06.07	Construction Drawings Rev. 1
3	08.07.07	Construction Drawings Rev. 2

DRAWING:

S 3.3

SHEET: 52 of 66

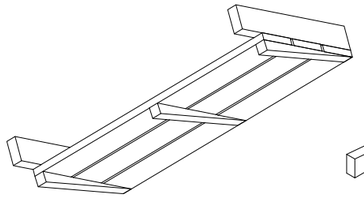

END RAMP ASSEMBLY
BOTTOM VIEW

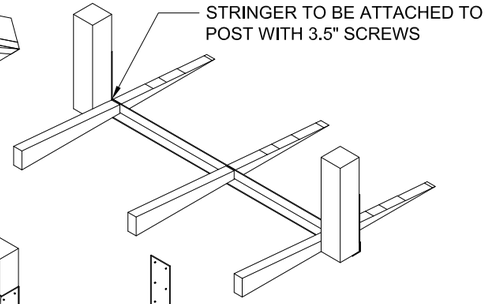

STRINGER AND POST LAYOUT

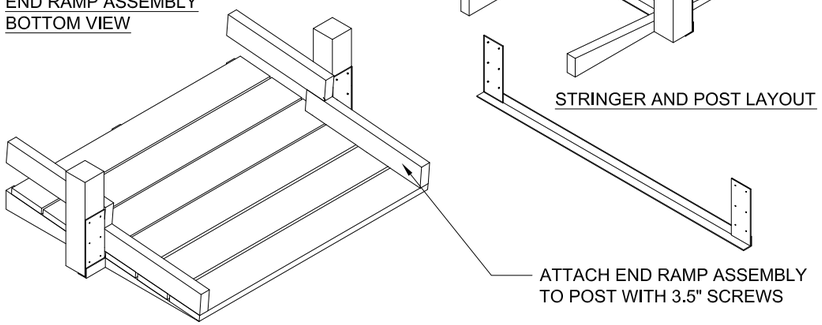

COMPLETE END RAMP

END POST BRACKET

END RAMP ASSEMBLY
SCALE 1/2" = 1'- 0"

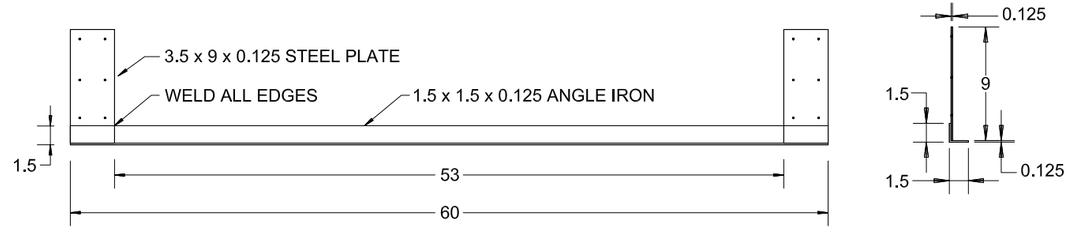

END POST BRACKET

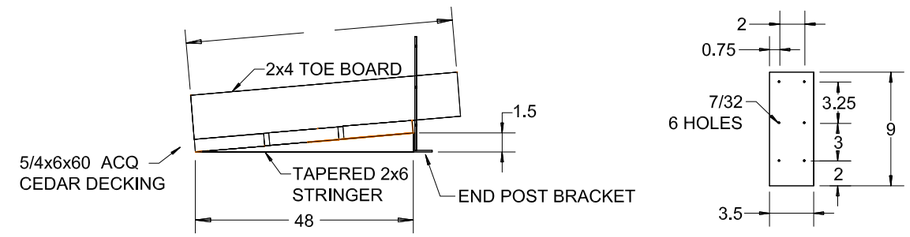

END RAMP ASSEMBLY

END RAMP ASSEMBLY
SCALE 1" = 1'- 0"

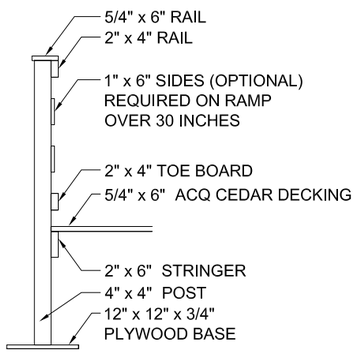

POST DETAIL

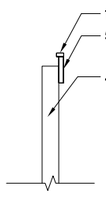

ALTERNATE RAILING

WOOD POST DETAIL
SCALE 3/8" = 1'- 0"

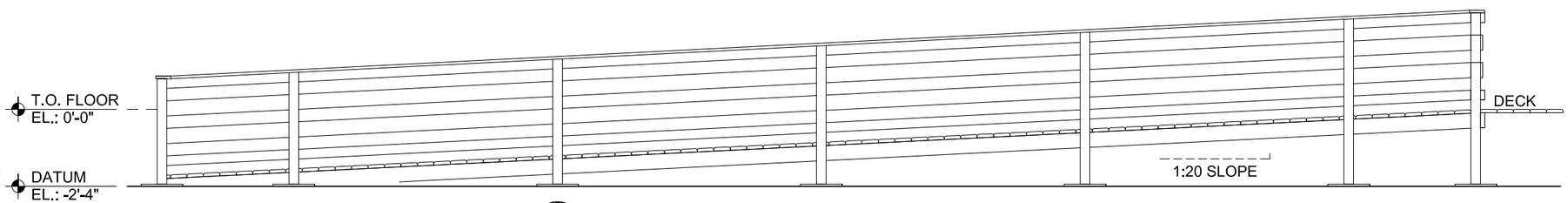

RAMP SIDE ELEVATION
SCALE 1/4" = 1'- 0"

0 2' 4' 8'

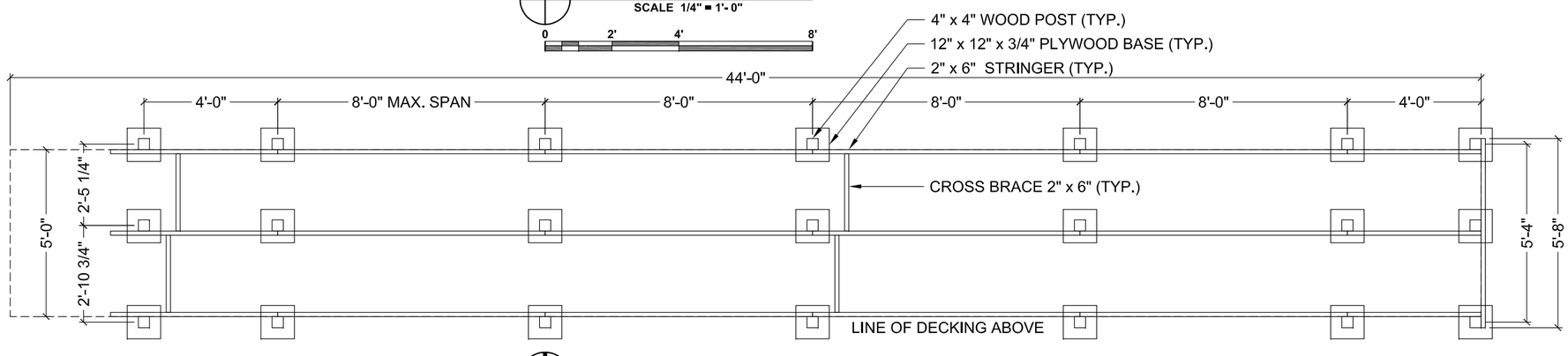

RAMP FRAME PLAN
SCALE 1/4" = 1'- 0"

0 2' 4' 8'

OPEN House

New York Institute of Technology
NORTHERN BLVD., OLD WESTBURY, NY 11568
TEL: 516-686-7659 FAX: 516-686-7921

Solar Decathlon 2007

CONSTRUCTION DOCUMENTS

TITLE: **RAMP ASSEMBLY& RAILING DETAILS**

Scale: AS NOTED

Date: August 7th, 2007

Drawn By: JEC

Checked By: MM

REVISIONS

No.	Date:	Description:
1	06.13.06	Design Development Drawings
2	03.06.07	Construction Drawings Rev. 1
3	08.07.07	Construction Drawings Rev. 2

DRAWING:

S 3.4

SHEET: 53 of 66

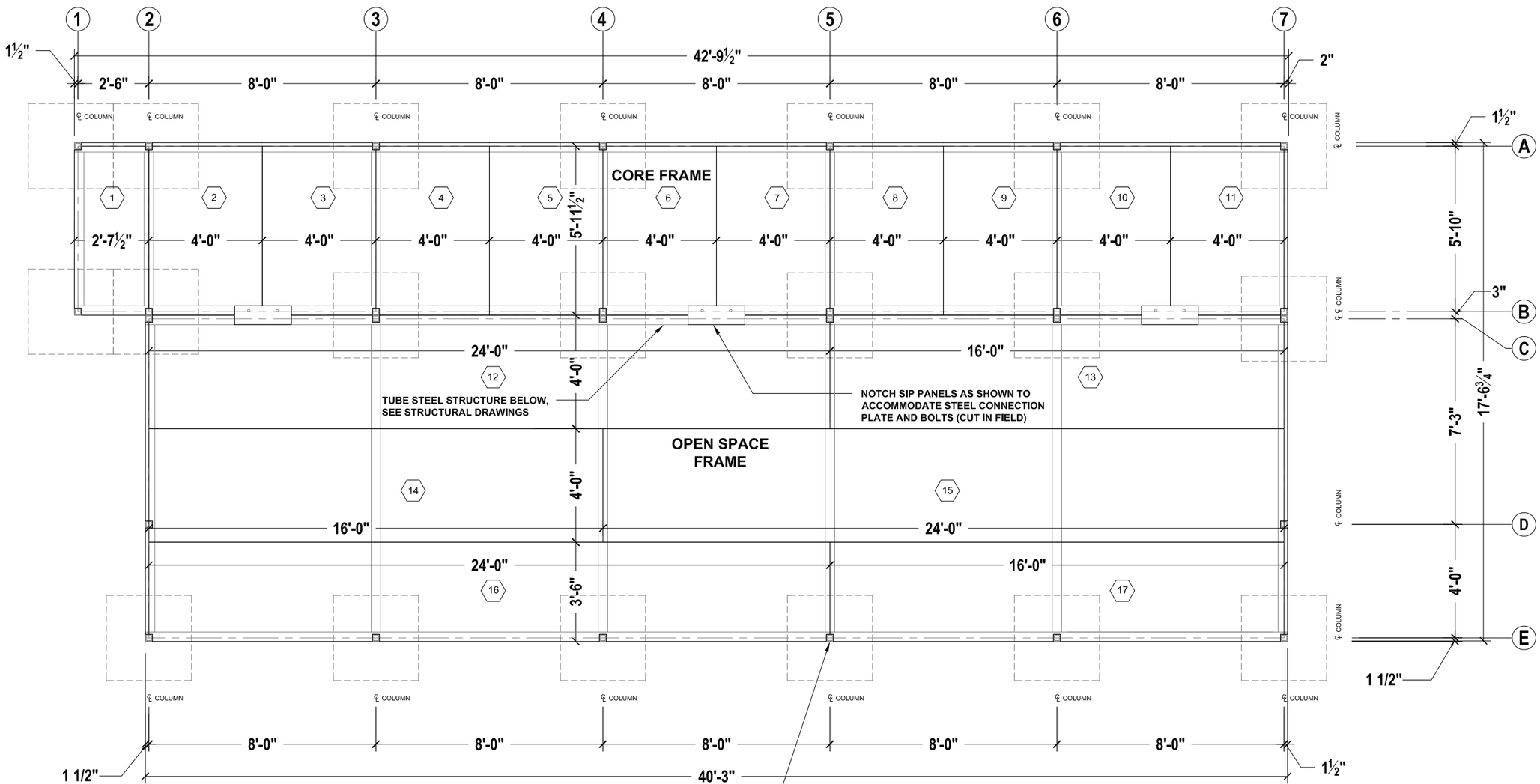

LAYOUT REVISED AS PER SHOP DRAWINGS BY THE MURUS COMPANY DATED 5 / 7 / 07.

FLOOR SIP LAYOUT PLAN

SCALE 1/4" = 1'- 0"

0 2' 4' 8'

OPEN House

New York Institute of Technology
NORTHERN BLVD., OLD WESTBURY, NY 11568
TEL: 516-686-7659 FAX: 516-686-7921

Solar Decathlon 2007

CONSTRUCTION DOCUMENTS

TITLE: SIP LAYOUT - FLOOR

Scale: 1/4" = 1' - 0"

Date: August 7th, 2007

Drawn By: MAF

Checked By: MM

REVISIONS

No.	Date:	Description:
1	06.13.06	Design Development Drawings
2	03.06.07	Construction Drawings Rev. 1
3	08.07.07	Construction Drawings Rev. 2

DRAWING:

S 4.1

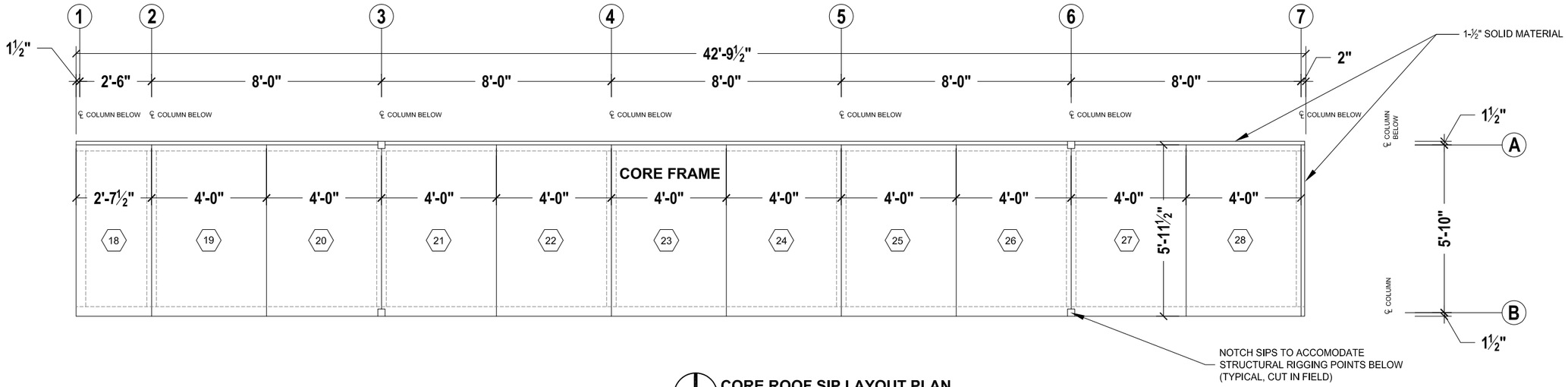

CORE ROOF SIP LAYOUT PLAN

SCALE 1/4" = 1'- 0"

0 2' 4' 8'

NOTE: REFER TO SECTION ON SHEET S 1.5 FOR ANGLE OF ROOF SIPS.

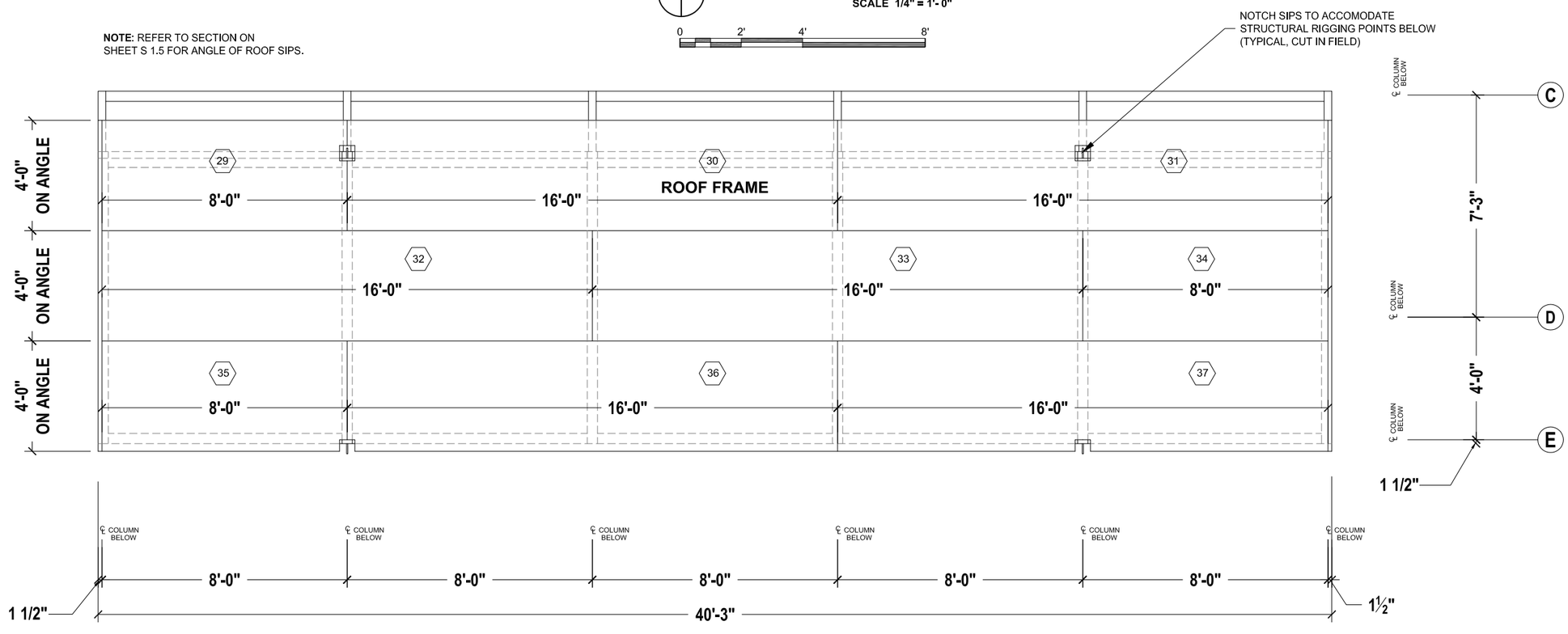

ROOF FRAME SIP LAYOUT PLAN

SCALE 1/4" = 1'- 0"

0 2' 4' 8'

REVISED AS PER SHOP DRAWINGS BY THE MURUS COMPANY DATED 5 / 7 / 07.

OPENHouse

New York Institute of Technology
NORTHERN BLVD., OLD WESTBURY, NY 11568
TEL: 516-686-7659 FAX: 516-686-7921

Solar Decathlon 2007

CONSTRUCTION DOCUMENTS

TITLE: SIP LAYOUT - ROOF

Scale: 1/4" = 1' - 0"

Date: August 7th, 2007

Drawn By: MAF

Checked By: MM

REVISIONS

No.	Date:	Description:
1	06.13.06	Design Development Drawings
2	03.06.07	Construction Drawings Rev. 1
3	08.07.07	Construction Drawings Rev. 2

DRAWING:

S 4.2

SHEET: 55 of 66

GENERAL NOTES

1. THIS PHOTOVOLTAIC SYSTEM IS TO BE INSTALLED FOLLOWING THE CONVENTIONS OF THE NATIONAL ELECTRIC CODE. ANY LOCAL CODE, WHICH MAY SUPERCEDE, SHALL GOVERN.
2. ALL COMPONENTS TO BE INSTALLED IN THIS SYSTEM SHALL BE 'UL' LISTED.
3. THE DC-AC INVERTER SHALL MEET THE PROVISIONS OF IEEE-929 AND BE LISTED TO UNDERWRITERS LABRATORIES STANDARD UL-1741.5. DC VOLTAGE FROM THE ARRAY IS ALWAYS PRESENT AT THE DISCONNECT AND THE DC TERMINALS OF THE INVERTER DURING DAYLIGHT HOURS.
4. ALL PERSONS WORKING ON OR INVOLVED WITH THIS PHOTOVOLTAIC SYSTEM ARE WARNED THAT THE SOLAR MODULES ARE ENERGIZED WHENEVER THEY ARE EXPOSED TO SUNLIGHT. LIVE WIRING SAFETY AND CAUTIONARY PRACTICES CHOULD BE EMPLOYED DURING INSTALLATION AND MAINTENANCE OPERATIONS.
5. LABELING SHALL BE APPLIED ACCORDING TO THE NEC AND SHALL INCLUDE BUT NOT BE LIMITED TO THE FOLLOWING:
   DC DISCONNECT
   AC DISCONNECT
6. During Competition, AC Disconnect will be locked open.
7. All equipment to be grounded & bonded by #6 solid to 15' copper grounding rod for competition.

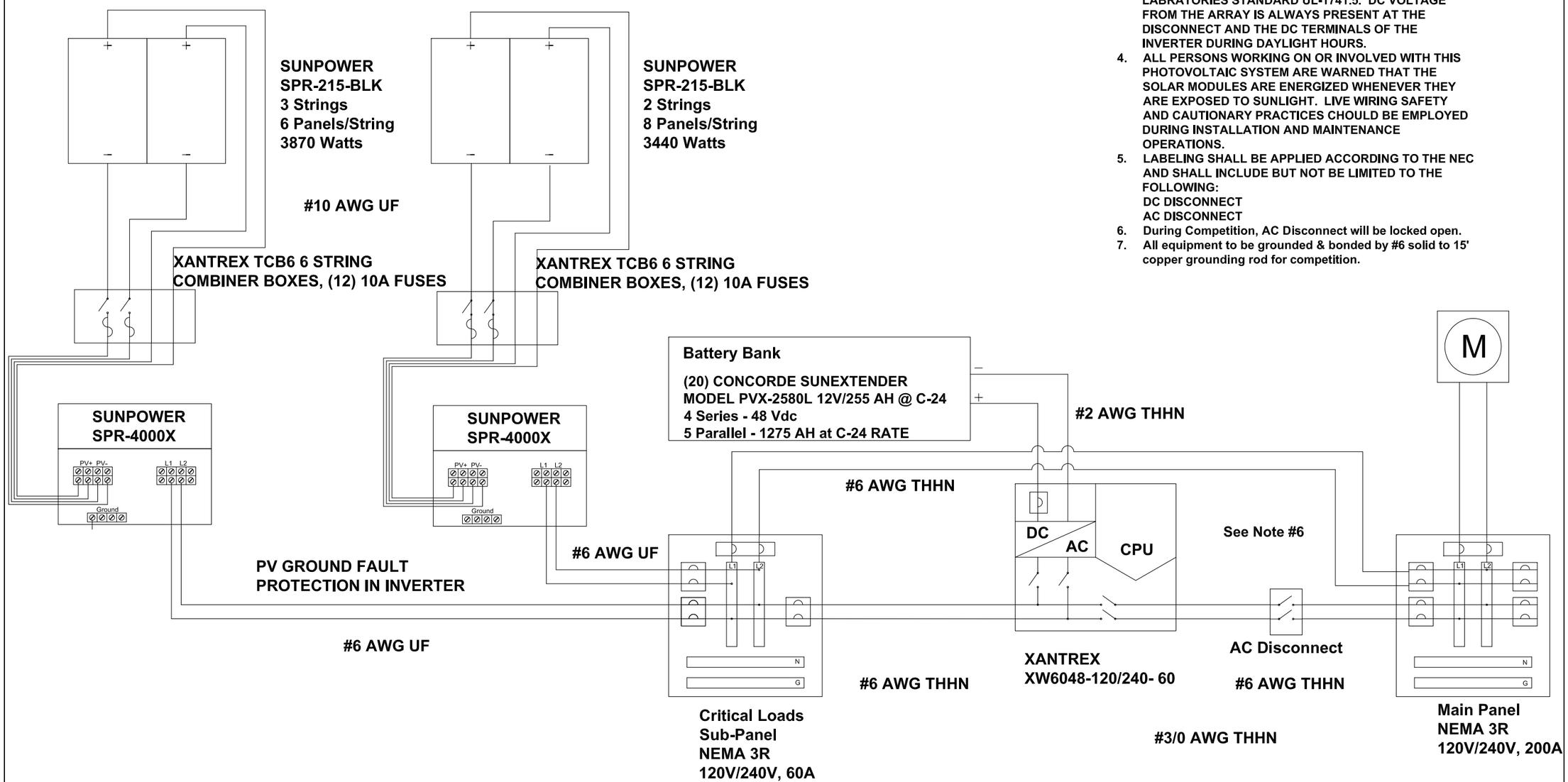

1 PV WIRING DIAGRAM
SCALE: n.t.s.

OPEN House

New York Institute of Technology
NORTHERN BLVD., OLD WESTBURY, NY 11568
TEL: 516-686-7659 FAX: 516-686-7921

Solar Decathlon 2007

CONSTRUCTION DOCUMENTS

TITLE: PV WIRING DIAGRAM

Scale: NOT TO SCALE
Date: August 7th, 2007
Drawn By: DR
Checked By: MM

REVISIONS

No.	Date:	Description:
1	06.13.06	Design Development Drawings
2	03.06.07	Construction Drawings Rev. 1
3	08.07.07	Construction Drawings Rev. 2

DRAWING:

E 1.1

SHEET: 56 of 66

SYMBOL	DESCRIPTION	SYMBOL	DESCRIPTION	SYMBOL	DESCRIPTION
S	SINGLE POLE SWITCH		120V DUPLEX RECEPTACLE		UNDER CABINET FLUORESCENT - 48"
S_d	SINGLE POLE DIMMER SWITCH		240V RECEPTACLE		UNDER CABINET FLUORESCENT - 24"
S_3	3-WAY SWITCH	GFI	120V RECEPTACLE WITH GROUND FAULT INTERRUPT		RECESSED FLOURESCENT - 36"
S_{3d}	3-WAY SWITCH WITH DIMMER	ARCI	120V RECEPTACLE WITH ARC FAULT CIRCUIT INTERRUPT		SURFACE MOUNTED COMPACT FLUORESCENT - 6"
S_4	4-WAY SWITCH		120 V FLOOR RECEPTACLE		RECESSED LED - 6"
S_{dc}	DIGITAL CONTROL SWITCH	REF.	OUTLET FOR NOTED APPLIANCE		RECESSED WATER RESISTANT LED - 6"
J	JUNCTION BOX FOR DIRECT CONNECTION	S.D	HARD WIRED SMOKE DETECTOR		SURFACE MOUNTED LED - 12" SQUARE
EP	ELECTRICAL PANEL	C.D	CO2 DETECTOR		SURFACE MOUNTED SOLAR ADDRESS LIGHT

ELECTRICAL NOTES

1. PER E3801.2.2 WALL OUTLETS TYP. 12'0" O.C.

2. PER E38012.2 WALL OUTLETS LOCATED IN ANY SPACE MORE THAN 2'-0" WIDE

3. PER E3801.7 OUTDOOR OUTLETS ACCESSIBLE AT GRADE INSTALLED AT FRONT AND BACK OF DWELLING UNIT

4. PER E3802.3 OUTDOOR OUTLETS GFI

5. PER E3802.11 BEDROOM OUTLETS TO BE ARC FAULT CIRCUIT INTERRUPTED PER E3803.3 ONE WALL CONTROLLED LIGHTING OUTLET ON EXTERIOR SIDE OF EACH OUTDOOR EGRESS DOOR

6. KITCHEN COUNTERTOP OUTLETS CONFORM TO FIGURE E3801.4 AND ARE GFI PER E3802.6

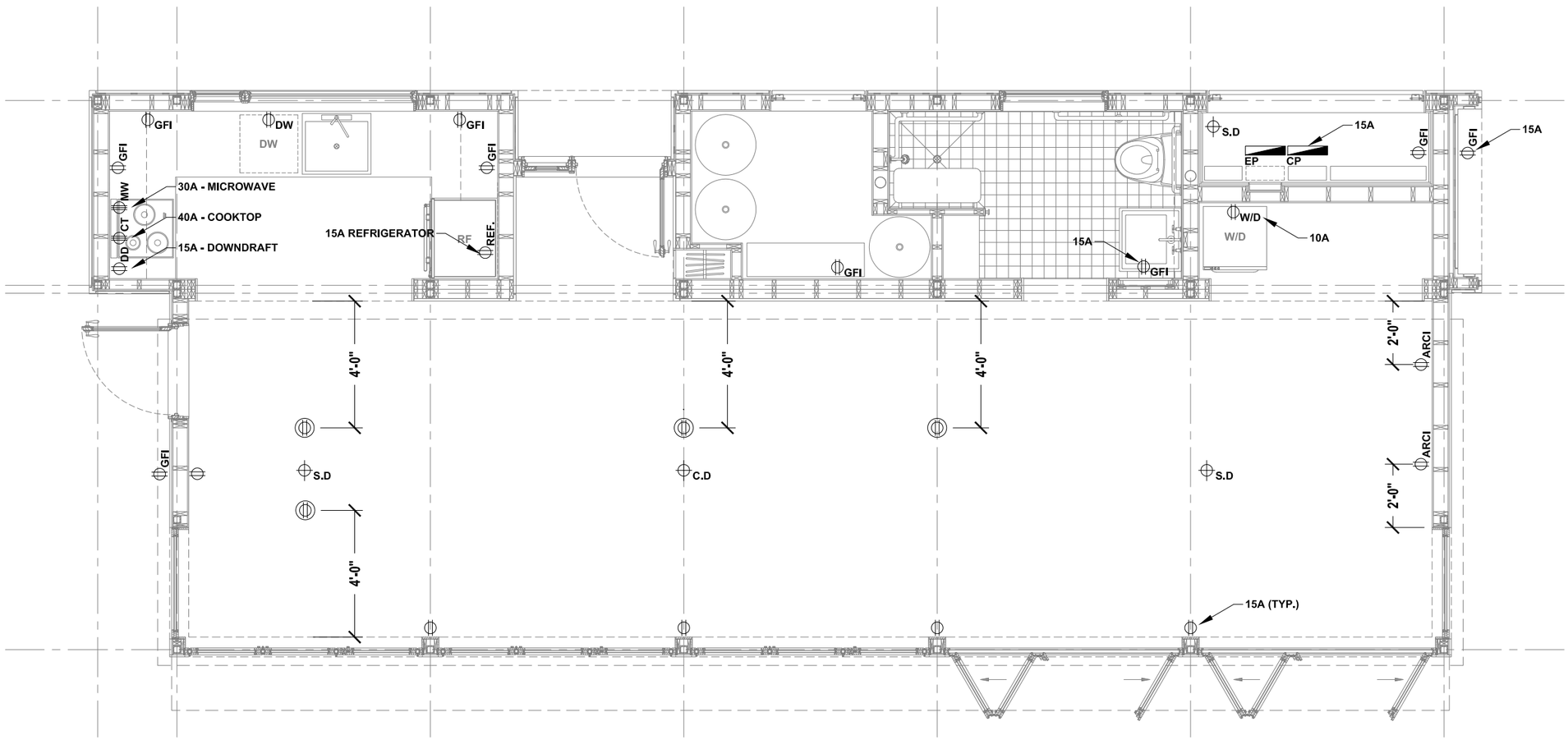

ELECTRICAL POWER PLAN

SCALE 1/4" = 1'- 0"

0 2' 4' 8'

OPEN House

New York Institute of Technology
NORTHERN BLVD., OLD WESTBURY, NY 11568
TEL: 516-686-7659 FAX: 516-686-7921

Solar Decathlon 2007

CONSTRUCTION DOCUMENTS

TITLE: ELECTRICAL POWER PLAN

Scale: 1/4" = 1' - 0"

Date: August 7th, 2007

Drawn By: MCB

Checked By: MM

REVISIONS

No.	Date:	Description:
1	03.06.07	Design Development Drawings
2	03.06.07	Construction Drawings Rev. 1
3	08.07.07	Construction Drawings Rev. 2

DRAWING:

E 1.2

SHEET: 57 of 66

REFLECTED CEILING PLAN AND SWITCHING LEGEND

Symbols	Code	Description
	F1	Cabinetry Mounted T2 Fluorescent, 24"
	F2	Cabinetry Mounted T2 Fluorescent, 48"
	F3	Surface Mounted Fluorescent, 36"
	F4	Surface Mounted Compact Fluorescent, 6"
	F5	Bathroom Mirror (sides) Fluorescent, 36"
	F6	Bathroom Mirror (top, bottom) Fluorescent, 48"
	LED 1	Recessed LED, 6"
	LED 2	Recessed Shower LED, 6"
	LED 3	Surface Mounted LED 12" square

Symbols	Code	Description
	M	Recessed Solar Address Light (exterior)
D^a		Dimmer Switch
D^f_3		Three Way Dimmer Switch
S_b		Switch
C		Digital control switch– LED 3

Dimmers d e f on three–way switch. Switches and dimmers a, b, c, g, h, j, k, l, m are single and local.

switch I.D. D^f_3 ← three way switches

switch type

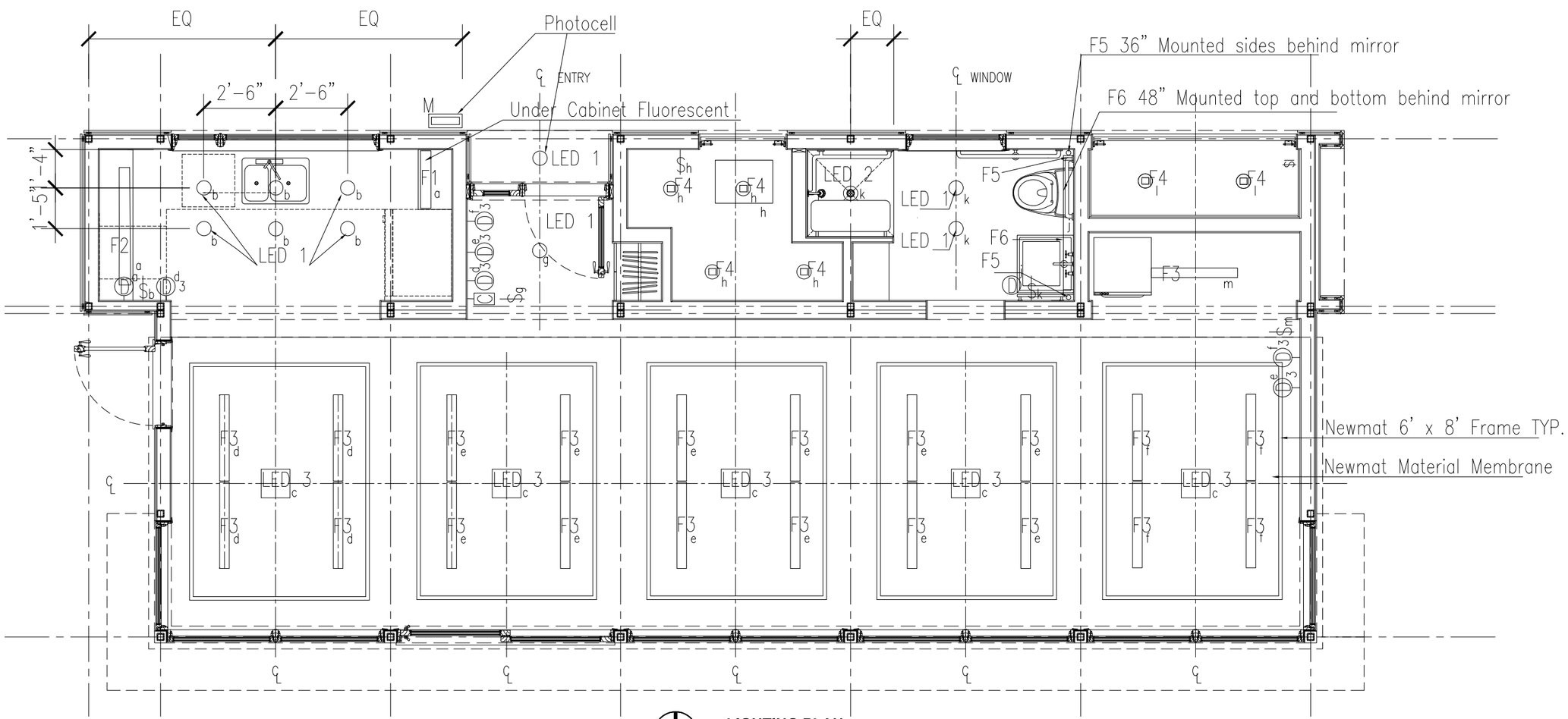

LIGHTING PLAN
SCALE 1/4" = 1'- 0"

0 2' 4' 8'

OPEN House

New York Institute of Technology
NORTHERN BLVD., OLD WESTBURY, NY 11568
TEL: 516-686-7659 FAX: 516-686-7921

Solar Decathlon 2007

CONSTRUCTION DOCUMENTS

TITLE: **LIGHTING PLAN**

Scale: 1/4" = 1' - 0"

Date: August 7th, 2007

Drawn By: MS

Checked By: MM

REVISIONS

No.	Date:	Description:
1	03.06.07	Design Development Drawings
2	03.06.07	Construction Drawings Rev. 1
3	08.07.07	Construction Drawings Rev. 2

DRAWING:

E 1.3

SHEET: 58 of 66

LOAD CENTER: EP - 200 AMP MCB 120/240V 1PH 3W 24 POLE

LOAD-KVA		LOAD DESCRIPTION	CIR.BKR		TYPE		CIR.BKR		LOAD DESCRIPTION	LOAD-KVA	
A	B		TRIP	No.			No.	TRIP		A	B
1.162		LIGHTING	20	1			2	20	SM APP/REFRIG	0.167	
	0.115	CONTROL PANEL	20	3			4	20	SM APP/FREEZER		0.167
0		RECEPTACLES BDRM.	20	5	AFCI		6	20	SM APP/HOOD FAN	0.200	
	0	RECEPTACLES GENRL.	20	7			8	20	DISHWASHER		0.600
0		BATH GFCI RECEPT.	20	9			10	20	LAUNDRY	1.300	
	0.905	MECH RM PUMPS	20	11			12	20	EXHAUST UNIT		0.156
0.123		BUFFER TANK	20	13			14	30	WATER HEATER	2.75	
	0.123			15			16				2.75
0.185		AIR HANDLER UNIT	20	17			18	40	COOK TOP	3.800	
	0.185			19			20				3.800
1.875		HEAT PUMP	30	21			22	20	SPARE		
	1.875			23			24	20	SPARE		

*(AFCI) ARC-FAULT CIRCUIT-INTERUPTER PROTECTION REQUIRED

TOTAL CONNECTED LOAD: 22.238 KVA 93 AMPS

ELECTRICAL PANEL SCHEDULE
n.t.s

OPEN House

New York Institute of Technology
NORTHERN BLVD., OLD WESTBURY, NY 11568
TEL: 516-686-7659 FAX: 516-686-7921

Solar Decathlon 2007

CONSTRUCTION DOCUMENTS

TITLE: ELECTRICAL PANEL SCHEDULE

Scale: NOT TO SCALE

Date: August 7th, 2007

Drawn By: MM

Checked By: MM

REVISIONS

No.	Date:	Description:
1	06.13.06	Design Development Drawings
2	03.06.07	Construction Drawings Rev. 1
3	08.07.07	Construction Drawings Rev. 2

DRAWING:

E 1.4

SHEET: 28 of 66

PLUMBING NOTES:

WORK INCLUDED:
FURNISH ALL LABOR, MATERIALS, EQUIPMENT, AND APPURTENANCES NECESSARY OR REQUIRED TO PERFORM AND COMPLETE ALL PLUMBING WORK SPECIFIED AND AS SHOWN ON THE DRAWINGS.

REFERENCES:
2006 INTERNATIONAL PLUMBING CODE

MATERIALS:
HOT & COLD WATER PIPING - PEX TUBING, GREY WATER PIPING - PVC TUBING, DRAIN & VENT PIPING - PVC TUBING. UNLESS INDICATED OTHERWISE.

LABELING:
ALL PIPING SHALL BE LABELED AT NOT LESS THAN 15 FOOT INTERVALS TO INDICATED CONTENTS AND DIRECTION OF FLOW. LABELS MAY BE STENCIL, ADHESIVE, OR SNAP-ON TYPE. LABELS SHALL BE COLOR-CODED, VALVE CHART SHALL BE FURNISHED.

TESTING:
1. DRAINAGE SYSTEM:
   ROUGH PLUMBING - TEST EITHER BY AIR (15 MINUTES @ 5 PSI) OR WATER (15 MINUTES FULL HEIGHT NOT LESS THAN 10 FEET VERTICAL). NO LEAKAGE PERMITTED.
2. WATER SYSTEM:
   TEST IN SECTIONS AND ON THE SYSTEM WITH WATER AT WORKING PRESSURE. NO LEAKAGE PERMITTED.
3. FLUSH ALL PIPING THOROUGHLY PRIOR TO PUTTING INTO SERVICE.

PLUMBING LEGEND:

- PUMP
- HOT WATER
- COLD WATER
- VENT
- GREY WATER
- GATE VALVE
- GAUGE
- FLOW DIRECTION

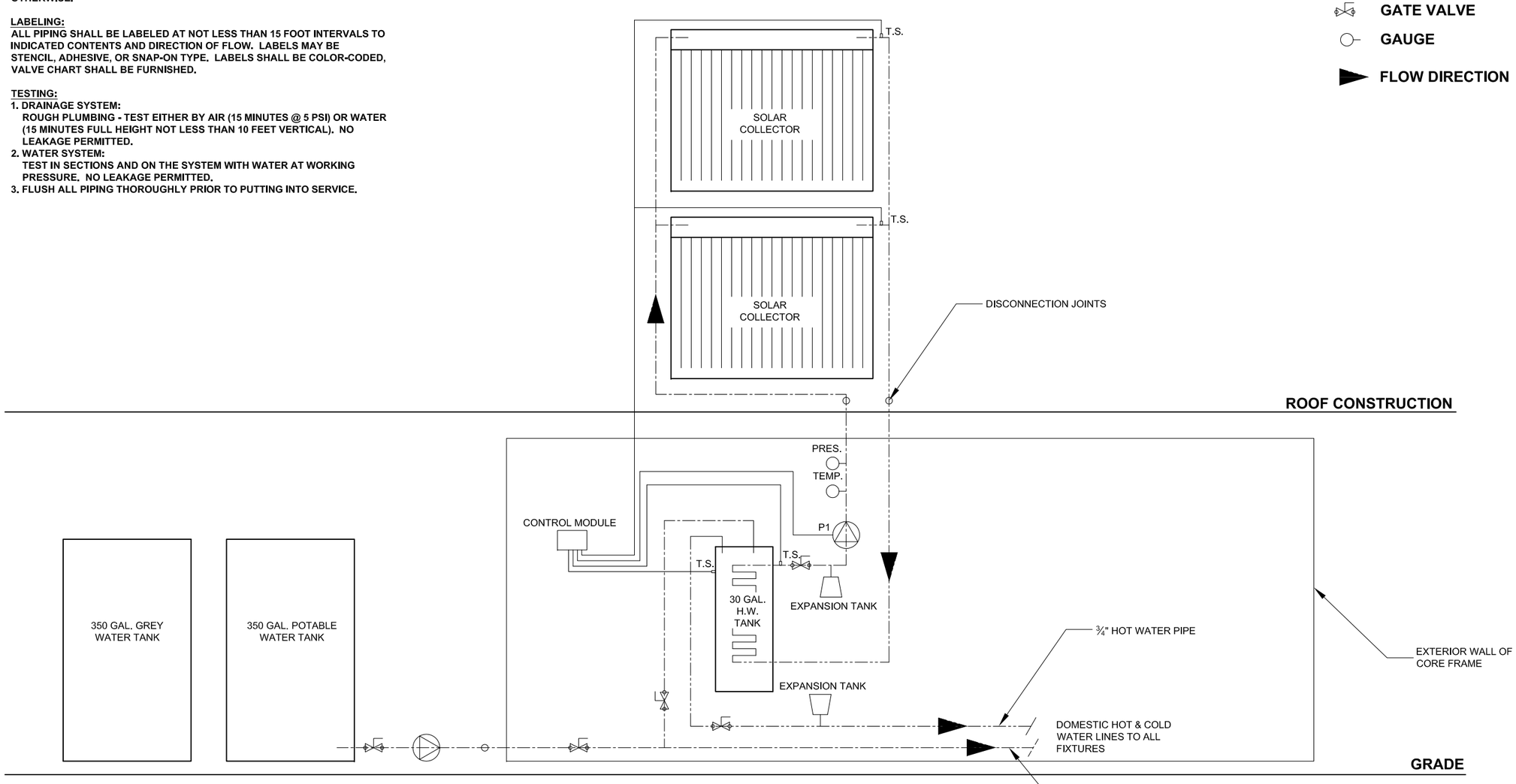

1 **SOLAR HOT WATER DIAGRAM**
SCALE: n.t.s.

OPEN House

New York Institute of Technology
NORTHERN BLVD., OLD WESTBURY, NY 11568
TEL: 516-686-7659 FAX: 516-686-7921

Solar Decathlon 2007

CONSTRUCTION DOCUMENTS

TITLE: **SOLAR HOT WATER DIAGRAM**

Scale: NOT TO SCALE
Date: August 7th, 2007
Drawn By: MAF
Checked By: MM

REVISIONS

No.	Date:	Description:
1	06.13.06	Design Development Drawings
2	03.06.07	Construction Drawings Rev. 1
3	08.07.07	Construction Drawings Rev. 2

DRAWING:

P 1.1

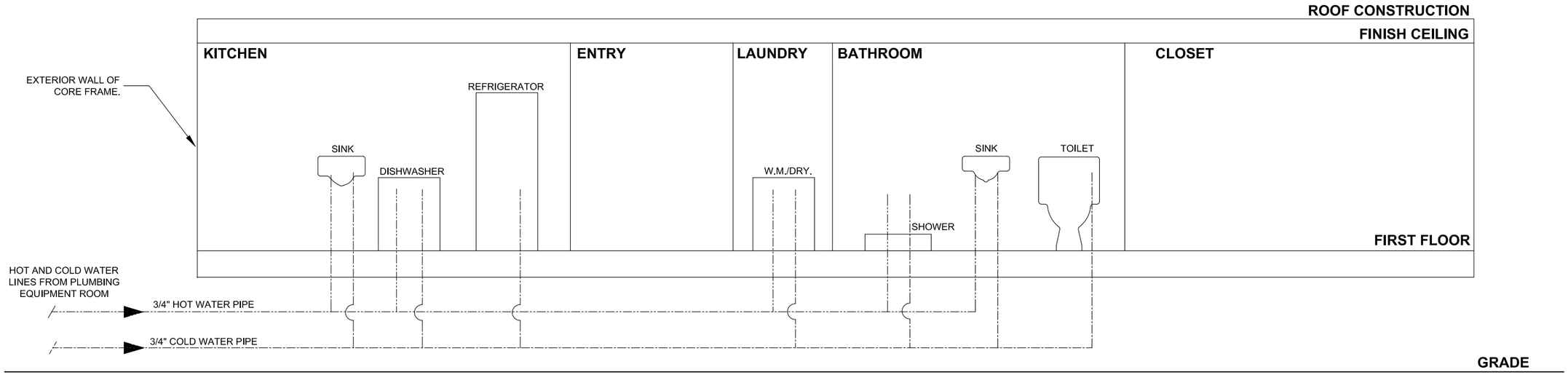

1 DOMESTIC WATER DIAGRAM

SCALE: n.t.s.

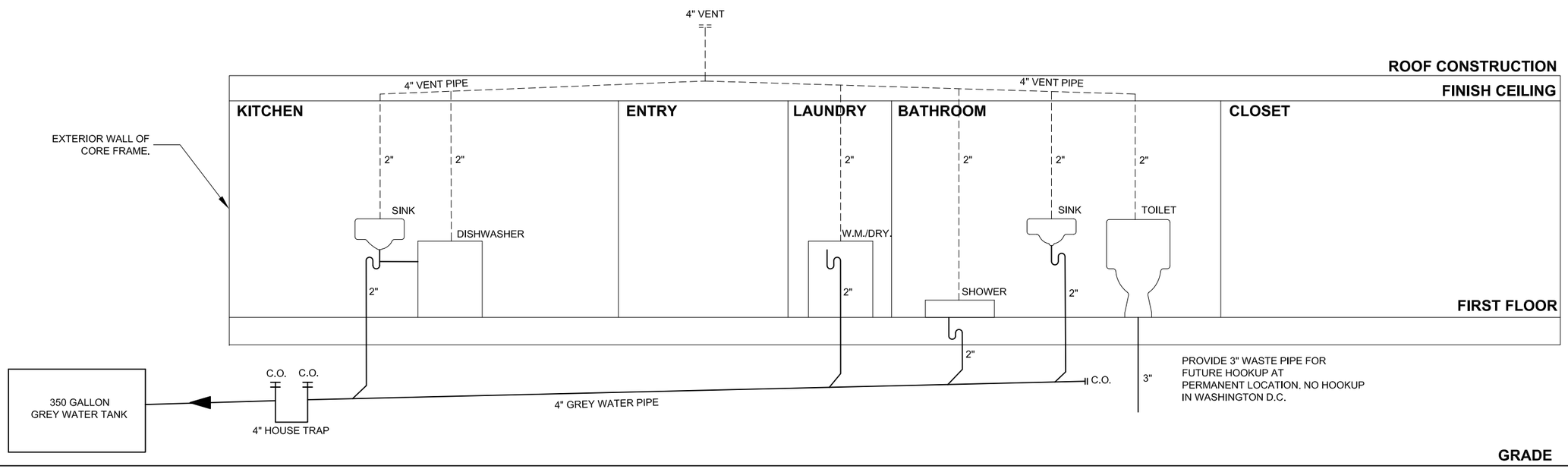

2 GREY WATER RISER DIAGRAM

SCALE: n.t.s.

OPEN House

New York Institute of Technology
NORTHERN BLVD., OLD WESTBURY, NY 11568
TEL: 516-686-7659 FAX: 516-686-7921

Solar Decathlon 2007

CONSTRUCTION DOCUMENTS

TITLE: **PLUMBING RISER DIAGRAMS**

Scale: NOT TO SCALE

Date: August 7th, 2007

Drawn By: MAF

Checked By: MM

REVISIONS

No.	Date:	Description:
1	06.13.06	Design Development Drawings
2	03.06.07	Construction Drawings Rev. 1
3	08.07.07	Construction Drawings Rev. 2

DRAWING:

P 1.2

SHEET: 61 of 66

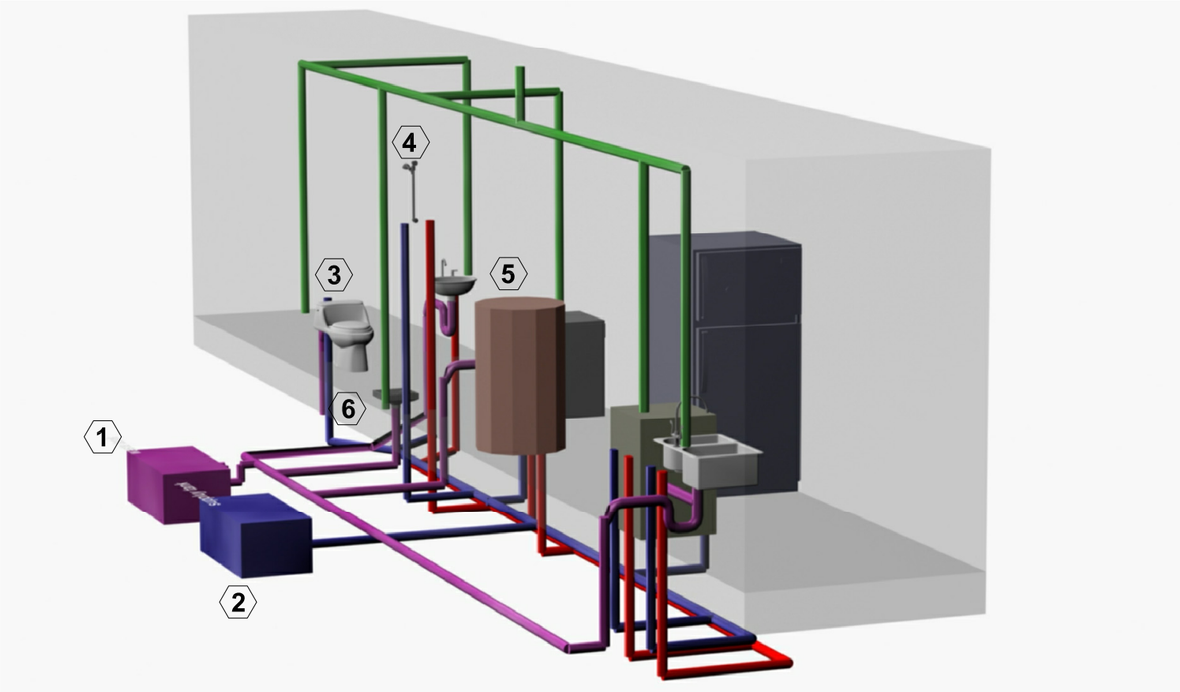

PLUMBING LEGEND

- COLD WATER SUPPLY PIPE
- VENT PIPE
- WASTE PIPE
- HOT WATER SUPPLY PIPE

1. 350 GAL. GREY WATER TANK
2. 350 GAL. POTABLE WATER TANK
3. TOILET
4. SHOWER HEAD/OUTLET
5. 30 GAL. HOT WATER STORAGE TANK
6. SHOWER DRAIN
7. KITCHEN SINK
8. DISHWASHER
9. REFRIGERATOR
10. COMBINATION WASHER/DRYER
11. BATHROOM SINK

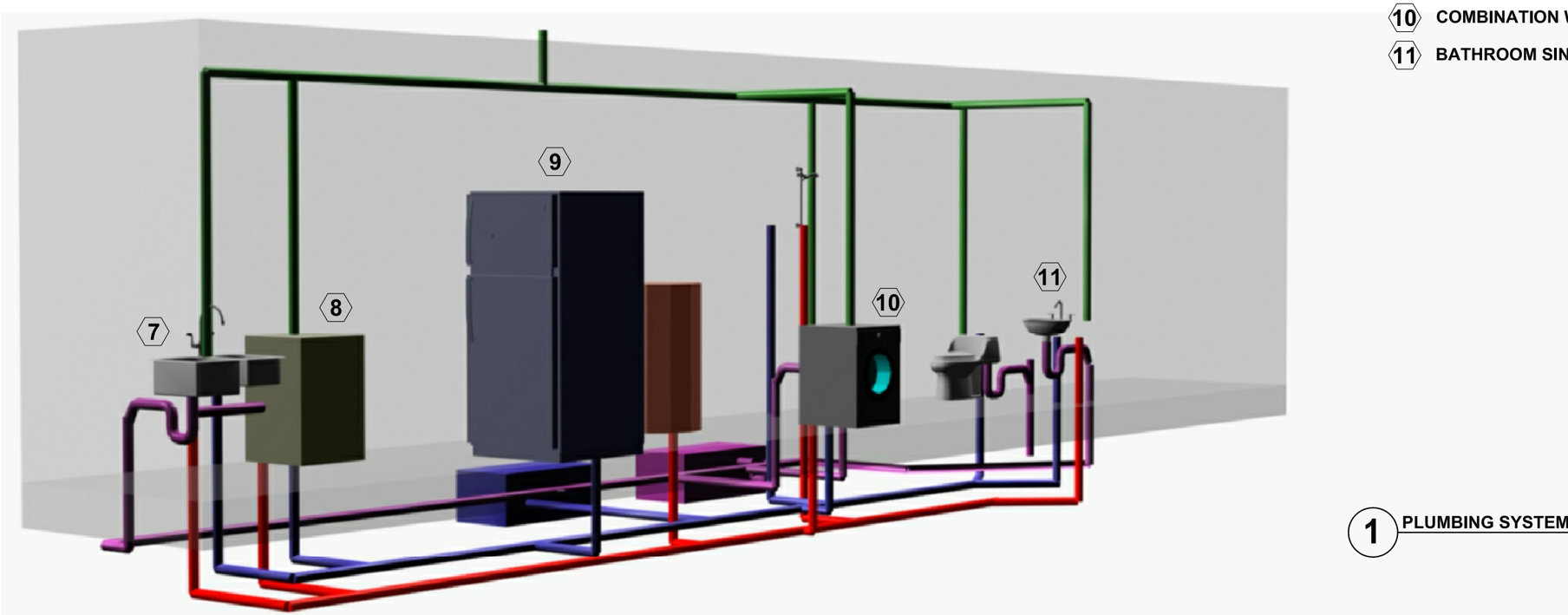

1 PLUMBING SYSTEM DIAGRAMS
SCALE: n.t.s.

OPEN House

New York Institute of Technology
NORTHERN BLVD., OLD WESTBURY, NY 11568
TEL: 516-686-7659 FAX: 516-686-7921

Solar Decathlon 2007

CONSTRUCTION DOCUMENTS

TITLE: PLUMBING SYSTEM DIAGRAMS

Scale: NOT TO SCALE

Date: August 7th, 2007

Drawn By: MAF

Checked By: MM

REVISIONS

No.	Date:	Description:
1	06.13.06	Design Development Drawings
2	03.06.07	Construction Drawings Rev. 1
3	08.07.07	Construction Drawings Rev. 2

DRAWING:

P 1.3

SHEET: 62 of 66

NOTE: DO NOT CONNECT WATER SUPPLY LINE IN WASHINGTON D.C. SUPPLY LINE TO BE PROVIDED FOR HOOKUP AT FUTURE SITE.

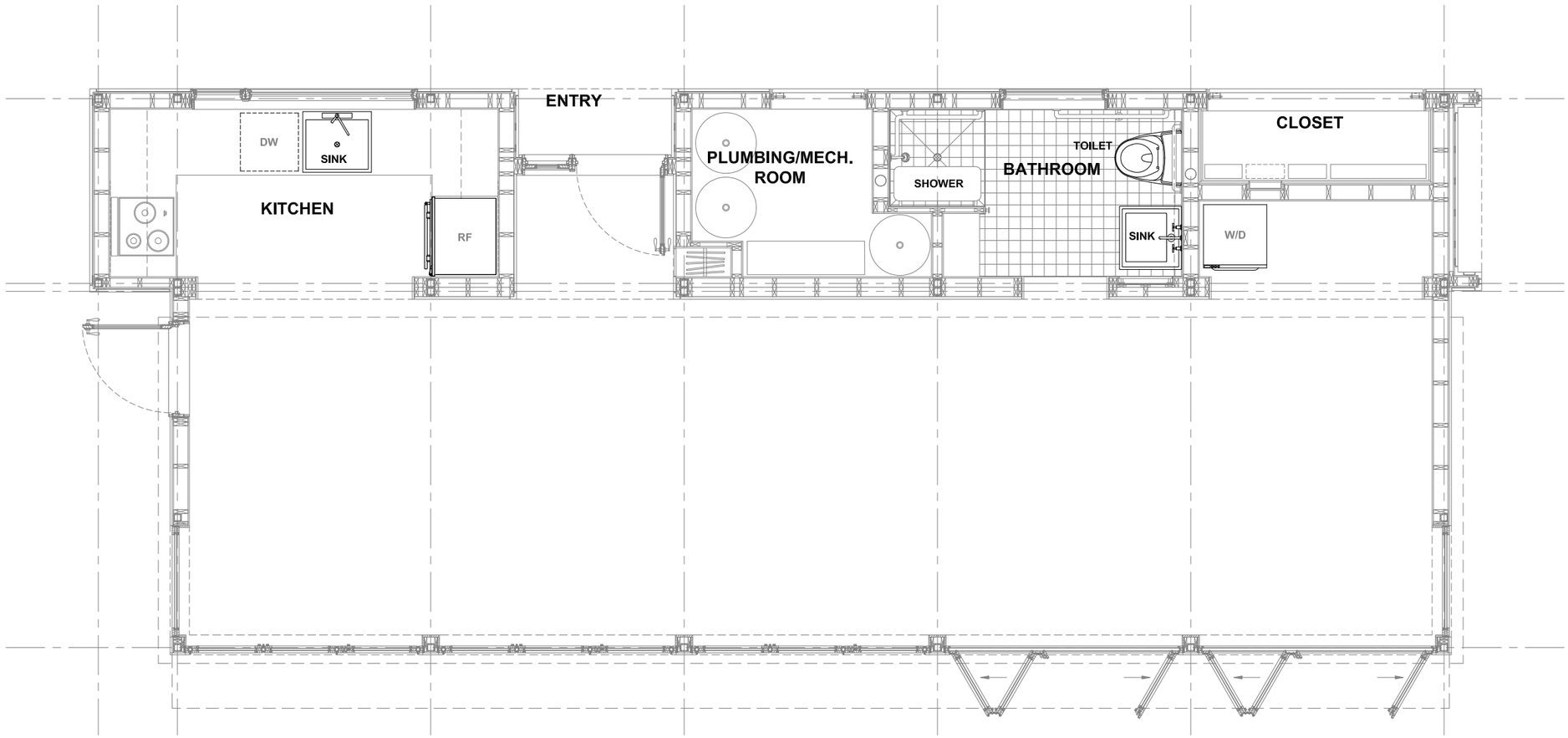

1 **PLUMBING PLAN**
SCALE: ¼" = 1'-0"

OPEN House

New York Institute of Technology
NORTHERN BLVD., OLD WESTBURY, NY 11568
TEL: 516-686-7659 FAX: 516-686-7921

Solar Decathlon 2007

CONSTRUCTION DOCUMENTS

TITLE: **PLUMBING FIXTURE PLAN**

Scale: ¼" = 1'-0"

Date: August 7th, 2007

Drawn By: MAF

Checked By: MM

REVISIONS

No.	Date:	Description:
1	06.13.06	Design Development Drawings
2	03.06.07	Construction Drawings Rev. 1
3	08.07.07	Construction Drawings Rev. 2

DRAWING:

P 1.4

SHEET: 63 of 66

Control Points		
Item	Label	Notes
1	Pump 1	Supply Water: Flojet 2840-010
2	Pump 2	Evac Tubes: Taco 007
3	Pump 3	HP Source Side: QT Flow
4	Pump 4	HP Load Side: Grundfos UP26-99
5	Pump 6	Hot Tank Circulator: Taco 0011
6	Pump 7	CHW Tank Circulator: Taco 0011
7	HP: Compressor	
8	HP: Reversing Valve	
9	HP: DSH Circuit Pump 5	
10	ERV	EV-130 On Timer - 50%
11	Valves 1,9	Zone Valve - Honeywell V8043
12	Valves 27,28	Zone Valve - Honeywell V8043
13	Valves 25,26	Zone Valve - Honeywell V8043
14	Valves 5,13	Zone Valve - Honeywell V8043
15	Valves 33,34	Zone Valve - Honeywell V8043
16	Valves 31,32	Zone Valve - Honeywell V8043
17	Valves 17,18	Zone Valve - Honeywell V8043
18	Valves 23,24	Zone Valve - Honeywell V8043
19	Valves 29,30	Zone Valve - Honeywell V8043
20	Valve 36	3 Way Valve
21	Valve 37,38	Zone Valve - Honeywell V8043
22	Valve 2	HW Coil Modulation:
23	Valve 10	CHW Coil Modulation:

Heat Pump: Valve and Pump Schedule				
Location	Mode	Valves Open	Pump	Control Detail
Source Side	Roof Pond (both heating and cooling)	17,18	3	If storage tank temps are satisfied
	Hot Tank (sink for cooling mode)	23,24	3	Until tank temp > 90°F
	Cold Tank (source for heating mode)	29,30	3	Until tank temp < 40°F
Load Side	Heating: Heat pump direct to hot water coil	1,9	4	If space heat tank < 90°F
	Heating: Storage tank to hot water coil	27,28	6	If space heat tank > 90°F
	Heating: Charge hot tank from heat pump	25,26	4	
	Cooling: Heat pump direct to chilled water coil	5,13	4	If chilled water storage temp > 50°F
	Cooling: Storage tank to chilled water coil	33,34	7	If chilled water storage temp < 50°F
	Cooling: Charge chilled water tank from heat pump	31,32	4	
	Heating or Cooling	2 or 10	6 or 7	Modulates coil temperatures when thermal storage is used
	DHW: Desuperheater output from heat pump	-	5	If DHW tank temp < 120°F

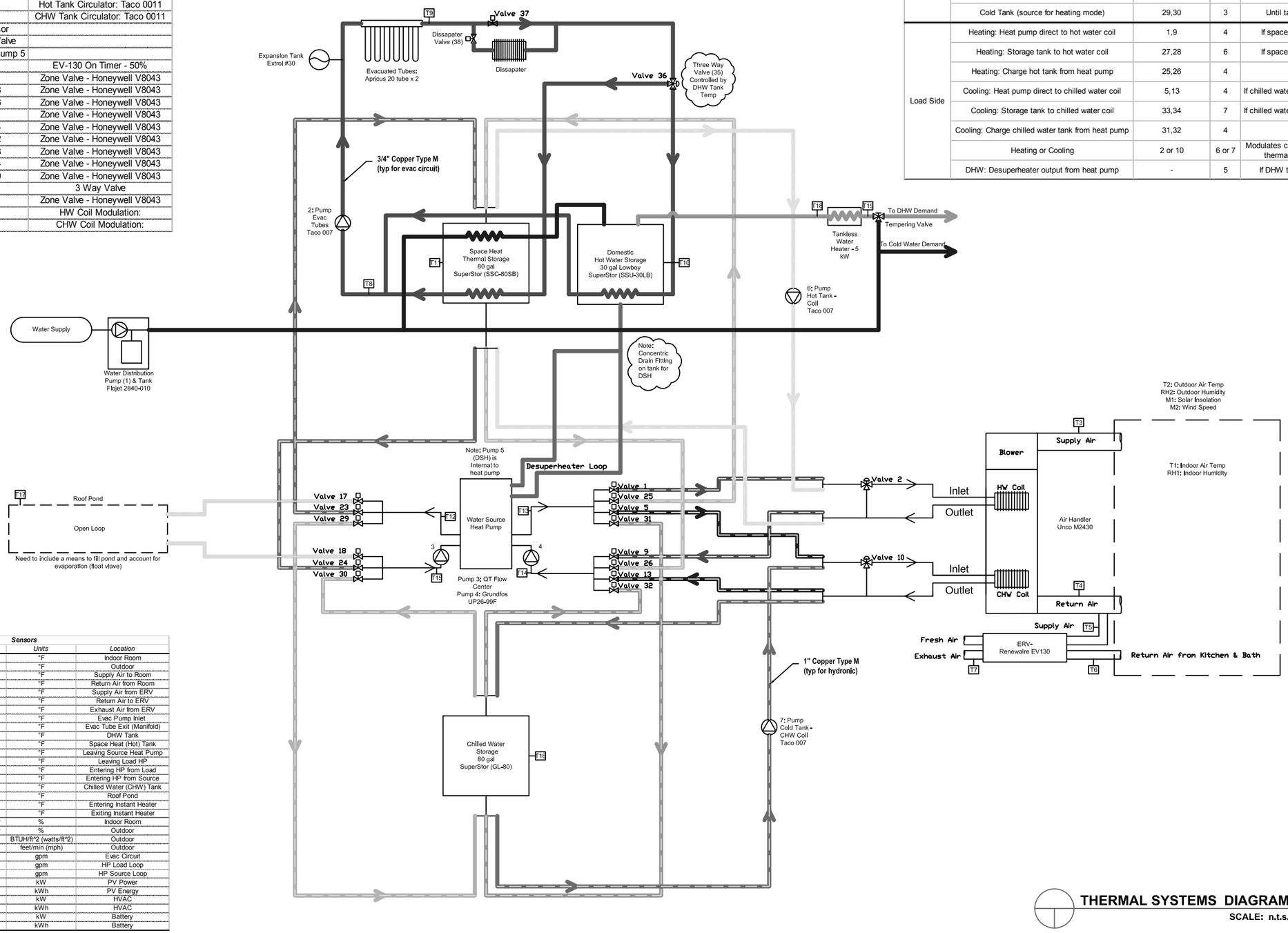

Sensors				
Item	Label	Type	Units	Location
1	T1	Temperature	°F	Indoor Room
2	T2	Temperature	°F	Outdoor
3	T3	Temperature	°F	Supply Air to Room
4	T4	Temperature	°F	Return Air from Room
5	T5	Temperature	°F	Supply Air from ERV
6	T6	Temperature	°F	Return Air to ERV
7	T7	Temperature	°F	Exhaust Air from ERV
8	T8	Temperature	°F	Evac Pump Inlet
9	T9	Temperature	°F	Evac Tube Exit (Manifold)
10	T10	Temperature	°F	DHW Tank
11	T11	Temperature	°F	Space Heat (Hot) Tank
12	T12	Temperature	°F	Leaving Source Heat Pump
13	T13	Temperature	°F	Leaving Load HP
14	T14	Temperature	°F	Entering HP from Load
15	T15	Temperature	°F	Entering HP from Source
16	T16	Temperature	°F	Chilled Water (CHW) Tank
17	T17	Temperature	°F	Roof Pond
18	T18	Temperature	°F	Entering Instant Heater
19	T19	Temperature	°F	Exiting Instant Heater
20	RH1	Relative Humidity	%	Indoor Room
21	RH2	Relative Humidity	%	Outdoor
22	M1	Solar Insolation	BTUH/ft^2 (watts/ft^2)	Outdoor
23	M2	Wind Speed	feet/min (mph)	Outdoor
24	M3	Flow	gpm	Evac Circuit
25	M4	Flow	gpm	HP Load Loop
26	M5	Flow	gpm	HP Source Loop
27	M6	Power	kW	PV Power
28	M7	Energy	kWh	PV Energy
29	M8	Power	kW	HVAC
30	M9	Energy	kWh	HVAC
31	M10	Power	kW	Battery
32	M11	Energy	kWh	Battery

THERMAL SYSTEMS DIAGRAM

SCALE: n.t.s.

OPEN House

New York Institute of Technology
NORTHERN BLVD., OLD WESTBURY, NY 11568
TEL: 516-686-7659 FAX: 516-686-7921

Solar Decathlon 2007

CONSTRUCTION DOCUMENTS

TITLE: THERMAL SYSTEMS DIAGRAM

Scale: NOT TO SCALE

Date: August 7th, 2007

Drawn By: DJR

Checked By: MM

REVISIONS

No.	Date:	Description:
1	06.13.06	Design Development Drawings
2	03.06.07	Construction Drawings Rev. 1
3	08.07.07	Construction Drawings Rev. 2

DRAWING:

M 1.1

SHEET: 64 of 66

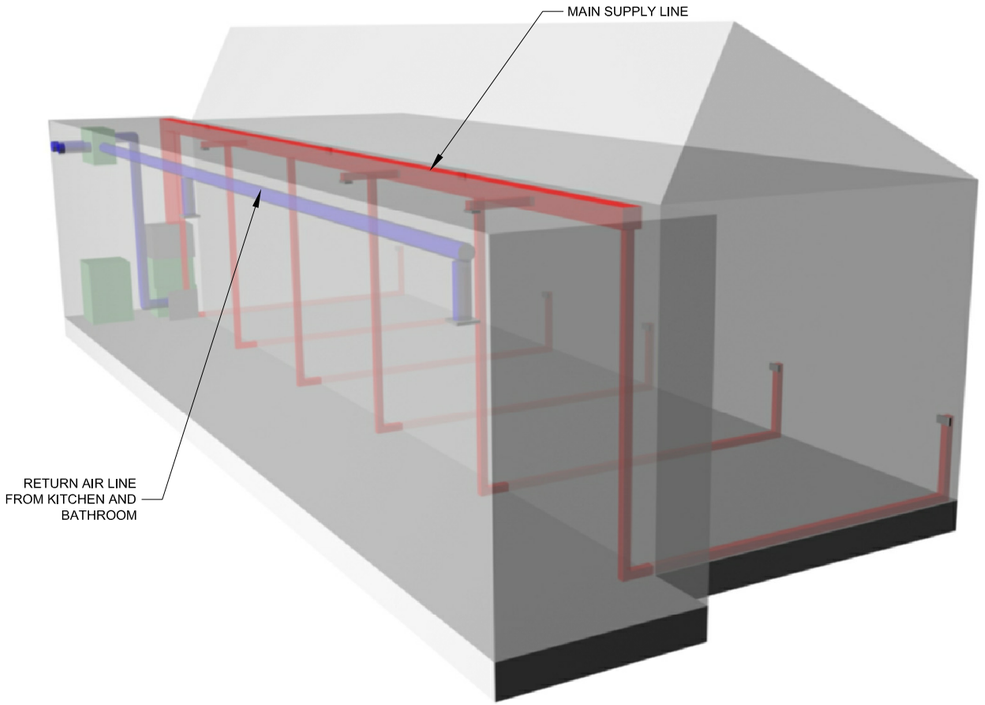

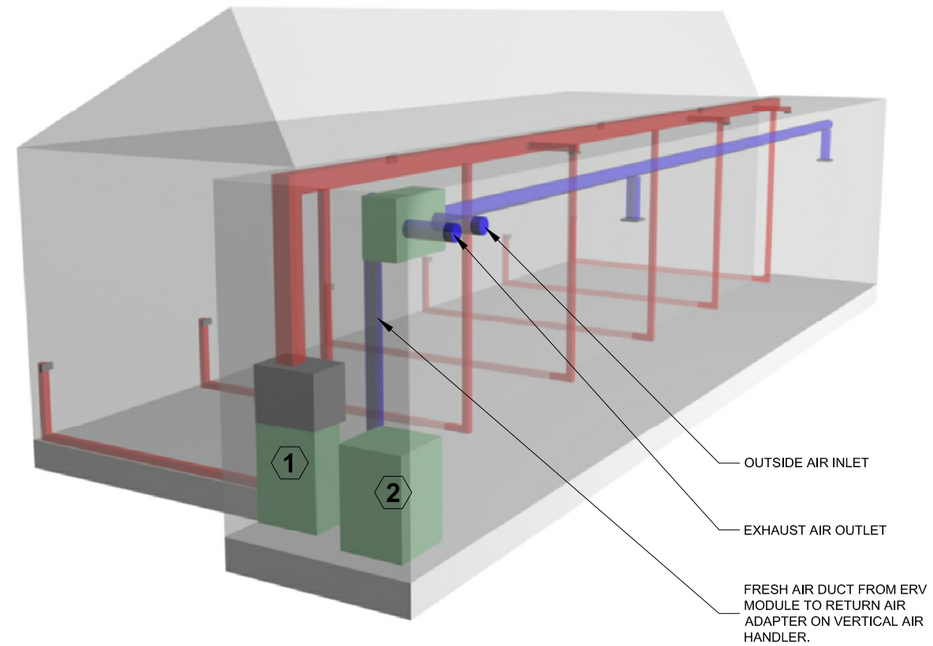

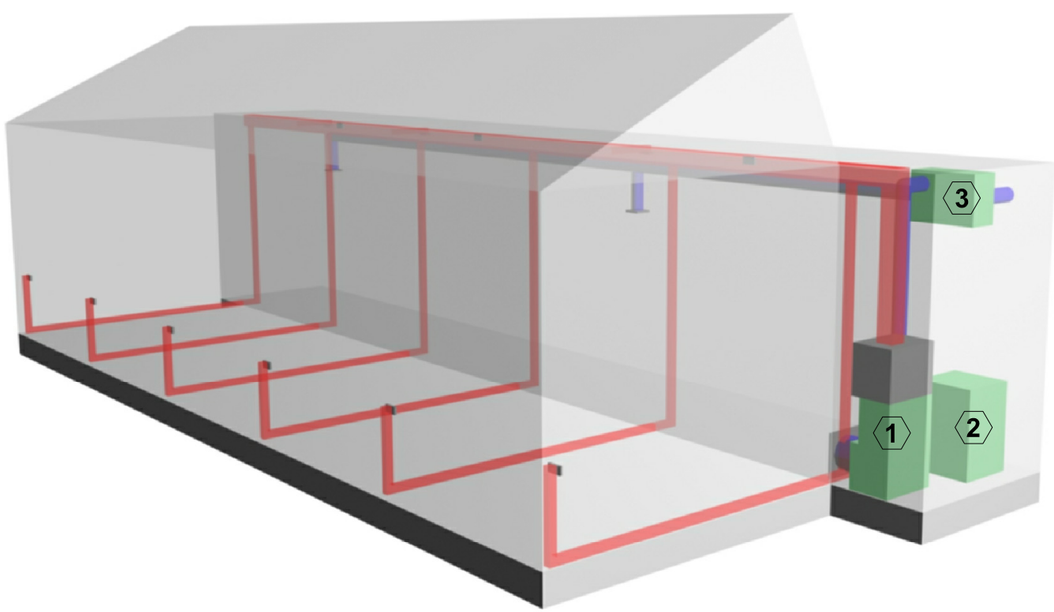

HVAC LEGEND

PLENUM SUPPLY DUCT

PLENUM RETURN DUCT

1 VERTICAL MODULAR AIR HANDLER
- -BLOWER UNIT
- -VERTICAL SPACER
- -CHILLED WATER MODULE
- -VERTICAL RETURN PLENUM

2 COMPRESSOR

3 ERV MODULE

1 HVAC DISTRIBUTION DIAGRAM

SCALE: n.t.s.

OPEN House

New York Institute of Technology
NORTHERN BLVD., OLD WESTBURY, NY 11568
TEL: 516-686-7659 FAX: 516-686-7921

Solar Decathlon 2007

CONSTRUCTION DOCUMENTS

TITLE: HVAC DISTRIBUTION DIAGRAMS

Scale: NOT TO SCALE

Date: August 7th, 2007

Drawn By: MAF

Checked By: MM

REVISIONS

No.	Date:	Description:
1	06.13.06	Design Development Drawings
2	03.06.07	Construction Drawings Rev. 1
3	08.07.07	Construction Drawings Rev. 2

DRAWING:

M 1.2

SHEET: 65 of 66

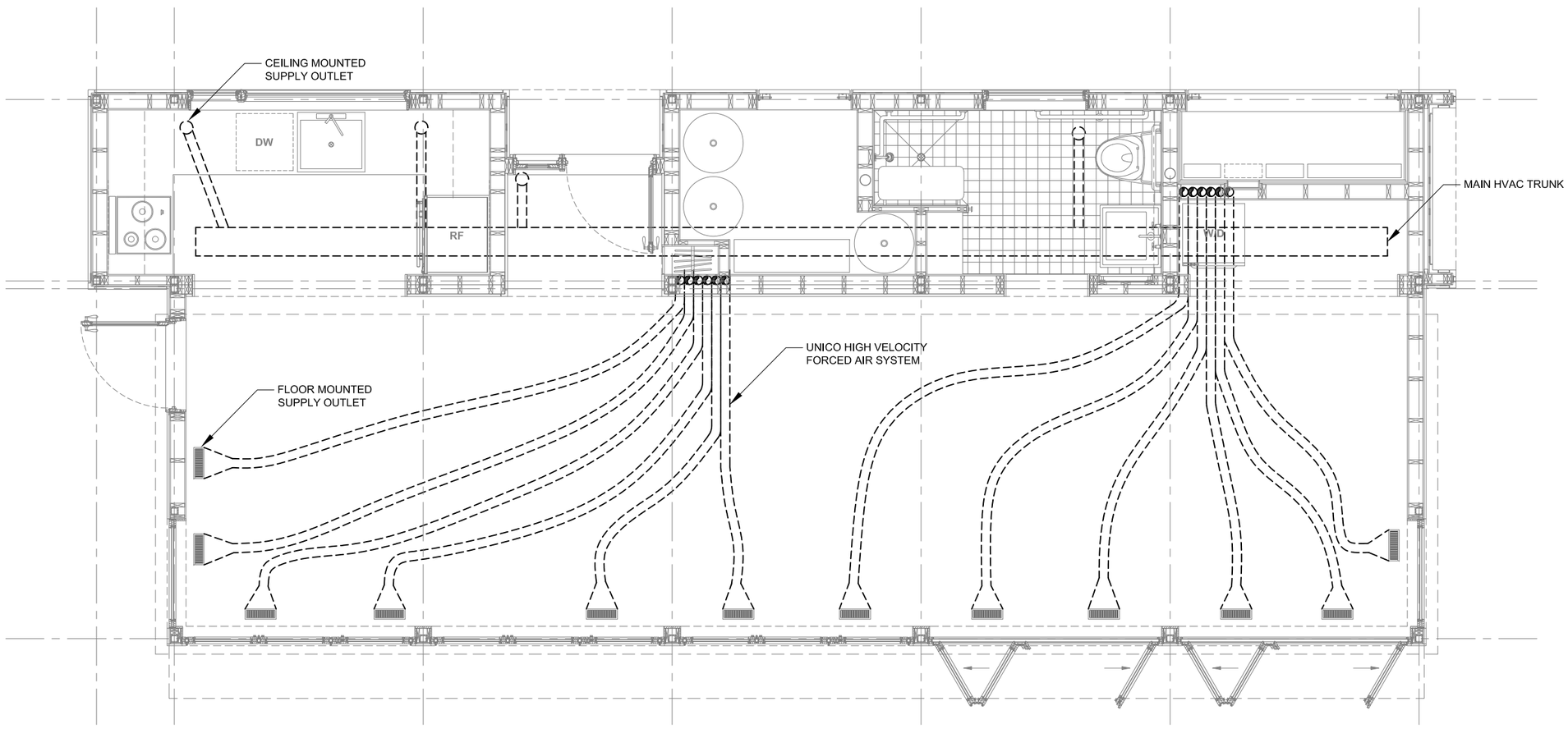

MECHANICAL PLAN
SCALE 1/4" = 1'- 0"

0 2' 4' 8'

OPEN House

New York Institute of Technology
NORTHERN BLVD., OLD WESTBURY, NY 11568
TEL: 516-686-7659 FAX: 516-686-7921

Solar Decathlon 2007

CONSTRUCTION DOCUMENTS

TITLE: **MECHANICAL PLAN**

Scale: 1/4" = 1'-0"
Date: August 7th, 2007
Drawn By: MAF
Checked By: MM

REVISIONS

No.	Date:	Description:
1	06.13.06	Design Development Drawings
2	03.06.07	Construction Drawings Rev. 1
3	08.07.07	Construction Drawings Rev. 2

DRAWING:

M 1.3

SHEET: 66 of 66